1221498

DOE/RL-93-73
Rev. 2

300 Area Process Trenches Modified Closure/ Postclosure Plan

RECEIVED
SEP 09 2013
EDMC

United States
Department of Energy
Richland, Washington

D-3-1

TRADEMARK DISCLAIMER

Reference herein to any specific commercial product, process, or service by trade name, trademark, manufacturer, or otherwise, does not necessarily constitute or imply its endorsement, recommendation, or favoring by the United States Government or any agency thereof or its contractors or subcontractors.

This report has been reproduced from the best available copy. Available in paper copy and microfiche.

Available to the U.S. Department of Energy
and its contractors from
Office of Scientific and Technical Information
P.O. Box 62
Oak Ridge, TN 37831
(615) 576-8401

Available to the public from the U.S. Department of Commerce
National Technical Information Service
5285 Port Royal Road
Springfield, VA 22161
(703) 487-4650

Printed in the United States of America

DISCLM-5.CHP (8-91)

DOE/RL-93-73

Rev. 2

300 Area Process Trenches Modified Closure/Postclosure Plan

Date Published
September 1997

United States
Department of Energy
P.O. Box 550
Richland, Washington 99352

CONTENTS

ADDENDUM ADD-1

EXECUTIVE SUMMARY ES-1

1.0 INTRODUCTION 1-1

2.0 UNIT DESCRIPTION 2-1

3.0 PROCESS INFORMATION 3-1

4.0 WASTE CHARACTERISTICS 4-1

5.0 GROUNDWATER MONITORING 5-1

6.0 CLOSURE STRATEGY AND PERFORMANCE STANDARDS 6-1

7.0 CLOSURE ACTIVITIES 7-1

8.0 POSTCLOSURE PLAN 8-1

9.0 REFERENCES 9-1

APPENDICES:

2A PHOTOGRAPHS . . . . . APP 2A-I

5A GROUNDWATER REFERENCES . . . . . APP 5A-I

7A SAMPLING AND ANALYSIS PLAN [REMOVED] . . . . . APP 7A-I

7B ANALYTICAL DATA AND VALIDATION PACKAGE FOR THE 300 AREA PROCESS TRENCHES [RESERVED] . . . . . APP 7B-I

7C TRAINING COURSE DESCRIPTIONS . . . . . APP 7C-I

7D SUMMARY OF PRE-AND POST-EXPEDITED RESPONSE ACTION ANALYTICAL DATA . . . . . APP 7D-I

ADDENDUM

300-FF-1 PROPOSED PLAN DISCUSSIONS AND EFFECTS ON THE 300-FF-1 PHASE III FEASIBILITY STUDY AND 300 AREA PROCESS TRENCHES MODIFIED CLOSURE/POSTCLOSURE PLAN

INTRODUCTION

The purpose of this addendum is to document the discussions and present the data and evaluations that have been developed after submittal of the 300-FF-1 Phase III Feasibility Study (FS) to the regulatory agencies for review. A number of issues were raised by the regulatory agencies that have been addressed over the past several months. Discussions of issues between the U.S. Environmental Protection Agency (EPA), the Washington State Department of Ecology (Ecology), and the U.S. Department of Energy (DOE) resulted in additional technical reviews of analytical data and site conditions that, in some cases, enhance or modify certain aspects within the 300-FF-1 Phase III FS and the 300 Area Process Trenches (300 APT) Modified Closure/Postclosure Plan. Rather than completely revise each document, this addendum is included which summarizes the discussions, data review, evaluations, and technical changes made. It supersedes related discussions in both documents and by inclusion in these documents is made part of the 300-FF-1, 300-FF-5, and 300 Area APT Administrative Records.

A listing of topics the addendum addresses is discussed in the next paragraph. The first item on that list is very important and warrants discussion in the introduction. A key conclusion resulting from using data collected prior to the Remedial Investigation (RI)/FS is that several chemical constituents are identified above regulatory standards for the 300 APT. The text in the 300 APT Modified Closure/Post Closure Plan currently indicates no chemical constituents are above *Model Toxics Control Act* (MTCA) Level C Industrial Soil Cleanup Values. This results in a substantial change to the conclusions made within the closure plan. Exceedance of this regulatory standard is a new regulatory driver to take cleanup action in the 300 APT in addition to the previously documented uranium risk driver. There were no changes to conclusions in the 300-FF-1 Phase III FS risk assessment using the older data. The magnitude of this change suggests that it is very important for reviewers to read this addendum as it supersedes some analyses in both the 300-FF-1 Phase III FS and the 300 APT Modified Closure/Postclosure Plan.

The key areas addressed in the addendum are (1) change in use of (SW-846) data collected prior to *Comprehensive Environmental Response, Compensation, and Liability Act* (CERCLA) characterization activities, (2) evaluation and use of additional cobalt-60 data from the South Process Pond, (3) development of a uranium cleanup standard, (4) evaluation of a cost-efficient technique to meet MTCA C Industrial Soil Cleanup Values, (5) review of volume and cost estimates, (6) revision of remedial alternatives, and (7) establishing proposed preferred remedial alternatives.

Another topic that merits a brief discussion here is the combining of the 300-FF-1 and 300-FF-5 Operable Units Proposed Plans. During review of the separate 300-FF-1 and 300-FF-5 Proposed Plans, the regulators determined that the documents should be combined to create a more integrated approach. Therefore, the proposed plan has been written to combine information from both operable units. Once the Public Comment Period is completed, the remedial alternatives for both operable units and the 300 APT will be presented in the Record of Decision. In addition, 300 APT-specific permit conditions will be administratively incorporated into the site-wide permit.

CHANGE IN USE OF SW-846 ANALYTICAL DATA IN DECISION MAKING

Investigation of several 300 Area sites began prior to the 300 Area being listed on the National Priorities List in 1989. Two separate sampling events were conducted in the mid-1980's: one for the 300 APT and one for the North and South Process Ponds. Samples were analyzed to SW-846 protocols. Analytical results were reported in Zimmerman and Kossick (1987) and Dennison et al. (1989) for the 300 APT and North and South Process Ponds, respectively. For the 300-FF-1 Operable Unit, these reports were cited and used in conjunction with process knowledge and other data to scope the 300-FF-1 Phase 1 RI. At that time and throughout the entire 300-FF-1 RI/FS, this data was only used in that context with the understanding that validated Contract Laboratory Program (CLP) data would be collected and used for RI/FS decision making. The older data is specifically included in the 300-FF-1 Operable Unit work plan and reiterated in the 300-FF-1 Phase I RI report.

The regulators indicated strong preference to factor the SW-846 data into the decision-making data set. This request was honored; however, the quality of that data is not documented and is discussed below. However, there is no objective evidence that the data is invalid.

The CLP data results consistently indicate lower concentrations of contaminants and contradict the SW-846 data for some constituents. The MTCA regulations require that no single sample can be more than twice (2X) the cleanup standard. It should be noted that all of the constituents that were more than twice MTCA Method C levels were identified from the SW-846 data set except chrysene from a CLP sample which value was greater than twice MTCA Method C value. However, the validated data was qualified as an estimated value.

A summary of the data comparisons is provided in Table AD-1. A total of 630 samples were reviewed including both SW-846 and CLP data. The data indicate that eight samples were identified with six constituents above MTCA Method C Industrial Levels. The eight samples were collected at four different locations. Three of these sample locations were in the Process Trenches. The soils sampled were physically relocated to the north end of the trenches during an expedited response action conducted in 1991.

The 300 APT SW-846 data show 4 of 114 samples above MTCA Method C Industrial Soil Cleanup Values for arsenic, cadmium, thallium, and benzo(a)pyrene. The 300 APT Modified Closure/Postclosure Plan as written was based solely on CLP data that indicate no *Resource Conservation and Recovery Act* (RCRA) contaminants above MTCA Method C Industrial Soil Cleanup Values.

For the North and South Process Pond, the SW-846 data identified 1 of 70 samples above MTCA Method C for polychlorinated biphenyls (PCB). Analyses of these data indicate that the outcome of the risk assessment performed in the 300-FF-1 RI report would not change. However, remediation would be necessary to meet applicable or relevant and appropriate requirements.

COBALT-60 SAMPLING

Cobalt-60 sampling results during the RI/FS show that there is a present risk in the South Process Pond. The potential increase in cancer risks is 2×10^{-4} due to external exposure. The risk is

determined from limited data. During evaluation and selection of the proposed preferred alternative, the questions arose of how much remediation should be completed based on cobalt-60.

Because the risk was driven by only one value, it was decided to conduct additional field screening to confirm the concentration of cobalt-60. The field screening data confirmed that the average concentrations were approximate 5.0 pCi/g, which is shown in the RI/FS. Figure AD-1 show that higher concentrations are limited to several hot spots. These hot spots coincide with uranium hot spots and will be removed when the uranium is removed.

The remaining low cobalt-60 concentrations will be left in place because cobalt-60 does not contribute to long-term dose. Cobalt-60 has a short 5.26-year half-life so concentrations will diminish by natural decay by the time cleanup is complete.

URANIUM CLEANUP STANDARD

The 300-FF-1 Phase III FS evaluated a range of dose-based cleanup levels from 3 to 25 mrem/year. The Tri-Parties propose to use a cleanup standard for the 300-FF-1 Operable Unit of 15 mrem/year dose to an industrial worker based on the radiation site cleanup standards in 40 CFR 196 (proposed). To be able to implement cleanup in the field, the 15 mrem/year dose limit had to be converted to a uranium concentration. The first step of this process was to establish a reasonable exposure scenario. An industrial land-use scenario had been previously agreed upon. Industrial scenario exposure pathways and durations believed to represent the scenario in a conservative but realistic manner were then determined. The worst-case industrial scenario that is thought to be possible is a worker spending 1,500 hours/year in a building on a waste site and 500 hours outside a building on a waste site. The RESRAD[1] model was the software tool used to calculate exposure levels under the agreed-upon scenario. A soil concentration of 350 pCi/g total uranium corresponds to a 15 mrem/year dose based exposure under the 300-FF-1 industrial scenario.

A review of the 300-FF-1 Phase III FS Appendix F was performed to understand the difference between the dose-based radionuclide concentrations reported in that document versus those developed and used for the proposed cleanup standard described above. The difference is the inclusion of cobalt-60 in the Appendix F calculations and applying the highest concentration from the South Process Pond to all of the waste sites. This has the effect of lowering the allowable concentration of uranium in the soils. Cobalt-60 is present in small concentrations in the North Process Pond and Process Trenches and not in the burial grounds at all. Cobalt-60 contributes to short-term dose only in the South Process Pond. In fact, the 300-FF-1 FS III Appendix F looked at the dose contributions from multiple radionuclides using site-specific data including the uranium isotopes, cobalt-60, cesium-137, and zinc-65, all which are insignificant dose contributors except the uranium. The RESRAD run described above used to develop a cleanup standard only included uranium in the model. The rationale for this decision is described below.

Cobalt-60 has a short half-life of 5.26 years, meaning that it will naturally decay to below cleanup concentration levels fairly quickly. In fact, the data indicates that the average cobalt-60 current concentration is about 5 pCi/g as discussed earlier in the addendum. This level of cobalt-60 will decay naturally to a level of insignificant dose contribution by the time cleanup of the operable unit is completed. Cobalt-60 accounted for a large percentage of the 15 mrem/year in the short term, thus

[1]RESRAD is a pathway analysis computer code used to calculate radiation doses to individuals.

forcing a lower allowable concentration of uranium. No other radionuclides contribute significantly to the total dose.

DATA CORRELATION SUPPORTING EFFICIENT CLEANUP

Part of the discussions between the Tri-Parties included developing a site-specific method to measure attainment of the MTCA Method C Industrial Soil-Based Cleanup Values during cleanup. It was suspected that there would be a high likelihood that a correlation could be made between the uranium cleanup standard discussed above and MTCA C Industrial Cleanup levels. If so, during cleanup when contaminated soil is removed based on the uranium cleanup standard, then all the chemical contaminants above MTCA C would also be removed. This would simplify field decisions based on uranium field screening analysis, thus reducing costs of remediation. Therefore, an evaluation of this potential was performed and is discussed in the following paragraphs.

First, data from all sample locations were evaluated to identify constituents above the MTCA Method C Industrial Soil Cleanup Values. The uranium concentrations at those locations were compared to the cleanup standard of 350 pCi/g. The data strongly conclude that uranium can be used as an indicator parameter for field screening. It can be further concluded that, when the uranium (350 pCi/g) is removed, all potential chemical contaminants will also be removed meeting the MTCA Method C Industrial Soil Cleanup Values. Analyzing for chemical constituents will be required only for final verification sampling.

A site-specific verification sampling and analysis plan will be developed during the remedial design. Final verification samples will be evaluated against the cleanup standard to show that (1) no more than 10% of the samples are above the cleanup standard (MTCA C Industrial Soil Cleanup Values and 350 pCi/g total uranium), (2) no one sample can be more than twice the cleanup standard, and (3) the 95% upper confidence level (UCL) is below the cleanup standard. Using MTCA cleanup attainment criteria [WAC 173-340-740(7)(e)(ii)] for uranium is site specific and is based in part on the ability to correlate the uranium cleanup standard with the chemical cleanup standards.

VOLUME AND COST ESTIMATES

Appendices H and I of the 300-FF-1 Phase III FS include volume and rough-order-of-magnitude (ROM) cost estimates for the various cleanup alternatives. The estimates are grouped into burial ground and process waste unit categories. The ROM estimates are accurate to plus 50%, minus 30%. The FS III volume and cost estimates have been changed, and new tables are attached to this addendum. The reasons for changes to these estimates are discussed in the following paragraphs.

Volume estimates were revised from (1) reevaluating RI data to help reduce uncertainty in the cost estimates and (2) regrouping of some waste units. Uncertainties in excavation and contaminated volume estimates result in uncertainties in the cost estimates. Some volume changes were made; the most significant change related to the Process Ponds berm and scrapings areas where no RI data exist. The landfill units were all included with the process waste units and are described later in the addendum.

Cost estimates were revised for a variety of reasons: (1) some unit rates were challenged by the regulators, (2) volume changes were made as discussed above, and (3) revision/refinement of some

alternatives was made. First, several of the unit rates applied in the FS III ROM cost estimates were reviewed and challenged. The entire cost estimate was reevaluated and new unit rates were applied. Some changes included unit rate changes for excavating, screening, hauling, and sampling and analysis as well as overhead adjustments. The Environmental Restoration Disposal Facility (ERDF) fixation or stabilization costs were removed from the estimate after the ERDF waste acceptance criteria had been updated and revised.

The volumes for each waste management unit were further refined after performing a more detailed evaluation of sample data. Also, the regrouping of waste sites affects apportioning of costs between the burial grounds and process waste units. In addition, some of the alternatives were revised, which affects the cost estimates. For example, one of the original FS alternatives allowed consolidation of the Process Trenches Spoils Pile into the North Process Pond followed by construction of a soil cover. It has been determined that the process trenches cannot be moved to any place but a RCRA- compliant disposal facility. This changed the consolidation volumes and associated costs. Tables AD-2 through AD-16 reflect the new volume and cost estimates. The table format is the same as used in Appendices H and I in the 300-FF-1 Phase III Feasibility Study.

REVISED REMEDIAL ALTERNATIVES

The actions for several alternatives are being revised. These changes have been made because new information has become available or because discussions between the Tri-Parties have led to better solutions and better use of resources or to add consistency between 100 Area and 300 Area remediations. Several modifications, which revise the original alternatives, include the following:

- Landfills 1a, 1b, 1c, and 1d are being grouped to the process waste units. Landfills 1a, 1b, 1c, and 1d were originally grouped with the burial grounds in the RI/FS. However, after further evaluation, the landfills have been included with the process waste units because the remedy for the process waste units will also apply for the landfills. This is true for the following reasons. They are small in area and volume with respect to the burial grounds. Landfills 1b and 1d are co-located within part of the scraping disposal areas. Landfills 1a and 1c are near the river edge and the North Process Pond.

- The 618-5 Burial Ground is being transferred to the 300-FF-2 Operable Unit. The 300-FF-2 operable unit includes the remaining 300 Area burial grounds.

- The Process Spoils Piles will be excavated instead of placing a RCRA barrier over the piles. It was determined that for small areas (less than 10 acres) it was more cost effective to excavate than placing a RCRA barrier over the waste.

300-FF-1 PROCESS WASTE UNITS

Alternative P-1 - No Action

The No-Action alternative has not changed.

Alternative P-2a - Soil Cover

There is only one change to the P-2a Soil Cover option. The change is that the contamination in the Process Trenches Spoils Pile would be excavated instead of leaving in place with a RCRA barrier.

The objectives remain the same. This alternative limits the infiltration of surface water at process units and therefore, limits migration of contaminants through the soil to groundwater preventing contamination of the groundwater above preliminary remediation goals (PRGs). This alternative also provides protection from direct exposure to contaminants present in soils. This alternative contains all contamination in place.

The new alternative reads as follows:

> This alternative leaves soil contamination in place under a new 2-ft-thick vegetated silty soil cover to prevent direct exposure and inhalation and ingestion of contaminated soils. Soils contaminated above cleanup levels from the Process Trenches Spoils Pile would be excavated and disposed in ERDF or other RCRA Subtitle C compliant facility. Since uranium is long-lived, institutional controls would be required to maintain the 45-acre silty soil cover indefinitely. Other potential controls include fences, signs, and deed restrictions. Since remaining contamination is greater than cleanup standards, groundwater monitoring would be required.

Alternative P-2b - Consolidation and Soil Cover

This alternative remains the same, although now instead of using PRGs the cleanup levels in Table AD-17 are used. In the new alternative, the Process Spoils Pile will be excavated and disposed in ERDF.

The new alternative reads as follows:

> This alternative reduces the vegetated silty soil cover size required for the process waste sites as compared to alternative P-2a. This is implemented by excavating soil/debris above cleanup standards from Landfill 1a and 1b and the North Pond Scraping Disposal Area, and consolidating those materials into the North Process Pond. Excavated soil from the Process Sewers, Landfill 1d, and the South Process Pond Scraping Disposal Area would be consolidated in the same manner into the South Process Pond. Soils contaminated above cleanup levels from the Process Trenches Spoils Pile would be excavated and disposed in ERDF or other RCRA Subtitle C compliant facility. Since uranium is long-lived, institutional controls would be required to maintain the 14-acre silty soil cover indefinitely. Other potential controls include fences, signs, and deed restrictions. Groundwater monitoring would be required since contamination is left in place greater than cleanup levels.

Alternative P-3 - Selective Excavation and Disposal

The original P-3 Selective Excavation and Disposal alternative removes all contamination above PRGs. In the new alternative, the process waste units are now separated into three zones. The first zone contains soils above cleanup levels that would be excavated and disposed. The second zone soils are

below cleanup levels and would be left in place without a soil cover. The third zone sampling results are inconclusive, and field screening will be used to determine if soils will be disposed or left in place without a soil cover. The three zones are shown in Figure AD-2.

The new alternative reads:

> This alternative requires removal of contaminated soil/debris with concentrations above cleanup standards. The individual process waste units can be divided into three zones: areas where the data shows that the soil is above the cleanup standard, areas where the data shows the soil is below cleanup standards, and areas where the data is inconclusive. The locations of these three zones within the process waste units are shown on Figure AD-2. Under this alternative, soil would be removed from the areas where it is known that the soil is contaminated (above the cleanup standards) with little sampling and analysis except for confirming all contaminated soil had been removed. Areas that are already below the cleanup standard would be left in place. The areas where the data is inconclusive would require field analyses to determine if the soil was contaminated above the cleanup standards or not and therefore would be removed or not. Excavated soil and debris would be disposed of at ERDF or other regulated landfill. Present data indicate that once total uranium above the cleanup standard is removed, the average concentrations of total uranium and cobalt-60 will be such that the dose will not exceed 15 mrem/year. If verification sampling unexpectedly indicates that the 15 mrem/year cleanup level is exceeded, institutional controls may be used to allow the cobalt-60 to decay. No additional institutional controls would be required.

Alternative P-4 - Excavation, Soil Washing, and Fines Disposal

This alternative remains the same although now instead of using PRGs the clean up levels in Table AD-17 are used.

The new alternative reads:

> This alternative is similar to Alternative P-3, with the addition of soil washing to reduce the quantity of soil requiring disposal. Data from the 300 Area show that the contaminants are concentrated in the fines (silt and clay). The coarser soils (gravel and sand) are generally clean. Soil washing separates soil according to particle size, and therefore the soil with the concentrated contaminants could be separated from the clean soil. The concentrated soil would be disposed of in ERDF or other regulated landfill, and the soils within cleanup standards would be replaced. Verification sampling would also be required. No additional institutional controls would be required.

300-FF-1 BURIAL GROUNDS

As stated above the Landfills will be remediated with the process waste units and the 618-5 Burial Ground will be transferred and remediated as part of the 300-FF-2 Operable Unit.

Alternative B-1 - No Action

The No-Action alternative has not changed.

Alternative B-2 - Institutional Controls

There are no changes to the Institutional Controls Alternative. The new alternative reads:

> This alternative requires setting up and maintaining institutional controls above those currently in place. Institutional controls may include: deed and/or access restrictions; maintenance of the existing fences, signs, and existing soil covers; and groundwater monitoring to verify effectiveness of the existing soil cover. These controls and the soil cover would need to be maintained long enough for uranium to decay (millions of years).

Alternative B-3 - Consolidation and Surface Barrier and
Alternative B-4 - Selective Excavation and Disposal

These alternatives have been replaced with Alternative B-3: Excavation and Removal of Burial Ground 618-4 after reviewing data. Burial grounds have been difficult to characterize because of their complexity and limited documented history. The 300 Area burial grounds were investigated during the RI in the following way. Soil gas, surface radiation, and surface geophysics were used to locate two test pits. Test pits were excavated to collect samples. Sample data was used to determine risk numbers.

The 618-4 and 618-5 Burial Grounds have potential increased cancer risks of 1×10^{-4} and 3×10^{-5}, respectively. This is based on limited data from two test pits. Uranium contributes most of the risk, and the exposure routes are direct contact with contaminated soil, external radiation, and inhalation and ingestion of contaminated soils or debris. While the risk estimate for the 618-4 Burial Ground is technically within EPA's target risk range, it is at the upper limit of that range. This fact, along with the uncertainties in the representativeness of the data and the risk assessment, has led EPA, Ecology, and DOE to conclude that remedial action should be taken.

The action should be a phased approach. Therefore, one burial ground (618-4) is proposed to be excavated and one burial ground (618-5) will be further evaluated as part of 300-FF-2, which contains the rest of the burial grounds for the 300 Area. The information and experience gained from 618-4 will be used to develop remedial alternatives for the 618-5 Burial Ground. Landfills 1a, 1b, 1c, and 1d, which were originally in the burial ground alternatives have been grouped with the process waste unit alternatives as discussed above.

This alternative does not require a new detailed analysis because it is essentially the same as the previous B-4 selective excavation and disposal alternative. The difference is only one of the two major burial grounds is addressed. Therefore, the only evaluation criteria that changes is cost.

The new alternative reads:

> The 618-4 Burial Ground would be remediated through excavation and disposal of materials greater than cleanup levels. Contaminated soil and debris would be disposed of in ERDF or other regulated landfill. Any material that exceeds the disposal facility

acceptance criteria would be stored onsite consistent with requirements until treated to meet acceptance criteria or a treatability variance is approved. Verification sampling shall also be required. No additional institutional controls or post-cleanup monitoring are required for this alternative.

CONCLUSIONS

The 300-FF-1 Proposed Plan issue resolution resulted in changes that keep resources focused on remediation and risk-reduction activities and enhance the cleanup strategy for the 300-FF-1 Operable Unit. Combining the 300-FF-1 and 300-FF-5 Proposed Plans into one document further integrates the 300 Area source and groundwater operable units and will facilitate public review.

Proposed preferred alternatives for the process waste units and burial grounds are presented in the proposed plan. All of the revised remedial alternatives generally enhance or optimize concepts already presented in 300-FF-1 Phase III FS. It is recognized that implementation of the burial ground preferred alternative will provide greatly needed data to facilitate characterization and remediation decisions on future burial grounds.

Data collected in the 300 APT and process ponds prior to the CERCLA RI/FS were evaluated for impacts to the 300-FF-1 risk assessment and ARARs criteria. The risk assessment conclusions for the 300 APT and process ponds did not change. However, there are several constituents that were over twice the MTCA C Industrial Soil Cleanup Values in the 300 APT that were not included in the 300-FF-1 ARARs analysis and not factored into the 300 APT Closure Plan earlier. In addition, a uranium cleanup standard of 350 pCi/g was developed. New cobalt-60 data was factored into cleanup standard decision-making. A review of old and new data showed contaminants above MTCA Method C Industrial Cleanup Values are co-located with uranium contamination above the uranium cleanup standard. The fact that these data are correlated will simplify implementation of the cleanup action by allowing field decisions based on field screening for uranium.

This addendum functions as a revision to the 300 APT Closure Plan and 300-FF-1 Phase III FS. The documentation contained herein overrides any contrary information or statements made in those documents.

REFERENCES

Dennison, D. I., D. R. Sherwood, and J. S. Young, 1989, *Status Report on Remedial Investigation of the 300 Area Process Ponds*, PNL-6442, Pacific Northwest Laboratory, Richland, Washington.

Zimmerman, M. G. and C. D. Kossick, 1987, *300 Area Process Trench Sediment Analysis Report*, WHC-SP-0193, Westinghouse Hanford Company, Richland, Washington.

Figure AD-1. Cobalt-60 Countour Map of South Process Pond.

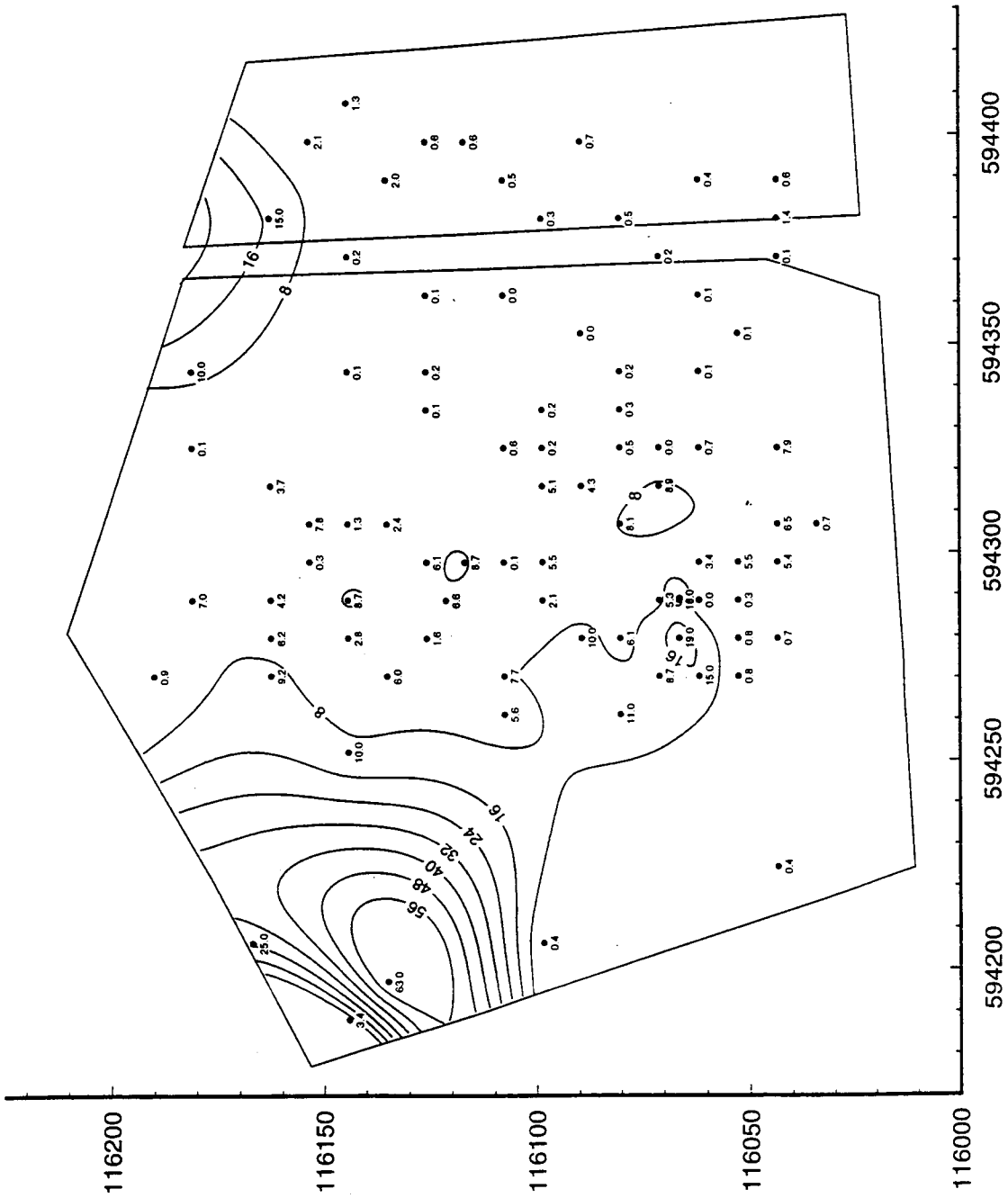

Figure AD-2. Alternative P-3 Process Waste Cleanup Zones.

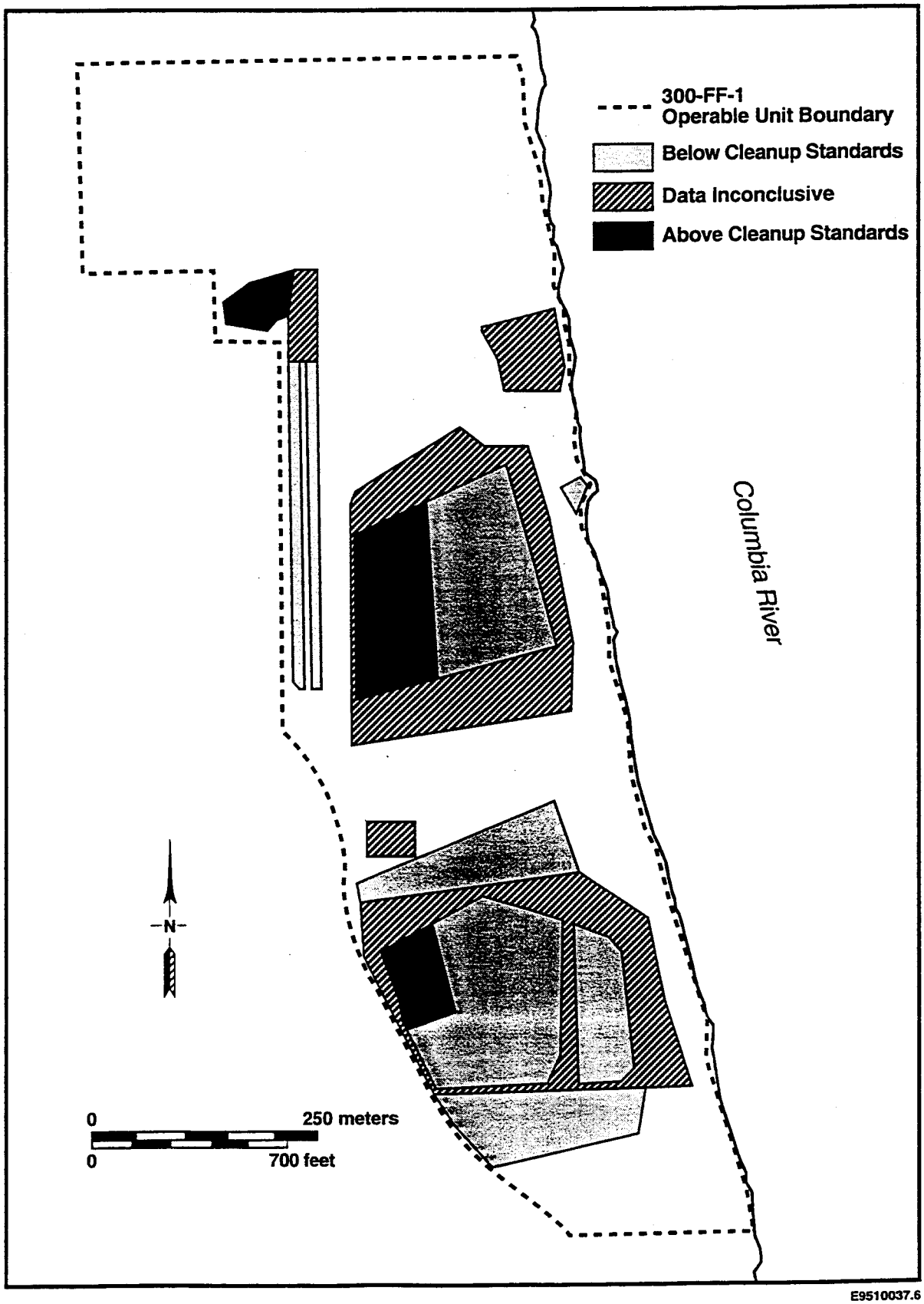

Table AD-1. Data Review Summary.

Constituent	Location	MTCA C (mg/kg)	Maximum Conc. (mg/kg)	Uranium Conc. (pCi/g)	Data Set
Arsenic	300 APT	188	319	*	SW-846
Thallium	300 APT	245	25,000	*	SW-846
Cadmium	300 APT	21.5	222	*	SW-846
Benzo(a)pyrene	300 APT	18	27	> 15,000	CLP
Chrysene	300 APT	18	43	> 15,000	CLP
PCBs	300 APT	17	19.5	20,000	CLP
PCBs	NPP	17	42	-3,600	SW-846

*Samples associated with the SW-846 data in the 300 APT were only analyzed for Lo-Alpha and Beta. For the three samples with arsenic, thallium, and cadmium the Lo-Alpha values were 250 pCi/g, 1,260 pCi/g, and 52 pCi/g, respectively. The Beta values were 1,460 pCi/g, 9,140 pCi/g, and 262 pCi/g, respectively. The PCB sample contained Lo-Alpha of 1,960 pCi/g and Beta of 2,140 pCi/g.

NOTES:

1. All 300 APT samples are Pre-ERA analyses, meaning all contaminants were moved to the spoils pile during the ERA.

2. The maximum concentrations indicated from the CERCLA data set are all estimated quantities assigned during data validation.

Table AD-2. Cost Estimate for Alternative P-1 - No Action.

Item		Cost[a]	Notes
CAPITAL COSTS (thousands)		**$0**	Use existing wells
POST-CLOSURE CARE COSTS			
Present value of monitoring costs		$1,263	See Table AD-12
Contingency	25%	$316	
NET PRESENT VALUE COST FOR POST-CLOSURE CARE[b]		**$1,579**	
TOTAL ALTERNATIVE COST (NET PRESENT VALUE)[c]		**$1,579**	In thousands

[a] Costs are for mid-1994, in thousands.

[b] Monitoring for 30 years; interest (discount) rate of 5 percent, net of inflation.

[c] The sum of capital and operating costs and the net present value of the post-closure care costs.

Table AD-3. Cost Estimate for Alternative P-2a - Soil Cover.

Item	Unit Cost	Units	Qty	Cost[a]	Notes
CAPITAL COSTS					
Silty soil cover[b]	$55,725	ac	50	$2,786	See Table AD-13 (excludes sanitary facilities)
Fencing	$15.00	lf	10,000	$150	
Air monitoring - capital				$50	
Air monitoring analyses	$50,000	yr	1	$50	During remedial action
Groundwater monitoring wells	$30,330	wells	8	$243	For performance monitoring
Site preparation (Mob, Demob & Rd. Maint.)				$165	Avg. of MCACES mob/demob calc. (w/50% rd. maint)
Subtotal Capital				$3,444	
Contractor overhead and profit	25%			$861	
Subtotal				$4,305	
Engineering and construction surveillance	70%			$3,014	
Subtotal				$7,319	
Contingency	25%			$1,830	
TOTAL CAPITAL COSTS (thousands)				**$9,149**	
POST-CLOSURE CARE COSTS					
Soil cover maintenance	$900	ac-yr	50	$692	Present value calculation
Fence maintenance	$0.50	lf-yr	10,000	$77	Present value calculation
Present value of monitoring costs				$1,263	See Table AD-12
Subtotal post-closure costs (net present value)				$2,032	
Contingency	25%			$508	
NET PRESENT VALUE COST FOR POST-CLOSURE CARE[c]				**$2,540**	In thousands
TOTAL ALTERNATIVE COST (NET PRESENT VALUE)[d]				**$11,689**	In thousands

[a] Costs are for mid-1994, in thousands.

[b] 2 feet of silty soil over entire contaminated area; to prevent direct contact.

[c] Maintenance and monitoring for 30 years; interest (discount) rate of 5 percent, net of inflation.

[d] The sum of capital and operating costs and the net present value of the post-closure care costs, rounded to hundred thousands.

Table AD-4. Cost Estimate for Alternative P-2b - Consolidation and Soil Cover.

Item	Unit Cost	Units	15 mrem/yr Qty	15 mrem/yr Cost[b]	Notes
CAPITAL COSTS					
Consolidate contaminated soil	$10.30	cy	279,000	$2,874	c
Silty soil cover	$55,725	ac	14	$780	e
Fencing	$15.00	lf	6,000	$90	
Air monitoring - capital				$50	
Air monitoring analyses	$50,000	yr	1	$50	f
Groundwater monitoring wells	$30,330	well	8	$243	g
Site preparation (Mob, Demob & Rd. Maint.)				$165	h
Subtotal Capital				$4,252	
Contractor overhead and profit	25%			$1,063	
Subtotal				$5,315	
Engineering and construction surveillance	70%			$3,721	
Subtotal				$9,036	
Contingency	25%			$2,259	
TOTAL CAPITAL COSTS (thousands)				**$11,295**	
POST-CLOSURE CARE COSTS					
Soil cover maintenance	$900	ac-yr	14	$194	i
Fence maintenance	$0.50	lf-yr	6,000	$46	i
Present value of monitoring costs				$1,263	j
Subtotal post-closure costs (net present value)				$1,503	
Contingency	25%			$376	
NET PRESENT VALUE COST FOR POST-CLOSURE CARE[k]				**$1,879**	
TOTAL ALTERNATIVE COST (NET PRESENT VALUE)[l]				**$13,174**	

[a] Not a remediation alternative; provided for comparison.

[b] Costs are for mid-1994, in thousands.

[c] Includes regrading & compaction. Excludes sanitary facility and process trenches.

[d] See Table AD-13.

[e] 2 feet of silty soil over contamination to prevent direct contact with residual contamination.

[f] During remedial action.

[g] For performance monitoring.

[h] Avereage of Pond/Trench and Burial Ground MCACES calc. and 50% of road maintenance (assumed road gets half the traffic).

[i] Present value calculation.

[j] See Table AD-12.

[k] Maintenance and monitoring for 30 years; interest (discount) rate of 5 percent, net of inflation (in thousands).

[l] The sum of capital and operating costs and the net present value of the post-closure care costs (in thousands).

Table AD-5. Cost Estimates for Alternative P-3 - Selective Excavation and Disposal.

Item	Unit Cost	Units	15 mrem/yr Qty	15 mrem/yr Cost[b]	Notes
CAPITAL COSTS					
Excavation & pre-screening of soil (red)	$17.69	cy	257,615	$4,557	i
Excavation of soil, no screening (green)	$3.36	cy	66,385	$223	i
Weight of contaminated soil		tons	137,700		c
Backfill over-excavated clean soil	$6.27	cy	324,000	$2,031	i
Regrading (w/above)	$0.00	cy	0	$0	
Fixation to meet ERDF leachate criteria	varies	ton	0	$0	n/a
Hauling & ERDF disposal of fixated soil	$20.22	ton	0	$0	n/a
Hauling & ERDF disposal of untreated soil	$20.22	ton	137,700	$2,784	e
Silty soil cover	$55,725	ac	0	$0	n/a
Air monitoring - capital				$50	
Air monitoring analyses	$50,000	yr	1.5	$75	g
Groundwater monitoring wells	$30,330	well	0	$0	n/a
Site preparation (Mob, Demob & Road Maint.)				$217	i
Subtotal Capital				$9,937	
Contractor overhead and profit	25%			$2,484	
Subtotal				$12,421	
Engineering and construction surveillance	70%			$8,695	
Subtotal				$21,116	
Contingency	25%			$5,279	
TOTAL CAPITAL COSTS (thousands)				**$26,395**	
POST-CLOSURE CARE COSTS					
Soil cover maintenance	$900	ac-yr	0	$0	n/a
Present value of monitoring costs				$0	n/a
Subtotal post-closure costs (net present value)				$0	
Contingency	25%			$0	
NET PRESENT VALUE COST FOR POST-CLOSURE CARE[l]				**$0**	
TOTAL ALTERNATIVE COST (NET PRESENT VALUE)[m]				**$26,395**	

[a] Excavation and disposal of all contamination

[b] Costs are for mid-1994, in thousands.

[c] After pre-screening.

[e] Unit cost per Table AD-13.

[g] During remedial action.

[h] For performance monitoring.

[i] Rate derived from Pond/Trench MCACES calc.

[l] Maintenance and monitoring for 30 years; interest (discount) rate of 5 percent, net of inflation.

[m] The sum of capital and operating costs and the net present value of the post-closure care costs.

Table AD-6. Cost Estimate for Alternative P-4 - Excavation, Soil Washing, and Fines Disposal.

Item	Unit Cost	Units	15 mrem/yr Qty	15 mrem/yr Cost[a]	Notes
CAPITAL COSTS					
Excavation and pre-screening of soil	$17.69	bcy	324,000	$5,732	h
Weight of contaminated soil		tons	137,700		b
Backfill over-excavated clean soil	$6.27	bcy	324,000	$2,031	h
Regrading (w/above)	$0.00	bcy	0	$0	n/a
Soil washing	varies	tons	137,700	$7,436	c
Hauling and ERDF disposal	$20.22	tons	12,668	$256	d
Backfill treated coarse soil	$6.27	bcy	w/above	w/above	e, h
Silty soil cover	$55,725	ac	0	$0	n/a
Air monitoring - capital				$50	
Air monitoring analyses	$50,000	yr	3.2	$160	g
Groundwater monitoring wells	$30,330	well	0	$0	n/a
Site preparation (Mob, Demob & Road Maint.)				$217	h
Subtotal Capital				$15,882	
Contractor overhead and profit	25%			$3,971	
Subtotal				$19,853	
Engineering and construction surveillance	70%			$13,897	
Subtotal				$33,750	
Contingency	25%			$8,438	
TOTAL CAPITAL COSTS (thousands)				**$42,188**	
POST-CLOSURE CARE COSTS					
Soil cover maintenance	$900	ac-yr	0	$0	N/A
Present value of monitoring costs				$0	N/A
Subtotal post-closure costs (net present value)				$0	
Contingency	25%			$0	
NET PRESENT VALUE COST FOR POST-CLOSURE CARE[l]				**$0**	
TOTAL ALTERNATIVE COST (NET PRESENT VALUE)[m]				**$42,188**	

[a] Costs are for mid-1994, in thousands.
[b] After pre-screening.
[c] See Table AD-15.
[d] Dewatered fines after fixation.
[e] Soil meeting direct exposure remediation goals (assumes 1.61 ton/bcy).
[f] 2 feet of silty soil over entire contaminated area; to protect groundwater and prevent direct contact with residual contamination.
[h] Rate derived from Pond/Trench MCACES calc.
[i] For performance monitoring.
[k] See Table AD-12
[l] Maintenance and monitoring for 30 years; interest (discount) rate of 5 percent, net of inflation (in thousands).
[m] The sum of capital and operating costs and the net present value of the post-closure care costs (in thousands).

Table AD-7. Cost Estimate for Alternative B-1 - No Action.

Item	Quantity	Units	Unit Cost	Cost[a]	Notes
CAPITAL COSTS					
Groundwater monitoring wells	8	wells	$30,330	$243	For performance monitoring
Contractor overhead and profit			25%	$61	
Subtotal				$304	
Engineering and construction surveillance			70%	$213	
Subtotal				$517	
Contingency			25%	$129	
TOTAL CAPITAL COSTS (thousands)				**$646**	
POST-CLOSURE CARE COSTS					
Present value of monitoring costs				$1,263	See Table AD-12
Contingency			25%	$316	
NET PRESENT VALUE COST FOR POST-CLOSURE CARE[b]				**$1,579**	In thousands
TOTAL ALTERNATIVE COST (NET PRESENT VALUE)[c]				**$2,225**	In thousands

[a] Costs are for mid-1994, in thousands.

[b] Monitoring for 30 years; interest (discount) rate of 5 percent, net of inflation.

[c] The sum of capital and operating costs and the net present value of the post-closure care costs.

Table AD-8. Cost Estimate for Alternative B-2 - Institutional Controls.

Item	Quantity	Units	Unit Cost	Cost[a]	Notes
CAPITAL COSTS					
Fencing	400	lf	$15	$6	
Groundwater monitoring wells	8	wells	$30,330	$243	For performance monitoring
Subtotal Capital				$249	
Contractor overhead and profit			25%	$62	
Subtotal				$311	
Engineering and construction surveillance			70%	$218	
Subtotal				$529	
Contingency			25%	$132	
TOTAL CAPITAL COSTS (thousands)				**$661**	
POST-CLOSURE CARE COSTS					
Present value of monitoring costs				$1,263	See Table AD-12
Fence maintenance	400	lf-yr	$0.50	$3	Present value calculation
Subtotal post-closure costs (net present value)				$1,266	
Contingency			25%	$317	
NET PRESENT VALUE COST FOR POST-CLOSURE CARE[b]				**$1,583**	In thousands
TOTAL ALTERNATIVE COST (NET PRESENT VALUE)[c]				**$2,244**	In thousands

[a] Costs are for mid-1994, in thousands.

[b] Maintenance and monitoring for 30 years; interest (discount) rate of 5 percent, net of inflation.

[c] The sum of capital and operating costs and the net present value of the post-closure care costs.

Table AD-9. Cost Estimate for Alternative B-3 - Consolidation and Soil Cover.

Item	Unit Cost	Units	B-3 Qty	B-3 Cost[c]		Notes
CAPITAL COSTS						
Excavation and pre-screening of soil	$18.36	cy	26,222	$481	f	
Weight of contaminated soil		tons	17,000			
Backfill / Regrading	$9.86	cy	26,222	$259	f	Clean & contaminated soil
Regrading (w/above)	$0.00	cy	0	$0	n/a	
Fixation to meet ERDF leachate criteria	$0	ton	0	$0	n/a	
Hauling & ERDF disposal of fixated soil	$20.22	ton	0	$0	n/a	
Hauling & ERDF disposal of untreated soil	$20.22	ton	17,000	$344	g	Assume 1.61 ton per bcy
Silty soil cover (surface barrier)	$55,725	ac	0	$0	n/a	
Air monitoring - capital				$50		
Air monitoring analyses	$50,000	yr	1	$50		During remedial action
Groundwater monitoring wells	$30,330	well	0	$0	n/a	
Site preparation (Mob, Demob & Road Maint.)				$184		Derived from Burial Ground MCACES calc.
Subtotal Capital				$1,368		
Contractor overhead and profit	25%			$342		
Subtotal				$1,710		
Engineering and construction surveillance	70%			$1,197		
Subtotal				$2,907		
Contingency	25%			$727		
TOTAL CAPITAL COSTS (thousands)				**$3,634**		
POST-CLOSURE CARE COSTS:						
Soil cover maintenance	$900	ac-yr	0	$0	n/a	Present value calculation, N/A
Present value of monitoring costs				$0	n/a	See Table AD-12
Subtotal post-closure costs (net present value)				$0		
Contingency	25%			$0		
NET PRESENT VALUE COST FOR POST-CLOSURE CARE[d]				**$0**		In thousands
TOTAL ALTERNATIVE COST (NET PRESENT VALUE)[e]				**$3,634**		In thousands

[a] Excavation to achieve direct exposure PRGs

[c] Costs are for mid-1994, in thousands.

[d] Maintenance and monitoring for 30 years; interest (discount) rate of 5 percent, net of inflation.

[e] The sum of capital and operating costs and the net present value of the post-closure care costs.

[f] Rate derived from MCACES Burial Ground Calc.

[g] Unit Cost per Table AD-13.

Table AD-10. Cost Estimate for Alternative B-4 - Excavation and Disposal.

Item	Unit Cost	Units	B-4 Qty	B-4 Cost[c]		Notes
CAPITAL COSTS						
Excavation and pre-screening of soil	$18.36	cy	113,000	$2,075	f	
Weight of contaminated soil		tons	100,000			
Backfill / Regrading	$9.86	cy	113,000	$1,114	f	Clean & borrow soil.
Regrading w/above	$0.00	cy	0	$0	n/a	
Fixation to meet ERDF leachate criteria	$0	ton	0	$0	n/a	
Hauling & ERDF disposal of fixated soil	$20.22	ton	0	$0	n/a	
Hauling & ERDF disposal of untreated soil	$20.22	ton	100,000	$2,022	g	Assume 1.61 ton per bcy
Silty soil cover (surface barrier)	$55,725	ac	0	$0	n/a	
Air monitoring - capital				$50		
Air monitoring analyses	$50,000	yr	2	$100		During remedial action
Groundwater monitoring wells	$30,330	well	0	$0	n/a	Performance monitoring, N/A
Site preparation (Mob. Demob & Road Maint.)				$184		Derived from Burial Ground MCACES calc.
Subtotal Capital				$5,545		
Contractor overhead and profit	25%			$1,386		
Subtotal				$6,931		
Engineering and construction surveillance	70%			$4,852		
Subtotal				$11,783		
Contingency	25%			$2,946		
TOTAL CAPITAL COSTS (thousands)				**$14,729**		
POST-CLOSURE CARE COSTS:						
Soil cover maintenance	$900	ac-yr	0	$0		Present value calculation, N/A
Present value of monitoring costs				N/A		See Table AD-12
Subtotal post-closure costs (net present value)				$0		
Contingency	25%			$0		
NET PRESENT VALUE COST FOR POST-CLOSURE CARE[d]				**$0**		In thousands
TOTAL ALTERNATIVE COST (NET PRESENT VALUE)[e]				**$14,729**		In thousands

[a] Excavation to achieve direct exposure PRGs

[c] Costs are for mid-1994, in thousands.

[d] Maintenance and monitoring for 30 years; interest (discount) rate of 5 percent, net of inflation.

[e] The sum of capital and operating costs and the net present value of the post-closure care costs.

[f] Rate derived from MCACES Burial Ground Calc.

g Unit cost per Table AD-13.

Table AD-11. Common Factors.

Item	Value	Source/Comments
Interest rate (net of inflation)	5%	EPA value; for present value calculations
Post-closure care period	30 yr	RCRA post-closure care period
Present value factor using above	15.37	Calculated
Contractor overhead & profit (OH&P)	25%	Mid-range value for site remediation
Engineering & construction surveillance (E&CS)	70%	Rounded sum of factors
Definitive design	9%	Average of Pond & Burial Ground calc. (100BC 1995 Baseline adjusted to 300-FF-1 parameters).
On-site indirects (field non-manual including QA and Safety, training, direct distribs and general indirects).	46%	Average of MCACES Pond & Burial Ground calc.
PM/CM	15%	Average of MCACES Pond & Burial Ground calc.
Contingency	25%	Appropriate for FS
Combined factor	266%	OH&P, E&CS, contingency

Table AD-12. Basic Unit Costs.

Item	Unit Cost	Units	Source/Comments
SITE WORK (labor, materials and equipment):			Not including contractor overhead & profit
Pond & Trench Excavation/Placement:			
Excavate waste/contaminated soil (red)	$17.69	bcy	Total of the following rates from MCACES and Excel calcs.
excavation	$3.36	bcy	Excavation (cont. & non-cont.)/dust supr/laundry/container decon/lighting
screening	$14.33	bcy	Rad mon/anal eq/sampling/samples/hpt support
Backfill/Regrade, (W/Haul @24 miles round trip)	$6.27	bcy	Spread & compact clean stockpiled soil
Regrading (same activity as backfill)	$6.27	bcy	Spread & compact contaminated soil
Excavate waste/contaminated soil (green)	$3.36	bcy	Same as above but excludes field screening
Burial Ground Excavation/Placement:			
Excavate waste/contaminated soil	$18.36	bcy	Total of the following rates from MCACES and Excel calcs.
excavation	$4.33	bcy	excav/dust supr/laundry/container decon/lighting
screening	$14.03	bcy	rad mon/anal eq/sampling/samples/hpt support
Backfill/Regrade, (W/Haul @24 miles round trip)	$9.86	bcy	Spread & compact clean stockpiled soil & borrow
Regrading (same activity as backfill)	$9.86	bcy	Spread & compact contaminated soil.
Misc Placement:			
Consolidate waste	$10.30	bcy	Total of the following rates (without field separation or pre-screening)
excavation/compile/compact/dust supr	$9.79	bcy	Rate from MCACES calculation.
ppe laundry service	$0.51	bcy	Rate from MCACES Pond/Trench calc.
Fencing	$15.00	lf	Escalated from Means 1993; 6-ft fence w/ barbed wire
Materials (in place, including normal compaction):			
Soil Cover	$0.00	n/a	See Table AD-13
General construction:			
Office building	$47.00	sf	WHC 1994
Temporary structure cover	$27.80	sf	WHC 1994
TREATMENT PLANT LABOR:			WHC 1994
Plant manager	$101,500	yr	
Plant engineer	$72,500	yr	
Operator, plant	$50,750	yr	
Operator, equipment	$43,500	yr	
Laborer	$36,250	yr	
Radiation/Health & Safety Officer	$72,500	yr	
Health Physics Technician	$50,750	yr	
Clerical	$36,250	yr	
UTILITIES AND CHEMICALS:			
Electricity	$60.00	1000 kwh	Typical for northwest region
Water	$7.00	1000 gal	WHC 1994
Portland cement	$95.00	ton	Vendor estimate
Fly ash	$35.00	ton	
OTHER:			
Fence maintenance	$0.50	lf-yr	Allowance
Soil cover maintenance	$900.00	ac-yr	Allowance, including construction surveillance
Air monitoring capital costs	$50,000	LS	Sampling stations, 10ea, quoted price.
Annual air monitoring costs	$50,000	yr	During remedial action; allowance
Misc. Site Preparation, Soil Washing	$100,000	ls	Allowance
Misc. Site Prep., Pond/Trch (mob/demob/rd. maint.)	$217,080	ls	Pond/Trench MCACES calcs @ 1994 dollars ($.67/total exc. bcy)
Misc. Site Prep., Burial Gnd. (mob/demob/rd maint.	$184,000	ls	Burial Ground MCACES calcs @ 1994 dollars ($1.84/total exc. bcy)
Groundwater monitoring well	$30,330	each	4" stainless steel; 40 ft deep (WHC memo 6/17/94 @ 1994 dollars).
Long-term groundwater monitoring costs:			
Annual monitoring costs - first 5 years	$100,000	yr	Allowance for quarterly monitoring
Annual monitoring costs - after 5 years	$50,000	yr	Allowance for semi-annual monitoring
Performance review (every 5 years)	$100,000	each	Allowance
Present value of long-term monitoring costs	$1,263,000	LS	Assuming 30 years @ 5% net interest; includes 5-yr reviews

Table AD-13. Derived Unit Costs.

Item	Quantity	Units	Unit Cost	Cost	Notes
NOTE:					
All unit costs used in the cost estimates are base costs ("raw"), before addition of OH&P, E&CS, and contingency.					
The costs for OH&P, E&CS, and contingency are added as percentages in the costs estimates for each alternative.					
ERDF Disposal Cost:					Total costs include OH&P, E&CS, and contingency
Initial construction plus operations	$2.2 E+7	lcy	$50.91	$1.1 E+9	WHC budget estimates (verbal communication)
Modified Hanford Barrier	$2.8 E+7	lcy	$7.25	$2.0 E+8	Total cost from DOE/RL 1994d, Table 9-7
Post-closure care			$2.00		Allowance
Total unit cost for disposal			$60.16		
Divide by combined factor			/ 2.7		OH&P, E&CS, contingency (Table AD-11)
			$23.00		Rounded to units
Transportation (truck @ 48 miles round trip)			$5.31		Avg. of hauling cost from Pond & Burial Ground MCACES calcs.
ERDF Disposal Unit Cost (raw)		**LCY**		**$28.31**	Base unit cost (w/o OH&P, E&CS, or contingency)
		LCY		**$75.19**	Fully burdened unit cost (for comparison)
		TON		**$20.22**	Same as above only converted to $/tn (1.4TN per LCY)
		TON		**$53.70**	Same as above only converted to $/tn (1.4TN per LCY)
Soil Cover:					For groundwater protection
Silt 2ft/sf — silt cost	3,227	bcy	$0.00	$0	No charge for silt from McGee Ranch
load/haul silt	3,227	bcy	$13.46	$43,431	Rate from MCACES calc. (68 miles round trip).
spread & compact	3,227	bcy	$3.81	$12,294	Rate from MCACES Pond/Trench calc.
Soil Cover Unit Cost		**ac**		**$55,725**	

Table AD-14. Estimated Costs for Ex-Situ Fixation.

Item	Unit Cost	Units	3 mrem/yr Qty	3 mrem/yr Cost[a]	10 mrem/yr Qty	10 mrem/yr Cost[a]	15 mrem/yr Qty	15 mrem/yr Cost[a]	25 mrem/yr Qty	25 mrem/yr Cost[a]	Notes
DESIGN ASSUMPTIONS:											
Weight of contaminated soil		tons									See Table 6-1
Percent requiring fixation (estimated)											To meet ERDF leachate criteria
Weight of soil treated		tons									
Soil processing rate		tons/hr									
Operating schedule		hrs/wk									
Staffing		hrs/wk									
On-line time (calculated)											Operating time / staffing
Treatment period		yr									Calculated
CAPITAL COSTS:											
Package system											Vendor est.; includes size reduction
Front-end loader											
Air monitoring for treatment system											
Equipment Cost (subtotal)											
Depreciated capital for project life											7 yr life; used operating time plus 1 mo.
Site preparation											Grading, utility connections, soil pad
Mobilization and startup											
TOTAL CAPITAL COST (thousands)											
OPERATING COSTS (for period of operation):											
LABOR:			Man-years		Man-years		Man-years		Man-years		See Table AD-16
Plant manager/engineer	$101,500	ea/yr	0		0		0		0		1 shift; 8 hr/day
Operators (2)	$50,750	ea/yr	0		0		0		0		
Laborers (2)	$36,250	ea/yr	0		0		0		0		
Radiation / Health & safety officer	$72,500	ea/yr	0		0		0		0		
Health physics technician	$50,750	ea/yr	0		0		0		0		
Clerical	$36,250	ea/yr	0		0		0		0		Administrative
LABOR SUBTOTAL											Rounded to thousands
MATERIALS AND MAINTENANCE:											
Fixation chemicals	$0	/ ton	0		0		0		0		
Personnel protection	$1.50	/ ton	0		0		0		0		
Maintenance											Est. 6% of equipment cost annually
Treatment system air monitoring	$200	samp	0		0		0		0		2 per week
Offsite analytical (QA for onsite XRF)	$200	samp	0		0		0		0		10 per week
Utilities, supplies and miscellaneous	$2.00	/ ton	0		0		0		0		Allowance
TOTAL OPERATING COST (thousands)											For treatment period
EX-SITU FIXATION BASE UNIT COST		**per feed ton**									In whole dollars

[a] Costs are for mid-1994, in thousands.

Table AD-15. Estimated Costs for Soil Washing.

Item	Unit Cost	Units	15 mrem/yr Qty	15 mrem/yr Cost[a]	Notes
DESIGN ASSUMPTIONS:					
Weight of soil treated		tons	137,700		See Table 6-1
Soil processing rate		tons/hr	25		
Operating schedule		hrs/wk	50		
Staffing		hrs/wk	72		
On-line time (calculated)			69%		Operating time / staffing
Treatment period		yr	2.2		Calculated
CAPITAL COSTS:					
Soil washing equipment				$4,709	See Figure 6-4 and Table AD-16
Depreciated capital for project life				$1,816	7 yr life; operating time plus 6 mo.
Site preparation				$231	Grading, utility connections, soil pad
Mobilization and startup				$529	
Process building	$27.80	sf	7,200	$200	
Plant support building	$47.00	sf		$150	Decontamination, lab., admin.
TOTAL CAPITAL COST (thousands)				**$2,926**	
OPERATING COSTS (for period of operation:					
Labor annual cost				$932	15 mrem value avg of 10 & 25 values
Labor total cost		yr	2.2	$2,050	See Table AD-16
Polymers	$2.00	/ ton	137,700	$275	For flocculation & filter press
Fixation chemicals (for fines)	$24	/ ton	12,668	$304	Per ton of dewatered fines
Power	$60	1000 kwh	6,500	$390	
Water	$7	1000 gal	3,194	$22	
Personnel protection	$1.50	/ ton	137,700	$207	Laundry, monitoring, & expendables
Supplies and miscellaneous	$1.75	/ ton	137,700	$241	
Maintenance				$622	Est. 6% of equipment cost annually
Treatment system air monitoring	$200	samp	220	$44	2 per week
Offsite analytical	$200	samp	1,100	$220	QA for onsite XRF; 10 per week
Process studies				$200	To fine-tune processing
TOTAL OPERATING COST (thousands)				**$4,575**	
SOIL WASHING BASE UNIT COST		**per feed ton**		**$54**	In whole dollars

[a] Costs are for mid-1994, in thousands.

Table AD-16. Breakdown of Soil Washing Costs.

Item	Unit Cost	Units	50 ton/hr System Qty	50 ton/hr System Cost[a]	25 ton/hr System Qty	25 ton/hr System Cost[a]	Notes
ESTIMATED EQUIPMENT COSTS:							WHC 1994
Feed module				$575,000		$448,000	Grizzly, conveyors, apron feeder
Rotary scrubber				$430,000		$350,000	
Coarse screen				$280,000		$222,000	4 mm screen, water spray, cyclone #1
Screen pumping module				$295,000		$243,000	Conveyor, pumping, piping, controls
Flocculation module				$210,000		$175,000	Flocculator, tanks, mixers, cyclone #3
Reagent module				$130,000		$114,000	For polymer addition
Attrition scrubber				$465,000		$365,000	6 attrition cells, 3 pumps, conveyor
Dewatering screen module				$225,000		$188,000	vibrating screen, cyclones #2 & #3
Thickener				$415,000		$273,000	Lamella thickener, pump, tank
Belt filter press				$505,000		$412,000	
Filter support module				$185,000		$152,000	Compressor and conveyors for filter press
Electrical controls				$325,000		$302,000	Control panel in control room
Water treatment (precipitation / ion exchange)				$0		$0	Assume flocculation/settling sufficient
Stabilization equipment				$400,000		$300,000	
Air monitoring for treatment system				$125,000		$125,000	
Sampling equipment and XRF				$150,000		$150,000	
Front-end loader				$150,000		$150,000	
Plant engineering by supplier				$300,000		$300,000	
Freight, assembly and startup				$475,000		$440,000	By equipment vendor
TOTAL SOIL EQUIPMENT COST				**$5,640,000**		**$4,709,000**	
ESTIMATED LABOR COSTS:			2 shifts (72 hr/wk)		1 shift (40 hr/wk)		WHC 1994
Plant manager	$101,500	ea/yr	1	$101,500	1	$101,500	
Plant engineer	$72,500	ea/yr	1	$72,500	1	$72,500	
Plant operators	$50,750	ea/yr	10	$507,500	5	$253,750	
Equipment operators	$43,500	ea/yr	2	$87,000	1	$43,500	
Laborers	$36,250	ea/yr	2	$72,500	3	$108,750	
Radiation / Health & safety officer	$72,500	ea/yr	2	$145,000	1	$72,500	
Health physics technicians	$50,750	ea/yr	2	$101,500	1	$50,750	
Clerical	$36,250	ea/yr	1	$36,250	1	$36,250	
TOTAL SOIL WASHING LABOR				**$1,123,750**		**$739,500**	

[a] Costs are for mid-1994.

Table AD-17. Contaminants of Concern Maximum Concentrations the 300-FF-1 Operable Unit Soil.

Contaminants of Concern	Maximum Concentration[a] Detected in Soils	Cleanup Levels	Source of Cleanup Level
Cobalt-60	81 pCi/g	15 mrem/yr[b]	40 CFR 196[c]
Uranium-234	9,700 pCi/g		
Uranium-235	1,600 pCi/g		
Uranium-238	9,100 pCi/g		
Arsenic[d]	319 mg/kg[e]	188 mg/kg	MTCA[f]
Benzo(a)pyrene[d]	27 mg/kg[e]	18 mg/kg	MTCA[f]
Chrysene[d]	43 mg/kg[e]	18 mg/kg	MTCA[f]
Cadmium[d]	222 mg/kg[e]	21.5 mg/kg	MTCA[f]
Polychlorinated Biphenyls	42 mg/kg[e]	17 mg/kg	MTCA[f]
Thallium[d]	25,000 mg/kg[e]	245 mg/kg	MTCA[f]

[a]Data presented are maximum levels. These contaminant levels are limited to only a few areas (see Figure AD-2).

[b]An exposure assessment model is used to convert between soil concentrations (pCi/g) and dose levels (mrem/yr). For example, in 300-FF-1, the 15 mrem/yr dose from total uranium (uranium-234, -235, and -238) equates to 350 pCi/g.

[c]40 CFR 196 is a proposed regulation.

[d]**Contaminants** found **only** in the 300 Area Process Trenches Spoils Pile.

[e]These contaminant concentrations were found in locations that also had high total uranium concentrations (above 350 pCi/g).

[f]State of Washington, Model Toxic Control Act, Method C, Industrial Cleanup Values For Soils (MTCA Cleanup Levels and Risk Calculations, update August 31, 1994).

EXECUTIVE SUMMARY

The Hanford Facility is owned by the U.S. Government and operated by the U.S. Department of Energy, Richland Operations Office. Dangerous waste and mixed waste (containing both radioactive and dangerous components) are produced and managed on the Hanford Facility. The dangerous waste is regulated in accordance with the *Resource Conservation and Recovery Act of 1976* (RCRA) and the *State of Washington Hazardous Waste Management Act of 1976* [as administered through the Washington State Department of Ecology, "Dangerous Waste Regulations," *Washington Administrative Code*, Chapter 173-303]. The radioactive component of mixed waste is interpreted by the U.S. Department of Energy to be regulated under the *Atomic Energy Act of 1954*; the nonradioactive dangerous component of mixed waste is interpreted to be regulated under RCRA and the *Washington Administrative Code*, Chapter 173-303.

For the purposes of RCRA, the Hanford Facility is considered to be a single facility. The single dangerous waste permit identification number issued to the Hanford Facility by the U.S. Environmental Protection Agency and the Washington State Department of Ecology is Environmental Protection Agency/State Identification Number WA7890008967. This identification number encompasses a number of treatment, storage, and/or disposal units within the Hanford Facility. Treatment, storage, and/or disposal units that are no longer operating will be closed under interim status (using final status standards in the *Washington Administrative Code*, Chapter 173-303-610).

The *300 Area Process Trenches Modified Closure/Postclosure Plan* (Rev. 1) consists of a *Resource Conservation and Recovery Act of 1976* Part A Dangerous Waste Permit Application, Form 3 and a RCRA Closure/Postclosure Plan. An explanation of the Part A Permit Application, Form 3 submitted with this document is provided at the beginning of the Part A Section. The closure plan consists of nine chapters and six appendices.

This treatment, storage, and/or disposal unit closure is unique because it is integrated with the *Comprehensive Environmental Response, Compensation, and Liability Act of 1980* 300-FF-1 Operable Unit remedial action. This integration is necessary to ensure that the activities of the two units remain physically consistent in accordance with the *Hanford Federal Facility Agreement and Consent Order Action Plan* (Section 5.5) so that unit contamination is most economically and efficiently addressed.

ACRONYMS

300 APT	300 Area Process Trenches
ACV	administrative control value
ALARA	as low as reasonably achievable
ARAR	applicable or relevant and appropriate requirements
BHI	Bechtel Hanford, Inc.
CAS	Chemical Abstract System
CERCLA	*Comprehensive Environmental Response, Compensation, and Liability Act of 1980*
CFR	*Code of Federal Regulations*
CLARC II	Cleanup Levels and Risk Calculation
CPF	cancer potency factor [same as slope factor (SF)]
DCG	derived concentration guide
DOE	U.S. Department of Energy
DOE-RL	U.S. Department of Energy, Richland Operations Office
DQO	data quality objective
DWS	drinking water standards
Ecology	Washington State Department of Ecology
EPA	Environmental Protection Agency
ERA	expedited response action
ERDF	Environmental Restoration Disposal Facility
FS	feasibility study
HBL	health-based level
HEAST	Health Effects Assessment Summary Tables
HEDL	Hanford Engineering Development Laboratory
HQ	hazard quotient
HSBRAM	Hanford Site Baseline Risk Assessment Methodology
ICR	incremental cancer risk
IRIS	Integrated Risk Information System
LOQ	limit of quantitation
MCL	maximum contaminant levels
MPC	maximum permissible concentration
MTCA	*Model Toxics Control Act*
O&M	operation and maintenance
PCB	polychlorinated biphenyl
PNL	Pacific Northwest Laboratory
PRG	preliminary remediation goal
QA	quality assurance
QAPjP	quality assurance project plan
QC	quality control
RCRA	*Resource Conservation and Recovery Act of 1976*
RfD	reference dose
RI	remedial investigation
RLWS	Radioactive Liquid Waste Sewer System
ROD	record of decision
SAP	sampling and analysis plan

SDWA	*Safe Drinking Water Act*
SF	slope factor
TEDF	Treated Effluent Disposal Facility
Tri-Party Agreement	*Hanford Federal Facility Agreement and Consent Order*
TSD	treatment, storage, and/or disposal
UCL	upper confidence limit
WAC	*Washington Administrative Code*
WHC	Westinghouse Hanford Company

PART A, FORM 3, PERMIT APPLICATION FOR THE 300 APT

1

Please print or type in the unshaded areas only
(fill-in areas are spaced for elite type, i.e., 12 character/inch).

FORM 3

DANGEROUS WASTE PERMIT APPLICATION

1. EPA/STATE I.D. NUMBER: W A 7 8 9 0 0 0 8 9

FOR OFFICIAL USE ONLY

APPLICATION APPROVED	DATE RECEIVED *(mo., day, & yr.)*	COMMENTS

II. FIRST OR REVISED APPLICATION

Place an "X" in the appropriate box in A or B below (mark one box only) to indicate whether this is the first application you are submitting for your facility or a revis application. If this is your first application and you already know your facility's EPA/STATE I.D. Number, or if this is a revised application, enter your facility's EPA/ I.D. Number in Section I above.

A. FIRST APPLICATION *(place an "X" below and provide the appropriate date)*

☐ 1. EXISTING FACILITY *(See instructions for definition of "existing" facility. Complete item below.)*

MO.	DAY	YR.
0 5	1 6	7 5

FOR EXISTING FACILITIES, PROVIDE THE DATE *(mo., day, & yr.)* OPERATION BEGAN OR THE DATE CONSTRUCTION COMMENCED *(use the boxes to the left)*

☐ 2. NEW FACILITY *(Complete item below)*

MO.	DAY	YR.

FOR NEW FACILITIES, PROVIDE THE DATE, *(mo., day, & yr)* OPERATION BEGAN OR IS EXPECTED TO BEGIN

B. REVISED APPLICATION *(place an "X" below and complete Section I above)*

☒ 1. FACILITY HAS AN INTERIM STATUS PERMIT

☐ 2. FACILITY HAS A FINAL PERMIT

III. PROCESSES - CODES AND CAPACITIES

A. PROCESS CODE - Enter the code from the list of process codes below that best describes each process to be used at the facility. Ten lines are provided for en codes. If more lines are needed, enter the code(s) in the space provided. If a process will be used that is not included in the list of codes below, then describe process *(including its design capacity)* in the space provided on the *(Section III-C)*.

B. PROCESS DESIGN CAPACITY - For each code entered in column A enter the capacity of the process.

1. AMOUNT - Enter the amount.

2. UNIT OF MEASURE - For each amount entered in column B(1), enter the code from the list of unit measure codes below that describes the unit of measure u Only the units of measure that are listed below should be used.

PROCESS	PROCESS CODE	APPROPRIATE UNITS OF MEASURE FOR PROCESS DESIGN CAPACITY
Storage:		
CONTAINER (barrel, drum, etc)	S01	GALLONS OR LITERS
TANK	S02	GALLONS OR LITERS
WASTE PILE	S03	CUBIC YARDS OR CUBIC METERS
SURFACE IMPOUNDMENT	S04	GALLONS OR LITERS
Disposal:		
INJECTION WELL	D80	GALLONS OR LITERS
LANDFILL	D81	ACRE-FEET *(the volume that would cover one acre to a depth of one foot)* OR HECTARE-METER
LAND APPLICATION	D82	*ACRES OR HECTARES*
OCEAN DISPOSAL	D83	GALLONS PER DAY OR LITERS PER DAY
SURFACE IMPOUNDMENT	D84	GALLONS OR LITERS

PROCESS	PROCESS CODE	APPROPRIATE UNITS MEASURE FOR PROC DESIGN CAPACIT
Treatment:		
TANK	T01	GALLONS PER DAY OF LITERS PER DAY
SURFACE IMPOUNDMENT	T02	GALLONS PER DAY OF LITERS PER DAY
INCINERATOR	T03	TONS PER HOUR OR METRIC TONS PER HO GALLONS PER HOUR C LITERS PER HOUR
OTHER (Use for physical, chemical, thermal or biological treatment processes not occurring in tanks, surface impoundments or incinerators. Describe the processes in the space provided; Section III-C.)	T04	GALLONS PER DAY OF LITERS PER DAY

UNIT OF MEASURE	UNIT OF MEASURE CODE
GALLONS	G
LITERS	L
CUBIC YARDS	Y
CUBIC METERS	C
GALLONS PER DAY	U

UNIT OF MEASURE	UNIT OF MEASURE CODE
LITERS PER DAY	V
TONS PER HOUR	D
METRIC TONS PER HOUR	W
GALLONS PER HOUR	E
LITERS PER HOUR	H

UNIT OF MEASURE	UN MEA C
ACRE-FEET	
HECTARE-METER	
ACRES	
HECTARES	

EXAMPLE FOR COMPLETING SECTION III *(shown in line numbers X-1 and X-2 below): A facility has two storage tanks, one tank can hold 200 gallons and the other can hold 400 gallons.* The facility also has an incinerator that can burn up to 20 gallons per hour.

LINE NUMBER	A. PROCESS CODE *(from list above)*	B. PROCESS DESIGN CAPACITY 1. AMOUNT *(specify)*	B. PROCESS DESIGN CAPACITY 2. UNIT OF MEASURE *(enter code)*	FOR OFFICIAL USE ONLY
X-1	S 0 2	600	G	
X-2	T 0 3	20	E	
1	D 8 4	11,356,200	V	
2				
3				
4				

LINE NUMBER	A. PROCESS CODE *(from list above)*	B. PROCESS DESIGN CAPACITY 1. AMOUNT *(specify)*	B. PROCESS DESIGN CAPACITY 2. UNIT OF MEASURE *(enter code)*	C
5				
6				
7				
8				
9				
10				

Continued from the front.

III. PROCESSES (continued)

C. SPACE FOR ADDITIONAL PROCESS CODES OR FOR DESCRIBING OTHER PROCESS (code "T04"). FOR EACH PROCESS ENTERED HERE INCLUDE DESIGN CAPAC:

D84

The 300 Area Process Trenches received nonregulated process cooling water from operations in the 300 Area of the Hanford Site. The process trenches also received dangerous waste from several research and development laboratories and from the fuels fabrication process. The waste was discharged to the 300 Area Process Trenches and allowed to percolate into the soil column underlying the trenches. The annual quantity of waste identified under item IV.B. reflects the total flow to the process trenches in one year, and not a volume of dangerous waste discharged to the unit. This estimate was made because accurate records are unavailable regarding dangerous waste volumes discharged to the trenches. The process trenches were designed to percolate up to 11,356,200 liters (3,000,000 gallons) per day of waste water. The 300 Area Process Trenches no longer receive dangerous waste and will be closed under interim status. The process design capacity reflects the maximum volume of water that was discharged daily, rather than the physical capacity of the unit.

IV. DESCRIPTION OF DANGEROUS WASTES

A. DANGEROUS WASTE NUMBER - Enter the four digit number from Chapter 173-303 WAC for each listed dangerous waste you will handle. If you handle dangerous wastes which are not listed in Chapter 173-303 WAC, enter the four digit number(s) that describes the characteristics and/or the toxic contaminants of those dangerous wastes.

B. ESTIMATED ANNUAL QUANTITY - For each listed waste entered in column A estimate the quantity of that waste that will be handled on an annual basis. For each characteristic or toxic contaminant entered in column A estimate the total annual quantity of all the non-listed waste(s) that will be handled which possess that characteristic or contaminant.

C. UNIT OF MEASURE - For each quantity entered in column B enter the unit of measure code. Units of measure which must be used and the appropriate codes are:

ENGLISH UNIT OF MEASURE	CODE
POUNDS	P
TONS	T

METRIC UNIT OF MEASURE	CODE
KILOGRAMS	K
METRIC TONS	M

If facility records use any other unit of measure for quantity, the units of measure must be converted into one of the required units of measure taking into account appropriate density or specific gravity of the waste.

D. PROCESSES

1. PROCESS CODES:

For listed dangerous waste: For each listed dangerous waste entered in column A select the code(s) from the list of process codes contained in Section III to indicate how the waste will be stored, treated, and/or disposed of at the facility.

For non-listed dangerous wastes: For each characteristic or toxic contaminant entered in Column A, select the code(s) from the list of process codes contained Section III to indicate all the processes that will be used to store, treat, and/or dispose of all the non-listed dangerous wastes that possess that characteristic o: toxic contaminant.

Note: Four spaces are provided for entering process codes. If more are needed: (1) Enter the first three as described above; (2) Enter "000" in the extreme ric box of Item IV-D(1); and (3) Enter in the space provided on page 4, the line number and the additional code(s).

2. PROCESS DESCRIPTION: If a code is not listed for a process that will be used, describe the process in the space provided on the form.

NOTE: DANGEROUS WASTES DESCRIBED BY MORE THAN ONE DANGEROUS WASTE NUMBER - Dangerous wastes that can be described by more than one Wa Number shall be described on the form as follows:

1. Select one of the Dangerous Waste Numbers and enter it in column A. On the same line complete columns B, C, and D by estimating the total annual quanti the waste and describing all the processes to be used to treat, store, and/or dispose of the waste.

2. In column A of the next line enter the other Dangerous Waste Number that can be used to describe the waste. In column D(2) on that line enter "included w above" and make no other entries on that line.

3. Repeat step 2 for each other Dangerous Waste Number that can be used to describe the dangerous waste.

EXAMPLE FOR COMPLETING SECTION IV *(shown in line numbers X-1, X-2, X-3, and X-4 below)* - A facility will treat and dispose of an estimated 900 pounds per of chrome shavings from leather tanning and finishing operation. In addition, the facility will treat and dispose of three non-listed wastes. Two wastes are corros only and there will be an estimated 200 pounds per year of each waste. The other waste is corrosive and ignitable and there will be an estimated 100 pounds per of that waste. Treatment will be in an incinerator and disposal will be in a landfill.

LINE NO.	A. DANGEROUS WASTE NO. (enter code)	B. ESTIMATED ANNUAL QUANTITY OF WASTE	C. UNIT OF MEASURE (enter code)	D. PROCESSES 1. PROCESS CODES (enter)	D. PROCESSES 2. PROCESS DESCRIPTION (if a code is not entered in D(1))
X-1	K 0 6 4	900	P	T 0 3 D 8 0	
X-2	D 0 0 2	400	P	T 0 3 D 8 0	
X-3	D 0 0 1	100	P	T 0 3 D 8 0	
X-4	D 0 0 2			T 0 3 D 8 0	*included with above*

Continued from page 2.
NOTE: Photocopy this page before completing if you have more than 26 wastes to list.

I.D. NUMBER *(entered from page 1)*

W	A	7	8	9	0	0	0	8	9	6	7

IV. DESCRIPTION OF DANGEROUS WASTES (continued)

LINE NO.	A. DANGEROUS WASTE NO. *(enter code)*	B. ESTIMATED ANNUAL QUANTITY OF WASTE	C. UNIT OF MEASURE *(enter code)*	D. PROCESSES 1. PROCESS CODES *(enter)*	D. PROCESSES 2. PROCESS DESCRIPTION *(if a code is not entered in D(1))*
1	D002	453,592,370	K	D84	Percolation
2	D007				
3	F001				
4	F002				
5	F003				
6	F005				
7	U210				
8	WT02				Included With Above
9					
10					
11					
12					
13					
14					
15					
16					
17					
18					
19					
20					
21					
22					
23					
24					
25					
26					

CONTINUE ON PE

Continued from the front.

IV. DESCRIPTION OF DANGEROUS WASTES (continued)

E. USE THIS SPACE TO LIST ADDITIONAL PROCESS CODES FROM SECTION D(1) ON PAGE 3.

The 300 Area Process Trenches received dangerous waste discharges from research and development laboratories in the 300 Area and from the fuels fabrication process. This waste consisted of state-only toxic, dangerous waste (WT02), discarded chemical product (U210), corrosive waste (D002), chromium (D007), spent halogenated solvents (F001, F002, and F003), and spent nonhalogented solvent (F005). Accurate records are unavailable concerning the amount of dangerous waste discharged to the trenches. The estimated annual quantity of waste (item IV.B.) reflects the total quantity of both regulated and nonregulated waste water that was discharged to the unit in one year.

V. FACILITY DRAWING : Refer to attached drawing.

All existing facilities must include in the space provided on page 5 a scale drawing of the facility *(see instructions for more detail)*.

VI. PHOTOGRAPHS Refer to attached photographs.

All existing facilities must include photographs *(aerial or ground-level)* that clearly delineate all existing structures; existing storage, treatment and disposal areas; a. sites of future storage, treatment or disposal areas *(see instructions for more detail)*.

VII. FACILITY GEOGRAPHIC LOCATION This information is provided on the attached drawings and photos.

LATITUDE *(degrees, minutes, & seconds)*	LONGITUDE *(degrees, minutes, & seconds)*

VIII. FACILITY OWNER

[X] A. If the facility owner is also the facility operator as listed in Section VII on Form 1, "General Information", place an "X" in the box to the left and skip to Sec below.

B. If the facility owner is not the facility operator as listed in Section VII on Form 1, complete the following items:

1. NAME OF FACILITY'S LEGAL OWNER	2. PHONE NO. *(area cod*

3. STREET OR P.O. BOX	4. CITY OR TOWN	5. ST.	6. ZIP CODE

IX. OWNER CERTIFICATION

I certify under penalty of law that I have personally examined and am familiar with the information submitted in this and all attached documents, and that based o inquiry of those individuals immediately responsible for obtaining the information, I believe that the submitted information is true, accurate, and complete. I am aw there are significant penalties for submitting false information, including the possibility of fine and imprisonment.

NAME *(print or type)*	SIGNATURE	DATE SIGNED
John D. Wagoner, Manager U.S. Department of Energy Richland Operations Office	John D. Wagoner	5/25/95

X. OPERATOR CERTIFICATION

I certify under penalty of law that I have personally examined and am familiar with the information submitted in this and all attached documents, and that based o inquiry of those individuals immediately responsible for obtaining the information, I believe that the submitted information is true, accurate, and complete. I am aw there are significant penalties for submitting false information, including the possibility of fine and imprisonment.

NAME *(print or type)*	SIGNATURE	DATE SIGNED
SEE ATTACHMENT		

CONTINUE ON P

X. OPERATOR CERTIFICATION

I certify under penalty of law that I have personally examined and am familiar with the information submitted in this and all attached documents, and that based on my inquiry of those individuals immediately responsible for obtaining the information, I believe that the submitted information is true, accurate, and complete. I am aware that there are significant penalties for submitting false information, including the possibility of fine and imprisonment.

John D. Wagoner

Owner/Operator
John D. Wagoner, Manager
U.S. Department of Energy
Richland Operations Office

5/25/95
Date

Joseph F. Nemec

Co-operator
Joseph F. Nemec, President
Bechtel Hanford, Inc.

4/28/95
Date

300 Area Process Trenches

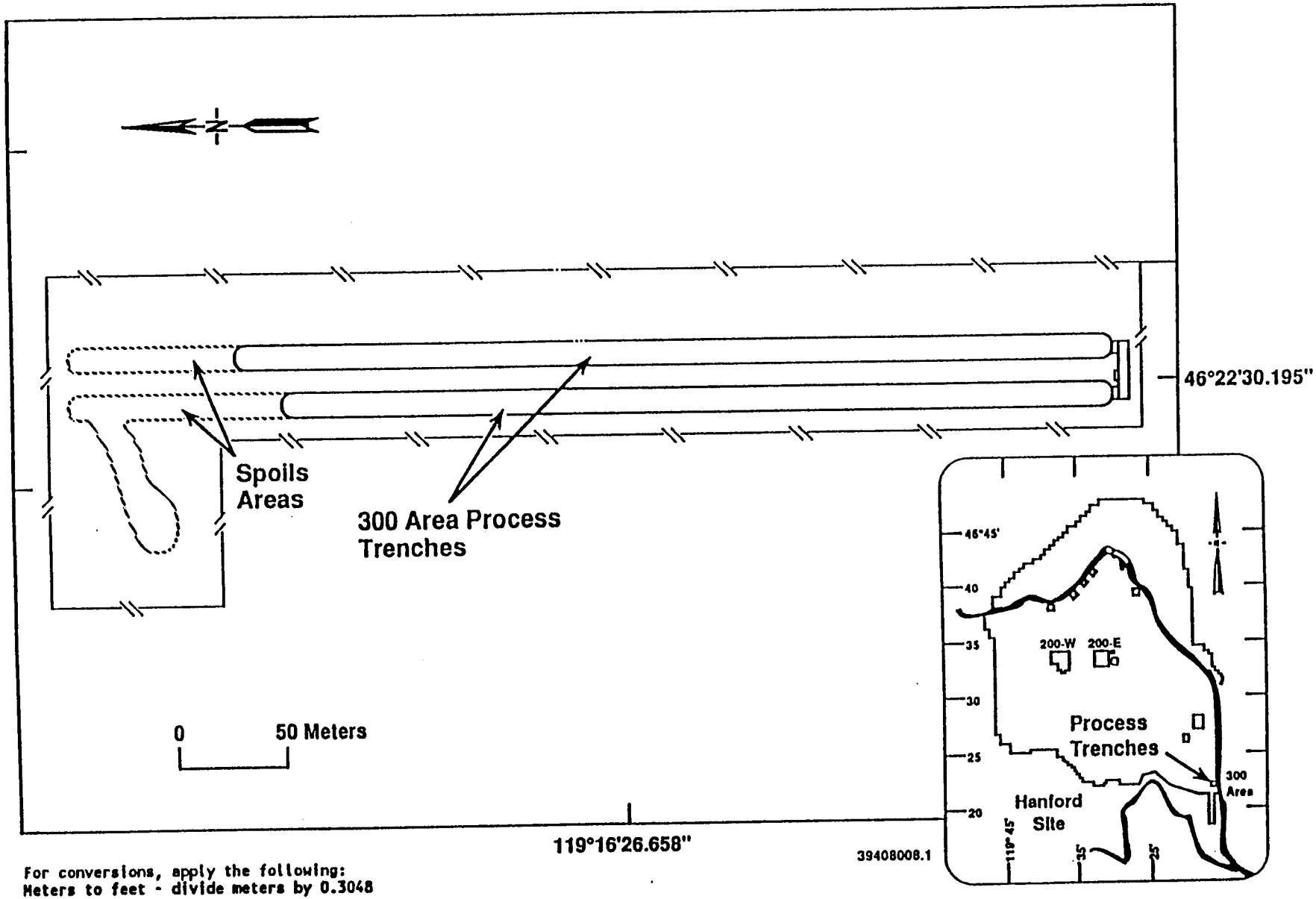

For conversions, apply the following:
Meters to feet - divide meters by 0.3048

300 AREA PROCESS TRENCHES

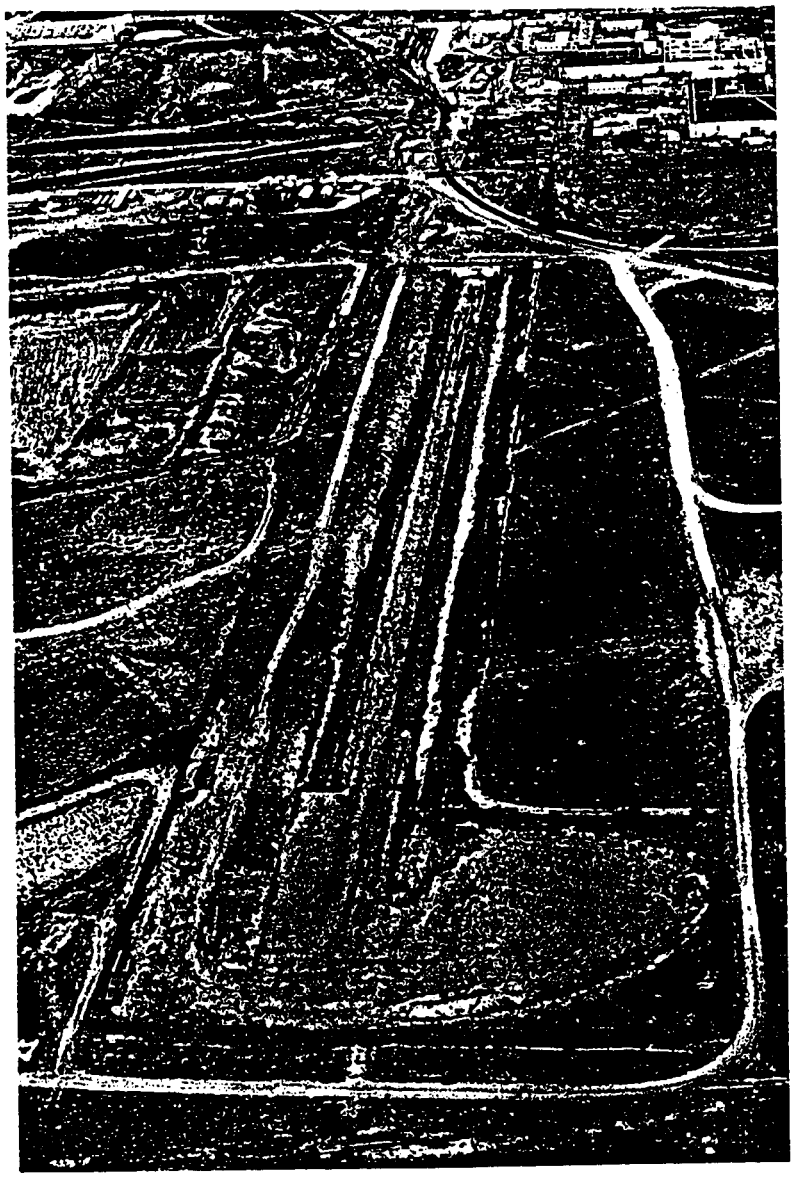

46°22'30.195"
119°16'26.658"

93050254.48CN
(PHOTO TAKEN 1993)

CONTENTS

1.0 INTRODUCTION 1-1
1.1 BACKGROUND 1-1
1.2 INTEGRATION OF RCRA AND CERCLA PROCESSES FOR CLOSURE OF THE 300 APT 1-1
1.2.1 CERCLA Remedial Action Process and TSD Unit Closure 1-2
1.2.2 Closure Plan Format 1-3
1.2.3 Basis for RCRA/CERCLA Integration 1-4
1.2.4 RCRA/CERCLA Regulator Interface 1-6
1.2.5 Considerations and Agreements for Integrated Closure 1-6
1.2.6 RCRA Group Responsibilities 1-7
1.3 300 APT MODIFIED CLOSURE/POSTCLOSURE PLAN CONTENTS 1-8
1.3.1 Unit Description (Chapter 2.0) 1-8
1.3.2 Process Information (Chapter 3.0) 1-8
1.3.3 Waste Characteristics (Chapter 4.0) 1-8
1.3.4 Groundwater Monitoring (Chapter 5.0) 1-8
1.3.5 Closure Performance Standards (Chapter 6.0) 1-8
1.3.6 Closure Activities (Chapter 7.0) 1-9
1.3.7 Postclosure Plan (Chapter 8.0) 1-9
1.3.8 References (Chapter 9.0) 1-9

1.0 INTRODUCTION

This chapter provides a brief summary of the contents of each chapter of this plan for the closure of the 300 Area Process Trenches (300 APT) treatment, storage, and/or disposal (TSD) unit. It also provides background information for this unit and discusses how its closure will be integrated with the remedial action for the *Comprehensive Environmental Response, Compensation, and Liability Act of 1980* (CERCLA) 300-FF-1 Operable Unit.

1.1 BACKGROUND

The Hanford Site, located northwest of the city of Richland, Washington, houses reactors, chemical-separation systems, and related facilities used for the production of special nuclear materials, as well as for activities associated with nuclear energy development. Activities are centralized in numerically designated areas on the Hanford Site. One such area is the 300 Area located approximately 4.8 km (3 mi) north of the city of Richland.

The 300 APT is located within the 300 Area of the Hanford Site. This area contained reactor fuel fabrication facilities and research and development laboratories. The 300 APT was constructed and began operations in 1975 as the 316-5 Process Trenches. Effluent was discharged to the trenches by way of the 300 Area process sewer system, which has been the sole source of effluent for the 300 APT. The 316-5 Process Trenches gained *Resource Conservation and Recovery Act of 1976* (RCRA) interim status as the 300 APT TSD unit on November 11, 1985. The unit has been administratively closed to discharges of dangerous waste since 1985.

The 300 APT was permanently removed from service in December 1994 in support of the *Hanford Federal Facility Agreement and Consent Order* (Tri-Party Agreement) Milestone M-17-10 for Project L045H, Treated Effluent Disposal Facility (TEDF) (Ecology et al. 1994). This closure plan provides for unit closure that will be conducted pursuant to the final status standards of the *Washington Administrative Code* (WAC), Chapter 173-303-610, "Dangerous Waste Regulations," and Title 40, *Code of Federal Regulations* (CFR), Part 270.1.

The 300 APT TSD unit is operated by the U.S. Department of Energy, Richland Operations Office (DOE-RL) and co-operated by Bechtel Hanford, Inc. (BHI). Although the U.S. Government holds legal title to this facility, the DOE-RL, for purposes of the RCRA, is considered the legal owner of the facility under existing U.S. Environmental Protection Agency (EPA) interpretive regulations (51 CFR 7722).

1.2 INTEGRATION OF RCRA AND CERCLA PROCESSES FOR CLOSURE OF THE 300 APT

This section describes the CERCLA remedial action process at the Hanford Site and discusses why and how the RCRA and CERCLA programs can achieve closure of the 300 APT TSD unit.

1.2.1 CERCLA Remedial Action Process and TSD Unit Closure

In 1989, pursuant to its authority under CERCLA, the EPA placed the 300 Area on the National Priorities List, which is contained within Appendix B of the *National Oil and Hazard Substances Pollution Contingency Plan*. In 1989, the DOE-RL, Washington State Department of Ecology (Ecology), and the EPA issued the Tri-Party Agreement (Ecology et al. 1994) governing CERCLA remedial actions at the Hanford Site. The Tri-Party Agreement governs cleanup of Hanford Site areas under CERCLA regulations and identifies cleanup areas as operable units. The 300-FF-1 Operable Unit is one such operable unit that addresses waste and contaminated media within its boundaries. The 300 APT TSD unit is within the boundaries of the 300-FF-1 Operable Unit. Another operable unit is the 300-FF-5, which addresses 300 Aggregate Area groundwater concerns. The 300-FF-5 Operable Unit is addressed in this plan because the operation of the 300 APT has affected groundwater. The CERCLA remedial action process for these sites as past-practice units is defined in the Tri-Party Agreement Action Plan (Sections 7.1 through 7.3) (Ecology et al. 1994).

The Tri-Party Agreement Action Plan also addresses the requirements of RCRA in guiding the closure of RCRA TSD units at the Hanford Site. CERCLA regulations normally only govern cleanup activities for sites contaminated before the effective date of RCRA regulations (i.e., November 19, 1980). However, in accordance with Section 3.3 and Appendix B of the Tri-Party Agreement Action Plan, surface impoundments, such as the 300 APT RCRA TSD unit, are assigned to the past-practice operable unit that they are located in for investigation and management of closure activities. The 300 APT has been assigned to the 300-FF-1 Operable Unit. This will ensure consistency of physical actions for the units (Ecology et al. 1994).

The regulatory agency for RCRA TSD units is Ecology. The lead regulatory agency for the 300-FF-1 and 300-FF-5 CERCLA operable units is the EPA. However, regulatory responsibilities for this integrated activity will be shared by RCRA and CERCLA regulators.

The initial stage of a CERCLA site remedial action is the remedial investigation/feasibility study (RI/FS) process. The 300-FF-1 RI/FS process, under which the RCRA unit was investigated, was performed in accordance with Tri-Party Agreement Milestone M-15-03 using the EPA guidance provided in *Guidance for Conducting Remedial Investigations and Feasibility Studies Under CERCLA* (EPA 1988). The RI/FS process is shown in Figure 7-3 of the Tri-Party Agreement (Ecology et al. 1994). This process requires a CERCLA remedial action for a record of decision (ROD). The ROD for the 300-FF-1 Operable Unit will reflect regulator decisions regarding CERCLA operable unit and TSD unit remediation methodology and cleanup levels.

Preparation of the *Phase III Feasibility Study Report for the 300-FF-1 Operable Unit* from which the Proposed Plan and ROD will evolve occurs as the last step in the RI/FS process (DOE-RL 1995b). The 300-FF-1 Phase III FS identifies the dominant risk factors, screens remedial alternatives, and provides preliminary remediation goals (PRGs) as numerical cleanup levels. The CERCLA documents completed in support of the RI/FS include the following:

- *Remedial Investigation/Feasibility Study Work Plan for the 300-FF-1 Operable Unit, Hanford Site, Richland, Washington* (DOE-RL 1992c)

- *Phase I Remedial Investigation Report for the 300-FF-1 Operable Unit* (DOE-RL 1993d)

- *Phase I and II Feasibility Study for the 300-FF-1 Operable Unit* (DOE-RL 1993c)
- *Phase II Remedial Investigation Report for the 300-FF-1 Operable Unit: Physical Separation of Soils Treatability Study* (DOE-RL 1994c)
- *Phase I Remedial Investigation Report for the 300-FF-5 Operable Unit* (DOE-RL 1993e)
- *Expedited Response Action Assessment for the 316-5 Process Trenches* (DOE-RL 1992a)
- *Phase III Feasibility Study Report for the 300-FF-1 Operable Unit* (DOE-RL 1995b)
- *Proposed Plan for the 300-FF-1 and 300-FF-5 Operable Units* (DOE-RL 1995c).

Implementation of the ROD is divided into three phases. These phases and their primary documents are described in Sections 7.3.9 through 7.3.11 of the Tri-Party Agreement Action Plan (Ecology et al. 1994). The phases are the remedial design phase, remedial action phase, and operation and maintenance (O&M) phase. The primary documents required for these phases are the remedial design report, remedial action work plan, and the O&M work plan. All of these documents require regulator approval. A more detailed list of CERCLA remedial action documents is presented in Table 9-3 of the Tri-Party Agreement Action Plan (Ecology et al. 1994). The schedule for each phase will be included in its primary document and reflected in the operable unit work schedule located in Appendix D of the Tri-Party Agreement Action Plan (Ecology et al. 1994).

The remedial action phase and the remedial action work plan will provide the detailed information required by the CERCLA process to implement actions developed under the remedial design for remediation at the 300 APT. This information will include remediation methodology, cleanup levels, waste management and disposal methods, and sampling and analysis. The O&M phase and the O&M work plan will provide information regarding site inspections, monitoring, and maintenance required after remediation activities.

1.2.2 Closure Plan Format

The Phase III FS report (DOE-RL 1995b) was provided to CERCLA regulators August 15, 1994, in accordance with Tri-Party Agreement Milestone M-15-03C. This closure plan was provided to Ecology on August 15, 1994, in accordance with Tri-Party Agreement Milestone M-20-32 (Ecology et al. 1994).

The RCRA closure plan is separate, but coordinated with CERCLA documents. The closure plan discusses how CERCLA operable unit remedial options integrate with TSD unit closure options presented in regulations governing RCRA closures while meeting the requirements of WAC 173-303-610. Much of the TSD unit information required to satisfy WAC 173-303-610 closure plan content requirements (e.g., background information, TSD unit description, waste inventory) is taken from CERCLA documents for the 300-FF-1 Operable Unit RI/FS process.

Information required for Chapters 6.0 (Closure Strategy and Performance Standards) and 7.0 (Closure Activities) of the closure plan that is not available from published CERCLA predecessor documents is obtained through coordination with the concurrently developed CERCLA Phase III FS Report

(DOE-RL 1995b). The CERCLA 300-FF-1 remedial action activities in support of TSD unit closure will be incorporated into the closure plan during revision intervals coordinated with the CERCLA review process presented in Figure 9-1 of the Tri-Party Agreement Action Plan (Ecology et al. 1994).

1.2.3 Basis for RCRA/CERCLA Integration

The RCRA/CERCLA integration for closure of the 300 APT is being pursued as a Tri-Party Agreement-driven activity that is physically appropriate and programmatically feasible.

1.2.3.1 Physical Appropriateness. The integration of RCRA/CERCLA activities ensures physical consistency of these activities by protecting human health and the environment. Integration capitalizes on CERCLA's prior history of 300 APT remediation. It also allows the 300 APT cleanup to use the same cleanup levels, remediation technology, and waste handling methods as the operable unit to capitalize on the economies of a one-time, larger scale CERCLA operable unit operation.

The Tri-Party Agreement Action Plan requires that the closure of TSD units must consider all hazardous substances, including radionuclides. The Tri-Party Agreement Action Plan allows that radionuclides not addressed under TSD unit closure be addressed under CERCLA authority. The operable unit will address pervasive radionuclides at the TSD unit (Section 4.3.3) in a manner that will effectively mitigate risk from dangerous waste constituents (DOE-RL 1995b). Integration of the two units' activities will ensure adherence to Tri-Party Agreement Action Plan requirements regarding cleanup of all hazardous substances.

The CERCLA group and CERCLA regulations have a history of involvement with 300 APT remediation dating from the 316-5 Process Trenches Expedited Response Action (ERA) in 1991. The ERA was performed under CERCLA authority with regulator approval to mitigate environmental hazards and to facilitate the RI/FS process for the 300-FF-1 Operable Unit CERCLA remedial action. The ERA is discussed in detail in Section 2.4. The CERCLA operable unit involvement in 300 APT remediation will continue after the TSD unit has ceased operations as a logical extension of prior remedial activities at the 300 APT.

If treatment by soil washing is the selected remedial alternative, this activity will require both units to use the same cleanup levels and waste disposal methods. The soil washing unit will be remediating both RCRA and CERCLA unit soils simultaneously, and the remediated soils will be used interchangeably as backfill for both units. Separation of the treatment waste or product according to unit will not be practical.

Activity integration is enhanced by coinciding submittal dates for the RCRA closure plan and the Phase III FS report (DOE-RL 1995b) presented in the Tri-Party Agreement, Appendix D (Ecology et al. 1994). The closure plan approval schedule presented in Figure 9-2 of the Tri-Party Agreement Action Plan coordinates closely with the scheduled arrival date of the ROD of August 1995. This is also the approximate due date to regulators of Revision 1 of the closure plan.

1.2.3.2 RCRA and CERCLA Program Equivalency. The WAC 173-303-610 closure process and the CERCLA remedial action process are functionally equivalent for TSD unit closure purposes. Functional equivalency ensures equal protection of human health and the environment, although unit processes may be different.

Although some differences exist in RCRA and CERCLA regulations, such differences are not significant regarding the cleanup levels of contaminants of concern and the calculation of cleanup levels. One difference is that CERCLA cleanup at the Hanford Site uses the risk assessment methodology of Hanford Site Baseline Risk Assessment Methodology (HSBRAM) to identify contaminants of concern and to calculate cleanup levels based on risk. Another difference is waste management practices (Section 1.2.5).

Both unit processes are driven by regulation to require protection of human health and the environment and to adhere to appropriate state and federal regulations as threshold criteria in making remedial action decisions. Section 121 of CERCLA requires adherence to applicable or relevant and appropriate requirements (ARARs). ARARs include but are not limited to "Dangerous Waste Regulations" (WAC 173-303), *Model Toxics Control Act* (MTCA) Method C cleanup levels (WAC 173-340), and surface water standards of WAC 173-201A (DOE-RL 1995b). In accordance with WAC 173-303-610, the closure plan must reflect adherence to state and federal laws to meet performance standards for protection of human health and the environment, minimization of future maintenance, and return of the land to maximum usefulness. Further, both units require approval by their respective regulators of remedial action documentation.

The RCRA and CERCLA processes provide essentially the same information in documenting how their units will be closed. The closure plan identifies how closure will be conducted; estimated maximum inventory of waste (i.e., nature and extent of contamination); and the methods for removal, transport, treatment, storage, and disposal of contaminated unit media. Also required for RCRA surface impoundments is information regarding unit maintenance and monitoring if waste is left in place after closure. The CERCLA RI/FS site characterization and risk assessment are providing this information by identifying TSD unit contaminants of concern, volumes of contaminated media, remedial action objectives, and remedial alternatives. Other CERCLA considerations equating to RCRA performance standards of WAC 173-303-610 are short- and long-term effectiveness; reduction in toxicity, mobility, and volume; and implementability and cost.

Both units calculate cleanup levels using methodology that provides for equivalent protection of human health and the environment based on risk. The RCRA process implements MTCA formulas for the calculation of health-based levels (HBLs) based on unit risk. The CERCLA process uses HSBRAM to establish cleanup levels for soil and groundwater appropriate to a conservative calculation of actual risk. The HSBRAM (DOE-RL 1993b) formulas for calculating soil HBLs are taken from MTCA and so are equally protective of human health and the environment. However, two differences exist between MTCA and HSBRAM that will actually enhance the RCRA closure. One significant difference is that HSBRAM calculates risk for radionuclides (the CERCLA remediation driver) whereas MTCA does not. However, because the CERCLA unit could use a dose-based approach (Section 4.3.3) that equates to a risk-based approach to calculating radionuclide cleanup levels, this difference becomes less significant. Another difference is that MTCA does not have the environmental evaluation component of risk assessment whereas HSBRAM provides for this. Consequently, HSBRAM should be acceptable for use in support of TSD unit closure. The revision of HSBRAM that is in effect at the time of unit closure will be used.

The RCRA closure process and the CERCLA remedial action process require approval by their respective regulators. Ecology must approve the closure plan through modification of Hanford Facility Part B Permit, and EPA must approve primary remedial action documents (Section 1.2.1). The operable unit and TSD unit final remedial alternative and the specific cleanup goals are approved

through the proposed plan and the ROD originating from CERCLA regulators. However, ROD specifications will be approved by Ecology and the EPA.

1.2.4 RCRA/CERCLA Regulator Interface

Under the lead regulatory agency concept described in Appendix C of the Tri-Party Agreement Action Plan (Ecology et al. 1994), the EPA is the lead for this integrated activity. The EPA is responsible for overseeing the activities covered by the Tri-Party Agreement Action Plan, including approval of remedial action documents, preparation of a ROD, and ensuring that the requirements of the Tri-Party Agreement Action Plan are met. However, EPA and Ecology will retain their respective legal authorities and shall make decisions pursuant to those authorities (Ecology et al. 1994). The TSD unit closure must satisfy RCRA regulators because TSD closure requirements (WAC 173-303-610) are the responsibility of the RCRA regulators and the RCRA closure plan. To ensure this, CERCLA unit actions must consider RCRA closure requirements and the closure plan must accurately document planned CERCLA remedial actions at the TSD unit.

The effectiveness of RCRA and CERCLA integration for closure of the 300 APT will remain dependent on the continued communication and teamwork of RCRA and CERCLA unit workers and regulators to the point of 300 APT closure. In accordance with the Tri-Party Agreement Action Plan (Sections 8.1 and 8.2), TSD unit and operable unit project and unit managers will meet regularly to discuss progress, address technical and regulatory issues, and review activity plans for their respective units. The effort to coordinate regulator decisionmaking will rely on this system of compulsory meetings. RCRA regulators shall be informed of CERCLA unit manager meetings and be involved in decisions pertaining to the RCRA unit closure and shall be placed on distribution for CERCLA information and documents pertaining to the RCRA unit closure. CERCLA unit managers shall also be informed of RCRA unit meetings and be placed on distribution of information pertaining to the RCRA unit closure. RCRA regulators must also be integrally involved with the CERCLA data quality objective (DQO) process for sampling and analysis performed under the authority of the operable unit at the TSD unit.

1.2.5 Considerations and Agreements for Integrated Closure

1.2.5.1 RCRA Permitting Considerations. If soil washing, an onsite soil treatment process, is the selected remedy, it will be performed outside of the 300 APT boundaries, but will remain within the 300-FF-1 Operable Unit. Consequently, 300 APT Part A forms will not require revision to reflect new onsite treatment. Further, the treatment unit requires no RCRA permit because it will be considered a temporary unit as a CERCLA ARAR.

1.2.5.2 Regulator Agreements. Administrative and substantive differences can exist between RCRA and CERCLA regulations regarding management and disposal of dangerous waste. For example, the WAC 173-200 90-day waste accumulation limit is a RCRA administrative limit that is not pertinent to CERCLA onsite actions. The CERCLA unit will manage TSD unit waste simultaneously with operable unit waste. The CERCLA unit may dispose of all CERCLA waste meeting proposed waste acceptance criteria at the Environmental Restoration Disposal Facility (ERDF) or at the North Process Pond location as remediation waste.

RCRA and CERCLA unit regulators can determine through issuance of the 300-FF-1 ROD and through conditions identified in the Hanford Facility Dangerous Waste Permit modification that all waste generated by CERCLA during the 300-FF-1 Operable Unit remedial action, including TSD unit closure waste, can be disposed at ERDF or another non-RCRA location. Technical standards, maintenance, and institutional controls will be required for these locations. These provisions would ensure that the disposal location offers protection of human health and the environment for TSD unit waste equivalent to disposal in a RCRA-permitted unit.

Regulators can allow disposal of TSD waste at the ERDF by recognizing that data collected indicate that TSD unit soils, although containing RCRA contamination above clean closure levels, are not designated as dangerous waste under WAC 173-303-070 through 104. Although listed wastes have been discharged to the unit, such waste currently exists in unit soils at concentrations below MTCA Method B residential, health-based cleanup levels. As proposed in Section 4.3.1 and based on Ecology guidance (Eaton 1993), a contained-in determination was requested from regulators to remove the listing from pre-treatment soils based on these low concentrations. Ecology denied a request for removal of the listed waste codes based on the fact that such concentrations were above 100 times groundwater limits. However, Ecology granted a contained-in based on contingent management. Contingent management includes two options that remove the listed waste code: disposal to the ERDF or a RCRA-compliant landfill. This will allow disposal of TSD unit soils at the ERDF.

1.2.6 RCRA Group Responsibilities

To ensure that CERCLA activities result in a viable TSD unit closure, RCRA document preparers and/or regulators will do the following:

- Ensure that the TSD unit Part A Permit Application, Form 3 is true, accurate, and complete
- Prepare a closure plan that provides for closure satisfying all WAC 173-303-610 closure performance standards
- Remain involved with the decisionmaking processes for CERCLA unit activities to effectively concur with the operable unit
  - Remediation activities for the TSD unit
  - Waste management methodology (to ensure that RCRA unit waste is managed and disposed appropriately)
  - Cleanup levels that are shared with the TSD unit
  - Sampling and analysis that will verify the absence of contamination to the specified cleanup levels at the TSD unit
  - Post-remediation inspections, maintenance, and monitoring (including groundwater monitoring)
- Update the closure plan to reflect changes in CERCLA activities that affect the TSD unit

- Incorporate the 300 APT closure/postclosure plan into the Hanford Facility Part B Permit

- Provide certification, by an independent professional engineer registered in the state of Washington, that the TSD unit was closed in accordance with the closure plan.

1.3 300 APT MODIFIED CLOSURE/POSTCLOSURE PLAN CONTENTS

The 300 APT modified closure/postclosure plan presents a description of the 300 APT, the history of waste managed, and the approach that will be followed to close the unit. A description of each chapter is provided in the following sections.

1.3.1 Unit Description (Chapter 2.0)

This chapter provides a brief description of the Hanford Site and the location and description of the 300 APT. Information on Hanford Site security also is provided.

1.3.2 Process Information (Chapter 3.0)

This chapter describes how the 300 APT processed waste and explains the overall waste treatment system.

1.3.3 Waste Characteristics (Chapter 4.0)

This chapter discusses the waste inventory and characteristics of the waste treated at the 300 APT. It also describes the contamination remaining in TSD unit soils and the risks from this contamination.

1.3.4 Groundwater Monitoring (Chapter 5.0)

This chapter discusses the current groundwater monitoring program established to characterize and monitor groundwater contamination in the area of the 300 APT.

1.3.5 Closure Performance Standards (Chapter 6.0)

This chapter discusses the closure strategy, performance standards for protection of health and the environment, and the steps to unit closure.

1.3.6 Closure Activities (Chapter 7.0)

This chapter discusses the physical remedial activities required to implement closure strategy and the sampling and analysis required to verify closure. This chapter also presents a closure schedule and closure certification.

1.3.7 Postclosure Plan (Chapter 8.0)

This chapter outlines postclosure care provisions if this TSD unit, as anticipated, enters a modified closure care period before final closure.

1.3.8 References (Chapter 9.0)

References cited throughout this closure plan are listed in this chapter. All references listed here that are not available from other sources will be made available for review, upon request, to any regulatory agency or public commentor. References can be obtained by contacting the following:

Administrative Records Specialist
Public Access Room H6-08
Westinghouse Hanford Company
P.O. Box 1970
Richland, Washington 99352

CONTENTS

2.0 UNIT DESCRIPTION 2-1
2.1 GENERAL HANFORD SITE DESCRIPTION 2-1
2.2 HANFORD SITE RCRA FACILITY DESCRIPTION 2-1
2.3 300 APT UNIT DESCRIPTION 2-1
2.4 316-5 PROCESS TRENCHES ERA 2-2
2.5 SECURITY 2-3
2.5.1 24-Hour Surveillance 2-3
2.5.2 Barrier and Means to Control Entry 2-3

APPENDICES:

2A PHOTOGRAPHS . . . . . APP 2A-i

FIGURES:

2-1. Hanford Site F2-1
2-2. 300 APT, Pre- and Post-ERA F2-2
2-3. 300 Area F2-3
2-4. 300-FF-1 Operable Unit F2-4
2-5. 300 APT Elevation Contouring (DOE-RL 1992a) F2-5
2-6. 300 APT Elevation Section View F2-6
2-7. 316-5 Pre- and Post-ERA Excavation Sampling Locations F2-7

2.0 UNIT DESCRIPTION

2.1 GENERAL HANFORD SITE DESCRIPTION

In early 1943, the U.S. Army Corps of Engineers selected the Hanford Site as the location for reactor, chemical separation, and related activities for the production and purification of plutonium. The Hanford Site (Figure 2-1) covers approximately 1,450 km^2 (560 mi^2) of semiarid land located adjacent to the city of Richland, Washington.

2.2 HANFORD SITE RCRA FACILITY DESCRIPTION

The Hanford Facility is a single RCRA facility identified by the EPA/State Identification Number WA7890008967 that consists of more than 60 TSD units conducting dangerous waste management activities. These TSD units are included in the *Hanford Site Dangerous Waste Part A Permit Application* (DOE-RL 1988). The Hanford Facility consists of all contiguous land and structures, other appurtenances, and improvements on the land used for recycling, reusing, reclaiming, transferring, storing, treating, or disposing of dangerous waste, which for the purposes of the RCRA, is owned by the U.S. Government and operated by the DOE-RL (excluding land north and east of the Columbia River, river islands, land owned or used by the Bonneville Power Administration, land leased or under lease obligation to the Washington Public Power Supply System, and land owned by or leased to Washington State).

2.3 300 APT UNIT DESCRIPTION

The 300 APT (Figure 2-2) began operations March 16, 1975. This unit was removed from service in December 1994; permanent isolation was performed in January 1995. This unit is located within the 300 Area (Figure 2-3) of the Hanford Site. The unit is approximately 61 m (200 ft) north of the main 300 Area perimeter fence and approximately 300 m (1,000 ft) west of the Columbia River. The unit is also within the boundary of the 300-FF-1 CERCLA Operable Unit (Figure 2-4). The 300 APT is located above the 300-FF-5 groundwater operable unit, which encompasses all 300 Area groundwater.

The 300 APT is surrounded by a 1.8-m (6-ft) metal wire fence that defines the boundaries of the unit requiring RCRA closure. The unit includes approximately 6.1 m (20 ft) of process sewer piping to the unit fence. However, for purposes of RCRA remediation, the boundary of the unit is described by the extent of contamination from RCRA unit constituents (WAC 173-303-650). The extent of RCRA contamination is discussed in Section 4.3. The fence has one locked gate at the south end of the unit and is posted with warning signs. The area from the 300 APT fence to the edge of the trenches is unpaved, naturally vegetated terrain approximately 2 m (6 ft) higher than the top of the berm.

The 300 APT consists of two parallel, unlined trenches running north and south separated by a narrow earthen berm (Appendix 2A, Figure 2A-2). The east trench is approximately 366 m (1,200 ft) long, and the west trench is approximately 344 m (1,130 ft) long. Both trenches are approximately 3.5 m (11 ft) deep, 3 m (10 ft) wide at the bottom, and 10 m (32 ft) wide at the top. Trench bottoms slope gently to the north and are approximately 3.4 m (11 ft) above the water table. Until 1991, there was a 30- by 50- by 3-m (90- by 150- by 9-ft) depression located at the northwest corner of the west trench.

This area received effluent because of slope failure. In 1990, the depression was separated from the west trench by a berm needed to support a birdscreen placed over the trench. The north 91 m (300 ft) of the original trenches, including the depression, is now an impoundment area for covered low-level radioactive and low-level mixed waste soils generated during the 300 APT ERA excavation activities (Section 2.4). Elevational contouring of the trenches, as currently configured, is presented in Figure 2-5.

A concrete weir box is located at the south end of the 300 APT. Process sewer effluent reached the unit through 24-in.-diameter 300 Area Process Sewer System piping connected to the weir box. The weir box measures 21.3 m (70 ft) long (east/west), 3 m (10 ft) high, and 3 m (10 ft) wide. The box has two sluice gates that, in the past, allowed the trenches to be operated alternately. In 1992, the west trench was permanently removed from service. The east trench was removed from service in December 1994. Effluent flowed through the east gate, down a concrete apron, and into the trench (Figure 2-6). There is no effluent outlet; all water either infiltrated the soil column or evaporated.

The trenches were designed to dispose of up to 11,370,000 L/day (3 million gal/day) of effluent, but received only approximately 1.9 million L/day (500,000 gal/day). During the last 2 years of operation, the liquid discharged to the east trench extended only about 6 m (20 ft) from the weir box before percolating into the soil.

From the beginning of operations in 1975 until October 1993, a continuous, composite sampler was located at the headwork to analyze process sewer effluent at the point of discharge to the environment. Since 1993, process sewer effluent has been analyzed outside the unit. The results of effluent sampling and analysis are discussed in Chapter 3.0.

2.4 316-5 PROCESS TRENCHES ERA

In 1991, at regulator request, an ERA was undertaken at the 316-5 Process Trenches (300 APT). This action arose from regulator concerns based on analytical results of trench sampling performed in 1986. These analytical results are reported in Table 15 of the RI/FS work plan for the 300-FF-1 Operable Unit (DOE-RL 1992c). The data identified the presence of radioactive and inorganic contaminants (primarily heavy metals) in the trench soil at levels potentially harmful to groundwater and to the nearby Columbia River. These data were used only to guide ERA planning. The ERA is presented as a portion of the unit description because it changed the physical configuration of the unit along with changing contaminant distribution within the unit.

The ERA was initiated under the authority of the Tri-Party Agreement Action Plan (Section 6.4) as an interim action pending final cleanup activities for the 300-FF-1 Operable Unit (Ecology et al. 1994). ERA planning is documented in the *Expedited Response Action Proposal for the 316-5 Process Trenches* (DOE-RL 1992b), and ERA results are documented in the *Expedited Response Action Assessment for the 316-5 Process Trenches* (DOE-RL 1992a).

The ERA objective was to reduce the potential migration of contaminants to groundwater. The specific ERA goal was to reduce the measurable level of radiation in the trenches to less than three times the upper tolerance limit of background. This was accomplished by removing contaminated sediments, using them to fill in the north end of the trenches, and immobilizing them. The process of mitigating

the risk presented from pervasive radionuclides also mitigated the threat from the dangerous, inorganic constituents.

Until the ERA, the trenches were approximately 457 m (1,500 ft) long, 3 m (10 ft) wide at the bottom, and 9 m (30 ft) wide at the top with a 27- by 46- by 2.7-m- (90- by 150- by 9-ft) deep depression existing at the northwest corner of the west trench (Appendix 2A, Figure 2A-1). The ERA uniformly excavated about 0.3 m (1 ft) of chemically and radioactively contaminated soil from the sides and about 1.3 m (4 ft) from the bottoms of each trench. The ERA physically changed the configuration of the trenches to their current length, depth, and width, lowered the berm, and filled in the depression (Appendix 2A, Figure 2A-2).

Approximately 5,400 m^3 (7,000 yd^3) was removed from each trench and relocated within the 300 APT according to their level of radioactivity. The less radioactively contaminated sediments (less than 2,000 cpm) were relocated to the north end of each trench. The more radioactively contaminated sediments (greater than 2,000 cpm) were consolidated in the depression located at the northwest corner of the west trench. The contaminated sediments were isolated from the effluent and then covered with a plastic barrier and a layer of clean aggregate. Areas that received excavated process trench materials are identified in this closure plan as the spoils areas.

As a portion of the ERA, pre- and post-excavation samples were taken as shown in Figure 2-7. These sampling activities are described in Section 3.3 of the ERA assessment (DOE-RL 1992a). ERA analytical results are summarized in Appendix 7D. The results of ERA sampling were used by the 300-FF-1 CERCLA RI/FS as the basis for TSD unit risk assessment. These results indicate that the ERA successfully reduced trench contamination at all areas of the trenches other than the spoils areas. Contamination remaining at the trenches after the ERA is discussed in Chapter 4.0.

2.5 SECURITY

2.5.1 24-Hour Surveillance

The entire Hanford Site is a controlled-access area. The Hanford Site maintains around-the-clock surveillance to restrict unauthorized access for the protection of the public and of government property, classified information, and special nuclear materials. The Hanford Patrol maintains a continuous presence of protective force personnel to provide Hanford Site security.

2.5.2 Barrier and Means to Control Entry

Within the Hanford Site are operational areas to which access is restricted. The 300 Area is one such operational area and is the location of the 300 APT. There is no staffed checkpoint through which access to the 300 Area or to the 300 APT is gained. However, unknowing entry by individuals to the 300 Area and, subsequently to the vicinity of the unit, is administratively prevented by postings on access roads that allow authorized access only. Authorized personnel are those individuals with a DOE-issued security identification badge indicating the appropriate authorization. Such personnel are subject to a search of items carried into or out of these areas.

To preclude unknowing access into the 300 APT and to minimize the possibility of entry by animals or by unauthorized individuals, the unit is surrounded by a 1.8-m- (6-ft) high metal wire fence. The fence has one locked gate at the south end of the unit. Also posted at the unit are placards that read "Danger - unauthorized personnel keep out."

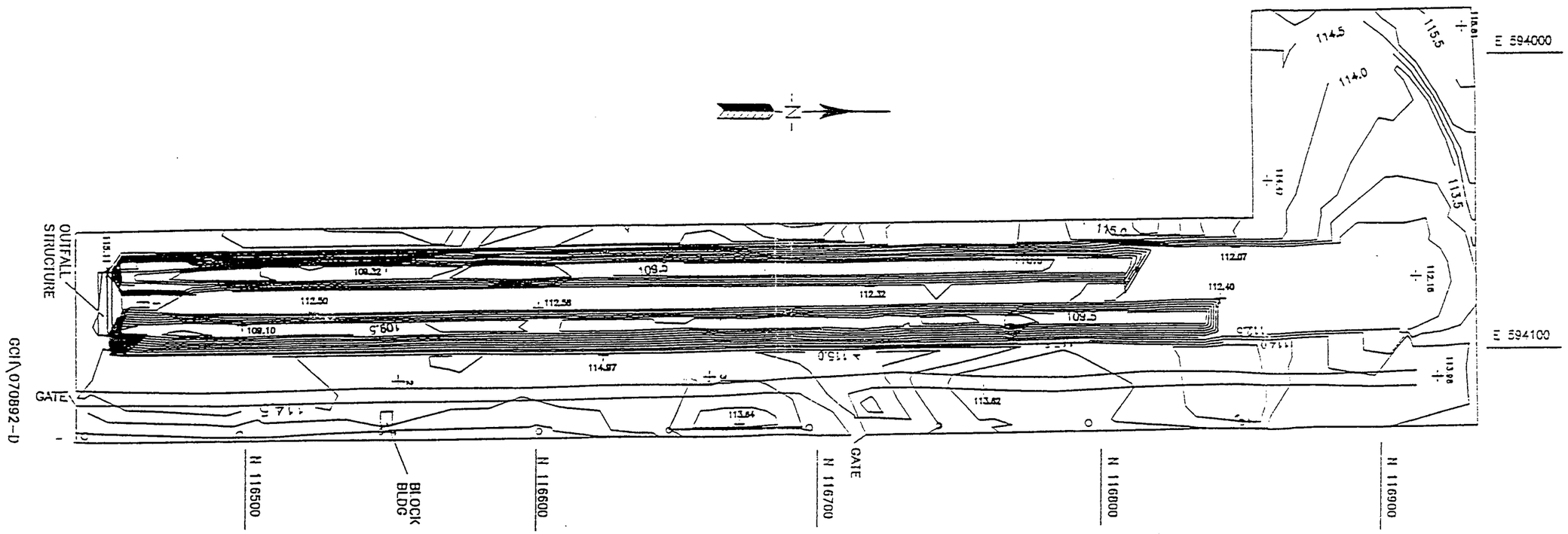

NOTE: Elevation is in meters.

Figure 2-5. 300 APT Elevation Contouring (DOE-RL 1992a).

Figure 2-6. 300 APT Elevation Section View.
Source: WHC (1988).

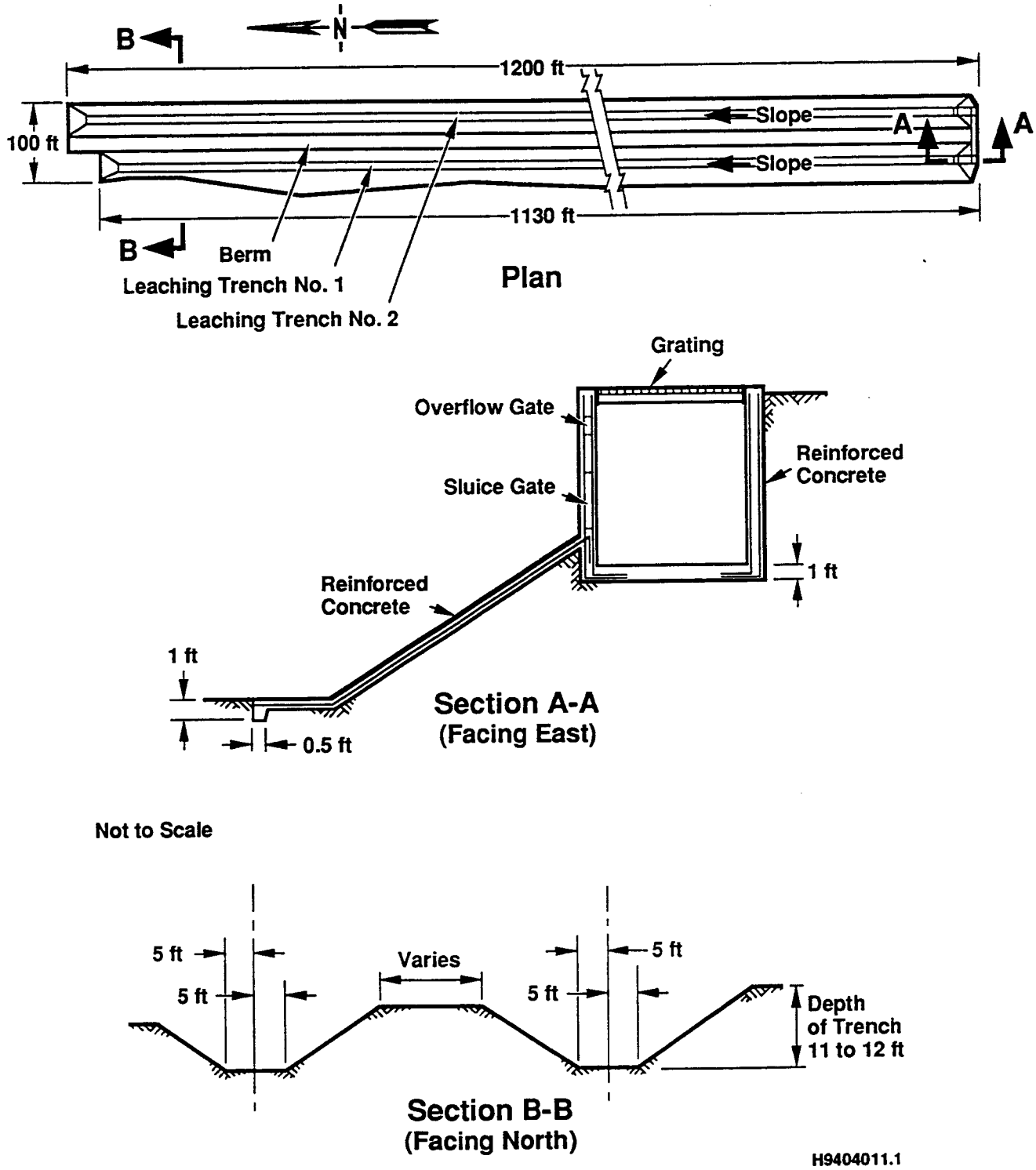

Figure 2-7. 316-5 Pre- and Post-ERA Excavation Sampling Locations.

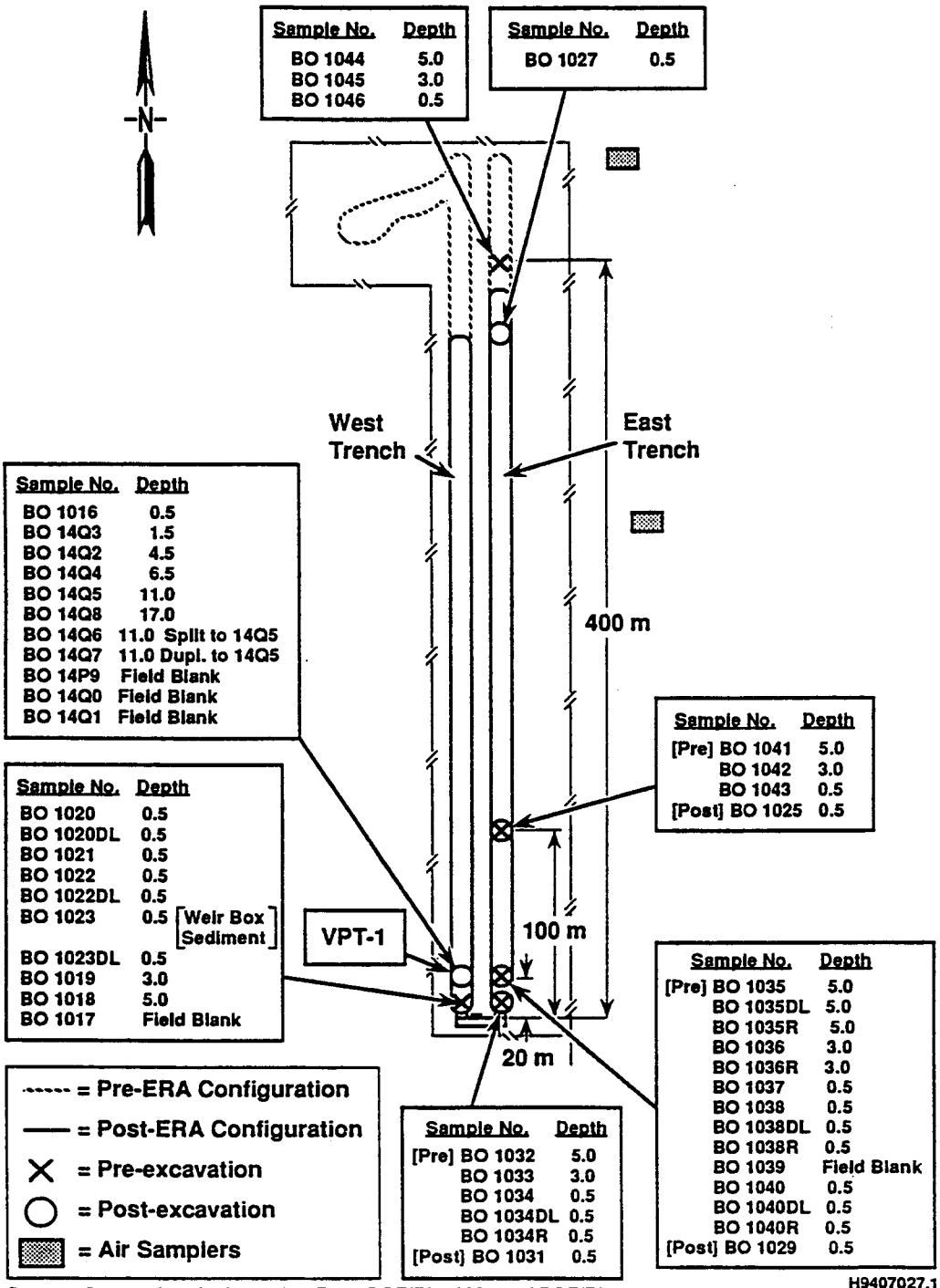

Source: Composite of Information From DOE/RL 1992a and DOE/RL 1991d

DL = Duplicate (Field Split)
R = Replicate (Laboratory Split)

CONTENTS

3.0 PROCESS INFORMATION 3-1
3.1 300 APT OPERATIONS 3-1
3.2 LIQUID WASTE TRANSFER SYSTEMS 3-1
3.2.1 The Process Sewer System 3-1
3.2.2 300 Area Retention Process Sewer 3-3
3.3 WASTE GENERATING PROCESSES 3-4
3.3.1 Fuel Fabrication Process Waste 3-4
3.3.2 Laboratory Process Waste 3-4
3.3.3 Unplanned Waste Releases to the Process Sewer System 3-5
3.3.4 Other Process Waste 3-5
3.4 CONTAMINATED 300 APT MEDIA 3-6

FIGURES:

3-1. Liquid Waste Transfer Systems Schematic F3-1

TABLES:

3-1. Index of Facilities Connected to the Process Sewer on November 16, 1993 . . . . . T3-1
3-2. Flow History for the Process Sewer T3-2
3-3. Occasions When the Process Sewer Exceeded Drinking Water Standards at the Point of Release to the Environment (excluding pH) T3-3
3-4. Estimated Nonradiological Chemical Waste Inventory for the Process Trenches T3-4
3-5. Fuel Fabrication Chemicals and Radionuclides T3-5

3.0 PROCESS INFORMATION

This chapter describes past 300 APT operations. It also identifies the 300 Area processes that generated radioactive and dangerous waste and the liquid waste transfer systems that carried process waste.

3.1 300 APT OPERATIONS

Process sewer effluent reached the unit through 61-cm- (24-in.) diameter process sewer piping that connected to a concrete weir box located at the south end of the 300 APT. The box has two sluice gates that in the past allowed the trenches to be operated alternately. Effluent was delivered to one trench for 4 to 6 months or until it rose to an operationally determined level; it was then diverted to the other trench. Since 1992, only the east trench received effluent. Effluent flowed through the east gate, down a concrete apron, and into the trench at a rate of approximately 1.9 million L/day (500,000 gal/day). There is no effluent outlet; all water either infiltrated the soil column or evaporated. Process sewer effluent was routed to the 300 Area TEDF in December 1994, effectively terminating the active use of the TSD unit. Isolation of process trench piping was completed in January 1995.

3.2 LIQUID WASTE TRANSFER SYSTEMS

Through the years, most 300 Area buildings have supported nuclear fuel element fabrication or laboratory research and development related to fuel fabrication. Many of these buildings discharged liquid effluent to the process sewer. The Retention Process Sewer System is connected to the process sewer system and still routinely discharges to the process sewer. A schematic of basic sewer system operation is presented in Figure 3-1. Table 3-1 identifies the buildings and laboratories connected to the process sewer.

The process sewer has always been the only liquid waste transfer system to directly discharge to the 300 APT. In the past, process sewer system effluent contained radioactive and organic and inorganic dangerous waste constituents, some of which remain at detectable levels in 300 APT soils.

Other 300 Area liquid waste transfer systems include the Radioactive Liquid Waste Sewer (RLWS) and the Sanitary Waste System. These systems are not connected to the process sewer, have never discharged to the trenches, and are not described in the closure plan.

3.2.1 The Process Sewer System

The process sewer collection system is vitrified clay piping with bell and spigot joints serving fifty-five 300 Area facilities. The process sewer system was originally constructed in 1943 to transfer contaminated 300 Area process liquid waste to the north and south process ponds (see Figure 2-4). The section of the sewer that served the north and south process ponds was retired in 1975 and, until December 1994, all process sewer effluent has gone to the process trenches (DOE-RL 1993c). This waste contained contaminated cooling water, low-level radioactive waste (primarily uranium), biological and chemical laboratory waste, miscellaneous waste (cleaning agents, organic solvents), and chemical spills. Since October 1993 (see Section 3.2.1.2), process sewer discharges contained only

potable and equipment cooling water, steam condensate from building heating, water softener regeneration waste, and nonhazardous waste liquids from laboratory drains.

3.2.1.1 Process Sewer Flows. Until 1987, the process sewer discharged up to 11.7 million L/day (3 million gal/day) of maintenance and process effluent. One-third of the daily discharge to the trenches was process cooling and rinse water from fuel fabrication operations. The other two-thirds of the daily influent was from a wide variety of laboratory operations conducted in the 300 Area. Effluent flows to the trenches averaged 3,500 L/min (900 gal/min), with peak discharges possibly as high as 7,900 L/min (2,084 gal/min) (DOE-RL 1993d).

Since 1987, the inactivity of fuel fabrication facilities and an aggressive flow minimization program reduced flow to approximately 1,500 L/min (400 gal/min), or approximately 1.9 million L/day (500,000 gal/day) (DOE-RL 1993d). Total annual process sewer flows from 1975 through 1994 are identified in Table 3-2. Currently there is no discharge to the process trenches.

3.2.1.2 Effluent Content. From 1975 to 1978, the process sewer operated with few administrative controls on effluent content. From 1978 until 1987, the Hanford Engineering Development Laboratory (HEDL) managed operation of the process sewer. In 1978, administrative controls were imposed on discharges of nonradioactive material to the process sewer by the HEDL Manual, *Environmental Protection* (HEDL 1984). These controls were designed to minimize the impact of process sewer effluent on the environment and included contaminant concentration restrictions, operating procedures, conspicuous posting, container labeling, and frequent inspections.

From the beginning of operations in 1975 until October 1993, a continuous, composite sampler was located at the headwork and analyzed process sewer effluent for metals, pH, gross alpha, gross beta, and uranium (HEDL 1984, WHC 1989). HEDL controls required composite samples to be collected weekly. Weekly samples were analyzed for pH, gross alpha, gross beta, metals, and anions. On a monthly basis, weekly samples were composited and screened for known or suspected chemical constituents (except organics) to ensure the attainment of HEDL standards on an annual average basis. These limits restricted releases of cations (i.e., metals), pH, and anions (e.g., sulfates, nitrates) to the standards shown in the manual, which were set to maximum contaminant levels (MCLs) contained in federal drinking water standards (DWS). HEDL standards for gross alpha, gross beta, and uranium were set from derived concentration guide (DCG) values provided in DOE orders.

Between 1978 and 1985, routine discharges to the process sewer generally complied with these standards, although it was not unusual for weekly results to indicate parameters (generally only pH) in excess of DWS. Effluent pH generally remained in the 6.5 to 8.5 range, with the lowest incidence being 3.0 and the highest being 9.7 (WHC 1990). Table 3-3 identifies the occasions when the process sewer exceeded DWS (except for pH) at the point of release to the trenches.

After February 1, 1985, the process sewer system and the trenches were completely closed to dangerous waste by administrative controls that required dangerous waste be collected, packaged, and disposed of under dangerous waste management regulations. In March 1985, the HEDL manual was revised to reflect this. This manual was superseded by WHC-CM-7-5, *Environmental Compliance* (WHC 1989), in 1987. This manual further restricted contaminant levels by imposing more stringent administrative control values (ACVs) for sampling parameters to further ensure that MCLs and DCGs were not exceeded in the process sewer. Since 1985, only five minor instances of concentrations outside regulatory limits have occurred: one involving lead, two involving chloride ions, one

perchloroethylene spill, and one spill of ethylene glycol. Process sewer effluent is nondangerous and remains below regulatory limits as reported in the *300 Area Wastewater Stream-Specific Report* (WHC 1990) and the *Hanford 300 Area Process Wastewater Characterization Data Report* (Stordeur 1992).

Since October 1993, process sewer effluent sampling has occurred near the 306 Building. This sampling is now performed in accordance with an approved sampling and analysis plan (SAP) (WHC 1993). Flow is continuously monitored for radionuclides. Grab samples are taken for nonradioactive constituents that now include volatile and semivolatile organics. The process sewer is no longer discharged to the process trenches; effluent is now discharged to the 300 Area TEDF.

Estimated quantities for all chemicals discharged from 1975 until the implementation of administrative controls in 1985 are listed in Table 3-4. This estimate includes suspected discharges of organic chemicals that were not analyzed for until 1993. Table 3-4 waste inventory estimates are based on investigations performed before 1986 in support of a preliminary 300 APT closure plan (WHC 1988). These investigations obtained current and historical information from knowledgeable 300 Area operations personnel regarding process waste discharges to the process sewer. The operations sources were not documented at that time and the information is not reverifiable. However, Table 3-4 information regarding potential process contaminants was used by the CERCLA RI/FS process in identifying the broadest possible range of contaminants to facilitate comprehensive TSD unit characterization, which was completed in December 1994.

The actual discharge quantities were important only in helping to anticipate expected contaminant levels. Other uses of the information (e.g., determining waste distribution within the unit) are no longer appropriate because the 316-5 ERA relocated contaminated sediments within the unit (Section 2.4). Since 1985, essentially the only source of dangerous waste to the trenches has been unplanned releases (Section 3.3.3).

3.2.2 300 Area Retention Process Sewer

The 300 Area retention process sewer was constructed in 1953 and remains in operation today as a predisposal screening and holding system for potentially radioactive laboratory effluent. Table 3-1 identifies the laboratories connected to the retention process sewer that have a potential to discharge radioactive waste. The retention process sewer was designed to coordinate with the RLWS in serving these laboratories but is also connected to the process sewer (Figure 3-1).

The retention process sewer effluent is monitored for radioactivity before leaving the building and, if radioactive, is diverted to the RLWS as radioactive waste. If not diverted, retention process sewer effluent continues on a flowpath toward the 307 Retention Basins. Before entering the basins, waste is again monitored for radioactivity. Currently, waste registering greater than 50,000 pCi/L beta activity is pumped to one of two 307 Retention Basins where it is held until the activity is verified by analysis. Effluent verified by analysis as radioactive is disposed of as radioactive liquid waste at the 340 Tank Complex. Waste not registering radioactivity (less than 50,000 pCi/L beta activity) is released to the process sewer system. The retention process sewer currently discharges approximately 189 L/min (50 gal/min) from the five laboratory facilities to the process sewer.

The 50,000-pCi/L activity level reflects the sensitivity of equipment installed in 1976. Adherence to this level also ensured compliance with DOE orders, requiring the annual average concentration to remain below the maximum permissible concentration (MPC). Use of the MPC has since been

replaced with the DCG by WHC-CM-7-5 (WHC 1989). Two retention process sewer monitoring system upgrades are underway (Projects W-345 and W-353) to upgrade the basin monitoring system and in-building diverter stations.

3.3 WASTE GENERATING PROCESSES

Fuel fabrication, laboratory research and development, and unplanned releases have been the primary sources of dangerous waste discharged by the process sewer to the trenches.

3.3.1 Fuel Fabrication Process Waste

Fuel fabrication facilities connected to the process sewer are identified in Table 3-1. From 1975 when the trenches entered service until 1987 when fuel fabrication essentially ceased, fabrication of fuel elements was primarily for N Reactor. Fuel fabrication activities routinely used a broad range of organic and inorganic lubricants, organic solvents, and other chemicals that were discharged to the process sewer system. The primary discharge from fuel fabrication was cooling and rinse water. These chemicals, along with radionuclides generated by fuel fabrication, are listed in Table 3-5.

N Reactor fuel was fabricated using an extrusion process. This process formed the zirconium cladding and the uranium/silicon fuel core from primary materials and bonded them together in one operation. Lubricants were removed using solvents such as trichloroethylene. Temporary copper jackets were removed from fuel elements by dissolution into nitric acid. The uranium core was chemically milled using copper sulfate, nitric acid, and sulfuric acid. Zirconium caps were brazed onto the elements using beryllium (DOE-RL 1988). Fuel elements were steam autoclave tested to detect perforations, and brazed connections were radiographed to detect unbonded areas or uranium in the welds (Young and Fruchter 1991).

Fuel fabrication was a source of approximately 1% enriched uranium discharged to the trenches. Fuel fabrication was not typically considered a source of the types of fission products found in the trenches, and so fuel fabrication facilities were not connected to the RLWS. Radionuclides listed in Table 3-5, other than uranium, originated from the reanodizing of aluminum spacers used in the old reactors before 1975. This waste was normally collected and discharged to the RLWS but occasionally entered the process sewer system (DOE-RL 1993c). Some of these radionuclides were likely deposited in process sewer sludge and could have been released to the trenches after 1975 during high sewer flows or pH excursions that no longer occur because of reduced process sewer flows and process controls.

3.3.2 Laboratory Process Waste

The chemical makeup and quantity of 300 Area laboratory waste has not been documented (DOE-RL 1993c). Although a wide variety of laboratory activities occurred in the 300 Area, laboratory waste is considered to be similar to fuel fabrication process waste because most of the buildings supported fuel fabrication (DOE-RL 1992c). Typical laboratory waste could also have consisted of standard laboratory cleaners, reagents, organic solvents, neutralizers, and drying agents (WHC 1992b). Standard laboratory chemicals primarily used to clean and rinse laboratory equipment are identified in Table 3-5. These could have been discharged directly to the process sewer through laboratory drains or from the retention process sewer in quantities insignificant to the waste stream.

3.3.3 Unplanned Waste Releases to the Process Sewer System

Chemical spills are known to have entered the process sewer through 300 Area building floor drains. The majority of these releases were of spent uranium-contaminated acid etch solutions. These unplanned releases to the process sewer since 1975 were documented at the time of the spills. The releases from 1975 to 1986 are summarized in Table 2-3 of the *Phase I and II Feasibility Study Report for the 300-FF-1 Operable Unit* (DOE-RL 1993c). The documented, unplanned releases to the process sewer from 1975 to 1980 are identified in unplanned release reports as UPR-300-8 through -29. Documented unplanned releases from 1980 until the end of fuel fabrication activities in 1986 are identified by date in the same table.

Other unplanned releases to the process sewer system include two spills of perchloroethylene on November 4, 1982, and July 6, 1984, of 455 L (120 gal) and 76 L (20 gal), respectively. The degradation products of perchloroethylene are trichloroethene, dichloroethene, and vinyl chloride (Section 5.3.2).

Since the completion of characterization sampling in 1991, two releases of ethylene glycol (antifreeze) to the process sewer have occurred. The first release of 1,364 L (360 gal) was in April 1993 and the second of 7.6 L (2 gal) in October 1993. Neither spill has been detected in groundwater as of 1995 (Section 5.3.2).

3.3.4 Other Process Waste

In the past, some of the facilities listed in Table 3-1 performed activities related to reactor operations, irradiated fuels examinations, chemical separations processes, photographic processing, and waste management. Some of the newer facilities support activities such as peaceful uses of plutonium, reactor fuels development, liquid metal technology, environmental remediation technology development, and life science programs (WHC 1992a). Although such facilities in the past may have contributed small quantities of radioactive or dangerous waste to the process sewer, trench soil analytical results reflect that their contribution to the waste stream and to subsequent trench soil contamination is insignificant compared to that of fuel fabrication. Photographic processing and photochemicals are discussed here as the largest documented nonfuel, fabrication-related process.

Since 1975, 300 Area photographic activities have included film badge processing, radiography (including fuel elements), and site photograph processing. Photographic activities still take place in the 3705 Building, which was disconnected from the process sewer in November 1990. Two general categories of photographic chemicals were used in the 3705 Building, some of which went to the process sewer before November 1990. These categories are the fixer and hardener solutions and the stop bath and activator chemicals. The stop bath consisted of acetic acid plus water, and the activator solution consists of potassium hydroxide and potassium sulfite. The fixers and hardener solutions typically include acetic acid, gluconic acid, aluminum sulfate, ammonium thiosulfate, sodium thiosulfate, ammonium acetate, ammonium sulfite, silver, and cadmium. Acids were neutralized before discharge to the process sewer. Silver-bearing solutions were analyzed and processed to remove silver. Photographic solutions containing cadmium at greater than 1 ppm were transported offsite for disposal (Young 1990).

3.4 CONTAMINATED 300 APT MEDIA

The 300 APT were leaching trenches that, until December 1994, disposed of process sewer effluent by evaporation and infiltration into the soil column. In the past, this effluent contained radioactive and dangerous waste constituents, some of which have remained in trench soils through filtration and adsorption. Current TSD unit soil contamination is characterized in the results of pre- and post-ERA sampling (Appendix 7D) and is discussed in Chapter 4.0.

Soils beneath the process sewer lines serving the unit (most of which were outside the TSD) were not sampled, but are likely to be similarly contaminated as the result of leaks from sewer piping joints (DOE-RL 1992c). The process sewer piping and potentially contaminated soils surrounding the piping outside of the 300 APT TSD will be addressed in the 300-FF-2 Operable Unit. TSD unit structures and components were not sampled; however, rainwater contained within the weir box (located at the head end of the piping associated with the 300 APT) has been sampled. Analytical results from the sampling showed no evidence of contamination. Since there is no evidence of contamination in the weir box, it is prudent to assume that piping associated with the process trenches is also not contaminated. The basis for this position is that millions of gallons of clean water have flowed through 300 APT piping and the weir box and, as a result, have effectively decontaminated them. Based on the technical facts, the weir box and piping connected to the weir box up to the boundary of the 300 APT will remain in place. However, if deemed appropriate because of site grading for closure purposes, the weir box and/or piping may be crushed in place or removed to eliminate a future cave-in potential. Soils beneath the weir box will be analyzed during 300 APT physical closure activities to determine if contamination is present. Remediation of contaminated soils and disposal of unit structures and components are discussed in Chapters 6.0 and 7.0.

Figure 3-1. Liquid Waste Transfer Systems Schematic.

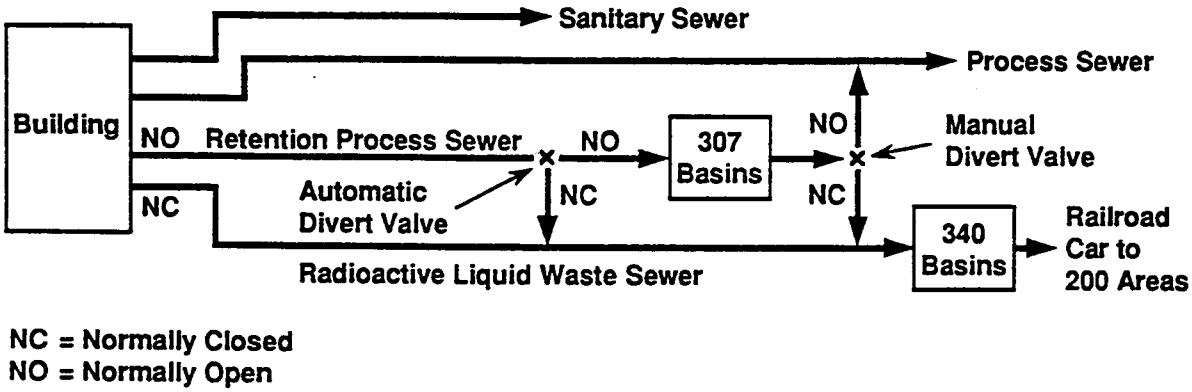

NC = Normally Closed
NO = Normally Open

Table 3-1. Index of Facilities Connected to the Process Sewer on November 16, 1993. (2 Sheets)

Number	Name
[a]303F	Pumphouse (WHC)
303J	Material Storage Building (PNL)
[a]303M	Uranium Oxide Facility (WHC)
[a]304	Uranium Concretion Facility (WHC)
305	Engineering Testing Facility (WHC)
305B	Hazardous Waste Storage Facility (PNL)
306E	Development, Fabrication, and Test Laboratory (WHC)
[b]306W	Materials Development Laboratory (PNL)
308	Fuels Development Laboratory (via retention process sewer only) (WHC)
309	Test Engineering Facility (WHC)
[a]311	Tank Farm (WHC)
[a]313	N Fuels Manufacturing Support Facility (WHC)
314	Engineering Development Laboratory (PNL)
318	Radioactive Calibrations Laboratory (PNL)
320	Physical Science Laboratory (PNL)
321	Hydromechanical/Seismic Facility (WHC)
323	Mechanical Properties Laboratory (PNL)
[b,c]324	Waste Technology Engineering Laboratory (PNL)
[b,c]325	Applied Chemistry Laboratory (via retention process sewer only) (PNL)
[b,c]326	Material Science Laboratory (PNL)
[b,c]327	Post Irradiation Test Laboratory (PNL)
[b,c]329	Chemical Science Laboratory (PNL)
331	Life Science Laboratory 1 (PNL)
331D	Biomagnetic Lab (PNL)
331E	Greenhouse (PNL)
331J	Incinerator (PNL)
[a]333	N Fuels Fabrication Facility (WHC)
[a]334	Process Sewer Monitoring Facility (WHC)
335	Sodium Testing Facility (WHC)
336	High Bay Testing Facility (PNL)
337	Technical Management Center (PNL)
337	High-bay and Service Wing (WHC)

Table 3-1. Index of Facilities Connected to the Process Sewer on November 16, 1993. (2 Sheets)

Number	Name
338	Fabrication Shop (KEH)
340	Waste Neutralization Facility (WHC)
382	Pumphouse (WHC)
382	A,B,C Water Storage Tanks (WHC)
384	Powerhouse (WHC)
3100	Future Facility (PNL)
3706	Communication and Documentation Services (WHC)
3707C	Safeguards and Security Maintenance Shop (WHC)
3708	Radioanalytical Laboratory (PNL)
3709	Paint Shop (WHC)
[a]3716	Storage (WHC)
3717	Spare Parts Warehouse (WHC)
3717B	Standards Laboratory (WHC)
3718F	Sodium Storage (WHC)
3720	Chemistry and Metal Sciences Laboratory (PNL)
3722	Construction Shop (KEH)
3730	Gamma Irradiation Facility (PNL)
3732	Old Thoria Lab (WHC)
3745A	Electron Accelerator Facility (PNL)
3745B	Positive Ion Accelerator Facility (PNL)
3746A	Radioactive Physics Laboratory (PNL)
3802A	Steam Pressure Reducing Valve Station (WHC)
3902A	West Elevated Water Tank
3902B	East Elevated Water Tank

NOTES:
[a]Fuel Fabrication Facilities.
[b]Facilities also connected to the Radioactive Liquid Waste Sewer.
[c]Facilities also connected to the Retention Process Sewer.

PNL = Pacific Northwest Laboratory
WHC = Westinghouse Hanford Company.

Table 3-2. Flow History for the Process Sewer.

Year	Amount discharged (gal)	Gallons per minute
March 16, 1975 through December 31, 1975	1.8 E+08	431
1976	9.1 E+08	1,731
1977	5.0 E+08	951
1978	5.0 E+08	951
1979	1.2 E+09	2,283
1980	8.4 E+08	1,600
1981	8.5 E+08	1,620
1982	8.5 E+08	1,620
1983	9.1 E+08	1,731
1984	9.3 E+08	1,770
1985	9.4 E+08	1,790
1986	9.0 E+08	1,712
1987	8.6 E+08	1,636
1988	4.3 E+08	818
1989	5.0 E+08	951
1990	5.2 E+08	990
1991	3.4 E+08	647
1992	1.5 E+08	285
1993	1.1 E+08	215
1994	~1.0 E+08	~200
NOTE: The 300 Area process sewer trenches were placed in operation on March 16, 1975.		

Table 3-3. Occasions When the Process Sewer Exceeded Drinking Water Standards at the Point of Release to the Environment (excluding pH).

Date	Parameter	Drinking Water Standard Limit (ppb)	Result (ppb)
March 10, 1976	Mercury	2	8.4
March 17, 1976	Cadmium	10	<20
December 14, 1977	Cadmium	10	34
April 25, 1978	Copper	1,000	4,000
April 25, 1978	Chromium	50	150
April 25, 1978	NO_3	45	69
September 5, 1978	Copper	1,000	1,200
May 8, 1979	Chromium	50	44-63
February 3, 1981	Mercury	2	3.7
February 24, 1982	Mercury	2	2.2
February 24, 1982	Cadmium	10	19
June 3, 1986	Chlorine	250,000	322,000
August 12, 1986	Lead	50	250
January 5, 1988	Chlorine	250,000	417,000
May 25, 1988	Lead	50	150

Source: WHC (1988).

ppb = parts per billion.

Table 3-4. Estimated Nonradiological Chemical Waste Inventory for the Process Trenches.

Total of intermittent discharges of dangerous chemicals ending February 1, 1985[a,b]		Larger discharges[c] continuing until September 1986[d]		Total of larger discharges[e]
<g	<kg			
Ammonium biofluoride	Benzene	Copper	≈30 kg/month[f]	3,960 kg
Antimony	Carbon tetrachloride[g]	Detergents	≤30 kg/month[f]	3,460 kg
Arsenic	Chromium	Ethylene glycol	≤200 L/month[f]	26,400 L
Barium	Chlorinated benzenes	Heating oil	≈300 L[h]	300 L
Cadmium	Formaldehyde	Hydrofluoric acid	≈100 kg/month[f]	13,200 kg
Dioxine	Formic acid	Nitrates	≤2,000 kg/month[f]	264,000 kg
Dioxin[i]	Hexachlorophene	Nitric acid	≤300 L/month[f]	39,600 L
Hydrocyanic acid	Kerosene	Paint solvents	≤100 L/month[f]	13,200 L
Pyridine	Lead	Tetrachloroethylene	≈450 L[h]	450 L
Selenium and compounds	Methyl ethyl ketone[j]	Photo chemicals[k]	≤700 L/month[f]	92,400 L
Thiourea	Mercury	Sodium chloride	≈75 ton/yr[f]	825 ton/yr
Miscellaneous	Naphthalene	Sodium hydroxide	≤300 L/month[f]	39,600 L
laboratory chemicals	Nickel	Uranium	≈20 kg/month[f]	2,640 kg
	Phenol			
	Silver			
	Sulfuric acid			
	Tetrachloroethylene[j,l]			
	Toluene[j]			
	Tributylphosphate (paraffin hydrocarbon solvents)			
	1,1,1-trichloroethane			
	Trichloroethylene[g,j]			
	Xylenes[j]			

Source: Adapted from DOE-RL (1992a).
NOTES: 1 kg = 2.2 lb; 1 L = 0.26 gal.
[a]February 1, 1985 is date of administrative controls disallowing discharge of dangerous waste to the process sewer.
[b]Includes organics that were not analyzed for by process sewer effluent sampling.
[c]These discharges, except for the spills, were relatively continuous.
[d]September 1986 is approximate end of fuel fabrication activities.
[e]Total is monthly average discharge x 12 (mo. per yr) x 11 (operating yr from March 1975 to September 1986).
[f]Monthly or annual quantity is an average over a 17-month period beginning February 1985 and ending September 1986.
[g]Also trichlorethylene, trichlorethene.
[h]Known spills.
[i]Included only because of the potential for dioxin to exist as trace impurity in chlorinated benzenes.
[j]Used as degreasing solvent.
[k]Individual photographic chemicals are listed in Section 3.3.4.
[l]Also perchlorethylene, tetrachlorethene.

Table 3-5. Fuel Fabrication Chemicals and Radionuclides.

Chemicals routinely used in fuel fabrication	Radionuclides generated by fuel fabrication
Chromic acid	Scandium-46
Chromium trioxide	Chromium-51
Copper sulfate	Cobalt-58
Hydrofluoric acid	Iron-59
Nitric acid	Cobalt-60
Oxalic acid	Zinc-65
Phosphoric acid	Zirconium/niobium isotopes
Potassium nitrite	Cesium-137
Sodium aluminate	Promethium-147
Sodium bisulfate	Thorium-234
Sodium carbonate	Uranium isotopes
Sodium dichromate	Plutonium isotopes
Sodium fluorosilicate	
Sodium gluconate	
Sodium hydroxide	
Sodium nitrate	
Sodium nitrite	
Sodium pyrophosphate	
Sodium silicate	
Sulfuric acid	
Trichloroethylene	

Source: DOE-RL (1992c).

CONTENTS

4.0 WASTE CHARACTERISTICS 4-1
4.1 CHARACTERISTICS OF ROUTINE AND NONROUTINE WASTE DISCHARGES 4-1
4.1.1 Routine Discharges 4-1
4.1.2 Nonroutine Discharges 4-1
4.2 MAXIMUM INVENTORY OF WASTE MANAGED AT THE UNIT 4-2
4.3 WASTE RESIDUES REMAINING AT THE UNIT 4-2
4.3.1 Contained-In Determination 4-2
4.3.2 TSD Unit Risk from Nonradioactive Contaminants 4-3
4.3.3 Areas Potentially Requiring Cleanup for Radionuclides 4-4

TABLES:

4-1. Nonroutine Discharges Designation Results T4-1
4-2. Nonradioactive Soil Contaminants of Potential Concern in 300 APT Soil T4-2
4-3. Sampling Results for Selected Radioactive Contaminants in the Process Trenches T4-3
4-4. Radionuclide Dose-Based Concentrations T4-4

4.0 WASTE CHARACTERISTICS

This chapter discusses the inventory and characteristics of the waste disposed at the 300 APT. It also discusses the nature and extent of the contamination remaining at the unit. Information regarding radioactive contaminants at the 300 APT is included in this closure plan; however, radionuclides are not considered RCRA dangerous waste and information regarding them is presented for information only.

4.1 CHARACTERISTICS OF ROUTINE AND NONROUTINE WASTE DISCHARGES

This section discusses the waste characteristics of the routine and nonroutine discharges to the 300 APT TSD.

4.1.1 Routine Discharges

The chemicals routinely discharged to the process sewer by fuel fabrication facilities are identified in Table 3-5. The chemical makeup and quantities of routine laboratory discharges are not documented. However, laboratory waste is expected to have been standard laboratory agents (Section 3.3.2) and waste similar to fuel fabrication process waste (Section 3.3.1), although in smaller quantities (DOE-RL 1992c).

Sampling and analyses of routine discharge indicate that the trenches occasionally received effluent that exceeded DWS. Table 3-3 summarizes parameters that exceeded DWS from 1978 to 1988. None of these DWS exceedances were significant enough to designate the effluent as dangerous waste under the concentration-based criteria for characteristic waste (WAC 173-303-90) or for state-only criteria waste (WAC 173-303-100). However, Table 3-4 identifies spent solvents that would designate the process sewer effluent stream as F-listed (i.e., F002, F003, F005) waste (WAC 173-303-9904) under the EPA waste mixture rule [40 CFR 261.3 (b)(2)]. Section 4.3 discusses the transfer of listed waste codes to TSD unit soils.

4.1.2 Nonroutine Discharges

The nonroutine discharges to the TSD consisted of unplanned releases (spills) to floor drains in facilities connected to the process sewer. The chemical content of documented, unplanned releases to the process sewer from 1975 to 1986 is documented in Table 2-3 of *Phase I and II Feasibility Study Report for the 300-FF-1 Operable Unit* (DOE-RL 1993c). These spills were primarily acid etch solutions from the fuels fabrication process.

The most significant of these spills underwent after-the-fact waste designation in 1986 based on spill report information. The nature and concentration of the waste caused the discharges to be designated as F001, F002, F003, and F005-listed (spent solvents) waste; D002 (corrosive characteristic) waste; D007 (toxicity characteristic; chromium); and state-only criteria (WT02) waste. The results of designation of nonroutine discharges are shown in Table 4-1.

A spill of perchloroethylene on July 6, 1984, of 76 L (20 gal) was identified in the TSD Facility Annual Dangerous Waste Report (Rockwell 1984) as being an unused chemical product. Consequently, the spill was assigned dangerous waste code U210, which is a listed waste code.

It is unlikely that the characteristic or criteria causing a dangerous waste designation would have been retained in the effluent by the time it arrived at the unit because of constituent dilution with copious amounts of clean, neutralizing cooling water in the process sewer and in the trenches. The results of routine sampling did not reflect DWS exceedances of weekly sampling parameters or of monthly screening parameters immediately after the spills. However, the process sewer effluent arriving at the unit would still retain the F001, F002, F003, F005, and U210 listing under the EPA waste mixture rule.

4.2 MAXIMUM INVENTORY OF WASTE MANAGED AT THE UNIT

The estimated quantities of chemicals discharged to the 300 APT from 1975 until the implementation of administrative controls in 1985 are shown in Table 3-4. However, the total amount of dangerous waste discharged to the unit is indeterminate. The process sewer flows shown in Table 3-2 can be used in calculating the total volume of waste water sent to the unit from 1975 through 1993 as approximately 49.6 billion L (12.4 billion gal). The relative volume and concentrations of dangerous waste constituents in the process sewer effluent stream were very small. Consequently, this figure does not represent a volume of dangerous waste.

4.3 WASTE RESIDUES REMAINING AT THE UNIT

This section addresses residual contamination in TSD unit soils. It discusses removal of dangerous waste codes from these soils, characterizes unit risk from nonradioactive contaminants, and identifies the potential extent of cleanup required for radionuclides.

4.3.1 Contained-In Determination

Upon discharge of process sewer effluent containing U- and F-listed constituents to the TSD unit soil column, the soil gained the U and F listing under WAC-173-303-070(2)(a). However, if concentrations of such listed waste remain in environmental media (e.g., soils) below health-based residential standards calculated using MTCA Method B formulas, this listing may be withdrawn (Ecology 1994b). U- and F-listed chemicals remain in TSD unit soils. Consequently, DOE-RL requested a contained-in determination from Ecology to remove the U and F listing from 300 APT unit soils. Ecology has granted a conditional contained-in determination allowing disposal of 300 APT soils to the ERDF or a RCRA Subtitle C compliant facility. As discussed in Section 7.4.3, removal of this listing will ease disposal restrictions on 300 APT waste soils.

4.3.2 TSD Unit Risk from Nonradioactive Contaminants

The TSD unit soil sampling was performed by the 300-FF-1 Operable Unit immediately before and after the TSD unit excavations in support of the 316-5 Process Trenches ERA (Section 2.4). Soil samples were analyzed for radionuclides, volatile organics, semivolatile organic compounds, polychlorinated biphenyls (PCB), and metals. These analytical results were used to determine the effectiveness of the ERA. They were also used by the 300-FF-1 Operable Unit RI/FS (DOE-RL 1992c) to characterize unit risk in assessing the need for further remedial action at the unit. The risk assessment was performed using HSBRAM. The risk assessment process provides a high degree of confidence that eliminated constituents pose only insignificant risk to human health and the environment (DOE-RL 1995b).

The ERA redistributed contamination at the 300 APT, creating essentially two separate areas: the contaminated spoils area and relatively clean remaining trench areas. The risk assessment addressed these areas separately. Pre-ERA sampling results were used to represent the spoils area, and post-ERA results were used to represent the remaining trench area.

Table 4-2 identifies the list of nonradioactive contaminants of potential concern at the 300 APT. This list was formulated before the risk assessment was performed by comparing ERA sample results to background (DOE-RL 1994b) or residential HBLs as preliminary screening criteria (DOE-RL 1993d).

The risk assessment recognized future land use as industrial. Under this usage assumption, the primary exposure was identified as being to onsite industrial workers or offsite residential or recreational receptors (DOE-RL 1993d). The risk assessment process numerically quantifies toxic or carcinogenic effects to humans as health quotient or lifetime incremental cancer risk (ICR), respectively (DOE-RL 1993d). Table 6-21 of the Phase I RI is a summary of the baseline industrial scenario risk assessment for nonradioactive contaminants (DOE-RL 1993d). The table shows that no individual contaminant has an ICR greater than 1×10^{-5} or hazard quotient (HQ) greater than 1.0. A total pathway ICR of 5×10^{-5} is stated for the pre-ERA (spoils) area of the process trenches. The significant cumulative contributions are from arsenic, chromium, beryllium, chrysene, benzo(a)pyrene, and PCBs. Total pathway risk greater than 1×10^{-5} requires further consideration (DOE-RL 1995b).

Of the Table 4-2 contaminants of potential concern, only arsenic, beryllium, chromium, copper, benzo(a)pyrene, chrysene, and PCBs in the spoils area exceeded the risk levels under the industrial exposure scenario. Copper was retained as a contaminant of concern to surface water via groundwater. Under this exposure assumption, the nonradioactive contaminants at the post-ERA trenches provide total ICR of 3×10^{-6} ICR, requiring no further consideration. However, the contaminants in the spoils area provide total ICR of 5×10^{-5}, requiring further consideration.

Table 2-2 of the Phase III FS (DOE-RL 1995b) further reduces this list by eliminating arsenic, beryllium, chromium, and copper as contaminants of concern. Arsenic and beryllium were deleted as not actually exceeding sitewide background. Beryllium also had a limited number of detections. Residual chromium in soils is expected to be in the trivalent state because most of the hexavalent salts are readily dissolved and transported. Therefore, chromium was deleted as actually being the much less toxic trivalent chrome and not hexavalent chromium (DOE-RL 1995b). Copper was deleted as a potential groundwater contaminant because low groundwater concentrations indicated no threat to surface water quality standards.

This leaves only benzo(a)pyrene, chrysene, and PCBs as nonradioactive contaminants of concern to the 300 APT as identified by the CERCLA RI/FS process. These organic contaminants exist only at the spoils area of the 300 APT and at concentrations below MTCA Method C industrial cleanup levels. This is the contaminant level under which the 300 APT can undergo modified closure. Table 4-7 of the Phase III FS (DOE-RL 1995b) has assigned operable unit soils a PRG for these organics that TSD unit levels do not exceed. Consequently, the operable unit is not driven to remediate the TSD for any nonradioactive contaminants to protect onsite industrial workers or offsite residential or recreational receptors. Further, the RCRA unit is not driven to remediate soils to meet MTCA Method C industrial cleanup levels in order to qualify the site for modified closure. However, remediation of TSD unit soils would be required to qualify the site for RCRA clean closure.

4.3.3 Areas Potentially Requiring Cleanup for Radionuclides

Under the industrial usage scenario, the RI/FS process has identified no risk from TSD unit dangerous waste contaminants that would require cleanup of the trenches. However, radionuclides are much more prevalent and exist at higher concentrations than nonradiological contaminants. Radionuclides are not considered RCRA dangerous waste, but are within the scope of CERCLA regulations and may drive the CERCLA unit to cleanup portions of the TSD.

Cleanup of radionuclides can most simply be implemented through the identification of indicator contaminants whose remediation will also indicate that cleanup for other radionuclides has been met. The indicator contaminants for the 300 APT are cobalt-60 and uranium-238. The indicator contaminant for the impoundment area is uranium-238, and the indicator contaminant for the remainder of the trenches is cobalt-60 (DOE-RL 1995b). Cleanup of the more prevalent and concentrated radioactive contaminants will also reduce dangerous waste contaminant levels (DOE-RL 1995b). Because this remediation will affect selection of a RCRA closure option, TSD unit closure will not be finalized until completion of the CERCLA cleanup.

Soil analytical results for the indicator contaminants are shown in Table 4-3. The allowable concentration for alternative annual exposure (dose) limits is presented in Table 4-4. Attaining these cleanup levels ensures achieving the associated dose limit at each waste management unit. Annual doses of 3, 10, 15, and 25 mrem are associated with ICRs of 4×10^{-5}, 1×10^{-4}, 2×10^{-4}, and 3×10^{-4}, respectively (based on a risk factor of 6.2×10^{-7}/mrem and an industrial receptor exposure duration of 20 years). One of these annual dose limits could be selected by the ROD. A comparison of Table 4-3 analytical results with Table 4-4 allowable concentrations for each exposure limit gives an idea of the extent of cleanup necessary for each exposure alternative.

The results of such a comparison can be summarized as follows. Much of the spoils area exceeds the allowable concentration for uranium-238 at the highest alternative exposure of 25 mrem/yr. This condition could require total cleanup of spoils areas. The remainder of the trenches do not exceed allowable concentrations for cobalt-60 even at the most restrictive exposure of 3 mrem/yr. This means that these areas initially may not be slated for cleanup.

The 300 APT piping, structures, and components were not considered in the risk assessment. However, rainwater contained within the weir box (located at the head end of the piping associated with the 300 APT) has been sampled. Analytical results from the sampling showed no evidence of contamination. Because there is no evidence of contamination in the weir box, it is prudent to assume

that piping associated with the process trenches is also not contaminated. The basis for this position is that millions of gallons of clean water have flowed through 300 APT piping and the weir box and, as a result, have effectively decontaminated them. Based on the technical facts, the weir box and piping connected to the weir box up to the boundary of the 300 APT will remain in place. However, if deemed appropriate because of site grading for closure purposes, the weir box and/or piping may be crushed in place or removed to eliminate a future cave-in potential. Process sewer piping outside the 300 APT will be addressed by the 300-FF-2 Operable Unit. Soils beneath the weir box will be analyzed during 300 APT physical closure activities to determine if contamination is present.

Table 4-1. Nonroutine Discharges Designation Results.

Date	Description	Quantity	Designation
06/75	Waste etch acids containing HF, HNO_3, H_2SO_4, chromic acid with Cu, uranium, and Zr in solution	Unknown	D002 WT02 D007 (DW)
07/03/76	HNO_3 solution containing 121.5 kg of depleted uranium	847 gal	D002 WT02
06/02/78	Solution primarily made up of water with some waste etch acids (HF, HNO_3, H_2SO_4, w/Cu, uranium and Zr in solution)	18,780 gal	D002 WT02
10/30/79	Uranium bearing acid waste containing HNO_3 and H_2SO_4, with uranium in solution	unknown	D002 WT02
01/12/80	50% NaOH solution	<.1 16 NaOH	D002 WT02
02/15/80	Waste etch acids containing HNO_3 and H_2SO_4 with uranium in solution	small, exact volume unknown	D002 WT02
07/21/80 07/28/80	Waste etch acids containing HNO_3 and HF	small, exact volume unknown	D002 WT02
08/05/80	Nitric acid	small, exact volume unknown	D002 WT02
08/19/80	Uranium-bearing acid - HNO_3 and H_2SO_4	unknown	D002 WT02
08/80	Etch acid consisting of HNO_3 and H_2SO_4	small, exact volume unknown	D002 WT02
08/80	Waste etch acids containing nitric and hydrofluoric acid	small, exact volume unknown	D002 WT02
09/22/80	50% NaOH solution	290 gal	D002 WT02
09/30/80	Nitric, sulfuric, and chromic acid, followed by NH_4F_2 and NaOH	unknown	D002 WT02
11/04/82	Perchloroethylene, spent	~120 gal	F001
07/06/84	Perchloroethylene, spent	~20 gal	U210
02/01/86	Waste etch acids containing HF and HNO_3 with Zr, Cr, uranium, and Cu in solution	350 gal	D002 WT02 D007 (DW)

Table 4-2. Nonradioactive Soil Contaminants of Potential Concern in 300 APT Soil.

Contaminant	CAS No.	Concentration[a] (95% UCL[b])		Maximum Soil Concentration[a]	Hanford Sitewide Background -Soil[f] (95/95)	Oral CPF[e] (mg/kg-d)$^{-1}$	Oral RfD[e] (mg/kg-d)	MTCA Method B-Residential (WAC 173-340-740)		MTCA Method C-Industrial (WAC 173-340-745)	
		Pre-ERA[c]	Post-ERA[d]					Carc	Tox	Carc	Tox
Inorganics: mg/kg (ppm)											
Aluminum	7429-90-5	7,010	6,600	11,300	15,100	[g]	1.0	[g]	80,000	[g]	3.5×10^6
Arsenic	7440-36-0	3.0	1.6	5.2	9.0	1.7	.0003	[h]1.43	[h]60	[h]190	[h]2,600
Beryllium	7440-41-7	0.66	0.28	1.9	1.8	4.3	.005	.23	400	31.0	17,500
Chromium	7440-47-3	70.6	[i]--	177.0	28.0	[g]	[j].005	[g]	400	[g]	17,500
Copper	7440-50-8	1,300	69.1	3,560.0	30.0	[g]	.04	[g]	3,200	[g]	130,000
Manganese	7439-96-5	793	469	2,480.0	583.0	[g]	.14	[g]	11,000	[g]	490,000
Mercury	7439-97-6	1.4	0.1	3.6	1.3	[g]	.0003	[g]	24.0	[g]	1,050
Nickel	7440-02-0	254	23.5	959	25.0	[g]	.02	[g]	1,600	[g]	70,000
Silver	7440-22-4	53.6	14.0	144	2.1	[g]	.005	[g]	400	[g]	17,500
Vanadium	7440-62-2	88.0	48.8	176	107.0	[g]	.007	[g]	560	[g]	24,500
Organics: mg/kg (ppm)											
Benzo(a)pyrene	50-32-8	6.0	--	27	[k]	7.3	[l]	.14	[l]	18	[l]
Chrysene	218-01-9	8.91	--	43	[k]	7.3	[l]	.14	[l]	18	[l]
PCBs	totals	11.0	0.38	19.5	[k]	7.7	[l]	.130	[l]	17	[l]
Pentachlorophenol	87-86-5	26.0	--	1.5	[k]	.12	.03	8.3	2,400	1,100	110,000
Vinyl Chloride	75-01-4	0.01	--	0.024	[k]	1.9	[l]	.52	[l]	69	[l]

NOTES:
Source: DOE-RL (1993d), Table 4-31.
[a]Source: DOE-RL (1993d), Table 6-1.
[b]95% UCL for the mean soil concentration (DOE-RL 1994b).
[c]Concentration representative of the ERA impoundment area and the north end of each trench.
[d]Concentration representative of trench areas other than the ERA impoundment and the north end of each trench.
[e]Source: DOE-RL (1994a), Table 4-15.
-Current with first quarter 1994 Integrated Risk Information System (IRIS) (EPA 1991).
-Chrysene value based on benzo(a)pyrene used as a surrogate based on structural-activity relationships.
-Manganese value is for oral ingestion of soil via food. Cleanup levels and risk calcualtion (CLARC II) uses RfD for oral soil ingestion via drinking water.
[f]Hanford Site Background (DOE-RL 1994b).
[g]Not classified as a carcinogen or not carcinogenic via this exposure route (DOE-RL 1992a).
[h]Gastrointestinal absorption factor (AB1) of .4 used (instead of 1.0) in MTCA calculations for arsenic (Ecology 1994a).
[i]-- = Not detected.
[j]Value is for hexavalent chrome.
[k]Hanford Site Background not established for these organic chemicals.
[l]Toxicity factor not available from EPA [i.e., IRIS, Health Effects Summary Table (HEAST), STSC].

CAS = Chemical Abstract System
CPF = Cancer potency factor [same as slope factor (SF)]
MTCA = Model Toxics Control Act
ppm = parts per million
RfD = Reference dose
UCL = Upper confidence limit.

Table 4-3. Sampling Results for Selected Radioactive Contaminants in the Process Trenches.

Location	Depth	^{137}Cs (pCi/g)	^{60}Co (pCi/g)	^{226}Ra (pCi/g)	^{228}Th (pCi/g)	^{234}U (pCi/g)	^{235}U (pCi/g)	^{235}U G (pCi/g)	^{238}U (pCi/g)	^{238}U G (pCi/g)	^{65}Zn (pCi/g)
316-5 VPT-1	0.5	1.21	0.14	0.32	0.41	60	3.93	NA	44	NA	NA
316-5 VPT-1	1.5	0.91	ND	0.37	0.48	45	6.1	NA	32	NA	NA
316-5 VPT-1	4.5	1.47	ND	0.36	0.69	59	7.73	NA	44	NA	NA
316-5 VPT-1	6.5	ND	ND	1.57	0.83	17	2.05	NA	12	NA	NA
316-5 VPT-1	11	ND	ND	0.37	ND	16	2.16	NA	11	NA	NA
316-5E POST	0.5	ND	ND	0.27	0.35	8.45	1.11	NA	5.98	NA	NA
316-5E POST	0.5	0.04	ND	0.24	0.33	3.50	0.37	NA	2.49	NA	NA
316-5E POST	0.5	0.24	0.05	0.35	0.44	7.15	1.0	NA	5.35	NA	NA
316-5E POST	0.5	0.70	0.32	0.26	0.37	6.20	0.90	NA	4.71	NA	NA
316-5E PRE	0.5	NA	NA	ND	NA	72	7.9	NA	64	NA	NA
316-5E PRE	0.5	0.61	0.14	0.40	0.81	106	10	NA	77	NA	NA
316-5E PRE	0.5	0.89	0.79	0.99	16	8,790	1,556	638	6,032	9,143	NA
316-5E PRE	0.5	1.07	1.03	0.56	0.71	72	4.2	NA	69	NA	NA
316-5E PRE	0.5	1.08	0.55	1.24	5.39	3,565	319	NA	2,917	NA	NA
316-5E PRE	0.5	1.14	0.96	0.97	16.79	9,747	379	NA	9,132	NA	NA
316-5E PRE	3	0.34	0.07	0.38	0.66	43	7.39	NA	33	NA	NA
316-5E PRE	3	0.34	0.05	0.43	0.52	5.54	0.68	NA	4.29	NA	NA
316-5E PRE	3	0.53	0.36	0.40	ND	1,492	138	85	1.072	1,246	NA
316-5E PRE	3	0.55	0.11	0.49	1.53	503	74	NA	357	NA	NA
316-5E PRE	5	0.04	0.08	0.39	0.56	13	2.13	NA	8.64	NA	NA
316-5E PRE	5	0.39	0.08	0.39	0.57	68	9.19	NA	50	NA	NA
316-5E PRE	5	0.52	0.22	0.42	0.64	12	1.72	NA	9.19	NA	NA
316-5E PRE	5	0.69	0.03	0.42	0.62	37	2.94	NA	30	NA	NA
316-5W PRE	0.5	0.60	0.72	1.13	1.47	257	-12	NA	283	NA	NA
316-5W PRE	0.5	1.32	1.78	0.84	1.24	1,515	100	NA	1,062	NA	NA
316-5W PRE	0.5	1.73	1.57	1.24	2.59	2,602	216	NA	1,779	NA	NA
316-5W PRE	0.5	2.29	2.51	1.610	2.72	390	19	NA	290	NA	ND
316-5W PRE	3	2.39	0.65	0.81	1.08	120	4.64	NA	93	NA	NA
316-5W PRE	5	0.38	ND	0.32	0.56	22	2.86	NA	15	NA	NA

Source: DOE-RL (1995b).
NA = Not applicable.
ND = Not detected.

Table 4-4. Radionuclide Dose-Based Concentrations.

Radionuclide	Concentration associated with annual dose limit (pCi/g)			
	3 mrem	10 mrem	15 mrem	25 mrem
Cobalt-60	0.7	2.4	3.5	5.8
Uranium-234	6.1	22	30	51
Uranium-238	18	61	89	150

Source: DOE-RL (1995b).

CONTENTS

5.0 GROUNDWATER MONITORING 5-1
5.1 AQUIFER IDENTIFICATION 5-1
5.2 INTERIM STATUS PERIOD GROUNDWATER MONITORING 5-1
5.2.1 Well Location and Design 5-2
5.2.2 Sampling and Analysis Plan 5-3
5.2.3 QA and QC 5-4
5.3 RESULTS OF GROUNDWATER MONITORING 5-4
5.3.1 Potentiometric Levels 5-4
5.3.2 Groundwater Quality During Interim Status 5-5
5.3.3 Groundwater Quality During Final Status 5-6
5.4 CORRECTIVE ACTION GROUNDWATER MONITORING PROGRAM 5-7
5.4.1 WAC 173-303-645(3) Groundwater Protection Standard 5-8
5.4.2 WAC 173-303-645(8) General Groundwater Monitoring Requirements 5-9

APPENDIX:

5A GROUNDWATER REFERENCES ..... APP 5A-I

FIGURES:

5-1. Well Locations F5-1

TABLES:

5-1. Monitoring Well for the 300 APT Network T5-1

5.0 GROUNDWATER MONITORING

This chapter describes the groundwater monitoring program at the 300 APT site, including well location, hydrogeologic characterization, and data collection. Current knowledge of the site hydrogeology and groundwater quality is summarized. Radiological constituents of concern in groundwater are discussed for informational purposes. Uranium is considered a contamination indicator in both past and current groundwater monitoring systems associated with 300 APT.

5.1 AQUIFER IDENTIFICATION

The uppermost aquifer within the 300 Area is contained within the gravel and sands of the Hanford formation and the Ringold Formation. The geologic and hydrologic characteristics of these deposits are described in Swanson et al. (1992) and Schalla et al. (1988b).

Unconfined and confined hydraulic conditions are present in the area. Beneath the process trenches, the water table is within the Hanford formation and Ringold Formation at a depth of 10.7 m (35 ft). At a depth of about 42.7 m (140 ft) is the Ringold lower mud unit, approximately 9.1 m (30 ft) thick, which acts as a confining layer. The hydraulic head of the confined aquifer beneath the lower mud is about 9.1 m (30 ft) higher than that of the unconfined aquifer. This fine unit decreases in thickness and pinches out to the north of the process trenches.

Transmissivity of the unconfined aquifer within the 300 Area was determined by aquifer tests and is reported in Swanson et al. (1992) and Schalla et al. (1988b). Transmissivity ranges between 368 and 9,200 m^2/day (4,000 and 100,000 ft^2/day). Flow velocity estimated from sampling of the perchloroethylene spill was about 10.7 m/day (35 ft/day).

5.2 INTERIM STATUS PERIOD GROUNDWATER MONITORING

The RCRA Compliance Groundwater Monitoring Project for the 300 APT was initiated in June 1985 and was completed in December 1996 upon incorporation of the 300 APT closure/postclosure plan into the Hanford Sitewide Permit. This project was designed as an assessment-level program for interim status facilities. The applicable monitoring requirements are described in 40 CFR 265 and WAC 173-303-645. A full description of the groundwater monitoring program is contained in the *Revised Ground-Water Monitoring Compliance Plan for the 300 Area Process Trenches* (Schalla et al. 1988a). The information below describes the historical interim status groundwater monitoring program for 300 APT.

5.2.1 Well Location and Design

The RCRA groundwater quality assessment monitoring network for the 300 APT was composed of 11 wells. The locations of the wells are shown in Figure 5-1. One well is upgradient of the trenches, two wells are adjacent to the trenches, and eight wells are downgradient from the trenches. These wells monitor the uppermost aquifer system. Well information is summarized in Table 5-1. Wells were constructed to comply with WAC 173-160 requirements. Geologist's logs for the monitoring wells are presented in *Ground-Water Monitoring Compliance Projects for Hanford Site Facilities: Progress Report for the Period January 1 to March 1, 1987* (PNL 1987, Schalla et al. 1988b).

The original groundwater monitoring plan cited 16 wells. However, most of these original 16 wells were not in compliance with RCRA standards. In 1986, Compliance Order (DE 86-133) was issued by Ecology requiring the monitoring network to be upgraded. Consequently, 18 more wells were installed during 1986 and 1987. This increased the total number of wells to 34. Between 1987 and 1991, 14 of the original noncompliant 16 wells were dropped from the sampling network, leaving 20 wells.

After 1991, 9 more wells were dropped leaving 11 wells in the network. These wells were removed for the following reasons. Well 399-1-19 was designed strictly as an observation well for aquifer testing and because it is only open at the bottom is not adequate for sampling. Wells 399-1-9, 1-16C, 1-17C, and 1-18C monitor only the uppermost confined aquifer that does not require monitoring. The bottom of the unconfined aquifer is still monitored by two wells. The final four wells, 399-4-11, 1-13A, 1-15, and 1-18B, were dropped because they provide redundant information because of their location and screened interval.

Only well 399-1-16B is currently detecting dangerous waste constituent contamination (trichloroethylene [TCE] and cis 1-2 dichloroethylene [DCE]) in 300 Area groundwater. Such detections were too localized to constitute a contaminant plume. The only identifiable 300 Area groundwater radioactive contamination plumes beneath the TSD unit were uranium and tritium. These were readily monitored by the 11-well monitoring network. Therefore, the 11 wells in the current monitoring network (3 upgradient and 8 downgradient) were adequate to monitor present and future chemical contamination conditions during the final stages of interim status.

Forty-two wells within the 300 Area were measured monthly for depth to water. Elevation of the water surface in the wells was computed from the monthly water level measurements and measurements taken before sampling. These data were published in the RCRA quarterly reports for interim status and were used to determine groundwater flow direction and gradient.

5.2.2 Sampling and Analysis Plan

The *Revised Ground-Water Monitoring Compliance Plan for the 300 Area Process Trenches* (Schalla et al. 1988a) described groundwater sample collection, analysis, quality assurance (QA), and quality control (QC). Laboratory analytical methods were adapted from *Test Methods for Evaluating Solid Waste: Physical/Chemical Methods* (EPA 1993). Procedures for groundwater sample collection and field chemical measurements were contained in *Procedures for Ground-Water Investigations* (PNL 1989). Analytical methods, QA, QC measures, and DQOs were contained in the *Quality Assurance Project Plan for RCRA Groundwater Monitoring Activities* (WHC 1992b).

Initially, the 300 APT groundwater monitoring program bypassed the "Detection Monitoring" stage and went directly into "Assessment Monitoring." This is because groundwater was already known to be contaminated and because it was determined at that time that the existing groundwater monitoring wells were inadequate to qualify as "alternate" groundwater monitoring, as described in 40 CFR 265.90(d). Under Ecology Compliance Order (DE 86-133), October 2, 1986, DOE established a compliant monitoring system in accordance with 40 CFR 265 and WAC 173-303-400(3) by installing 18 new wells in 1986 and 1987.

These wells were initially sampled monthly for a list of constituents from EPA guidance documents and from information provided by the facility manager concerning the composition of the wastes (Schalla et al. 1988b). However, only wells 699-S19-E13 (upgradient) and 399-1-3 (downgradient) were sampled for "the dangerous waste constituents in WAC 173-303-9905," and this sampling was performed quarterly, not monthly. Wells 399-1-17A, 1-10A, 1-14A, and 1-16B were sampled quarterly and other network wells were sampled biannually.

Since 1987, a very large amount of hydrogeologic and contamination data have been collected from 300 APT wells. Consequently, the reaction of the groundwater system to river stage and other hydrogeologic influences are well understood, as well as the rate, extent, and concentrations of groundwater contamination originating from the unit. Analytical data have indicated that since the ERA in 1991, uranium groundwater contamination from the 300 APT (as monitored in well 399-1-17A - the closest to the trenches) has dropped significantly. However, uranium results from two other downgradient wells (399-1-16A and 399-1-10A) show that the ERA had little effect on uranium concentration. Since discharges to the 300 APT ceased in late 1994, the uranium concentrations in well 399-1-17A have increased to pre-ERA levels. TCE concentrations in well 399-1-16B lowered starting in 1990 and more recently rose to levels greater than the MCL. DCE (cis-DCE) concentrations have steadily increased since the ERA in 1991. Further, in January 1995 the unit was permanently isolated from the process sewer (its only source of effluent) thereby eliminating the trenches as a source of groundwater recharge.

To account for these changes, the interim status groundwater monitoring plan was revised. The revised plan is presented in Lindberg, et.al., 1995. The revised plan became the final status compliance monitoring plan in accordance with condition II.F of the Hanford Facility Dangerous Waste Permit (WHC 1995). The wells that were sampled quarterly under this

program are identified in Table 5-1. Quarterly sampling events alternate between the full list (i.e., uranium, tritium, gross alpha, gross beta, and volatile organics) and the short list for organics only.

Sampling and analysis of the geologic materials and determination of aquifer properties occurred during the characterization of the site. Description of the hydrogeologic characterization activities and results are described in Schalla et al. (1988b). Aquifer and geologic properties are also described in Swanson et al. (1992).

5.2.3 QA and QC

The QC program for RCRA groundwater sampling and analysis includes internal laboratory checks and external checks. QA and QC for the 300 APT is part of the overall QA/QC program for RCRA groundwater monitoring for the Hanford Site Facility (WHC 1992b). The program is based on *Interim Guidelines and Specifications for Preparing Quality Assurance Project Plans* (EPA 1983), *RCRA Ground-Water Monitoring Technical Enforcement Guidance Document* (EPA 1986), and *Test Methods for Evaluating Solid Waste: Physical/Chemical Methods* (EPA 1993).

Procedures for collection and analysis of groundwater and geologic samples are contained in *Environmental Investigations Procedures* (BHI 1995) and *Procedures for Ground-Water Investigations* (PNL 1989). The data acquired from QC procedures are used to evaluate the analytical data statistically. The data provide estimates of the parameters used to evaluate the data, which include precision, accuracy, and detection limit (EPA 1993). Analytical results of QA/QC are included in RCRA quarterly reports (Appendix 5A).

5.3 RESULTS OF GROUNDWATER MONITORING

This section discusses the results of groundwater monitoring, including potentiometric levels and groundwater quality.

5.3.1 Potentiometric Levels

Water levels are monitored monthly in 42 wells throughout the 300 Area. These wells are completed both in the unconfined and confined aquifer beneath the 300 Area. The data have been presented in the RCRA quarterly reports, summarized in RCRA annual reports, and interpreted in the *Phase I Remedial Investigation Report for the 300-FF-5 Operable Unit* (DOE-RL 1993e).

The water level and flow direction in the unconfined aquifer within the 300 Area are primarily influenced by regional groundwater flow and fluctuations in river stage. The water level in wells monitoring the top of the unconfined aquifer near the river shore fluctuates as much as 1.2 m (4 ft) over a 1-year period except during anomalous high-water periods due to water-level control by dams to produce power. High stage occurs in late spring (May to June) and low stage in early fall (September to October). The groundwater flow direction of the unconfined aquifer is predominantly to the southeast within the 300 Area in the area near the process trenches. Perturbations of the water level in the unconfined aquifer near the river shore occur when the river stage is higher than the water level in the unconfined aquifer. This river high usually occurs in late spring.

The confined aquifer is monitored at a few locations in and around the 300 Area. The direction of flow appears to be east-northeast based on regional data. The potentiometric level of the confined aquifer is above land surface in well 699-S22-E9C and 0.6 to 1 m (2 to 3 ft) below the land surface in well 399-1-17C. An upward gradient exists between the confined and unconfined aquifers.

5.3.2 Groundwater Quality During Interim Status

RCRA groundwater monitoring in the 300 Area was initiated in 1987 for the process trenches. Results and interpretation of these analyses are presented in RCRA quarterly and annual reports. The latest interpretation can be found in the RCRA annual report for the most recent calendar year . The annual report for Hanford groundwater monitoring during 1996 (Lindberg et.al. 1995) has identified both dangerous waste and radiological contaminants of concern for the unconfined aquifer beneath the 300 Area. These contaminants are cis-1,2-dichloroethylene, trichloroethene, strontium-90, tritium, uranium, nitrate, iron and manganese. Strontium-90, tritium, and uranium are regulated under the Atomic Energy Act and are not considered to be dangerous waste constituents of concern (COCs). This is in conformance with Section 2.1.1.3.1 of the General Information Portion of the Hanford Facility RCRA Permit (Permit) (DOE 1996). Documentation for the 300-FF-5 Operable Unit addresses risk associated with the presence of contamination within the aquifer beneath the 300 Area.

The dangerous waste COCs listed were below the DWS at the process trenches monitoring wells during 1996 except for 1,2-dichloroethylene, manganese and iron. The October 1995 value of cis-1,2-dichloroethylene was 160 ppb and the June 1996 value was 140 ppb in well 399-1-16B. Well 399-1-16B monitors the bottom of the unconfined aquifer. The DWS for 1,2-dichloroethylene is 70 and 100 ppb for its components cis and trans -1,2-dichloroethylene (40 CFR 141, "National Primary Drinking Water Regulations").

The radiological contaminants of concern that can be associated with plumes within the 300 Area are tritium and uranium. COCs such as cis-1,2-DCE, iron, and manganese are confined

to one or two wells that monitor the lower portion of the unconfined aquifer (399-1-16B and 399-1-17B). Plume diagrams are given in the Hanford groundwater report for 1996 (Lindberg, et.al. 1995). The tritium plume, which emanates from the 200 Areas, has reached the northern portion of the 300 Area at a level that is equal to the DWS of 20,000 pCi/L (40 CFR 141). The uranium plume has two centers, one in the northern portion of the 300 Area near the process trenches and the other located in the southeastern section of the 300 Area near the 324 Building.

In 1991, an ERA was conducted on the process trenches to remove contaminated trench sediments. This action resulted in removal of about 1.2 m (4 ft) of sediment beneath the inflow end of the trenches and removal of sediments along the berm separating the trenches (DOE-RL 1992a). Analytical results of subsequent groundwater monitoring indicated a decrease in uranium concentrations in samples collected from well 399-1-17A until discharges ceased in December 1994 at which time uranium concentrations began to increase.

There have been two unplanned releases of perchloroethylene to the trenches. The first occurred in November 1982 when about 455 L (120 gal) of perchloroethylene was spilled into the trench, and the second in July 1984 when about 76 L (20 gal) was spilled (Schalla et al. 1988a). The plume movement was monitored. Results of this monitoring and a description of the plume can be found in Schalla et al. (1988a). Perchloroethylene breaks down into the components trichloroethene, dichloroethene, and vinyl chloride.

A release of ethylene glycol to the process trenches occurred on April 30, 1993. A pipe failed within the 309 Building releasing about 1,364 L (360 gal) of antifreeze containing ethylene glycol, which drained into a sump and then to the process sewer line. Groundwater from selected wells was sampled in May 1993, and again in September 1993. Ethylene glycol was not detected in any of the groundwater samples in May or Sept. 1993 or subsequently in any 300 Area wells.

The 300-FF-5 Operable Unit, which includes groundwater beneath the 300 APT, will be remediated under the authority of CERCLA (DOE-RL 1995a).

5.3.3 Groundwater Quality During Final Status

WAC 173-303-645(10) requires modification of the Permit to establish a corrective action program when dangerous waste constituents exceed concentration limits established by the Permit. Analytical results from the first semiannual groundwater sampling of the 300 APT performed under the final status program showed that such exceedances are occurring. These exceedances were anticipated given historical sampling results obtained during interim status groundwater monitoring.

Ecology was notified on June 17, 1997, that concentrations of DCE were exceeding action levels in the downgradient wells. Specifically, DCE exceeded the maximum contaminant level (MCL) of 70 ppb in well 399-1-16B within the 300 APT groundwater well network. That well is screened at the bottom of the unconfined aquifer. The results for DCE varied during this first sampling event from 150 to 190 ppb within the four independent monthly samples taken from December 1996 to March 1997. Also, the concentration of uranium (a nondangerous waste constituent) exceeded the proposed MCL of 20 ppm at three 300 APT network wells. The wells where exceedances occurred were 399-1-10A, 399-1-16A, and 399-1-17. All three wells are screened at the water table.

5.4 CORRECTIVE ACTION GROUNDWATER MONITORING PROGRAM

The WAC 173-303-645(11) Corrective Action Program requires the establishment and implementation of a groundwater monitoring program that is capable of demonstrating the effectiveness of the corrective action. This requirement states two general objectives:

- The program may be based on the requirements for a compliance monitoring program under WAC 173-303-645(10) and must be as effective as that program in determining compliance with the groundwater protection standard under WAC 173-303-645(3).

  A compliance monitoring program that met the objectives of the groundwater protection standard was established and adopted within the Permit (WHC 1995).

- Monitoring during corrective actions must be capable of determining the success of the corrective action program determined under the Record of Decision (EPA 1996) and as described in Section 8.3 of this plan.

  A revised groundwater monitoring plan has been prepared to reflect corrective action requirements (Lindberg et.al. 1995).

Due to the exceedances of DCE, a corrective action groundwater monitoring plan (Lindberg, et.al. 1995) was developed for implementation upon approval of the modification to the Permit establishing a corrective action program for the 300 APT. The 300 APT compliance monitoring well network system, as described in the compliance monitoring plan (WHC 1995) and as amended through a 1997 Class 1 Permit modification, will constitute the system to be monitored under the corrective action program. This system is suitable for monitoring the effectiveness of the corrective action (as defined in Section 8.3.2 of this closure/postclosure plan) and has been previously approved by Ecology (through incorporation into the Permit) as being capable of determining compliance with the groundwater protection standards established in WAC 173-303-645(3).

The following sections demonstrate how the corrective action monitoring requirements in WAC 173-303-645(11) will be met.

5.4.1 WAC 173-303-645(3) Groundwater Protection Standard

Washington Administrative Code 173-303-645(3) introduces the principal requirements that must be met to comply with the Dangerous Waste Regulations for releases from regulated units. It refers to WAC 173-303-645(4) Dangerous Constituents, WAC 173-303-645(5) Concentration Limits, WAC 173-303-645(6) Point of Compliance, and WAC 173-303-645(7) Compliance Period. The Groundwater Protection Standard for the regulated unit has been established by Ecology in the facility Permit.

5.4.1.1 WAC 173-303-645(4) Dangerous Constituents. Dangerous waste constituents were identified in the 300 APT compliance monitoring plan (WHC 1995). They are TCE and DCE, which will be monitored under the corrective action groundwater monitoring program (Lindberg, et.al. 1995).

5.4.1.2 WAC 173-303-645(5) Concentration Limits. Dangerous waste constituents from the regulated waste unit may not exceed concentration limits established by the Permit. Permit limits were defined previously in the 300 APT compliance monitoring plan (WHC 1995) and will be the same under corrective action. Concentration limits established are as follows:

Dangerous Waste Constituents:

TCE 5 μg/L - EPA Drinking Water Standard
DCE 70 μg/L - EPA Drinking Water Standard

300 APT Indicator Constituent:

Uranium (total; chemical analysis) 20 μg/L - EPA Proposed Drinking Water Standard

5.4.1.3 WAC 173-303-645(6) Point of Compliance. The point of compliance is a vertical surface located at the hydraulically downgradient limit of the waste management area that extends down into the uppermost aquifer underlying the regulated unit. For the 300 APT compliance monitoring program, downgradient wells 399-1-10A, 399-1-10B, 399-1-16A, 399-1-16B, 399-1-17A, and 399-1-17B are established as the point of compliance monitoring wells. These wells are the same as those monitored under the compliance monitoring program.

5.4.1.4 WAC 173-303-645(7) Compliance Period. The compliance period established in the corrective action groundwater monitoring plan (Lindberg, et.al. 1995) will be the number of years equal to the active life of the unit plus the closure period. Should dangerous waste constituent concentrations decrease to levels below the established concentration limits, a reevaluation of the compliance period will be made and a modification to the Permit and the 300 APT closure/postclosure plan will be requested. In accordance with WAC 173-303-645(7)(v), the corrective action program will be extended until it has been demonstrated that

the groundwater protection standard has not been exceeded for a period of three consecutive years.

5.4.2 WAC 173-303-645(8) General Groundwater Monitoring Requirements

The requirements described in WAC 173-303-645(8), including sampling and analysis requirements, well location, water level monitoring, and QA/QC requirements, will be met as described in the 300 APT corrective action monitoring plan (Lindberg, et.al. 1995). Newly collected data will be validated, verified, and made available quarterly on the Hanford Environmental Information System, and an evaluation of monitoring data will be reported in the Annual Groundwater Project Report for the Hanford Site.

Figure 5-1. Well Locations.

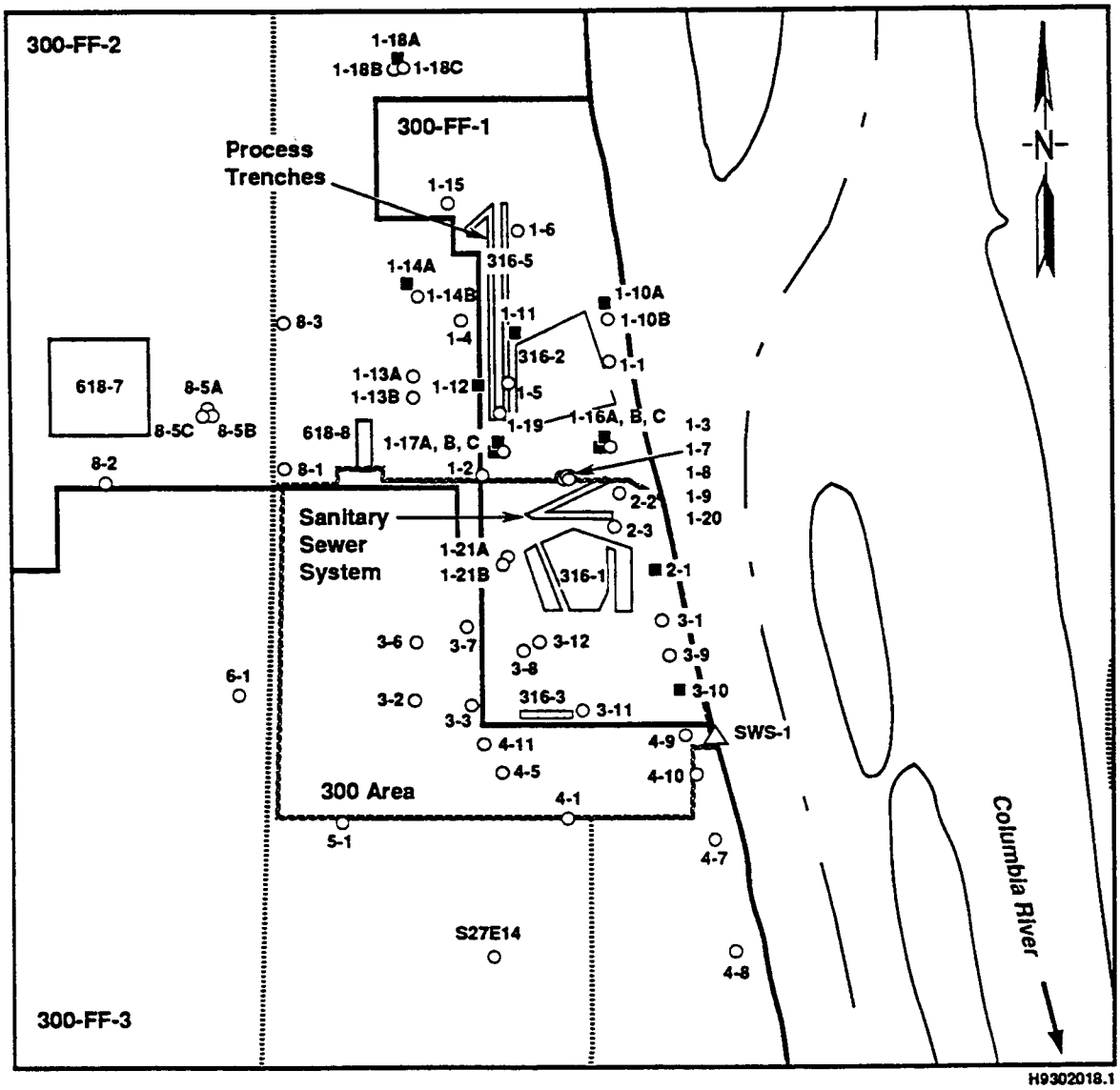

○ 1-12 Well Location and Number (Wells Prefixed by 399-, Except Those Beginning with S are Prefixed with 699-)

■ 4-7 Monitoring Network Well

△ SWS-1 Surface-Water Monitoring Station

····· Roads

Table 5-1. Monitoring Well for the 300 APT Network.

Well no. (399-)	Relative position	Hydrogeologic unit	Sampling Frequency
1-10A	Downgradient	Hanford/Ringold: Water Table	Quarterly[a]
1-11	Adjacent	Hanford/Ringold: Water Table	Semiannual
1-12	Downgradient	Hanford/Ringold: Water Table	Semiannual
1-14A	Adjacent	Hanford: Water Table	Quarterly
1-16A	Downgradient	Ringold: Water Table	Semiannual
1-16B	Downgradient	Ringold: Bottom of Unconfined Aquifer	Quarterly
1-17A	Downgradient	Ringold: Water Table	Quarterly
1-17B	Downgradient	Ringold: Bottom of Unconfined Aquifer	Semiannual
1-18A	Upgradient	Ringold: Water Table	Semiannual
2-1	Downgradient	Hanford/Ringold: Water Table	Semiannual
3-10	Downgradient	Hanford: Water Table	Semiannual

NOTE: Hydrogeologic units include the sandy gravels of the Hanford formation and silty sands of the Ringold Formation. Geologic information from Swanson et al. (1992).

[a]All quarterly sampling events will alternate between the full and the limited parameters lists described in Section 5.2.2.

CONTENTS

6.0 CLOSURE STRATEGY AND PERFORMANCE STANDARDS 6-1
6.1 CLOSURE STRATEGY 6-1
6.1.1 TSD Unit Closure Options 6-2
6.1.2 Groundwater Quality and TSD Unit Closure 6-4
6.2 CLOSURE PERFORMANCE STANDARDS 6-4
6.2.1 Minimize the Need for Further Maintenance 6-5
6.2.2 Control Dangerous Waste Escape to Protect Human Health and the Environment 6-5
6.2.3 Return Land to Appearance and Use of Surrounding Area 6-6
6.3 CLOSURE ACTIVITIES 6-6

FIGURES:

6-1. Closure Strategy F6-1

6.0 CLOSURE STRATEGY AND PERFORMANCE STANDARDS

6.1 CLOSURE STRATEGY

The TSD unit is anticipated to undergo modified closure to industrial health-based cleanup standards. This is consistent with future land use of the 300 Area as an industrial site and with current concentrations of RCRA contaminants in unit soil. Based on regulator acceptance of ERA characterization sampling and data, the unit will qualify for this modified closure, as provided for in the Hanford Facility Dangerous Waste Permit, without remediation for RCRA constituents. If TSD unit soils are remediated, the cleanup levels achieved for RCRA constituents by remediation could qualify the unit for clean closure; however, this is not a startup goal of the CERCLA remedial action. The modified and clean closure options are discussed in Section 6.1.2.

The strategy for performance of the physical activities required to close the unit will be as directed by the Tri-Party Agreement Action Plan (Ecology et al. 1994). This requires 300 APT TSD unit physical closure activities to be integrated with the CERCLA remedial action process for the 300-FF-1 Operable Unit. For closure of the 300 APT TSD unit, the CERCLA operable unit will perform all necessary TSD unit physical closure activities, such as soil and structure remediation, waste management, sampling and analysis, and postremediation care.

Nonradioactive contaminants within the TSD unit already meet MTCA Method C cleanup levels without further remediation. This is consistent with the future industrial land usage scenario. However, as indicated in Section 4.3.3, the CERCLA operable unit may be driven to remediate TSD unit soils in order to achieve dose- or risk-based levels for radionuclides. TSD unit soil cleanup levels and methods will be in accordance with the remedial action objectives and the remediation methods specified in the ROD for the 300-FF-1 Operable Unit. Soil cleanup levels and methods for the 300-FF-1 Operable Unit, which includes the 300 APT, will be decided by the regulators, following public input, and will be specified in the ROD. Regulatory decisions will be based on information evolving from the CERCLA 300-FF-1 Operable Unit RI/FS process and as proposed in the Phase III FS. This remedial action will be protective of human health and the environment by meeting the objectives of reducing site risk to an acceptable level. Remedial action objectives for the 300-FF-1 Operable Unit are as follows (DOE-RL 1995b).

- Reduce human exposure to chemical contaminants in soils in order to attain an estimated total lifetime ICR below 10^{-5} and a hazard index less than one, based on industrial land use. Alternatively, for radionuclide contaminants, a dose-based approach could be used to establish acceptable residual soil contaminant concentrations (Table 4-4).

- Control potential migration of contaminants into groundwater so that compliance with ARARs is achieved or maintained, including dose-based ARARs pursuant to the *Safe Drinking Water Act* (SDWA) or that the risk due to exposure to onsite groundwater concentrations via inhalation, ingestion and external exposure pathways would result in

an estimated total lifetime ICR of below 10^{-5} and a hazard quotient less than one, based on industrial land use.

- Control potential migration of contaminants into surface water via groundwater discharge to meet applicable surface water quality standards for protection of drinking water and aquatic organisms.

- Reduce current and future human receptor exposure to contaminants of concern through fugitive dust inhalation and volatile organic contaminant emissions to attain a lifetime ICR of below 10^{-6}, an accumulative ICR of 10^{-5} for multiple contaminants, and a hazard index less than one for human receptors off the Hanford Site.

- Minimize any adverse ecological effects due to site remediation.

The CERCLA ROD will not be available until after submittal of Revision 1 of this closure plan to regulators and following public review. However, cleanup levels and remediation methodologies are presented for public review in the addendum to this document and in the 300-FF-1 and 300-FF-5 proposed plan. Although the CERCLA unit will be performing TSD unit closure activities, those activities will be reviewed by an independent registered professional engineer to ensure that the TSD closure meets WAC 173-303-610 performance standards.

6.1.1 TSD Unit Closure Options

TSD unit closure options and the criteria for these closure options are described in this section. The logic used in arriving at the appropriate 300 APT TSD unit closure option is depicted in a flow diagram in Figure 6-1.

6.1.1.1 Action Levels Relating to Closure Options. Action levels are concentrations of analytes of interest that prompt an action (e.g., soil removal/treatment or further evaluation). They also can represent screening criteria for selection of the most appropriate TSD unit closure option of those presented in WAC 173-303-610 (i.e., clean closure) or in the Hanford Facility Permit (Ecology 1994a) (i.e., modified closure).

Action levels can be background, limit of quantitation (LOQ), or HBL based on MTCA, WAC 173-340. HBLs are calculated by using chemical-specific variables for toxicity and carcinogenicity provided in EPA's Integrated Risk Information System (IRIS) database relating human health to action levels. The IRIS values are updated periodically and are used in the formulas of MTCA and/or HSBRAM, which are functionally equivalent in the calculation of dangerous waste HBLs for soil (Section 1.2.3.2). The health-based soil cleanup levels will be based on the IRIS values that are current at the time of closure plan approval.

6.1.1.2 Clean Closure. Action levels that would qualify the unit for clean closure are background as defined in *Hanford Site Background: Part 1, Soil Background for Nonradioactive Analytes* (DOE-RL 1994b), LOQ, and the MTCA Method B residential

health-based soil cleanup levels found in WAC 173-340-740. Dangerous waste concentrations remaining in TSD unit soils, as identified in Table 4-1, currently exceed clean closure limits. Consequently, the unit cannot clean close without further soil remediation.

One alternative discussed in the 300-FF-1 Operable Unit Phase III Feasibility Study (DOE-RL 1995b) is to remediate TSD unit soils for radionuclides. This remediation could reduce dangerous waste constituent concentrations to below clean closure limits. If, after remediation, verification sampling and analysis demonstrates clean closure for dangerous waste constituents, Ecology will be notified that the clean closure option has been selected from the alternatives in the closure plan.

If data demonstrate that contaminants of concern to groundwater in TSD unit soils also meet the clean closure criteria and that groundwater is not contaminated with dangerous waste constituents, postclosure care groundwater monitoring in accordance with WAC 173-303-645 is not required. Certification of closure plan implementation will be provided to Ecology after closure activities have been completed. If clean closure is attained, no postclosure care will be necessary and the unit-specific Part A Permit Application, Form 3, will be withdrawn.

6.1.1.3 Modified Closure. Current dangerous waste concentrations in TSD unit soils, as identified in Table 4-1, qualify site soils for modified closure with no remediation. The Hanford Facility Dangerous Waste Permit (Ecology 1994a) has identified the qualifying criteria for modified closure as MTCA Method C (WAC 173-340-745) industrial HBLs. If the TSD unit proceeds with modified closure as specified in the Hanford Facility Dangerous Waste Permit, notice of closure plan implementation will be provided to Ecology. The unit will then enter a postclosure care period that will last until final closure conditions are met.

The Hanford Facility Dangerous Waste Permit (Section II.k) requires postclosure unit care for a TSD unit undergoing modified closure. This care is described in Chapter 8.0 of the closure plan. Upon completion of this postclosure care, certification of final closure to the standards reflected in the closure plan will be made and provided to Ecology. A request to withdraw the facility-specific Part A Permit Application, Form 3, will be forwarded to Ecology.

6.1.1.4 Landfill Closure. As a surface impoundment, the 300 APT is required by WAC 173-303-610 to have a contingent closure plan. However, the unit is considered characterized and does not exceed modified closure levels for dangerous waste contaminants. Consequently, landfill closure will not be required for dangerous waste constituents. Further, excavation and disposal is a remedial alternative for the operable unit. Under this alternative, TSD unit soils that are above remedial action objectives for radionuclides would be excavated and disposed. Consequently, the TSD unit would not be closing with either dangerous or radioactive waste in place above remedial action objectives (DOE-RL 1995b). Therefore, landfill closure would not be required.

6.1.2 Groundwater Quality and TSD Unit Closure

In the past, groundwater quality has been affected by the operation of the 300 APT. Groundwater and 300-FF-1 subsurface soil [deeper than 4.6 m (15 ft)] remediation is deferred to the CERCLA 300-FF-5 Groundwater Operable Unit (DOE-RL 1993d). However, protection of groundwater by eliminating the migration of soil contamination is a remedial action objective for the 300-FF-1 Operable Unit (Section 6.1).

The MTCA provides ARARs to the CERCLA activity requiring consideration of cross-media contamination and protection of groundwater from surface soil contamination. The Phase III FS approach is to protect groundwater and to reduce unit risk to below remedial action objectives. This approach will also ensure that groundwater emerging as surface water, which could be used for drinking, will meet surface water quality standards of WAC-173-201A.

Groundwater monitoring (Chapter 5.0) indicates that nonradioactive contaminants of concern to the groundwater from the TSD unit are above DWS. The results of the 300-FF-5 RI indicate that contamination from the operable unit and TSD unit soils is not a major concern (DOE-RL 1993e). The Phase III FS (DOE-RL 1995b) indicates that the contaminants of concern to the 300-FF-1 Operable Unit and the potential contaminants of concern for 300-FF-5 Operable Unit that are in surface soils cannot be transported to groundwater in sufficient quantities to further degrade groundwater (DOE-RL 1995b).

An assessment-level groundwater monitoring program was established (Schalla et al. 1988a) for the 300 APT during interim status. As the closure plan was incorporated into the Hanford Facility Dangerous Waste Permit in December 1996, a compliance monitoring program (WHC 1995) was implemented in accordance with WAC 173-303-645(10). Exceedances of the concentration limits (described in Section 5.3.3 of this closure/postclosure plan) established under this program were determined in June 1997 during the first semi-annual period of groundwater monitoring (December 1996 - March 1997) requiring the development of a groundwater monitoring system under a corrective action program (WAC 173-303-645[11]). Groundwater monitoring will continue under the following conditions: (1) as a corrective action groundwater monitoring program during a modified closure period; (2) until the groundwater sampling results confirm that TSD unit constituents no longer adversely impact groundwater quality; or (3) until the operable unit confirms that groundwater is not contaminated. In accordance with Section 6.3.1 of the Tri-Party Agreement Action Plan, RCRA TSD unit clean closure will not occur during a period of groundwater monitoring under cases (1) and (2).

6.2 CLOSURE PERFORMANCE STANDARDS

The closure performance standards of WAC 173-303-610(2) require that the owner/operator of a TSD unit close the unit in a manner that (1) minimizes the need for further maintenance; (2) controls, minimizes, or eliminates postclosure escape of dangerous waste to the extent necessary to protect human health and the environment; and (3) returns the land to the appearance and use of surrounding land areas.

6.2.1 Minimize the Need for Further Maintenance

The extent of future site maintenance depends on the closure option chosen for the TSD unit (i.e., clean or modified closure). No further maintenance would be required under clean closure regardless of future land use. Maintenance, monitoring, and inspections would be necessary under modified closure as discussed in Chapter 8.0.

6.2.2 Control Dangerous Waste Escape to Protect Human Health and the Environment

Threshold criteria for all remedial alternatives under consideration by the CERCLA RI/FS require controlling exposures and eliminating the escape of contaminants to the environment, as discussed in Section 7.3.1.

The following actions have been taken in advance of closure activities to control and minimize dangerous waste at the unit.

- Administrative measures were put in place in 1985 to eliminate all discharges of hazardous waste to the process sewer system.

- A groundwater monitoring network has been established around the facility (Schalla et al. 1988b).

- In the summer of 1991, an ERA was conducted at the site to reduce the future impacts of the contamination to groundwater. Contaminated sediments located at the bottom and sides of the trenches were excavated and relocated to impoundment areas within the TSD unit. Characterization and post-ERA soil sampling of both trenches were performed (DOE-RL 1992a).

- In January 1992, the flow rate to the process trenches was reduced to 1,137 L/min (300 gal/min). This was done to reduce potential impacts to groundwater and the Columbia River.

- In January 1995, the 300 APT was physically isolated from receiving any further discharges.

- The 300-FF-1 Operable Unit RI/FS has been conducted to determine the nature and extent of contamination within the TSD, and has provided alternatives for remediation.

The entire 300 Area, including the 300-FF-1 Operable Unit and the 300 APT TSD unit location, is expected to remain an industrial area for the foreseeable future (Drummond 1992). Administrative controls will restrict public access, thereby eliminating risk to the general public.

The RI has identified the only substantive risk as being to onsite industrial workers; their exposures will be administratively controlled.

6.2.3 Return Land to Appearance and Use of Surrounding Area

The appearance and use of the 300 APT unit site after closure will be consistent with the future use of the property as an industrial site. If an immediate use of the property requiring the construction of impervious surfaces is not indicated, the area will likely be contoured to control drainage and revegetated.

6.3 CLOSURE ACTIVITIES

The following steps to closure consider only the remedial alternatives that are applicable to the TSD unit and are currently under consideration by the CERCLA remedy selection process (these alternatives are discussed in Chapter 7.0 of this document). These activities will be implemented during the remedial action phase based on the descriptions in the remedial action work plan and its support documents.

- If TSD unit soil contamination is remediated, it will be accomplished under CERCLA authority. The remedy and cleanup levels selected by the CERCLA ROD will protect human health and the environment. TSD unit piping and structures may be demolished and removed as needed to gain access to underlying unit soils for remediation.

- Final status groundwater monitoring under WAC 173-303-645 will be initiated.

- TSD unit waste will be managed under CERCLA authority and stored and disposed of as agreed to with RCRA regulators.

- If RCRA closure verification sampling and analysis are required, such activities will be performed by CERCLA according to the approved 300-FF-1 Operable Unit SAP.

- The analytical results of TSD unit sampling will be evaluated by the CERCLA unit for achievement of remedial action objectives and by the RCRA unit to determine the appropriate TSD unit closure option (i.e., clean or modified).

- Upon completion of the remedial action, the site will be restored [e.g., excavation(s) backfilled, recontoured, revegetated] as appropriate for future land use.

- Unit closure certification will be performed.

- Postremediation care for modified closure will be performed if necessary. Certification of final closure will be performed on completion of postremediation care.

Closure activities will be monitored by an independent registered professional engineer who will certify that closure activities were accomplished in accordance with the specifications of the approved closure plan. The certification will be sent by registered mail or an equivalent delivery service to Ecology and the EPA, Region 10. The closure activities will be completed in accordance with the schedule contained in this plan (Figure 7-2) after approval of this plan by the EPA and Ecology.

Figure 6-1. Closure Strategy.

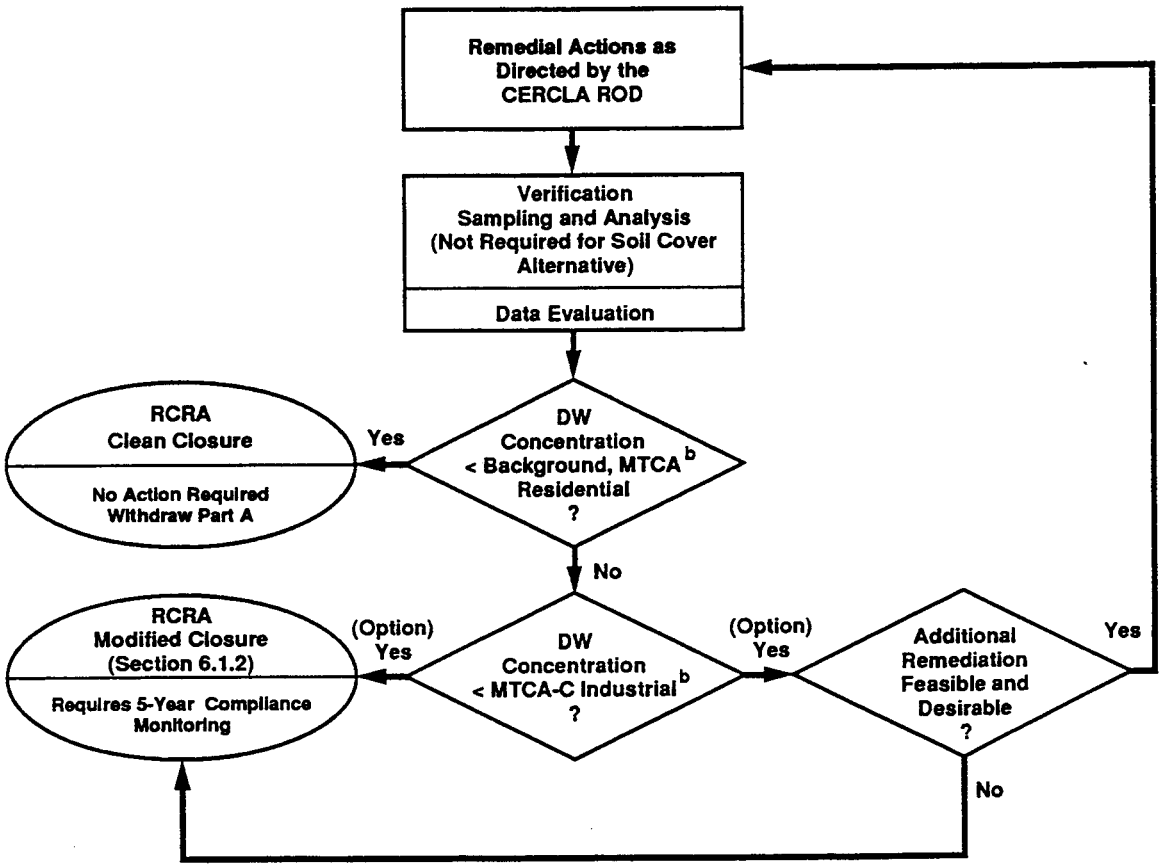

Note: [a] TSD unit is the sole source of dangerous waste.
[b] DW concentration already shown to be below MTCA-C Industrial Standards.

Background = Hanford Site-wide background threshold (upper limit range of concentrations) for soil (DOE-RL 1992b).

CERCLA = *Comprehensive Environmental Response, Compensation, and Liability Act of 1980.*

Clean Closure = Closure based on the criterion that dangerous waste is not present in concentrations above the greater value of background, LOQ, or residential; no further remedial action to be taken.

DW = Dangerous waste as defined in WAC 173-303.

LOQ = Limit of quantitation; the level above which quantitative analysis can be obtained with a specified degree of confidence; generally $10\sigma \pm 3\sigma$.

Modified Closure = Closure based on the criterion that dangerous waste concentrations are greater than residential, but less than or equal to industrial; compliance monitoring is required.

MTCA = *Model Toxics Control Act* (WAC 173-304) residential and industrial formulas.

RCRA = *Resource Conservation and Recovery Act of 1976.*

H9502017.2

CONTENTS

7.0 CLOSURE ACTIVITIES 7-1
7.1 STORED WASTE REMOVAL 7-1
7.2 REMEDIAL ALTERNATIVES 7-1
7.2.1 Soil Cover 7-2
7.2.2 Consolidation and Soil Cover 7-2
7.2.3 Selective Excavation and Disposal 7-3
7.2.4 Excavation, Soil Washing, and Fines Disposal 7-4
7.3 SAMPLING AND ANALYSIS 7-6
7.4 REMEDIAL ACTION FOR RESIDUAL CONTAMINATION 7-8
7.4.1 TSD Unit Remediation Activities 7-8
7.4.2 Soil Washing 7-10
7.4.3 Waste Management 7-11
7.5 OTHER CLOSURE ACTIVITIES 7-12
7.6 CONTINGENCY CLOSURE PLAN 7-12
7.7 PERSONNEL TRAINING 7-13
7.7 SCHEDULE OF CLOSURE 7-13
7.8 AMENDMENT OF CLOSURE PLAN 7-14
7.9 CERTIFICATION OF CLOSURE AND SURVEY PLAT 7-14

APPENDICES:

7A ANALYTICAL DATA AND VALIDATION PACKAGE FOR THE 300 AREA PROCESS TRENCHES [RESERVED] ..... APP 7A-I

7B TRAINING COURSE DESCRIPTIONS ..... APP 7B-I

7C SUMMARY OF PRE- AND POST-EXPEDITED RESPONSE ACTION ANALYTICAL DATA ..... APP 7C-I

FIGURES:

7-1. Proposed Soil Washing Process Flow Diagram F7-1
7-2. Process Flow Diagram for Ex Situ Fixation F7-2
7-3. Schedule for Closure F7-3
7-4. Typical Closure Certification Document F7-4

7.0 CLOSURE ACTIVITIES

The physical activities required to close the 300 APT TSD unit will be integrated with the CERCLA remedial action process for the 300-FF-1 Operable Unit. These activities will reflect the closure specifications stipulated in the ROD for the 300-FF-1 Operable Unit. ROD closure specifications are not yet available but are anticipated to be consistent with one of the alternatives presented in the Phase III FS proposals. The closure plan presents the physical remedial activities and sampling and analysis required for each alternative presented in the Phase III FS applicable to TSD unit closure. Groundwater remediation will be addressed by 300-FF-5 Operable Unit CERCLA documentation.

7.1 STORED WASTE REMOVAL

The 300 APT unit consists of two unlined infiltration trenches that no longer receive effluent from the 300 Area process sewer. There is currently no containerized waste requiring removal from the 300 APT TSD unit because none was ever stored there. No record exists of direct dumping of any other waste form (e.g., buried drums, contaminated equipment) at the trenches.

Contaminated unit soils and sediments were relocated within the TSD unit as a regulator-approved activity of the ERA (Section 2.4). These remain at the unit in direct contact with the ground and are covered. These sediments are contaminated unit media, not stored waste, and will be remediated in a manner consistent with other unit soils.

Liquid waste is no longer discharged to the trenches. The trenches have been allowed to dewater through percolation and evaporation. This leaves only residual soil and structure contamination for physical closure activities.

7.2 REMEDIAL ALTERNATIVES

The remedies being considered by the Phase III FS for process waste units including the 300 APT are soil cover; consolidation and soil cover; selective excavation and disposal; or excavation, soil washing, and fines disposal. All of these methods are described in detail in the *Phase III Feasibility Study Report for the 300-FF-1 Operable Unit* (DOE-RL 1995b). The remedy selection criteria used in preparing the list of alternatives included protection of human health and the environment; compliance with ARARs; long-term effectiveness; short-term effectiveness; reduction in mobility, toxicity, and volume; cost; state acceptance; and community acceptance (DOE-RL 1993d).

All TSD unit alternatives will require short-term (during remedial action) and long-term (after remedial action) monitoring and institutional controls. Short-term monitoring is discussed in Section 7.4.1, and long-term monitoring is discussed in Chapter 8.0. Except for the soil cover

alternative, all remedial alternatives applicable to the TSD unit will also share the common elements of excavation, transportation of contaminated soils, waste fixation, and waste disposal, as discussed in Section 7.4.1. Field screening will be performed on excavated materials to determine the presence or absence of dangerous waste prior to disposal or consolidation.

7.2.1 Soil Cover

Soil cover provides protection from direct exposure to contaminants present in soils. This alternative also limits the infiltration of water at process units and will therefore limit migration of contaminants through the soil to groundwater preventing contamination of groundwater above PRGs (however, this infiltration is considered minimal). Key components of this alternative consist of the following:

- Site grading followed by compaction as needed to provide proper drainage and prevent settlement
- Placement of silty soil cover over process waste units where soil contaminant concentrations exceed PRGs (see Section 6.2.3 of DOE-RL 1995b)
- Site grading for proper drainage
- Establishment of vegetation over disturbed areas
- Implementation and maintenance of institutional controls and monitoring (see Sections 6.2.1 and 6.2.2 of DOE-RL 1995b).

Construction of the silty soil cover is a relatively cost-effective method of reducing infiltration of precipitation and potential protection of groundwater from the migration of source contaminants. The soil cover would not, however, address any potential contamination located at the water table. This would be addressed through natural attenuation and flushing as described in the 300-FF-5 RI/FS (DOE-RL 1995a). The process trenches would undergo a modified closure. Institutional controls and monitoring would be required to ensure the integrity of the soil cover and to verify its effectiveness (see Sections 6.2.1 and 6.2.2 of DOE-RL 1995b).

7.2.2 Consolidation and Soil Cover

This alternative provides onsite containment of contaminated soil from the process waste units and consists of the following key elements:

- Consolidation of all excavated soil with contaminant concentrations above PRGs
- Site grading for proper drainage

- Construction of a soil cover over the consolidated contaminated soil (see Section 6.2.3 of DOE-RL 1995b)

- Establishment of vegetation over disturbed areas

- Implementation and maintenance of institutional controls and monitoring (see Sections 6.2.1 and 6.2.2 of DOE-RL 1995b).

This alternative minimizes both the amount of excavation and soil cover required because soils with the relatively deepest and greatest concentration of contamination are already under the planned cover areas and can be left in place, while surrounding thinner, relatively less contaminated soils layers can be consolidated on top.

All soils that exceed PRGs in the 300 APT, Landfill 1b, and the North Pond Scraping Disposal Area would be consolidated into the area of the North Process Pond and 300 APT and capped with a soil cover. No soil segregation during excavation is assumed. The excavated soils from the process and sanitary sewers, the Sanitary Trenches, and the South Pond Scraping Disposal Area would be consolidated into the South Process Pond and capped with a soil cover. Excavation and soil cover areas for this alternative will depend on the final remediation goal. Approximate excavation and soil cover locations are shown in Figure 6-6 of DOE-RL (1995b). Estimated quantities for this alternative are presented in Table 6-3 of DOE-RL (1995b). Additional design assumptions are presented in Section 6.2 of DOE-RL (1995b).

7.2.3 Selective Excavation and Disposal

This alternative provides for the removal of contaminated soil from the 300 APT and the remaining process waste units and disposal in the ERDF. The alternative consists of the following key elements:

- Excavation and segregation of soil with contaminant concentrations above PRGs (see Section 6.2.4 of DOE-RL 1995b)

- Onsite fixation of a small percentage of contaminated soils, as required to meet ERDF acceptance criteria (see Section 6.2.7 of DOE-RL 1995b)

- Transportation of contaminated soil to the ERDF for disposal (see Sections 6.2.5 and 6.2.6 of DOE-RL 1995b)

- Placement and compaction of separated soils meeting PRGs in the excavated areas

- Site grading for proper drainage

- Establishment of vegetation over disturbed areas

- Implementation and maintenance of institutional controls and monitoring (see Sections 6.2.1 and 6.2.2 of DOE-RL (1995b).

Limited institutional controls and monitoring for the 300 APT and the 300-FF-1 process waste units would be required. Groundwater monitoring would be performed to confirm that remediation is effective and that there is no groundwater impact. Implementation of this alternative assumes that the process trenches waste unit is remediated in accordance with State Dangerous Waste (RCRA) Regulations (WAC 173-303-610). To avoid storage of contaminated soil, excavation would not begin until an ERDF cell has been constructed and permitted for site wastes. Estimated quantities for this alternative are given in Table 6-3 of DOE-RL (1995b). Additional design assumptions are presented in Section 6.2 of DOE-RL (1995b). This alternative is functionally equivalent to selective excavation and disposal with waste management considerations given in Section 7.4.3 of this plan.

7.2.4 Excavation, Soil Washing, and Fines Disposal

This alternative includes the same elements as Alternative P-3, with the addition of soil washing in an attempt to reduce the overall quantity of soil requiring disposal. This alternative would be a modified closure unless verification sampling and analysis is performed and data show levels of contamination at clean closure less than MTCA B. The alternative consists of the following key elements:

- Excavation and segregation of soil with contaminant concentrations above PRGs (see Section 6.2.5 of DOE-RL 1995b)

- Treatment of contaminated soil by soil washing to reduce the volume of contaminated material requiring disposal

- Fixation of the fines from soil washing to meet ERDF acceptance criteria

- Transportation of the fines to the ERDF for disposal (see Sections 6.2.6 and 6.2.7 of DOE-RL 1995b)

- Placement and compaction of treated soils meeting PRGs in the excavated areas

- Site grading for proper drainage

- Establishing vegetation over disturbed areas

- Implementing and maintaining institutional controls and monitoring (see Sections 6.2.1 and 6.2.2 of DOE-RL 1995b).

The purpose of this alternative is to minimize the volume of soil requiring disposal through minimal excavation and soil washing. Excavation will only be used to remove soils that exceed PRGs. Implementation of this alternative assumes that the 300 APT TSD waste unit is remediated in accordance with state dangerous (RCRA) regulations (WAC 173-303-610) and per Section II.K of the Hanford Facility Dangerous Waste permit.

Limited institutional controls and monitoring for the 300-FF-1 process waste units would be required. Groundwater monitoring would be performed to confirm that remediation is effective and that there is no groundwater impact. Because no contaminants would remain onsite in concentrations above PRGs, only occasional monitoring would be necessary. To avoid storage of contaminated soil, excavation would not begin until an ERDF cell has been constructed and permitted for site wastes.

Physical soil washing separates soil fractions with high concentrations of contaminants from relatively clean soil fractions. Treatability studies for 300 Area soils have found that the contaminants of concern are preferentially concentrated in the fines (silt and clay) and that the coarser soils (gravel and sand) are relatively clean. Figure 6-7 of DOE-RL (1995b) presents the process flow diagram for soil washing, which is based on experience gained during the ART treatability test (Section 3.1.6 of DOE-RL 1995b). Separation breakpoints (e.g., screen sizes) are preliminary and subject to change in the final design. Estimated quantities for this alternative area presented in Table 6-3 of DOE-RL (1995b). Additional design assumptions are presented in Section 6.2 of DOE-RL (1995b).

The soil washing process would begin with a dry screening, first through a grizzly and then through a vibrating screen. Oversize soil (>100 mm) is expected to meet remediation goals. The undersize soil from the vibrating screen (<100 mm) would then go through an attrition mill to break down agglomerates (e.g., green material). Soil from the mill would be passed through a wet vibrating screen. Oversize soil (100 - 4 mm) from this screening is expected to meet remediation goals. Undersize soil from the wet screen would be passed through hydrocyclones to separate sand from fines (silts and clays).

The sand would be washed by attrition scrubbing, which uses particle abrasion during vigorous mixing to scrub the more-contaminated surface off of the particles. Attrition scrubbing produces additional fines (i.e., the removed surface). Froth from soil washing (i.e., floating soil particles) would be combined with the other fines for dewatering and disposal. The soil-water slurry from attrition scrubbing would be recycled through the hydrocyclone to remove fines. Water would be drained from the washed sand using a dewatering screen.

The fines from the hydrocylones would be in a soil-water slurry. The fines would be separated from the water by gravity separation, using a flocculent to enhance settling. The settled fines would be further concentrated by thickening and then dewatered in a filter press. Fixation additives (see Section 6.2.7 of DOE-RL 1995b) would be added after dewatering and mixed with the fines in a pug mill. The fixation process would be designed and operated to meet ERDF leachate criteria.

Water from dewatering sand and fines would be recycled in the process. The soil washing process requires addition of water (makeup water) to replace water retained by treated soils (both clean and contaminated fractions). Additional water treatment is required only on completion of soil washing, to treat contaminated water in equipment and piping. An estimated 378,540 L (100,000 gal) of washwater would remain following processing and would be treated.

Soils meeting the direct exposure PRGs (e.g., cobbles, gravel, and sand) would be used as backfill for the excavated areas. Soils not meeting the PRGs would be either recycled for further washing or disposed with the fines, depending on the degree of residual contamination. The dewatered and fixated fines would be hauled to the ERDF for disposal.

7.3 SAMPLING AND ANALYSIS

Sampling of TSD unit media will be performed by the CERCLA sampling team in accordance with the approved CERCLA SAP and quality assurance project plan (QAPjP). However, soil sampling will only be required for excavations and clean closure options. The SAP/QAPjP will be initiated during the CERCLA remedial design phase, which occurs after receipt of the ROD. As directed in Section 7.8 of the Tri-Party Agreement Action Plan, CERCLA unit sample planning will follow a DQO process as does RCRA sampling (Ecology et al. 1994). The SAP will evolve from the DQO process and RCRA and CERCLA regulator agreements as guided by 300-FF-1 ROD specifications and RCRA requirements. The DQO process, remedy-specific sampling, and data evaluation are discussed in this section.

7.3.1 Data Quality Objectives and the Sampling and Analysis Plan

RCRA regulators will be involved with CERCLA regulators in the DQO process from which the CERCLA SAP will evolve. The method for involving RCRA regulators in the DQO process is discussed in Section 1.2.4.

The DQO process will resolve TSD unit sampling issues such as analytes of interest, sample location, number of samples, number and frequency of field QC samples (i.e., trip blanks, equipment blanks, splits, and duplicates), sampling methodology, analytical methods, laboratory protocols, laboratory QC samples (e.g., spikes, duplicates, reagent blanks, method check, and column check), sample validation, data error tolerances, acceptance of sitewide background values (DOE-RL 1994b), and data evaluation methods. Sample handling, packaging, and shipping, chain of custody, and QC samples will be as required by internal, approved procedures (WHC 1989).

7.3.2 Remedy-Specific Sampling

Sampling will be appropriate to the applicable remedial alternatives under consideration for CERCLA remediation of radionuclides. RCRA constituent concentrations are already below MTCA Method C industrial cleanup levels that will qualify the TSD unit for modified closure (Section 6.1). These alternatives are selective excavation and disposal; consolidation and soil cover; and excavation, soil washing, and fines disposal. Sampling for each alternative could reasonably proceed as follows. Sampling for consolidation and soil cover would be similar to sampling for selective excavation and disposal because of the common elements of excavation and offsite removal of potentially RCRA contaminated soil.

7.3.2.1 Sampling for Excavation and Disposal. In-process field screening, postremediation verification sampling, and laboratory analysis will be performed. Field screening will be used to support excavation of the TSD. Laboratory verification samples would be required at TSD unit excavations before backfilling to verify the absence of contamination above MTCA Method B cleanup levels for clean closure and MTCA Method C cleanup levels for modified closure). TSD unit structure demolition debris could require sampling for purposes of waste designation before disposal (Section 7.4.3). In any event, the debris rule listed under 40 CFR 268.45 will be followed.

7.3.2.2 Sampling for Excavation, Soil Washing, and Fines Disposal. Sampling for this alternative could include the in-process excavation monitoring and field screening, postremediation excavation verification monitoring, structure debris sampling, and laboratory sampling of excavations before backfilling, as described in Section 7.3.2.1.

During soil washing, in-process field screening and monitoring should be performed to verify process efficiency for the remediated fraction as potential backfill material. Laboratory samples could be taken periodically to provide a higher QC confirmation of the field results. The process specifications for soil washing should be specified in the SAP as a decision rule for determining when remedial action objectives have been achieved and treatment may cease. Where in-process field screening and monitoring indicate that process specifications have not been met, the deficient fraction could be rerun or disposed of appropriately.

The trenches will be backfilled using noncontaminated fill material from offsite or the product of the onsite treatment process, and then possibly covered with clean soil. In either case, sampling of the restored backfilled trenches will not be required. The remediated backfill material will already be shown to be below specified action levels and will require no further investigation, and material from offsite will originate from a noncontaminated site.

7.3.3 Field Documentation

The CERCLA sampling field team leader will maintain a logbook during soil sampling activities in accordance with internal approved procedures (BHI 1995). Information pertinent to ongoing activities at the closure area will be recorded in the logbook in a legible manner with indelible ink.

7.3.4 Evaluation of Data

All analytical data obtained during TSD remediation will be available for DOE, EPA, and Ecology to evaluate per the Tri-Party Agreement.

The procedures for data evaluation results reporting will include a statistical analysis of analytical results and/or comparison of the final concentrations to RCRA closure option cleanup levels (Section 6.1). This evaluation, in support of RCRA closure option selection, will use laboratory detection limits, Hanford Site background thresholds (DOE-RL 1994b), and specified HBLs as screening criteria. The sampling data package and the results of the evaluation report, as applicable to the TSD unit, will be incorporated into this closure plan as Appendix 7B as they become available.

7.4 REMEDIAL ACTION FOR RESIDUAL CONTAMINATION

The 300-FF-1 Phase I and II FS (DOE-RL 1993c) examined several technologies and remedial alternatives for remediation of operable unit and TSD unit contamination. Data from the 300-FF-1 RI were used to conduct a preliminary screening of alternatives. The Phase III FS has identified remedial alternatives (Section 7.2) and the PRGs that can meet the remedial action objectives. Implementation of these remedial alternatives is discussed in this section.

7.4.1 TSD Unit Remediation Activities

Remedial action alternatives include but are not limited to excavation and disposal, and excavation, soil washing, and fines disposal. The activities common to each of these alternatives include demolition and removal of unit piping, structures, and components; soil excavation; monitoring the excavation process; transportation of contaminated soils and debris; surface water management; waste fixation; and disposal of soils. Excavation, monitoring, and transportation also applies to the consolidation and soil cover alternative.

7.4.1.1 Demolition and Removal of TSD Piping, Structures, and Components. The TSD unit structures and equipment include the concrete weir box and the approximately 6.1 m (20 ft) of 61-cm (24-in.) vitrified clay process sewer piping from the weir box to the TSD unit boundary fence. TSD unit piping and structures may be demolished and removed to gain access to

underlying soils for removal or treatment. TSD unit structure debris that cannot be disposed of as remediation waste at the ERDF or under a surface barrier must be sampled before disposal (Section 7.4.3).

The birdscreens and TSD unit boundary fencing (if removed) did not contact effluent and are not expected to be contaminated. However, they will be screened for contamination as indicated in the approved SAP. If contaminated, they will be disposed of as remediation waste. If not contaminated, they will be collapsed and disposed in a landfill.

7.4.1.1.1 Monitoring. Short-term monitoring will be conducted during remediation to protect workers, control adverse offsite side effects, provide QC, and evaluate performance of the remedy. Airborne dust or emissions are the primary offsite concern. Air sampling stations will be established around the perimeter of the 300 Area, and air samples will be routinely collected and analyzed in accordance with an approved project health and safety plan. Other monitoring will include radiation monitoring for purposes of worker safety and process QC. The specifics of monitoring programs used for process QC purposes could be determined as a portion of the DQO process for the SAP, or could be determined through the appropriate CERCLA design documents. Site monitoring information will be added to the closure plan as available.

7.4.1.1.2 Excavation. Soils would be excavated using backhoes and bulldozers to load trucks that will move soil to stockpiles. Depending on the alternative selected, soils will be segregated as clean soil, contaminated soil for direct disposal, or contaminated soil for treatment. Segregation could be automated (e.g., by using conveyor belts). Shielded excavation equipment and/or reduced work shifts will be used to minimize radiation exposure. Excavation equipment will be decontaminated when remediation is complete. Dust suppression would include keeping open excavations and stockpiles to a minimum and using water sprayers to wet soil enough to prevent dust.

7.4.1.1.3 Transportation. Onsite transportation of excavated TSD unit soils to the treatment plant, clean stockpiles, or facilities for offsite loading will be by use of trucks or front-end loaders. Offsite shipment would be by truck or rail using suitable, covered, reusable bulk containers. The ERDF will be able to accept bulk containers. Transportation equipment would be dedicated and decontaminated at job completion. Worker exposures would be minimized as low as reasonably achievable (ALARA) by appropriate shielding and protective clothing.

7.4.1.1.4 Fixation. Fixation of soil wash fines or of a small portion of straight disposal waste may be required in order to meet the ERDF waste acceptance criteria (DOE-RL 1995b). This process entails crushing the soils to less than 19 mm (0.75 in.) and then mixing them with flyash, Portland cement, and water. Fixation will be as shown in Figure 7-2. Fixation will add approximately 20% to the volume of contaminated waste.

7.4.1.1.5 Surface Water Management. Little contaminated surface water is expected because of low precipitation and use of the best management practices in controlling

surface water. Surface water from dust abatement or soil washing will be controlled during site remediation to prevent the spread of contamination and minimize the amount of water contacting contaminated soil. All remediation alternatives for the TSD unit will include dikes and ditches to prevent run-on and run-off of surface water.

7.4.2 Soil Washing

If soil washing is the selected remedy, it is anticipated that, as a minimum, the north 91 m (300 ft) of the pre-ERA trenches area will be extensively remediated. The areas and depths of excavation will be based on the required cleanup levels (Section 4.3.3). The remaining trench areas, possibly including structure and piping removal areas, as guided by SAP-initiated field screening, will likely require remediation to a lesser degree because of reduced, post-ERA contamination levels. Sampling will be performed in accordance with the approved SAP to ensure the achievement of treatment process specifications.

The treatment of contaminated soils by soil washing generally will proceed as follows.

- The areal extent of TSD unit excavation activities would be guided by approved field screening to ensure the removal of contamination to below action levels and to minimize unnecessary excavation.

- The soils from the trenches, ERA impoundment areas, and structure and piping removal areas would be excavated and transported by truck to the soil-washing plant for treatment.

- The remediated fraction (cobbles, gravel, and sand) would remain segregated from contaminants and used as backfill material for the RCRA and CERCLA unit excavations and covered with 0.31 m (1 ft) of clean soil.

- Contaminated fines and washwater filtration residues derived from soil washing would be managed as CERCLA remediation waste while on the CERCLA site and disposed at the ERDF or as discussed in Section 7.4.3. Before disposal, contaminated fines or residues from soil washing will undergo fixation to meet ERDF waste acceptance criteria.

- Washwater will be recycled in the closed-loop treatment system and undergo filtration and treatment as needed before recycling. Makeup water will be added to compensate for loss through evaporation and absorption into the treated soil. Only when the remediation is complete would there be excess process water remaining in equipment requiring treatment and disposal. Washwater would likely be evaporatively treated with residues and disposed of as remediation waste.

- The site will be restored (i.e., graded, contoured, and paved or revegetated) as guided by future land-use considerations and as specified in the governing work documents.

7.4.3 Waste Management

Characterization efforts have indicated that dangerous waste constituents do not exist in TSD unit soils above MTCA Method C modified closure levels (DOE-RL 1993d). Remedial alternatives under consideration would generate TSD unit low-level radioactive or mixed waste. Low-level waste would require management and disposal under CERCLA authority. Mixed waste would require RCRA-compliant management of the dangerous waste component of the mixed waste.

The ERDF is scheduled under Tri-Party Agreement Milestone M-70-00 to be in operation to receive CERCLA remediation waste or RCRA corrective action waste by October 1996. The ERDF will be located in the 200 Areas of the Hanford Site, approximately 32.18 km (20 mi) northwest of the 300-FF-1 Operable Unit. The ERDF is a RCRA-compliant, double-lined trench with a modified RCRA-compliant cover and will have institutional controls including a leachate collection system and groundwater monitoring that will ensure that ERDF disposal provides equivalent protection of human health and the environment as disposal at a RCRA TSD unit. The ERDF disposal offers the advantages over 300-FF-1 Operable Unit onsite containment of distance from population centers, distance from the Columbia River, and greater groundwater protection. The 300 APT TSD unit waste is expected to be shown as nondangerous as discussed below and, therefore, could go to ERDF.

Currently, RCRA TSD unit closure waste is not within the definition of CERCLA remediation waste, and its disposal at the ERDF would not be allowed. This is because ERDF is not a RCRA-permitted unit, and waste that is still considered RCRA unit dangerous waste may not permanently (i.e., longer than 90 days) remain at a non-RCRA permitted site (e.g., the North Process Pond) unless such waste is specifically designated as "remediation waste" (CERCLA waste) and/or the waste is not RCRA dangerous waste (i.e., constituent concentrations are below designation and soils do not currently contain a "listed" waste). However, the 300-FF-1 Operable Unit ROD, in conjunction with RCRA regulators, will redesignate all TSD unit closure waste (i.e., soils, structure and piping demolition debris) as CERCLA remediation waste because it is being generated by the 300-FF-1 CERCLA remedial action. This will allow its disposal at ERDF or the North Process Pond.

TSD unit closure waste that is shown to be nondangerous would not have to be designated as remediation waste to allow its disposal at a CERCLA location. Although pre-ERA excavation soil sampling and TSD process knowledge have indicated a potential for pretreated TSD unit soils to be designated as listed and/or characteristic dangerous waste (WHC 1995), this potential may not be realized in TSD unit soils for the following reasons.

- The potential for dangerous waste designation because of the presence of listed waste constituents will be removed from unit soils due to their low concentrations. This will occur by obtaining the contained-in determination from regulators based on ERA soil sampling results as discussed in Section 4.3.1. TSD unit structure debris would also have to be included in the contained-in determination to qualify for CERCLA site disposal.

- Characteristic dangerous waste likely does not exist at this TSD unit. The few samples that identified a potential for some soils to be designated as characteristic dangerous waste also showed these levels to be only slightly above designation. Further, the sampling that identified this potential was performed before these soils were relocated to the spoils area during the regulator-approved ERA. During this relocation and subsequent mixture with less contaminated soils, soil concentrations likely no longer exist above designation levels.

Structures and piping inside the 300 APT boundary have not been previously sampled. If not redesignated as remediation waste, this demolition debris would require sampling for waste designation prior to disposal.

7.5 OTHER CLOSURE ACTIVITIES

Other TSD unit closure activities may be identified in future 300-FF-1 Operable Unit remedial action documents in support of TSD unit closure. As information regarding other TSD unit closure activities becomes available from the CERCLA document governing the activity, Ecology will be notified.

Equipment used during the remediation of the process trenches will be decontaminated in accordance with the appropriate CERCLA operable unit working documents.

7.6 CONTINGENCY CLOSURE PLAN

WAC 173-303-610(3) requires that closure plans for surface impoundments, such as the 300 APT TSD unit, contain a contingency plan in case the unit must close with dangerous waste remaining above action levels. This contingency is normally identified as landfill closure. However, characterization sampling has indicated that RCRA soil contamination is below MTCA Method C industrial levels that qualify the site for modified closure. Consequently, a contingency plan for closure of this unit as a landfill is not necessary. Postclosure care of this unit under the conditions of modified closure as the stated closure strategy (Chapter 6.0) will be addressed in Chapter 8.0.

7.7 PERSONNEL TRAINING

Appendix 7C contains a brief description of training courses. This training fulfills WAC 173-303-330 requirements for safety and site access training for work at a hazardous waste site containing both radioactive and dangerous waste hazards. All personnel entering the TSD unit during closure must have OSHA 40-hour hazardous waste training, as required by 29 CFR 1910.120.

7.7 SCHEDULE OF CLOSURE

Figure 7-3 reflects the overall schedule for activities within the 300-FF-1 Operable Unit, which includes the closure of the 300 APT. As an integrated activity, and in accordance with submittal schedules presented in Appendix D of the Tri-Party Agreement Action Plan, RCRA closure plan preparation has been coordinated with preparation of the CERCLA *Phase III Feasibility Study Report for the 300-FF-1 Operable Unit* (DOE-RL 1995b). These documents will remain on the same schedule for review, public comment, and finalization.

Closure of the 300 APT will begin, subsequent to the approval of the ROD and concurrent with remedial activity for the 300-FF-1 Operable Unit. However, remediation activities in support of closure can begin before closure plan approval with prior notification to Ecology.

Official copies of the closure plan will be located at the following office.

Office of Environmental Assurance,
Permits, and Policy
U.S. Department of Energy
Richland Operations Office
Federal Building
825 Jadwin Avenue
P.O. Box 550
Richland, Washington 99352

DOE-RL will be responsible for amending this closure plan, as deemed necessary, according to the amendment procedures in WAC 173-303-610. The closure plan will be kept by DOE-RL until closure is complete and certified.

7.8 AMENDMENT OF CLOSURE PLAN

The closure plan for the 300 APT will be amended whenever changes in operating plans or unit design affect the closure plan; whenever there is a change in the expected year of closure; or when conducting closure activities, unexpected events require a modification of the closure plan. The closure plan will be modified in accordance with WAC 173-303-610. This plan may be amended any time before certification of final closure of the 300 APT TSD unit.

If an amendment to the approved closure plan is required, DOE-RL will submit a written request to the lead regulatory agency to authorize a change to the approved plan. The written request will include a copy of the closure plan amendment for approval.

7.9 CERTIFICATION OF CLOSURE AND SURVEY PLAT

In accordance with WAC 173-303-610(6), within 60 days of closure of the 300 APT, DOE-RL will submit to the Benton County Auditor and the lead regulatory agency a certification of closure. The certification of closure will be signed by DOE-RL and a independent registered professional engineer, stating that the unit has been closed in accordance with the approved closure plan. The certification will be submitted by registered mail or an equivalent delivery service. Documentation supporting the independent registered professional engineer's certification will be supplied upon request of the regulatory authority. DOE-RL and the independent professional engineer will certify with a document similar to Figure 7-4.

The remedial action phase of the 300-FF-1 Operable Unit may include physical remediation of the 300 APT TSD unit. Upon completion of closure activities, an independent, registered professional engineer will certify closure of the TSD unit according to the closure plan. This certification will be provided to Ecology (see Section 8.8). Certification of final closure will be further required as discussed in Section 8.8.

Figure 7-1. Proposed Soil Washing Process Flow Diagram.

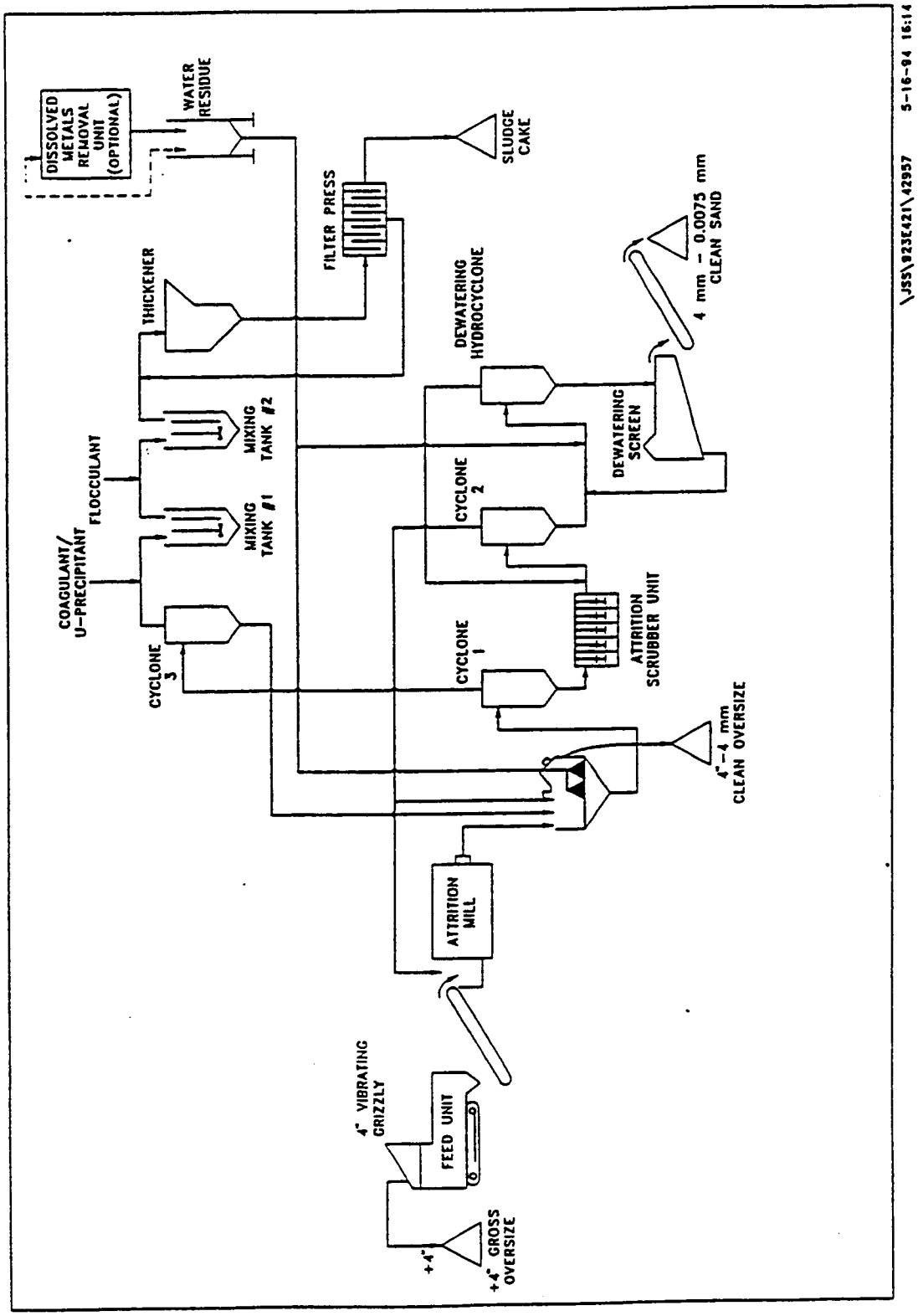

Figure 7-2. Process Flow Diagram for Ex Situ Fixation.

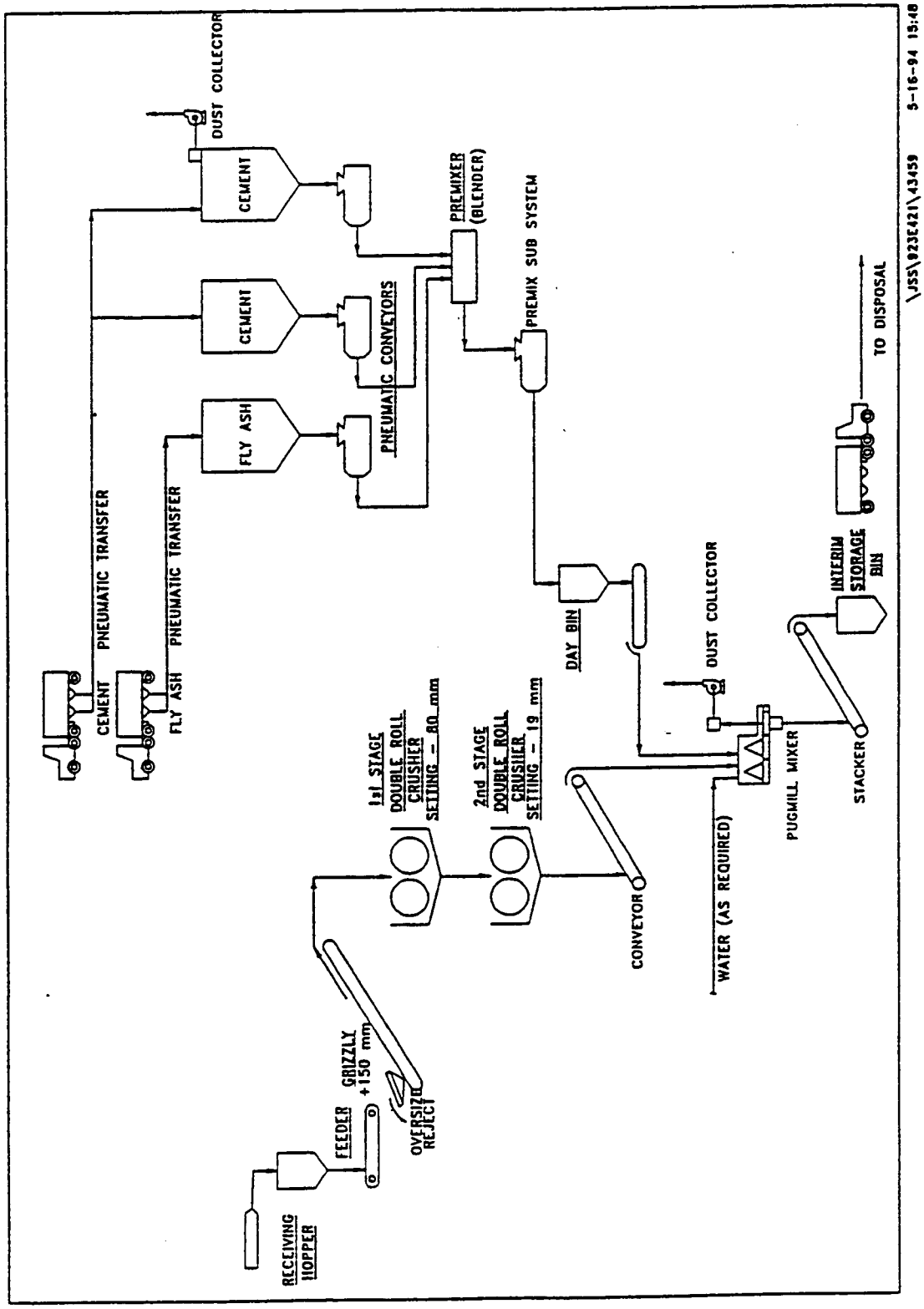

300 APT Closure Activity Schedule (integrated with remediation of the 300-FF-1 Operable Unit)

Activity ID	Activity Description	Orig Dur
20	ISSUE ROD AND PERMIT MODIFICATION	0
30	REMEDIAL DESIGN	327
35	REMEDIAL ACTION	174
40	CERTIFICATION OF CLOSURE	0
50	POSTCLOSURE CARE (START - 5 YEAR MINIMUM)	1

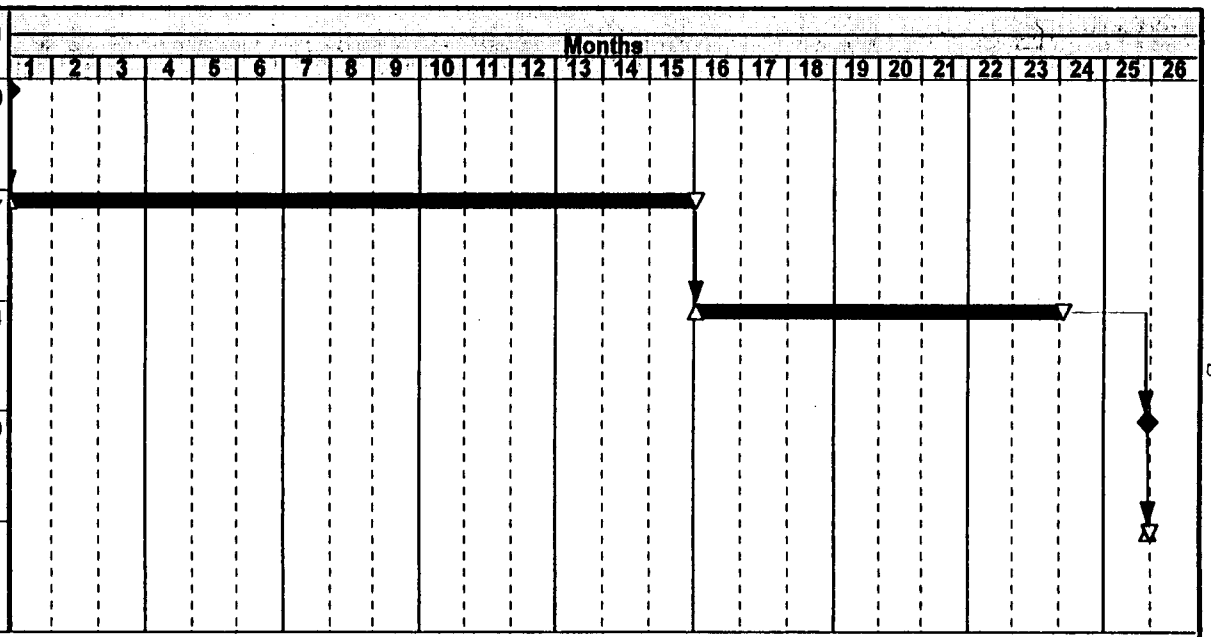

NOTE: Post-closure care (in accordance with Chapter 8 of this plan) will be initiated immediately after certification of closure. Such care will continue for a minimum of 5 years, and coordinated with the Record of Decision which will undergo review by the regulatory agencies. Post-closure care will continue in accordance with the requirements of conditions II.K.3a (institutional controls) and II.K.3.b (periodic assessments) of the Hanford Facility Dangerous Waste Permit.

Project Start	01JUL95	Early Bar	
Project Finish	30JUL97	Progress Bar	
Data Date	01JUL95	Critical Activity	
Plot Date	26JUL95		

© Primavera Systems, Inc.

Sheet 1A of 1C

300 APT CLOSURE
SUMMARY SCHEDULE

Figure 7-3. Schedule for Closure.

951120.1051

Figure 7-4. Typical Closure Certification Document.

CLOSURE CERTIFICATION
FOR

_____

Hanford Site
U.S. Department of Energy, Richland Operations Office

We, the undersigned, hereby certify that all _____ _____ closure activities were performed in accordance with the specifications in the approved closure plan.

_____ _____
Owner/Operator Signature DOE-RL Representative Date
(Typed Name)

_____ P.E.# _____ State ___ _____
Signature Independent Registered Professional Engineer Date
(Typed Name, Washington State Professional Engineer license number, and date of signature)

CONTENTS

8.0 POSTCLOSURE PLAN 8-1
8.1 MODIFIED CLOSURE CARE REQUIREMENTS 8-1
8.1.1 Institutional Controls 8-1
8.1.2 Periodic Assessments 8-2
8.2 INSPECTION PLAN 8-2
8.2.1 Inspection Logbook 8-3
8.2.2 Security Control Devices 8-3
8.2.3 Well Condition 8-3
8.2.4 Erosion Damage and General Integrity 8-4
8.3 CORRECTIVE ACTION PLAN 8-4
8.4 MAINTENANCE PLAN 8-5
8.4.1 Erosion Damage Repair 8-5
8.4.2 Well Replacement 8-5
8.5 PERSONNEL TRAINING 8-6
8.5.1 Outline of the Training Program 8-6
8.5.2 Job Description 8-6
8.5.3 Training Content, Frequency, and Techniques 8-7
8.5.4 Training Director 8-8
8.5.5 Training for Emergency Response 8-8
8.5.6 Implementation of Training Program 8-8
8.6 PROCEDURES TO PREVENT HAZARDS 8-9
8.6.1 Security 8-9
8.7 CLOSURE CONTACT 8-9
8.8 CERTIFICATION OF MODIFIED CLOSURE CARE COMPLETION AND FINAL CLOSURE 8-10

TABLES:

8-1. Inspection Schedule for the 300 Area Process Trenches T8-1

8.0 POSTCLOSURE PLAN

Closure of a TSD unit with contamination remaining above clean closure levels but below MTCA (WAC 173-340-745) industrial HBLs is identified in the Hanford Facility Permit (Ecology 1994a) as modified closure (Section 6.1.2.3). RCRA postremediation care of the unit will be required for modified closure status.

The inspections, maintenance, and monitoring requirements are reflected in this section, which is intended for use as the 300 APT postclosure permit application. The conditions of the postclosure permit application will be in conjunction with the O&M work plan of the 300-FF-1 Operable Unit remedial action. Unit care will meet the conditions for modified closure as presented in this chapter.

Condition II.K.3.c of the Hanford Facility RCRA Permit identifies the conditions of modified closure as postclosure care and requires a postclosure permit application. This chapter is intended to be used as a postclosure permit application.

8.1 MODIFIED CLOSURE CARE REQUIREMENTS

The conditions of modified closure status are intended to guide the unit through controlled and protective transition period(s) of naturally declining contamination levels. The period(s) will end in the termination of modified closure and the initiation of final closure. Until final closure, modified closure must meet the requirements of institutional controls and periodic assessments of WAC 173-340-440 and -410, respectively, as specified in the Hanford Facility Dangerous Waste Permit Conditions II.K.3.a and II.K.3.b and the Postclosure Permit Application.

8.1.1 Institutional Controls

The institutional controls are required under WAC 173-340-440 during a period of modified closure to ensure that control measures are maintained over time. These controls consist of physical measures and administrative and legal mechanisms. Physical barriers and signs provide physical control of activities that may interfere with further remedial action or that may cause exposure to contamination at the site. As a legal mechanism, a restrictive covenant will be placed in the deed describing the institutional controls. The covenant will also prohibit site activities that interfere with cleanup, cause exposure to site contamination, or release hazardous substances. The covenant will also require that Ecology be notified of conveyance of interest in the property, or any proposal to use the site inconsistently with the covenant, and that Ecology be granted reasonable access for inspection. This covenant will be removed from the deed upon the termination of modified closure status and after a period of public notice and comment.

8.1.2 Periodic Assessments

Periodic assessments shall include a compliance monitoring plan in accordance with MTCA, WAC 173-340-410. Compliance monitoring will primarily involve protection and confirmation monitoring. This monitoring will ensure the continued effectiveness of modified closure in controlling site contamination levels and protecting human health and the environment during the modified closure period. This monitoring is necessary to confirm compliance by demonstrating that contaminant levels found at time of closure have not increased.

As allowed by WAC 173-340-410, such monitoring may be combined with other plans or submittals. Confirmation monitoring for groundwater may be combined with the current joint RCRA/CERCLA program for the 300 Area. Protection monitoring is used to confirm that human health and the environment are adequately protected during this period and may be addressed in safety and health plans. The SAP will meet the requirements of WAC 173-340-820 and provide for data evaluation, including a description of any statistical methods used.

Compliance monitoring will include routine visual inspections, maintenance, and groundwater monitoring similar to that identified in the following sections. The compliance monitoring plan will also include a timetable for performance of these activities. The plan shall provide for at least one assessment activity that will be performed after 5 years to ensure that contamination has remained at previous concentrations or has diminished in concentration. The plan will identify the nature and date of the assessment activity as an anticipated year of final closure. The requirements for the assessment activity will be contained in the CERCLA O&M Plan and its support documents.

The assessment activity could be composed of visual inspections of the site for surface condition (soil cover) and usage (e.g., buildings, impervious surfaces), evaluation of existing data from the groundwater monitoring system, and/or other activities. If the contamination levels are shown to be the same or less than at the time of closure, the permittees may request that Ecology reduce or eliminate compliance activities, including institutional controls.

8.2 INSPECTION PLAN

This section describes compliance monitoring activities, security equipment, inspections for displacement, subsidence and erosion effects, and inspections for well conditions during a period of modified closure compliance monitoring. Table 8-1 lists the inspection items and the inspection frequency for the postclosure care period. These inspections may be implemented in checklist form. Such a checklist could specify entering checklist performance and results in the appropriate inspection logbook.

8.2.1 Inspection Logbook

Operations personnel will be conducting the inspections for site integrity, erosion, and security devices. Monitoring well conditions will be inspected by groundwater sampling personnel. The logbook will be issued and maintained for the entire period of closure monitoring by the site landlord in accordance with BHI-EE-01, *Environmental Investigations Procedures* (BHI 1995), or equivalent guidance.

Inspectors will be trained as identified in Section 8.5. The inspector will record any damage to the area and/or maintenance needs, as well as the weather conditions at the time of inspection. Separate logbook entries will be signed and dated. Performance of any related inspection checklists will be documented in the logbook. Maintenance actions will be started and should be completed within 90 days. Logbook entries will document the correction of the problem or the status of corrective actions. Entries should also uniquely identify, where possible, work documents that actually performed the activities.

8.2.2 Security Control Devices

The 300 APT is surrounded by a metal wire fence with a locked gate that is likely to remain in place during a period of modified TSD unit closure. If the locked gate is removed to accommodate remedial activities, it will be replaced with an appropriate physical barrier in accordance with postclosure core requirements.

Each of the groundwater monitoring wells has a locked cap to prevent unauthorized access and is surrounded by four steel guard posts for visibility to prevent damage from vehicles. The overall well condition, locks, guard posts, and pumps will be inspected during each sampling event. Problems and/or damage noted on the sampling log will be transferred to the field logbook for tracking of repairs.

8.2.3 Well Condition

Inspection of groundwater monitoring wells will be carried out under internal procedure BHI-EE-01 (BHI 1995) or equivalent guidance. This procedure calls for a surface inspection of a well at each sampling event. The procedure also calls for a subsurface inspection of the well at a minimum of every 3 to 5 years. This routine subsurface inspection may consist of pulling and inspecting the pump, brushing the inner walls of the casing and screen, and conducting a down-hole television survey.

8.2.4 Erosion Damage and General Integrity

The 300 APT will be inspected quarterly by physically walking over the site to visually check for wind and water erosion, subsidence, displacement, and general site integrity. Any site damage noted during inspections will be recorded in the field logbook and reported to the appropriate maintenance authority. Major site damage will be reported to Ecology within 30 days.

8.3 CORRECTIVE ACTION PLAN

In June of 1997, Ecology was notified that exceedances of concentration limits established under the Permit occurred within the 300 APT groundwater monitoring system. WAC 173-303-645(11) requires that a corrective action program be established to remediate contaminated soils and groundwater such that the groundwater protection standards of WAC 173-303-645(3) are reestablished. Actions to remediate these media were already underway at 300 APT prior to the determination of exceedances in the groundwater through EPA, Ecology, and DOE-RL approval of the ROD for the 300-FF-1 source Operable Unit and the 300-FF-5 groundwater Operable Unit (EPA 1996) and through Ecology approval of the 300 APT closure/postclosure plan in the Permit. The remedial actions taken in response to the ROD for these OUs will constitute the 300 APT corrective action program.

8.3.1 Soil Column Corrective Action

Selective excavation and disposal of the 300 APT unsaturated soil column contamination at the ERDF (as described in Section 7.2.3) will be implemented in accordance with the ROD for the 300-FF-1 Operable Unit (EPA 1996) and the Permit. Contaminated soil will be remediated to the cleanup levels specified in the ROD. Not all soil is being removed, some will remain after excavation although at levels below cleanup standards. The dangerous waste groundwater contaminants of concern at 300 APT that have prompted corrective action under WAC 173-303-645(11) are not dangerous waste soil contaminants of concern. DCE and TCE concentrations found during the 1991 ERA sampling efforts were well below MTCA C cleanup criteria.

After removal of contaminated soil at the 300 APT, actions will include addition of clean backfill, and site grading and revegetation to minimize infiltration of moisture. These actions are designed to ensure continued protection of groundwater by eliminating the migration of soil contamination.

8.3.2 Groundwater Corrective Action

Corrective action to address groundwater contamination in the 300 Area, including contamination that has resulted from 300 APT, has been initiated as part of the CERCLA remediation activities. The ROD for the 300-FF-5 (EPA 1996) Operable Unit includes remediation of contaminated groundwater, saturated soils, river sediments, and river water in the immediate vicinity of the 300 Area. The alternative selected in the ROD for remediation of

groundwater is institutional controls (e.g., groundwater use restrictions). Implementation of this alternative will require continued groundwater monitoring of contaminant trends under the corrective action groundwater monitoring plan (Lindberg et. al.1995) and near-surface river water sampling. These actions, as committed to under the 300-FF-5 ROD (EPA 1996), constitute the corrective action measures to be taken under WAC 173-303-645(11). Also, five years after the ROD was signed, contaminant trends in the groundwater will be reported to EPA and Ecology.

8.4 MAINTENANCE PLAN

This section provides a plan for maintenance of the unit during the compliance monitoring period required for modified closure. Elements of this maintenance plan include repair of security devices, erosion damage, correction of subsidence or displacement, and well replacement. The maintenance plan is based on observations made and recorded in the inspection logbook (Section 8.2.1) during site inspections. Except where immediate action is required, maintenance action will be initiated within 90 days of inspection and discovery.

repairs will be made as soon as possible after notification of damage. Repairs to the four steel guard posts at each monitoring well will be made before the following inspection period and tracked in the logbook to completion.

8.4.1 Erosion Damage Repair

Any erosion damage noted during the inspections will be properly noted in the inspection logbook and reported to the responsible maintenance organization. Major erosion damage repairs will be initiated immediately using grading equipment, fill soils, and revegetation, as appropriate. Minor damage can be repaired using hand tools and should be initiated within 90 days of notification. Timely repairs will minimize the extent of erosion and should return the site surfaces to predamaged conditions as much as practicable.

8.4.2 Well Replacement

Maintenance of groundwater monitoring wells will be carried out under internal procedure BHI-EE-01 (BHI 1995) or equivalent guidance. This procedure covers correction of problems found during routine inspection or that manifest themselves at other times. If field maintenance procedures are inadequate to solve problems identified during site inspection, management will decide whether to repair or replace the well.

Where monitoring well damage requires modification of the groundwater monitoring program, the monitoring plan will be amended in accordance with WAC 173-303-610 (8)(d).

8.5 PERSONNEL TRAINING

This section describes the training of personnel required to maintain the 300 APT in a safe and secure manner during postclosure care as required by 40 CFR 265.16, WAC 173-303-330, and Condition II.C.2 of the Hanford Facility Dangerous Waste Permit. A training outline is also provided in Appendix 7C of this closure plan.

8.5.1 Outline of the Training Program

This section outlines the introductory and continuing training programs necessary to conduct the postclosure activities at the 300 APT in a safe manner. This section also includes a brief description of how training will be designed to meet job tasks as required in 40 CFR 265.16(a).

Surveillance Personnel: The following outline provides information on classroom and on-the-job training that surveillance personnel will complete before conducting independent site surveillance at the 300 APT:

- Site surface inspections (water and wind erosion, settlement and displacement, vegetative cover)
- Security inspections
- Location, integrity, and inspection of benchmarks
- Location, integrity, and inspection of groundwater wells.

8.5.2 Job Description

This section provides the job description(s) for postclosure activities at 300 APT as required by 40 CFR 265.16(d)(1) and WAC 173-303-330(2)(a).

Site Surveillance: Personnel with training in the following areas will conduct the inspections:

- Control devices
- Damage
- Settlement and displacement
- Vegetative cover condition
- Benchmark integrity.

8.5.3 Training Content, Frequency, and Techniques

The training of personnel requires the following job-specific training areas, as appropriate.

- **Emergency Preparedness Training**: This training will include a review of emergency procedures that consists of listening to standard emergency signals, emergency exit routing, job-specific emergency actions, and reporting procedures.

- **The RCRA Groundwater Monitoring Scope, Organization, and Quality Assurance Plan**: This training will include the documentation requirements included in the chain of custody to the laboratory, how to correct mistakes made on field data sheets, and any applicable manifests or shipping orders required for shipping samples to the laboratory.

- **Groundwater Field Sampling Procedures**: This training will include pump description and operation of the three types of pumps (used by the field personnel), operational procedures for the generators and the pumps used to gather groundwater samples, and special requirements for collecting and packaging samples containing volatile organic materials that require acid preservatives or special filtering. Training also will be given in the areas of field data record preparation and chain of custody to the laboratory.

- **Site Cover Inspections**: This on-the-job training program is established to ensure that the surveillance personnel know what to inspect after closure of the 300 APT. The program will include how to inspect for obvious signs of erosion, proper drainage, settlement, and sedimentation. In addition, personnel will be informed about what constitutes proper vegetation coverage.

- **Site Security Inspections**: Personnel will be instructed on how to inspect for obvious signs of a security breach. Signs may include cut fencing, unlocked gates, cut chains, or downed barricades.

- **Location, Integrity, and Inspection of Benchmarks**: Personnel will be shown the location of benchmarks and instructed on how to report any obvious signs of destruction or deterioration.

- **Location, Integrity, and Inspection of Groundwater Wells**: Personnel will be shown the locations of the groundwater wells and instructed on how to inspect the cap and casing of each well to ensure that it is locked.

8.5.4 Training Director

The training director for the site surveillance personnel holds the title Manager of Safety Training. This position requires a Bachelor of Science degree in science or engineering with extensive experience in RCRA closure activities and mixed waste or related areas and 5 years of management experience.

The objectives of this position include providing certification, recertification, and continuing training for all health physics technicians and providing general safety training for all personnel and other selected Hanford Site contractors, the DOE-RL, and visiting personnel working in Hanford Site facilities.

8.5.5 Training for Emergency Response

This section will demonstrate that personnel conducting postclosure activities at the 300 APT have been fully trained to respond effectively to emergencies and are familiar with emergency procedures and equipment. In addition, 40 hours of hazardous waste site operation training will be provided in accordance with 29 CFR 1910.120.

- **Procedures Regarding Emergency and Monitoring Equipment**: The procedures for using, inspecting, repairing, and replacing emergency and monitoring equipment are covered as part of personnel training. The site surveillance personnel will undergo training in these areas.

- **Response to Fires**: The 300 APT will have no existing structures and may be covered with a soil cover. As such, there is no need for fire equipment. However, if personnel are at the unit when a brushfire breaks out, they will notify the Hanford Fire Department and the 200 East Area emergency control director by radio.

- **Response to Groundwater Contamination**: Based on the current groundwater monitoring program, groundwater contamination beneath the 300 APT does not constitute an emergency situation, nor will it become so as a result of closure. Therefore, emergency response training in this regard is not warranted at this time.

8.5.6 Implementation of Training Program

Surveillance personnel will undergo the required training programs outlined in Section 8.4.1 as they pertain to monitoring requirements. Surveillance personnel will not be allowed to perform inspections at the 300 APT until the required training programs have been completed.

8.6 PROCEDURES TO PREVENT HAZARDS

As required under 40 CFR 265.14 and WAC 173-303-310, the closure plan will describe procedures to prevent hazards from occurring at the closed unit. This section describes procedures to be used for ensuring proper security at the site including surveillance measures, intrusion barrier requirements, warning signs, and waiver declarations.

8.6.1 Security

Security will be maintained through routine surveillance, physical barriers, and warning signs that will remain in effect during the period of postclosure care required for modified closure.

8.6.1.1 24-Hour Surveillance System. The 300 APT unit is located within the 300 Area of the Hanford Site. The 300 Area will remain an industrial, operational area of the Hanford Site for the foreseeable future. Operational areas will be under 24-hour surveillance by Hanford Patrol protective force personnel.

8.6.1.2 Barrier, Means to Control Entry, and Warning Signs. As an operational area of the Hanford Site, roadways to the unit and site access will remain administratively restricted to use by authorized personnel only. The unit is currently surrounded by a metal wire fence that is posted with warning signs reading "Danger - unauthorized personnel keep out." This fence may remain in place during the modified closure care period. Access to the 300 Area from the Columbia River is restricted by posted federal warning signs. Further institutional and administrative measures controlling TSD unit site access may be initiated for the site commensurate with the future use of the property as an industrial area.

8.7 CLOSURE CONTACT

The following office will be the official contact for the 300 APT during the postclosure care period:

Office of Environmental Assurance,
Permits, and Policy
U.S. Department of Energy
Richland Operations Office
P.O. Box 550
Richland, Washington 99352
(509) 376-5411

8.8 CERTIFICATION OF MODIFIED CLOSURE CARE COMPLETION AND FINAL CLOSURE

The sole source of regulatory direction for modified closure is Section II, K of the Hanford Facility Dangerous Waste Permit. The permit describes this period as a postclosure period. Completion of the postclosure period will end the period of modified closure and will allow final closure with regulator concurrence.

No later than 60 days after completion of the modified postclosure care period, the DOE-RL will submit to Ecology a certification of completion of postclosure care. This certification, stating that postclosure care for the unit was performed in accordance with the approved closure plan, will be signed by both the DOE-RL and an independent registered professional engineer. .The certification will be submitted by registered mail or an equivalent delivery service. Documentation supporting the independent registered professional engineer's certification will be supplied upon request of the regulatory authority. The DOE-RL and the independent professional engineer will certify with a document similar to Figure 7-3.

Table 8-1. Inspection Schedule for the 300 Area Process Trenches.

Inspection item	Inspection frequency
Security control devices: fences, well caps, and locks	Quarterly
Erosion damage	Quarterly
Well condition	Semiannually
General integrity	Quarterly
Subsurface well condition	3 to 5 years

CONTENTS

9.0 REFERENCES 9-1
9.1 DOCUMENTS 9-1
9.2 CODE OF FEDERAL REGULATIONS AND FEDERAL REGISTER 9-5
9.3 FEDERAL AND STATE ACTS 9-5
9.4 WASHINGTON ADMINISTRATIVE CODE 9-5
9.5 THE U.S. DEPARTMENT OF ENERGY ORDERS 9-6

9.0 REFERENCES

9.1 DOCUMENTS

BHI, 1995, *Environmental Investigations Procedures*, BHI-EE-001, 2 vols., Bechtel Hanford, Inc., Richland, Washington.

DOE-RL, 1988, *Hanford Facility Dangerous Waste Part A Permit Application*, 3 vols., DOE/RL 88-21, U.S. Department of Energy, Richland Operations Office, Richland, Washington.

DOE-RL, 1992a, *Expedited Response Action Assessment for the 316-5 Process Trenches*, DOE/RL-92-32, Rev. 0, U.S. Department of Energy, Richland Operations Office, Richland, Washington.

DOE-RL, 1992b, *Expedited Response Action Proposal for the 316-5 Process Trenches*, DOE/RL-91-11, U.S. Department of Energy, Richland Operations Office, Richland, Washington.

DOE-RL, 1992c, *Remedial Investigation/Feasibility Study Work Plan for the 300-FF-1 Operable Unit, Hanford Site, Richland, Washington*, DOE/RL-88-31, Rev. 3, U.S. Department of Energy, Richland Operations Office, Richland, Washington.

DOE-RL, 1993a, *Annual Report for RCRA Groundwater Monitoring Projects at Hanford Site Facilities for 1992*, DOE/RL-93-09, Rev. 0, U.S. Department of Energy, Richland Operations Office, Richland, Washington.

DOE-RL, 1993b, *Hanford Site Baseline Risk Assessment Methodology*, DOE/RL-91-45, Rev. 2, U.S. Department of Energy, Richland Operations Office, Richland, Washington.

DOE-RL, 1993c, *Phase I and II Feasibility Study Report for the 300-FF-1 Operable Unit*, DOE/RL-92-46, Rev. 0, U.S. Department of Energy, Richland Operations Office, Richland, Washington.

DOE-RL, 1993d, *Phase I Remedial Investigation Report for the 300-FF-1 Operable Unit*, DOE/RL-92-43, Rev. 0, U.S. Department of Energy, Richland Operations Office, Richland, Washington.

DOE-RL, 1993e, *Phase I Remedial Investigation Report for the 300-FF-5 Operable Unit*, DOE/RL-93-21, Rev. 0, U.S. Department of Energy, Richland Operations Office, Richland, Washington.

DOE-RL, 1994a, *Annual Report for RCRA Groundwater Monitoring Projects at Hanford Site Facilities for 1993*, DOE/RL-93-88, U.S. Department of Energy, Richland Operations Office, Richland, Washington.

DOE-RL, 1994b, *Hanford Site Background: Part 1, Soil Background for Nonradioactive Analytes*, DOE/RL-92-24, Rev. 2, U.S. Department of Energy, Richland Operations Office, Richland, Washington.

DOE-RL, 1994c, *Phase II Remedial Investigation Report for the 300-FF-1 Operable Unit; Physical Separation of Soils Treatability Study*, DOE/RL-93-96, Rev. 0, U.S. Department of Energy, Richland Operations Office, Richland, Washington.

DOE-RL, 1995a, *Phase I Remedial Investigation/Feasibility Study for the 300-FF-5 Operable Unit*, DOE/RL-94-85, Rev. 0, U.S. Department of Energy, Richland Operations Office, Richland, Washington.

DOE-RL, 1995b, *Phase III Feasibility Study Report for the 300-FF-1 Operable Unit*, DOE/RL-94-49, Rev. 0, U.S. Department of Energy, Richland Operations Office, Richland, Washington.

DOE-RL, 1995c, *Proposed Plan for the 300-FF-1 and 300-FF-5 Operable Units*, DOE/RL-95-88, U.S. Department of Energy, Richland Operations Office, Richland, Washington.

DOE-RL, 1996, *General Information Portion of the Hanford Facility RCRA Permit*, DOE/RL-91-28, U.S. Department of Energy, Richland Operations Office, Richland, Washington

Drummond, M. E., 1992, *Future for Hanford: Uses and Cleanup - A Final Report of the Hanford Future Site Uses Working Group*, Hanford Future Site Uses Working Group, Richland, Washington.

Eaton, T., 1993, *Contained-in policy*, [Letter to all Ecology Hazardous Waste Staff], Washington State Department of Ecology, Olympia, Washington.

Ecology, EPA, and DOE, 1994, *Hanford Federal Facility Agreement and Consent Order*, 2 Vols., as amended, Washington State Department of Ecology, U.S. Environmental Protection Agency, and U.S. Department of Energy, Olympia, Washington.

Ecology, 1994a, *Dangerous Waste Portion of the Resource Conservation and Recovery Act Permit for the Treatment, Storage, and Disposal of Dangerous Waste*, August 1994, Washington State Department of Ecology.

Ecology, 1994b, *Guidance for Clean Closure of Dangerous Waste Facilities*, Publication 94-111, August 1994, Washington State Department of Ecology, Olympia, Washington.

EPA, 1983, *Interim Guidelines and Specifications for Preparing Quality Assurance Project Plans*, QAMS-005/80, U.S. Environmental Protection Agency/Office of Exploratory Research, Washington, D.C.

EPA, 1986, *RCRA Ground Water Monitoring Technical Enforcement Guidance Document (TEGD)*, OSWER-9950.1, U.S. Environmental Protection Agency, Washington, D.C.

EPA, 1988, *Guidance for Conducting Remedial Investigations and Feasibility Studies Under CERCLA, Interim Final*, EPA/540/G-89/004, OSWER Directive 9355.3-01, U.S. Environmental Protection Agency, Washington, D.C.

EPA, 1991, *Integrated Risk Information System (IRIS)*, U.S. Environmental Protection Agency, Washington, D.C.

EPA, 1993, *Test Methods for Evaluating Solid Waste: Physical/Chemical Methods*, SW-846, as amended, (Supplement 1990), U.S. Environmental Protection Agency, Washington, D.C.

EPA, 1996, *Declaration of the Record of Decision for the 300-FF-1 and 300-FF-5 Operable Units*, U.S. Environmental Protection Agency, Washington, D.C.

HEDL, 1984, *Environmental Protection Manual*, HEDL-MG-99, Hanford Engineering Development Laboratory, Richland, Washington.

Lindberg, J. W., C. J. Chou, and V. G. Johnson, 1995, "Groundwater Monitoring Plan for the 300 Area Process Trenches," WHC-SD-EN-AP-185, Westinghouse Hanford Company, Richland, Washington.

PNL, 1987, *Ground-Water Monitoring Compliance Projects for Hanford Site Facilities: Progress Report for the Period January 1 to March 31, 1987*, 3 Vols., PNL-6476, Pacific Northwest Laboratory, Richland, Washington.

PNL, 1989, *Procedures for Ground-Water Investigations*, PNL-6894, Pacific Northwest Laboratory, Richland, Washington.

Rockwell, 1984, *Annual Dangerous Waste Report for Calendar Year 1984*, Rockwell International for the U.S. Department of Energy, Richland Operations Office, Richland, Washington.

Schalla, R., R. L. Aaberg, D. J. Bates, J. V. M. Carlile, M. D. Freshley, T. L. Liikala, P. J. Mitchell, K. B. Olsen, and J. T. Rieger, 1988a, *Revised Ground-Water Monitoring Compliance Plan for the 300 Area Process Trenches*, PNL-6671, Pacific Northwest Laboratory, Richland, Washington.

Schalla, R., R. L. Aaberg, S. P. Airhart, D. J. Bates, J. V. M. Carlile, C. S. Cline, D. I. Dennison, M. D. Freshley, P. R. Heller, E. J. Jensen, K. B. Olsen, R. G. Parkhurst, J. T. Rieger, R. W. Wallace, and E. J. Westergard, 1988b, *Interim Characterization Report for the 300 Area Process Trenches*, PNL-6716, Pacific Northwest Laboratory, Richland, Washington.

Stordeur, R. T., 1992, *Hanford 300 Area Process Wastewater Characterization Data Report*, WHC-SD-LO45H-DP-001, Westinghouse Hanford Company, Richland, Washington.

Swanson, L. C., G. G. Kelty, K. A. Lindsey, K. R. Simpson, R. K. Price, and S. D. Consort, 1992, *Phase I Hydrogeologic Summary of the 300-FF-1 Operable Unit, 300 Area*, WHC-SD-EN-TI-052, Westinghouse Hanford Company, Richland, Washington.

WHC, 1988, *300 Area Process Trenches - Interim Status Closure/Post-Closure Plan*, Rev. 1, First Draft, Internal RCRA Closures Report. Westinghouse Hanford Company, Richland, Washington.

WHC, 1989, *Environmental Compliance*, WHC-CM-7-5, Westinghouse Hanford Company, Richland, Washington.

WHC, 1992a, *Past Practice Technical Characterization Study - 300 Area Hanford Site*, WHC-MR-0388, Westinghouse Hanford Company, Richland, Washington.

WHC, 1992b, *Quality Assurance Project Plan for RCRA Groundwater Monitoring Activities*, WHC-SD-EN-QAPP-001, Rev. 1, Westinghouse Hanford Company, Richland, Washington.

WHC, 1993, *300 Area Process Sewer Sampling Analysis Plan*, WHC-SD-L-045H-PLN-001, Rev. 0, Westinghouse Hanford Company, Richland, Washington.

WHC, 1995, *Groundwater Monitoring Plan for the 300 Area Process Trenches*, WHC-SD-EN-AP-185, Rev. 0, Westinghouse Hanford Company, Richland, Washington.

Young, J. S, 1990, *Data Compilation Task Report for the Source Investigation of the 300-FF-1 Operable Unit Phase I Remedial Investigation*, PNL-7241, Pacific Northwest Laboratory, Richland, Washington.

Young, J. S. and J. S. Fruchter, 1991, EMO-1026, *Addendum to Data Compilation Task Report for the Source Investigation of the 300-FF-1 Operable Unit Phase I Remedial Investigation*, Pacific Northwest Laboratory, Richland, Washington.

9.2 CODE OF FEDERAL REGULATIONS AND FEDERAL REGISTER

29 CFR 1910.120, "Hazardous Waste Operations and Emergency Response", Title 29, *Code of Federal Regulations*, as amended.

40 CFR 141, "National Primary Drinking Water Regulations," Title 40, *Code of Federal Regulations*, Part 141, as amended.

40 CFR 261, "Identification and Listing of Hazardous Waste," Title 40, *Code of Federal Regulations*, Part 261, as amended.

40 CFR 265, "Protection of Environment," Title 40, *Code of Federal Regulations*, Part 265, as amended, U.S. Environmental Protection Agency, Washington, D.C.

40 CFR 270, "EPA Administered Permit Programs: The Hazardous Waste Permit Program," Title 40, *Code of Federal Regulations*, Part 270, as amended.

51 CFR 7722, 1986, "Hazardous Waste Management System, Supplement to Preamble and Final Codification Rule," *Federal Register*, Vol. 51, p. 7722, (March 5).

9.3 FEDERAL AND STATE ACTS

Comprehensive Environmental Response, Compensation, and Liability Act of 1980, 42 U.S.C. 9601 et seq.

Resource Conservation and Recovery Act of 1976, 42 U.S.C. 6901 et seq.

9.4 WASHINGTON ADMINISTRATIVE CODE

WAC 173-160, "Minimum Standards for Construction and Maintenance of Wells," *Washington Administrative Code*, as amended.

WAC 173-200, "Water Quality Standards of the State of Washington," *Washington Administrative Code*, as amended.

WAC 173-201, "Water Quality Standards for Surface Waters of the State of Washington," *Washington Administrative Code*, as amended.

WAC 173-216, "State Waste Discharge Permit Program," *Washington Administrative Code*, as amended.

WAC 173-303, 1990, "Dangerous Waste Regulations," *Washington Administrative Code*, as amended.

WAC 173-340, 1990, "The Model Toxics Control Act Cleanup Regulation," *Washington Administrative Code*, as amended.

9.5 THE U.S. DEPARTMENT OF ENERGY ORDERS

DOE Order 5820.2A, *Radioactive Waste Management*.

APPENDICES

2A PHOTOGRAPHS . . . . . APP 2A-I

5A GROUNDWATER REFERENCES . . . . . APP 5A-I

7A SAMPLING AND ANALYSIS PLAN [REMOVED]

7B ANALYTICAL DATA AND VALIDATION PACKAGE FOR THE 300 AREA PROCESS TRENCHES [RESERVED] . . . . . APP 7B-I

7C TRAINING COURSE DESCRIPTIONS . . . . . APP 7C-I

7D SUMMARY OF PRE- AND POST-EXPEDITED RESPONSE ACTION ANALYTICAL DATA . . . . . APP 7D-I

APPENDIX 2A

PHOTOGRAPHS

Figure 2A-1. 300 Area Process Trenches Pre-Expedited Response Action (Facing South).

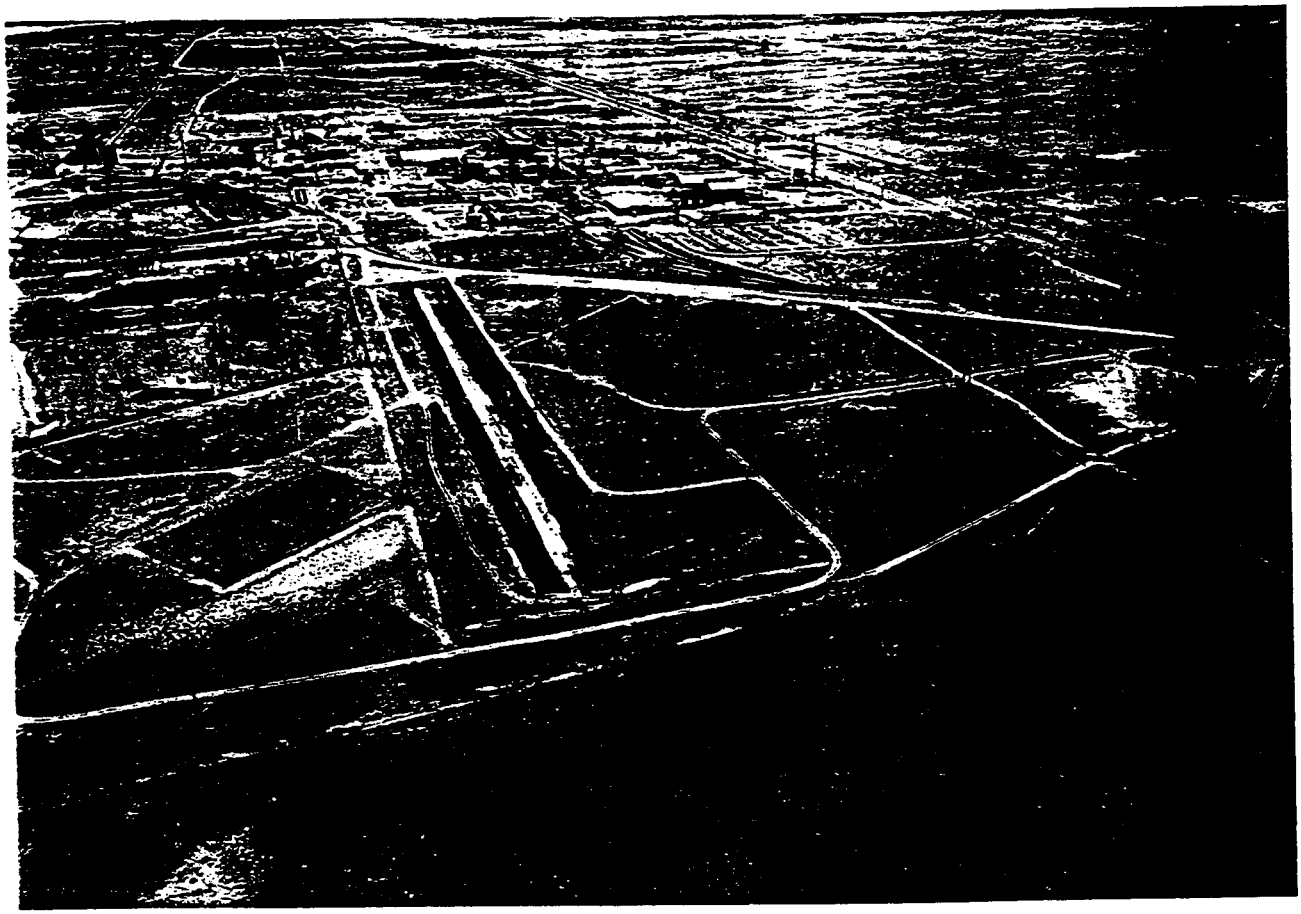

8703018-54CN
(PHOTO TAKEN 1987)

Figure 2A-2. 300 Area Process Trenches Post-Expedited Response Action (Facing South).

93050254-48CN
PHOTO TAKEN 1993)

APPENDIX 5A

GROUNDWATER REFERENCES

APPENDIX 5A

GROUNDWATER REFERENCES

PERIOD 1988

PNL, 1988, *Ground-Water Monitoring Compliance Projects for Hanford Site Facilities: Progress Report for the Period January 1 to March 31, 1988*, PNL-6581, Pacific Northwest Laboratory, Richland, Washington.

PNL, 1988, *Ground-Water Monitoring Compliance Projects for Hanford Site Facilities: Progress Report for the Period April 1 to June 30, 1988*, PNL-6675, Pacific Northwest Laboratory, Richland, Washington.

Fruland, R. M., D. J. Bates, and R. E. Lundgren, 1989, *Resource Conservation and Recovery Act Ground-Water Monitoring Projects for Hanford Facilities: Progress Report for the Period July 1 to September 30, 1988*, PNL-6789, Pacific Northwest Laboratory, Richland, Washington.

Fruland, R. M., D. J. Bates, and R. E. Lundgren, 1989, *Resource Conservation and Recovery Act Ground-Water Monitoring Projects for Hanford Facilities: Progress Report for the Period October 1 to December 31, 1988*, PNL-6844, Pacific Northwest Laboratory, Richland, Washington.

Fruland, R. M. and R. E. Lundgren, eds., 1989, *RCRA Ground-Water Monitoring Projects for Hanford Facilities: Annual Progress Report for 1988*, PNL-6852, Pacific Northwest Laboratory, Richland, Washington.

PERIOD 1989

Smith, R. M., D. J. Bates, and R. E. Lundgren, 1989, *Resource Conservation and Recovery Act Ground-Water Monitoring Projects for Hanford Facilities: Progress Report for the Period January 1 to March 31, 1989*, PNL-6957, Pacific Northwest Laboratory, Richland, Washington.

Smith, R. M., D. J. Bates, and R. E. Lundgren, 1989, *Resource Conservation and Recovery Act Ground-Water Monitoring Projects for Hanford Facilities: Progress Report for the Period April 1 to June 30, 1989*, PNL-7134, Pacific Northwest Laboratory, Richland, Washington.

Smith, R. M., D. J. Bates, and R. E. Lundgren, 1989, *Resource Conservation and Recovery Act Ground-Water Monitoring Projects for Hanford Facilities: Progress Report for the Period July 1 to September 30, 1989*, PNL-7222, Pacific Northwest Laboratory, Richland, Washington.

Smith, R. M., D. J. Bates, and R. E. Lundgren, 1990, *Resource Conservation and Recovery Act Ground-Water Monitoring Projects for Hanford Facilities: Progress Report for the Period October 1 to December 31, 1989*, PNL-7306, Pacific Northwest Laboratory, Richland, Washington.

Smith, R. M. and W. R. Gorst, eds., 1990, *RCRA Ground-Water Monitoring Projects for Hanford Facilities: Annual Progress Report for 1989*, PNL-6852, Pacific Northwest Laboratory, Richland, Washington.

PERIOD 1990

WHC, 1990, *Quarterly Report of Resource Conservation and Recovery Act Groundwater Monitoring Data for Period January 1, 1990 Through March 31, 1990*, letter from R. E. Lerch to R. D. Izatt, dated May 25, 1990, #9053781, Westinghouse Hanford Company, Richland, Washington.

DOE-RL, 1990, *Quarterly Report of RCRA Groundwater Monitoring Data for Period April 1, 1990 through June 30, 1990*, DOE/RL-90-36, U.S. Department of Energy, Richland Operations Office, Richland, Washington.

DOE-RL, 1990, *Quarterly Report of RCRA Groundwater Monitoring Data for Period July 1, 1990 through September 30, 1990*, DOE/RL-90-46, U.S. Department of Energy, Richland Operations Office, Richland, Washington.

DOE-RL, 1991, *Quarterly Report of RCRA Groundwater Monitoring Data for Period October 1, 1990 through December 31, 1990*, DOE/RL-91-04, U.S. Department of Energy, Richland Operations Office, Richland, Washington.

DOE-RL, 1991, *Annual Report for RCRA Groundwater Monitoring Projects at Hanford Site Facilities for 1990*, DOE/RL-91-03, U.S. Department of Energy, Richland Operations Office, Richland, Washington.

PERIOD 1991

DOE-RL, 1991, *Quarterly Report of RCRA Groundwater Monitoring Data for Period January 1, 1991 through March 31, 1991*, DOE/RL-91-26. U.S. Department of Energy, Richland Operations Office, Richland, Washington.

DOE-RL, 1991, *Quarterly Report of RCRA Groundwater Monitoring Data for Period April 1, 1991 through June 30, 1991*, DOE/RL-91-47, U.S. Department of Energy, Richland Operations Office, Richland, Washington.

DOE-RL, 1991, *Quarterly Report of RCRA Groundwater Monitoring Data for Period July 1, 1991 through September 30, 1991*, DOE/RL-91-57, U.S. Department of Energy, Richland Operations Office, Richland, Washington.

DOE-RL, 1992, *Quarterly Report of RCRA Groundwater Monitoring Data for Period October 1, 1991 through December 31, 1991*, DOE/RL-92-26, U.S. Department of Energy, Richland Operations Office, Richland, Washington.

DOE-RL, 1992, *Annual Report for RCRA Groundwater Monitoring Projects at Hanford Site Facilities for 1991*, DOE/RL-92-03, U.S. Department of Energy, Richland Operations Office, Richland, Washington.

PERIOD 1992

DOE-RL, 1992, *Quarterly Report of RCRA Groundwater Monitoring Data for Period January 1, 1992 through March 31, 1992*, DOE/RL-92-26-1, U.S. Department of Energy, Richland Operations Office, Richland, Washington.

DOE-RL, 1992, *Quarterly Report of RCRA Groundwater Monitoring Data for Period April 1, 1992 through June 30, 1992*, DOE/RL-92-26-2, U.S. Department of Energy, Richland Operations Office, Richland, Washington.

DOE-RL, 1992, *Quarterly Report of RCRA Groundwater Monitoring Data for Period July 1, 1992 through September 30, 1992*, DOE/RL-92-26-3, U.S. Department of Energy, Richland Operations Office, Richland, Washington.

DOE-RL, 1993, *Quarterly Report of RCRA Groundwater Monitoring Data for Period October 1, 1992 through December 31, 1992*, DOE/RL-92-26-4, U.S. Department of Energy, Richland Operations Office, Richland, Washington.

DOE-RL, 1993, *Annual Report for RCRA Groundwater Monitoring Projects at Hanford Site Facilities for 1992*, DOE/RL-93-09, U.S. Department of Energy, Richland Operations Office, Richland, Washington.

PERIOD 1993

DOE-RL, 1993, *Quarterly Report of RCRA Groundwater Monitoring Data for Period January 1, 1993 through March 31, 1993*, DOE/RL-93-56-1, U.S. Department of Energy, Richland Operations Office, Richland, Washington.

DOE-RL, 1993, *Annual Report for RCRA Groundwater Monitoring Projects at Hanford Site Facilities for 1993*, DOE/RL-93-88, U.S. Department of Energy, Richland Operations Office, Richland, Washington.

APPENDIX 7B

SAMPLING DATA AND EVALUATION PACKAGE FOR THE 300 AREA PROCESS TRENCHES

[RESERVED]

APPENDIX 7C

TRAINING COURSE DESCRIPTIONS

This appendix contains a training matrix and brief course descriptions.

Table 7C-1. Environmental and Hazardous Material Safety Training. (2 Sheets)

	Course name	Description
1.	Hazard Communication and Waste Orientation	Course provides an overview of the federal and applicable hazard communication programs and hazardous and/or dangerous waste disposal programs.
2.	Generator Hazards Safety Training	Course provides the hazardous and/or dangerous material/waste worker with the fundamentals for use and disposal of hazardous and/or dangerous materials.
3.	Hazardous Materials/Waste Job-Specific Training	Course provides specific information on hazardous and/or dangerous chemicals and waste management at the employees' treatment, storage, and/or disposal (TSD) unit.
4.	Initial Radiation Worker Training	Course provides radiation workers with the fundamentals of radiation protection and the proper procedures for maintaining exposures as low as reasonably achievable.
5.	Waste Site Basics	Course provides required information for the safe operation of hazardous and/or dangerous waste TSD units regulated under Title 40, *Code of Federal Regulations*, Parts 264 and 265 pursuant to *Resource Conservation and Recovery Act of 1976* (RCRA) and *Washington Administrative Code*, Chapter 173-303.
6.	Scott "SKA-PAK"[1] Training-SKA	Course instructs employees in the proper use of the Scott "SKA-PAK" for entry, exit, or work in conditions "immediately dangerous to life and health" and instructs employees to recognize and handle emergencies.
7.	Cardiopulmonary Resuscitation	Course of the American Heart Association that provides certification in cardiopulmonary resuscitation for the single rescuer (Heartsaver Course).
8.	Fire Extinguisher Safety	Course provides videocassette presentation that covers types of portable fire extinguishers and the proper usage for each.
9.	Waste Site--Advanced	Course provides environmental safety information for RCRA and/or *Comprehensive Environmental Response, Compensation, and Liability Act of 1980* operations and sites. Topics include regulations and acronyms, occupational health and safety, chemical hazard information, toxicology, personal protective equipment and respirators, site safety, decontamination, and chemical monitoring instrumentation.

[1]Scott SKA-PAK is a trademark of Figgie International, Incorporated.

Table 7C-1. Environmental and Hazardous Material Safety Training. (2 Sheets)

	Course name	Description
10.	Waste Site Field Experience	Course is a 3-day field experience under the direct supervision of a trained, experienced supervisor.
11.	Hazardous Waste Shipment Certification	Course provides an in depth look at federal, state, and Hanford Site requirements for nonradioactive hazardous and/or dangerous waste management and transportation.
12.	Certification of Hazardous Material Shipments	Course provides training in dangerous material regulation of the U.S. Department of Transportation, as required by law, to those who certify the compliance of Hanford Site hazardous and/or dangerous material shipments. The main focus is on the proper preparation and release of radioactive material shipments.
13.	Hazardous Waste Site Supervisor/Manager	Course provides specialized training to operations and site management in the following programs: safety and health, employee training, personal protective equipment, spill containment, and health hazard monitoring procedures and techniques.

APPENDIX 7D

SUMMARY OF PRE- AND POST-EXPEDITED RESPONSE ACTION SAMPLING DATA

Location 316-5E PRE

Parameter	Samp# Depth	B01034 0.50		B01037 0.50		B01038 0.50		B01040 0.50		B01043 0.50		B01046 0.50	
	Units	Result	Q	Result	Q	Result	Q	Result	Q	Result	Q	Result	Q
Radionuclides													
AMERICIUM-241	pCi/g	N/R		1.900	R	N/R		N/R		N/R		N/R	
BARIUM-140		N/R		N/R		N/R		N/R		N/R		N/R	
BERYLLIUM-7		N/R		N/R		N/R		N/R		N/R		N/R	
CERIUM-141		N/R		N/R		N/R		N/R		N/R		N/R	
CERIUM-141 GAMMA SCAN	pCi/g	N/R		N/R		N/R		N/R		N/R		N/R	
CERIUM-144		N/R		N/R		N/R		N/R		N/R		N/R	
CURIUM-244	pCi/g	N/R		1.200	R	N/R		N/R		N/R		N/R	
COBALT-58		N/R		N/R		N/R		N/R		N/R		N/R	
COBALT-60		N/R		N/R		N/R		N/R		N/R		N/R	
COBALT-60 GAMMA SCAN	pCi/g	0.554	J	N/R		0.788	J	0.963	J	0.137	J	1.034	J
CHROMIUM-51 GAMMA SCAN	pCi/g	N/R		N/R		N/R		N/R		N/R		N/R	
CESIUM-134		N/R		N/R		N/R		N/R		N/R		N/R	
CESIUM-134 GAMMA SCAN	pCi/g	N/R		N/R		N/R		N/R		N/R		N/R	
CESIUM-137		N/R		N/R		N/R		N/R		N/R		N/R	
CESIUM-137 GAMMA SCAN	pCi/g	1.083	J	N/R		0.892		1.140	J	0.608	J	1.067	J
IRON-59		N/R		N/R		N/R		N/R		N/R		N/R	
GROSS ALPHA SCAN	pCi/g	3116.000	J	9500.000	R	3088.000	J	4450.000	J	23.700	J	54.700	J
GROSS BETA SCAN	pCi/g	5444.000	J	21000.000	R	11180.000	J	12210.000	J	37.300	J	80.900	J
TRITIUM	pCi/g	N/R		0.150	UR	N/R		N/R		N/R		N/R	
IODINE-131		N/R		N/R		N/R		N/R		N/R		N/R	
POTASSIUM-40		N/R		N/R		N/R		N/R		N/R		N/R	
POTASSIUM-40 GAMMA SCAN	pCi/g	N/R		N/R		N/R		N/R		N/R		N/R	
LANTHANUM-140 GAMMA SCAN	pCi/g	N/R		N/R		N/R		N/R		N/R		N/R	
MANGANESE-54		N/R		N/R		N/R		N/R		N/R		N/R	
NEPTUNIUM-237		N/R		N/R		N/R		N/R		N/R		N/R	
PLUTONIUM-235		N/R		N/R		N/R		N/R		N/R		N/R	
PLUTONIUM-238	pCi/g	0.226	R	N/R		1.239	R	0.610	R	0.219	R	0.224	R
PLUTONIUM-239	pCi/g	1.557	R	1.600	R	4.108	R	4.720	R	0.197	R	0.298	R
RADIUM-226	pCi/g	N/R		4.000	UR	N/R		N/R		N/R		N/R	
RADIUM-226 GAMMA SCAN	pCi/g	1.244	J	N/R		0.994	J	0.971	J	0.402	J	0.555	J
RADIUM-228	pCi/g	N/R		4.000	UR	N/R		N/R		N/R		N/R	
RUTHENIUM-103		N/R		N/R		N/R		N/R		N/R		N/R	
RUTHENIUM-106		N/R		N/R		N/R		N/R		N/R		N/R	
STRONTIUM-89		N/R		N/R		N/R		N/R		N/R		N/R	
STRONTIUM-90	pCi/g	15.120	J	0.190	R	12.000	J	18.490	J	0.396	UJ	0.601	J
TECHNETIUM-99	pCi/g	738.500	R	1600.000	R	3603.000	R	3446.000	R	27.030	R	23.640	R
THORIUM-228		N/R		N/R		N/R		N/R		N/R		N/R	
THORIUM-228 GAMMA SCAN	pCi/g	5.385	J	N/R		15.730	J	16.790	J	0.805	J	0.713	J

Location 316-5E PRE

Parameter	Samp# Depth	B01034 0.50		B01037 0.50		B01038 0.50		B01040 0.50		B01043 0.50		B01046 0.50	
	Units	Result	Q	Result	Q	Result	Q	Result	Q	Result	Q	Result	Q
THORIUM-230	pCi/g	N/R		14.000	R	N/R		N/R		N/R		N/R	
THORIUM-232	pCi/g	N/R		0.460	R	N/R		N/R		N/R		N/R	
THORIUM-232 GAMMA SCAN	pCi/g	1.429	J	N/R		1.751	J	1.656	J	0.566	J	0.674	J
TOTAL URANIUM	pCi/g	6718.000	J	21000.000	R	15535.000	J	20034.000	J	143.600	J	144.600	J
URANIUM-234	pCi/g	3565.000	R	72.000	R	8790.000	R	9747.000	R	105.700	R	71.510	R
URANIUM-235	pCi/g	318.600	R	7.900	R	1556.000	R	379.200	R	10.110	R	4.200	R
URANIUM-235 GAMMA SCAN	pCi/g	N/R		N/R		638.400		N/R		N/R		N/R	
URANIUM-238	pCi/g	2917.000	R	64.000	R	6032.000	R	9132.000	R	76.500	R	68.980	R
URANIUM-238 GAMMA SCAN	pCi/g	N/R		N/R		9143.000		N/R		N/R		N/R	
ZINC-65		N/R		N/R		N/R		N/R		N/R		N/R	
ZINC-65 GAMMA SCAN	pCi/g	N/R		N/R		N/R		N/R		N/R		N/R	
ZIRCONIUM-95		N/R		N/R		N/R		N/R		N/R		N/R	

Location 316-5E PRE

Parameter	Samp# Depth	B01033 3.00		B01036 3.00		B01042 3.00		B01045 3.00		B01032 5.00		B01035 5.00	
	Units	Result	Q	Result	Q	Result	Q	Result	Q	Result	Q	Result	Q
Radionuclides													
AMERICIUM-241	pCi/g	N/R		N/R		N/R		N/R		N/R		N/R	
BARIUM-140		N/R		N/R		N/R		N/R		N/R		N/R	
BERYLLIUM-7		N/R		N/R		N/R		N/R		N/R		N/R	
CERIUM-141		N/R		N/R		N/R		N/R		N/R		N/R	
CERIUM-141 GAMMA SCAN	pCi/g	N/R		N/R		N/R		N/R		N/R		N/R	
CERIUM-144		N/R		N/R		N/R		N/R		N/R		N/R	
CURIUM-244	pCi/g	N/R		N/R		N/R		N/R		N/R		N/R	
COBALT-58		N/R		N/R		N/R		N/R		N/R		N/R	
COBALT-60		N/R		N/R		N/R		N/R		N/R		N/R	
COBALT-60 GAMMA SCAN	pCi/g	0.113	J	0.359	J	0.067	J	0.045	J	0.220	J	0.082	J
CHROMIUM-51 GAMMA SCAN	pCi/g	N/R		N/R		N/R		N/R		N/R		N/R	
CESIUM-134		N/R		N/R		N/R		N/R		N/R		N/R	
CESIUM-134 GAMMA SCAN	pCi/g	N/R		N/R		N/R		N/R		N/R		N/R	
CESIUM-137		N/R		N/R		N/R		N/R		N/R		N/R	
CESIUM-137 GAMMA SCAN	pCi/g	0.553	J	0.528		0.341	J	0.344	J	0.523	J	0.393	J
IRON-59		N/R		N/R		N/R		N/R		N/R		N/R	
GROSS ALPHA SCAN	pCi/g	316.000	J	1618.000	J	62.500	J	7.690	UJ	24.300	J	48.800	J
GROSS BETA SCAN	pCi/g	454.000	J	1787.000	J	120.000	J	13.900	J	29.800	J	66.100	J
TRITIUM	pCi/g	N/R		N/R		N/R		N/R		N/R		N/R	
IODINE-131		N/R		N/R		N/R		N/R		N/R		N/R	
POTASSIUM-40		N/R		N/R		N/R		N/R		N/R		N/R	
POTASSIUM-40 GAMMA SCAN	pCi/g	N/R		7.920		N/R		N/R		N/R		N/R	
LANTHANUM-140 GAMMA SCAN	pCi/g	N/R		N/R		N/R		N/R		N/R		N/R	
MANGANESE-54		N/R		N/R		N/R		N/R		N/R		N/R	
NEPTUNIUM-237		N/R		N/R		N/R		N/R		N/R		N/R	
PLUTONIUM-235		N/R		N/R		N/R		N/R		N/R		N/R	
PLUTONIUM-238	pCi/g	0.073	R	0.156	R	0.027	R	-0.006	R	0.192	R	0.022	R
PLUTONIUM-239	pCi/g	0.168	R	0.531	R	-0.027	R	0.266	R	1.391	R	0.011	R
RADIUM-226	pCi/g	N/R		N/R		N/R		N/R		N/R		N/R	
RADIUM-226 GAMMA SCAN	pCi/g	0.485	J	0.404	J	0.382	J	0.434	J	0.421	J	0.393	J
RADIUM-228	pCi/g	N/R		N/R		N/R		N/R		N/R		N/R	
RUTHENIUM-103		N/R		N/R		N/R		N/R		N/R		N/R	
RUTHENIUM-106		N/R		N/R		N/R		N/R		N/R		N/R	
STRONTIUM-89		N/R		N/R		N/R		N/R		N/R		N/R	
STRONTIUM-90	pCi/g	1.314	J	6.727	J	0.614	J	0.201	UJ	0.201	UJ	0.212	UJ
TECHNETIUM-99	pCi/g	99.800	R	690.600	R	22.000	R	11.500	R	3.805	R	2251.000	R
THORIUM-228		N/R		N/R		N/R		N/R		N/R		N/R	
THORIUM-228 GAMMA SCAN	pCi/g	1.533	J	0.129	UJ	0.655	J	0.518	J	0.642	J	0.573	J

Location 316-5E PRE

Parameter	Samp# Depth	B01033 3.00		B01036 3.00		B01042 3.00		B01045 3.00		B01032 5.00		B01035 5.00	
	Units	Result	Q	Result	Q	Result	Q	Result	Q	Result	Q	Result	Q
THORIUM-230	pCi/g	N/R		N/R		N/R		N/R		N/R		N/R	
THORIUM-232	pCi/g	N/R		N/R		N/R		N/R		N/R		N/R	
THORIUM-232 GAMMA SCAN	pCi/g	0.626	J	0.828	J	0.651	J	0.518	J	0.595	J	0.594	J
TOTAL URANIUM	pCi/g	1032.000	J	2132.000	J	61.690	J	12.070	J	27.830	J	104.200	J
URANIUM-234	pCi/g	502.700	R	1492.000	R	42.830	R	5.542	R	12.110	R	67.690	R
URANIUM-235	pCi/g	73.880	R	138.300	R	7.391	R	0.679	R	1.715	R	9.186	R
URANIUM-235 GAMMA SCAN	pCi/g	N/R		84.640		N/R		N/R		N/R		N/R	
URANIUM-238	pCi/g	356.500	R	1072.000	R	32.880	R	4.289	R	9.190	R	49.830	R
URANIUM-238 GAMMA SCAN	pCi/g	N/R		1246.000		N/R		N/R		N/R		N/R	
ZINC-65		N/R		N/R		N/R		N/R		N/R		N/R	
ZINC-65 GAMMA SCAN	pCi/g	N/R		N/R		N/R		N/R		N/R		N/R	
ZIRCONIUM-95		N/R		N/R		N/R		N/R		N/R		N/R	

Location 316-5E PRE

Parameter	Samp# Depth	B01041 5.00		B01044 5.00	
	Units	Result	Q	Result	Q
Radionuclides					
AMERICIUM-241	pCi/g	N/R		N/R	
BARIUM-140		N/R		N/R	
BERYLLIUM-7		N/R		N/R	
CERIUM-141		N/R		N/R	
CERIUM-141 GAMMA SCAN	pCi/g	N/R		N/R	
CERIUM-144		N/R		N/R	
CURIUM-244	pCi/g	N/R		N/R	
COBALT-58		N/R		N/R	
COBALT-60		N/R		N/R	
COBALT-60 GAMMA SCAN	pCi/g	0.084	J	0.031	J
CHROMIUM-51 GAMMA SCAN	pCi/g	N/R		N/R	
CESIUM-134		N/R		N/R	
CESIUM-134 GAMMA SCAN	pCi/g	N/R		N/R	
CESIUM-137		N/R		N/R	
CESIUM-137 GAMMA SCAN	pCi/g	0.038	J	0.685	J
IRON-59		N/R		N/R	
GROSS ALPHA SCAN	pCi/g	10.500	UJ	19.300	J
GROSS BETA SCAN	pCi/g	16.700	J	37.700	J
TRITIUM	pCi/g	N/R		N/R	
IODINE-131		N/R		N/R	
POTASSIUM-40		N/R		N/R	
POTASSIUM-40 GAMMA SCAN	pCi/g	N/R		N/R	
LANTHANUM-140 GAMMA SCAN	pCi/g	N/R		N/R	
MANGANESE-54		N/R		N/R	
NEPTUNIUM-237		N/R		N/R	
PLUTONIUM-235		N/R		N/R	
PLUTONIUM-238	pCi/g	0.000	R	0.055	R
PLUTONIUM-239	pCi/g	-0.006	R	0.087	R
RADIUM-226	pCi/g	N/R		N/R	
RADIUM-226 GAMMA SCAN	pCi/g	0.390	J	0.422	J
RADIUM-228	pCi/g	N/R		N/R	
RUTHENIUM-103		N/R		N/R	
RUTHENIUM-106		N/R		N/R	
STRONTIUM-89		N/R		N/R	
STRONTIUM-90	pCi/g	0.040	UJ	0.362	UJ
TECHNETIUM-99	pCi/g	1.320	R	13.010	R
THORIUM-228		N/R		N/R	
THORIUM-228 GAMMA SCAN	pCi/g	0.563	J	0.615	J

Location 316-5E PRE

Parameter	Samp# Depth	B01041 5.00		B01044 5.00	
	Units	Result	Q	Result	Q
THORIUM-230	pCi/g	N/R		N/R	
THORIUM-232	pCi/g	N/R		N/R	
THORIUM-232 GAMMA SCAN	pCi/g	0.562	J	0.583	J
TOTAL URANIUM	pCi/g	15.890	J	74.690	J
URANIUM-234	pCi/g	12.980	R	36.670	R
URANIUM-235	pCi/g	2.133	R	2.942	R
URANIUM-235 GAMMA SCAN	pCi/g	N/R		N/R	
URANIUM-238	pCi/g	8.642	R	30.140	R
URANIUM-238 GAMMA SCAN	pCi/g	N/R		N/R	
ZINC-65		N/R		N/R	
ZINC-65 GAMMA SCAN	pCi/g	N/R		N/R	
ZIRCONIUM-95		N/R		N/R	

Location 316-5W PRE

Parameter	Samp# Depth	B01020 0.50		B01021 0.50		B01022 0.50		B01023 0.50		B01019 3.00		B01018 5.00	
	Units	Result	Q	Result	Q	Result	Q	Result	Q	Result	Q	Result	Q
Radionuclides													
AMERICIUM-241	pCi/g	N/R		0.200	UR	N/R		N/R		N/R		N/R	
BARIUM-140	pCi/g	N/R		700.000	UR	N/R		N/R		N/R		N/R	
BERYLLIUM-7	pCi/g	N/R		10.000	UR	N/R		N/R		N/R		N/R	
CERIUM-141	pCi/g	N/R		10.000	UR	N/R		N/R		N/R		N/R	
CERIUM-141 GAMMA SCAN	pCi/g	N/R		N/R		N/R		N/R		N/R		N/R	
CERIUM-144	pCi/g	N/R		4.000	UR	N/R		N/R		N/R		N/R	
CURIUM-244	pCi/g	N/R		0.700	UR	N/R		N/R		N/R		N/R	
COBALT-58	pCi/g	N/R		0.900	UR	N/R		N/R		N/R		N/R	
COBALT-60	pCi/g	N/R		2.510	R	N/R		N/R		N/R		N/R	
COBALT-60 GAMMA SCAN	pCi/g	1.569	J	N/R		1.775	J	0.718	J	0.649	J	0.058	UJ
CHROMIUM-51 GAMMA SCAN	pCi/g	N/R		N/R		N/R		N/R		N/R		N/R	
CESIUM-134	pCi/g	N/R		0.300	UR	N/R		N/R		N/R		N/R	
CESIUM-134 GAMMA SCAN	pCi/g	N/R		N/R		N/R		N/R		N/R		N/R	
CESIUM-137	pCi/g	N/R		2.290	R	N/R		N/R		N/R		N/R	
CESIUM-137 GAMMA SCAN	pCi/g	1.731		N/R		1.324		0.601		2.390		0.376	
IRON-59	pCi/g	N/R		3.000	UR	N/R		N/R		N/R		N/R	
GROSS ALPHA SCAN	pCi/g	2692.000		740.000	R	1645.000		515.000		147.000		42.500	
GROSS BETA SCAN	pCi/g	2773.000		1100.000	R	1523.000		335.000		151.000		41.000	
TRITIUM	pCi/g	N/R		0.240	UR	N/R		N/R		N/R		N/R	
IODINE-131	pCi/g	N/R		100000.000	UR	N/R		N/R		N/R		N/R	
POTASSIUM-40	pCi/g	N/R		2.000	UR	N/R		N/R		N/R		N/R	
POTASSIUM-40 GAMMA SCAN	pCi/g	N/R		N/R		N/R		N/R		N/R		N/R	
LANTHANUM-140 GAMMA SCAN	pCi/g	N/R		N/R		N/R		N/R		N/R		N/R	
MANGANESE-54	pCi/g	N/R		0.300	UR	N/R		N/R		N/R		N/R	
NEPTUNIUM-237	pCi/g	N/R		0.500	UR	N/R		N/R		N/R		N/R	
PLUTONIUM-235		N/R		N/R		N/R		N/R		N/R		N/R	
PLUTONIUM-238	pCi/g	0.386	JR	N/R		0.109	JUR	0.104	JR	0.096	JR	0.010	JUR
PLUTONIUM-239	pCi/g	0.482	JR	0.180	R	0.304	JR	0.208	JR	0.174	JR	0.019	JUR
RADIUM-226	pCi/g	N/R		1610.000	R	N/R		N/R		N/R		N/R	
RADIUM-226 GAMMA SCAN	pCi/g	1.235	J	N/R		0.843	J	1.128	J	0.813	J	0.317	J
RADIUM-228	pCi/g	N/R		2.100	R	N/R		N/R		N/R		N/R	
RUTHENIUM-103	pCi/g	N/R		3.000	UR	N/R		N/R		N/R		N/R	
RUTHENIUM-106	pCi/g	N/R		3.000	UR	N/R		N/R		N/R		N/R	
STRONTIUM-89	pCi/g	N/R		0.400	UR	N/R		N/R		N/R		N/R	
STRONTIUM-90	pCi/g	1.613		0.200	UR	0.791		1.499		-0.561	U	0.702	
TECHNETIUM-99	pCi/g	651.900	R	100.000	R	516.600	R	369.900	R	22.220	R	0.458	R
THORIUM-228	pCi/g	N/R		2.720	R	N/R		N/R		N/R		N/R	
THORIUM-228 GAMMA SCAN	pCi/g	2.590	J	N/R		1.242	J	1.468	J	1.079	J	0.558	J

Location 316-5W PRE

Parameter	Samp# Depth	B01020 0.50		B01021 0.50		B01022 0.50		B01023 0.50		B01019 3.00		B01018 5.00	
	Units	Result	Q	Result	Q	Result	Q	Result	Q	Result	Q	Result	Q
THORIUM-230	pCi/g	N/R		0.670	R	N/R		N/R		N/R		N/R	
THORIUM-232	pCi/g	N/R		0.069	R	N/R		N/R		N/R		N/R	
THORIUM-232 GAMMA SCAN	pCi/g	0.716		N/R		0.990		1.252		1.081		0.488	
TOTAL URANIUM	pCi/g	1893.000		N/R		1967.000		499.700		206.700		33.300	
URANIUM-234	pCi/g	2602.000	R	390.000	R	1515.000	R	256.800	R	119.600	R	21.920	R
URANIUM-235	pCi/g	216.300	R	19.000	R	99.790	R	-11.950	R	4.642	R	2.855	R
URANIUM-235 GAMMA SCAN	pCi/g	N/R		N/R		N/R		N/R		N/R		N/R	
URANIUM-238	pCi/g	1779.000	R	290.000	R	1062.000	R	282.700	R	93.250	R	15.360	R
URANIUM-238 GAMMA SCAN	pCi/g	N/R		N/R		N/R		N/R		N/R		N/R	
ZINC-65	pCi/g	N/R		0.500	UR	N/R		N/R		N/R		N/R	
ZINC-65 GAMMA SCAN	pCi/g	N/R		N/R		N/R		N/R		N/R		N/R	
ZIRCONIUM-95	pCi/g	N/R		3.000	UR	N/R		N/R		N/R		N/R	

Location 316-5 VPT-1

Parameter	Samp# Depth	B01016 0.50		B014Q3 1.50		B014Q2 4.50		B014Q4 6.50		B014Q5 11.00		B014Q8 17.00	
	Units	Result	Q	Result	Q	Result	Q	Result	Q	Result	Q	Result	Q
Radionuclides													
AMERICIUM-241		N/R		N/R		N/R		N/R		N/R		N/R	
BARIUM-140		N/R		N/R		N/R		N/R		N/R		N/R	
BERYLLIUM-7		N/R		N/R		N/R		N/R		N/R		N/R	
CERIUM-141		N/R		N/R		N/R		N/R		N/R		N/R	
CERIUM-141 GAMMA SCAN	pCi/g	N/R		N/R		N/R		N/R		N/R		N/R	
CERIUM-144		N/R		N/R		N/R		N/R		N/R		N/R	
CURIUM-244		N/R		N/R		N/R		N/R		N/R		N/R	
COBALT-58		N/R		N/R		N/R		N/R		N/R		N/R	
COBALT-60		N/R		N/R		N/R		N/R		N/R		N/R	
COBALT-60 GAMMA SCAN	pCi/g	0.140	J	0.069	UJ	0.036	UJ	4.242	UJ	0.045	UJ	0.056	UJ
CHROMIUM-51 GAMMA SCAN	pCi/g	N/R		N/R		N/R		N/R		N/R		N/R	
CESIUM-134		N/R		N/R		N/R		N/R		N/R		N/R	
CESIUM-134 GAMMA SCAN	pCi/g	N/R		N/R		N/R		N/R		N/R		N/R	
CESIUM-137		N/R		N/R		N/R		N/R		N/R		N/R	
CESIUM-137 GAMMA SCAN	pCi/g	1.212		0.907		1.465		3.612	UJ	0.020	UJ	0.445	
IRON-59		N/R		N/R		N/R		N/R		N/R		N/R	
GROSS ALPHA SCAN	pCi/g	165.000		98.200		188.000		20.100		19.600		71.500	
GROSS BETA SCAN	pCi/g	120.000		73.300		119.000		30.200		19.600		34.400	
TRITIUM		N/R		N/R		N/R		N/R		N/R		N/R	
IODINE-131		N/R		N/R		N/R		N/R		N/R		N/R	
POTASSIUM-40		N/R		N/R		N/R		N/R		N/R		N/R	
POTASSIUM-40 GAMMA SCAN	pCi/g	N/R		N/R		N/R		N/R		N/R		N/R	
LANTHANUM-140 GAMMA SCAN	pCi/g	N/R		N/R		N/R		N/R		N/R		N/R	
MANGANESE-54		N/R		N/R		N/R		N/R		N/R		N/R	
NEPTUNIUM-237		N/R		N/R		N/R		N/R		N/R		N/R	
PLUTONIUM-235		N/R		N/R		N/R		N/R		N/R		N/R	
PLUTONIUM-238	pCi/g	0.006	JUR	N/R		N/R		N/R		N/R		N/R	
PLUTONIUM-239	pCi/g	0.037	JR	N/R		N/R		N/R		N/R		N/R	
RADIUM-226		N/R		N/R		N/R		N/R		N/R		N/R	
RADIUM-226 GAMMA SCAN	pCi/g	0.317		0.372		0.362		1.572		0.369		0.377	
RADIUM-228		N/R		N/R		N/R		N/R		N/R		N/R	
RUTHENIUM-103		N/R		N/R		N/R		N/R		N/R		N/R	
RUTHENIUM-106		N/R		N/R		N/R		N/R		N/R		N/R	
STRONTIUM-89		N/R		N/R		N/R		N/R		N/R		N/R	
STRONTIUM-90	pCi/g	0.088	U	0.213	U	0.106	U	-0.284	U	0.900		0.184	UJ
TECHNETIUM-99	pCi/g	3.680	R	N/R		N/R		N/R		N/R		N/R	
THORIUM-228		N/R		N/R		N/R		N/R		N/R		N/R	
THORIUM-228 GAMMA SCAN	pCi/g	0.413		0.477		0.690		0.829		0.080	UJ	0.431	

Location 316-5 VPT-1

Parameter	Samp# Depth	B01016 0.50		B01Q03 1.50		B01Q02 4.50		B01Q04 6.50		B01Q05 11.00		B01Q08 17.00	
	Units	Result	Q	Result	Q	Result	Q	Result	Q	Result	Q	Result	Q
THORIUM-230		N/R		N/R		N/R		N/R		N/R		N/R	
THORIUM-232		N/R		N/R		N/R		N/R		N/R		N/R	
THORIUM-232 GAMMA SCAN	pCi/g	0.383		0.699		0.738		1.632	UJ	0.447		0.601	
TOTAL URANIUM	pCi/g	80.000	JR	N/R		N/R		N/R		N/R		N/R	
URANIUM-234	pCi/g	59.690	R	44.890	R	59.170	R	16.860	R	16.060	R	26.270	R
URANIUM-235	pCi/g	3.930	R	6.100	R	7.730	R	2.050	R	2.160	R	3.560	R
URANIUM-235 GAMMA SCAN	pCi/g	N/R		N/R		N/R		N/R		N/R		N/R	
URANIUM-238	pCi/g	44.060	R	32.340	R	43.510	R	12.030	R	11.260	R	18.620	R
URANIUM-238 GAMMA SCAN	pCi/g	N/R		N/R		N/R		N/R		N/R		N/R	
ZINC-65		N/R		N/R		N/R		N/R		N/R		N/R	
ZINC-65 GAMMA SCAN	pCi/g	N/R		N/R		N/R		N/R		N/R		N/R	
ZIRCONIUM-95		N/R		N/R		N/R		N/R		N/R		N/R	

Location 316-5E POST

Parameter	Samp# Depth	B01025 0.50		B01027 0.50		B01029 0.50		B01031 0.50	
	Units	Result	Q	Result	Q	Result	Q	Result	Q
Radionuclides									
AMERICIUM-241		N/R		N/R		N/R		N/R	
BARIUM-140		N/R		N/R		N/R		N/R	
BERYLLIUM-7		N/R		N/R		N/R		N/R	
CERIUM-141		N/R		N/R		N/R		N/R	
CERIUM-141 GAMMA SCAN	pCi/g	N/R		N/R		N/R		N/R	
CERIUM-144		N/R		N/R		N/R		N/R	
CURIUM-244		N/R		N/R		N/R		N/R	
COBALT-58		N/R		N/R		N/R		N/R	
COBALT-60		N/R		N/R		N/R		N/R	
COBALT-60 GAMMA SCAN	pCi/g	0.051		0.322		0.000	UJ	0.037	UJ
CHROMIUM-51 GAMMA SCAN	pCi/g	N/R		N/R		N/R		N/R	
CESIUM-134		N/R		N/R		N/R		N/R	
CESIUM-134 GAMMA SCAN	pCi/g	N/R		N/R		N/R		N/R	
CESIUM-137		N/R		N/R		N/R		N/R	
CESIUM-137 GAMMA SCAN	pCi/g	0.238		0.698		0.021	UJ	0.035	
IRON-59		N/R		N/R		N/R		N/R	
GROSS ALPHA SCAN	pCi/g	4.370	UJ	6.830		7.260		3.210	UJ
GROSS BETA SCAN	pCi/g	9.310	J	15.300	J	15.600	J	15.000	J
TRITIUM		N/R		N/R		N/R		N/R	
IODINE-131		N/R		N/R		N/R		N/R	
POTASSIUM-40		N/R		N/R		N/R		N/R	
POTASSIUM-40 GAMMA SCAN	pCi/g	N/R		N/R		N/R		N/R	
LANTHANUM-140 GAMMA SCAN	pCi/g	N/R		N/R		N/R		N/R	
MANGANESE-54		N/R		N/R		N/R		N/R	
NEPTUNIUM-237		N/R		N/R		N/R		N/R	
PLUTONIUM-235		N/R		N/R		N/R		N/R	
PLUTONIUM-238	pCi/g	0.210	JUR	0.004	JUR	-0.004	JUR	0.013	JUR
PLUTONIUM-239	pCi/g	0.004	JUR	0.008	JUR	0.008	JUR	0.064	JUR
RADIUM-226		N/R		N/R		N/R		N/R	
RADIUM-226 GAMMA SCAN	pCi/g	0.349	J	0.256	J	0.266	J	0.237	J
RADIUM-228		N/R		N/R		N/R		N/R	
RUTHENIUM-103		N/R		N/R		N/R		N/R	
RUTHENIUM-106		N/R		N/R		N/R		N/R	
STRONTIUM-89		N/R		N/R		N/R		N/R	
STRONTIUM-90	pCi/g	0.407	UJ	0.407	UJ	0.386	UJ	-0.937	UJ
TECHNETIUM-99	pCi/g	0.787	R	1.658	R	0.321	R	0.448	R
THORIUM-228		N/R		N/R		N/R		N/R	
THORIUM-228 GAMMA SCAN	pCi/g	0.444	J	0.374	J	0.348	J	0.334	J

DISTRIBUTION

ONSITE (35 copies)

U.S. Department of Energy
Richland Operations Office

M.J. Furman	H0-12
E.M. Mattlin	A5-15
R.G. McLeod (20)	H0-12
DOE-RL Public Reading Room	H2-52

ERC Team

J. W. Badden	H9-03
R. A. Carlson	L6-06
V. R. Dronen	H0-17
M. C. Hughes	H0-14
S. J. Ingle	H9-02
C. R. Johnson	L6-06
T. L. Rodriguez	H0-17
J. G. Woolard	H0-17
Document and Info Services (4)	H0-09

PNNL

J.W. Lindberg	K6-81