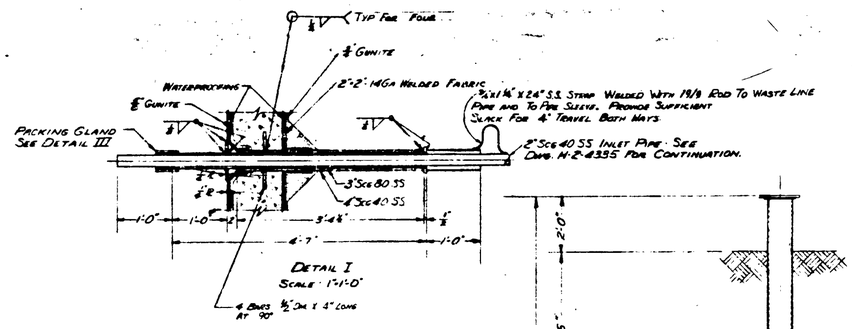

DETAIL I
SCALE: 1"=1'-0"

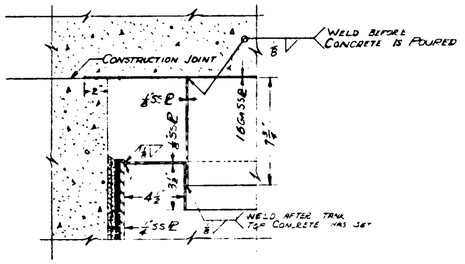

DETAIL II
SCALE 3"=1'-0"

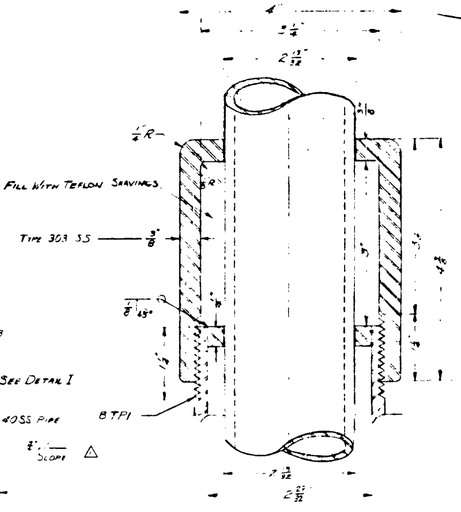

DETAIL III
SCALE FULL SIZE

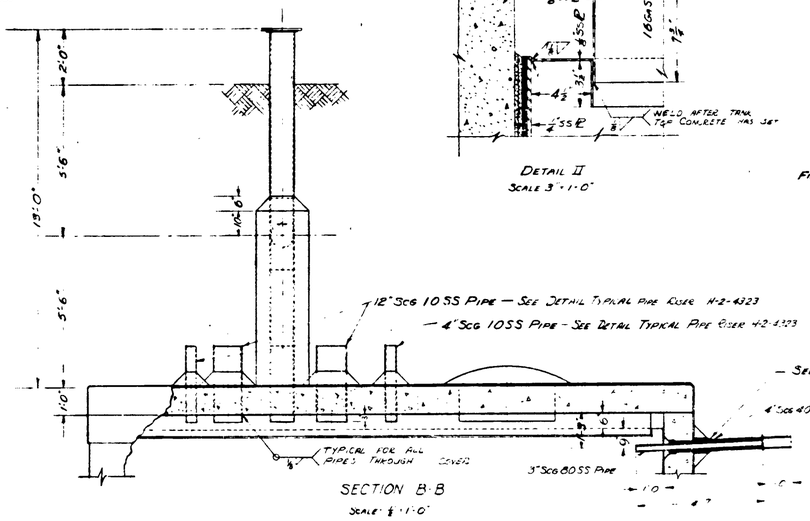

SECTION B-B
SCALE: ½"=1'-0"

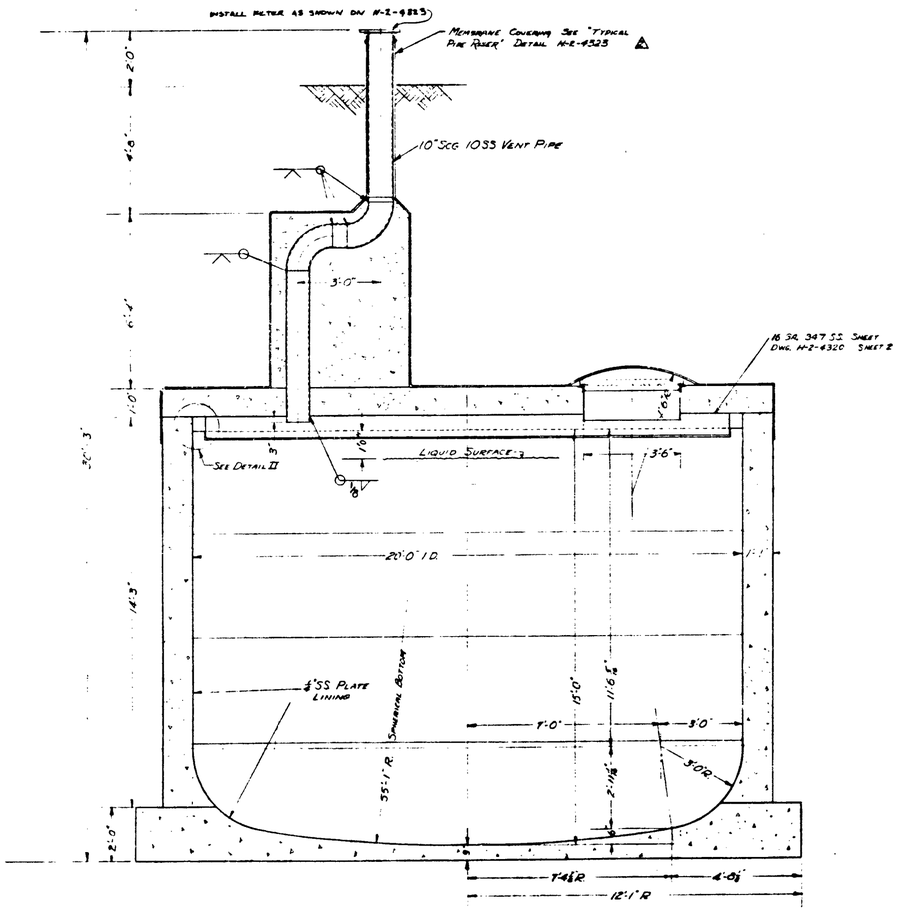

SECTION A-A
SCALE: ½"=1'-0"

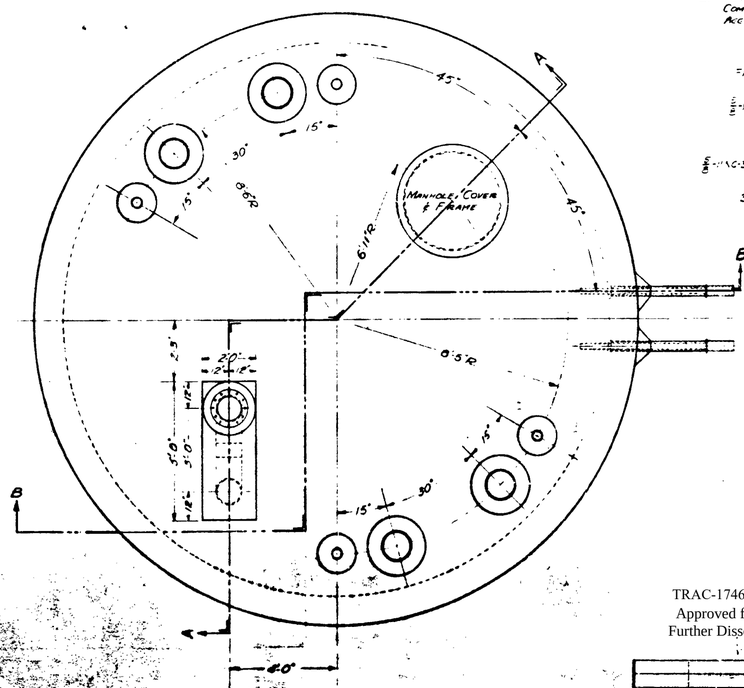

PLAN OF TOP
SCALE: ½"=1'-0"

GENERAL NOTES

1. STEEL TANK LINER MUST BE FULL OF WATER WHEN WALL CONCRETE IS POURED. HEAT AND MAINTAIN WATER AT 100°F DURING ALL WALL CONCRETE OPERATIONS.
2. ALL CONCRETE USED FOR STORAGE TANK SHALL HAVE A MINIMUM ALLOWABLE COMPRESSIVE STRENGTH OF 3000 PSI AT 28 DAYS. MAXIMUM SIZE OF AGGREGATE TO BE 1½" OR LESS.

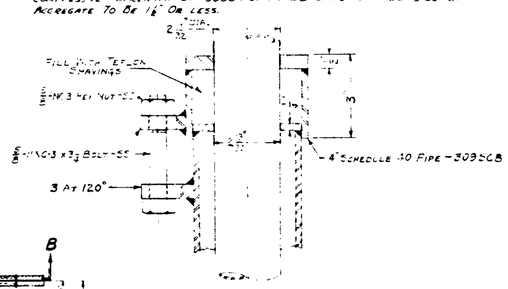

DETAIL III
SCALE: HALF SIZE

NONE

NO.	DESCRIPTION	BY	DATE	APPVD	DATE	APPVD
	CHECKED FOR AS BUILT					
	CONTINUED COVERING UP PIPE					
	SLOPE WAS 1/16" PER FOOT					

REVISIONS

SCALE: AS SHOWN	BY	DEPT.	DATE
DRAWN BY:			
CHECKED BY:			
ENG. REP. NO.			
PROJECT NO.			

APPROVALS

DWG. NO.	TITLE
H-2-4303	DETAILS
H-2-4322	DOME REINFORCING
H-2-4321	BASE AND WALL REINFORCING
H-2-4320	TANK LINER SH. 1 & 2
H-2-4108	DRAWING SCHEDULE

REFERENCE DRAWINGS

GENERAL ELECTRIC CO.
HANFORD WORKS
DESIGN DIVISION
HOT SEMIWORKS
TANK SECTIONS
TK-70

BLDG. NO'S. 241-CX DWG. NO. H-2-4319

TRAC-1746, Rev. 0, 06/11/2019
Approved for Public Release;
Further Dissemination Unlimited

BEST IMAGE POSSIBLE