START

0021276

Final

Meeting Minutes Transmittal/Approval
Unit Managers Meeting: Waste Water Pilot Plant RD & D Permit

Meeting Held February 6, 1992
Environmental Protection Agency Region 10
1200 Sixth Avenue
Seattle, Washington

Appvl. Clifford E. Clark Date: 3/19/92
Clifford E. Clark, EAP, DOE-RL

Appvl. Daniel L. Duncan Date: 3/19/92
Daniel L. Duncan, Environmental Protection Agency Region 10, RCRA Program Manager

Appvl. Not Present Date:
Paul Stasch, RCRA Unit Supervisor, Washington State Department of Ecology

Appvl. S. M. Price Date: 4-1-92
Susan M. Price, WHC, RCRA Permitting, Contractor Representative

Appvl. Steven J. Skurla Date: 3/19/92
Steven J. Skurla, WHC, Contractor Representative

PURPOSE:
Meeting Minutes are attached. These minutes are from the C-018 RD & D Permit held February 6, 1992. Minutes are comprised of the following:

Attachment 1 - Summary of Discussion and Commitments
Attachment 2 - Attendance List
Attachment 3 - Agenda
Attachment 4 - Waste Water Pilot Plant RD&D Permit Application Schedule
Attachment 5 - Notice of Deficiency Response Table
Attachment 6 - Radiation Protection - Air Emissions
Attachment 7 - Waste Water Pilot Plant Flow Chart
Attachment 8 - Critical Parameter Selection Criteria
Attachment 9 - Inspection Strategy
Attachment 10 - Data Acquisition Protocol for Test Objectives
Attachment 11 - Page 8-4 from Application
Attachment 12 - Notification of Modification for the 1706 KE-Laboratory

9212579205 6

1 JUN 1992
RECEIVED
EDMC

Attachment 1

Waste Water Pilot Plant RD & D Permit Meeting
Environmental Protection Agency Region 10
Seattle, Washington
February 6, 1992

Summary of Discussion and Commitments

Due to the late arrival of representatives from RL, WHC and SWEC (due to fog), the meeting did not begin until 1:30 pm. Paul Stasch and Bob King of Ecology were waited until approximately 12:30. However, Paul Stasch and Bob King were able to discuss the schedule for the permit application with Roger Bowman (WHC), who had driven to the meeting.

Schedule for Completion of Permit Application

EPA has accepted RL's schedule for completion of the permit application (refer to Attachment 4). The completed draft permit application will be transmitted on April 8, 1992. The certified copy of the application will be transmitted on April 22, 1992.

Technical Discussion

Status of NOD Response

WHC distributed copies of the draft NOD response table (refer to Attachment 5). RL has previously transmitted it to EPA and Ecology.

Air Emissions

A document was discussed on the notification of modifications on air emissions which was previously transmitted by RL to EPA and Ecology. At EPA's request, it was agreed to include inorganic-chemical analyses for the wipe samples to establish background levels (Refer to Attachment 6).

Process Flow Diagram

WHC distributed handouts of, and conducted a discussion on, the following:

- Draft process flow diagram of the pilot plant (refer to Attachment 7).
- List of proposed critical parameters for the pilot plant, and the proposed selection criteria for these parameters (refer to Attachment 8).
- Table of proposed controls of these proposed critical parameters (refer to Attachment 8).

WHC added that the proposed air-monitoring system has been improved so that a drum of activated charcoal will have a backup drum with an air sampler/alarm between the two drums. Because of this measure, RL proposed an initial test period to analyze for volatile organics in the "B" tanker; if results are favorable, routine VOC analyses may be eliminated.

This was followed by detailed discussion on the following issues:

- Spiking will be largely limited to selected organic parameters found in the process condensate. There were concerns about adverse impacts on carbon when spiking metal parameters.

- Sampling of the tanker before it is moved and unloaded.

Inspection Strategy

WHC distributed handouts of, and conducted a discussion on, the Waste Water Pilot Plant Inspection Strategy (refer to Attachments 9 and 10):

- Proposed inspection strategy for the pilot plant.

- Proposed list of items to be inspected on a daily basis.

- Proposed list of items to be inspected on a monthly basis.

EPA suggested determining the feasibility of developing the inspection lists into checklists for corrective action.

RL provided the attendees with a copy of page 8-4 from the Waste Water Pilot Plant RD&D permit application (revised), which is included as Attachment 11. Also provided to the attendees by RL was the notification of modification to the 1706-KE Laboratory to the Washington Department of Health (A.W. Conklin) by RL (R.D. Izatt), which is included as Attachment 12.

Next RD & D Meeting

The time and place of the next meeting will be announced.

Attachment 2

C-018 RD & D Permit Meeting
February 6, 1992

Attendance List

NAME	ORGANIZATION	PHONE #
R. Bowman	WHC	(509) 376-4876
C. Clark	RL	(509) 376-9333
D. Duncan	EPA	(509) 553-6693
D. Flyckt	WHC	(509) 373-3985
C. Haass	SWEC	(509) 376-5995
J. King	SWEC	(509) 376-4726
C. Massimino	EPA	(206) 553-4153
B. Owen	WHC	(509) 373-4967
B. Pavlina	WHC	(509) 376-9131
S. Price	WHC	(509) 376-1653
D. Scully	WHC	(509) 373-5858
S. Skurla	WHC	(509) 376-7957

9 2 1 2 5 7 9 2 0 5 9

Attachment 3

Unit Managers Meeting: RD & D Permit

1200 Sixth Avenue, Room 12C
Seattle, Washington
February 6, 1992
10:00 am - 2:00 pm

AGENDA

- Status of NOD Response
- Technical Discussion
- Schedule for Permit Completion
- Set Next Meeting Date

9 2 1 2 5 7 9 2 0 6 0

SCHEDULE FOR COMPLETION

WASTE WATER PILOT PLANT RD&D PERMIT APPLICATION

Projected Date	Activity
02/06/92 - 03/20/92	Provide proposed revised text with deliverables to include: Building emergency plans Process flow diagram Operating envelope Secondary containment Chemical balances Critical parameters Loading/unloading area secondary containment Inspection and preventive maintenance plans LERF process flow diagram
04/08/92 -	Transmit completed draft to EPA and Ecology
04/22/92 -	Transmittal of certified copy to EPA and Ecology
06/16/92 -	Completion of EPA review and prepare permit (8 weeks)
08/01/92 -	Completion of public comment period (6 weeks)
08/01/92 -	EPA responds to comments and issues permit (4 weeks)
09/01/92 -	30 day waiting period
10/01/92 -	Permit effective date

Attachment 5

9 2 1 2 7 9 2 0 2

WASTE WATER PILOT PLANT RESEARCH, DEVELOPMENT, AND DEMONSTRATION PERMIT APPLICATION
NOTICE-OF-DEFICIENCY RESPONSE TABLE
APRIL 1992

DRAFT

No.	Comment/Response	EPA Concurrence

A. DESIGN AND OPERATION OF FACILITY: SECTION 1.0: 40 CFR § 264

1. Introduction: 40 CFR § 264.31

The implication is made that only the 242-A evaporator condensate will be treated in this waste water treatment facility. The introduction must include all waste waters that will be treated at this facility.

DOE-RL/WHC Response: The permit application will be modified to delete references to all waste water streams except the 242-A Evaporator process condensate. If other waste streams are to be treated, a description of the additional waste water streams will be added to the permit application.

2. The waste codes in this section indicate that only F003 and F005 as well as WT02 designate the waste. This should be clarified to apply only to the 242-A Evaporator waste stream. The designation of the other waste streams should also be discussed in this section.

DOE-RL/WHC Response: The permit application will be modified to deleted the discussion of waste water streams other than the 242-A Evaporator process condensate.

B. DEMONSTRATION PLAN: SECTION 2.0: 40 CFR § 270.65

1. Test Procedures/Plans: 40 CFR § 270.65

The frequency of submittal of the Test Procedures and the Test Plans/Reports should be clarified in Section 2.1.1 and 2.1.2. These plans and reports are to be submitted to EPA and Ecology for review. There is no schedule for detailed test plans and when they will be available for EPA and Ecology review. The Test Reports should be submitted on a <u>quarterly basis</u>. The outline provided of the test plan report must be expanded to assure that sufficient information will be provided with these reports to at a minimum document the following:

a. Treatment efficiency achieved

b. Calculations/evaluations performed to determine the treatment efficiency

c. Sampling and analytical methods and QA/QC procedures followed for the testing, including identification and discussion of any deviations from the established methods.

WASTE WATER PILOT PLANT RESEARCH, DEVELOPMENT, AND DEMONSTRATION PERMIT APPLICATION
NOTICE-OF-DEFICIENCY RESPONSE TABLE
APRIL 1992

No.	Comment/Response	EPA Concurrence

DRAFT

d. Complete QA/QC report of all analysis, including raw data sheets.

e. Copies of monitoring log/records of critical operating parameters.

f. Copies of records documenting instrument calibration.

DOE-RL/WHC Response: A statement was added to the permit application to require submittal of quarterly reports that include test plans and reports to the EPA for review. The text of the permit application will be modified to include the items detailed in Comment B.1 a through f.

2. Treatment Technologies: 40 CFR § 270.65

Table 2-1 on Treatment Technologies should be clarified. All technologies whether primary or secondary or tertiary should be specified as treatment technologies which will be included in this RD&D Permit. If additional technologies or testing locations, other than at the 1706-KE Building or at the LERF, are required at a later date this will require an additional RD&D Permit or at a minimum a Class 3 permit modification to include them. Therefore all technologies, testing locations, and applicable information should be included in the RD&D permit application prior to EPA issuance. Additional technologies unless specifically identified in the RD&D Permit will not be allowed to be developed or demonstrated. All technologies identified must be addressed in Section 4.0, including at a minimum the type of information (e.g., equipment description, critical parameters and safety features, piping and instrumentation diagram) and level of detail provided for the technologies currently identified in Section 4.0. If it is likely that DOE may want to include UV system(s) which incorporate ozone into the treatment scheme, DOE needs to address this in Section 4.0, as this addition to the treatment scheme would result in significant additional critical operating parameters and equipment.

DOE-RL/DOE Response: Because sufficient detail is not available on the secondary technologies, the secondary technologies will be deleted from the permit application. The permit application will include testing at the 1706-KE Building and the LERF only. The permit application will be modified to include additional technologies or test locations. Text will be added to Section 4.0 to include safety features, critical parameters, and the additional information requested. The inclusion of ultraviolet treatment units using an ozone process is not planned at this time.

WASTE WATER PILOT PLANT RESEARCH, DEVELOPMENT, AND DEMONSTRATION PERMIT APPLICATION
NOTICE-OF-DEFICIENCY RESPONSE TABLE
APRIL 1992

DRAFT

No.	Comment/Response	EPA Concurrence

C. GENERAL WASTE ANALYSIS: SECTION 3.0: 40 CFR § 264

1. Off-site Waste: 40 CFR §§ 264.13(a)(4) and (b)(5)

There is no mention of off-site wastes. If no off-site wastes are to be treated this should be stated in Section 3.1.1 Description of Waste Streams.

DOE-RL/WHC Response: A statement was included in Section 3.1.1 to clarify that no offsite waste will be accepted at the waste water pilot plant.

2. Operating Envelope: 40 CFR § 264.13(b)(1)

Table 3-1 The Operating Envelope should address all critical parameters. This should address all systems including the carbon/activated charcoal filter and the HEPA filter identifying the other constituents which may utilize filter capacity. Each technology train (i.e., including the intermediate storage tanks, test equipment, and tank trailer loading and unloading system) should be comprehensively evaluated to identify constituents which could be present in the air stream from these technology trains into the filters which either utilize capacity in the carbon/activated charcoal filter or the HEPA filters, or constituents which could effectively make apparent capacity in the filters unavailable for use (e.g., moisture, particulates). Simply designating on page 4-5 that ambient air will be bled into the system ahead of the charcoal filter to prevent plugging by moisture does not adequately address the concern for potential plugging by moisture. Specifics on the rate of introduction of ambient air, expected maximum saturation levels of ambient air, expected moisture levels from air stream from waste processes, and calculations to interrelate this information to document that plugging will not occur needs to be included in the application.

The presentation of the Operating Envelope should include a discussion of all the critical operating parameters (e.g., temperature, pressure, corrosion) and to the extent applicable, tie these parameters back to waste physical and/or chemical properties (e.g., pH, volatility, etc.) or at a minimum if not applicable to physical and/or chemical properties to tie these parameters back to the operating controls on Table 4-3, with an extensive discussion of basis for the nonapplicability.

DOE-RL/WHC Response:

WASTE WATER PILOT PLANT RESEARCH, DEVELOPMENT, AND DEMONSTRATION PERMIT APPLICATION
NOTICE-OF-DEFICIENCY RESPONSE TABLE
APRIL 1992

DRAFT

No.	Comment/Response	EPA Concurrence

3. Analytical Methods: 40 CFR § 264.13(b)(2)

Table 3-2: Waste Analysis Plan Analytical Methods: This table should also identify the preparation methods and extraction methods for the waste water streams that will be treated in the waste water treatment plant.

DOE-RL/WHC Response: Table 3-2 will be modified to more clearly define the preparation and extraction methods that will be used in waste water pilot plant analyses.

4. Methods to Sample Wastes: 40 CFR § 264.13(b)(3)

Tables 3-2 and 3-3 should specify the radionuclide Hanford Site "onsite" methods listed.

DOE-RL/WHC Response: A description of the Hanford Site radionuclide analysis will be included as an appendix in the permit application. Table 3-2 and 3-3 will be modified to include the names of the analytical methods described in the appendix. Treatment of the radioactive portion of the waste is not within the scope of the permit application. The information is provided for general knowledge.

D. SECTION 4.0 PROCESS INFORMATION: 40 CFR §§ 264.13(b)(6) and 270.65

1. Waste Characterization: 40 CFR § 264.13(b)(6)

This section must address the waste codes for the other waste streams identified in Section 1.0 Introduction.

DOE-RL/WHC Response:

2. Critical Parameters: 40 CFR § 270.65

a. Figures 4-1 through 4-19 should include both the range of the specific parameter being measured (e.g., temperature, pressure, etc.) and the set point/range which is established for that parameter. In addition, the pH limitation of the specific unit should be identified (i.e., the specific limit which would be unsafe should be specified). The Table 2-1 needs to be tied into this Section regarding primary and secondary technologies.

DOE-RL/WHC Response:

WASTE WATER PILOT PLANT RESEARCH, DEVELOPMENT, AND DEMONSTRATION PERMIT APPLICATION
NOTICE-OF-DEFICIENCY RESPONSE TABLE
APRIL 1992

DRAFT

No.	Comment/Response	EPA Concurrence

b. Information documenting the adequacy of HEPA filter system for each technology train (i.e., including the intermediate storage tanks, test equipment, and tank trailer loading and unloading system) needs to be included in the application. The information documenting the adequacy of the activated charcoal/carbon filtration system must be expanded to address each technology train (i.e., including the intermediate storage tanks, test equipment, and tank trailer loading and unloading system) and other contaminants which may use up adsorptive capacity as designated in comment 2, under Section C, and must include an evaluation of worst case compound(s), with respect to adsorption efficiency (e.g., compounds with low carbon/activated charcoal adsorption efficiency such as vinyl chloride, methylene chloride, etc.) in any waste feed to be handled during the RD&D, not just the 242-A evaporator condensate. These worst case compound(s) need to be included under the operating envelope. A surrogate monitoring approach should be included for monitoring premature plugging of the carbon/activated charcoal filter system (e.g., pressure across the system).

DOE-RL/WHC Response:

c. Under the Critical Parameters and Safety Features subsection for technologies addressed under Section 4.0, a backup to the check-valves used for preventing introduction of water into the acid feed tank and hydrogen peroxide lines should be provided.

DOE-RL/WHC Response:

WASTE WATER PILOT PLANT RESEARCH, DEVELOPMENT, AND DEMONSTRATION PERMIT APPLICATION
NOTICE-OF-DEFICIENCY RESPONSE TABLE
APRIL 1992

DRAFT

No.	Comment/Response	EPA Concurrence

3. Process Flow Diagrams: 40 CFR § 270.65

The process diagrams should include the monitors of all the critical parameters and instrument legends. These monitors and all alarms/sensors associated with the monitors should be assigned an identification code/number which should be referred to on Table 4-3. Tables 4-3 and 4-4 must also address the critical parameters for operation of the tank trailer load/unload system and the intermediate storage tanks. In addition the calibration of this equipment to the manufacturer's specifications should also be addressed. A calibration log should also be maintained at the facility. The monitor specifications on Table 4-4 must indicate in all cases the extent of full scale/full range so that it may be correlated with the acceptable levels/ranges specified on Table 4-3.

DOE-RL/WHC Response:

4. Spill Prevention and Containment: 40 CFR § 270.65

The catch pan footprint needs to address the spray potential of ruptured treatment units under pressure. The basis for the extent for the catch pan footprint needs to be provided. The footprint for the catch pans designated on page 4-3 (i.e., 1 foot greater in each horizontal dimension than the footprint of the equipment), is inconsistent with the length specified on Table 4-1 for the reverse osmosis unit (i.e., .5 foot greater). The RD&D application must document how the secondary containment system will address equipment which is ancillary to the primary test equipment such as pumps, valves, etc. The RD&D application needs to provide details on how the secondary containment and leak detection requirements of Section 264.193, referred to on page 4-23, are being met for the trailer (e.g., materials of construction for the berms, compatibility of containment construction materials with wastes, adequacy of constructed containment to withstand expected loading, etc.).

DOE-RL/WHC Response:

WASTE WATER PILOT PLANT RESEARCH, DEVELOPMENT, AND DEMONSTRATION PERMIT APPLICATION
NOTICE-OF-DEFICIENCY RESPONSE TABLE
APRIL 1992

DRAFT

No.	Comment/Response	EPA Concurrence

E. GENERAL INSPECTION REQUIREMENTS: SECTION 5.0 40 CFR § 264.15

1. Inspection Schedule: 40 CFR § 264.15(b)

   The schedules for inspecting monitoring equipment, safety, and emergency equipment, security devices, and operating and structural equipment that are vital to prevent, detect, correspond to environmental or human health hazards must be included in the permit application.

   DOE-RL/WHC Response:

2. Items to be Inspected: 40 CFR § 264.15(b)(1)

   This section must address the specific inspections which will be conducted on each item of operational equipment and address the maintenance, repair and replacement of equipment. The inspection should be conducted in accordance with and specify the manufacturer's specification. The details of the type of readout/records (e.g., strip charts) to be collected and maintained in the operating record for the critical parameter monitoring equipment and the frequency of their collection must also be provided.

   DOE-RL/WHC Response:

3. Types of problems for which each item is inspected: 40 CFR § 264.15(b)(3)

   a. Inspection checklists must be included in the RD&D Permit Application.

   b. A Preventative Maintenance Plan should be included in the RD&D Permit Application.

   c. This Operational Readiness Review must be submitted after completion to EPA and Ecology to determine if the RD&D Permit needs to be updated/changed prior to issuance.

   DOE-RL/WHC Response:

WASTE WATER PILOT PLANT RESEARCH, DEVELOPMENT, AND DEMONSTRATION PERMIT APPLICATION
NOTICE-OF-DEFICIENCY RESPONSE TABLE
APRIL 1992

No.	Comment/Response	EPA Concurrence
4.	Inspection Frequency: 40 CFR § 264.15(b)(4) The inspection frequency must be specified in the permit application for the inspection checklist. **DOE-RL/WHC Response:**	
F.	CONTINGENCY PLAN: SECTION 6.0: 40 CFR §§ 264.14(b), 264	
1.	Implementation of Plan: 40 CFR § 264.51 The contingency plan must stand on its own, no references to other portions of the permit application or other documents for information may be made unless they are separately attached to the contingency plan. **DOE-RL/WHC Response: To include all relevant emergency information, the permit application will include as appendices the contractor's *Emergency Plan*, the *Emergency Plan for the 1706-KE Buildings*, and the *Building Emergency Plan-200 Area Tank Farms*.**	
2.	Contents of Plan: 40 CFR § 264.52 a. The specific information on the waste types, hazards, and chemicals which are present in the Waste Water Treatment Facility 1706-KE Building and the LERF Facility must be included in the contingency plan. b. The specific building emergency plan for the Waste Water Treatment Facility 1706-KE and the LERF, Appendix F, must be specific to waste water treatment operations, addressing the actual waste types to be handled, specific types of emergencies which may occur (e.g., chemical reaction from water entering acid tanks, vessel rupture due to overpressure, etc.) and the types of emergency equipment on hand including decontamination solutions etc., specific shutdown procedures, identifying personnel protection equipment needed for the various potential waste water treatment technology demonstrations, and specific steps and materials for clean-up of emergency equipment. **DOE-RL/WHC Response:**	

WASTE WATER PILOT PLANT RESEARCH, DEVELOPMENT, AND DEMONSTRATION PERMIT APPLICATION
NOTICE-OF-DEFICIENCY RESPONSE TABLE
APRIL 1992

DRAFT

No.	Comment/Response	EPA Concurrence
3.	Emergency Coordinators: 40 CFR §§ 264.52(d), 264.55 The names as well as the phone #'s of the Waste Water Treatment Facility emergency personnel must be included in the contingency plan. The other personnel must be identified. **DOE-RL/WHC Response: The emergency coordinators, including the building emergency director, are assigned by position. Hanford Facility policy is to include position titles and not individual names.**	
4.	Notification: 40 CFR § 264.56(a) The notification authorities in Section 5.3.2 for 1706KE must be clarified. It is not clear what the specific role of the "HWVP" line management is regarding the RD&D Permit and technology demonstration. The notification authorities, incident assessment, and facility restart notification must include EPA Region 10. **DOE-RL/WHC Response: The text will be modified to read the "1706KE" line management. A sentence will be added to state that the Occurrence Notification Center has the responsibility for notifying the regulators, including the EPA Administrator, Region 10.**	
5.	Evacuation Plan: 40 CFR § 264.52(f) The evacuation routes from the 1706KE Building and the LERF Facility must be identified, as well as the location of the staging areas, in the contingency plan. **DOE-RL/WHC Response:**	

WASTE WATER PILOT PLANT RESEARCH, DEVELOPMENT, AND DEMONSTRATION PERMIT APPLICATION
NOTICE-OF-DEFICIENCY RESPONSE TABLE
APRIL 1992

DRAFT

No.	Comment/Response	EPA Concurrence

G. PERSONNEL TRAINING: SECTION 7.0: 40 CFR § 264.16

1. Program Director: 40 CFR § 264.16(a)(2)

It is not clear that there is a Training Director nor that this individual is properly qualified.

DOE-RL/WHC Response: The text will be modified to more clearly state that the waste water pilot plant manager is responsible for training. The manager will be qualified through training listed in Tables 7-1 and 7-2.

2. Training Program Contents

This section should also indicate that the courses outlined in the Building Training Plan for waste water personnel will be completed within 6 months of assignment. In addition no unqualified personnel will be allowed to operate the waste water treatment facility unless properly qualified.

DOE-RL/WHC Response: A statement incorporating the 6-month requirement and a statement that only qualified personnel will be allowed to operate the pilot plant will be included in Section 7.0.

H. APPENDIX C

Appendix C should include the extraction and preparatory methods which will be used. In addition the specific sampling procedures must also be addressed.

DOE-RL/WHC Response: A listing of preparatory and extraction methods to be used on the samples will be included in Table 3-2. The sampling methods for waste characterization are included in Sections 3.3.1 for tanker sampling and in Section 3.3.2 for sampling at the 242-A Evaporator and the LERF.

Attachment 6

WAC 246-247, RADIATION PROTECTION - AIR EMISSIONS NOTIFICATION OF MODIFICATION FOR THE 1706-KE LABORATORY (C-018H PILOT PLANT)

INTRODUCTION

On September 26, 1991, in a letter, A. W. Conklin, State of Washington, Department of Health (DOH), to E. A. Bracken, Department of Energy, Field Office Richland (RL), guidance was provided regarding information required in a notification of modification, pursuant to WAC 246-247-070, for an "insignificant source". (An insignificant source is defined in the letter as, "one that could result in a committed effective dose equivalent [CEDE] of less than 0.1 mrem dose to the maximally exposed individual [MEI] without controls.") This document serves as a notification, pursuant to the September 26, 1991, guidance, for modification of the 1706-KE building to accommodate pilot plant operations for the C-018H Waste Water Treatment Facility. These operations will provide a CEDE of approximately 0.005 mrem/yr to the MEI (see Section 7.0).

Waste waters have been generated as a result of operations conducted at the Hanford Site for over 40 years. These waste waters typically contain trace levels of radionuclides and stable chemicals. Both organic and inorganic constituents can also be present as either suspended solids or dissolved solids. While there is a wide variety of contamination in the waste waters, the level of contamination is very low. (Characterization of the constituents in Hanford Site waste water streams is provided in the stream specific reports [WHC 1990]).

The sources, and a general description of the Hanford Site waste waters having the potential for being tested in the C-018H Pilot Plant, include the following:

- Non-contact cooling waters - Water from the Columbia River is pumped to the Hanford Site and used as non-contact cooling water. "Non-contact" means that the water routinely does not come in contact with dangerous or mixed waste. After the water passes through the unit, the water is monitored and released as a waste water. This waste water could contain trace levels of radioactivity from residual contamination in the piping system.

- Non-contact steam condensates - Water from the Columbia River is pumped to the Hanford Site, demineralized, and converted to steam. This steam is used for building and process heating within the buildings. After passing through the heat exchangers, the condensed steam is monitored and released as a waste water. This waste water could contain trace levels of radioactive contamination from the piping system.

- Process condensates - Hanford Site operations typically concentrate waste in an evaporator before storage in the DSTs. The process condensate is generated by the condensed overhead vapors from the evaporation of the waste. This category of waste

9 2 1 2 5 7 9 2 0 7 2

includes the 242-A Evaporator process condensate, which is the only waste water currently determined to be a dangerous waste.

- Laundry waste waters - The operation of the Hanford Site requires the use of protective clothing. This protective clothing is washed in an onsite laundry. Waste water resulting from this laundry process typically has high levels of suspended solids and inorganic contaminants. The waste water also contains trace levels of organic and radioactive contamination.

- Laboratory and chemical sewers - Most waste water discharges to the laboratory and chemical sewers have been eliminated. The majority of the remaining waste water typically results from heating and ventilation systems and from systems used to ventilate various process vessels. This waste water typically contains trace levels of radioactive contamination from the building piping systems.

- Groundwater - The remediation of the Hanford Site is anticipated to include projects designed to remove contamination from the groundwater beneath the site and to remove contamination from the soils above the groundwater. These remediation efforts could require waste water pilot plant testing.

The waste waters described above have previously been discharged to unregulated cribs, ponds, or ditches. However, in May of 1989, the U.S. Department of Energy signed the "Hanford Federal Facility Agreement and Consent Order", agreeing to regulation and treatment of these discharges. Therefore, systems are being designed and will be built to treat these waste waters along with any future waste waters resulting from remediation activities on the Hanford Site.

One of the first treatment systems to be constructed will be the 200 Area Waste Water Treatment Facility (Project C-018H). This facility will be designed to treat the process condensate from the 242-A Evaporator and the Plutonium-Uranium Extraction (PUREX) Plant. However, before the treatment system is constructed, the design of the system must be tested to verify that the proposed treatment methods will be effective. This testing will be performed on a small-scale and is termed 'pilot testing'. Specifically, pilot testing will:

- Demonstrate the technical adequacy, economic feasibility, and performance capability of new and innovative treatment technologies

- Tailor existing treatment technologies to site-specific design needs and operating conditions

- Improve the efficiency of treatment processes and refine performance capabilities

- Demonstrate methods to reduce secondary waste resulting from treatment processes
- Demonstrate that treatment systems produce a treated waste water that is nonhazardous
- Provide data to support the preparation of the required environmental permits, delisting petitions, or other regulator approvals
- Provide RL with a level of confidence that the treatment system will operate within the limits established by the environmental permits
- Provide data for full-scale plant design.

A portion of the 1706-KE Building (an existing structure in the 100KE Area) has been selected as the site for most of the testing of these treatment systems. (It is possible that this laboratory will also be used to test treatment systems for other proposed facilities. However, the influent to the C-018H Treatment Facility will provide the bounding source term for any other potential tests.) Figure I-1 depicts the C-018H Pilot Plant floor plan. However, before pilot plant testing can commence, certain minor modifications to the facility HVAC system are necessary. Because pilot plant testing of actual waste will produce emissions to atmosphere of small quantities of radionuclides, approval from the DOH, pursuant to WAC 246-247, "Radiation Protection - Air Emissions", is required prior to commencement of the modifications.

9 2 1 2 5 7 9 2 0 7 4

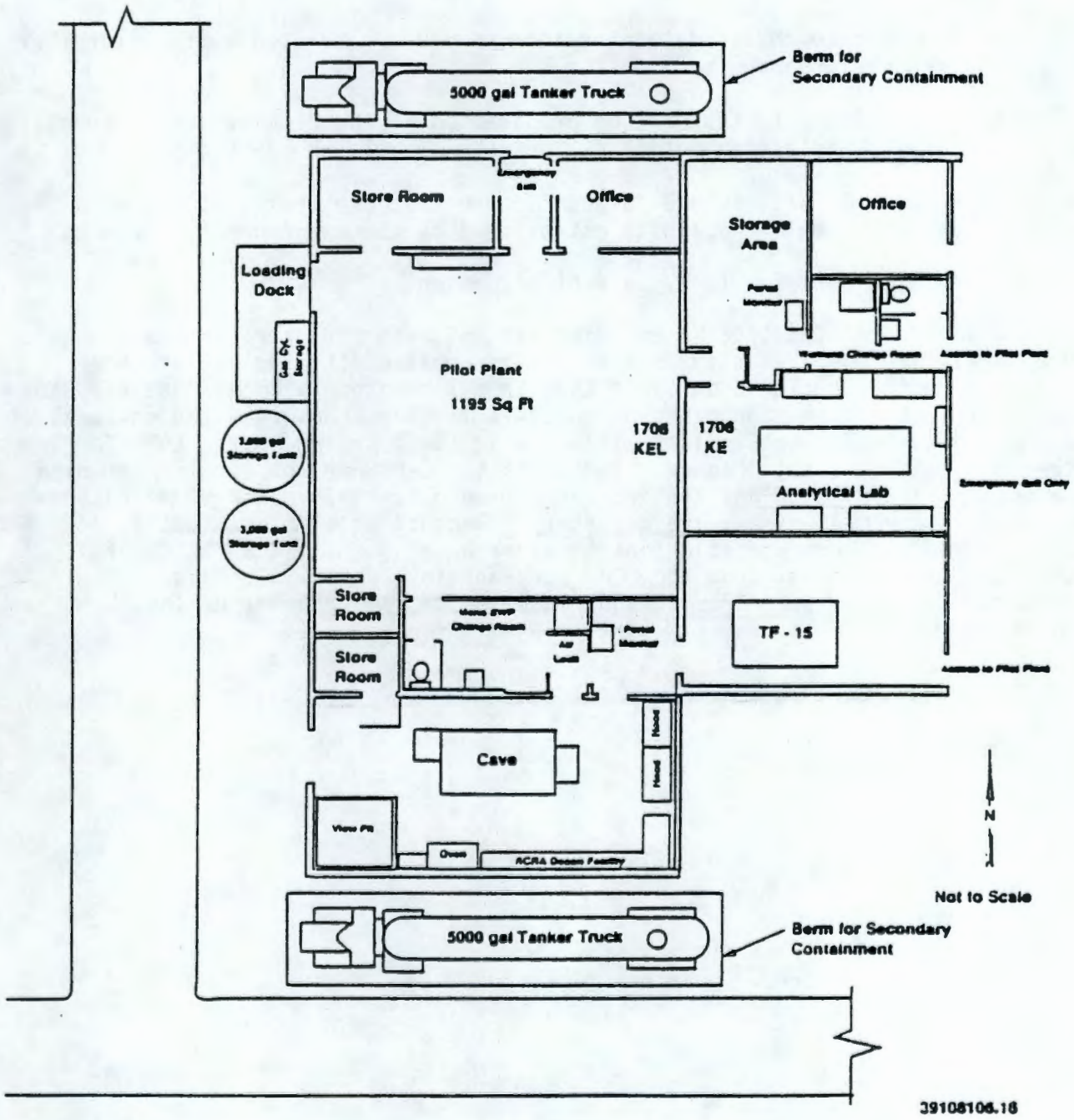

Figure I-1: C-018H Pilot Plant Floor Plan

9 2 1 2 5 7 9 2 0 7 5

1.0 DESCRIBE THE CHEMICAL AND PHYSICAL PROCESSES RELATED TO THE EMISSION UNIT

The following discussion has been organized under treatment technologies. Currently, the technologies to be tested in the C-018H Pilot Plant include the following:

- o pH adjustment
- o Organic removal (e.g., ultraviolet light mediated oxidation and granular activated carbon)
- o Inorganic removal (e.g., reverse osmosis and ion exchange)
- o Secondary waste concentration (e.g., evaporation)
- o Suspended solids removal (e.g., filtration).

Figure 1-1 is an overall process flow diagram for the pilot plant.

1.1 pH Adjustment

A pH adjustment step is required in many waste water treatment systems. This step is usually required to change the waste water chemistry, to enhance the removal or recovery of desired contaminants by downstream process equipment, or to adjust the waste water pH to meet regulatory discharge limits.

Adjusting the process stream pH requires an automatic system for adding either an acidic or basic reagent in the precise amount required to change the solution pH so the pH falls within a desired range. This is accomplished either in batches in large feed makeup tanks or inline using two or more relatively small tanks that are well agitated. For example, the pH of the waste water from the Liquid Effluent Retention Facility (LERF) will be above 10 and must be lowered to approximately 4 to 7 before the ultraviolet oxidation step. (The LERF will store process condensate from the 242-A Evaporator and PUREX.) A continuous inline system will be used for adjusting the pH of the waste water stream. The pH adjustment flow diagram is shown in Figure 1-2.

The pH adjustment system will consist of either two or three 50-gallon (189.3-liter) stainless steel tanks, in series. Each tank will be covered, vented to the building ventilation system, have a pH probe, and a mixer to thoroughly mix the acid. The first and second tanks for a two-stage control tank will have control instruments that will automatically adjust the feed rate from an acid or base metering pump. The third tank and pH analyzer will provide an "average" pH measurement, because under some circumstances, the indicated pH in the control tanks could be fluctuating considerably. The pH of the waste water can be raised by using a base such as caustic (sodium hydroxide) and lowered by using an acid (sulfuric acid).

9 2 1 2 5 7 9 2 0 7 6

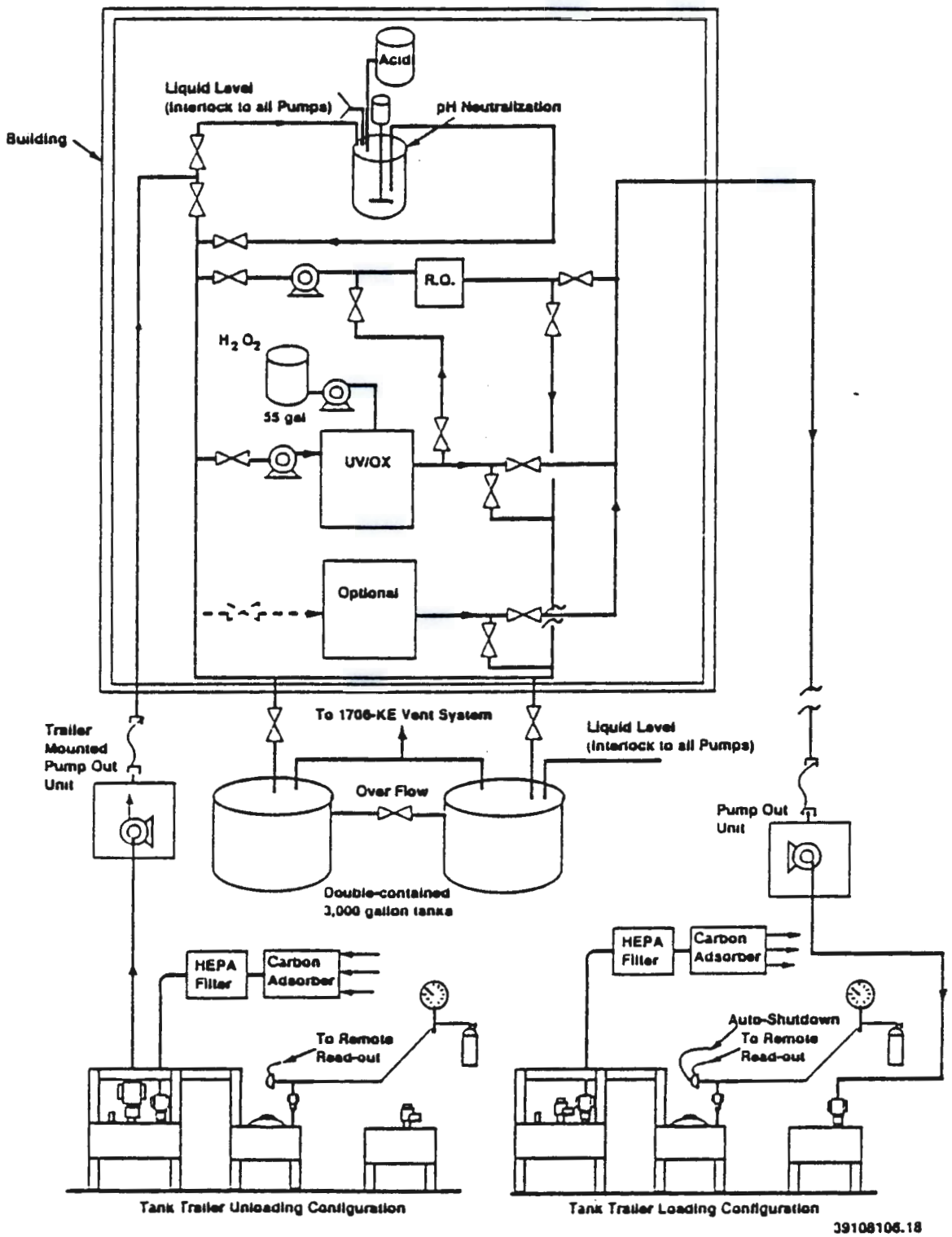

Figure 1-1: Overall Process Flow Diagram

The acid or base will be metered from a separate tank using a metering pump. The pump and tank will be designed to be compatible with the chemical. The concentration of sulfuric acid to be used for pH adjustment could range from 20 percent to 98 percent. The sodium hydroxide concentration could range from 5 percent to 50 percent. If lower concentrations of the acid or base are used, a larger metered volume of acid or base is required, simplifying the pH control. Usually the more dilute the waste water stream, the less acid or base is required for pH adjustment. A typical flow rate of acid or base could range from 0.68 to 3.4 ounces (20 to 100 milliliters) per minute for the 5 gallons (18.9 liter) per minute waste water pilot plant.

1.2 Organic Removal

Organic compounds can be destroyed by using ultraviolet oxidation to convert organics to carbon dioxide and water. When an oxidant, such as hydrogen peroxide or ozone, is acted upon by ultraviolet light, a hydroxyl radical is formed that is a very reactive oxidant. This hydroxyl radical is used to oxidize the organics. The degree of organic oxidation depends on the residence time of the waste water in the ultraviolet reactor, the concentration of oxidant, and the intensity of the ultraviolet light source. The ultraviolet oxidation piping and instrumentation diagram is presented in Figure 1-3.

The oxidation unit has a reactor volume of approximately 30 gallons (114 liters) and is equipped with six ultraviolet lamps rated for 5 kilowatts each. The lamps are mercury vapor lamps, and are considered high intensity. A quartz sheath protects the lamps from the waste water solution. The six lamps have individual switches so any number of lamps can be activated at any one time. The reactor outlet acts as the vessel vent when filling the equipment. Any gas generation during operation will be swept out the outlet piping of the unit to a vented storage tank. The equipment can be operated in a once-through mode or in a recycle mode.

1.3 Inorganic Removal

Reverse osmosis and ion exchange are the two types of inorganic removal discussed in the following sections. Both processes will remove radionuclides from the waste stream. Granular activated carbon requires similar equipment to ion exchange and is, therefore, discussed with ion exchange.

1.3.1 Inorganic Removal-Reverse Osmosis

A flow schematic and piping and instrumentation diagram of the reverse osmosis system is presented in Figure 1-4.

Reverse osmosis is a technology that employs pressure to effect a separation of a solute (contaminants) and a solvent (water). The pressure applied must be great enough to overcome the natural osmotic pressure of the solution. The solution is passed over the surface of a semi-permeable

9 2 1 2 5 7 9 2 0 7 8

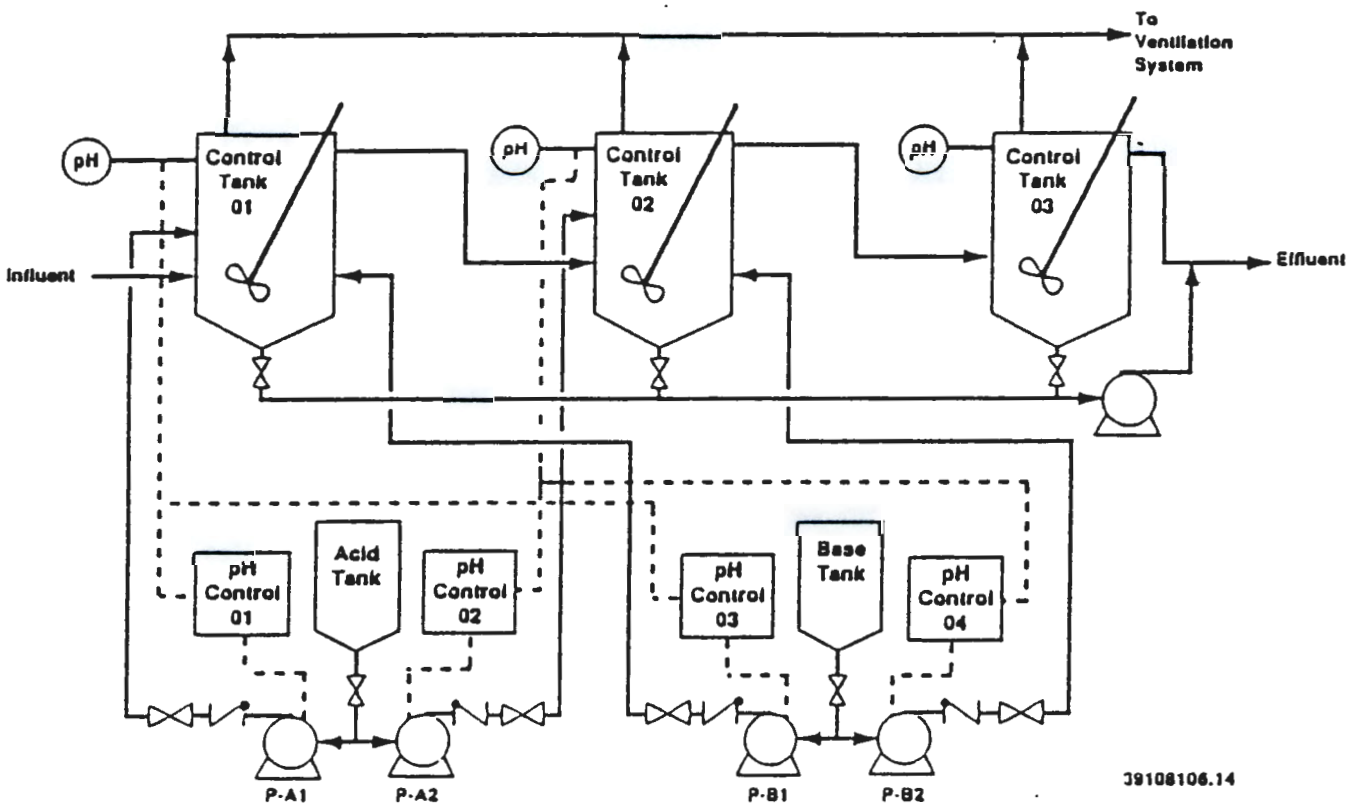

Figure 1-2: pH Flow Diagram

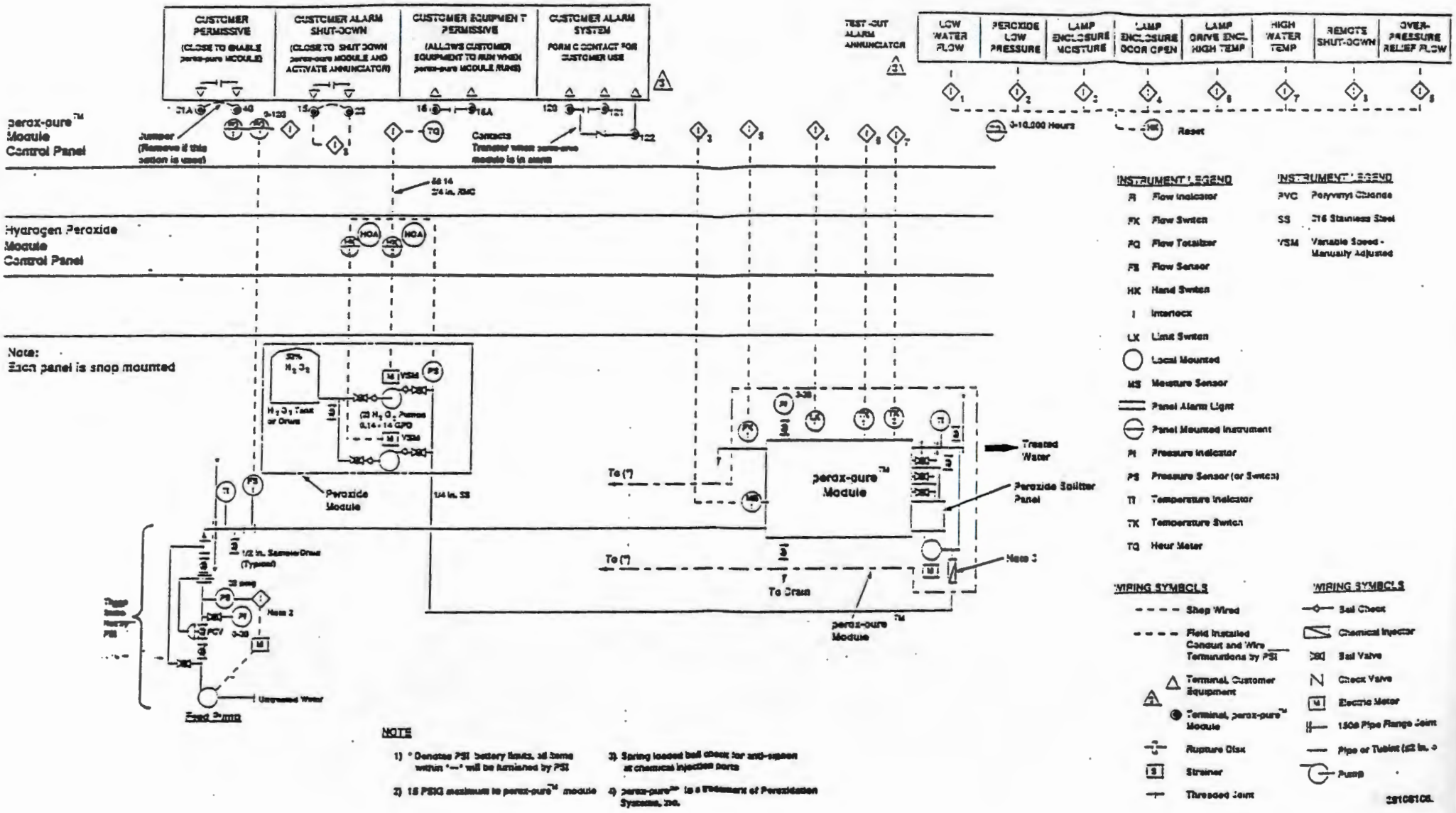

Figure 1-3: Ultraviolet Oxidation Piping and Instrumentation Diagram

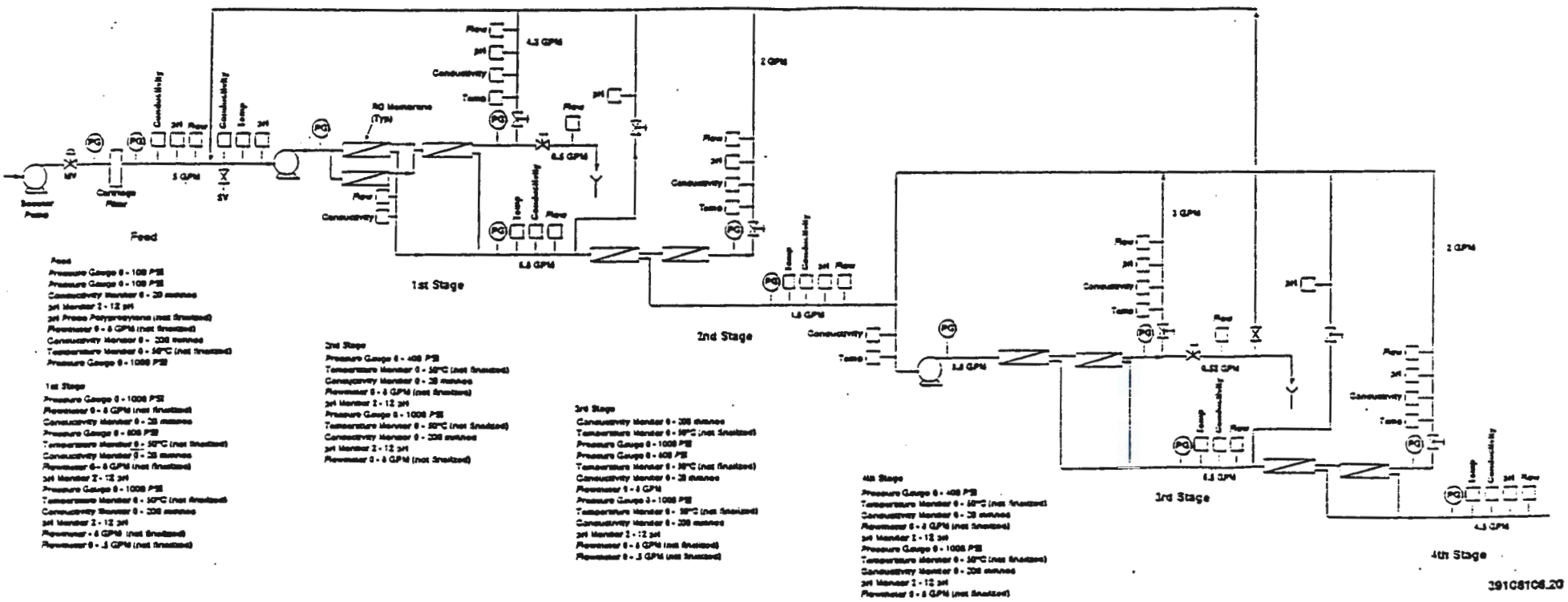

Figure 1-4: Reverse Osmosis Piping and Instrumentation Diagram

membrane, with an applied pressure of between 100 to 700 pounds per square inch.

The membrane pore size, composition, surface charge, and thickness, permit the water molecules to preferentially diffuse through the membrane while retaining the contaminant molecules (principally inorganics) in a concentrated waste solution. This concentrated waste solution, which does not pass through the membrane, is called the retentate or concentrate stream, and the portion that passes through the membrane is called the permeate stream. The retentate stream can be processed through several membranes in series to recover more of the waste water as permeate. Likewise, the permeate can be processed through several membranes to increase permeate purity.

The retentate from each stage is recycled back to a preceding stage. This recycle increases the velocity over the membranes and minimizes the retentate volume. The system is designed to provide flexibility on how much retentate is recycled and to where it is fed. A portion of the retentate from stages 1, 2, and 3 can be returned to the influent of stage 1. The retentate from stage 4 is returned to the influent of stage 3 along with a portion of stage 3 retentate. Retentate can be discharged from stages 1 and 3 and treated as secondary waste. This concentrated secondary waste will be used for additional evaporation studies to further concentrate the secondary waste. The high velocity resulting from recycling the retentate will help to minimize fouling by sweeping away precipitate or biological material off the membrane surface. This increases the membrane surface area available for pure water to pass through.

The reverse osmosis unit contains approximately 50 gallons (189 liters). No gases will be generated during reverse osmosis operation.

1.3.2 Ion Exchange and Granular Activated Carbon

Ion exchange and granular activated carbon will be considered together because the required test equipment and the critical parameters are very similar. The ion exchange and granular activated carbon processes act to concentrate the contaminants on the ion exchange or granular activated carbon media. The ion exchange resin and granular activated carbon can be used for polishing of the waste water. The granular activated carbon also can be used as an initial organic removal step.

The ion exchange process involves removing dissolved solids, including radionuclides, as ionic species from the waste water and binding the ions to a ion exchange media. The resin is usually in the form of small beads. The ion exchange resin is placed in a large vessel and the assemblies are called ion exchange beds. There could be several ion exchange beds placed in parallel or in series depending on the application. A flow distribution system within the ion exchange bed produces uniform waste water flow through the adsorption media. Uniform flow through an ion exchange bed is important to uniformly deplete the ion exchange resin to provide efficient use of the ion exchange resin capacity. The ion exchange bed can be regenerated to return the ion exchange resin to a state where the ion exchange again will remove

9 2 1 2 5 7 9 2 0 8 2

contaminants. Regeneration of ion exchange resin is performed by using either an acid or base, depending on the resin, and passing the acid or base through the ion exchange resin bed. The concentrated contaminants are removed into the regeneration solution. This regeneration solution is handled as a secondary waste.

Granular activated carbon is used primarily to remove organic contaminants from water. The organic species are adsorbed physically and retained on the granular carbon particle. The method of handling and using the granular activated carbon is very similar to ion exchange resins, except granular activated carbon is regenerated in a different manner.

The ion exchange and granular activated carbon equipment is in the very early stages of conceptual design. The primary difference between the ion exchange and granular activated carbon equipment will be the possible use of a regeneration system for the ion exchange resin. No granular activated carbon regeneration testing is planned. Testing involving ion exchange and granular activated carbon will be performed as a side stream operation to reduce the equipment size and duration of testing. Figure 1-5 presents a schematic drawing for the ion exchange and granular activated carbon systems.

9 2 1 2 5 7 9 2 0 8 3

1.4 Suspended Solids Removal

The purpose of testing filtration is to identify a filter, or filters, that can successfully remove the suspended solids (grit, colloids, biological growth, radionuclides, etc.) from waste water. The removal of these solids is essential for the protection of the downstream treatment systems and for the removal of other contaminants (e.g., organics, inorganics). A successful filter will be identified as one that is capable of maintaining a design flow rate with a minimum generation of secondary waste and fouling. The filtration technology investigated will consist of cartridge, microfiltration, and ultrafiltration. These technologies are very similar with the only difference being the particle size removed.

The filtration operation can be enhanced through use of a pretreatment step. The pretreatment can include pH adjustment or coagulation and flocculation. The coagulation and flocculation steps can be used with pH adjustment. Coagulation and flocculation involves the addition of an iron, alumina, or magnesium compound that will form a precipitate at a pH usually greater than 8. This precipitate enhances removal of heavy metals. The precipitate can be removed by using a filter with a precoat, or a clarifier. The precipitate can be dewatered using a filter press.

1.5 Storage Tanks

The C-018H Pilot Plant will have two double-shell 3,000-gallon (11,000-liter) interim storage tanks that will be capable of storing the waste water between tests on different treatment technologies or as feed material. These two storage tanks will be placed outside the C-018H Pilot Plant and will be plumbed to provide 6,000 gallons (22,700 liters) of storage. The inner shell of these tanks will be of stainless steel construction with outer shells

9 2 1 2 5 7 9 2 0 8 4

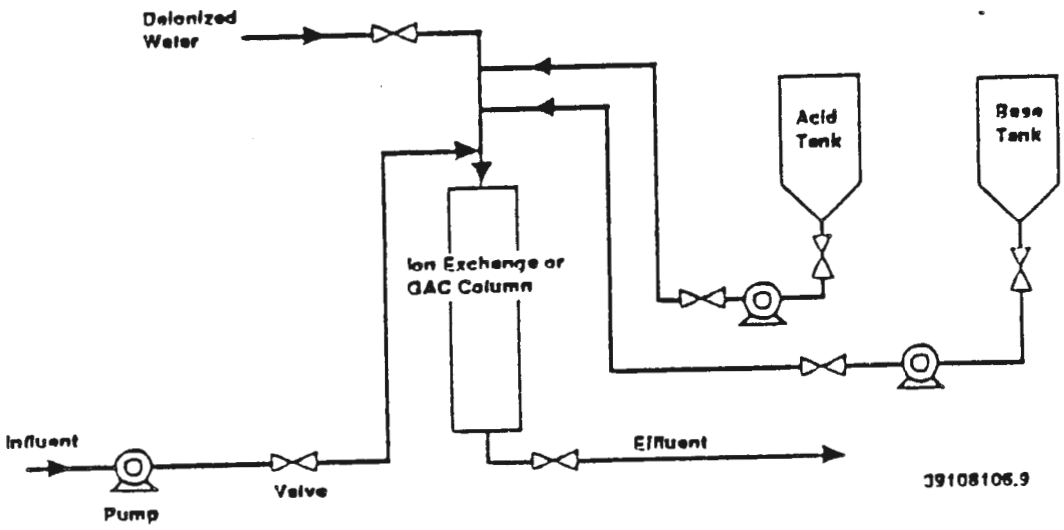

Figure 1-5: Schematic of the Ion Exchange and Granular Activated Carbon Systems

of carbon steel. Both tanks will be vented to the C-018H Pilot Plant ventilation system.

2.0 DESCRIBE THE SOURCE TERM. DESCRIBE THE PHYSICAL FORM OF EACH RADIONUCLIDE USED (OR CREATED) DURING THE PROCESS

The following characterization data (WHC 1990), Table 2-1, is specific to effluent from the LERF. The LERF will provide the radioactively contaminated effluent to be processed through the C-018H Pilot Plant and, hence, the source term.

To obtain curies per year for each radionuclide, the proposed annual feed to the C-018H Pilot Plant of 500,000 gallons was converted to 1,892,720.6 liters and multiplied by the number of pico curies per liter. (The use of 500,000 gallons/year represents a plant specific maximum capacity and, thus, a very conservative estimate. The actual feed from the LERF is expected to be closer to 200,000 gallons/year.)

Table 2-1. C-018H Pilot Plant Annual Source Term (Annual Effluent Throughput)

Radionuclide	(pCi/L)	Ci/yr
Alpha	220,000	4.20 E-01
Beta	490,000	9.30 E-01
Sr-90	19,000	3.60 E-02
Ru-106	280,000	5.30 E-01
Ru-106 (oxide)	0.280	5.30 E-07
Ru-103	63,000	1.19 E-01
Ru-103 (oxide)	0.063	1.19 E-07
Cs-134	0.009	1.70 E-08
Cs-137	88,000	1.67 E-01
Pm-147	37,000	7.00 E-02
Uranium (gross)	160	3.02 E-04
H-3	68,000,000	1.29 E+02
Am-241	12,000	2.27 E-02
I-129 (elemental)	741	1.40 E-03
I-129 (methyl iodide)	39	7.38 E-05
Pu-238	2,200	4.16 E-03
Pu-241	190,000	3.60 E-01
Pu-239	19,000	3.60 E-02
Sn-113	34,000	6.43 E-02
Eu-155	1,400	2.65 E-03

3.0 PROVIDE DRAWINGS OF THE EMISSION UNIT FROM POINT OF ORIGIN OF THE SOURCE TO EMISSION TO THE ENVIRONMENT

There are two independent ventilation systems serving the 1706-KE building. Figure 3-1 is a simplified one line diagram showing which ventilation system serves which sections of the 1706-KE building. Figures 3-2 and 3-3 provide a more detailed view of the individual ventilation systems.

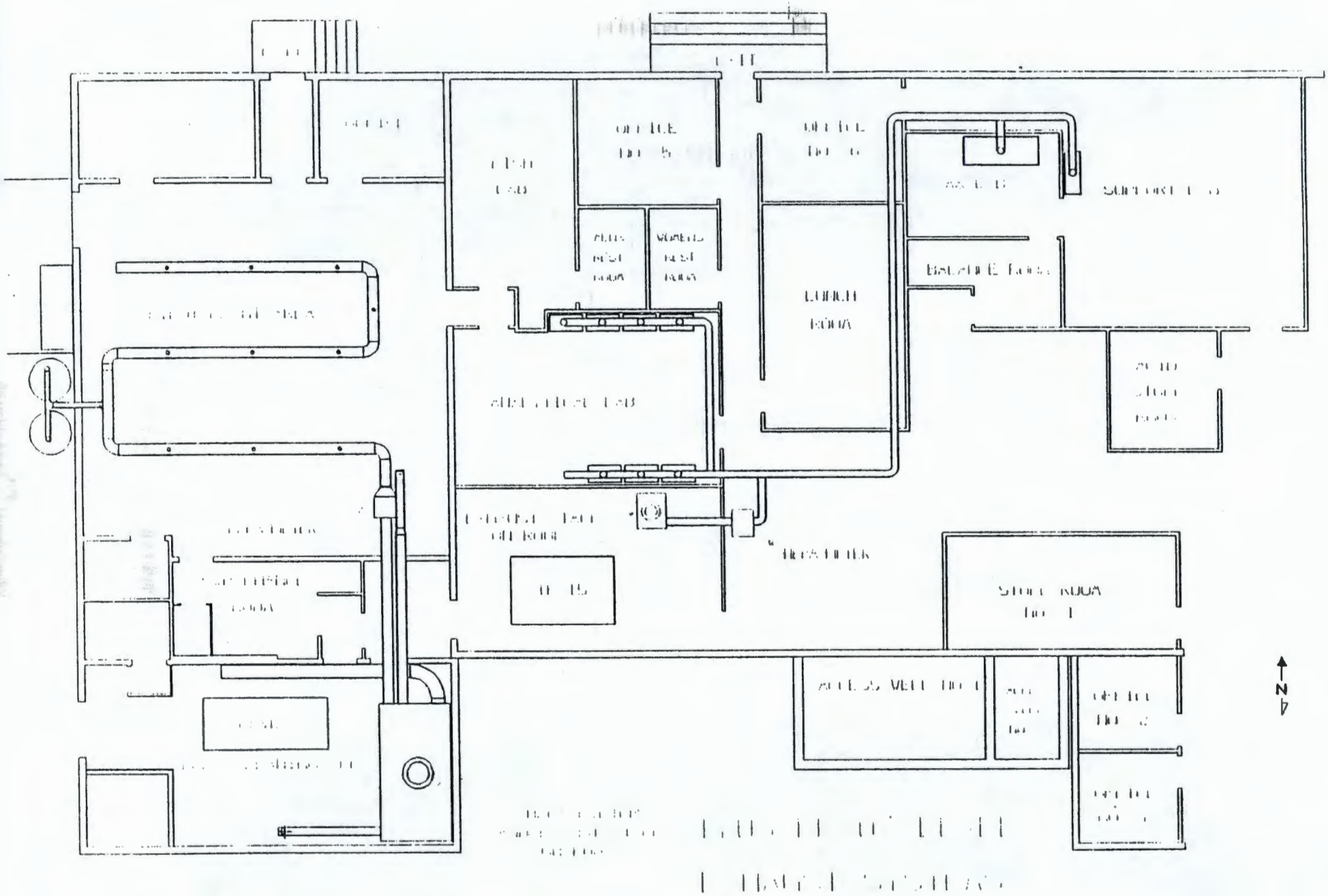

ANALYTICAL LABORATORY EXHAUST

PILOT PLANT EXHAUST

Figure 3-1: Simplified One Line Diagram of 1706-KE Ventilation System

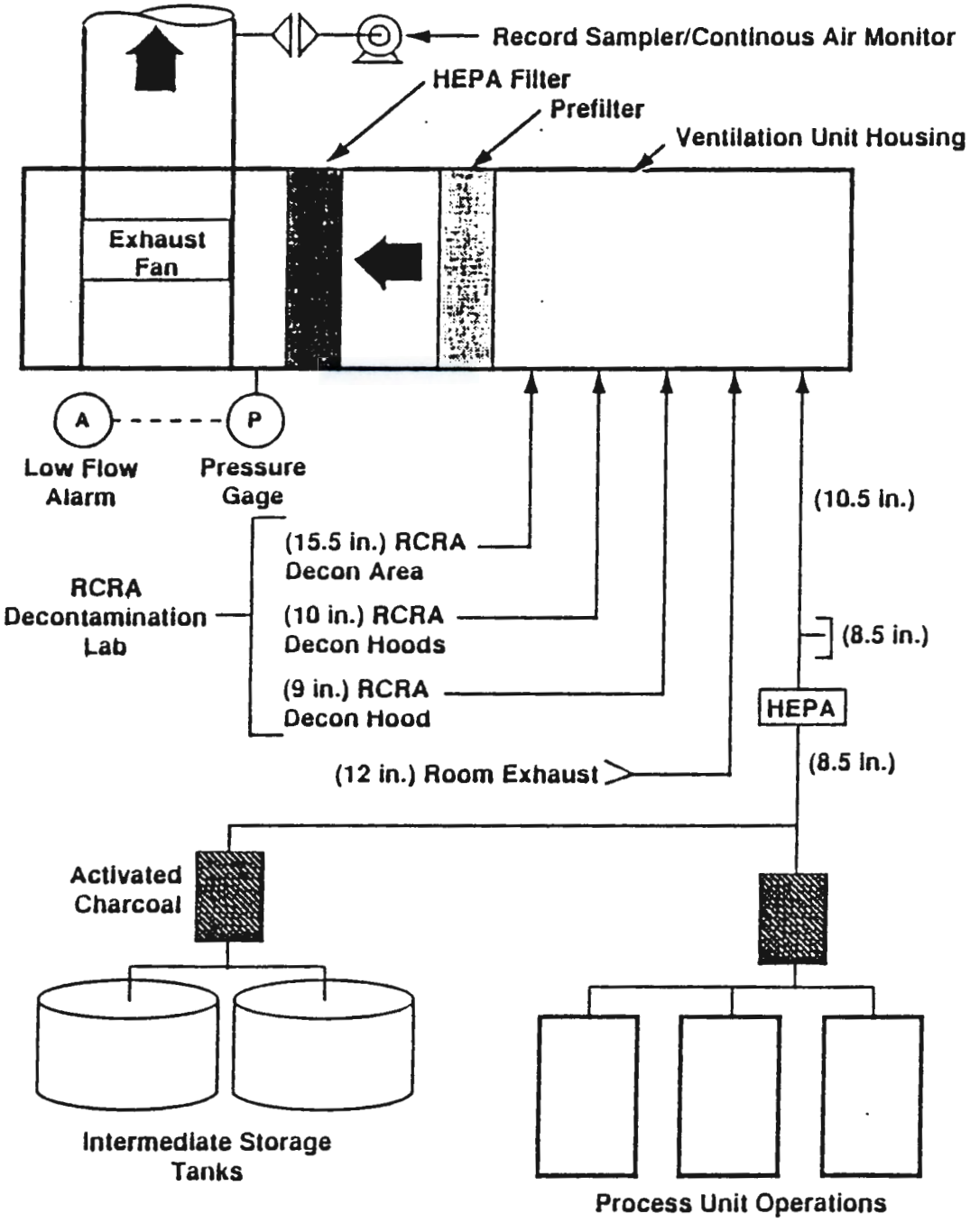

Exhaust Fan
Flow: 12,250 cfm
Max. static: 4.0 in. H_2O

HEPA Filters
(9) filters in parallel
Each 24 in. x 24 in.
(34 ft^2 face area)

Stack Height
20 ft above building rooftop
35 ft abovegrade

39108106.15

Figure 3-2: Process Area Ventilation System

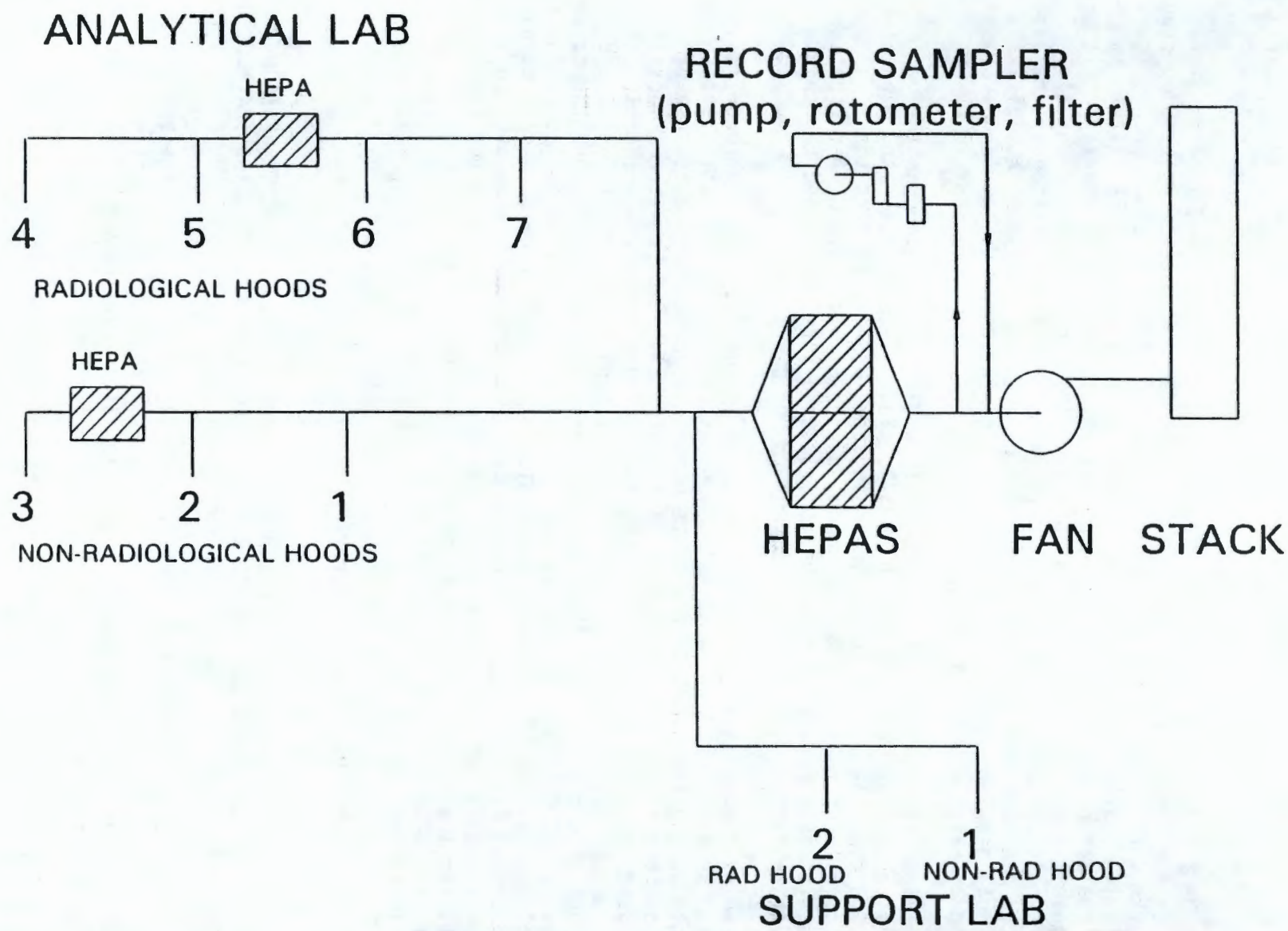

FIGURE 3-3: WASTEWATER PILOT PLANT LAB VENT SYSTEM

The process area, process equipment, tank trailers, and interim storage tanks (see Figure I-1) will be vented through the ventilation system depicted in Figure 3-2. This system has a rated capacity of 12,250 cfm. The ventilation system includes activated charcoal/first stage HEPA filters on individual branches of the ventilation system, followed by a coarse prefilter to remove large particulates and High Efficiency Particulate Air (HEPA) filters before discharge to atmosphere. (Note: This ventilation system also services a decontamination laboratory for Hanford Facility RCRA activities, where soil sampling equipment is cleaned. This decontamination laboratory is independent of the pilot plant operations.)

The analytical labs (see Figure I-1) will be vented through the ventilation system depicted in Figure 3-3. This system has a rated capacity of 12,000 cfm. The ventilation system includes HEPA filters on the radiological and non-radiological hoods, as shown, and final HEPA filtration before discharge to atmosphere. No modification work is planned for this ventilation system.

Release of volatile organics, volatile inorganics (e.g., mercury, ammonia, arsenic), and/or volatile radionuclides to the ventilation system is possible during transfers of the waste water. To minimize the release of these components and to maintain the integrity of the waste water composition to be studied, transfer points will be engineered to minimize volatilization of the waste water. To prevent any volatilization at the filling point, a fill tube extending to the bottom of the tanker will be used. Once the tanker arrives at the C-018H Pilot Plant, any receiving tank will be bottom-filled to control the release of volatile components. The first processing step planned at the C-018H Pilot Plant will, in most cases, adjust the waste water to a pH between 4 and 7. At this pH, most of the ammonia will be converted completely to ammonium ion and will no longer be vulnerable to release. Other potentially volatile inorganics will have a vapor pressure of less than 1 millimeter of mercury at the maximum operating temperatures of the waste water pilot plant. As a result, these potentially volatile inorganics are not considered to be vulnerable for release.

4.0 DESCRIBE THE RADIONUCLIDE CONTROL EQUIPMENT: THE EFFICIENCY OF EACH PIECE OF RADIONUCLIDE CONTROL EQUIPMENT FOR EACH RADIONUCLIDE THAT COULD CONTRIBUTE 10% OR MORE OF THE CEDE TO THE MEI

Carbon adsorption filters (for control of organics and elemental iodine) and HEPA filters (for control of particulate radionuclides) comprise the control devices used for removal of radioactivity from the C-018H Pilot Plant ventilation system.

In Section 7.0, it will be shown that tritium is the only radionuclide with the potential to contribute 10% or more of the CEDE to the MEI. It is understood that tritium is not controlled by HEPA filtration; therefore, no decontamination factor (DF) is claimed for the HEPAs in relationship to control of tritium. Similarly, no DF for control of tritium is claimed for the carbon adsorbers, though in reality carbon adsorption will provide an as

yet unknown level of tritium control. This control will be provided because an unknown quantity of the tritium is bound with the VOCs. Carbon adsorption controls approximately 99% of the VOCs (see discussion below). The following is, then, offered as a description of the radionuclide control equipment for the C-018H Pilot Plant.

A HEPA filter is a throwaway, extended-pleated medium, dry type filter. Hanford Site HEPA filters must meet the following requirements:

- Permissible penetration at test airflows shall be no greater than 0.03% when tested in accordance with NE F 3-43, Article 6.

- Filters shall have a minimum particle collection efficiency of 99.97% for 0.3 micron particle size thermally generated DOP aerosol (or equivalent) at 100% and at 20% of rated flow capacity for filters with a nominal airflow rating of 125 cfm (size 3) and larger and 100% rated flow for filters with a nominal rating below 125 cfm (NE F 3-43, Article 4).

- The pressure differential for air flow across a clean filter assembly when tested at appropriate nominal flows shall not exceed 1.3 inches water gauge (WG) for size 3 HEPAs and smaller, and 1.0 inch WG for HEPAs larger than size 3.

Loading of the HEPA filters will be minimized by roughing filters. The roughing filters are 24 inch by 24 inch by 1 - 7/8 inch thick glass fiber disposable filters of the same construction as household furnace filters.

Trapping of elemental radioiodine involves physical adsorption only, and the efficiency of nearly any good grade of activated carbon, impregnated or not, will be at least 99% (Burchsted et all). However, the primary function of the carbon adsorption units in the C-018H Pilot Plant will be control of organics.

A carbon adsorption unit is approximately 99% efficient for control of the pollutants for which it is designed until the adsorption capacity has been reached. In order to preclude the use of any adsorption unit that may have reached capacity, the units will be replaced when the total amount of volatile organic chemicals shipped to the pilot plant approaches 33 pounds (14.9 kilograms). The rationale behind this procedure is as follows.

Based on an average adsorption coefficient of 0.3 pound (136 grams) of volatile organic chemicals per pound of charcoal, each commercially available, 35-gallon (132.5-liter) charcoal drum will have a capacity of 33 pounds (15 kilograms) of volatile organic chemicals (Cheremisinoff and Ellersbosch 1978). The pilot plant will be designed to accommodate 5,000-gallon (19,000-liter) batches at a nominal flow rate of 5 gallons (18.9 liters) per minute. Using the waste characterization data from the "Stream-Specific Reports" (WHC, 1990) the range of volatile organic chemicals that can be expected in each 5,000 gallon (18,927 liter) batch is approximately 0.05 pounds per tanker to 4.0 pounds per tanker. At the nominal flow rate of

9212579209 0

the pilot plant, this corresponds to a maximum of 0.24 pounds (108.9 grams) per hour of volatile organic chemicals.

Using the conservative assumption that 100 percent of the volatile organic chemicals will be volatilized in a single branch of the ventilation system (i.e., loading only one drum), the charcoal system will have sufficient capacity for 120 batches of the average site waste water or eight batches of the maximum waste water concentration.

Each of the 5,000-gallon batches will be analyzed for volatile organic chemicals. When the total amount of volatile organic chemicals shipped to the pilot plant approaches 33 pounds (14.9 kilograms), the charcoal filters will be replaced. This approach provides sufficient excess capacity because not all of the volatile organic chemicals will volatilize; this approach also is based on the capacity of only one of the two charcoal filters.

5.0 PROVIDE EXPECTED ANNUAL EMISSIONS WITH RADIONUCLIDE CONTROL EQUIPMENT IN PLACE, OR USING 40 CFR 61 APPENDIX D METHODOLOGY, FOR EACH RADIONUCLIDE THAT COULD CONTRIBUTE 10% OR MORE OF THE CEDE TO THE MEI

Expected annual emissions for all radionuclides emitted to atmosphere from the C-018H Pilot Plant were determined in two steps:

1) The ci/yr number (total annual throughput) for each radionuclide was taken from Table 2-1.

2) The extremely conservative approach of using the "front end" of the methodology set forth in Appendix D of 40 CFR 61, Subpart H was then applied to each of the curie numbers. ("Front end" means that no decontamination factor (DF) was claimed for HEPA filtration or filtration by the carbon adsorbers. The only DF claimed was E-03, for radionuclides in a liquid or particulate solid state. No DF was claimed for radionuclides in a gaseous state. It was assumed that the H-3 and I-129 [Methyl Iodide] would be in a gaseous state.)

9 2 1 2 5 7 9 2 0 9 1

Table 5-1, Expected Annual Emissions from C-018H Pilot Plant

Nuclide	Front End App. D Release (Ci/Yr)
Sr-90	3.60 E-05
Ru-106	5.30 E-04
Ru-106 (oxide)	5.30 E-10
Ru-103	1.19 E-04
Ru-103 (oxide)	1.19 E-10
Cs-134	1.70 E-11
Cs-137	1.67 E-04
Pm-147	7.00 E-05
Uranium (gross)	3.02 E-07
H-3	1.29 E+02
Am-241	2.27 E-05
I-129 (elemental)	1.40 E-06
I-129 (methyl I)	7.38 E-05
Pu-238	4.16 E-06
Pu-241	3.60 E-04
Pu-239	3.60 E-05
Sn-113	6.43 E-05
Eu-155	2.65 E-06

The only radionuclide with the potential to contribute greater than 10% of CEDE to the MEI is tritium (See Section 7.0). The projected tritium emissions constitute approximately 80% of the CEDE to the MEI.

9 2 1 2 5 7 9 2 0 9 2

6.0 DESCRIBE THE MONITORING EQUIPMENT. DESCRIBE THE MINIMUM DETECTABLE CONCENTRATION FOR EACH RADIONUCLIDE THAT COULD CONTRIBUTE 10% OR MORE OF THE CEDE TO THE MEI

As shown in Section 7.0, tritium is the only radionuclide that could contribute 10% or more of the CEDE to the MEI from the C-018H Pilot Plant. Also as shown in Section 7.0, the total projected dose from tritium emitted by the C-018H Pilot Plant will be approximately 0.004 mrem/yr. Because this dose is far below the defined "insignificant" level, there are no plans to incur the expense required to install a tritium monitoring system in the C-018H Pilot Plant. The following discussion describes the monitoring equipment that will be used in the pilot plant. This type of monitoring system is standard on the Hanford Site for facilities not having the capacity to provide 0.1 mrem/yr CEDE to the MEI, as defined in 40 CFR 61.

Stack effluent radionuclide content for both stacks at the C-018H Pilot Plant will be monitored with a particulate record sampler. The sample points in both stacks are located at the centerline of the duct. A 1/2 inch nozzle will withdraw a sample at a nominal flow rate of 1 cfm. The sampling train consists of a Gelman 47mm record sampler filter, a Dwyer rotameter, and a Gast air pump. The record sampler filter will be collected monthly and analyzed for total alpha and beta/gamma activity.

7.0 PROVIDE A PROJECTED DOSE TO THE MEI USING AN APPROVED CODE OR METHOD

The projected offsite dose to the MEI provided by the C-018H Pilot Plant was determined by applying dose factors derived from the EPA approved code, CAP 88 (Rhoads, 1991) as set forth in Table 7-1, to the expected annual emissions for each radionuclide, as set forth in Table 5-1.

(Note: It was assumed the 100-K location should have the same wind data and receptor locations as 100-N due to the shape of the Columbia River and Hanford Site boundary.)

(Note: Attached as Appendices A and B are the input and output files, respectively, for the GENII dose modeling that was performed for the convenience of DOH personnel. The results of the GENII modeling confirm the CAP 88 modeling results.)

Table 7-1, Offsite Dose to MEI from C-018H Pilot Plant
MEI Location is 9.9 km West

Nuclide	Front End App. D Release (Ci/Yr)	CAP 88 Dose Factor	Dose to MEI (mrem/yr)
Sr-90	3.60 E-05	6.45 E-02	2.32 E-06
Ru-106	5.30 E-04	3.08 E-02	1.63 E-05
Ru-106 (oxide)	5.30 E-10	3.08 E-02	1.63 E-11
Ru-103	1.19 E-04	2.10 E-03	2.50 E-07
Ru-103 (oxide)	1.19 E-10	2.10 E-03	2.50 E-13
Cs-134	1.70 E-11	4.62 E-02	7.85 E-13
Cs-137	1.67 E-04	3.53 E-02	5.90 E-06
Pm-147	7.00 E-05	1.68 E-03	1.18 E-07
Uranium (gross)	3.02 E-07	4.20 E+00	1.27 E-06
H-3	1.29 E+02	3.36 E-05	4.33 E-03
Am-241	2.27 E-05	1.94 E+01	4.40 E-04
I-129 (elemental)	1.40 E-06	3.19 E-01	4.47 E-07
I-129 (methyl I)	7.38 E-05	3.19 E-01	2.35 E-05
Pu-238	4.16 E-06	1.18 E+01	4.91 E-05
Pu-241	3.60 E-04	2.03 E-01	7.31 E-05
Pu-239	3.60 E-05	1.28 E+01	4.61 E-04
Sn-113	6.43 E-05	1.74 E-03	1.12 E-07
Eu-155	2.65 E-06	2.73 E-03	7.23 E-09
Total			5.39 E-03

As shown, the dose to the MEI of 5.37 E-03 mrem/yr constitutes only 5% of the 0.1 mrem/yr quantity defined as an "insignificant source".

9 2 1 2 5 7 9 2 0 9 4

REFERENCES

Burchsted et al. 1976, "Nuclear Air Cleaning Handbook - Design, Construction, and Testing of High-Efficiency Air Cleaning Systems for Nuclear Application", C. A. Burchsted, J. E. Kahn, and A. B. Fuller, ERDA-76-21, Oak Ridge National laboratory, Oak Ridge, Tennessee.

Cheremisinoff, P. N. and F. Ellersbosch, 1978, "Carbon Adsorption handbook", Ann Arbor Science Publishers Inc., Ann Arbor, Michigan.

NE F 3-43, "Nuclear Standard's Quality Assurance Testing of HEPA Filter", Office of Scientific and Technical Information, Oak Ridge, Tennessee, October, 1988.

Rhoads, K., September 1991, "Transmittal of Quality Assurance Documents for Facility Effluent Monitoring Plan Dose Calculations", Pacific Northwest Laboratories.

WHC, 1990, "Hanford Site Stream-Specific Reports", WHC-EP-0342, Westinghouse Hanford Company, Richland, Washington.

WHC, June 1991, "Functional Design Criteria for the 242-A Evaporator and PUREX Plant Condensate Treatment Facility", WHC-SD-C018-FDC-001 REV 2, Westinghouse Hanford Company, Richland, Washington.

APPENDIX A

GENII INPUT FILE

9 2 1 2 5 7 9 2 0 9 6

```
######################## Program GENII Input File ############  8 Jul 88 ####
Title: Emissions from C-018H Pilot Plant Treatment Facility
       \GENII\NOC.IN                              Created on 12-18-1991 at 07:30
OPTIONS======================== Default ===================================
F    Near-field scenario?      (Far-field)    NEAR-FIELD: narrowly-focused
F    Population dose?         (Individual)                release, single site
F    Acute release?             (Chronic)     FAR-FIELD:  wide-scale release,
     Maximum Individual data set used                     multiple sites
                              Complete                                  Complete
TRANSPORT OPTIONS============ Section   EXPOSURE PATHWAY OPTIONS===== Section
T  Air Transport                  1     T  Finite plume, external        5
F  Surface Water Transport        2     F  Infinite plume, external      5
F  Biotic Transport (near-field)  3,4   T  Ground, external              5
F  Waste Form Degradation (near)  3,4   F  Recreation, external          5
                                        T  Inhalation uptake             5,6
REPORT OPTIONS======================    F  Drinking water ingestion      7,8
T  Report AEDE only                     F  Aquatic foods ingestion       7,8
F  Report by radionuclide               T  Terrestrial foods ingestion   7,9
T  Report by exposure pathway           T  Animal product ingestion      7,10
F  Debug report on screen               T  Inadvertent soil ingestion

INVENTORY ##################################################################

 4   Inventory input activity units: (1-pCi  2-uCi  3-mCi  4-Ci  5-Bq)
 0   Surface soil source units (1- m2  2- m3  3- kg)
     Equilibrium question goes here
```

Use when	Release Terms transport selected			Basic Concentrations near-field scenario, optionally				
Release Radio-nuclide	Air /yr	Surface Water /yr	Buried Waste /m3	Air /m3	Surface Soil /unit	Deep Soil /m3	Ground Water /L	Surface Water /L
H 3	1.3E+02							
SR90	3.6E-05							
Y 90	3.6E-05							
RU103	1.2E-04							
RH103M	1.2E-04							
RU106	5.3E-04							
SN113	6.4E-05							
IN113M	6.4E-05							
I 129	7.5E-05							
CS134	1.7E-11							
CS137	1.7E-04							
PM147	7.0E-05							
EU155	2.7E-06							
U 238	3.0E-07							
TH234	3.0E-07							
PA234	4.8E-10							
PU238	4.2E-06							
PU239	3.6E-05							
PU241	3.6E-04							
AM241	2.3E-05							

```
--------|----Derived Concentrations-----|
Use when|   measured values are known   |
--------|-------------------------------|
Release |Terres. Animal  Drink   Aquatic|
Radio-  |Plant   Product Water   Food   |
nuclide |/kg     /kg     /L      /kg    |
--------|------- ------- ------- -------|

TIME ##################################################################

1     Intake ends after (yr)
50    Dose calc. ends after (yr)
1     Release ends after (yr)
0     No. of years of air deposition prior to the intake period
0     No. of years of irrigation water deposition prior to the intake period

FAR-FIELD SCENARIOS (IF POPULATION DOSE) ####################################

0           Definition option: 1-Use population grid in file POP.IN
0                              2-Use total entered on this line

NEAR-FIELD SCENARIOS ########################################################

            Prior to the beginning of the intake period: (yr)
0             When was the inventory disposed?  (Package degradation starts)
0             When was LOIC?  (Biotic transport starts)
0           Fraction of roots in upper soil (top 15 cm)
0           Fraction of roots in deep soil
0           Manual redistribution: deep soil/surface soil dilution factor
0           Source area for external dose modification factor (m2)
TRANSPORT ###################################################################
            ====AIR TRANSPORT=================================SECTION 1=====
                    0-Calculate PM              |0        Release type (0-3)
 3          Option: 1-Use chi/Q or PM value     |F        Stack release (T/F)
                    2-Select MI dist & dir      |0        Stack height (m)
                    3-Specify MI dist & dir     |0        Stack flow (m3/sec)
0           Chi/Q or PM value                   |0        Stack radius (m)
5           MI sector index (1=S)               |0        Effluent temp. (C)
9900.0      MI distance from release point (m)  |0        Building x-section (m2)
T           Use jf data, (T/F) else chi/Q grid  |0        Building height (m)

            ====SURFACE WATER TRANSPORT=========================SECTION 2=====
0           Mixing ratio model: 0-use value, 1-river, 2-lake
0           Mixing ratio, dimensionless
0           Average river flow rate for: MIXFLG=0 (m3/s), MIXFLG=1,2 (m/s),
0           Transit time to irrigation withdrawl location (hr)
            If mixing ratio model > 0:
0             Rate of effluent discharge to receiving water body (m3/s)
0             Longshore distance from release point to usage location (m)
0             Offshore distance to the water intake (m)
0             Average water depth in surface water body (m)
0             Average river width (m), MIXFLG=1 only
0             Depth of effluent discharge point to surface water (m), lake only
```

```
            ====WASTE FORM AVAILABILITY==========================SECTION 3=====
0           Waste form/package half life, (yr)
0           Waste thickness, (m)
0           Depth of soil overburden, m

            ====BIOTIC TRANSPORT OF BURIED SOURCE================SECTION 4=====
T           Consider during inventory decay/buildup period (T/F)?
T           Consider during intake period (T/F)?    | 1-Arid non agricultural
0           Pre-Intake site condition.............  | 2-Humid non agricultural
                                                    | 3-Agricultural

EXPOSURE ##################################################################

            ====EXTERNAL EXPOSURE================================SECTION 5=====
            Exposure time:                  |  Residential irrigation:
8766.0        Plume (hr)                    | T        Consider: (T/F)
4380.0        Soil contamination (hr)       | 0        Source: 1-ground water
0             Swimming (hr)                 |                  2-surface water
0             Boating (hr)                  | 0        Application rate (in/yr)
0             Shoreline activities (hr)     | 0        Duration (mo/yr)
0           Shoreline type: (1-river, 2-lake, 3-ocean, 4-tidal basin)
0           Transit time for release to reach aquatic recreation (hr)
0           Average fraction of time submersed in acute cloud (hr/person hr)

            ====INHALATION=======================================SECTION 6=====
8766.0      Hours of exposure to contamination per year
1           0-No resus-  1-Use Mass Loading          2-Use Anspaugh model
0.0001        pension      Mass loading factor (g/m3)   Top soil available (cm)

            ====INGESTION POPULATION=============================SECTION 7=====
 1          Atmospheric production definition (select option):
0             0-Use food-weighted chi/Q, (food-sec/m3), enter value on this line
              1-Use population-weighted chi/Q
              2-Use uniform production
              3-Use chi/Q and production grids (PRODUCTION will be overridden)
0           Population ingesting aquatic foods, 0 defaults to total (person)
0           Population ingesting drinking water, 0 defaults to total (person)
F           Consider dose from food exported out of region (default=F)

            Note below: S* or Source: 0-none, 1-ground water, 2-surface water
                                      3-Derived concentration entered above
            ==== AQUATIC FOODS / DRINKING WATER INGESTION=========SECTION 8====

F           Salt water? (default is fresh)

            USE        TRAN-  PROD-    -CONSUMPTION-  |
            ?   FOOD   SIT    UCTION   HOLDUP   RATE  |
            T/F TYPE   hr     kg/yr    da       kg/yr |      DRINKING WATER
            --- ------ -----  -------  ------   ----- |-------------------------
            F   FISH    0.00  0.0E+00   0.00     0.0  | 0      Source (see above)
            F   MOLLUS  0.00  0.0E+00   0.00     0.0  | T      Treatment? T/F
            F   CRUSTA  0.00  0.0E+00   0.00     0.0  | 0      Holdup/transit(da)
            F   PLANTS  0.00  0.0E+00   0.00     0.0  | 0      Consumption (L/yr)
```

9 2 1 2 5 7 9 2 0 9 9

====TERRESTRIAL FOOD INGESTION==========SECTION 9=====

USE ? T/F	FOOD TYPE	GROW TIME da	S *	IRRIGATION RATE in/yr	IRRIGATION TIME mo/yr	YIELD kg/m2	PROD-UCTION kg/yr	CONSUMPTION HOLDUP da	CONSUMPTION RATE kg/yr
T	LEAF V	90.00	0	0.0	0.0	1.5	0.0E+00	1.0	30.0
T	ROOT V	90.00	0	0.0	0.0	4.0	0.0E+00	5.0	220.0
T	FRUIT	90.00	0	0.0	0.0	2.0	0.0E+00	5.0	330.0
T	GRAIN	90.00	0	0.0	0.0	0.8	0.0E+00	180.0	80.0

====ANIMAL PRODUCTION CONSUMPTION==========SECTION 10====

USE ? T/F	FOOD TYPE	HUMAN CONSUMPTION RATE kg/yr	HUMAN CONSUMPTION HOLDUP da	TOTAL PROD-UCTION kg/yr	DRINK WATER CONTAM FRACT.	STORED FEED DIET FRAC-TION	STORED FEED GROW TIME da	STORED FEED S *	STORED FEED IRRIGATION RATE in/yr	STORED FEED IRRIGATION TIME mo/yr	STORED FEED YIELD kg/m3	STORED FEED STOR-AGE da
T	BEEF	80.0	15.0	0.00	0.00	0.25	90.0	0	0.0	0.00	0.80	180.0
T	POULTR	18.0	1.0	0.00	0.00	1.00	90.0	0	0.0	0.00	0.80	180.0
T	MILK	270.0	1.0	0.00	0.00	0.25	45.0	0	0.0	0.00	2.00	100.0
T	EGG	30.0	1.0	0.00	0.00	1.00	90.0	0	0.0	0.00	0.80	180.0
						FRESH FORAGE						
	BEEF					0.75	45.0	0	0.0	0.00	2.00	100.0
	MILK					0.75	30.0	0	0.0	0.00	1.50	0.0

##

9 2 1 2 5 7 9 2 1 0 0

APPENDIX B

GENII OUTPUT FILE

9212579210 1

This is a far-field (wide-scale release, multiple site) scenario.
Release is chronic
Individual dose

THE FOLLOWING TRANSPORT MODES ARE CONSIDERED
Air

THE FOLLOWING EXPOSURE PATHS ARE CONSIDERED:
Finite plume, external
Ground, external
Inhalation uptake
Terrestrial foods ingestion
Animal product ingestion
Inadvertent soil ingestion

THE FOLLOWING TIMES ARE USED:

Intake ends after (yr):	1.0
Dose calculations ends after (yr):	50.0
Release ends after (yr):	1.0

========== FILENAMES AND TITLES OF FILES/LIBRARIES USED ==========

Input file name: \GENII\NOC.IN	12-18-91
GENII Default Parameter Values (28-Mar-90 RAP)	3-28-90
Radionuclide Master Library (11/15/90 PDR)	11-15-90
Food Transfer Factor Library - (RAP 29-Aug-88) (UPDATED LEACHING FA	8-29-88
External Dose Factors for GENII in person Sv/yr per Bq/n (8-May-90 R	5-08-90
Internal Dose Increments, Worst Case Solubilities, 12/3/90 PDR	12-03-90
EXTGAM - Gamma Energies by Group for Finite Plume (13-May-90 RAP)	5-14-90
100 AREA - 10 M - Pasquill A - F (1983 - 1987 Average)	

==========

Release Radio-nuclide	Air Ci/yr	Surface Water Ci/yr	Buried Source Ci/m3
	----Release Terms------		
H 3	1.3E+02	0.0E+00	0.0E+00
SR90	3.6E-05	0.0E+00	0.0E+00
Y 90	3.6E-05	0.0E+00	0.0E+00
RU103	1.2E-04	0.0E+00	0.0E+00
RH103M	1.2E-04	0.0E+00	0.0E+00
RU106	5.3E-04	0.0E+00	0.0E+00
SN113	6.4E-05	0.0E+00	0.0E+00
IN113M	6.4E-05	0.0E+00	0.0E+00
I 129	7.5E-05	0.0E+00	0.0E+00
CS134	1.7E-11	0.0E+00	0.0E+00
CS137	1.7E-04	0.0E+00	0.0E+00
PM147	7.0E-05	0.0E+00	0.0E+00
EU155	2.7E-06	0.0E+00	0.0E+00
U 238	3.0E-07	0.0E+00	0.0E+00
TH234	3.0E-07	0.0E+00	0.0E+00
PA234	4.8E-10	0.0E+00	0.0E+00
PU238	4.2E-06	0.0E+00	0.0E+00
PU239	3.6E-05	0.0E+00	0.0E+00
PU241	3.6E-04	0.0E+00	0.0E+00
AM241	2.3E-05	0.0E+00	0.0E+00

========== AIR TRANSPORT ==========

Joint frequency data input.

9.9E+03	Maximum individual distance from release point (m)
5.0E+00	Maximum individual sector index (Wind Toward W)

Ground level release.

========== EXTERNAL EXPOSURE ==========

8.8E+03	Hours of exposure to plume
4.4E+03	Hours of exposure to ground contamination

========== INHALATION ==========

8.8E+03	Hours of inhalation exposure per year
1	Resuspension model: 1-Mass Loading, 2-Anspaugh
1.0E-04	Mass loading factor (g/m3)

========== INGESTION POPULATION ==========

1	Atmospheric production definition: 1 - Use population-weighted chi/Q

9 2 1 2 5 7 9 2 1 0 3

========== TERRESTRIAL FOOD INGESTION ==========

FOOD TYPE	GROW TIME d	S *	IRRIGATION RATE in/yr	IRRIGATION TIME mo/yr	YIELD kg/m2	PROD-UCTION kg/yr	CONSUMPTION HOLDUP d	CONSUMPTION RATE kg/yr
Leaf Veg	90.0	0	0.0	0.0	1.5		1.0	3.0E+01
Oth. Veg	90.0	0	0.0	0.0	4.0		5.0	2.2E+02
Fruit	90.0	0	0.0	0.0	2.0		5.0	3.3E+02
Cereals	90.0	0	0.0	0.0	0.8		180.0	8.0E+01

========== ANIMAL FOOD INGESTION ==========

FOOD TYPE	HUMAN CONSUMPTION RATE kg/yr	HUMAN HOLDUP d	TOTAL PROD-UCTION kg/yr	DRINK WATER CONTAM FRACT.	STORED FEED DIET FRAC-TION	STORED FEED GROW TIME d	S *	IRRIGATION RATE in/yr	IRRIGATION TIME mo/yr	YIELD kg/m3	STOR-AGE d
Meat	8.0E+01	15.0		0.00	0.3	90.00	0	0.0	0.0	0.80	180.0
Poultry	1.8E+01	1.0		0.00	1.0	90.00	0	0.0	0.0	0.80	180.0
Cow Milk	2.7E+02	1.0		0.00	0.3	45.00	0	0.0	0.0	2.00	100.0
Eggs	3.0E+01	1.0		0.00	1.0	90.00	0	0.0	0.0	0.80	180.0
					FRESH FORAGE						
Meat					0.75	45.0	0	0.0	0.0	2.00	100.0
Cow Milk					0.75	30.0	0	0.0	0.0	1.50	0.0

1.4E-07 Individual chi/Q

GENII Dose Calculation Program
(Version 1.485 3-Dec-90)

Case title: Emissions from C-018H Pilot Plant Treatment Facility

Executed on: 12/18/91 at 14:44:27

Release period:	1.0
Uptake/exposure period:	1.0
Dose commitment period:	50.0
Dose units:	Rem

Organ	Committed Dose Equivalent	Weighting Factors	Weighted Dose Equivalent
Gonads	4.9E-06	2.5E-01	1.2E-06
Breast	4.6E-06	1.5E-01	7.0E-07
R Marrow	7.4E-06	1.2E-01	8.9E-07
Lung	4.9E-06	1.2E-01	5.9E-07
Thyroid	8.3E-06	3.0E-02	2.5E-07
Bone Sur	2.7E-05	3.0E-02	8.1E-07
LL Int.	4.7E-06	6.0E-02	2.8E-07
UL Int.	4.7E-06	6.0E-02	2.8E-07
S Int.	4.6E-06	6.0E-02	2.8E-07
Stomach	4.6E-06	6.0E-02	2.8E-07
Liver	3.7E-06	6.0E-02	2.2E-07
Internal Effective Dose Equivalent			5.8E-06
External Dose			3.3E-10
Annual Effective Dose Equivalent			5.8E-06

Controlling Organ:	Bone Sur
Controlling Pathway:	Ing
Controlling Radionuclide:	H 3
Total Inhalation EDE:	1.5E-06
Total Ingestion EDE:	4.3E-06

92125792105

GENII Dose Calculation Program
(Version 1.485 3-Dec-90)

Case title: Emissions from C-018H Pilot Plant Treatment Facility

Executed on: 12/18/91 at 14:44:27

Release period:	1.0
Uptake/exposure period:	1.0
Dose commitment period:	50.0
Dose units:	Rem

	Dose Commitment Year 1	2	3	...		
Internal Intake Year: 3			0.0E+00	...		
			+			
2		0.0E+00	0.0E+00	...		Internal Effective Dose Equivalent
		+	+			
1	4.7E-06 +	4.5E-08 +	3.3E-08 +	...	= 5.8E-06	
	||	||	||			
Internal Annual Dose	4.7E-06 +	4.5E-08 +	3.3E-08 +	...	= 5.8E-06	Cumulative Internal Dose
	+	+	+		+	
External Annual Dose	3.3E-10	0.0E+00	0.0E+00	...	3.3E-10	
	||	||	||		||	
Annual Dose	4.7E-06 +	4.5E-08 +	3.3E-08 +	...	= 5.8E-06	Cumulative Dose
					4.7E-06	Maximum Annual Dose Occurred In Year 1

9 2 1 2 5 7 9 2 1 0 6

Release period: 1.0
Uptake/exposure period: 1.0
Dose commitment period: 50.0
Dose units: Rem

Committed Dose Equivalent by Exposure Pathway

Pathway	Lung	Stomach	S Int.	UL Int.	LL Int.	Bone Su	R Marro	Testes
Inhale	6.7E-07	4.4E-07	4.4E-07	4.5E-07	4.5E-07	2.1E-05	2.1E-06	7.3E-07
Leaf Veg	1.2E-07	1.2E-07	1.2E-07	1.2E-07	1.3E-07	3.7E-07	1.7E-07	1.2E-07
Oth. Veg	8.8E-07	8.8E-07	8.8E-07	8.9E-07	8.9E-07	1.4E-06	1.1E-06	8.9E-07
Fruit	1.3E-06	1.3E-06	1.3E-06	1.3E-06	1.3E-06	1.9E-06	1.7E-06	1.3E-06
Cereals	2.1E-07	2.1E-07	2.1E-07	2.2E-07	2.2E-07	3.7E-07	2.7E-07	2.2E-07
Meat	3.3E-07	3.3E-07	3.3E-07	3.3E-07	3.3E-07	3.9E-07	4.1E-07	3.3E-07
Poultry	7.6E-08	7.6E-08	7.6E-08	7.6E-08	7.6E-08	8.9E-08	9.3E-08	7.6E-08
Cow Milk	1.1E-06	1.1E-06	1.1E-06	1.1E-06	1.1E-06	1.3E-06	1.4E-06	1.1E-06
Eggs	1.3E-07	1.3E-07	1.3E-07	1.3E-07	1.3E-07	1.5E-07	1.6E-07	1.3E-07
Soil Ing	9.3E-13	1.3E-12	1.7E-12	4.6E-12	1.2E-11	4.3E-10	3.6E-11	7.0E-12
Total	4.9E-06	4.6E-06	4.6E-06	4.7E-06	4.7E-06	2.7E-05	7.4E-06	4.9E-06

Pathway	Ovaries	Muscle	Thyroid	Kidneys	Liver	Spleen
Inhale	7.3E-07	4.4E-07	4.6E-07	2.7E-12	3.5E-06	2.5E-14
Leaf Veg	1.2E-07	1.2E-07	4.3E-07	2.4E-11	4.0E-08	5.1E-14
Oth. Veg	8.9E-07	8.8E-07	1.4E-06	3.3E-11	5.6E-08	7.1E-14
Fruit	1.3E-06	1.3E-06	1.8E-06	3.3E-11	5.6E-08	7.3E-14
Cereals	2.2E-07	2.1E-07	3.9E-07	1.2E-11	2.1E-08	8.9E-15
Meat	3.3E-07	3.3E-07	4.9E-07	1.2E-12	8.4E-11	6.5E-14
Poultry	7.6E-08	7.6E-08	7.6E-08	3.9E-13	9.3E-14	2.4E-19
Cow Milk	1.1E-06	1.1E-06	3.1E-06	7.4E-12	3.6E-12	2.7E-14
Eggs	1.3E-07	1.3E-07	1.5E-07	5.3E-13	7.8E-12	4.0E-19
Soil Ing	6.9E-12	9.0E-13	3.9E-10	4.2E-14	7.4E-11	4.4E-17
Total	4.9E-06	4.6E-06	8.3E-06	1.1E-10	3.7E-06	3.2E-13

9 2 1 2 5 7 9 2 1 0 7

GENII Dose Calculation Program
(Version 1.485 3-Dec-90)

Case title: Emissions from C-018H Pilot Plant Treatment Facility

Executed on: 12/18/91 at 14:44:27

Release period:	1.0
Uptake/exposure period:	1.0
Dose commitment period:	50.0
Dose units:	Rem

External Dose by Exposure Pathway

Pathway	
Plume	3.6E-12
Sur Soil	3.3E-10
Total	3.3E-10

Release period: 1.0
Uptake/exposure period: 1.0
Dose commitment period: 50.0
Dose units: Rem

Radio-nuclide	Inhalation Effective Dose Equivalent	Ingestion Effective Dose Equivalent	External Dose	Internal Effective Dose Equivalent	Annual Effective Dose Equivalent
H 3	4.3E-07	4.1E-06	0.0E+00	4.5E-06	4.5E-06
SR 90	2.6E-10	1.8E-09	6.3E-15	2.0E-09	2.0E-09
Y 90	1.1E-11	1.3E-10	3.5E-13	1.4E-10	1.4E-10
RU 103	3.9E-11	4.8E-11	1.7E-11	8.8E-11	1.0E-10
PD 103	0.0E+00	0.0E+00	0.0E+00	0.0E+00	0.0E+00
RH 103M	2.2E-14	2.0E-13	6.4E-15	2.2E-13	2.2E-13
RU 106	8.9E-09	3.2E-09	1.5E-10	1.2E-08	1.2E-08
SN 113	2.5E-11	5.0E-11	2.3E-13	7.5E-11	7.5E-11
IN 113M	9.6E-14	1.8E-12	1.0E-11	1.9E-12	1.2E-11
I 129	4.1E-10	1.1E-07	1.5E-12	1.1E-07	1.1E-07
CS 134	2.6E-17	8.3E-16	3.9E-17	8.5E-16	8.9E-16
CS 137	1.9E-10	6.2E-09	1.5E-10	6.4E-09	6.6E-09
PM 147	1.0E-10	1.9E-11	8.4E-16	1.2E-10	1.2E-10
SM 147	2.1E-22	4.0E-21	0.0E+00	4.2E-21	4.2E-21
EU 155	4.0E-12	1.1E-12	1.1E-13	5.1E-12	5.2E-12
PU 238	5.9E-08	2.9E-09	2.3E-16	6.2E-08	6.2E-08
U 238	1.3E-09	1.8E-11	1.8E-17	1.3E-09	1.3E-09
TH 234	3.8E-13	1.0E-12	9.7E-15	1.4E-12	1.4E-12
PA 234	1.5E-17	2.7E-16	1.6E-15	2.9E-16	1.8E-15
PU 241	1.1E-07	5.2E-09	2.0E-20	1.1E-07	1.1E-07
AM 241	3.7E-07	1.8E-08	1.8E-13	3.9E-07	3.9E-07
PU 239	5.6E-07	2.8E-08	2.8E-15	5.9E-07	5.9E-07

9 2 1 2 5 7 9 2 1 0 9

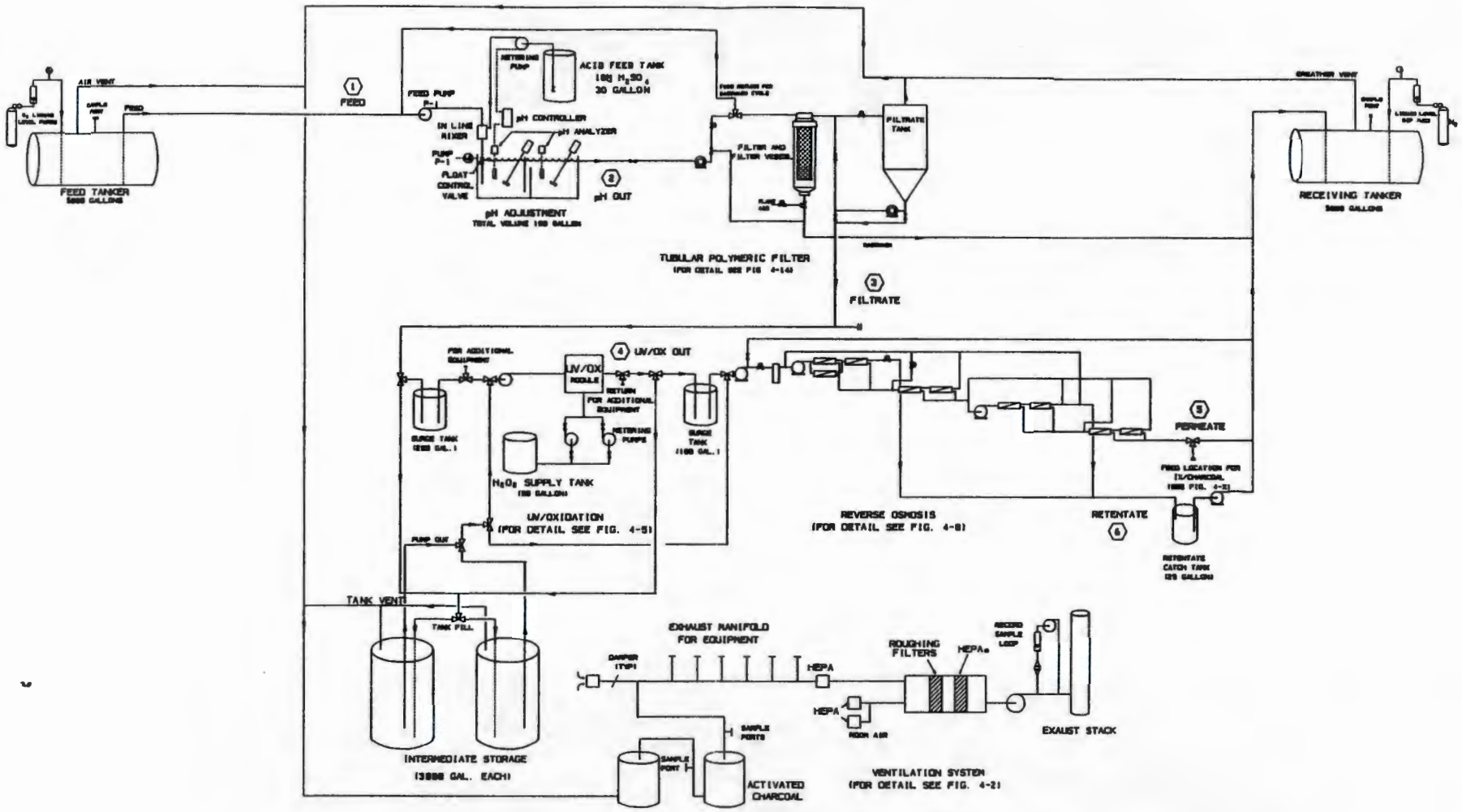

LOCATION	1 FEED	2 pH OUT	3 FILTRATE	4 UV/OX OUT	5 RO PERMEATE	6 RO RETENTATE
FLOW (GPM)	5	5	5	5	4.5	0.5
TEMP (F)						
PRESSURE (PSI)						
pH						
VOC (PPM)						

Critical Parameter Selection Criteria for the C-018H Pilot Plant

At least one of the following two criteria must be met before a parameter is considered a critical parameter.

Loss of control of the parameter can affect:

1) safety of the operating personnel, Hanford site workers, or the general public

2) contamination of the 1706-KE lab, Hanford site, or the general environment

On this basis, the critical parameters identified are:

- high pressure
- high vacuum
- uv light
- corrosion
- tank overflow
- leakage
- radiation
- high temperature
- corrosivity
- differential pressure
- low vessel vent vacuum

Protection from radiation is provided during loading of the trailers at the LERF by source term control.

High pressure and excessive vacuum are ever present dangers where closed vessels fed or evacuated by pumps are present. Some of the more obvious examples are presented.

Corrosion is an all-pervasive hazard. It is covered in detail for one vessel, i.e., the sulfuric acid feed tank for pH adjustment.

Tank overflow is a hazard wherever we are feeding into a tank. Its control is described in detail for one tank, i.e., the pH adjustment tank.

UV light exposure and high temperature are hazards only when operating the uv/ox reactor.

Corrosivity is the property of a chemical that can cause chemical burning and damage to tissue exposed to the chemical. Sulfuric acid and 50 wt% aqueous hydrogen peroxide are the pilot plant reagents considered corrosive.

High differential pressure across the vessel vent offgas HEPA filters can result in loss of vacuum and rupture of the HEPA filters. Loss of vessel vent vacuum can result in tank vapors escaping into the lab or external atmospheres. High pressure differential across the carbon adsorbers can similarly result in a loss of vessel vent system vacuum.

Low differential pressure across the HEPA filters can indicate a breach in the filter with consequent contamination release to the outside atmosphere.

Table 4.x Control of Critical Parameters
(sheet 1 of 10)
(see flowsheet for location of equipment identified by coded numbers; see Table 4.y for equipment code explanation)

Equipment No. & Description	Parameter	Hazard	Control Method (s)	Control Device	Control Setpoint	Alarm Setpoint & Response
TT-tk-1,-2 Trailer Tanks	high pressure	tank rupture followed by personnel injury & environmental contamination	factory installed rupture disk; pressure tested, DOT certified tank	rupture disk TT-pr-1,-2	55±5 psi	NA
			administrative control of vent valve during loading	operator inspection required by procedure	vent valves TT-hv-1,-2 open	NA
TT-tk-1,-2 Trailer Tanks	excessive vacuum	tank collapse followed by personnel injury & environmental contamination	factory installed vacuum relief device; DOT certified tank	vacuum relief device TT-vr-1,-2	0.5 - 5" Hg vacuum	NA
			administrative control of vent valve during unloading	operator inspection required by procedure	vent valves TT-hv-1,-2 open	NA

Table 4.x Control of Critical Parameters
(sheet 2 of 10)
(see flowsheet for location of equipment identified by coded numbers; see Table 4.y for equipment code explanation)

Equipment No. & Description	Parameter	Hazard	Control Method(s)	Control Device	Control Setpoint	Alarm Setpoint & Response
TT-tk-1,-2 Trailer Tanks	high radiation	personnel exposure	DOT MC-312 requirements of 49 CFR 173.425(c)(2)(iii) & (1)(iii)	LERF wastewater analysis prior to loading trailer	≤10% of LSA levels; total fission product activity ≤0.001 mCi/g	NA
LL LERF trailer load/unload station	leakage of wastewater during transfer	environmental contamination	double containment	LERF catch catch basin LL-cb	NA	NA
			administrative control by procedure	visual monitoring by operator	no visible leakage	shutdown transfer pump

Table 4.x Control of Critical Parameters
(sheet 3 of 10)
(see flowsheet for location of equipment identified by coded numbers; see Table 4.y for equipment code explanation)

Equipment No. & Description	Parameter	Hazard	Control Method(s)	Control Device	Control Setpoint	Alarm Setpoint & Response
KU 1706-KE trailer unloading station	leakage of wastewater during waste transfer	environmental contamination	double containment	inflatable berm KU-cb-1 under trailer; catch tank KU-cb-2 under transfer pump	NA	NA
			leak detection	leak detector KU-ld-1 in inflatable berm sump; leak detector KU-ld-2 in catch tank sump	no visible liquid in sumps	≥1" of liquid in either sump will shut down transfer pump KU-pmp & activate visible alarm KU-lah & audible alarm KI-aa
KL 1706-KE trailer loading station	leakage of wastewater during	environmental contamination	double containment	inflatable berm KL-cb under trailer	NA	NA
			leak detection	leak detector KL-ld in inflatable berm sump	no visible liquid in sump	≥1" of liquid in sump will will shut down transfer pumps KI-pmp-1,-2,-3 & visible alarm KL-lah & audible alarm KI-aa

Table 4.x Control of Critical Parameters
(sheet 4 of 10)
(see flowsheet for location of equipment identified by coded numbers; see Table 4.y for equipment code explanation)

Equipment No. & Description	Parameter	Hazard	Control Method(s)	Control Device	Control Setpoint	Alarm Setpoint & Response
KI-UV-vsl uv/ox reactor vessel	high pressure	vessel rupture followed by personnel injury & environmental contamination	vendor installed rupture disk	rupture disk KI-UV-pr	20 psig	NA
			vendor installed pressure switch at feed pump KI-UV-pmp	pressure switch KI-UV-ps	NA	≥15 psig actuates visible alarm KI-UV-pah & shuts down feed pump KI-UV-pmp
			pressure indicator KI-UV-pi-1	administrative control	__ psig	operator shuts down feed pump
	high temperature	thermal stress on quartz sheaths & uv lamps resulting in breach of containment followed by personnel injury & environmental contamination	vendor instal. temperature switch, alarm, & elec. interlock	temperature switch KI-UV-ts	NA	150 deg F (max) activates visible alarm KI-UV-tah, audible alarm KI-aa, and shuts down elec power to module

Table 4.x Control of Critical Parameters
(sheet 5 of 10)
(see flowsheet for location of equipment identified by coded numbers; see Table 4.y for equipment code explanation)

Equipment No. & Description	Parameter	Hazard	Control Method(s)	Control Device	Control Setpoint	Alarm Setpoint & Response
KI-UV-vsl uv/ox reactor vessel	ultraviolet light	personnel exposure to intense uv light	uv filtration	uv filters on view ports	NA	NA
			door closure	door closure limit switch KI-UV-ls-1	NA	open door deactivates elec. power to lamps
LF-FL filtration module at LERF	high pressure	equipment rupture followed by personnel injury & environmental contamination	pressure switch shuts down feed pump	pressure switch LF-FL-ps	__ psig	≥___ psig activates visible alarm LF-FL-pah-1, audible alarm KI-aa, and shuts down feed pump KI-FL-pmp

Table 4.x Control of Critical Parameters
(sheet 6 of 10)
(see flowsheet for location of equipment identified by coded numbers; see Table 4.y for equipment code explanation)

Equipment No. & Description	Parameter	Hazard	Control Method(s)	Control Device	Control Setpoint	Alarm Setpoint & Response
KI-RO reverse osmosis module	high pressure	equipment rupture followed by personnel injury & environmental contamination	vendor installed pressure switch shuts down feed pumps	pressure switch KI-RO-ps; interlocked to feed pumps	NA	400 psig activates visible alarm KI-RO-pah, audible alarm KI-aa, and shuts down feed pumps KI-RO-pmps-1,-2,-3
			administrative control	operator monitors pressure indicators KI-RO-pi-1, -2,-3,-4	approx. 300 psig	at pressure ≥400 psig operator shuts down feed pumps
			pressure regulation	pressure regulator KI-RO-pg	approx. 300 psig	NA

Table 4.x Control of Critical Parameters
(sheet 7 of 10)
(see flowsheet for location of equipment identified by coded numbers; see Table 4.y for equipment code explanation)

Equipment No. & Description	Parameter	Hazard	Control Method(s)	Control Device	Control Setpoint	Alarm Setpoint & Response
KI-PH-tk-1 pH adjustment tank	liquid level	wastewater overflow resulting in environmental contamination	liquid level control	liquid level control loop consisting of level sensor & feed control valve	liquid level corres. to 80% of tank volume	liquid level corres. to 90% of tank volume activates high level visible alarm KI-PH-lah, audible alarm KI-aa, and shuts down feed pump KU-pmp
KI-IX-vsl ion exchange vessel	high pressure	equipment rupture followed by personnel injury & environmental contamination	administrative control by procedure	operator surveillance of feed pump KI-IX-pmp outlet pressure guage KI-IX-pi	__ psig	At pump outlet pressure ≥5 psig shutdown pump, troubleshoot, & repair system

Table 4.x Control of Critical Parameters
(sheet 8 of 10)
(see flowsheet for location of equipment identified by coded numbers; see Table 4.y for equipment code explanation)

Equipment No. & Description	Parameter	Hazard	Control Method(s)	Control Device	Control Setpoint	Alarm Setpoint & Response
KI-PH-tk-2 sulfuric acid feed tank for pH adjustment	corrosion	loss of containment resulting in personnel injury & environmental contamination	administrative: proper design (including material selection), construction, & maintenance	review of engineering design & constr. media, oper. & maintenance procedures	NA	NA
			double containment	spill pan with ≥110% of tank capacity, walls ≥3", footprint ≥1' beyond module	NA	NA
			administrative	operator inspection required by procedure	no visible liquid in spill pan	shutdown, troubleshoot & repair/ replace failed item

Table 4.x Control of Critical Parameters
(sheet 9 of 10)
(see flowsheet for location of equipment identified by coded numbers; see Table 4.y for equipment code explanation)

Equipment No. & Description	Parameter	Hazard	Control Method(s)	Control Device	Control Setpoint	Alarm Setpoint & Response
KI-PH-vsl sulfuric acid feed tank for pH adjustment	corrosive chemical	chemical burns to skin or eyes	administrative control of the chemical handling	personnel protective gear including eye wash station, protective eye wear, rubber gloves	NA	immediately flush affected tissue with copious amount of water, then contact first aid
KI-UV-vsl-2 hydrogen peroxide feed tank for uv/ox reactor	corrosive chemical (50 wt% aqueous hydrogen peroxide)	same as above	same as above	same as above		same as above

Table 4.x Control of Critical Parameters
(sheet 10 of 10)
(see flowsheet for location of equipment identified by coded numbers; see Table 4.y for equipment code explanation)

Equipment No. & Description	Parameter	Hazard	Control Method(s)	Control Device	Control Setpoint	Alarm Setpoint & Response
KI-CL-vsl carbon adsorb. vessel	high pressure	equipment rupture followed by personnel injury & environmental contamination	administrative control by procedure	operator surveillance of feed pump KI-CL-pmp outlet guage KI-CL-pi pressure	__ psig	at feed pump outlet pressure ≥5 psig, shut down feed pump & troubleshoot module
KI-FG-hepa 1706-KE vessel vent HEPA filtration system	high differential pressure (dp)	HEPA filter rupture followed by contamination release to the outside atmosphere	dp control	dp guage KI-FG-dpi-1 activates alarm	NA	dp ≥3" H2O activates high dp alarm KI-FG-dpah & audible alarm KI-aa; troubleshoot
	low differential pressure (dp)	indicates filter rupture followed by contamination release to the outside atmosphere	dp control	dp guage KI-FG-dpi-1 activates alarm	NA	dp ≤0.3" H2O activates low dp alarm KI-GF-dpal & audible alarm KI-aa; troubleshoot
KI-FG 1706-KE vessel vent system	low vacuum	contamination of lab atmosphere	vessel vent continuous vacuum measuement	vacuum guage KI-FG-pi activates alarm	NA	vessel vent vacuum ≤0.5" H2O activates visible alarm KI-FG-pal & audible alarm KI-aa;

Waste Water Pilot Plant Inspection Strategy

Pilot plant inspections will be performed daily and monthly. All of the monthly and daily inspections and some additional ones will be performed prior to startup during the readiness review process.

Inspection Documentation. The daily and monthly inspections will be documented on checklists. The inspector will sign the checklist, print their name, and record the time the inspection occurred. The checklists will be maintained at the facility in an Inspection Checklist notebook. If discrepancies are noted on the checklist, a detailed description of the problem will be written on a Discrepancy Data Sheet. A separate notebook will be maintained for the Discrepancy Data Sheets. A note referencing the Discrepancy Data Sheet will be added to the facility operating logbook. The reference will be carried on each daily entry in the operating logbook until the discrepancy is resolved. The resolution to the discrepancy will be noted on the Discrepancy Data Sheet. The cognizant engineer will be responsible for determining if the problem is significant enough to warrant shutting down the plant.

Daily Inspections. There will be two different parts to the daily inspection checklist. The first will be a list of items to be inspected even when the plant is not operating. The second part will be a list of items to be inspected only when the plant is configured for operation (when the waste trucks are connected for offloading and receiving waste). In general items to be inspected or monitored daily include containment systems and areas subject to spills, overfill and spill protection instruments, mechanical joint on waste transfer lines, some emergency equipment, and hazard communication labels. A detailed list of the proposed daily inspection items is attached.

Monthly Inspections. Monthly inspections will be performed on equipment that is not in use every day or is not expected to malfunction frequently. The same monthly inspections will be performed regardless of the times the pilot plant has been in operation. In general the monthly inspections will include emergency equipment, safety interlocks, and calibration status. A detailed list of the proposed monthly inspection items is attached.

9 2 1 2 5 7 9 2 1 2 3

Daily Inspection List

Emergency and Safety Equipment

Exit Signs, Eyewashes, Hazard Communication Labels on Waste and Process Tanks, Personal Protective Clothing and Equipment, Communication Devices.

Containment Systems

Interior Floor and Wall Coatings for Gaps, Cracks, and Corrosion/Degradation; Exterior Floor and Wall Coatings for Gaps, Cracks, and Corrosion/Degradation; Mechanical Connections and Seals for Evidence of Leaks; Sumps for Presence of Liquid; Tank Secondary Containment for Liquid.

Overfill and Spill Prevention Equipment

Truck and Tank Liquid Levels, Leak Detector Status, Interlock Status

9 2 1 2 5 7 9 2 1 2 4

Monthly Inspection List

Emergency and Safety Equipment

Functional Test of Emergency Lighting; Spill Kit Inventory; Fire Extinguishers and Fire Suppression System; Ventilation System Calibration and DOP Check Status; Functional Test of Waste Truck Transfer Interlock System; Functional Check of Area Radiation CAM Alarms; Functional Check of UV Light Deactivation System; Functional Tests of Filtration, RO, and GAC Column Pressure Interlocks.

Equipment Status

Verify Calibration Status of All Instrumentation, Verify Certification of Tanker Trucks.

9 2 1 2 5 7 9 2 1 2 5

Table 3-1. Data Acquisition Protocol Appropriate to Test Objectives.

Quality Level	Test Objective	Equipment Configuration	Operating Parameters	Analytical Measurements
I	Equipment familiarization and shakedown.	Notebook sketch.	Recorded in notebook and on data sheets. Documentation of equipment ~~required~~ maintenance/ instrument calibrations not required.	Data to be recorded in notebook/data sheets. Determination of precision, ~~maintenance/instrument~~ accuracy, representativeness, ~~calibrations not~~ comparability, and completeness (PARCC) not required.
II	a. Optimization. b. Determination of treatability range. c. Design data.	Documented in notebook, H-drawings, vendor information, operating procedures, and/or Test Plans.	Follow approved procedure. Maintenance/instrument calibrations to be documented.	Same as for Quality Level I above except: documentation of analytical instrument calibrations required. Analyses to be based on SW-846 or other EPA procedure as closely as possible. Deviations to be noted in lab notebook.
III	Delisting petition, RCRA permitting, and WAC 173-216 permitting data.	Same as for Quality Level II above.	Same as for Quality Level II above.	Analyses to be SW-846 or other EPA procedure (no deviations allowed). Data to be "validated" by the Office of Sample Management. Blanks, matrix spikes, matrix spike duplicates, surrogates (VOA), and determination of PARCC required.
IV	Confirmation of delisting and permitting data.	Same as for Quality Level II above.	Same as for Quality Level II above.	Analyses to be performed at CLP laboratory.

in the closure process. This order also minimizes waste generation by reducing the possibility that decontaminated areas will be recontaminated by ongoing decontamination and closure efforts.

8.1.3 Background Level Determination

Pre-pilot plant background levels will be determined in the room in the 1706-KE Building (waste water pilot plant room) to be used for waste water pilot plant testing. Local-area background levels will also be determined at the waste loading and unloading areas, and for the testing area at LERF. These test locations are not known to be contaminated. The purpose of the background sampling will be to establish the current levels of waste constituents at these test locations. These background values will serve as the clean up levels for closure or spill remediation for the waste water pilot plant.

Radionuclide contamination will be used as an indicator of the presence of dangerous waste contamination. If levels of radionuclide contamination in the waste water pilot plant room, the waste loading and unloading areas, or the testing area at LERF, are found to be below levels of concern, then the level of dangerous waste contamination will be assumed to be low. The walls and floor of the waste water pilot plant room will then be coated with epoxy. If localized areas of radionuclide contamination are detected, these areas will be addressed, prior to proceeding with the coating. In the remote chance that significant radionuclide contamination is detected, the test areas will be evaluated for further action in keeping with existing Hanford Facility procedures and maintaining worker exposure 'as low as reasonably achievable' (ALARA).

Two types of background samples will be collected. Wipe samples will be collected on filter paper from the floor and walls of the waste water pilot plant room before the floor and walls are coated with epoxy. Shallow soil samples (less than 3 foot in depth) will be collected at the other testing areas. Samples will be analyzed for semivolatiles using procedure 8270 (SW-846) and PCBs using procedure 8080 (SW-846). ~~the nonvolatile constituents listed in Appendix VIII of 40 CFR 261.~~

Following the collection of background samples and the coating of the waste water pilot plant room with epoxy, pilot plant testing will proceed as planned. The pre-existing contamination level as indicated by the Appendix VIII analyses will be considered as the local-area background for the pilot plant testing room and/or testing areas. This pre-existing contamination will be remediated during closure of the 1706-KE Building and LERF which will occur subsequent to closure of the waste water pilot plant.

8.1.4 Inventory Removal

The maximum waste inventory at the waste water pilot plant at any one time is 5,000 gallons (18,927 liters). The inventory of dangerous waste contained within the waste water pilot plant will be removed using the

Attachment 12

Department of Energy
Richland Operations Office
P.O. Box 550
Richland, Washington 99352

Mr. A. W. Conklin, Head
Air Emissions & Defense Waste Section
Division of Radiation Protection
State of Washington Department of Health
Post Office Box 47827, Mail Stop LE-13
Olympia, Washington 98504-7827

Dear Mr. Conklin:

NOTIFICATION OF MODIFICATION FOR THE 1706-KE LABORATORY

Enclosed with this letter for review and approval is a Notification of Modification developed pursuant to the Washington Administrative Code 246-247, Radiation Protection - Air Emissions for the 1706-KE Laboratory.

The 1706-KE Laboratory is located in the 1706-KE Building in the 100K Area of the Hanford Site. It is proposed that this facility be modified to accommodate pilot plant level testing of various systems being considered for treatment of liquid process effluent generated on the Hanford Site. The first liquid effluent treatment project to utilize the 1706-KE Laboratory will be C-018H, the 242-A Evaporator, and the PUREX Plant Condensate Treatment Facility.

Before pilot plant testing can commence, certain minor modifications to the facility heating, ventilation, and air-conditioning (HVAC) system are necessary. Because pilot plant testing of actual waste will produce emissions to the atmosphere of small quantities of radionuclides, approval from the Washington State Department of Health is required prior to commencement of the HVAC modifications.

On September 26, 1991, in a letter you sent to Ms. E. A. Bracken of the DOE Richland Field Office, guidance was provided regarding information required in a Notification of Modification for an "insignificant source." An insignificant source is defined in the letter as,

> "...one that could result in a committed effective dose equivalent [CEDE] of less than 0.1 mrem dose to the maximally exposed individual [MEI] without controls."

Calculations show that airborne emissions of radionuclides from pilot plant testing of the C-018H influent will provide a CEDE of approximately 0.005 mrem/yr to the MEI (see Section 7.0 of the enclosure).

In accordance with the September 26, 1991, guidance, the enclosure serves as a Notification of Modification for the 1706-KE Laboratory.

9 2 1 2 5 7 9 2 1 2 8

Should you have questions regarding this information or the enclosure please contact Mr. S. D. Stites of my staff on (509) 376-8566.

Sincerely,

R. D. Izatt, Program Manager
Office of Environmental Assurance,
Permits and Policy

Enclosure:
Notification of Modification

cc: R. E. Lerch, WHC
R. W. Oldham, WHC

9212079212 9

Distribution:

C. Clark	DOE-RL (A5-15)
D. Duncan	EPA (HW-074)
J. King	SWEC (A4-35)
C. Massimino	EPA (HW-074)
T. Michelena	Ecology
S. Price	WHC (H4-57)
D. Sherwood	EPA (B5-01)
S. Skurla	WHC (H4-57)
P. Stasch	Ecology
H. Tilden	PNL (P7-68)

ADMINISTRATIVE RECORD: RD&D Permit
[Care of Susan Wray, WHC (H4-22)]

Washington State Department of Ecology, Nuclear And Mixed Waste Library, Mail Stop PV-11

Environmental Protection Agency, Region 10, HW-074