DOE/RL-2009-67
Revision 2

Interim Status Groundwater Quality Assessment Plan for the Single-Shell Tank Waste Management Area TX-TY

Prepared for the U.S. Department of Energy
Assistant Secretary for Environmental Management

U.S. DEPARTMENT OF ENERGY | Richland Operations Office

P.O. Box 550
Richland, Washington 99352

Approved for Public Release;
Further Dissemination Unlimited

DOE/RL-2009-67
Revision 2

Interim Status Groundwater Quality Assessment Plan for the Single-Shell Tank Waste Management Area TX-TY

Date Published
August 2019

Prepared for the U.S. Department of Energy
Assistant Secretary for Environmental Management

U.S. DEPARTMENT OF ENERGY | Richland Operations Office
P.O. Box 550
Richland, Washington 99352

APPROVED
By Lynn M. Ayers at 1:51 pm, Aug 27, 2019

Release Approval Date

Approved for Public Release;
Further Dissemination Unlimited

TRADEMARK DISCLAIMER

Reference herein to any specific commercial product, process, or service by tradename, trademark, manufacturer, or otherwise, does not necessarily constitute or imply its endorsement, recommendation, or favoring by the United States Government or any agency thereof or its contractors or subcontractors.

This report has been reproduced from the best available copy.

Printed in the United States of America

Interim Status Groundwater Quality Assessment Plan for the Single-Shell Tank Waste Management Area TX-TY
DOE/RL-2009-67, Revision 2
Certification

I certify that this monitoring meets the requirements in accordance with 40 CFR 265, "Interim Status Standards for Owners and Operators of Hazardous Waste Treatment, Storage, and Disposal Facilities," **Subpart F, "Groundwater Monitoring," 265.93(d)(3)(i) through (iv).**

8-8-19

Tessa J. Clark
Qualified Geologist

Date

This page intentionally left blank.

Contents

1 Introduction 1-1

1.1 Regulatory Basis 1-4
1.2 Monitoring Objectives 1-5

2 Groundwater Monitoring Program 2-1

2.1 Constituent List and Sampling Frequency 2-1
2.1.1 Sample Schedule Impacts from Well Maintenance and Sampling Logistics 2-8
2.1.2 Well Casing Corrosion 2-8
2.2 Monitoring Well Network 2-9
2.3 Differences Between This Plan and Previous Plan 2-13
2.4 Sampling and Analysis Protocol 2-15

3 Data Evaluation and Reporting 3-1

3.1 Data Review 3-1
3.2 Data Evaluation 3-1
3.3 Interpretation 3-1
3.4 Annual Determination of Monitoring Network 3-2
3.5 Recordkeeping, Reporting, and Notification 3-2

4 Implementation Schedule 4-1

5 References 5-1

Appendices

A Quality Assurance Project Plan ..... A-i

B Sampling Protocol ..... B-i

C Well Construction ..... C-i

D Analytical Methods for Routine Sampling Constituents ..... D-i

E Analytical Methods for Ecology No. 97-407 Appendix 5 Constituents ..... E-i

Figures

Figure 1-1. Location Map for WMA TX-TY 1-2
Figure 2-1. WMA TX-TY Monitoring Well Network 2-10

Tables

Table 1-1. Locations of Pertinent Supporting/Background Information in SGW-60576, *Engineering Evaluation Report for Single Shell Tank Waste Management Area TX-TY Groundwater Monitoring* 1-3

Table 1-2. Pertinent Interim Status Facility Groundwater Quality Assessment Monitoring Requirements 1-6

Table 2-1. Monitoring Well Network and Sample Schedule for WMA TX-TY 2-2

Table 2-2. Dangerous Waste Constituents for 1 Year of Monitoring at Wells Added to the Network 2-4

Table 2-3. Attributes for Wells in the WMA TX-TY Groundwater Monitoring Network 2-11

Table 2-4. Main Differences Between this Monitoring Plan and Previous Monitoring Plan 2-13

Terms

AEA	*Atomic Energy Act of 1954*
DOE	U.S. Department of Energy
DOE-RL	DOE Richland Operations Office
Ecology	Washington State Department of Ecology
EER	engineering evaluation report
EPA	U.S. Environmental Protection Agency
FWS	Field Work Supervisor
QAPjP	quality assurance project plan
RCRA	*Resource Conservation and Recovery Act of 1976*
Tri-Party Agreement	*Hanford Federal Facility Agreement and Consent Order* (Ecology et al., 1989)
TSD	treatment, storage, and disposal
WMA	waste management area

This page intentionally left blank.

1 Introduction

This document presents a revised (Rev. 2) groundwater monitoring program for Waste Management Area (WMA) TX-TY, and when issued into the operating record becomes the principal controlling document for conducting groundwater monitoring under the dangerous waste regulations (WAC 173-303, "Dangerous Waste Regulations") at WMA TX-TY, superseding the previous plan (DOE/RL-2009-67, *Interim Status Groundwater Quality Assessment Plan for the Single-Shell Tank Waste Management Area TX-TY*, Rev. 1). The U.S. Department of Energy (DOE), Richland Operations Office (DOE-RL) is revising this groundwater monitoring plan to incorporate a new monitoring well network based on the evaluation performed in SGW-60576, *Engineering Evaluation Report for Single-Shell Tank Waste Management Area TX-TY Groundwater Monitoring.* This groundwater plan is based on the requirements for interim status facilities, as defined by the *Resource Conservation and Recovery Act of 1976* (RCRA), with regulations promulgated by the Washington State Department of Ecology (Ecology) in the *Washington Administrative Code* and the *Code of Federal Regulations* by reference (WAC 173-303-400, "Dangerous Waste Regulations," "Interim Status Facility Standards"; 40 CFR 265, "Interim Status Standards for Owners and Operators of Hazardous Waste Treatment, Storage, and Disposal Facilities," Subpart F, "Ground-Water Monitoring"). This plan is required by 40 CFR 265.90(a) and (b), "Applicability," and is intended to satisfy groundwater monitoring requirements applicable to interim status treatment, storage, and disposal (TSD) units that are in a groundwater quality assessment program, as required by WAC 173-303-400(3) and 40 CFR 265, Subpart F, and collect information to determine the concentration of any dangerous waste originating from WMA TX-TY in groundwater and to determine the rate and extent of migration.

WMA TX-TY is an inactive single-shell tank farm at the Hanford Site (Figure 1-1) and is part of an interim status TSD unit (Single-Shell Tank System). In accordance with Section I.A of WA7890008967, *Hanford Facility Resource Conservation and Recovery Act (RCRA) Permit, Dangerous Waste Portion for the Treatment, Storage, and Disposal of Dangerous Waste* (hereinafter referred to as the Hanford Facility RCRA Permit), WMA TX-TY will continue to be considered under interim status until it is incorporated into Part III, V, and/or VI of the Hanford Facility RCRA Permit or until interim status is terminated. Therefore, groundwater monitoring for WMA TX-TY continues under interim status requirements. For regulatory purposes, the boundary of WMA TX-TY is identified on the Hanford Facility RCRA Permit Part A Form for the Single-Shell Tank System.

SGW-60576 is one of a suite of groundwater monitoring engineering evaluation reports (EERs) for regulated units located within the Hanford Site Central Plateau that were prepared to support Part B (final status) permit application material for the future Revision 9 of WA7890008967, *Hanford Facility Dangerous Waste Permit* (hereinafter referred to as the Hanford Facility Dangerous Waste Permit). The EERs do not create any groundwater monitoring requirements; however, they contain the most comprehensive background information supporting groundwater monitoring to date for each regulated unit. Detailed area-wide and unit-specific groundwater evaluation methodology was used to assess the locations of existing wells, and propose locations for new wells, that would detect groundwater contamination that may occur from each regulated unit. For 200 West Area units, particle-tracking calculations, as well as an evaluation of vertical contaminant migration, were performed to evaluate the existing monitoring well networks and propose new well networks, as appropriate.

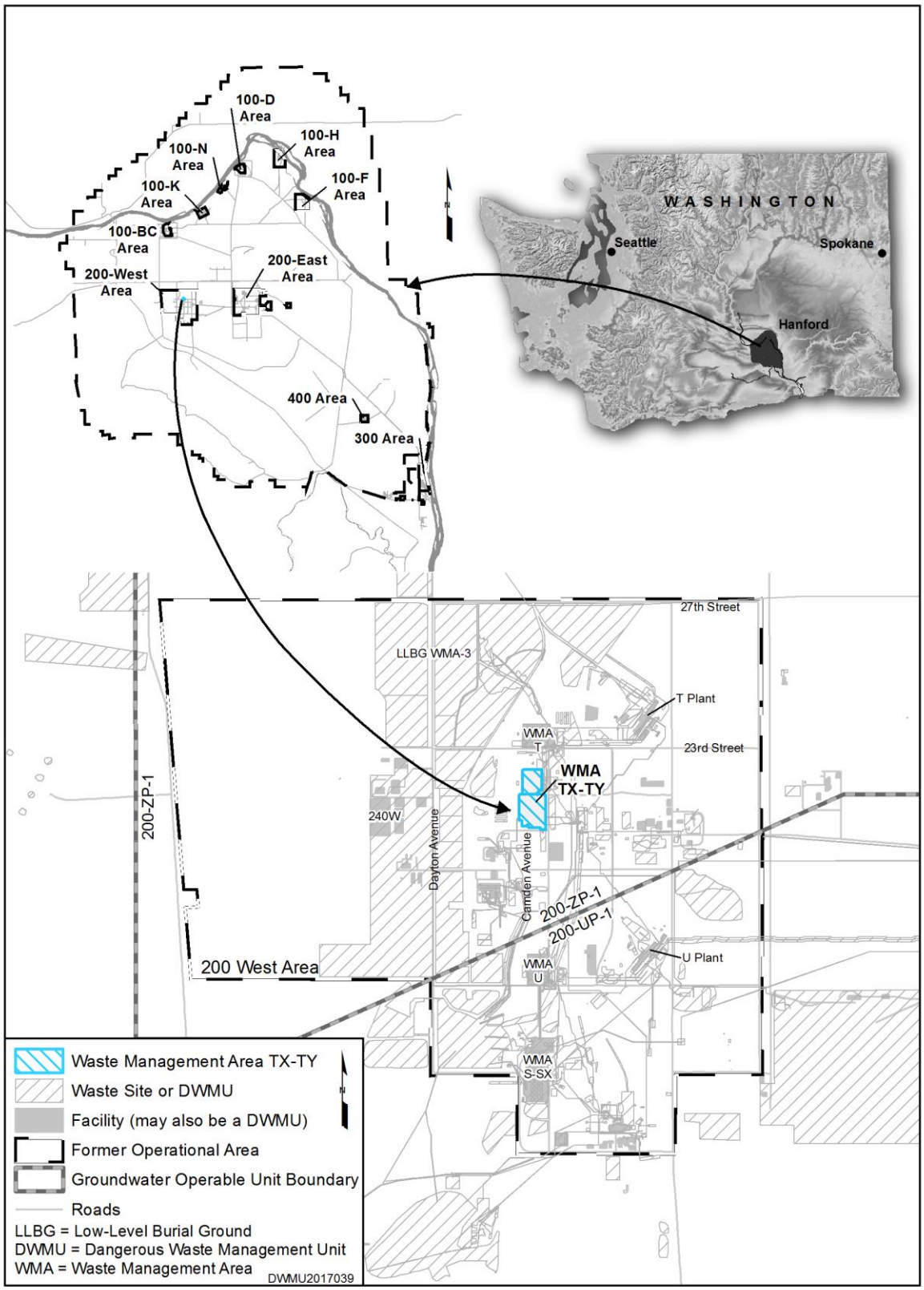

Figure 1-1. Location Map for WMA TX-TY

Regular updates to the EERs are planned as new data become available and changes to groundwater conditions are identified. Because regular updates to the EERs will ensure that they remain the most updated source for unit-specific information related to groundwater monitoring (e.g., hydrogeologic conditions, contaminant migration conceptual models, etc.), the detailed information specific to WMA TX-TY that is provided in SGW-60576 is included only by reference in this interim status groundwater monitoring plan.

One of the primary objectives of the EERs is to identify a well network for the monitoring that is required at a final status unit under WAC 173-303-645, "Releases from Regulated Units." At WMA TX-TY, the proposed final status network also meets the requirements for monitoring under WAC 173-303-400 and 40 CFR 265, Subpart F; therefore, it is incorporated into this plan. Table 1-1 identifies the locations where information that is pertinent to this groundwater monitoring plan is presented in SGW-60576.

Table 1-1. Locations of Pertinent Supporting/Background Information in SGW-60576, *Engineering Evaluation Report for Single Shell Tank Waste Management Area TX-TY Groundwater Monitoring*

Section/ Subsection	Title/Topic
2.1	Background
2.1.1	Facility Description
2.1.2	Operational History
2.1.3	Single-Shell Tanks and Liquid Handling Structures within Waste Management Area TX-TY
2.1.4	Unplanned Releases
2.3	Waste Characteristics
2.4	Interim Status Monitoring Network and Sampling History
3.1	Stratigraphy
3.2	Hydrogeology
3.3	Groundwater Flow System
4	Contaminant Migration Conceptual Model
4.1	Vadose Zone
4.2	Soil Moisture Factors
4.3	Hydrogeologic Considerations
4.4	Groundwater Chemistry
5	Groundwater Flow Simulations
6	Calculations
7	Simulation Results and Conclusions
9.3	Proposed Groundwater Monitoring Network
9.3.1	Groundwater Monitoring Well WMA_TX-TY_PW1

Table 1-1. Locations of Pertinent Supporting/Background Information in SGW-60576, *Engineering Evaluation Report for Single Shell Tank Waste Management Area TX-TY Groundwater Monitoring*

Section/ Subsection	Title/Topic
9.3.2	Groundwater Monitoring Well WMA_TX-TY_PW2
9.3.3	Groundwater Monitoring Well 299-W10-26
9.3.4	Groundwater Monitoring Well 299-W10-27
9.3.5	Groundwater Monitoring Well 299-W14-13
9.3.6	Groundwater Monitoring Well 299-W14-14
9.3.7	Groundwater Monitoring Well 299-W14-15
9.3.8	Groundwater Monitoring Well 299-W14-18
9.3.9	Groundwater Monitoring Well 299-W14-19

This groundwater monitoring plan includes the following chapters and appendices:

- Chapter 2 describes the groundwater monitoring program, including the wells in the monitoring network, constituents analyzed, sampling frequency, and sampling protocols.
- Chapter 3 describes data evaluation and reporting.
- Chapter 4 provides the schedule of implementation.
- Chapter 5 contains the references cited in this plan.
- Appendix A provides the quality assurance project plan (QAPjP).
- Appendix B contains sampling protocols.
- Appendix C provides information for the wells within the groundwater monitoring network.
- Appendix D provides the analytical methods for WMA TX-TY routine sampling constituents.
- Appendix E provides the analytical methods for constituents identified in Appendix 5 of Ecology Publication No. 97-407, *Chemical Test Methods For Designating Dangerous Waste WAC 173-303-090 & -100*, that are sampled for 1 year at wells that are added to the monitoring network.

1.1 Regulatory Basis

In May 1987, DOE issued a final rule (10 CFR 962, “Byproduct Material”) stating that the hazardous waste components of mixed waste are subject to RCRA regulations. Ecology gained regulatory authority over the hazardous waste components of mixed waste on August 19, 1987.

In May 1989, DOE, the U.S. Environmental Protection Agency (EPA), and Ecology signed Ecology et al., 1989, *Hanford Federal Facility Agreement and Consent Order* (Tri-Party Agreement). This agreement established the roles and responsibilities of the agencies involved in regulating and

controlling remedial restoration of the Hanford Site, which includes WMA TX-TY. Groundwater monitoring is conducted at WMA TX-TY in accordance with WAC 173-303-400(3) (and, by reference, 40 CFR 265, Subpart F), which requires monitoring to determine whether the dangerous waste constituents from the TSD unit have entered the groundwater in the uppermost aquifer underlying WMA TX-TY.

Dangerous waste is regulated under RCW 70.105, "Hazardous Waste Management," and its Washington State implementing regulations (WAC 173-303). Radionuclides in mixed waste may include "source, special nuclear, and byproduct materials" as defined in the *Atomic Energy Act of 1954* (AEA). The AEA states that these radionuclide materials are regulated at DOE facilities, exclusively by DOE, acting pursuant to its AEA authority. Radionuclide materials are not hazardous/dangerous wastes and, therefore, are not subject to regulation by the State of Washington under RCRA or RCW 70.105.

In 1989, an interim status indicator parameter groundwater monitoring program (WHC-SD-EN-AP-012, *40 CFR 265 Interim-Status Ground-Water Monitoring Plan for the Single-Shell Tanks*) was initiated at WMA TX-TY. The indicator parameter monitoring program continued until 1993 when WMA TX-TY (along with WMA T) was placed into a groundwater quality assessment monitoring program in accordance with 40 CFR 265.93(d), "Preparation, Evaluation, and Response." The groundwater quality assessment was required because specific conductance results in a downgradient well exceeded the critical mean in November 1992 (Section 4.2 in WHC-SD-EN-AP-132, *Interim-Status Groundwater Quality Assessment Plan for the Single Shell Tank Waste Management Areas T and TX-TY*).

In 1998, a phase I assessment report for WMA T and WMA TX-TY was issued (PNNL-11809, *Results of Phase I Groundwater Quality Assessment for Single-Shell Tank Waste Management Areas T and TX-TY at the Hanford Site*). For WMA TX-TY, the report concluded that elevated nitrate, calcium, and magnesium concentrations were consistent with a source within WMA TX-TY, and that there was no direct evidence of an upgradient source (Section 4.2.2 in PNNL-11809).

In 2001, a revised assessment plan (PNNL-12072, *RCRA Assessment Plan for Single-Shell Tank Waste Management Area TX-TY at the Hanford Site*) was issued that addressed monitoring for WMA TX-TY only (WMA T continued in assessment under a separate plan). The objective of the revised plan (PNNL-12072) was to address continued assessment of groundwater quality and to determine the concentrations of groundwater contamination and the rate and extent of contaminant migration (Section 1.2 in PNNL-12072).

In 2002, a second assessment report (PNNL-14004, *RCRA Groundwater Quality Assessment Report for Single-Shell Tank Waste Management Area TX-TY (January 1998 through December 2001*)) identified elevated chromium in a replacement well drilled in 1998 (Section 4.1.2.1). The report provided the rate and extent of contaminant migration, concentration of the contaminant (chromium), and did not eliminate WMA TX-TY as a source for the downgradient chromium contamination (Section 7.0 in PNNL-14004). Interim status groundwater monitoring at WMA TX-TY has since continued under a groundwater quality assessment program.

In 2011, the most recent WMA TX-TY groundwater quality assessment plan (DOE/RL-2009-67, Rev. 0) was issued (details of the groundwater monitoring history are available in Section 2.4 of SGW-60576), with this revision (Rev. 2) being the most current.

1.2 Monitoring Objectives

The objective of the groundwater monitoring program at WMA TX-TY is to determine the groundwater concentration of any dangerous waste originating from WMA TX-TY and to determine the rate and

extent of migration. This groundwater monitoring plan addresses those applicable dangerous waste requirements for interim status TSD units where an impact to groundwater has been identified.
The regulatory requirements applicable to this interim status groundwater monitoring plan are found in WAC 173-303-400(3) and 40 CFR 265.90 through 265.94, "Recordkeeping and Reporting." Table 1-2 identifies where each groundwater quality assessment monitoring element of the pertinent regulations is addressed within this plan.

Table 1-2. Pertinent Interim Status Facility Groundwater Quality Assessment Monitoring Requirements

Groundwater Monitoring Element	Pertinent Requirement*	Section Where Requirement is Addressed in Monitoring Plan
Applicability	40 CFR 265.90, "Applicability": (a) Within one year after the effective date of these regulations, the owner or operator of a surface impoundment, landfill, or land treatment facility which is used to manage hazardous waste must implement a ground-water monitoring program capable of determining the facility's impact on the quality of ground water in the uppermost aquifer underlying the facility, except as §265.1 and paragraph (c) of this section provide otherwise. (b) Except as paragraphs (c) and (d) of this section provide otherwise, the owner or operator must install, operate, and maintain a ground-water monitoring system which meets the requirements of §265.91, and must comply with §§265.92 through 265.94. This ground-water monitoring program must be carried out during the active life of the facility, and for disposal facilities, during the post-closure care period as well.	Chapter 1

Table 1-2. Pertinent Interim Status Facility Groundwater Quality Assessment Monitoring Requirements

Groundwater Monitoring Element	Pertinent Requirement*	Section Where Requirement is Addressed in Monitoring Plan
Number and location of wells	40 CFR 265.91, "Ground-water Monitoring System": (a) A ground-water monitoring system must be capable of yielding ground-water samples for analysis and must consist of: (1) Monitoring wells (at least one) installed hydraulically upgradient (i.e., in the direction of increasing static head) from the limit of the waste management area. Their number, locations, and depths must be sufficient to yield ground-water samples that are: (i) Representative of background ground-water quality in the uppermost aquifer near the facility; and (ii) Not affected by the facility; and (2) Monitoring wells (at least three) installed hydraulically downgradient (i.e., in the direction of decreasing static head) at the limit of the waste management area. Their number, locations, and depths must ensure that they immediately detect any statistically significant amounts of hazardous waste or hazardous waste constituents that migrate from the waste management area to the uppermost aquifer.	Section 2.2 and Table 2-7
Well configuration	40 CFR 265.91: (c) All monitoring wells must be cased in a manner that maintains the integrity of the monitoring well borehole. This casing must be screened or perforated, and packed with gravel or sand where necessary to enable sample collection at depths where appropriate aquifer flow zones exist. The annular space (i.e., the space between the borehole and well casing) above the sampling depth must be sealed with a suitable material (e.g., cement grout or bentonite slurry) to prevent contamination of samples and the ground-water. Additional Requirements from WAC 173-303-400(3)(c)(v)(C) , "Dangerous Waste Regulations," "Interim Status Facility Standards": Groundwater monitoring wells must be designed, constructed, and operated so as to prevent ground-water contamination. Chapter 173-160 WAC may be used as guidance in the installation of wells	Section 2.2 and Appendix C
Constituents to be sampled Frequency of sampling Number, location, depth of wells	40 CFR 265.93, "Preparation, Evaluation, and Response": (d)(3) The plan to be submitted under §265.90(d)(1) or paragraph (d)(2) of this section must specify: (i) The number, location, and depth of wells; (ii) Sampling and analytical methods for those hazardous wastes or hazardous constituents in the facility;	Sections 2.1, 2.2, 3.2, and 3.3 Appendix A, Section A3 and Appendix B, Sections B2 through B5, Appendix D

Table 1-2. Pertinent Interim Status Facility Groundwater Quality Assessment Monitoring Requirements

Groundwater Monitoring Element	Pertinent Requirement*	Section Where Requirement is Addressed in Monitoring Plan
	(iii) Evaluation procedures, including any use of previously-gathered groundwater quality information; and (iv) A schedule of implementation.	
Determination of contaminant concentration and migration	40 CFR 265.93: (d)(4) The owner or operator must implement the ground-water quality assessment plan which satisfies the requirements of paragraph (d)(3) of this section, and, at a minimum, determine: (i) The rate and extent of migration of the hazardous waste or hazardous waste constituents in the ground-water; and (ii) The concentrations of the hazardous waste or hazardous waste constituents in the ground-water.	Sections 3.2 and 3.5
Recordkeeping and reporting	40 CFR 265.93: (d)(5) The owner or operator must make his first determination under paragraph (d)(4) of this section, as soon as technically feasible, and prepare a report containing an assessment of groundwater quality. This report must be placed in the facility operating record and be maintained until closure of the facility. (d)(6) If the owner or operator determines, based on the results of the first determination under paragraph (d)(4) of this section, that no hazardous waste or hazardous waste constituents from the facility have entered the ground water, then he may reinstate the indicator evaluation program. If the owner or operator reinstates the indicator evaluation program, he must so notify the Regional Administrator in the report submitted under paragraph (d)(5) of this section. (d)(7) If the owner or operator determines, based on the first determination under paragraph (d)(4) of this section, that hazardous waste or hazardous waste constituents from the facility have entered the ground-water, then he: (i) Must continue to make the determinations required under paragraph (d)(4) of this section on a quarterly basis until final closure of the facility, if the ground-water quality assessment plan was implemented prior to final closure of the facility Additional requirements from WAC 173-303-400(3)(c)(v)(E), "Dangerous Waste Regulations," "Interim Status Facility Standards": A copy of the report must be submitted to the department within 15 days. (e) Notwithstanding any other provision of this subpart, any groundwater quality assessment to satisfy the requirements of 265.93(d)(4) which is initiated prior to final closure of the	Section 3.5 Appendix A, Sections A2.5 and A3.9

Table 1-2. Pertinent Interim Status Facility Groundwater Quality Assessment Monitoring Requirements

Groundwater Monitoring Element	Pertinent Requirement*	Section Where Requirement is Addressed in Monitoring Plan
	facility must be completed and reported in accordance with 265.93(d)(5). 40 CFR 265.94, "Recordkeeping and Reporting": (b) If the groundwater is monitored to satisfy the requirements of §265.93(d)(4), the owner or operator must: (1) Keep records of the analyses and elevations specified in the plan, which satisfies the requirements of §265.9(d)(3) throughout the active life of the facility, and, for disposal facilities throughout the post-closure care period was well; and (2) Annually, until final closure of the facility, submit to the Regional Administrator a report containing the results of his or her groundwater quality assessment program which includes, but is not limited to, the calculated (or measured) rate of migration of hazardous water or hazardous waste constituent in the groundwater during the reporting period. This information must be submitted no later than March 1 following each calendar year.	

Notes: The references cited in this table are listed in Chapter 5 of this plan.

In accordance with WAC 173-303-400(3)(b), "Dangerous Waste Regulations," "Interim Status Facility Standards", for the purposes of applying the interim status standards of 40 CFR 265, Subpart F, "Ground-Water Monitoring," the federal terms "Regional Administrator" means the "Department" and "Hazardous" means "Dangerous."

In accordance with Section I.A of WA7890008967, *Hanford Facility Resource Conservation and Recovery Act (RCRA) Permit, Dangerous Waste Portion for the Treatment, Storage, and Disposal of Dangerous Waste* (Hanford Facility RCRA Permit), this unit will continue to be considered an interim status unit until is it incorporated into Part III, V, and/or VI of the Hanford Facility RCRA Permit, or until interim status is terminated. Therefore, groundwater monitoring continues under interim status requirements.

*RCRA regulatory requirements for interim status treatment, storage, and disposal units are found in WAC 173-303-400(3), "Dangerous Waste Regulations," "Interim Status Facility Standards," and 40 CFR 265.90, "Interim Status Standards for Owners and Operators of Hazardous Waste Treatment, Storage, and Disposal Facilities," "Applicability," through 40 CFR 265.94, "Recordkeeping and Reporting," which are applicable to this groundwater monitoring plan.

This page intentionally left blank.

2 Groundwater Monitoring Program

This chapter describes the groundwater quality assessment monitoring program for WMA TX-TY, including the dangerous waste constituent to be analyzed, sampling frequency, monitoring well network, and sampling and analysis protocols, and summarizes the differences between this plan and the previous groundwater monitoring plan (DOE/RL-2009-67, Rev. 1).

2.1 Constituent List and Sampling Frequency

Table 2-1 presents the wells in the groundwater monitoring network, constituents to be analyzed, and the sampling frequency for monitoring of WMA TX-TY. The constituents identified for routine sampling in the previous assessment plan, including the dangerous waste constituent (chromium, with analysis for hexavalent chromium as a supporting constituent), supporting constituents (alkalinity, anions, and metals), and field measurements (dissolved oxygen, pH, specific conductance, temperature, turbidity, and water level), will continue to be sampled in this plan, at a quarterly frequency. Consistent with the requirements of 40 CFR 265.92(e), "Sampling and Analysis," water-level measurements at each monitoring well will be determined each time that a sample is obtained. The analytical methods associated with the routine sampling constituents are provided in Appendix D.

Chapters 5 through 7 of the groundwater monitoring EER (SGW-60576) evaluated the ability of the WMA TX-TY monitoring network that was used in 2016 to detect contamination from the unit, and made recommendations for a revised monitoring network based on the results. The revised network (which is utilized in this monitoring plan) includes two new proposed upgradient wells, WMA_TX-TY_PW1 and WMA_TX-TY_PW2 (identifications for the proposed wells are D0020 and D0021, respectively), that replace existing upgradient wells 299-W15-44 and 299-W15-765 due to their proximity to 200 West P&T system extraction wells (Section 7.4 in SGW-60576). Once installed, the new wells will be sampled quarterly for the constituents identified in Appendix 5 of Ecology Publication No. 97-407 (Table 2-2) for a 1-year period to evaluate for the presence of any dangerous waste constituents or inadvertent contamination that occurred from the well drilling process (e.g., introduction of oil, grease, or other well construction materials used during drilling operations). At the discretion of DOE-RL, monitoring for constituents identified in Appendix 5 of Ecology Publication No. 97-407 (or a subset of the constituents) may be continued beyond 1 year if deemed necessary. Monitoring for the constituents in Table 2-2 will be performed concurrently with the monitoring required in Table 2-1. The analytical methods associated with the constituents identified in Appendix 5 of Ecology Publication No. 97-407 are provided in Appendix E.

Table 2-1. Monitoring Well Network and Sample Schedule for WMA TX-TY

Well	Purpose	WAC Compliant	Routine Sampling Constituents											Table 2-2[d]
			Dangerous Waste Constituent	Supporting Constituents				Field Measurements						
			Chromium (Filtered and Unfiltered)	Alkalinity[a]	Anions[b]	Hexavalent Chromium (Filtered)	Metals (Filtered and Unfiltered)[c]	Dissolved Oxygen	pH	Specific Conductance	Turbidity	Temperature	Water Level	
WMA_TX-TY_PW1 (D0020)[d]	Upgradient	Y	Q	Q	Q	Q	Q	Q	Q	Q	Q	Q	Q	Q
WMA_TX-TY_PW2 (D0021)[d]	Upgradient	Y	Q	Q	Q	Q	Q	Q	Q	Q	Q	Q	Q	Q
299-W15-44[e]	Upgradient	Y	Q	Q	Q	Q	Q	Q	Q	Q	Q	Q	Q	N/A
299-W15-765[e]	Upgradient	Y	Q	Q	Q	Q	Q	Q	Q	Q	Q	Q	Q	N/A
299-W10-26	Downgradient	Y	Q	Q	Q	Q	Q	Q	Q	Q	Q	Q	Q	N/A
299-W10-27	Downgradient	Y	Q	Q	Q	Q	Q	Q	Q	Q	Q	Q	Q	N/A
299-W14-13	Downgradient	Y	Q	Q	Q	Q	Q	Q	Q	Q	Q	Q	Q	N/A
299-W14-14	Downgradient	Y	Q	Q	Q	Q	Q	Q	Q	Q	Q	Q	Q	N/A
299-W14-15	Downgradient	Y	Q	Q	Q	Q	Q	Q	Q	Q	Q	Q	Q	N/A
299-W14-18	Downgradient	Y	Q	Q	Q	Q	Q	Q	Q	Q	Q	Q	Q	N/A
299-W14-19	Downgradient	Y	Q	Q	Q	Q	Q	Q	Q	Q	Q	Q	Q	N/A

Table 2-1. Monitoring Well Network and Sample Schedule for WMA TX-TY

Well	Purpose	WAC Compliant	Routine Sampling Constituents											Table 2-2[d]
			Dangerous Waste Constituent	Supporting Constituents				Field Measurements						
			Chromium (Filtered and Unfiltered)	Alkalinity[a]	Anions[b]	Hexavalent Chromium (Filtered)	Metals (Filtered and Unfiltered)[c]	Dissolved Oxygen	pH	Specific Conductance	Turbidity	Temperature	Water Level	

a. Alkalinity includes analysis of bicarbonate alkalinity, carbonate alkalinity, and hydroxide alkalinity.

b. Anions; analytes include chloride, fluoride, nitrate, and sulfate.

c. Metals; analytes include aluminum, calcium, chromium, magnesium, potassium, and sodium. Chromium, iron, manganese, and nickel will also be analyzed to identify well casing corrosion. Unfiltered samples will be collected in conjunction with filtered samples for select analysis to determine if metal constituents being monitored occur as both suspended and dissolved phases, or in only one state. The evaluation of suspended and dissolved metals provide supporting information for groundwater geochemical characteristics, as well as indication of well integrity such as the presence of dislodged well encrustation, well corrosion products, or failure of the well screen filter pack.

d. Sampling for the constituents identified in Appendix 5 of Ecology Publication No. 97-407, *Chemical Test Methods For Designating Dangerous Waste WAC 173-303-090 & -100*, (Table 2-2) will be performed during the first 1-year monitoring period at this well. Sampling for these constituents will be discontinued after completion of the first year of monitoring. At the discretion of DOE-RL, monitoring for constituents identified in Table 2-2 (or a subset of the constituents) may continue at newly installed wells beyond the 1-year period if deemed necessary.

e. Proposed wells WMA_TX-TY_PW1 and WMA_TX-TY_PW2 are the only upgradient wells identified for the network. Because these two wells are not yet installed, existing upgradient wells will be included for monitoring until the new upgradient wells are ready for sampling. Evaluation of the previous well network identified that wells 299-W15-44 and 299-W15-765 are upgradient; therefore, these wells will be used for upgradient monitoring. After WMA_TX-TY_PW1 and WMA_TX-TY_PW2 are ready for sampling, wells 299-W15-44 and 299-W15-765 will be removed from the network.

DOE-RL = U.S. Department of Energy, Richland Operations Office

N/A = not applicable

Q = to be sampled quarterly

WAC = *Washington Administrative Code*

Y = well is, or will be, constructed as a resource protection well (WAC 173-160, “Minimum Standard for Construction and Maintenance of Wells”)

Table 2-2. Dangerous Waste Constituents for 1 Year of Monitoring at Wells Added to the Network

Constituent	CAS Number	Constituent	CAS Number
Inorganic Constituents			
Antimony	7440-36-0	Mercury	7439-97-6
Arsenic	7440-38-2	Nickel	7440-02-0
Barium	7440-39-3	Selenium	7782-49-2
Beryllium	7440-41-7	Silver	7440-22-4
Cadmium	7440-43-9	Sulfide	18496-25-8
Chromium	7440-47-3	Thallium	7440-28-0
Cobalt	7440-48-4	Tin	7440-31-5
Copper	7440-50-8	Vanadium	7440-62-2
Cyanide	57-12-5	Zinc	7440-66-6
Lead	7439-92-1		
Volatile Organic Compounds			
1,1-Dichloroethane	75-34-3	Carbon tetrachloride	56-23-5
1,1-Dichloroethene (1,1-Dichloroethylene)	75-35-4	Chlorobenzene	108-90-7
1,1,1-Trichloroethane	71-55-6	Chloroethane	75-00-3
1,1,1,2-Tetrachloroethane	630-20-6	Chloroform	67-66-3
1,1,2-Trichloroethane	79-00-5	Chloroprene	126-99-8
1,1,2,2-Tetrachloroethane	79-34-5	Dibromochloromethane	124-48-1
1,2-Dibromo-3-chloropropane	96-12-8	p-Dichlorobenzene (1,4-Dichlorobenzene)	106-46-7
1,2-Dibromoethane	106-93-4	Dichlorodifluoromethane	75-71-8
1,2-Dichloroethane	107-06-2	Ethylbenzene	100-41-4
1,2-Dichloropropane	78-87-5	Ethyl methacrylate	97-63-2
trans-1,2-Dichloroethylene	156-60-5	Isobutanol (Isobutyl alcohol)	78-83-1
1,2,3-Trichloropropane	96-18-4	Methacrylonitrile	126-98-7
cis-1,3-Dichloropropene	10061-01-5	Methyl bromide (Bromomethane)	74-83-9
trans-1,3-Dichloropropene	10061-02-6	Methyl chloride (Chloromethane)	74-87-3
trans-1,4-Dichloro-2-butene	110-57-6	Methyl iodide (Iodomethane)	74-88-4
2-Butanone (Methyl ethyl ketone; MEK)	78-93-3	Methyl methacrylate	80-62-6
2-Propanone (Acetone)	67-64-1	Methylene bromide (Dibromomethane)	74-95-3
2-Hexanone (Methyl butyl ketone)	591-78-6	Methylene chloride	75-09-2

Table 2-2. Dangerous Waste Constituents for 1 Year of Monitoring at Wells Added to the Network

Constituent	CAS Number	Constituent	CAS Number
4-Methyl-2-pentanone (Methyl isobutyl ketone)	108-10-1	Propionitrile (Ethyl cyanide)	107-12-0
Acetonitrile (Methyl cyanide)	75-05-8	Styrene	100-42-5
Acrolein	107-02-8	Tetrachloroethene	127-18-4
Acrylonitrile	107-13-1	Toluene	108-88-3
Allyl chloride	107-05-1	Trichloroethene (TCE)	79-01-6
Benzene	71-43-2	Trichlorofluoromethane	75-69-4
Bromodichloromethane	75-27-4	Vinyl acetate	108-05-4
Bromoform	75-25-2	Vinyl chloride (Chloroethene)	75-01-4
Carbon disulfide	75-15-0	Xylenes (total)	1330-20-7
Semivolatile Organic Compounds			
1-Naphthylamine	134-32-7	Dimethyl phthalate	131-11-3
1,2-Dichlorobenzene (o-Dichlorobenzene)	95-50-1	Di-n-butyl phthalate	84-74-2
1,2,4-Trichlorobenzene	120-82-1	m-Dinitrobenzene	99-65-0
1,2,4,5-Tetrachlorobenzene	95-94-3	Di-n-octylphthalate	117-84-0
1,4-Dioxane	123-91-1	Dinoseb (2-sec-Butyl-4,6-dinitrophenol)	88-85-7
1,4-Naphthoquinone	130-15-4	Diphenylamine	122-39-4
2-Acetylaminofluorene	53-96-3	Disulfoton	298-04-4
2-Chloronaphthalene	91-58-7	Ethyl methanesulfonate	62-50-0
2-Chlorophenol	95-57-8	Famphur	52-85-7
2-Methylphenol (o-cresol)	95-48-7	Fluoranthene	206-44-0
2-Methylnaphthalene	91-57-6	9H-Fluorene (Fluorene)	86-73-7
2-Naphthylamine	91-59-8	Hexachlorobenzene	118-74-1
2-Nitrophenol (o-Nitrophenol)	88-75-5	Hexachlorobutadiene	87-68-3
2-Picoline	109-06-8	Hexachlorocyclopentadiene	77-47-4
2,3,4,6-Tetrachlorophenol	58-90-2	Hexachloroethane	67-72-1
2,4-Dichlorophenol	120-83-2	Hexachlorophene	70-30-4
2,4-Dimethylphenol	105-67-9	Hexachloropropene	1888-71-7
2,4-Dinitrophenol	51-28-5	Indeno(1,2,3-cd)pyrene	193-39-5
2,4-Dinitrotoluene	121-14-2	Isodrin	465-73-6
2,4,5-Trichlorophenol	95-95-4	Isophorone	78-59-1

Table 2-2. Dangerous Waste Constituents for 1 Year of Monitoring at Wells Added to the Network

Constituent	CAS Number	Constituent	CAS Number
2,4,6-Trichlorophenol	88-06-2	Isosafrole	120-58-1
2,6-Dichlorophenol	87-65-0	Kepone	143-50-0
2,6-Dinitrotoluene	606-20-2	Methapyrilene	91-80-5
3-Methylcholanthrene	56-49-5	Methyl methanesulfonate	66-27-3
3-Methylphenol (m-Cresol)	108-39-4	Methyl parathion	298-00-0
4-Methylphenol (p-cresol)	106-44-5	Naphthalene	91-20-3
3,3′-Dichlorobenzidine	91-94-1	Nitrobenzene	98-95-3
3,3′-Dimethylbenzidine	119-93-7	o-Nitroaniline (2-Nitroaniline)	88-74-4
4-Aminobiphenyl	92-67-1	m-Nitroaniline (3-Nitroaniline)	99-09-2
4-Bromophenyl phenyl ether	101-55-3	p-Nitroaniline (4-Nitroaniline)	100-01-6
4-Chloro-3-methylphenol (p-Chloro-m-cresol)	59-50-7	p-Nitrophenol (4-Nitrophenol)	100-02-7
4-Chlorophenyl phenyl ether	7005-72-3	n-Nitrosodi-n-butylamine	924-16-3
4-Nitroquinoline 1-oxide	56-57-5	n-Nitrosodiethylamine	55-18-5
4,6-Dinitro-o-cresol (4,6-Dinitro-2-methyl phenol)	534-52-1	n-Nitrosodimethylamine	62-75-9
5-Nitro-o-toluidine	99-55-8	n-Nitrosodiphenylamine	86-30-6
7,12-Dimethylbenz[a]anthracene	57-97-6	n-Nitroso-di-n-dipropylamine (n-Nitrosodipropylamine; Di-n-propylnitrosamine)	621-64-7
Acenaphthene	83-32-9	n-Nitrosomethylethalamine	10595-95-6
Acenaphthylene	208-96-8	n-Nitrosomorpholine	59-89-2
Acetophenone	98-86-2	n-Nitrosopiperidine	100-75-4
Aniline	62-53-3	n-Nitrosopyrrolidine	930-55-2
Anthracene	120-12-7	Parathion	56-38-2
Aramite	140-57-8	Pentachlorobenzene	608-93-5
Benz[a]anthracene (Benzo[a]anthracene)	56-55-3	Pentachloroethane	76-01-7
Benz[e]acephenanthrylene (Benzo[b]fluoranthene)	205-99-2	Pentachloronitrobenzene	82-68-8
Benzo[k]fluoranthene	207-08-9	Pentachlorophenol	87-86-5
Benzo[ghi]perylene	191-24-2	Phenacetin	62-44-2
Benzo[a]pyrene	50-32-8	Phenanthrene	85-01-8
Benzyl alcohol	100-51-6	Phenol	108-95-2
Bis(2-chloroethoxy)methane	111-91-1	p-Phenylenediamine	106-50-3

Table 2-2. Dangerous Waste Constituents for 1 Year of Monitoring at Wells Added to the Network

Constituent	CAS Number	Constituent	CAS Number
Bis(2-chloroethyl)ether	111-44-4	Phorate	298-02-2
Bis(2-chloro-1-methylethyl) ether (2,2'-Oxybis(1-chloropropane))	108-60-1	Pronamide	23950-58-5
Bis(2-ethylhexyl) phthalate	117-81-7	Pyrene	129-00-0
Butylbenzylphthalate	85-68-7	Pyridine	110-86-1
p-Chloroaniline (4-Chloroaniline)	106-47-8	Safrole	94-59-7
Chlorobenzilate	510-15-6	Tetraethyl dithiopyrophosphate	3689-24-5
Chrysene	218-01-9	o-Toluidine	95-53-4
Diallate	2303-16-4	O,O,O-Triethyl phosphorothioate	126-68-1
Dibenz[a,h]anthracene	53-70-3	sym-Trinitrobenzene	99-35-4
Dibenzofuran	132-64-9	Aroclor 1016	12674-11-2
m-Dichlorobenzene (1,3-Dichlorobenzene)	541-73-1	Aroclor 1221	11104-28-2
Diethyl phthalate	84-66-2	Aroclor 1232	11141-16-5
O,O-Diethyl O-2-pyrazinyl phosphorothioate	297-97-2	Aroclor 1242	53469-21-9
Dimethoate	60-51-5	Aroclor 1248	12672-29-6
p-(Dimethylamino)azobenzene	60-11-7	Aroclor 1254	11097-69-1
alpha, alpha-Dimethylphenethylamine	122-09-8	Aroclor 1260	11096-82-5
Pesticides			
4,4′-DDD	72-54-8	Endosulfan I	959-98-8
4,4′-DDE	72-55-9	Endosulfan II	33213-65-9
4,4′-DDT	50-29-3	Endosulfan sulfate	1031-07-8
Aldrin	309-00-2	Endrin	72-20-8
alpha-BHC	319-84-6	Endrin aldehyde	7421-93-4
beta-BHC	319-85-7	Heptachlor	76-44-8
delta-BHC	319-86-8	Heptachlor epoxide	1024-57-3
gamma-BHC (Lindane)	58-89-9	Methoxychlor	72-43-5
Chlordane	57-74-9	Toxaphene	8001-35-2
Dieldrin	60-57-1		
Herbicides			
2,4-D; 2,4-Dichlorophenoxyacetic acid	94-75-7	Silvex; 2,4,5-TP	93-72-1
2,4,5-T; 2,4,5-Trichlorophenoxyacetic acid	93-76-5		

Table 2-2. Dangerous Waste Constituents for 1 Year of Monitoring at Wells Added to the Network

Constituent	CAS Number	Constituent	CAS Number
Polychlorinated Dibenzodioxins and Polychlorinated Dibenzofurans			
2,3,7,8-Tetrachlorodibenzo-p-dioxin	1746-01-6	Polychlorinated dibenzofurans	N/A
Polychlorinated dibenzo-p-dioxins	N/A		

Note: This table identifies the dangerous waste constituents listed in Appendix 5 of Ecology Publication No. 97-407, *Chemical Test Methods For Designating Dangerous Waste WAC 173-303-090 & -100*.

CAS = Chemical Abstracts Service

N/A = not applicable

2.1.1 Sample Schedule Impacts from Well Maintenance and Sampling Logistics

Well maintenance (e.g., pump repairs, periodic well cleaning and redevelopment) and sampling logistics resulting from multiple factors including environmental (i.e., inclement weather) and access restrictions (i.e., heightened fire danger, area access restriction due to work by other Hanford Site contractors such as in the tank farms) sometimes delay scheduled sampling events. Sampling events are scheduled by month. The Field Work Supervisor (FWS) determines the sampling schedule for a well within a given month. If a well cannot be sampled at the times determined by the FWS, then the FWS and Sample Management and Reporting group, along with the project scientist, consult to determine how best to recover or reschedule the sampling event as close to the original sampling date as possible. If it is observed during the pre-sampling walkdown that one or more network wells cannot be sampled, then sampling of the well network does not begin and management is notified. Depending on the situation, the network sampling is rescheduled as soon as feasible, to meet the schedule set forth in this plan. In some cases, it may not be obvious that sampling cannot be performed until a well is accessed (e.g., an issue with a pump).

Missed sampling events that are not rescheduled within the same month are given top priority when scheduling sampling for the following month. In the event that a sampling delay has occurred and the representativeness of the samples is in question, DOE-RL and Ecology may agree to resampling wells. DOE-RL will provide informal notification to Ecology if sampling of the network is expected to be delayed for longer than 4 weeks. Ecology may provide input in a timely fashion to DOE-RL on how to proceed. Missed or cancelled sampling events are reported to DOE-RL and are documented in the annual Hanford Site RCRA groundwater monitoring report (e.g., DOE/RL-2017-65, *Hanford Site RCRA Groundwater Monitoring Report for 2017*).

2.1.2 Well Casing Corrosion

Groundwater chemistry is routinely reviewed and evaluated. If the groundwater chemistry data for a well demonstrate a consistent upward trend over time for stainless steel corrosion constituents (nickel, iron, chromium, and manganese) in proportionate concentrations as found in stainless steel, it may be an indicator of corrosion. These data are used to provide a better understanding of the potential condition of the network wells and are used for information only.

2.2 Monitoring Well Network

The groundwater well network identified for interim status monitoring of WMA TX-TY is the same as that proposed for final status monitoring in SGW-60576 and consists of two upgradient wells (proposed wells WMA_TX-TY_PW1 and WMA_TX-TY_PW2 [D0020 and D0021]) and seven downgradient wells (299-W10-26, 299-W10-27, 299-W14-13, 299-W14-14, 299-W14-15, 299-W14-18, and 299-W14-19) (Section 9.3 in SGW-60576). The network wells were selected through the methodology presented in Chapters 5 through 7 of SGW-60576, based on known groundwater conditions.

The results of groundwater simulations in SGW-60576 indicated that wells 299-W15-44 and 299-W15-765 were upgradient of WMA TX-TY (Section 7.3 in SGW-60576). However, wells 299-W15-44 and 299-W15-765 are in close proximity to 200 West Area pump and treat system extraction wells. Because of groundwater flow to the extraction wells, wells 299-W15-44 and 299-W15-765 were not considered appropriate upgradient monitoring locations, and two proposed upgradient wells (WMA_TX-TY_PW1 and WMA_TX-TY_PW2 [D0020 and D0021]) were identified for the WMA TX-TY monitoring network (Section 7.4 in SGW-60576). Since the proposed upgradient wells are not yet installed, the wells identified as upgradient in SGW-60576 (299-W15-44 and 299-W15-765) will be used as upgradient wells in this monitoring plan until the new upgradient wells are ready for sampling. After WMA_TX-TY_PW1 and WMA_TX-TY_PW2 (D0020 and D0021) are ready for sampling, wells 299-W15-44 and 299-W15-765 will be removed from the network.

The groundwater flow direction at WMA TX-TY is to the east (Section 9.3 in SGW-60576). Specific details regarding the selection of each of the well locations are presented in Sections 9.3.1 through 9.3.9 of SGW-60576. Figure 2-1 presents the groundwater monitoring network to be utilized in this plan. Information on the wells comprising the network is summarized in Table 2-3.

If a well is within approximately 2 years of going dry, a replacement well is proposed; such wells that are proposed for installation at the Hanford Site are negotiated annually by Ecology, DOE, and EPA under Tri-Party Agreement Milestone M-24-00 (Ecology et al., 1989).

Construction details and pertinent information for the wells are provided in Appendix C.

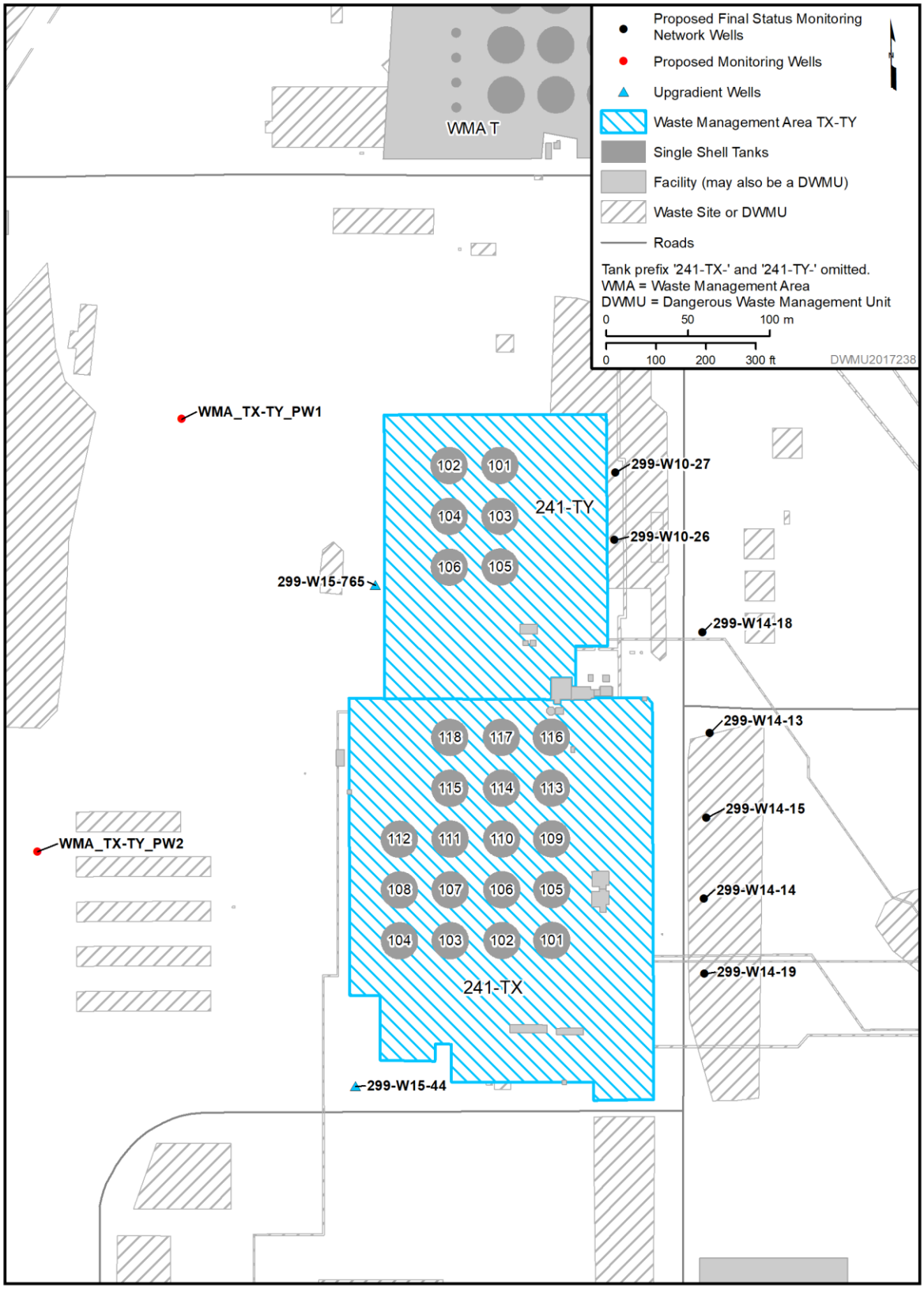

Figure 2-1. WMA TX-TY Monitoring Well Network

Table 2-3. Attributes for Wells in the WMA TX-TY Groundwater Monitoring Network

Well Name	Completion Date	Easting[a] (m)	Northing[a] (m)	Top of Casing Elevation (m [ft]) (NAVD88)	Water Table Elevation (m [ft]) (NAVD88)	Depth to Water (m [ft] bgs)	Depth of Water in Screen (m [ft])	Water-Level Date
299-W10-26	8/25/1998	566843.40	136400.59	205.45 (674.05)	130.81 (429.18)	73.86 (242.32)	2.99 (9.81)	10/25/2018
299-W10-27	3/23/2001	566843.97	136441.78	205.62 (674.61)	130.84 (429.25)	74.06 (242.99)	3.97 (13.01)	10/25/2018
299-W14-13	8/31/1998	566901.72	136282.38	205.11 (672.93)	129.41 (424.56)	74.94 (245.87)	1.79 (5.86)	10/25/2018
299-W14-14	11/12/1998	566898.39	136181.05	205.43 (673.98)	130.24 (427.28)	74.39 (244.05)	2.42 (7.95)	5/17/2018
299-W14-15	11/8/2000	566899.69	136230.65	205.35 (673.72)	130.23 (427.27)	74.35 (243.94)	3.26 (10.68)	8/15/2018
299-W14-18	11/1/2001	566897.47	136344.15	205.02 (672.64)	130.1 (426.83)	74.16 (243.32)	2.97 (9.73)	10/25/2018
299-W14-19	11/13/2002	566898.60	136135.06	205.61 (674.57)	130.51 (428.2)	74.39 (244.05)	4.41 (14.46)	8/16/2018
299-W15-44[b]	10/23/2002	566685.02	136066.47	204.89 (672.21)	132.38 (434.32)	71.79 (235.52)	4.79 (15.73)	8/16/2018
299-W15-765[b]	10/4/2001	566697.02	136373.06	205.3 (673.55)	131.58 (431.69)	72.93 (239.26)	4.8 (15.74)	8/16/2018
WMA_TX-TY_PW1 (D0020)	TBD	566578.6	136474.8	TBD	TBD	TBD	TBD	TBD

Table 2-3. Attributes for Wells in the WMA TX-TY Groundwater Monitoring Network

Well Name	Completion Date	Easting[a] (m)	Northing[a] (m)	Top of Casing Elevation (m [ft]) (NAVD88)	Water Table Elevation (m [ft]) (NAVD88)	Depth to Water (m [ft] bgs)	Depth of Water in Screen (m [ft])	Water-Level Date
WMA_TX-TY_PW2 (D0021)	TBD	566490.1	136210.0	TBD	TBD	TBD	TBD	TBD

Reference: NAVD88, *North American Vertical Datum of 1988.*

Note: Proposed well coordinates are subject to modification based on final well location survey.

a. Coordinates are in Washington State Plane (south zone), NAD83, *North American Datum of 1983*; 1991 adjustment.

b. Proposed wells WMA_TX-TY_PW1 and WMA_TX-TY_PW2 (D0020 and D0021) are the only upgradient wells in the network. Because the proposed upgradient wells are not yet installed, upgradient wells 299-W15-44 and 299-W15-765 will be used in this monitoring plan until the new upgradient wells are ready for sampling. After WMA-TX-TY_PW1 and WMA_TX-TY_PW2 (D0020 and D0021) are ready for sampling, wells 299-W15-44 and 299-W15-765 will be removed from the network.

bgs = below ground surface

TBD = to be determined. Information will be obtained after well construction.

2.3 Differences Between This Plan and Previous Plan

Table 2-4 identifies the main differences between this plan and the previous groundwater monitoring plan.

Table 2-4. Main Differences Between this Monitoring Plan and Previous Monitoring Plan

Type of Change	Previous Plan*	Current Plan	Justification Summary
Constituents	RCRA dangerous constituent: hexavalent chromium	Dangerous waste constituent: chromium	Clarified that chromium is the dangerous waste, with hexavalent chromium analysis included as a supporting constituent
	Supporting parameters: alkalinity, anions, and metals	Supporting constituents: same, with analysis for hexavalent chromium	Includes analysis for dissolved chromium
	Field parameters: dissolved oxygen, pH, specific conductance, temperature, and turbidity	Field parameters: same, with addition of water level	Clarified that water level measurements are required
	Assessment constituents: constituents identified in RPP-23403 that are also identified in Appendix 5 of Ecology Publication 97-407 were sampled to determine if groundwater quality had been impacted by the unit	Assessment constituents: none	Sampling for assessment constituents was completed
		Sampling at wells added to the network (WMA_TX-TY_PW1 and WMA_TX-TY_PW2 [D0020, D0021]): Constituents identified in Appendix 5 of Ecology Publication 97-407	Sampling will evaluate for the presence of dangerous waste constituents or inadvertent contamination from the well drilling process

Table 2-4. Main Differences Between this Monitoring Plan and Previous Monitoring Plan

Type of Change	Previous Plan*	Current Plan	Justification Summary
Sampling frequency	RCRA dangerous constituent, supporting parameters, field parameters: annually at upgradient wells; quarterly, semiannually, annually, or biennially at downgradient wells	Dangerous waste constituent, supporting constituents, field parameters: quarterly	Quarterly sampling is needed to support the quarterly determinations that are required under 40 CFR 265.93(d)(7)(i).
	Assessment constituents: constituents identified in RPP-23403 that are also identified in Appendix 5 of Ecology Publication 97-407: one sample	Assessment constituents: none	Sampling for assessment constituents was completed under the previous plan.
		Sampling at wells added to the network (WMA TX-TY_PW1 and WMA_TX-TY_PW2 [D0020, D0021]: quarterly for 1 year	Quarterly monitoring for constituents identified in Appendix 5 of Ecology Publication 97-407 for 1 year will provide sufficient samples to evaluate groundwater conditions at wells added to the network.
Well network	Upgradient: 299-W15-765	Upgradient: WMA_TX-TY_PW1 (D0020) WMA_TX-TY_PW2 (D0021) Until the two new upgradient wells are ready for sampling, the wells identified as upgradient in SGW-60576 (299-W15-44 and 299-W15-765) will be used for upgradient monitoring.	The well network for WMA TX-TY is revised to match that determined in SGW-60576 for future final status monitoring under Revision 9 of the Hanford Facility Dangerous Waste Permit. 299-W14-11 (deep well); 299-W14-16 and 299-W14-17 (far-field wells); 299-W15-44 and 299-W15-765 (located in close proximity to 200 West pump and treat extraction wells); and 299-W15-763 (provided poor upgradient coverage) were not retained for the final status well network (Section 7.4 in SGW-60576).
	Downgradient: 299-W10-26 299-W10-27 299-W14-11 299-W14-13 299-W14-14 299-W14-15 299-W14-16 (far-field) 299-W14-17 (far-field) 299-W14-18 299-W14-19 299-W15-44 299-W15-763 299-W15-765	Downgradient: 299-W10-26 299-W10-27 299-W14-13 299-W14-14 299-W14-15 299-W14-18 299-W14-19	

Table 2-4. Main Differences Between this Monitoring Plan and Previous Monitoring Plan

Type of Change	Previous Plan*	Current Plan	Justification Summary
Groundwater flow direction	East	East	No change
Type of groundwater monitoring program	Groundwater quality assessment program	Same	No change

Note: Complete reference citations are provided in Chapter 5.

*DOE/RL-2009-67, *Interim Status Groundwater Quality Assessment Plan for the Single-Shell Tank Waste Management Area TX-TY*, Rev. 1.

2.4 Sampling and Analysis Protocol

The groundwater protection regulations of WAC 173-303-400 dictate the groundwater sampling and analysis requirements applicable to interim status TSD units. The QAPjP outlining the project management structure, data generation and acquisition, analytical procedures, and quality control is provided in Appendix A. Appendix B provides the sampling protocols (e.g., sampling methods, sample handling and custody, management of waste, and health and safety considerations).

This page intentionally left blank.

3 Data Evaluation and Reporting

This chapter discusses the evaluation and interpretation of data.

3.1 Data Review

The data review and verification tasks are discussed in the QAPjP (Appendix A).

3.2 Data Evaluation

Sample results will be evaluated to determine groundwater flow rate and direction and to further assess the contribution of the unit to existing groundwater contamination. This evaluation will be conducted using the Central Plateau Groundwater Model (CP-47631, *Model Package Report: Central Plateau Groundwater Model Version 8.4.5*) as described in ECF-200W-17-0070, *Groundwater Flow and Migration Calculations to Support Assessment of the Hanford Central Plateau 200 West Area Facilities Monitoring Network*, for 200 West Area units or the Tikhonov Regularized Inverse Method (ECF-200E-18-0066, *Groundwater Flow and Migration Calculations to Assess Monitoring Networks in the 200 East Area Dangerous Waste Management Units*) for 200 East Area units. The flow rate and direction will be evaluated in the context of groundwater in the surrounding area (e.g., plume maps in DOE/RL-2017-66, *Hanford Site Groundwater Monitoring Report for 2017*). The outcome of this evaluation, along with contaminant concentrations from hydraulically upgradient and downgradient wells, provide context to the potential contribution from the unit.

3.3 Interpretation

Data are used to interpret groundwater conditions at WMA TX-TY. Interpretive techniques may include the following:

- **Hydrographs:** Graph water levels versus time to determine decreases, increases, seasonal, or manmade fluctuations in groundwater levels.
- **Water table maps:** Use water table elevations from multiple wells to construct contour maps and to estimate flow directions. Groundwater flow is assumed to be perpendicular to the potential lines on the maps.
- **Trend plots:** Graph concentrations of constituents versus time to determine increases, decreases, and fluctuations. May be used in tandem with hydrographs and/or water table maps to determine if concentrations relate to changes in water level or groundwater flow directions.
- **Plume maps:** Map distributions of chemical constituent concentrations in the aquifer to determine the extent of contamination. Changes in plume distribution over time assist in determining plume movement and direction of groundwater flow.
- **Contaminant ratios:** Illustrate the relative abundances of contaminants from previously characterized Hanford Site-related processes and sources. Comparison of these ratios in groundwater can sometimes be used to distinguish among different sources of contamination (e.g., a specific process and its associated facility). Ratios may provide evidence of continuing source contamination, thereby linking contamination with a specific facility under monitoring. Evaluation of contaminant ratios in concentration trends may be used to demonstrate when facility-specific contamination no longer affects underlying groundwater.

3.4 Annual Determination of Monitoring Network

Groundwater monitoring requirements include an annual evaluation of the network to determine if it remains adequate to monitor the facility's impact on the quality of the groundwater in the uppermost aquifer underlying the facility (40 CFR 265.93(f)). The network must include at least one upgradient and at least three downgradient wells in the uppermost aquifer (40 CFR 265.91(a)(1) and (2)).

The groundwater monitoring network in this plan will continue to be re-evaluated to ensure that it is adequate to monitor any changing hydrogeologic conditions beneath the unit. If flow changes are observed, the WMA TX-TY contaminant migration conceptual model and geochemical trends will be re-evaluated to determine network efficiency and any necessary modifications required for the network.

Water-level measurements will continue to be collected during each sampling event. An additional and more comprehensive set of water-level measurements is made annually for selected wells on the Hanford Site, these data may be found in the annual Hanford Site RCRA groundwater monitoring reports (e.g., DOE/RL-2017-65).

3.5 Recordkeeping, Reporting, and Notification

This plan, the first determination report, and any subsequent determination reports will be placed in the facility operating record and be maintained in accordance with the requirements of 40 CFR 265.93(d)(2) and (5), and (e). Records of the analyses and evaluations specified in this plan will be kept in accordance with the requirements of 40 CFR 265.94(b)(1).

The results of groundwater quality assessment monitoring are reported annually in accordance with the requirements of 40 CFR 265.94(b)(2). Reporting will be made in the annual Hanford Site RCRA groundwater monitoring reports (e.g., DOE/RL-2017-65) by March 1.

In accordance with 40 CFR 265.93(d)(7)(i), continued determinations of (1) the rate and extent of migration and (2) the concentrations dangerous wastes/dangerous waste constituents that have entered the groundwater from WMA TX-TY will be made quarterly. As discussed in Section 1.1, a phase I assessment report for WMA T and WMA TX-TY (PNNL-11809) identified WMA TX-TY as the most likely source for elevated nitrate, calcium, and magnesium in groundwater at that WMA. A second assessment report (PNNL-14004) identified elevated chromium in the groundwater and did not eliminate WMA TX-TY as a source of chromium contamination. Therefore, chromium is a dangerous waste/dangerous waste constituent from the facility that is subject to continued determinations under 40 CFR 265.93(d)(7)(i). Such quarterly determinations will be reported within 15 days of completion of the quarterly report, submitted informally (i.e., email), and placed in the operating record.

4 Implementation Schedule

The schedule for sampling is provided in Chapter 2 of this document. This groundwater quality assessment plan is a continuation of an existing groundwater quality assessment program at WMA TX-TY and will be implemented within 4 months of the document being placed in the operating record.

This page intentionally left blank.

5 References

10 CFR 962, "Byproduct Material," *Code of Federal Regulations*. Available at: http://www.ecfr.gov/cgi-bin/text-idx?SID=24aad4966ac52acbeba416c2c1114889&mc=true&node=pt10.4.962&rgn=div5.

40 CFR 265, "Interim Status Standards for Owners and Operators of Hazardous Waste Treatment, Storage, and Disposal Facilities," *Code of Federal Regulations*. Available at: http://www.ecfr.gov/cgi-bin/text-idx?SID=2cd7465519114fb3472b4864a0e3c42b&node=pt40.26.265&rgn=div5.

265.90, "Applicability."

265.91, "Ground-Water Monitoring System."

265.92, "Sampling and Analysis."

265.93, "Preparation, Evaluation, and Response."

265.94, "Recordkeeping and Reporting."

Subpart F, "Ground-Water Monitoring."

Atomic Energy Act of 1954, as amended, 42 USC 2011, Pub. L. 83-703, 68 Stat. 919. Available at: https://www.energy.gov/sites/prod/files/2017/10/f38/Atomic%20Energy%20Act%20of%201954%20%28AEA%29%20in%20U.S.C..pdf.

CP-47631, 2017, *Model Package Report: Central Plateau Groundwater Model Version 8.4.5*, Rev. 4, CH2M HILL Plateau Remediation Company, Richland, Washington. Available at: https://pdw.hanford.gov/arpir/pdf.cfm?accession=0066449H.

DOE/RL-2009-67, 2011, *Interim Status Groundwater Quality Assessment Plan for the Single-Shell Tank Waste Management Area TX-TY*, Rev. 0, U.S. Department of Energy, Richland Operations Office, Richland, Washington. Available at: https://pdw.hanford.gov/arpir/pdf.cfm?accession=1103070710.

DOE/RL-2009-67, 2012, *Interim Status Groundwater Quality Assessment Plan for the Single-Shell Tank Waste Management Area TX-TY*, Rev. 1, U.S. Department of Energy, Richland Operations Office, Richland, Washington. Available at: https://pdw.hanford.gov/arpir/pdf.cfm?accession=0091411.

DOE/RL-2017-65, 2018, *Hanford Site RCRA Groundwater Monitoring Report for 2017*, Rev. 0, U.S. Department of Energy, Richland Operations Office, Richland, Washington. Available at: https://pdw.hanford.gov/arpir/pdf.cfm?accession=0066266H.

DOE/RL-2017-66, 2018, *Hanford Site Groundwater Monitoring Report for 2017*, Rev. 0, U.S. Department of Energy, Richland Operations Office, Richland, Washington. Available at: https://pdw.hanford.gov/arpir/pdf.cfm?accession=0064709H.

ECF-200E-18-0066, 2018, *Groundwater Flow and Migration Calculations to Assess Monitoring Networks in the 200 East Area Dangerous Waste Management Units*, Rev. 0, CH2M HILL Plateau Remediation Company, Richland, Washington. Available at: https://pdw.hanford.gov/arpir/pdf.cfm?accession=0064076H.

ECF-200W-17-0070, 2018, *Groundwater Flow and Migration Calculations to Support Assessment of the Hanford Central Plateau 200 West Area Facilities Monitoring Network*, Rev. 0, CH2M HILL Plateau Remediation Company, Richland, Washington. Available at: https://pdw.hanford.gov/arpir/pdf.cfm?accession=0065259H.

Ecology Publication No. 97-407, 2014, *Chemical Test Methods For Designating Dangerous Waste WAC 173-303-090 & -100*, Hazardous Waste and Toxics Reduction Program, Washington State Department of Ecology, Olympia, Washington. Available at: https://fortress.wa.gov/ecy/publications/documents/97407.pdf.

Ecology, EPA, and DOE, 1989, *Hanford Federal Facility Agreement and Consent Order*, 2 vols., as amended, Washington State Department of Ecology, U.S. Environmental Protection Agency, and U.S. Department of Energy, Olympia, Washington. Available at: http://www.hanford.gov/?page=81.

NAD83, 1991, *North American Datum of 1983*, as revised, National Geodetic Survey, Federal Geodetic Control Committee, Silver Spring, Maryland. Available at: http://www.ngs.noaa.gov/.

NAVD88, 1988, *North American Vertical Datum of 1988*, as revised, National Geodetic Survey, Federal Geodetic Control Committee, Silver Spring, Maryland. Available at: http://www.ngs.noaa.gov/.

PNNL-11809, 1998, *Results of Phase I Groundwater Quality Assessment for Single-Shell Tank Waste Management Areas T and TX-TY at the Hanford Site*, Pacific Northwest Laboratory, Richland, Washington. Available at: http://pdw.hanford.gov/arpir/index.cfm/viewDoc?accession=D198175199.

PNNL-12072, *RCRA Assessment Plan for Single-Shell Tank Waste Management Area TX-TY at the Hanford Site*, Pacific Northwest Laboratory, Richland, Washington. Available at: https://pdw.hanford.gov/arpir/pdf.cfm?accession=D1665266.

PNNL-14004, *RCRA Groundwater Quality Assessment Report for Single-Shell Tank Waste Management Area TX-TY (January 1998 through December 2001*, Pacific Northwest Laboratory, Richland, Washington. Available at: https://pdw.hanford.gov/arpir/pdf.cfm?accession=D2756624.

RCW 70.105, "Hazardous Waste Management," as amended, *Revised Code of Washington*, Olympia, Washington. Available at: http://apps.leg.wa.gov/RCW/default.aspx?cite=70.105.

Resource Conservation and Recovery Act of 1976, 42 USC 6901, et seq. Available at: https://elr.info/sites/default/files/docs/statutes/full/rcra.pdf.

RPP-23403, 2016, *Single-Shell Tank Component Closure Data Quality Objectives*, Rev. 6, Washington River Protection Solutions, Richland, Washington. Available at: https://pdw.hanford.gov/arpir/pdf.cfm?accession=0075162H.

SGW-60576, 2018, *Engineering Evaluation Report for Single Shell Tank Waste Management Area TX-TY Groundwater Monitoring*, Rev. 0, U.S. Department of Energy, Richland Operations Office, Richland, Washington. Available at: https://pdw.hanford.gov/arpir/pdf.cfm?accession=0064670H.

WA7890008967, *Hanford Facility Resource Conservation and Recovery Act (RCRA) Permit, Dangerous Waste Portion for the Treatment, Storage, and Disposal of Dangerous Waste*, Revision 8c, as amended, Washington State Department of Ecology. Available at: https://fortress.wa.gov/ecy/nwp/permitting/hdwp/rev/8c/index.html.

WAC 173-160, "Minimum Standards for Construction and Maintenance of Wells," *Washington Administrative Code*, Olympia, Washington. Available at: http://apps.leg.wa.gov/WAC/default.aspx?cite=173-160.

WAC 173-303, "Dangerous Waste Regulations," *Washington Administrative Code*, Olympia, Washington. Available at: http://apps.leg.wa.gov/WAC/default.aspx?cite=173-303.

303-400, "Interim Status Facility Standards."

303-645, "Releases from Regulated Units."

WHC-SD-EN-AP-012, 1989, *40 CFR 265 Interim-Status Ground-Water Monitoring Plan for the Single-Shell Tanks*, Rev. 0, Westinghouse Hanford Company, Richland, Washington. Available at: https://pdw.hanford.gov/arpir/pdf.cfm?accession=D195063122.

WHC-SD-EN-AP-132, 1993, *Interim-Status Groundwater Quality Assessment Plan for the Single Shell Tank Waste Management Areas T and TX-TY*, Rev. 0, Westinghouse Hanford Company, Richland, Washington. Available at: https://pdw.hanford.gov/arpir/pdf.cfm?accession=0069096H.

This page intentionally left blank.

Appendix A

Quality Assurance Project Plan

This page intentionally left blank.

Contents

A1 Introduction A-1

A2 Project Management A-1

A2.1 Project/Task Organization A-1

A2.1.1 DOE-RL Manager A-1

A2.1.2 DOE-RL Project Lead A-1

A2.1.3 Soil and Groundwater Remediation Project Remedy Selection and Implementation Director A-2

A2.1.4 Project Delivery Manager for Groundwater Science A-2

A2.1.5 Sample Management and Reporting A-3

A2.1.6 Field Sample Operations A-3

A2.1.7 Quality Assurance A-3

A2.1.8 Environmental Compliance Officer A-3

A2.1.9 Health and Safety A-3

A2.1.10 Waste Management A-4

A2.1.11 Analytical Laboratories A-4

A2.2 Problem Definition/Background A-4

A2.3 Project/Task Description A-4

A2.4 Quality Assurance Objectives and Criteria A-4

A2.5 Documents and Records A-8

A3 Data Generation and Acquisition A-10

A3.1 Analytical Method Requirements A-10

A3.2 Field Analytical Methods A-10

A3.3 Quality Control A-11

A3.3.1 Field Quality Control Samples A-17

A3.3.2 Laboratory Quality Control Samples A-18

A3.4 Measurement Equipment A-20

A3.5 Instrument and Equipment Testing, Inspection, and Maintenance A-20

A3.6 Instrument/Equipment Calibration and Frequency A-20

A3.7 Inspection/Acceptance of Supplies and Consumables A-20

A3.8 Nondirect Measurements A-20

A3.9 Data Management A-20

A4 Data Review and Usability A-21

A4.1 Data Review and Verification A-21

A4.2 Data Validation A-21

A4.3 Reconciliation with User Requirements A-21

A5 References A-22

Figure

Figure A-1. Project Organization A-2

Tables

Table A-1. Data Quality Indicators A-5
Table A-2. Change Control for Monitoring Plans A-8
Table A-3. QC Samples A-11
Table A-4. Field and Laboratory QC Elements and Acceptance Criteria A-12
Table A-5. Preservation and Holding Time Guidelines for Laboratory Analyses A-18

Terms

DOE	U.S. Department of Energy
DOE-RL	U.S. Department of Energy, Richland Operations Office
DQA	data quality assessment
DQI	data quality indicator
DUP	duplicate (laboratory)
DWMU	dangerous waste management unit
EB	equipment blank
ECO	Environmental Compliance Officer
Ecology	Washington State Department of Ecology
EPA	U.S. Environmental Protection Agency
FSO	Field Sample Operations
FTB	full trip blank
FWS	Field Work Supervisor
FXR	field transfer blank
HASQARD	*Hanford Analytical Services Quality Assurance Requirements Document*
HEIS	Hanford Environmental Information System
LCS	laboratory control sample
MB	method blank
MS	matrix spike
MSD	matrix spike duplicate
QA	quality assurance
QAPjP	quality assurance project plan
QC	quality control
S&GRP	Soil and Groundwater Remediation Project
SMR	Sample Management and Reporting
SPLIT	field split
SUR	surrogate
Tri-Party Agreement	*Hanford Federal Facility Agreement and Consent Order*
Tri-Party Agreement Action Plan	*Hanford Federal Facility Agreement and Consent Order Action Plan*

This page intentionally left blank.

A1 Introduction

A quality assurance project plan (QAPjP) establishes the quality requirements for environmental data collection. It includes planning, implementation, and assessment of sampling tasks, field measurements, laboratory analysis, and data review. This appendix describes the applicable environmental data collection requirements and controls based on the quality assurance (QA) elements found in EPA/240/B-01/003, *EPA Requirements for Quality Assurance Project Plans* (EPA QA/R-5), and DOE/RL-96-68, *Hanford Analytical Services Quality Assurance Requirements Document* (HASQARD). DoD/DOE, 2018, *Department of Defense (DoD) Department of Energy (DOE) Consolidated Quality Systems Manual (QSM) for Environmental Laboratories* (or its successor programs), is also discussed. Sections 6.5 and 7.8 in Ecology et al., 1989b, *Hanford Federal Facility Agreement and Consent Order Action Plan* (Tri-Party Agreement Action Plan) require QA/quality control (QC) and sampling and analysis activities to specify QA requirements for dangerous waste management units (DWMUs), as well as for past-practice processes. This QAPjP also describes the applicable requirements and controls based on guidance provided in Ecology Publication No. 04-03-030, *Guidelines for Preparing Quality Assurance Project Plans for Environmental Studies*, and EPA/240/R-02/009, *Guidance for Quality Assurance Project Plans* (EPA QA/G-5). This QAPjP is intended to supplement the contractor's environmental QA program plan.

This QAPjP is divided into the following four chapters that describe the quality requirements and controls applicable to DWMU groundwater monitoring activities:

- Chapter A2, Project Management
- Chapter A3, Data Generation and Acquisition
- Chapter A4, Data Review and Usability
- Chapter A5, References

A2 Project Management

This chapter addresses the management approaches planned, project goals, and planned documentation.

A2.1 Project/Task Organization

Project organization (regarding routine groundwater monitoring) is described in the following sections and illustrated in Figure A-1.

A2.1.1 DOE-RL Manager

Hanford Site cleanup is the responsibility of the U.S. Department of Energy, Richland Operations Office (DOE-RL). The DOE-RL Manager is responsible for authorizing the contractor to perform activities at the Hanford Site under the *Resource Conservation and Recovery Act of 1976*, *Atomic Energy Act of 1954*, and Tri-Party Agreement (Ecology et al., 1989a, *Hanford Federal Facility Agreement and Consent Order*).

A2.1.2 DOE-RL Project Lead

The DOE-RL project lead is responsible for providing day-to-day oversight of the contractor's performance of the work scope, working with the contractor to identify and work through issues, and providing technical input to DOE-RL management.

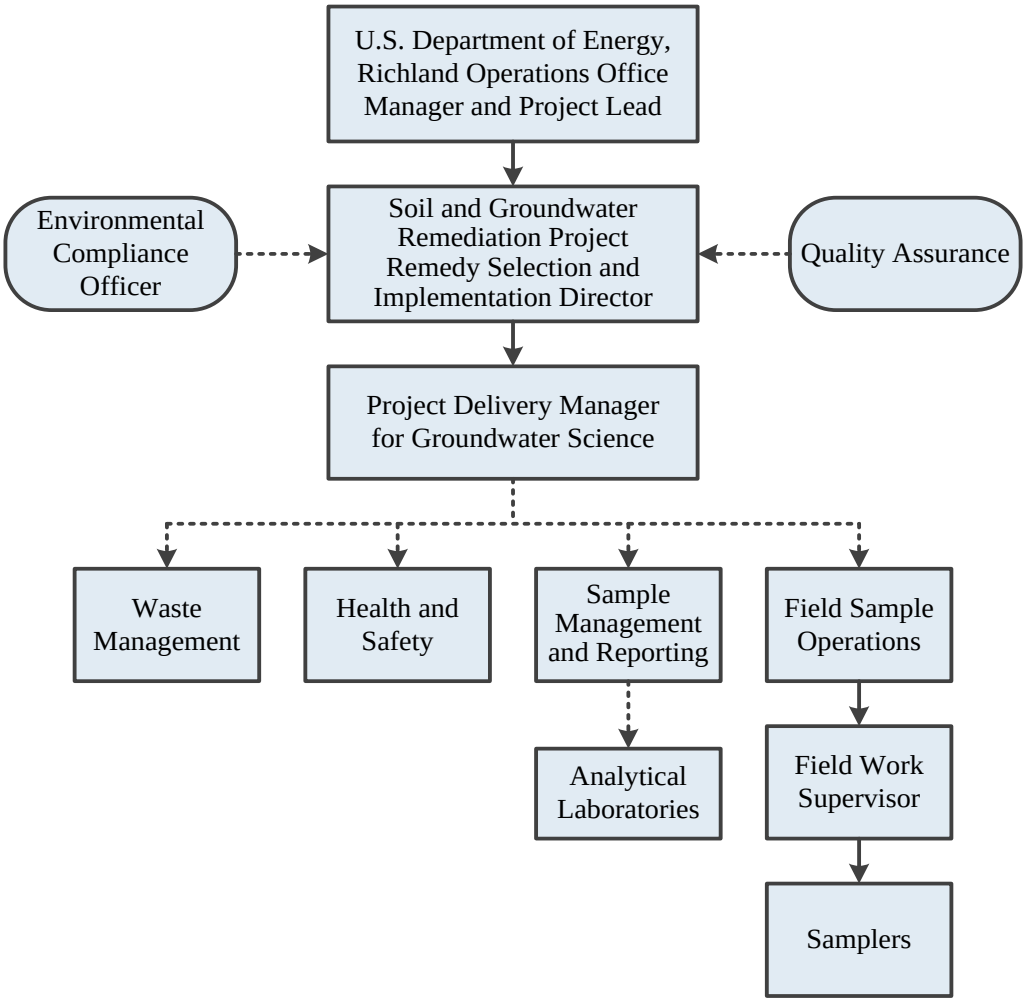

Figure A-1. Project Organization

A2.1.3 Soil and Groundwater Remediation Project Remedy Selection and Implementation Director

The Soil and Groundwater Remediation Project (S&GRP) Remedy Selection and Implementation Director provides oversight and coordinates with DOE-RL and primary contractor management in support of sampling and reporting activities. The S&GRP Remedy Selection and Implementation Director also provides support to the Project Delivery Manager for Groundwater Science to ensure that work is performed safely and cost effectively.

A2.1.4 Project Delivery Manager for Groundwater Science

The Project Delivery Manager for Groundwater Science (hereinafter referred to as the Project Delivery Manager) is responsible for direct management of activities performed to meet DWMU groundwater monitoring requirements. The Project Delivery Manager coordinates with and reports to DOE-RL and primary contractor management regarding DWMU groundwater monitoring requirements. The Project Delivery Manager (or designee) works closely with the Environmental Compliance Officer (ECO), QA, Health and Safety, and the Sample Management and Reporting (SMR) group to integrate these and other technical disciplines in planning and implementing the work scope. The Project Delivery Manager assigns scientists to provide technical expertise. The Project Delivery Manager directs assessments and surveillances.

A2.1.5 Sample Management and Reporting

The SMR group oversees offsite analytical laboratories, coordinates laboratory analytical work to ensure that laboratories conform to the requirements of this plan, and verifies that laboratories are qualified for performing Hanford Site analytical work. The SMR group generates field sampling documents, labels, and instructions for field sampling personnel and develops sample authorization forms, which provide information and instruction to the analytical laboratories. The SMR group ensures that field sampling documents are revised to reflect approved changes. This group receives analytical data from the laboratories, ensures that the data are appropriately reviewed, performs data entry into the Hanford Environmental Information System (HEIS) database, and arranges for data validation and recordkeeping. The SMR group is responsible for resolving sample documentation deficiencies or issues associated with Field Sample Operations (FSO), laboratories, or other entities. The SMR group is responsible for informing the Project Delivery Manager of any issues reported by the analytical laboratories.

A2.1.6 Field Sample Operations

FSO is responsible for planning and coordinating field sampling resources and provides the Field Work Supervisor (FWS) for routine groundwater sampling operations. The FWS directs the samplers who collect groundwater samples in accordance with this groundwater monitoring plan and corresponding standard methods and work packages. The FWS ensures that deviations from field sampling documents or issues encountered in the field are documented appropriately (e.g., in the field logbook). The FWS ensures that samplers are trained, available, and collect samples in accordance with sampling documentation. Samplers also complete field logbooks, data forms, and chain-of-custody forms (including any shipping paperwork), and enable sample delivery to the analytical laboratory.

Pre-job briefings are conducted by FSO in accordance with work management and work release requirements to evaluate activities and associated hazards by considering the following factors:

- Objective of the activities
- Individual tasks to be performed
- Hazards associated with the planned tasks
- Controls applied to mitigate the hazards
- Environment in which the job will be performed
- Facility where the job will be performed
- Equipment and material required

A2.1.7 Quality Assurance

The QA point of contact is responsible for addressing QA issues on the project and for reviewing project documents (including the QAPjP).

A2.1.8 Environmental Compliance Officer

ECOs provide technical oversight, direction, and accept project and subcontracted environmental work. They also develop mitigation measures, with the goal of minimizing adverse environmental impacts.

A2.1.9 Health and Safety

The Health and Safety organization coordinates industrial safety and health support within the project through health and safety plans, job hazard analyses, and other pertinent safety documents required by federal regulations or internal primary contractor work requirements.

A2.1.10 Waste Management

Waste Management identifies waste management sampling/characterization requirements to ensure regulatory compliance and is responsible for data interpretation to determine waste designations and profiles. Waste Management communicates policies and practices and ensures project compliance for waste storage, transportation, disposal, and tracking in a safe and cost-effective manner.

A2.1.11 Analytical Laboratories

The laboratories analyze samples in accordance with established procedures and the requirements of this plan and provide data packages containing analytical and QC results. Laboratories provide explanations of results to support data review and resolve analytical issues. Statements of work flow down quality requirements consistent with HASQARD requirements (DOE/RL-98-68). The laboratories are evaluated under the DOE Consolidated Audit Program to DoD/DOE (2018) requirements (or its successor programs) and must be accredited by the Washington State Department of Ecology (Ecology) for the analyses performed for S&GRP.

A2.2 Problem Definition/Background

The purpose of this groundwater monitoring plan is to satisfy *Washington Administrative Code* and *Code of Federal Regulations* requirements (WAC 173-303-400, "Dangerous Waste Regulations," "Interim Status Facility Standards," and 40 CFR 265, Subpart F, "Interim Status Standards for Owners and Operators of Hazardous Waste Treatment, Storage, and Disposal Facilities," "Ground-Water Monitoring") for groundwater quality assessment program monitoring. More specific information on the activities to satisfy these requirements is provided in the main text of this monitoring plan in Chapter 1 and Sections 2.1 and 2.2. Background information on monitoring is provided in the associated engineering evaluation report (Sections 2.2 and 2.4 in SGW-60576, *Engineering Evaluation Report for Single Shell Tank Waste Management Area TX-TY Groundwater Monitoring*).

A2.3 Project/Task Description

The focus of this plan is to identify dangerous wastes or dangerous waste constituents from the regulated unit that have entered the groundwater and determine the groundwater concentration and rate and extent of migration of any dangerous waste originating from Waste Management Area TX-TY, evaluate the well network, interpret analytical results, and report findings, each in accordance with 40 CFR 265.93, "Preparation, Evaluation, and Response," as promulgated by WAC 173-303-400(3)(b) and modified by (3)(c)(v) when indicated. The dangerous waste constituents and groundwater parameters to be monitored, as well as the monitoring wells and sampling frequency, are provided in the main text of this monitoring plan. Information on the collection and analyses of groundwater from the monitoring network is provided in this appendix and in Appendix B.

A2.4 Quality Assurance Objectives and Criteria

The QA objective of this plan is to ensure that the generation of analytical data of known and appropriate quality is acceptable and useful to meet the evaluation requirements stated in the monitoring plan.
In support of this objective, data descriptors known as data quality indicators (DQIs) are used to help determine the acceptability and usefulness of data to the user. Principal DQIs are precision, accuracy, representativeness, comparability, completeness, bias, and sensitivity. Table A-1 defines the DQIs for the purposes of this QAPjP.

Table A-1. Data Quality Indicators

Data Quality Indicator (QC Element)[a]	Definition	Determination Methodologies	Corrective Actions
Precision (field duplicates, laboratory sample duplicates, and matrix spike duplicates)	Precision measures the agreement among a set of replicate measurements. Field precision is assessed through the collection and analysis of field duplicates. Analytical precision is estimated by duplicate/replicate analyses, usually on laboratory control samples, spiked samples, and/or field samples. The most commonly used estimates of precision are the relative standard deviation and, when only two samples are available, the relative percent difference.	Use the same analytical instrument to make repeated analyses on the same sample. Use the same method to make repeated measurements of the same sample within a single laboratory. Acquire replicate field samples for information on sample acquisition, handling, shipping, storage, preparation, and analytical processes and measurements.	If duplicate data do not meet objective: • Evaluate apparent cause (e.g., sample heterogeneity). • Request reanalysis or remeasurement. • Qualify the data before use.
Accuracy (laboratory control samples, matrix spikes, and surrogates)	Accuracy is the closeness of a measured result to an accepted reference value. Accuracy is usually measured as a percent recovery. QC analyses used to measure accuracy include standard recoveries, laboratory control samples, spiked samples, and surrogates.	Analyze a reference material or reanalyze a sample to which a material of known concentration or amount of pollutant has been added (a spiked sample).	If recovery does not meet objective: • Qualify the data before use. • Request reanalysis or remeasurement.
Representativeness (field duplicates)	Sample representativeness expresses the degree to which data accurately and precisely represent a characteristic of a population, parameter variations at a sampling point, a process condition, or an environmental condition. It is dependent on the proper design of the sampling program and will be satisfied by ensuring that the approved plans were followed during sampling and analysis.	Evaluate whether measurements are made and physical samples collected in such a manner that the resulting data appropriately reflect the environment or condition being measured or studied.	If results are not representative of the system sampled: • Identify the reason for results not being representative. • Flag for further review. • Review data for usability. • If data are usable, qualify the data for limited use and define the portion of the system that the data represent. • If data are not usable, flag as appropriate. • Redefine sampling and measurement requirements and protocols. • Resample and reanalyze, as appropriate.

Table A-1. Data Quality Indicators

Data Quality Indicator (QC Element)[a]	Definition	Determination Methodologies	Corrective Actions
Comparability (field duplicate, field splits, laboratory control samples, matrix spikes, and matrix spike duplicates)	Comparability expresses the degree of confidence with which one data set can be compared to another. It is dependent upon the proper design of the sampling program and will be satisfied by ensuring that the approved plans are followed and that proper sampling and analysis techniques are applied.	Use identical or similar sample collection and handling methods, sample preparation and analytical methods, holding times, and quality assurance protocols.	If data are not comparable to other datasets: • Identify appropriate changes to data collection and/or analysis methods. • Identify quantifiable bias, if applicable. • Qualify the data as appropriate. • Resample and/or reanalyze if needed. • Revise sampling/analysis protocols to ensure future comparability.
Completeness (no QC element; addressed in data quality assessment)	Completeness is a measure of the amount of valid data collected compared to the amount of data planned. Measurements are considered to be valid if they are unqualified or qualified as estimated data during validation. Field completeness is a measure of the number of samples collected versus the number of samples planned. Laboratory completeness is a measure of the number of valid measurements compared to the total number of measurements planned.	Compare the number of valid measurements completed (samples collected or samples analyzed) with those established by the project's quality criteria (data quality objectives or performance/ acceptance criteria).	If dataset does not meet the completeness objective: • Identify appropriate changes to data collection and/or analysis methods. • Identify quantifiable bias, if applicable. • Resample and/or reanalyze if needed. • Revise sampling/analysis protocols to ensure future completeness.

Table A-1. Data Quality Indicators

Data Quality Indicator (QC Element)[a]	Definition	Determination Methodologies	Corrective Actions
Bias (equipment blanks, field transfer blanks, full trip blanks, laboratory control samples, matrix spikes, and method blanks)	Bias is the systematic or persistent distortion of a measurement process that causes error in one direction (e.g., the sample measurement is consistently lower than the sample's true value). Bias can be introduced during sampling, analysis, and data evaluation. Analytical bias refers to deviation in one direction (i.e., high, low, or unknown) of the measured value from a known spiked amount.	Sampling bias may be revealed by analysis of replicate samples. Analytical bias may be assessed by comparing a measured value in a sample of known concentration to an accepted reference value or by determining the recovery of a known amount of contaminant spiked into a sample (matrix spike).	For sampling bias: • Properly select and use sampling tools. • Institute correct sampling and subsampling processes to limit preferential selection or loss of sample media. • Use sample handling processes, including proper sample preservation, that limit the loss or gain of constituents to the sample media. • Analytical data that are known to be affected by either sampling or analytical bias are flagged to indicate possible bias. • Laboratories that are known to generate biased data for a specific analyte are asked to correct their methods to remove the bias as practicable. Otherwise, samples are sent to other laboratories for analysis.
Sensitivity (method detection limit, practical quantitation limit, and relative percent difference)	Sensitivity is an instrument's or method's minimum concentration that can be reliably measured (i.e., instrument detection limit or limit of quantitation).	Determine the minimum concentration or attribute to be measured by an instrument (instrument detection limit) or by a laboratory (limit of quantitation). The lower limit of quantitation[b] is the lowest level that can be routinely quantified and reported by a laboratory.	If detection limits do not meet objective: • Request reanalysis or remeasurement using methods or analytical conditions that will meet required detection or limit of quantitation. • Qualify/reject the data before use.

Source: SW-846, *Test Methods for Evaluating Solid Waste: Physical/Chemical Methods, Third Edition; Final Update V*, as amended.

a. Acceptance criteria for QC elements are provided in Table A-4.

b. For purposes of this groundwater monitoring plan, the lower limit of quantitation is interchangeable with the practical quantitation limit.

QC = quality control

Data quality is defined by the degree of rigor in the acceptance criteria assigned to DQIs. The applicable QC guidelines, DQI acceptance criteria, and levels of effort for assessing data quality are dictated by the intended use of the data and the requirements of the analytical method. DQIs are evaluated during the data usability assessment process (Section A4.3).

A2.5 Documents and Records

The Project Delivery Manager (or designee) is responsible for ensuring that the current version of the groundwater monitoring plan is used and providing any updates to field personnel. Table A-2 defines the types of changes that may impact the groundwater monitoring plan and the associated approvals, notifications, and documentation requirements. Elements of the monitoring plan that are required by 40 CFR 265.93(d)(4) cannot be changed.

Table A-2. Change Control for Monitoring Plans

Type of Change	Action	Documentation
Temporary addition of wells or constituents analyzed for, or increased sampling frequency that do not impact the requirements of 40 CFR 265.93, "Interim Status Standards for Owners and Operators of Hazardous Waste Treatment, Storage, and Disposal Facilities," "Preparation, Evaluation, and Response."	Project Delivery Manager for Groundwater Science approves temporary change; provides informal notification to DOE-RL.	SMR group's integrated groundwater monitoring schedule
Unintentional impact to groundwater monitoring plan that impacts the groundwater quality assessment program requirements of 40 CFR 265 Subpart F, including one-time missed well sampling due to operational constraints, delayed sample collection, broken pump, lost bottle set, missed sampling of groundwater constituents or parameters, or loss of samples in transit.	Project Delivery Manager for Groundwater Science provides informal notification to DOE-RL. DOE-RL provides informal notification to Ecology as appropriate.	Annual Hanford Site RCRA groundwater monitoring report
Planned change to groundwater monitoring activities, including addition or deletion of constituents analyzed for, change of sampling frequency, or changes to well network.	Project Delivery Manager for Groundwater Science obtains DOE-RL approval; revise groundwater monitoring plan as appropriate.	Annual Hanford Site RCRA groundwater monitoring report and revised groundwater monitoring plan as appropriate
Anticipated unavoidable changes.	Project Delivery Manager for Groundwater Science provides informal notification to DOE-RL; revise groundwater monitoring plan as appropriate.	Annual Hanford Site RCRA groundwater monitoring report and revised groundwater monitoring plan as appropriate

40 CFR 265, Subpart F, "Interim Status Standards for Owners and Operators of Hazardous Waste Treatment, Storage, and Disposal Facilities," "Ground-Water Monitoring."

DOE-RL = U.S. Department of Energy, Richland Operations Office

Ecology = Washington State Department of Ecology

RCRA = *Resource Conservation and Recovery Act of 1976*

SMR = Sample Management and Reporting

Logbooks and data forms are required to document field activities. The logbook must be identified with a unique project name and number. Individuals responsible for the logbooks shall be identified in the front of the logbook, and only authorized individuals may make entries into the logbooks. Logbooks will be controlled in accordance with internal work requirements and processes.

The FWS, SMR, and field crew supervisors are responsible for ensuring that field instructions are maintained and aligned with any revisions or approved changes to the groundwater monitoring plan. SMR will ensure that any deviations from the plan are reflected in revised field sampling documents for the samplers and analytical laboratory. The FWS or field crew supervisors will ensure that deviations from the plan or problems encountered in the field are documented (e.g., in the field logbook).

The Project Delivery Manager, FWS, or designee is responsible for communicating field corrective action requirements and ensuring that immediate corrective actions are applied to field activities. The Project Delivery Manager is also responsible for ensuring that project files are set up and maintained. The project files will contain project records or references to their storage locations. Project files generally include the following information:

- Operational records and logbooks
- Data forms
- Global positioning system data (a copy will be provided to SMR)
- Inspection and corrective action reports
- Field summary reports
- Interim progress reports
- Photographs
- Final reports
- Forms required by WAC 173-160, “Minimum Standards for Construction and Maintenance of Wells,” and the master drilling contract

The following records are managed and maintained by SMR personnel:

- Completed field sampling logbooks
- Groundwater sample reports and field sample reports
- Completed chain-of-custody forms
- Sample receipt records
- Laboratory data packages
- Field measurement results
- Analytical data verification and validation reports
- Analytical data case file purges (i.e., raw data purged from laboratory files) provided by offsite analytical laboratories

The laboratory is responsible for maintaining, and having available upon request for a minimum of 2 years, the following items:

- Analytical logbooks
- Raw data and QC sample records
- Standard reference material and/or proficiency test sample data
- Instrument calibration information
- Training records for employees (in regard to analytical methods)
- Laboratory state accreditation records
- Laboratory audit records

Convenience copies of laboratory analytical results are maintained in the HEIS database. Records may be stored in either electronic (e.g., in the managed records area of the Integrated Document Management System) or hardcopy format (e.g., DOE Records Holding Area). Documentation and records, regardless of medium or format, are controlled in accordance with internal work requirements and processes that ensure the accuracy and retrievability of stored records. Records required by the Tri-Party Agreement (Ecology et al., 1989a) will be managed in accordance with the requirements therein. Records of analyses required by 40 CFR 265.93(d) are to be maintained throughout the active life of a facility and post-closure care period.

Groundwater monitoring results are reported in the Hanford Site groundwater monitoring report (e.g., DOE/RL-2017-65, *Hanford Site RCRA Groundwater Monitoring Report for 2017*).

A3 Data Generation and Acquisition

This chapter addresses data generation and acquisition to ensure that the project's methods for sampling, measurement and analysis, data collection or generation, data handling, and QC activities are appropriate and documented. Requirements for instrument calibration and maintenance, supply inspections, and data management are also addressed.

A3.1 Analytical Method Requirements

Sample analytical method requirements are presented in Appendices D and E. Equivalent methods (e.g., U.S. Environmental Protection Agency [EPA] Method 300, and Method 9050 in SW-846, *Test Methods for Evaluating Solid Waste: Physical/Chemical Methods, Third Edition; Final Update V*, as amended) or updated Ecology-accredited methods (e.g., updates to SW-846) may be substituted for the methods identified in Appendices D and E. Practical quantitation limits are provided in ECF-HANFORD-18-0058, *Practical Quantitation Limits for Groundwater Environmental Samples*, as revised.

A3.2 Field Analytical Methods

Field screening and survey data will be measured in accordance with HASQARD (DOE/RL-96-68) requirements, as applicable. Field analytical methods may also be performed in accordance with manufacturer manuals. Appendix B provides further discussion on field measurements.

A3.3 Quality Control

The QC requirements specified in the plan must be followed in the field and analytical laboratory to ensure that reliable data are obtained. Field QC samples will be collected to evaluate the potential for cross-contamination and to provide information pertinent to sampling variability. Laboratory QC samples estimate the precision, bias, and matrix effects on the analytical data. Field and laboratory QC samples are summarized in Table A-3. Table A-4 provides the acceptance criteria for field and laboratory QC. Data will be qualified and flagged in the HEIS database, as appropriate.

Table A-3. QC Samples

Sample Type	Frequency[a]	Characteristics Evaluated
Field QC		
Equipment blanks	As needed. If only disposable equipment is used or equipment is dedicated to a particular well, then an equipment blank is not required; otherwise, 1 for every 20 samples[b]	Adequacy of sampling equipment decontamination and contamination from nondedicated equipment
Field duplicates	1 in 20 well trips	Precision, including sampling and analytical variability
Field splits	As needed When needed, the minimum is one for every analytical method, for analyses performed	Precision, including sampling, analytical, and interlaboratory
Field transfer blanks	One each day volatile organic compounds are sampled	Contamination from sampling site
Full trip blanks	1 in 20 well trips	Cross-contamination from containers or transportation
Analytical QC[c]		
Laboratory control samples	One per analytical batch	Laboratory accuracy
Laboratory sample duplicates	One per analytical batch	Laboratory reproducibility and precision
Matrix spikes	One per analytical batch	Matrix effect/laboratory accuracy
Matrix spike duplicates	One per analytical batch	Laboratory accuracy and precision
Method blanks	One per analytical batch	Laboratory contamination
Surrogates	Added to each sample and QC sample	Recovery/yield

Note: The information in this table does not represent Washington State Department of Ecology requirements; it is intended solely as guidance.

a. A "well trip" is defined as any time a well is accessed for sampling. For groundwater monitoring, field duplicates and full trip blanks are run at a frequency of 1 in 20 well trips (i.e., 5% of the well trips) for all groundwater monitoring wells sampled within any given month (not just those restricted to a single treatment, storage, and disposal unit). For example, if a month has 181 wells scheduled, then 10 field duplicates will be collected.

b. For portable pumps, equipment blanks are collected (1 for every 10 well trips). Whenever a new type of nondedicated equipment is used, an equipment blank will be collected each time sampling occurs until it can be shown that less frequent collection of equipment blanks is adequate to monitor the decontamination methods for the nondedicated equipment.

c. Batching across projects is allowed for similar matrices (e.g., Hanford Site groundwater).

QC = quality control

Table A-4. Field and Laboratory QC Elements and Acceptance Criteria

Analyte[a]	QC Element	Acceptance Criteria	Corrective Action
General Chemistry			
Alkalinity	MB	<MDL <5% sample concentration	Flag with "C"
	LCS	80% to 120% recovery	Flag with "o"[b]
	DUP[c]/MSD[d]	≤20% RPD	Review data[e]
	MS/MSD[d]	75% to 125% recovery	Flag with "N"
	EB, FTB	<2 times MDL	Flag with "Q"
	Field duplicate/SPLIT	≤20% RPD[c]	Flag with "Q"
Anions by ion chromatography	MB	<MDL <5% sample concentration	Flag with "C"
	LCS	80% to 120% recovery	Flag with "o"[b]
	DUP[c]/MSD[d]	≤20% RPD	Review data[e]
	MS/MSD[d]	75% to 125% recovery	Flag with "N"
	MS/MSD[d]	<MDL <5% sample concentration	Flag with "Q"
	Field duplicate/SPLIT	≤20% RPD[c]	Review data[e]
Cyanide (total)	MB	<MDL <5% sample concentration	Flag with "C"
	LCS	80% to 120% recovery	Flag with "o"[b]
	DUP[c]/MSD[d]	≤20% RPD	Review data[e]
	MS/MSD[d]	75% to 125% recovery	Flag with "N"
	EB, FTB	<MDL <5% sample concentration	Flag with "Q"
	Field duplicate	≤20% RPD[c]	Review data[e]
Sulfide	MB	<MDL <5% sample concentration	Flag with "C"
	LCS	80% to 120% recovery	Flag with "o"[b]
	DUP[c]/MSD[d]	≤20% RPD	Review data[e]
	MS/MSD[d]	75% to 125% recovery	Flag with "N"
	EB, FTB	<MDL <5% sample concentration	Flag with "Q"
	Field duplicate	≤20% RPD[c]	Review data[e]

Table A-4. Field and Laboratory QC Elements and Acceptance Criteria

Analyte[a]	QC Element	Acceptance Criteria	Corrective Action
Metals			
Inductively coupled plasma/ atomic emission spectrometry metals	MB	<MDL <5% sample concentration	Flag with "C"
	LCS	80% to 120% recovery	Flag with "o"[b]
	DUP[c]/MSD[d]	≤20% RPD	Review data[e]
	MS/MSD[d]	75% to 125% recovery	Flag with "N"
	EB, FTB	<MDL <5% sample concentration	Flag with "Q"
	Field duplicate	≤20% RPD[c]	Review data[e]
Inductively coupled plasma/ mass spectrometry metals	MB	<MDL <5% sample concentration	Flag with "C"
	LCS	80% to 120% recovery	Flag with "o"[b]
	DUP[c]/MSD[d]	≤20% RPD	Review data[e]
	MS/MSD[d]	75% to 125% recovery	Flag with "N"
	EB, FTB	<MDL <5% sample concentration	Flag with "Q"
	Field duplicate	≤20% RPD[c]	Review data[e]
Mercury by cold-vapor atomic absorption	MB	<MDL <5% sample concentration	Flag with "C"
	LCS	80% to 120% recovery	Flag with "o"[b]
	DUP[c]/MSD[d]	≤20% RPD	Review data[e]
	MS/MSD[d]	75% to 125% recovery	Flag with "N"
	EB, FTB	<MDL <5% sample concentration	Flag with "Q"
	Field duplicate	≤20% RPD[c]	Review data[e]
Hexavalent chromium	MB	<MDL <5% sample concentration	Flag with "C"
	LCS	80% to 120% recovery	Flag with "o"[b]
	DUP[c]/MSD[d]	≤20% RPD	Review data[e]
	MS/MSD[d]	75% to 125% recovery	Flag with "N"
	EB, FTB	<MDL <5% sample concentration	Flag with "Q"
	Field duplicate	≤20% RPD[c]	Review data[e]

Table A-4. Field and Laboratory QC Elements and Acceptance Criteria

Analyte[a]	QC Element	Acceptance Criteria	Corrective Action
Volatile Organic Compounds			
Volatile organics by gas chromatography/ mass spectrometry	MB	<MDL[f] <5% sample concentration	Flag with "B"
	LCS	70% to 130% recovery	Flag with "o"[b]
	DUP[c]/MSD[d]	≤20% RPD	Review data[e]
	MS/MSD[d]	70% to 130% recovery	Flag with "T"
	SUR	70% to 130% recovery	Review data[e]
	EB, FTB, FXR	<MDL[f] <5% sample concentration	Flag with "Q"
	Field duplicate	≤20% RPD[c]	Review data[e]
Semivolatile Organic Compounds			
Semivolatiles by gas chromatography or gas chromatography/mass spectrometry	MB	<MDL[f] <5% sample concentration	Flag with "B"
	LCS	70% to 130% recovery	Flag with "o"[b]
	DUP[c]/MSD[d]	≤20% RPD	Review data[e]
	MS/MSD[d]	% recovery statistically derived[g]	Flag with "T"
	SUR	% recovery statistically derived[g]	Review data[e]
	EB, FTB	<MDL[f] <5% sample concentration	Flag with "Q"
	Field duplicate	≤20% RPD[c]	Review data[e]
Polychlorinated biphenyls by gas chromatography	MB	<MDL <5% sample concentration	Flag with "B"
	LCS	70% to 130% recovery	Flag with "o"[b]
	DUP[c]/MSD[d]	≤20% RPD	Review data[e]
	MS/MSD[d]	% recovery statistically derived[g]	Flag with "N"
	SUR	% recovery statistically derived[g]	Review data[e]
	EB, FTB	<MDL <5% sample concentration	Flag with "Q"
	Field duplicate	≤20% RPD[c]	Review data[e]
Polychlorinated biphenyl congeners by high-resolution gas chromatography/high-res olution mass spectrometry	MB	<MDL[h]	Flag with "B"
	LCS	% recovery statistically derived[g]	Flag with "o"[b]
	DUP[c]	≤20% RPD	Review data[e]
	SUR	% recovery statistically derived[g]	Review data[e]
	EB, FTB	<MDL[h] <5% sample concentration	Flag with "Q"
	Field duplicate	≤20% RPD[c]	Review data[e]

Table A-4. Field and Laboratory QC Elements and Acceptance Criteria

Analyte[a]	QC Element	Acceptance Criteria	Corrective Action
Phenols by gas chromatography/ mass spectrometry	MB	<MDL <5% sample concentration	Flag with "B"
	LCS	70% to 130% recovery	Flag with "o"[b]
	DUP[c]/MSD[d]	≤20% RPD	Review data[e]
	MS/MSD[d]	% recovery statistically derived[g]	Flag with "T"
	SUR	% recovery statistically derived[g]	Review data[e]
	EB, FTB	<MDL <5% sample concentration	Flag with "Q"
	Field duplicate	≤20% RPD[c]	Review data[e]
Herbicides			
Herbicides by gas chromatography	MB	<MDL <5% sample concentration	Flag with "B"
	LCS	70% to 130% recovery	Flag with "o"[b]
	DUP[c]/MSD[d]	≤20% RPD	Review data[e]
	MS/MSD[d]	% recovery statistically derived[g]	Flag with "N"
	SUR	% recovery statistically derived[g]	Review data[e]
	EB, FTB	<MDL <5% sample concentration	Flag with "Q"
	Field duplicate	≤20% RPD[c]	Review data[e]
Pesticides			
Pesticides by gas chromatography	MB	<MDL <5% sample concentration	Flag with "B"
	LCS	70% to 130% recovery	Flag with "o"[b]
	DUP[c]/MSD[d]	≤20% RPD	Review data[e]
	MS/MSD[d]	% recovery statistically derived[g]	Flag with "N"
	SUR	% recovery statistically derived[g]	Review data[e]
	EB, FTB	<MDL <5% sample concentration	Flag with "Q"
	Field duplicate	≤20% RPD[c]	Review data[e]

Table A-4. Field and Laboratory QC Elements and Acceptance Criteria

Analyte[a]	QC Element	Acceptance Criteria	Corrective Action
Dioxins			
Dioxins by high-resolution gas chromatography/ high-resolution mass spectrometry	MB	<MDL[h] <5% sample concentration	Flag with "B"
	LCS	% recovery statistically derived[g]	Flag with "o"[b]
	DUP[c]	≤20% RPD	Review data[e]
	SUR	40% to 135% recovery	Review data[e]
	EB, FTB	<MDL[h] <5% sample concentration	Flag with "Q"
	Field duplicate	≤20% RPD[c]	Review data[e]

a. See Appendices D and E for constituent lists and analytical methods.

b. Apply with Sample Management and Reporting concurrence.

c. Applies when at least one result is greater than the laboratory PQL (chemical analyses).

d. Either a DUP or an MSD is to be analyzed to determine measurement precision (if there is insufficient sample volume, a laboratory control sample duplicate is analyzed with the acceptance criteria defaulting to the DUP/MSD criteria).

e. After review, corrective actions are determined on a case-by-case basis. Corrective actions may include a laboratory recheck or flagging the data.

f. For common laboratory contaminants such as acetone, methylene chloride, 2-butanone, toluene, and phthalate esters, the acceptance criteria is <5 times the MDL.

g. Laboratory determined, statistically derived control limits based on historical data are used here. Control limits are reported with the data.

h. MDLs for dioxin and polychlorinated biphenyl congeners are estimated.

DUP = laboratory sample duplicate
EB = equipment blank
FTB = full trip blank
FXR = field transfer blank
LCS = laboratory control sample
MB = method blank
MDL = method detection limit
MS = matrix spike
MSD = matrix spike duplicate
PQL = practical quantitation limit
QC = quality control
RPD = relative percent difference
SUR = surrogate

Data flags:

B, C = possible laboratory contamination; analyte was detected in the associated method blank

N = result may be biased; associated matrix spike result was outside the acceptance limits (except gas chromatograph/mass spectrometry)

o = associated laboratory control sample recovery was outside control limits

Q = problem with associated field QC blank; results were out of limits

T = result may be biased; associated matrix spike result was outside the acceptance limits (gas chromatograph/mass spectrometry only)

A3.3.1 Field Quality Control Samples

Field QC samples are collected to evaluate the potential for cross-contamination and provide information pertinent to field sampling variability and laboratory performance to help ensure that reliable data are obtained. Field QC samples include field duplicates, field split (SPLIT) samples, and three types of field blanks (equipment blanks [EBs], field transfer blanks [FXRs], and full trip blanks [FTBs]). Field blanks are typically prepared using high-purity reagent water[1]. The following QC samples are defined with their required frequency for collection:

- **Equipment blanks (EBs):** Reagent water passed through or poured over decontaminated sampling equipment identical to the sample set collected and placed in sample containers, as identified on the sample authorization form. EB sample bottles are placed in the same storage containers with samples from the associated sampling event. EB samples will be analyzed for the same constituents as samples from the associated sampling event. EBs are used to evaluate the effectiveness of the sampling equipment decontamination process; EB samples are not required for disposable sampling equipment.

- **Field duplicates:** Independent samples collected as close as possible to the same time and location as the scheduled sample and intended to be identical. Field duplicates are placed in separate sample containers and analyzed independently. Field duplicates are used to determine precision for both sampling and laboratory measurements.

- **Field splits (SPLITs):** Two samples collected as close as possible to the same time and location and intended to be identical. SPLITs will be stored in separate containers and analyzed by different laboratories for the same analytes. SPLITs are interlaboratory comparison samples used to evaluate comparability between laboratories.

- **Field transfer blanks (FXRs):** Preserved volatile organic analysis sample vials filled with high-purity reagent water at the sample collection site where volatile organic compounds are collected. Samples will be prepared during sampling to evaluate potential contamination attributable to field conditions. After collection, FXR sample vials will be sealed and placed into the same storage containers with samples collected the same day for the associated sampling event. FXR samples will be analyzed for volatile organic compounds only.

- **Full trip blanks (FTBs):** Bottles prepared by the sampling team before going to the sampling site. The bottle set is either for volatile organic analysis only or identical to the set that will be collected in the field. Bottles are filled with high-purity reagent water and are then sealed and transported (unopened) to the field in the same storage containers used for samples collected that day. Collected FTBs are typically analyzed for the same constituents as the samples from the associated sampling event. FTBs are used to evaluate potential contamination of the samples attributable to the sample bottles, preservative, handling, storage, and transportation.

[1] Reagent water is high-purity water is generally defined as water that has been distilled, deionized, or any combination of distillation, deionization, reverse osmosis, activated carbon filtration, ion exchange, particulate filtration, or other polishing techniques (DOE/RL-96-68).

A3.3.2 Laboratory Quality Control Samples

Internal QA/QC programs are maintained by laboratories used by the project. Laboratory QA includes a comprehensive QC program that includes the use of laboratory control samples (LCSs), laboratory sample duplicates (DUPs), matrix spikes (MSs), matrix spike duplicates (MSDs), method blanks (MBs), and surrogates (SURs). These QC analyses follow EPA methods (e.g., SW-846) and will be run at the frequency specified in Table A-3. QC checks outside of control limits are documented in analytical laboratory reports and during data quality assessment (DQA) (if performed). Table A-3 lists the laboratory QC checks and their typical frequencies, and Table A-4 presents the acceptance criteria. Descriptions of the various types of laboratory QC samples are as follows:

- **Laboratory control sample (LCS):** A control matrix (e.g., reagent water) spiked with analytes representative of the target analytes or a certified reference material that is used to evaluate laboratory accuracy.
- **Laboratory sample duplicate (DUP):** An intralaboratory replicate sample that is used to evaluate the precision of a method in a given sample matrix.
- **Matrix spike (MS):** An aliquot of a sample spiked with a known concentration of target analytes. An MS is used to assess the bias of a method in a given sample matrix. Spiking occurs prior to sample preparation and analysis.
- **Matrix spike duplicate (MSD):** A replicate spiked aliquot of a sample that is subjected to the entire sample preparation and analytical process. MSD results are used to determine the bias and precision of a method in a given sample matrix.
- **Method blank (MB):** An analyte-free matrix to which the same reagents are added in the same volumes or proportions as used in the sample processing. The MB is carried through the complete sample preparations and analytical procedure and is used to quantify contamination resulting from the analytical process.
- **Surrogate (SUR):** Used only in organic analyses, a compound added to every sample in the analysis batch (field samples and QC samples) prior to preparation. SURs are typically similar in chemical composition to the analyte being determined, but they are not normally encountered. SURs are expected to respond to the preparation and measurement systems in a manner similar to the analytes of interest. Because SURs are added to every standard, sample, and QC sample, they are used to evaluate overall method performance in a given matrix.

Laboratories are required to analyze samples within the holding times specified in Table A-5. In some instances, constituents in the samples not analyzed within the holding times may be compromised by volatilization, decomposition, or other chemical changes. Data from samples analyzed outside of the holding times are flagged in the HEIS database with an “H.”

Table A-5. Preservation and Holding Time Guidelines for Laboratory Analyses

Constituent	Preservation[a]	Holding Time
Alkalinity	Store ≤6°C	14 days
Anions by ion chromatography	Store ≤6°C	48 hours[b]/28 days

Table A-5. Preservation and Holding Time Guidelines for Laboratory Analyses

Constituent	Preservation[a]	Holding Time
Cyanide (total)	Store ≤6°C, adjust pH to >12 with 50% sodium hydroxide. If oxidizing agents present, add 5 mL 0.1 N sodium arsenite/L or 0.06 g ascorbic acid/L	14 days
Sulfide	Store ≤6°C, adjust pH to >9 with zinc acetate and sodium hydroxide	7 days
Metals by inductively coupled plasma/ atomic emission spectrometry	Adjust pH to <2 with nitric acid	6 months
Mercury by cold-vapor atomic absorption	Adjust pH to <2 with nitric acid	28 days
Hexavalent chromium	Store ≤6°C	24 hours
Volatiles by GC/MS	Store ≤6°C, adjust pH to <2 with sulfuric acid or hydrochloric acid	14 days maximum preserved
Semivolatiles by GC or GC/MS (includes phenols)	Store ≤6°C	7 days before extraction 40 days after extraction
Polychlorinated biphenyls by GC	Store ≤6°C	1 year before extraction 40 days after extraction
Herbicides by GC	Store ≤6°C	7 days before extraction 40 days after extraction
Pesticides by GC	Store ≤6°C	7 days before extraction 40 days after extraction
Dioxins by high-resolution gas chromatography/high-resolution mass spectrometry	Store ≤6°C	30 days before extraction 45 days after extraction

Notes: Information in this table does not represent Washington State Department of Ecology requirements; it is intended solely as guidance.

See Appendices D and E for constituent list and analytical methods.

The container type for a sample is available on the chain-of-custody documentation.

This table applies only to laboratory analyses. Specific conductance, pH, dissolved oxygen, temperature, and turbidity are not listed because they are measured in the field.

a. For preservation identified as stored at ≤6°C, the sample should be protected against freezing unless it is known that freezing will not impact the sample integrity.

b. Holding time for nitrate, nitrite, and sulfate.

GC = gas chromatography

GC/MS = gas chromatography/mass spectrometry

A3.4 Measurement Equipment

Each measuring equipment user is responsible to ensure that equipment is functioning as expected, properly handled, and properly calibrated at required frequencies in accordance with methods governing control of the measuring equipment. Onsite environmental instrument testing, inspection, calibration, and maintenance will be recorded in accordance with approved methods. Field screening instruments will be used, maintained, and calibrated in accordance with manufacturer specifications and other approved methods.

A3.5 Instrument and Equipment Testing, Inspection, and Maintenance

Collection, measurement, and testing equipment should meet applicable standards (e.g., ASTM International [formerly the American Society for Testing and Materials]) or should have been evaluated as acceptable and valid in accordance with instrument-specific methods, requirements, and specifications. Software applications will be acceptance tested prior to use in the field.

Measurement and testing equipment used in the field or in the laboratory will be subject to preventive maintenance measures to minimize downtime. Laboratories must maintain and calibrate their equipment. Maintenance requirements (e.g., documentation of routine maintenance) will be included in the individual laboratory and onsite organization's QA plan or operating protocols. Maintenance of laboratory instruments will be performed, consistent with applicable Hanford Site requirements.

A3.6 Instrument/Equipment Calibration and Frequency

Field equipment calibration is discussed in Appendix B. Analytical laboratory instruments are calibrated in accordance with the laboratory's QA plan and applicable Hanford Site requirements.

A3.7 Inspection/Acceptance of Supplies and Consumables

Consumables, supplies, and reagents will be reviewed per test methods in SW-846 and the EPA/600 method series (e.g., EPA-600/4-79-020, *Methods for Chemical Analysis of Water and Wastes*) and will be appropriate for their use. Supplies and consumables used in sampling and analysis activities are procured under internal work requirements and processes. Responsibilities and interfaces necessary to ensure that items procured or acquired for the contractor meet the specific technical and quality requirements must be in place. The procurement system ensures that purchased items comply with applicable specifications. Supplies and consumables are checked and accepted by users prior to use.

A3.8 Nondirect Measurements

Data obtained from sources such as computer databases, programs, literature files, and historical records will be technically reviewed to the same extent as data generated as part of any sampling and analysis QA/QC effort. Data used in evaluations will be identified by source.

A3.9 Data Management

SMR, in coordination with the Project Delivery Manager, is responsible for ensuring that analytical data are reviewed, managed, and stored in accordance with applicable programmatic requirements governing data management methods. Records of data analyses and groundwater surface elevations are maintained as required by 40 CFR 265.94(a)(1), "Recordkeeping and Reporting."

Electronic data access will be through a Hanford Site database (e.g., HEIS). Where electronic data are not available, hardcopies will be provided in accordance with Section 9.6 of the Tri-Party Agreement Action Plan (Ecology et al., 1989b).

Laboratory errors are reported to SMR through an established process. For reported laboratory errors, a sample issue resolution form will be initiated to document analytical errors and establish their resolution with the Project Delivery Manager. The sample issue resolution forms become a permanent part of the analytical data package for future reference and records management.

A4 Data Review and Usability

This chapter addresses QA activities that occur after data collection. Implementation of these activities determines whether the data conform to the specified criteria, thus satisfying the project objectives.

A4.1 Data Review and Verification

Data review and verification are performed to confirm that sampling and chain-of-custody documentation are complete. This review includes linking sample numbers to specific sampling locations, as well as reviewing sample collection dates and sample preparation and analysis dates to determine if holding times were met. A QC data review that includes multilevel QC processes and resolution of problems is used to determine if analyses met the data quality requirements specified in this plan.

The criteria for verification include, but are not limited to, review for contractual compliance (samples were analyzed as requested), use of the correct analytical method, transcription errors, correct application of dilution factors, appropriate reporting of dry weight versus wet weight, and the correct application of conversion factors. Field QA/QC results also will be reviewed to ensure that they are usable.

The project scientist, assigned by the Project Delivery Manager, performs data reviews to determine if observed changes reflect improved/degraded groundwater quality or potential data errors, which may result in a request for data review on questionable data. The laboratory may be asked to check calculations, reanalyze samples, or the well may be resampled. Results of the request for data review process are used to flag data in the HEIS database and to add comments.

A4.2 Data Validation

Data validation is performed at the discretion of the Project Delivery Manager, under the direction of the SMR group. Data validation is based on the results of QC samples for individual well networks and discussions with the project scientist. If conducted, data validation (third-party) will be performed at a minimum frequency of 5% per method and be based on EPA functional guidelines (EPA-540-R-2017-001, *National Functional Guidelines for Inorganic Superfund Methods Data Review*; and EPA-540-R-2017-002, *National Functional Guidelines for Organic Superfund Methods Data Review*) and adjusted for use with SW-846 and HASQARD (DOE/RL-96-68).

A4.3 Reconciliation with User Requirements

The purpose of reconciliation with user requirements is to determine if quantitative data are of the correct type and are of adequate quality and quantity to meet the project data needs. The DQA process is the scientific and statistical evaluation of previously verified and validated data to determine if information obtained from environmental data operations are of the right type, quality, and quantity to support their intended use (usability). The DQA process uses the entirety of the collected data to determine usability for decision making. If a statistical sampling design was utilized during field sampling activities, then the

DQA will be performed following guidance in EPA/240/B-06/003, *Data Quality Assessment: Statistical Methods for Practitioners* (EPA QA/G-9S). When judgmental (focused) sampling designs are implemented in the field, DQIs such as precision, accuracy, representativeness, comparability, completeness, and sensitivity for the specific datasets (individual data packages) will be evaluated in accordance with EPA/240/R-02/004, *Guidance on Environmental Data Verification and Data Validation* (EPA QA/G8). Data verification and data validation are integral to both the statistical DQA data evaluation process and the DQI evaluation process. Results of the DQA or DQI processes generated by SMR will be used by the contractor Project Delivery Manager to interpret the data and determine if the data quality objectives for this activity have been met.

A5 References

40 CFR 265, "Interim Status Standards for Owners and Operators of Hazardous Waste Treatment, Storage, and Disposal Facilities," *Code of Federal Regulations*. Available at: http://www.ecfr.gov/cgi-bin/text-idx?SID=2cd7465519114fb3472b4864a0e3c42b&node=pt40.26.265&rgn=div5.

265.93, "Preparation, Evaluation, and Response."

265.94, "Recordkeeping and Reporting."

Subpart F, "Ground-Water Monitoring."

Atomic Energy Act of 1954, 42 USC 2011, Pub. L. 83-703, 68 Stat. 919, as amended. Available at: https://legcounsel.house.gov/Comps/Atomic%20Energy%20Act%20Of%201954.pdf.

DoD/DOE, 2018, *Department of Defense (DoD) Department of Energy (DOE) Consolidated Quality Systems Manual (QSM) for Environmental Laboratories*, Version 5.1, U.S. Department of Defense Environmental Data Quality Workgroup and U.S. Department of Energy Consolidated Audit Program, Washington, D.C. Available at: https://denix.osd.mil/edqw/documents/documents/qsm-version-5-1-1-final/.

DOE/RL-96-68, 2014, *Hanford Analytical Services Quality Assurance Requirements Document*, Rev. 4, *Volume 1, Administrative Requirements; Volume 2, Sampling Technical Requirements; Volume 3, Field Analytical Technical Requirements; and Volume 4, Laboratory Technical Requirements*, as amended, U.S. Department of Energy, Richland Operations Office, Richland, Washington. Available at:
http://www.hanford.gov/files.cfm/DOE-RL-96-68-VOL1-04.pdf.
http://www.hanford.gov/files.cfm/DOE-RL-96-68-VOL2-04.pdf.
http://www.hanford.gov/files.cfm/DOE-RL-96-68-VOL3-04.pdf.
http://www.hanford.gov/files.cfm/DOE-RL-96-68-VOL4-04.pdf.

DOE/RL-2017-65, *Hanford Site RCRA Groundwater Monitoring Report for 2017*, Rev. 0, U.S. Department of Energy, Richland Operations Office, Richland, Washington. Available at: https://pdw.hanford.gov/arpir/index.cfm/viewDoc?accession=0066266H.

ECF-HANFORD-18-0058, 2019, *Practical Quantitation Limits for Groundwater Environmental Samples*, Rev. 0, CH2M HILL Plateau Remediation Company, Richland, Washington. Available at: https://pdw.hanford.gov/arpir/index.cfm/viewDoc?accession=0063870H.

Ecology Publication No. 04-03-030, 2004, *Guidelines for Preparing Quality Assurance Project Plans for Environmental Studies*, revised December 2016, Washington State Department of Ecology, Olympia, Washington. Available at: https://fortress.wa.gov/ecy/publications/documents/0403030.pdf.

Ecology, EPA, and DOE, 1989a, *Hanford Federal Facility Agreement and Consent Order*, 2 vols., as amended, Washington State Department of Ecology, U.S. Environmental Protection Agency, and U.S. Department of Energy, Olympia, Washington. Available at: https://www.hanford.gov/page.cfm/TriParty/TheAgreement.

Ecology, EPA, and DOE, 1989b, *Hanford Federal Facility Agreement and Consent Order Action Plan*, as amended, Washington State Department of Ecology, U.S. Environmental Protection Agency, and U.S. Department of Energy, Olympia, Washington. Available at: https://www.hanford.gov/page.cfm/TriParty/TheAgreement/ActionPlan.

EPA/240/B-01/003, 2001, *EPA Requirements for Quality Assurance Project Plans*, EPA QA/R-5, Office of Environmental Information, U.S. Environmental Protection Agency, Washington, D.C. Available at: https://www.epa.gov/sites/production/files/2016-06/documents/r5-final_0.pdf.

EPA/240/B-06/003, 2006, *Data Quality Assessment: Statistical Methods for Practitioners*, EPA QA/G-9S, Office of Environmental Information, U.S. Environmental Protection Agency, Washington, D.C. Available at: https://www.epa.gov/sites/production/files/2015-08/documents/g9s-final.pdf.

EPA/240/R-02/004, 2002, *Guidance on Environmental Data Verification and Data Validation*, EPA QA/G-8, Office of Environmental Information, U.S. Environmental Protection Agency, Washington, D.C. Available at: https://www.epa.gov/sites/production/files/2015-06/documents/g8-final.pdf.

EPA/240/R-02/009, 2002, *Guidance for Quality Assurance Project Plans*, EPA QA/G-5, Office of Environmental Information, U.S. Environmental Protection Agency, Washington, D.C. Available at: https://www.epa.gov/sites/production/files/2015-06/documents/g5-final.pdf.

EPA-540-R-2017-001, 2017, *National Functional Guidelines for Inorganic Superfund Methods Data Review*, Office of Superfund Remediation and Technology Innovation, U.S. Environmental Protection Agency, Washington, D.C. Available at: https://www.epa.gov/sites/production/files/2017-01/documents/national_functional_guidelines_for_inorganic_superfund_methods_data_review_01302017.pdf

EPA-540-R-2017-002, 2017, *National Functional Guidelines for Organic Superfund Methods Data Review*, Office of Superfund Remediation and Technology Innovation, U.S. Environmental Protection Agency, Washington, D.C. Available at: https://www.epa.gov/sites/production/files/2017-01/documents/national_functional_guidelines_for_organic_superfund_methods_data_review_013072017.pdf.

EPA-600/4-79-020, 1983, *Methods for Chemical Analysis of Water and Wastes*, Environmental Monitoring and Support Laboratory, Office of Research and Development, U.S. Environmental Protection Agency, Cincinnati, Ohio. Available at: http://pdw.hanford.gov/arpir/index.cfm/viewDoc?accession=D196019611.

Resource Conservation and Recovery Act of 1976, 42 USC 6901, et seq. Pub. L. 94-580, 90 Stat. 2795. Available at: https://elr.info/sites/default/files/docs/statutes/full/rcra.pdf.

SGW-60576, 2018, *Engineering Evaluation Report for Single Shell Tank Waste Management Area TX-TY Groundwater Monitoring*, Rev. 0, U.S. Department of Energy, Richland Operations Office, Richland, Washington. Available at: https://pdw.hanford.gov/arpir/index.cfm/viewDoc?accession=0064670H.

SW-846, 2015, *Test Methods for Evaluating Solid Waste: Physical/Chemical Methods, Third Edition; Final Update V*, as amended, Office of Solid Waste and Emergency Response, U.S. Environmental Protection Agency, Washington, D.C. Available at: https://www.epa.gov/hw-sw846.

WAC 173-160, "Minimum Standards for Construction and Maintenance of Wells," *Washington Administrative Code*, Olympia, Washington. Available at: http://apps.leg.wa.gov/WAC/default.aspx?cite=173-160.

WAC 173-303-400, "Dangerous Waste Regulations," "Interim Status Facility Standards," *Washington Administrative Code*, Olympia, Washington. Available at: http://apps.leg.wa.gov/WAC/default.aspx?cite=173-303-400.

Appendix B

Sampling Protocol

This page intentionally left blank.

Contents

B1 Introduction B-1

B2 Sampling Methods B-1

B2.1 Decontamination of Sampling Equipment B-3

B2.2 Water Levels B-4

B3 Documentation of Field Activities B-4

B3.1 Corrective Actions and Deviations for Sampling Activities B-5

B4 Calibration of Field Equipment B-5

B5 Sample Handling B-5

B5.1 Containers B-6

B5.2 Container Labeling B-6

B5.3 Sample Custody B-6

B5.4 Sample Transportation B-7

B6 Management of Waste B-7

B7 Health and Safety B-8

B8 References B-8

This page intentionally left blank.

Terms

DOE	U.S. Department of Energy
DOT	U.S. Department of Transportation
DWMU	dangerous waste management unit
HASQARD	*Hanford Analytical Services Quality Assurance Requirements Document*
IATA	International Air Transport Association
NTU	nephelometric turbidity unit
QA	quality assurance
QC	quality control
RCRA	*Resource Conservation and Recovery Act of 1976*
SMR	Sample Management and Reporting

This page intentionally left blank.

B1 Introduction

Groundwater monitoring at the Hanford Site, as defined by the *Resource Conservation and Recovery Act of 1976* (RCRA) and implemented in WAC 173-303, "Dangerous Waste Regulations," has been conducted since the mid-1980s. Hanford Site groundwater sampling methods contain extensive requirements for sampling precautions to be taken; equipment and its use; cleaning and decontamination; records and documentation; and sample collection, management, and control activities. This appendix and Appendix A provide the sampling and analysis essentials necessary for the groundwater monitoring plan: sample collection, sample preservation and holding times, chain-of-custody control, analytical procedures, and field and laboratory quality assurance (QA)/quality control (QC).

This appendix provides more specific elements of the sampling protocols and techniques used for the groundwater monitoring plan. Chapter 2 in the main text of this monitoring plan identifies the monitoring wells that will be sampled, constituents to be analyzed, and sampling frequency for groundwater monitoring at the dangerous waste management unit (DWMU).

B2 Sampling Methods

Sampling may include, but is not limited to, the following methods:

- Field screening measurements
- Groundwater sampling
- Water-level measurements

Groundwater samples will be collected in accordance with the current revision of applicable operating methods. Groundwater samples are collected after field measurements of purged groundwater have stabilized:

- **pH:** Two consecutive measurements agree within 0.2 pH units.
- **Temperature:** Two consecutive measurements agree within 0.2°C (0.36°F).
- **Conductivity:** Two consecutive measurements agree within 10% of each other.
- **Turbidity:** Less than 5 nephelometric turbidity units (NTUs) prior to sampling (or project scientist recommendation).

Dissolved oxygen will also be measured in the field in this groundwater monitoring plan. Dissolved oxygen and oxygen reduction potential are not indicator parameters, wastes constituents, reaction products nor dangerous constituents, and are not required to be stable prior to sample collection.

Unless special requirements are requested from project scientists, wells are typically purged using the equivalent volume as that of three borehole diameters multiplied by the length of the saturated portion of the well screen. Stable field readings are also required (as specified above). The default pumping rate is 7.6 to 45.4 L/min (2 to 12 gal/min), depending on the pump, although pumping at this rate is not practical at every well. If the purge volume is unusually large, wells are purged for a minimum of 1 hour and are then sampled when stable field readings are obtained.

Field measurements (except for turbidity) are obtained using a flow-through cell. Groundwater is pumped directly from the well to the flow-through cell. At the beginning of the sample event, field crews attach a clean stainless-steel sampling manifold to the riser discharge. The manifold has two valves and two

ports: one port is used only for purgewater, and the other port is used to supply water to the flow-through cell. Probes are inserted into the flow-through cell to measure pH, temperature, conductivity, and dissolved oxygen. Turbidity is measured by inserting a sample vial into a turbidimeter. Purgewater is then discharged to a tank on the purgewater truck.

After field measurements have stabilized, the hose supplying water to the flow-through cell is disconnected and a clean stainless-steel drop leg is attached for sampling. The flow rate is reduced during sampling to minimize loss of volatiles (if any) and prevent overfilling the sample bottles. Sample bottles are filled in a sequence designed to minimize loss of volatiles (if any). Filtered samples are collected after collection of the unfiltered samples. For some constituents (e.g., metals), both filtered and unfiltered samples are collected. If additional samples require filtration (e.g., at turbidity greater than 5 NTUs), an inline, disposable 0.45 µm filter is used.

Typically, three traditional types of environmental-grade sampling pumps are used for groundwater sampling at Hanford Site monitoring wells: Grundfos®, Pacific Hydrostar®, and submersible electrical pumps. Low purge volume, adjustable-rate bladder pumps may also be used. Individual pumps are selected based on the unique characteristics of the well and the sampling requirements.

A small number of wells will not support pumping of samples because of low yield or the physical characteristics of the well. In these cases, a grab sample may be obtained. In cases where there is insufficient yield, purgewater activities are not performed.

Low purge volume sampling methodology for collecting groundwater samples is also used at the Hanford Site. Low-flow purging and sampling uses a low purge volume, adjustable-rate bladder pump with typical flow rates of 0.1 to 0.5 L/min (0.26 to 0.13 gal/min). This methodology is intended to minimize excessive movement of water from the soil formation into the well. The objective is to pump in a manner that minimizes stress (drawdown) to the system. Purge volumes for wells using low-purge bladder pumps are determined on a well-specific basis based on drawdown, pumping rate, pump and sample line volume, and volume required to obtain stable field conditions prior to collecting samples.

For certain types of samples, preservatives are required. Preservatives (based on the analytical methods used) are added to the collection bottles before their use in the field. Samples may require filtering in the field, as noted on the chain-of-custody form.

To ensure sample and data usability, sampling associated with this groundwater monitoring plan will be performed in accordance with the requirements of DOE/RL-96-68, *Hanford Analytical Services Quality Assurance Requirements Document* (HASQARD), pertaining to sample collection, collection equipment, and sample handling (including chain of custody).

Sample preservation and holding-time requirements are specified for groundwater samples in Table A-4 in Appendix A of this monitoring plan. These requirements are in accordance with the analytical methods specified in Appendices D and E. Container types, preservatives, and volumes will be identified on the chain-of-custody form. This groundwater monitoring plan defines a sample as a filled sample bottle for purposes of starting the clock for holding time restrictions.

Holding time is the maximum allowable period between sample collection and analysis. Exceeding required holding times could result in changes in constituent concentrations due to volatilization, decomposition, or other chemical alterations. Required holding times depend on the constituent and are

---

®Grundfos is a registered trademark of Grundfos Pumps Corporation, Downers Grove, Illinois.

®Pacific Hydrostar is a registered trademark of Harbor Freight Tools USA, Inc., Calabasas, California.

listed in analytical method compilations such as APHA/AWWA/WEF, 2012, *Standard Methods for the Examination of Water and Wastewater*; SW-846, *Test Methods for Evaluating Solid Waste, Physical/Chemical Methods, Third Edition; Final Update V*, as amended; and the EPA/600 method series (e.g., EPA/600/4-79/020, *Methods for Chemical Analysis of Water and Wastes*). Recommended holding times are also provided in HASQARD (DOE/RL-96-68).

B2.1 Decontamination of Sampling Equipment

Sampling equipment will be decontaminated in accordance with sampling equipment decontamination methods. To prevent potential contamination of the samples, care should be taken to use decontaminated equipment for each specific sampling activity.

Special care should be taken to avoid the following common ways in which cross-contamination or background contamination may compromise the samples:

- Improperly storing or transporting sampling equipment and sample containers
- Contaminating the equipment or sample bottles by setting the equipment/sample bottle on or near potential contamination sources (e.g., uncovered ground)
- Handling bottles or equipment with dirty hands or gloves
- Improperly decontaminating equipment before sampling or between sampling events

Decontamination of sampling equipment and pumps is performed using high-purity water[1] in each step. In general, three rinse cycles are performed to decontaminate sampling equipment: detergent rinse, acid rinse, and water rinse. During the detergent rinse, equipment is washed in a phosphate-free detergent solution, followed by rinsing with water in three sequential containers. After the third water rinse, equipment that is stainless steel or glass is rinsed in a 1M nitric acid solution (pH less than 2). Equipment is then rinsed with water in three sequential containers (the water rinses following the acid rinse are conducted in separate water containers that are not used for detergent rinse). Following the final water rinse, equipment is rinsed in hexane and then placed on a rack to dry. Dry equipment is loaded into a drying oven. The oven is set at 50°C (122°F) for items that are not metal or glass or at 100°C (212°F) for metal or glass. Once reaching temperature, equipment is baked for 20 minutes and then cooled. Equipment is then removed from the oven and enclosed in clean, unused aluminum foil using surgeon gloves. The wrapped equipment is stored in a custody-locked, controlled access area.

To decontaminate sampling pumps that are not permanently installed, the pump cowling is first removed, washed (if needed) in phosphate-free detergent solution, and then reinstalled on the pump. The pump is then submerged in phosphate-free detergent solution, and 11.4 L (3 gal) of solution is pumped through the unit and disposed. Detergent solution is then circulated through the submerged pump for 5 minutes. The pump is removed from solution and rinsed with water. The pump is submerged in water, and 30.3 L (8 gal) of water is pumped through the unit and disposed. The pump is removed from the water, and the intake and housing are covered with plastic sleeving. Cleaning is documented on a tag that is affixed to the pump with the following information:

- Date of pump cleaning

[1] High-purity water that is generally defined as water that has been distilled, deionized, or any combination of distillation, deionization, reverse osmosis, activated carbon filtration, ion exchange, particulate filtration, or other polishing techniques (Vol 1, Appendix A in DOE/RL-96-68).

- Pump identification
- Comments
- Signature of individual performing decontamination

B2.2 Water Levels

Each time a sample is obtained, measurement of the groundwater surface elevation at each monitoring well is required by 40 CFR 265.92(e), "Interim Status Standards for Owners and Operators of Hazardous Waste Treatment, Storage, and Disposal Facilities," "Sampling and Analysis." Using a calibrated depth measurement tape, the depth to water is recorded in each well prior to sampling. When two consecutive measurements are taken that agree within 6 mm (0.24 in.), the final determined measurement is recorded, along with the date and time for the specific event. The depth to groundwater is subtracted from the elevation of a reference point (usually the top of the casing) to obtain the water-level elevation. The top of the casing is a known elevation reference point because it has been surveyed to local reference data.

B3 Documentation of Field Activities

Logbooks or data forms are required for field activities and will be used in accordance with HASQARD (DOE/RL-96-68) requirements. A logbook must be identified with a unique project name and number. The individuals responsible for logbooks will be identified in the front of the logbook, and only authorized persons may make entries in logbooks. Logbook entries will be reviewed by the sampling field work supervisor, cognizant scientist/engineer, or other responsible manager; the review will be documented with a signature and date. Logbooks will be permanently bound, waterproof, and ruled with sequentially numbered pages. Pages will not be removed from logbooks for any reason. Entries will be made in indelible ink. Corrections will be made by marking through the erroneous data with a single line, entering the correct data, and initialing and dating the changes.

Data forms may be used to collect field information; however, information recorded on data forms must follow the same requirements as those for logbooks. The data forms must be referenced in the logbooks.

The following information is recorded in logbooks or on data forms:

- Day and date; time task started; weather conditions; and names, titles, and organizations of personnel performing the task.
- Purpose of visit to the task area.
- Site activities in specific detail (e.g., maps and drawings) or the forms used to record such information (e.g., soil boring log or well completion log), details of any field tests that were conducted, references to any forms that were used, other data records, and methods followed in conducting the activity.
- Details of any field calibrations and surveys that were conducted, references to any forms that were used, other data records, and methods followed in conducting the calibrations and surveys.
- Details of any samples collected and the preparation (if any) of splits, duplicates, matrix spikes, or blanks. Reference the methods followed in sample collection or preparation; list location of sample collected, sample type, each label or tag numbers, sample identification, sample containers and volume, preservation method, packaging, chain-of-custody form number, and analytical request form number pertinent to each sample or sample set; and note the time and the name of the individual to whom custody of samples was transferred.

- Time, equipment type, serial or identification number, and methods followed for decontaminations and equipment maintenance performed (reference the page numbers of any logbook where detailed information is recorded).
- Any equipment failures or breakdowns that occurred, with a brief description of repairs or replacement.

B3.1 Corrective Actions and Deviations for Sampling Activities

The Project Delivery Manager for Groundwater Science, Field Work Supervisor, appropriate field crew supervisors, and Sample Management and Reporting (SMR) personnel must document deviations from protocols, issues pertaining to sample collection, chain-of-custody forms, target analytes, contaminants, sample transport, and noncompliant monitoring. Examples of deviations include samples not collected due to field conditions.

As appropriate, such deviations or issues will be documented (e.g., in the field logbook) in accordance with internal corrective action methods. The project delivery manager, field work supervisor, field crew supervisors, or SMR personnel will be responsible for communicating field corrective action requirements and ensuring that immediate corrective actions are applied to field activities.

Changes in sample activities that require notification, approval, and documentation will be performed as specified in Appendix A, Table A-2.

B4 Calibration of Field Equipment

Onsite environmental instruments are calibrated in accordance with the manufacturer's operating instructions, internal work requirements and processes, and/or field instructions that provide direction for equipment calibration or verification of accuracy by analytical methods. Calibration records will include the raw calibration data, identification of the standards used, associated reports, date of analysis, and analyst's name or initials. Results from all instrument calibration activities are recorded in accordance with HASQARD (DOE/RL-96-68) requirements.

Field instrumentation calibration and QA checks will be performed as follows:

- Prior to initial use of a field analytical measurement system
- At the frequency recommended by the manufacturer or methods, or as required by regulations
- Upon failure to meet specified QC criteria
- Daily calibration checks will be performed and documented for each instrument used (these checks will be made on standard materials sufficiently like the matrix under consideration for direct comparison of data; analysis times will be sufficient to establish detection efficiency and resolution)
- Using standards for calibration that are traceable to a nationally recognized standard agency source or measurement system (manufacturer's recommendations for storage and handling of standards, if any, will be followed)

B5 Sample Handling

Sample handling and transfer will be in accordance with established methods to preclude loss of identity, damage, deterioration, and loss of sample. A sampling and analytical database is used to track samples from the point of collection through the laboratory analysis process.

B5.1 Containers

Samples will be collected, where and when appropriate, in break-resistant containers. The field sample collection record will indicate the laboratory lot number of the bottles used in sample collection. When commercially pre-cleaned containers are used in the field, the name of the manufacturer, lot identification, and certification will be documented.

Containers will be capped and stored in an environment that minimizes the possibility of sample container contamination. If contamination of the stored sample containers occurs, corrective actions will be implemented to prevent reoccurrences. Contaminated sample containers cannot be used for a sampling event. Container sizes may vary depending on laboratory-specific volumes/requirements for meeting analytical detection limits. Container types and sample amounts/volumes are identified on the chain-of-custody form.

B5.2 Container Labeling

Each sample is identified by affixing a standardized label or tag to the container. The label or tag will contain the sample identification number. The label will identify or provide reference to associate the sample with the date and time of collection, preservative used (if applicable), analysis required, and collector's name or initials. Sample labels may be either pre-printed or handwritten in indelible or waterproof ink.

B5.3 Sample Custody

Sample custody will be maintained in accordance with existing protocols to ensure that sample integrity is maintained throughout the analytical process. Chain-of-custody protocols will be followed throughout sample collection, transfer, analysis, and disposal to ensure that sample integrity is maintained. A chain-of-custody record will be initiated in the field at the time of sampling and will accompany each set of samples shipped to any laboratory.

Shipping requirements will determine how sample shipping containers are prepared for shipment. The analyses requested for each sample will be indicated on the accompanying chain-of-custody form. Each time the responsibility for sample custody changes, new and previous custodians will sign the record and note the date and time. The field sampling team will make a copy of the signed record before sample shipment and transmit the copy to the SMR group.

The following minimum information is required on a completed chain-of-custody form:

- Project name
- Collectors' names
- Unique sample number
- Date, time, and location (or traceable reference thereto) of sample collection
- Matrix
- Preservatives
- Chain-of-possession information (i.e., signatures and printed names of each individual involved in the transfer of sample custody and storage locations, and dates/times of receipt and relinquishment)

- Requested analyses (or reference thereto)
- Shipped to information (i.e., analytical laboratory performing the analysis)

Samplers should note any anomalies with the samples. If anomalies are found, samplers should inform the SMR group so special direction for analysis can be provided to the laboratory if deemed necessary.

Custody seals or custody tape will be used to verify that sample integrity has been maintained during sample transport. The custody seal will be inscribed with the sampler's initials and date. If during the chain-of-custody process it is discovered that the custody tape has been tampered with or broken on both the sample bottle and the cooler, the sample will be analyzed but the results will include a flag to indicate that custody was broken. If the sample data did not trend with the other data or were not as expected, the data from the sample would be flagged accordingly.

B5.4 Sample Transportation

Packaging and transportation instructions will comply with applicable transportation regulations and U.S. Department of Energy (DOE) requirements. Regulations for classifying, describing, packaging, marking, labeling, and transporting hazardous materials, hazardous substances, and hazardous wastes are enforced by the U.S. Department of Transportation (DOT), as described in 49 CFR 171, "Transportation," "General Information, Regulations, and Definitions," through 49 CFR 177, "Carriage by Public Highway."[2] Carrier-specific requirements, defined in the current edition of International Air Transport Association (IATA) *Dangerous Goods Regulations*, will also be used when preparing sample shipments conveyed by air freight providers.

Samples containing hazardous constituents will be considered hazardous material in transportation and transported according to DOT/IATA requirements. If the sample material is known or can be identified, then it will be classified, described, packaged, marked, labeled, and shipped according to the specific instructions for that material. Appropriate laboratory notifications will be made, if necessary, through the SMR project coordinator.

B6 Management of Waste

As a RCRA-regulated waste site, groundwater monitoring at the DWMU must satisfy *Washington Administrative Code* and *Code of Federal Regulations* requirements (WAC 173-303-400, "Interim Status Facility Standards," and 40 CFR 265, Subpart F, "Ground-Water Monitoring") for groundwater quality assessment program monitoring. However, the groundwater underlying the DWMU is currently managed as a *Comprehensive Environmental Response, Compensation, and Liability Act of 1980* past-practice unit. All waste materials contacted by and associated with groundwater that are encountered during sampling activities will be managed as investigation-derived waste per DOE/RL-2011-41, *Hanford Site Strategy for Management of Investigation Derived Waste*.

Waste material is generated during sample collection, processing, and subsampling activities. Waste will be managed in accordance with DOE/RL-2000-40, *Waste Management Plan for the Expedited Response Action for 200 West Area Carbon Tetrachloride Plume and the 200-ZP-1 and 200-PW-1 Operable Units*. For waste designation purposes, data from the Hanford Environmental Information System for wells listed in Table 2-1 in the main text of this monitoring plan may be evaluated, and the

[2] Transportation regulations 49 CFR 174, "Carriage by Rail," and 49 CFR 176, "Carriage by Vessel," are not applicable, as these two transportation methods are not used.

maximum concentration for each analyte within the most recent 5 years will be evaluated for use in creating a waste profile, if required.

Miscellaneous solid waste that has contacted suspect dangerous waste will be managed as dangerous waste. Purgewater and decontamination fluids will be collected and managed in accordance with DOE/RL-2009-80, *Investigation Derived Waste Purgewater Management Work Plan*, and DOE/RL-2011-41. Waste material requiring collection will be placed in containers appropriate for the material and the receiving facility in accordance with the applicable waste management or waste control plan and applicable substantive federal and/or state requirements.

Packaging and labeling during waste storage and transportation will meet WAC 173-303 and DOT requirements, as appropriate. Packaging exceptions to DOT requirements may be used for onsite waste shipments if documented as such and if the packaging provides an equivalent degree of safety during transportation.

Offsite analytical laboratories are responsible for disposing unused sample quantities and wastes generated during analytical activities.

B7 Health and Safety

DOE established the hazardous waste operations safety and health program pursuant to the *Price-Anderson Amendments Act of 1988* to ensure the safety and health of workers involved in mixed waste site activities. The program was developed to comply with the requirements of 10 CFR 851, "Worker Safety and Health Program," which incorporates the standards of 29 CFR 1910.120, "Occupational Safety and Health Standards," "Hazardous Waste Operations and Emergency Response"; 10 CFR 830, "Nuclear Safety Management"; and 10 CFR 835, "Occupational Radiation Protection." The health and safety program defines the chemical, radiological, and physical hazards and specifies the controls and requirements for daily work activities on the overall Hanford Site. Personnel training; control of industrial safety and radiological hazards; personal protective equipment; site control; and general emergency response to spills, fire, accidents, injury, site visitors, and incident reporting are governed by the health and safety program.

B8 References

10 CFR 830, "Nuclear Safety Management," *Code of Federal Regulations*. Available at: http://www.ecfr.gov/cgi-bin/text-idx?SID=47e3de0454360a17406cb89ade0c966d&mc=true&node=pt10.4.830&rgn=div5.

10 CFR 835, "Occupational Radiation Protection," *Code of Federal Regulations*. Available at: http://www.ecfr.gov/cgi-bin/text-idx?SID=57ef404ac6f4734a67fd97302b2d7f7f&node=pt10.4.835&rgn=div5.

10 CFR 851, "Worker Safety and Health Program," *Code of Federal Regulations*. Available at: http://www.ecfr.gov/cgi-bin/text-idx?SID=47e3de0454360a17406cb89ade0c966d&mc=true&node=pt10.4.851&rgn=div5.

29 CFR 1910.120, "Occupational Safety and Health Standards," "Hazardous Waste Operations and Emergency Response," *Code of Federal Regulations*. Available at: https://www.osha.gov/pls/oshaweb/owadisp.show_document?p_table=standards&p_id=9765.

40 CFR 265, "Interim Status Standards for Owners and Operators of Hazardous Waste Treatment, Storage, and Disposal Facilities," *Code of Federal Regulations*. Available at: http://www.ecfr.gov/cgi-bin/text-idx?SID=2cd7465519114fb3472b4864a0e3c42b&node=pt40.26.265&rgn=div5.

265.92, "Sampling and Analysis."

Subpart F, "Ground-Water Monitoring."

49 CFR, "Transportation, *Code of Federal Regulations*. Available at: http://www.ecfr.gov/cgi-bin/text-idx?SID=670b98fcf27b2244917cfdf3293b16e4&tpl=/ecfrbrowse/Title49/49cfrv2_02.tpl#0.

171, "General Information, Regulations, and Definitions."

172, "Hazardous Materials Table, Special Provisions, Hazardous Materials Communications, Emergency Response Information, Training Requirements, and Security Plans."

173, "Shippers—General Requirements for Shipments and Packagings."

175, "Carriage by Aircraft."

177, "Carriage by Public Highway."

APHA/AWWA/WEF, 2012, *Standard Methods for the Examination of Water and Wastewater*, 22nd Edition, American Public Health Association, American Water Works Association, and Water Environment Federation, Washington, D.C.

Comprehensive Environmental Response, Compensation, and Liability Act of 1980, 42 USC 9601, et seq., Pub. L. 107-377, December 31, 2002. Available at: https://www.csu.edu/cerc/researchreports/documents/CERCLASummary1980.pdf.

DOE/RL-96-68, 2014, *Hanford Analytical Services Quality Assurance Requirements Document*, Rev. 4, *Volume 1, Administrative Requirements*; *Volume 2, Sampling Technical Requirements*; *Volume 3, Field Analytical Technical Requirements*; and *Volume 4, Laboratory Technical Requirements*, as amended, U.S. Department of Energy, Richland Operations Office, Richland, Washington. Available at: http://www.hanford.gov/files.cfm/DOE-RL-96-68-VOL1-04.pdf. http://www.hanford.gov/files.cfm/DOE-RL-96-68-VOL2-04.pdf. http://www.hanford.gov/files.cfm/DOE-RL-96-68-VOL3-04.pdf. http://www.hanford.gov/files.cfm/DOE-RL-96-68-VOL4-04.pdf.

DOE/RL-2000-40, 2008, *Waste Management Plan for the Expedited Response Action for 200 West Area Carbon Tetrachloride Plume and the 200-ZP-1 and 200-PW-1 Operable Units*, Rev. 8, as amended, U.S. Department of Energy, Richland Operations Office, Richland, Washington. Available at: http://pdw.hanford.gov/arpir/index.cfm/viewDoc?accession=0901300167.

DOE/RL-2009-80, 2013, *Investigation Derived Waste Purgewater Management Work Plan*, Rev. 0, as amended, U.S. Department of Energy, Richland Operations Office, Richland, Washington. Available at: https://pdw.hanford.gov/arpir/index.cfm/viewDoc?accession=0094946.

DOE/RL-2011-41, 2011, *Hanford Site Strategy for Management of Investigation Derived Waste*, Rev. 0, as amended, U.S. Department of Energy, Richland Operations Office, Richland, Washington. Available at: http://pdw.hanford.gov/arpir/index.cfm/viewDoc?accession=0093937.

EPA-600/4-79-020, 1983, *Methods for Chemical Analysis of Water and Wastes*, Environmental Monitoring and Support Laboratory, Office of Research and Development, U.S. Environmental Protection Agency, Cincinnati, Ohio. Available at: http://pdw.hanford.gov/arpir/index.cfm/viewDoc?accession=D196019611.

IATA, *Dangerous Goods Regulations*, Current Edition, International Air Transport Association, Montreal, Quebec, Canada. Available at: http://www.iata.org/publications/dgr/Pages/index.aspx.

Price-Anderson Amendments Act of 1988, Pub. L. 100-408, Aug. 20, 1988, 102 Stat. 1066, 42 USC 2010, et seq. Available at: http://www.gpo.gov/fdsys/pkg/STATUTE-102/pdf/STATUTE-102-Pg1066.pdf.

Resource Conservation and Recovery Act of 1976, 42 USC 6901, et seq. Pub. L. 94-580, 90 Stat. 2795. Available at: https://elr.info/sites/default/files/docs/statutes/full/rcra.pdf.

SW-846, 2015, *Test Methods for Evaluating Solid Waste: Physical/Chemical Methods, Third Edition; Final Update V*, as amended, Office of Solid Waste and Emergency Response, U.S. Environmental Protection Agency, Washington, D.C. Available at: https://www.epa.gov/hw-sw846.

WAC 173-303, "Dangerous Waste Regulations," *Washington Administrative Code*, Olympia, Washington. Available at: http://apps.leg.wa.gov/WAC/default.aspx?cite=173-303.

303-400, "Interim Status Facility Standards."

Appendix C

Well Construction

This page intentionally left blank.

Contents

C1 Introduction **C-1**

C2 References **C-19**

Figures

Figure C-1. Well 299-W10-26 Construction and Completion Summary C-4
Figure C-2. Well 299-W10-27 Construction and Completion Summary C-6
Figure C-3. Well 299-W14-13 Construction and Completion Summary C-7
Figure C-4. Well 299-W14-14 Construction and Completion Summary C-9
Figure C-5. Well 299-W14-15 Construction and Completion Summary C-11
Figure C-6. Well 299-W14-18 Construction and Completion Summary C-13
Figure C-7. Well 299-W14-19 Construction and Completion Summary C-15
Figure C-8. Well 299-W15-44 Construction and Completion Summary C-16
Figure C-9. Well 299-W15-765 Construction and Completion Summary C-17

Tables

Table C-1. Hydrogeologic Monitoring Unit Classification Scheme C-1
Table C-2. Sampling Interval Information for Wells Within the WMA TX-TY Network C-1
Table C-3. Planned Location, Depth, and Screen Interval for Proposed Wells Within the WMA TX-TY Network C-3

This page intentionally left blank.

C1 Introduction

This appendix provides the following information for the existing Waste Management Area (WMA) TX-TY groundwater monitoring wells:

- Well name
- Hydrogeologic unit monitored (the aquifer portion at the well screen perforation) (Table C-1)
- The following sampling interval information, as provided in Table C-2:
  - Elevation at the top of the screen or perforated interval
  - Elevation at the bottom of the screen or perforated interval
  - Open interval length (i.e., difference between the top and bottom screen perforation elevations)
  - Drilling method

For proposed wells, the following design information is provided in Table C-3:

- Well location
- Drill depth
- Well diameter
- Screen interval depth
- Sump and end cap interval

Figures C-1 through C-9 provide construction and completion summaries for the existing network wells.

Table C-1. Hydrogeologic Monitoring Unit Classification Scheme

Unit	Description
TU	**Top of Unconfined.** Screened across the water table or the top of the open interval is within 1.5 m (5 ft) of the water table, and the bottom of the open interval is no more than 10.7 m (35 ft) below the water table.

Table C-2. Sampling Interval Information for Wells Within the WMA TX-TY Network

Well Name	Hydrogeologic Unit Monitored	Elevation Top of Open Interval (m [ft] NAVD88)	Elevation Bottom of Open Interval (m [ft] NAVD88)	Open Interval Length (m [ft])	Drilling Method
299-W10-26	TU	138.53 (454.50)	127.86 (419.50)	10.67 (35.01)	Air rotary
299-W10-27	TU	137.54 (451.24)	126.87 (416.24)	10.67 (35.01)	Cable tool
299-W14-13	TU	138.20 (453.43)	127.54 (418.43)	10.66 (34.97)	Air rotary
299-W14-14	TU	138.48 (454.33)	127.81 (419.33)	10.67 (35.01)	Air rotary
299-W14-15	TU	137.53 (451.21)	126.86 (416.21)	10.67 (35.01)	Air rotary/ cable tool
299-W14-18	TU	137.82 (452.15)	127.15 (417.15)	10.67 (35.01)	Cable tool
299-W14-19	TU	136.62 (448.24)	125.96 (413.24)	10.66 (34.97)	Becker hammer
299-W15-44	TU	138.26 (453.59)	127.59 (418.59)	10.67 (35.01)	Becker hammer

Table C-2. Sampling Interval Information for Wells Within the WMA TX-TY Network

Well Name	Hydrogeologic Unit Monitored	Elevation Top of Open Interval (m [ft] NAVD88)	Elevation Bottom of Open Interval (m [ft] NAVD88)	Open Interval Length (m [ft])	Drilling Method
299-W15-765	TU	137.45 (450.95)	126.78 (415.95)	10.67 (35.01)	Air rotary

Reference: NAVD88, *North American Vertical Datum of 1988*.

TU = Top of Unconfined, as described in Table C-1

Table C-3. Planned Location, Depth, and Screen Interval for Proposed Wells Within the WMA TX-TY Network

Proposed Well (Well ID)	Northing* (m)	Easting* (m)	Surface Elevation (m [ft] NAVD88)	Water Table Elevation (m [ft] NAVD88)	Depth to Water (m [ft] bgs)	Drill Depth (m [ft] bgs)	Final Well Diameter (cm [in.])	Screen Interval (m [ft] bgs)	Sump and End Cap Interval (m [ft] bgs)
WMA-TX-TY_PW1 (D0020)	136474.8	566578.6	TBD	TBD	TBD	TBD	TBD	TBD	TBD
WMA-TX-TY_PW2 (D0021)	136210.0	566490.1	TBD	TBD	TBD	TBD	TBD	TBD	TBD

Reference: NAVD88, *North American Vertical Datum of 1988*.

Note: Well coordinates are estimates and subject to modification based on final well location survey.

*Coordinates are in Washington State Plane (south zone), NAD83, *North American Datum of 1983*; 1991 adjustment.

bgs = below ground surface

TBD = to be determined. Information will be obtained after well construction.

0502371

WELL CONSTRUCTION AND COMPLETION SUMMARY

Drilling Method:	Air Rotary - TUBEX	Sample Method:	Grab/Split Spoon	WELL NUMBER:	299-W10-26 B8548
Drilling Fluid Used:	Reverse Air	Additives Used:	None	TEMPORARY WELL NO:	Not Allowed
Driller's Name:	Willie Franklin	WA State Lic Nr:	Not Available	Coordinates: N	Not documented
Drilling Company:	Layne Christensen	Company Location:	Salt Lake City, Ut	Coordinates: E	Not documented
Date Started:	20Aug98	Date Completed:	25Aug98	Start Card #:	Not Available
				Elevation Ground Surface:	Brass Marker

Depth to Water: **216.8 ft 25Aug98**
(Ground surface)

GENERALIZED STRATIGRAPHY **Geologist's Log & Geophysical Logs**

Elevation of Reference Point: **m**

Height of Reference Point Above Ground Surface:

Depth of Surface Seal: **10.5 ft.**

Type of Surface Seal: **4x4 Concrete Pad**

0 - 4 ft : Backfill
4 - 9 ft : Sand
9 - 22 ft : Gravel
22 - 42.5 ft : Sandy gravel
42.5 - 64 ft : Sand
64 - 89 ft : Gravelly sand
89 - 102 ft : Silty sand - calcareous (97-100: Caliche)
102 - 108 ft : Sand (108-110: caliche)
108 - 114 ft : Silty sand
114 - 116 ft : Sand
116 - 124 ft : Silty sand
124 - 127 ft : Sand
127 - 159 ft : Silty sandy gravel (152-156: large cobbles)
159 - 161 ft : Gravelly sand
161 - 205 ft : Sandy gravel
205 - 262 ft : Silty sandy gravel

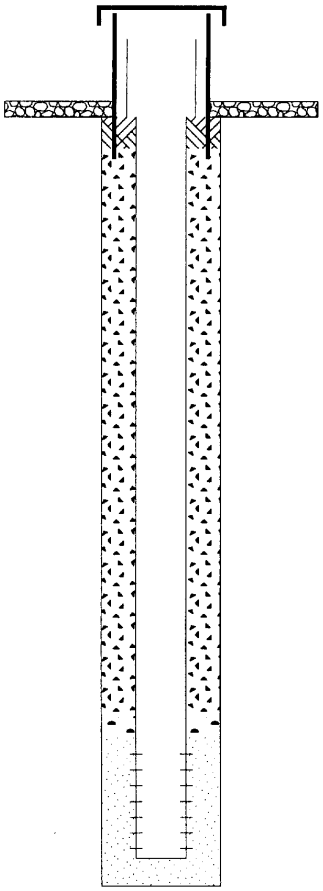

262 ft : Borehole drilled depth

0 - 262 ft : 9.125-in. 8-5/8" Temp. carbon steel csg.

Fill	*Casing*	*Screen*
0 - 10.5 ft : 9.125-inch hole Cement Seal		
10.5 - 204.5 ft : 9.125-inch hole Bentonite Chips		
204.5 - 211 ft : 9.125-inch hole Bentonite Pellets		
211 - 217.04 ft : 9.125-inch hole 20-40 Silica Sand	217.04 - 0 ft : 4 inch 4" SS Sch. 5 Csg.	217.04 - 252.13 ft : 4 inch 4" Wire Wrap SS .010 Slot Screen
217.04 - 252.13 ft : 9.125-inch hole 20-40 Silica Sand	252.13 - 252.45 ft : 4 inch 4" SS End Cap	
252.13 - 262 ft : 9.125-inch hole 20-40 Silica Sand		

Drawing By: **TGB**
Reference: **Hanford Wells**
Revision: **0**
Revision Date: **21Sep98**
Print Date: **28Dec98**

Report Form: WELLS Project File: WELLS.GPJ

Figure C-1. Well 299-W10-26 Construction and Completion Summary (1 of 2)

SUMMARY OF CONSTRUCTION DATA AND FIELD OBSERVATIONS
RESOURCE PROTECTION WELL - 299-W10-26

WELL DESIGNATION	:	**299-W10-26**
CERCLA UNIT	:	
RCRA FACILITY	:	
DEPTH DRILLED (GS)	:	**262.0 ft**
MEASURED DEPTH (GS)	:	
AVAILABLE LOGS	:	**Data not available**
DATE EVALUATED	:	**Data not available**
EVAL RECOMMENDATION	:	**Data not available**
LISTED USE	:	**Data not available**
CURRENT USER	:	**RCRA & Operations**
PUMP TYPE	:	**Data not available**
MAINTENANCE	:	**Data not available**
COMMENTS	:	**8-5/8" TUBEX Sys. 4-1/2" Reverse Cir. Drl. Pipe with Interchange**
TV SCAN COMMENTS	:	

Report Form: WELLS Project File: WELLS.GPJ

Drawing By:	**TGB**
Reference:	**Hanford Wells**
Revision:	**0**
Revision Date:	**21Sep98**
Print Date:	**28Dec98**

Figure C-1. Well 299-W10-26 Construction and Completion Summary (2 of 2)

0532883

WELL CONSTRUCTION AND COMPLETION SUMMARY

Drilling Method:	Cable Tool	Sample Method:	Grab/Split Spoon	WELL NUMBER:	299-W10-27 C3125
Drilling Fluid Used:	none	Additives Used:	water	TEMPORARY WELL NO:	Not Allowed
Driller's Name:	M. Wraspir	WA State Lic Nr:	1909	Coordinates: N	Not documented
Drilling Company:	RSI	Company Location:	Woodland, Ca.	Coordinates: E	Not documented
Date Started:	22Jan01	Date Completed:	23Mar01	Start Card #:	Not Available
				Elevation Ground Surface:	

Depth to Water: **220.63 ft ft 23Mar01**
(Ground surface)

Elevation of Reference Point: **m**

Height of Reference Point Above Ground Surface:

Depth of Surface Seal: **10.9 ft**

Type of Surface Seal: **4x4 Concrete Pad**

GENERALIZED STRATIGRAPHY **Geologist's Log**

0 - 1 ft : Construction gravel
1 - 4.5 ft : Silty SAND (mS)
4.5 - 8.5 ft : SAND (S)
8.5 - 24 ft : Sandy GRAVEL (sG)
24 - 38 ft : Silty Sandy GRAVEL (msG)

38 - 41.5 ft : Sandy GRAVEL (sG)
41.5 - 89 ft : SAND (S)

89 - 98.2 ft : Silt (M) Plio Pleistene top

98.2 - 102 ft : Caliche in Silty SAND (mS)
102 - 108 ft : Silty SAND (mS)
108 - 112 ft : Caliche in SAND(s)
112 - 117.5 ft : SAND (S)
117.5 - 120.5 ft : SILT (M(
120.5 - 124.5 ft : SAND (S)
124.5 - 220 ft : Silty Sandy GRAVEL (msG)-
Ringold E top

220 - 225 ft : Slightly Silty Gravelly SAND
225 - 268.7 ft : Silty Sandy Gravel (msg)

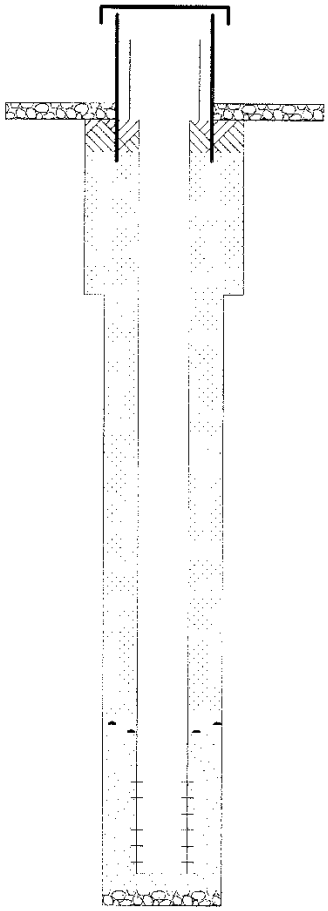

Fill	*Casing*	*Screen*
0 - 10.9 ft : 12-inch hole Cement Surface Seal	0 - 256 ft : 4 inch 4" 304 SS sch 5 csg.	
10.9 - 60 ft : 12-inch hole Grannular Bentonite		
60 - 204.6 ft : 9-inch hole Grannular Bentonite		
204.6 - 210 ft : 9-inch hole 1/4" Bentonite Pellets		221 - 256 ft : 4 inch 4" 304 SS .020 Slot wirewrap scrn
210 - 257.76 ft : 9-inch hole 10/20 Silica Sand		
257.76 - 268.7 ft : 9-inch hole 10/20 Silica Sand	256 - 257.86 ft : 4 inch 4" 304L SS Sump	
263.3 - 268.7 ft : 9-inch hole Slough		

268.7 ft : Borehole drilled depth

0 - 60 ft : 12-in. 11-3/4" CS Temp. csg set w/cable tool
60 - 268.7 ft : 9-in. 8-5/8" CS Temp. csg set w/ cable tool

Drawing By: **JEA**
Reference: **Hanford Wells**
Revision: **0**
Revision Date: **16Apr01**
Print Date: **16Apr01**

Report Form: WELLS Project File: WELLS.GPJ

Figure C-2. Well 299-W10-27 Construction and Completion Summary

0502372

WELL CONSTRUCTION AND COMPLETION SUMMARY

Drilling Method:	Air Rotary - TUBEX	Sample Method:	Grab/Split Spoon	WELL NUMBER:	299-W14-13 B8549
Drilling Fluid Used:	Reverse Air	Additives Used:	None	TEMPORARY WELL NO:	Not Allowed
Driller's Name:	Willie Franklin	WA State Lic Nr:	Not Available	Coordinates: N	Not documented
Drilling Company:	Layne Christensen	Company Location:	Salt Lake City, Ut	Coordinates: E	Not documented
Date Started:	26Aug98	Date Completed:	31Aug98	Start Card #:	Not Available
				Elevation Ground Surface:	Brass Marker

Depth to Water: **215.8 ft 31Aug98**
(Ground surface)

GENERALIZED STRATIGRAPHY **Geologist's Log & Geophysical Logs**

Elevation of Reference Point: **m**

Height of Reference Point Above Ground Surface:

Depth of Surface Seal: **9.6 ft.**

Type of Surface Seal: **4x4 Concrete Pad**

0 - 4 ft : Construction fill
4 - 14 ft : Sand
14 - 33 ft : Sandy gravel

33 - 95 ft : Sand

95 - 98 ft : Sand, sl calcareous
98 - 101 ft : Caliche
101 - 112 ft : Sandy gravel sl calcareous
112 - 125 ft : Sand

125 - 163 ft : Silty sandy gravel

163 - 210 ft : Sandy gravel

210 - 262 ft : Sandy gravel

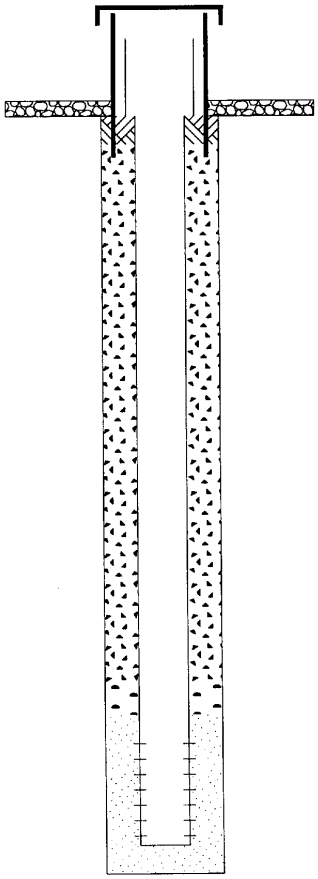

Fill	*Casing*	*Screen*
0 - 9.6 ft : 9.125-inch hole Cement Seal	0 - 216.62 ft : 4 inch 4" SS Sch. 5 Csg.	
9.6 - 195.1 ft : 9.125-inch hole Bentonite Chips		
195.1 - 206.4 ft : 9.125-inch hole Bentonite Pellets		216.62 - 251.73 ft : 4 inch 4" Wire Wrap SS .010 Slot Screen
206.4 - 252.05 ft : 9.125-inch hole 20-40 Silica Sand		
252.05 - 262 ft : 9.125-inch hole 20-40 Silica Sand	251.73 - 252.05 ft : 4 inch 4" SS End Cap	

262 ft : Borehole drilled depth

0 - 262 ft : 9.125-in. 8-5/8" CS Temp. Csg.

Report Form: WELLS Project File: WELLS.GPJ

Drawing By: **TGB**
Reference: **Hanford Wells**
Revision: **0**
Revision Date: **21Sep98**
Print Date: **28Dec98**

Figure C-3. Well 299-W14-13 Construction and Completion Summary (1 of 2)

SUMMARY OF CONSTRUCTION DATA AND FIELD OBSERVATIONS
RESOURCE PROTECTION WELL - 299-W14-13

WELL DESIGNATION	:	**299-W14-13**
CERCLA UNIT	:	
RCRA FACILITY	:	
DEPTH DRILLED (GS)	:	**262.0 ft**
MEASURED DEPTH (GS)	:	
AVAILABLE LOGS	:	**Data not available**
DATE EVALUATED	:	**Data not available**
EVAL RECOMMENDATION	:	**Data not available**
LISTED USE	:	**Data not available**
CURRENT USER	:	**RCRA & Operations**
PUMP TYPE	:	**Data not available**
MAINTENANCE	:	**Data not available**
COMMENTS	:	**8-5/8" TUBEX Sys. 4-1/2" Reverse Clr. Drl. Pipe with Interchange**
TV SCAN COMMENTS	:	

Report Form: WELLS Project File: WELLS.GPJ

Drawing By:	**TGB**
Reference:	**Hanford Wells**
Revision:	**0**
Revision Date:	**21Sep98**
Print Date:	**28Dec98**

Figure C-3. Well 299-W14-13 Construction and Completion Summary (2 of 2)

0502370

WELL CONSTRUCTION AND COMPLETION SUMMARY

Drilling Method:	Air Rotary - TUBEX	Sample Method:	Grab/Split Spoon	WELL NUMBER:	299-W14-14 B8547
Drilling Fluid Used:	Reverse Air	Additives Used:	None	TEMPORARY WELL NO:	Not Allowed
Driller's Name:	Randy Smith	WA State Lic Nr:	Not Available	Coordinates: N	Not documented
Drilling Company:	Layne Christensen	Company Location:	Salt Lake City, Ut	Coordinates: E	Not documented
Date Started:	08Oct98	Date Completed:	12Nov98	Start Card #:	Not Available
				Elevation Ground Surface:	Brass Marker

Depth to Water: 216 ft 24Oct98
(Ground surface) 217.42 ft 14Nov98

GENERALIZED STRATIGRAPHY: Geologist's Log & Geophysical Logs

Elevation of Reference Point: m

Height of Reference Point Above Ground Surface:

Depth of Surface Seal: 9.3 ft.

Type of Surface Seal: 4x4 Concrete Pad

0 - 4.5 ft : Backfill - Sand and gravel
4.5 - 7 ft : Silty Gravelly SAND
7 - 14.5 ft : Silty SAND
14.5 - 16.5 ft : Silty Sandy GRAVEL
16.5 - 33 ft : Sandy GRAVEL
33 - 86.5 ft : SAND

86.5 - 93.5 ft : SAND (trace of caliche @ 86')
93.5 - 123 ft : Silty SAND (Caliche 108 to 110')

123 - 145 ft : Sandy GRAVEL

145 - 209 ft : Sandy GRAVEL

209 - 217 ft : Gravelly SAND
217 - 360 ft : Silty Sandy GRAVEL

360 - 402 ft : Sandy GRAVEL

402 - 412 ft : Silty CLAY
412 - 415.5 ft : SILT
415.5 - 424 ft : SILT (trace of gravel)
424 - 428 ft : GRAVEL
428 - 438 ft : SILT
438 - 443 ft : Sandy GRAVEL

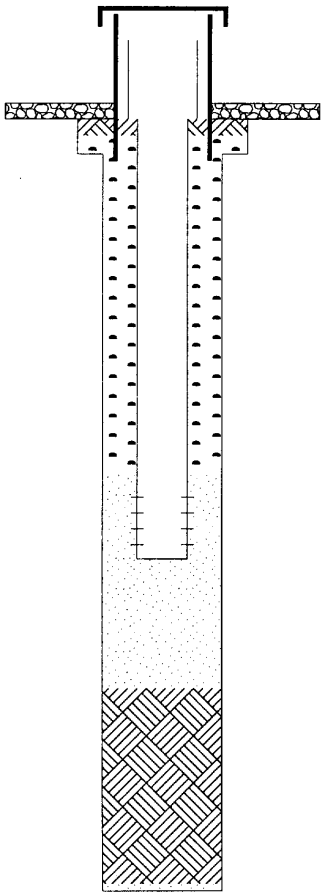

Fill	*Casing*	*Screen*
0 - 9.3 ft : 13-inch hole Cement Seal	0 - 216.98 ft : 9.125 inch 4" SS Sch. 5 Csg.	
9.3 - 20 ft : 13-inch hole Medium Bentonite Chunks		
20 - 202.3 ft : 9.125-inch hole Medium Bentonite Chunks		
202.3 - 203.8 ft : 9.125-inch hole 3/8 Bentonite Pellets		216.98 - 252 ft : 4 inch 4" SS Wire Wrap Screen - .010 Slot
203.8 - 252.3 ft : 9.125-inch hole 20-40 Silica Sand	252 - 252.3 ft : 9.125 inch 4" SS End Cap	
252.3 - 257.3 ft : 9.125-inch hole 20-40 Silica Sand		
257.3 - 326.6 ft : 9.125-inch hole 4-10, 6-9, 8-12, 8-16 & 10-20 Silica Sand		
326.6 - 438.8 ft : 9.125-inch hole Cement Grout		
438.8 - 443 ft : 9.125-inch hole 8-16 & 10-20 Silica Sand		

443 ft : Borehole drilled depth

0 - 20 ft : 13-in. 12-3/4" Temp. Csg. set w/Cable Tool
20 - 443 ft : 9.125-in. 8-5/8" Temp. Csg. Set w/Tubex air rotary-rev. air 4-1/2" Drl. Pipe

Drawing By:	JEA
Reference:	Hanford Wells
Revision:	0
Revision Date:	16Oct98
Print Date:	28Dec98

Report Form: WELLS Project File: WELLS.GPJ

Figure C-4. Well 299-W14-14 Construction and Completion Summary (1 of 2)

SUMMARY OF CONSTRUCTION DATA AND FIELD OBSERVATIONS
RESOURCE PROTECTION WELL - 299-W14-14

WELL DESIGNATION	:	**299-W14-14**
CERCLA UNIT	:	
RCRA FACILITY	:	
DEPTH DRILLED (GS)	:	**443.0 ft**
MEASURED DEPTH (GS)	:	**252.30 06Nov98**
AVAILABLE LOGS	:	**Geologist & Geophysical Logs**
DATE EVALUATED	:	**Data not available**
EVAL RECOMMENDATION	:	**Data not available**
LISTED USE	:	**RCRA Monitoring**
CURRENT USER	:	**RCRA & Operations**
PUMP TYPE	:	**Hydrostar**
MAINTENANCE	:	**Data not available**
COMMENTS	:	**12" Temp. Csg. to 20 ft.- Cable Tool. 20 ft. to 443 ft. 8-5/8" Temp. Csg.- Tubex Rev. Air w/4-1/2" D.P.**
TV SCAN COMMENTS	:	

Report Form: WELLS Project File: WELLS.GPJ

Drawing By: **JEA**
Reference: **Hanford Wells**
Revision: **0**
Revision Date: **16Oct98**
Print Date: **28Dec98**

Figure C-4. Well 299-W14-14 Construction and Completion Summary (2 of 2)

0526562

WELL CONSTRUCTION AND COMPLETION SUMMARY

Drilling Method:	Cable Tool/Air Rotary	Sample Method:	Grab/Split Spoon	WELL NUMBER:	299-W14-15 C3114
Drilling Fluid Used:	NA/Air	Additives Used:	None	TEMPORARY WELL NO:	Not Allowed
Driller's Name:	M. Wraspir	WA State Lic Nr:	1909	Coordinates: N	Not documented
Drilling Company:	RSI	Company Location:	Woodland, Ca.	Coordinates: E	Not documented
Date Started:	17Aug00	Date Completed:	01Sep00	Start Card #:	Ro37802
				Elevation Ground Surface:	

Depth to Water: 219.8 ft 05Sep00
(Ground surface)

Elevation of Reference Point: m

Height of Reference Point Above Ground Surface:

Depth of Surface Seal: 13.5 ft.

Type of Surface Seal: 4x4 Concrete Pad

GENERALIZED STRATIGRAPHY Geologist's Log

0 - 2 ft : Silty SAND
2 - 19 ft : Gravelly Silty SAND
19 - 37 ft : Silty Sandy GRAVEL
37 - 68 ft : SAND
68 - 74 ft : Silty SAND
74 - 88 ft : SAND
88 - 103 ft : Silty SAND
103 - 118 ft : Slightly Silty Gravelly SAND
118 - 123 ft : Slightly Silty SAND
123 - 142 ft : Silty Sandy GRAVEL
142 - 143 ft : SAND
143 - 175 ft : Sandy GRAVEL
175 - 221 ft : Sandy GRAVEL
221 - 260 ft : Silty Sandy GRAVEL

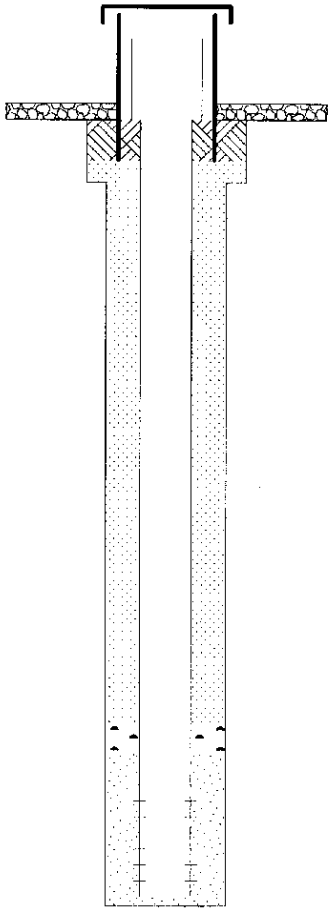

Fill	Casing	Screen
0 - 13.5 ft : 12-inch hole Cement Surface Seal	0 - 219.75 ft : 4 inch 4" 304 SS Sch 5 well csg.	
13.5 - 20.7 ft : 12-inch hole Granular Bentonite		
20.7 - 199.3 ft : 9-inch hole Granular Bentonite		
199.3 - 209.9 ft : 9-inch hole Bentonite Pellets		219.75 - 254.62 ft : 4 inch SS Wire Wrap .020 slot scrn.
256.7 - 209.9 ft : 9-inch hole 10/20 Silica Sand		
260 - 256.7 ft : 9-inch hole 10/20 Silica Sand	254.62 - 256.7 ft : 4 inch 4" SS Sump	

260 ft : Borehole drilled depth

0 - 20.7 ft : 12-in. 11-3/4" CS Temp. csg. drl w/cable tool
20.7 - 260 ft : 9-in. 8-5/8" CS Temp. csg. drl w/air rotary (csg hammer)

Drawing By: JEA
Reference: Hanford Wells
Revision: 0
Revision Date: 22Sep00
Print Date: 22Sep00

Report Form: WELLS Project File: WELLS.GPJ

Figure C-5. Well 299-W14-15 Construction and Completion Summary (1 of 2)

SUMMARY OF CONSTRUCTION DATA AND FIELD OBSERVATIONS
RESOURCE PROTECTION WELL - 299-W14-15

WELL DESIGNATION	:	**299-W14-15**
CERCLA UNIT	:	
RCRA FACILITY	:	
DEPTH DRILLED (GS)	:	**260.0 ft**
MEASURED DEPTH (GS)	:	**260.0 05Sep00**
AVAILABLE LOGS	:	**Geologist**
DATE EVALUATED	:	**Data not available**
EVAL RECOMMENDATION	:	**Data not available**
LISTED USE	:	**RCRA monitoring/sampling**
CURRENT USER	:	**RCRA & Operations**
PUMP TYPE	:	**Hydrostar**
MAINTENANCE	:	**Data not available**
COMMENTS	:	**Cable tool to 20.7 ft w/11-3/4" CS csg Air Rotary from 20.7 to 260 ft w/8-5/8" CS csg.**
TV SCAN COMMENTS	:	

Report Form: WELLS Project File: WELLS.GPJ

Drawing By: **JEA**
Reference: **Hanford Wells**
Revision: **0**
Revision Date: **22Sep00**
Print Date: **22Sep00**

Figure C-5. Well 299-W14-15 Construction and Completion Summary (2 of 2)

0540441

WELL CONSTRUCTION AND COMPLETION SUMMARY

Drilling Method:	Cable Tool	Sample Method:	Grab/Split Spoon	WELL NUMBER:	299-W14-18 C3396
Drilling Fluid Used:	None	Additives Used:	None	TEMPORARY WELL NO:	Not Allowed
Driller's Name:	M. Waspir	WA State Lic Nr:	1909	Coordinates: N	Not documented
Drilling Company:	RSI	Company Location:	Woodland, Ca.	Coordinates: E	Not documented
Date Started:	30Aug01	Date Completed:	01Nov01	Start Card #:	R037816
				Elevation Ground Surface:	

Depth to Water: **220.45 ft** **07Nov01**
(Ground surface)

GENERALIZED STRATIGRAPHY **Geologist's Log**

0 - 0.5 ft : Drill Pad Material
0.5 - 8 ft : Silty Sand
8 - 13 ft : Sand
13 - 34 ft : Sandy Gravel

34 - 88.5 ft : Sand

88.5 - 114 ft : Sandy Silt

114 - 120 ft : Silty Sand
120 - 125 ft : Sandy Silt
125 - 145 ft : Gravelly Silt

145 - 155 ft : Silty Gravel

155 - 160 ft : Gravelly Silt
160 - 165 ft : Silty Gravel
165 - 190 ft : Gravelly Silt

190 - 200 ft : Sandy Silt

200 - 205 ft : Gravelly Sandy Silt
205 - 210 ft : Silty Gravel
210 - 215 ft : Sandy Silt
215 - 220 ft : Gravelly Silt
220 - 235 ft : Gravelly Sandy Silt

235 - 240 ft : Gravelly Silt
240 - 261.5 ft : Gravelly Sandy Silt

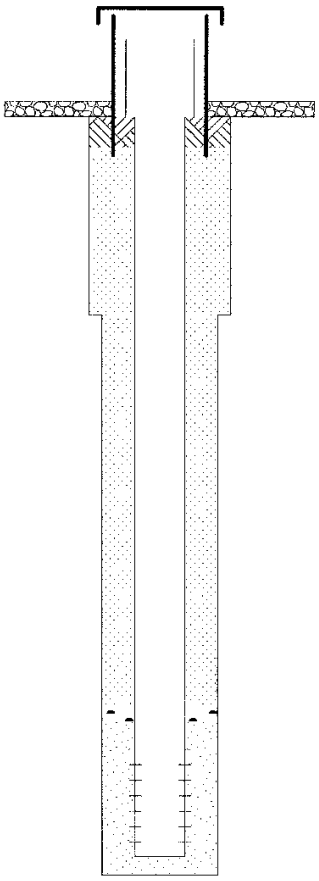

Elevation of Reference Point: **m**

Height of Reference Point Above Ground Surface:

Depth of Surface Seal: **10.5 ft**

Type of Surface Seal: **4x4 Concrete Pad**

Fill	*Casing*	*Screen*
0 - 10.5 ft : 11-inch hole Cement Surface Seal	0 - 218.06 ft : 4 inch 304L SS sch 5 csg	
10.5 - 68.6 ft : 11-inch hole Granular Bentonite		
68.6 - 203.3 ft : 9-inch hole Granular Bentonite		
203.3 - 208.4 ft : 9-inch hole 1/4" Bentonite Pellets		218.06 - 253.05 ft : 4 inch 304L SS Wire Wrap .020 slot scrn
208.4 - 255.05 ft : 9-inch hole 10/20 Silica Sand		
255.05 - 261.5 ft : 9-inch hole 10/20 Silica Sand	253.05 - 255.05 ft : 4 inch 304L SS Sump	

261.5 ft : Borehole drilled depth

0 - 68.6 ft : 11-in. Cable Tool 10-3/4" CS Temp csg to 68.6 ft
68.6 - 261.5 ft : 9-in. Cable Tool 8-5/8" CS Temp csg to 261.5 ft

Drawing By: **JEA**
Reference: **Hanford Wells**
Revision: **0**
Revision Date: **13Nov01**
Print Date: **13Nov01**

Report Form: WELLS Project File: WELLS.GPJ

Figure C-6. Well 299-W14-18 Construction and Completion Summary (1 of 2)

SUMMARY OF CONSTRUCTION DATA AND FIELD OBSERVATIONS
RESOURCE PROTECTION WELL - 299-W14-18

WELL DESIGNATION	:	**299-W14-18**
CERCLA UNIT	:	
RCRA FACILITY	:	
DEPTH DRILLED (GS)	:	**261.5 ft**
MEASURED DEPTH (GS)	:	**255.05 07Nov01**
AVAILABLE LOGS	:	**Geologist & Geophysical**
DATE EVALUATED	:	**Data not available**
EVAL RECOMMENDATION	:	**Data not available**
LISTED USE	:	**RCRA Monitoring**
CURRENT USER	:	**RCRA & Operations**
PUMP TYPE	:	**Not Documented**
MAINTENANCE	:	**Data not available**
COMMENTS	:	**Cable Tool 10-3/4" CS csg to 68.6 ft & 8-5/8" CS csg to 261.5 ft**
TV SCAN COMMENTS	:	

Report Form: WELLS Project File: WELLS.GPJ

Drawing By:	JEA
Reference:	Hanford Wells
Revision:	0
Revision Date:	13Nov01
Print Date:	13Nov01

Figure C-6. Well 299-W14-18 Construction and Completion Summary (2 of 2)

AS-BUILT WELL CONSTRUCTION AND COMPLETION SUMMARY

Drilling Method:	Becker Hammer	Sample Method:	Grab/Split Spoon	WELL NUMBER:	299-W14-19 C3957
Drilling Fluid Used:	Air	Additives Used:	None	TEMPORARY WELL NO:	Not Allowed
Driller's Name:	Paul Lodder	WA State Lic Nr:	1628	Coordinates: N	Not documented
Drilling Company:	Layne Christensen	Company Location:	Salt Lake City, Ut	Coordinates: E	Not documented
Date Started:	24Oct02	Date Completed:	13Nov02	Start Card #:	Not Available
				Elevation Ground Surface:	

Depth to Water: **223.55 ft ft 04Nov02**
(Ground surface)

Elevation of Reference Point: **m**

Height of Reference Point Above Ground Surface:

Depth of Surface Seal: **0 ft**

Type of Surface Seal: **4x4 Concrete Pad**

GENERALIZED STRATIGRAPHY **Geologist's Log**

0 - 3 ft : Backfill
3 - 41 ft : silty SAND (mS)

41 - 50 ft : sandy GRAVEL (sG)
50 - 95 ft : SAND (S)

95 - 100 ft : silty SAND (mS)
100 - 109 ft : SILT (m)
109 - 115 ft : CALICHE
115 - 125 ft : silty SAND (mS)
125 - 130 ft : silty sandy GRAVEL (msG)
130 - 135 ft : sandy GRAVEL (sG)
135 - 145 ft : GRAVEL (G)
145 - 150 ft : silty sandy GRAVEL (msG)
150 - 175 ft : sandy GRAVEL (sG)

175 - 185 ft : silty sandy GRAVEL (msG)
185 - 190 ft : sandy GRAVEL (sG)
190 - 200 ft : silty sandy GRAVEL (msG)
200 - 205 ft : SAND (S)
205 - 220 ft : sandy GRAVEL (sG)

220 - 225 ft : silty sandy GRAVEL (msG)
225 - 285 ft : sandy GRAVEL (sG)

285 - 295 ft : silty sandy GRAVEL (msG)
295 - 344 ft : sandy GRAVEL (sG)

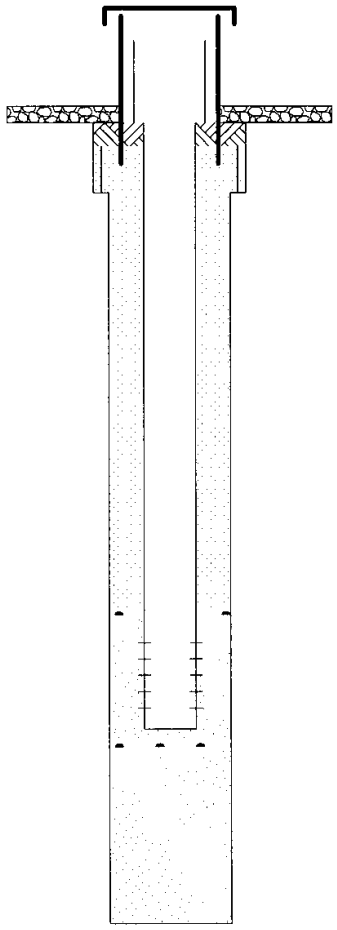

Fill	*Casing*	*Screen*
0 - 10 ft : 11.25-inch hole Cement surface seal	0 - 223.5 ft : 4 inch	
10 - 30 ft : 11.25-inch hole Granular Bentonite	10 - 30 ft : 10.75 inch Left in hole	
30 - 208.3 ft : 9-inch hole Granular Bentonite		
208.3 - 213.5 ft : 9-inch hole 1/4" Bentonite Pellets		223.5 - 258.5 ft : 4 inch
213.5 - 260.5 ft : 9-inch hole 10/20 Silica sand		
260.5 - 264.9 ft : 9-inch hole 10/20 Silica sand	258.5 - 260.5 ft : 4 inch 304L SS csg and sump	
264.9 - 269.5 ft : 9-inch hole 1/4" Bentonite Pellets		
269.5 - 344.3 ft : 9-inch hole 4/8 Silica sand		

344.3 ft : Borehole drilled depth

0 - 30 ft : 11.5-in. Auger 10-3/4" Temp CS csg
30 - 344.3 ft : 9-in. Becker Hammer 9" x 7" Temp CS csg

Drawing By: **JEA**
Reference: **Hanford Wells**
Revision:
Revision Date: **16Dec02**
Print Date: **16Dec02**

Report Form: WELLS Project File: WELLS.GPJ

Figure C-7. Well 299-W14-19 Construction and Completion Summary

AS-BUILT WELL CONSTRUCTION AND COMPLETION SUMMARY

Drilling Method:	Becker Hammer	Sample Method:	Grab/Split Spoon	WELL NUMBER:	299-W15-44 C3956
Drilling Fluid Used:	Air	Additives Used:	Not Documented	TEMPORARY WELL NO:	Not Allowed
Driller's Name:	Chris Dean	WA State Lic Nr:	2554	Coordinates: N	Not documented
Drilling Company:	Layne Christensen	Company Location:	Salt Lake City, Ut	Coordinates: E	Not documented
Date Started:	10Oct02	Date Completed:	23Oct02	Start Card #:	Not Documented
				Elevation Ground Surface:	

Depth to Water: 220.24 ft 17Oct02
(Ground surface)

Elevation of Reference Point: m

Height of Reference Point Above Ground Surface:

Depth of Surface Seal: 10.1 ft

Type of Surface Seal: 4x4 Concrete Pad

GENERALIZED STRATIGRAPHY Geologist's Log

0 - 15 ft : No Returns
15 - 27 ft : gravelly Sand (gS)
27 - 28.5 ft : Gravel (G)
28.5 - 35 ft : sandy Gravel (sG)
35 - 50 ft : silty Sand (mS)
50 - 105 ft : Sand (S)
105 - 125 ft : silty Sand (mS) - trace of caliche 113-114 ft
125 - 126.5 ft : gravelly Sand (gS)
126.5 - 141 ft : sandy Gravel (sG)
141 - 143 ft : Sand (S)
143 - 150 ft : sandy Gravel (sG)
150 - 165 ft : silty sandy Gravel (msG)
165 - 180 ft : sandy Gravel (sG)
180 - 185 ft : silty sandy Gravel (msG)
185 - 205 ft : sandy Gravel (sG)
205 - 210 ft : gravelly Sand (gS)
210 - 255 ft : sandy Gravel (sG)
255 - 285 ft : silty sandy Gravel (msG)
285 - 292 ft : SAND (S) - heaving
292 - 342 ft : sandy Gravel (sG)

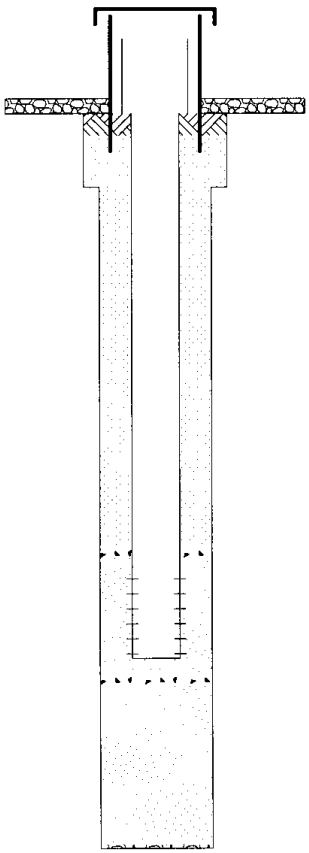

Fill	*Casing*	*Screen*
0 - 10.1 ft : 11.5-inch hole Cement Surface Seal	0 - 216.25 ft : 4 inch 304L SS sch 5 csg	
10.1 - 34.5 ft : 11.5-inch hole Granular Bentonite		
34.5 - 201.4 ft : 9-inch hole Granular Bentonite		
201.4 - 206.3 ft : 9-inch hole 1/4" Bentonite pellets		216.25 - 251.25 ft : 4 inch 304L SS Wire Wrap .020 slot scrn
206.3 - 253.25 ft : 9-inch hole 10/20 Silica Sand		
253.25 - 260.3 ft : 9-inch hole 10/20 Silica Sand	251.25 - 253.25 ft : 4 inch SS sump	
260.3 - 265.6 ft : 9-inch hole 1/4" Bentonite pellets		
265.6 - 340.3 ft : 9-inch hole 4/8 Silica Sand		
340.3 - 342 ft : 9-inch hole Muddy slough		

342 ft : Borehole drilled depth

0 - 34.5 ft : 11.5-in. Auger 10-3/4" Temp CS csg
34.5 - 342 ft : 9-in. Becker Hammer 9" Dual Wall CS csg

Drawing By: JEA
Reference: Hanford Wells
Revision: 0
Revision Date: 06Nov02
Print Date: 06Nov02

Report Form: WELLS Project File: WELLS.GPJ

Figure C-8. Well 299-W15-44 Construction and Completion Summary

0540436

WELL CONSTRUCTION AND COMPLETION SUMMARY

Drilling Method:	Air Rotary Drl & Drive	Sample Method:	Grab/Split Spoon	WELL NUMBER:	299-W15-765
Drilling Fluid Used:	Air	Additives Used:	None	Coordinates: N	Not documented
Driller's Name:	Mike Gomez	WA State Lic Nr:	Not Documented	Coordinates: E	Not documented
Drilling Company:	RSI	Company Location:	Woodland, Ca.	Start Card #:	R037816
Date Started:	19Sep01	Date Completed:	04Oct01	Elevation Ground Surface:	

TEMPORARY C3397 WELL NO: Not Allowed

Depth to Water: 219.8 ft 27Sep01
(Ground surface)

GENERALIZED STRATIGRAPHY Geologist's Log

Elevation of Reference Point: m

Height of Reference Point Above Ground Surface:

Depth of Surface Seal: 10.2 ft.

Type of Surface Seal: 4x4 Concrete Pad

0 - 2 ft : Drill Pad
2 - 5 ft : Gravelly Sand
5 - 25 ft : Sandy Gravel

25 - 30 ft : Gravel
30 - 35 ft : Silty Gravel
35 - 40 ft : Slightly Silty Gravelly Sand
40 - 92 ft : Sand

92 - 93 ft : Silty Sand
93 - 105 ft : Silt
105 - 110 ft : Gravelly Silt
110 - 117 ft : Sandy Silt
117 - 120 ft : Sand
120 - 125 ft : Sandy Silt
125 - 130 ft : Silt
130 - 135 ft : Sand
135 - 136 ft : Silty Gravel
136 - 140 ft : Gravel
140 - 150 ft : Sandy Gravel
150 - 151 ft : Gravelly Silty Sand
151 - 155 ft : Gravel
155 - 157 ft : Gravelly Sandy Silt
157 - 160 ft : Gravel
160 - 170 ft : Sandy Gravel
170 - 175 ft : Gravel
175 - 180 ft : Silty gravel
180 - 195 ft : Gravelly Sand
195 - 200 ft : Sandy gravel
200 - 220 ft : Silty Gravel

220 - 230 ft : Silty Sandy Gravel

230 - 235 ft : Gravel
235 - 240 ft : Silty Gravel
240 - 250 ft : Silty Sandy Gravel

250 - 255 ft : Gravel
255 - 265 ft : Sandy Gravel

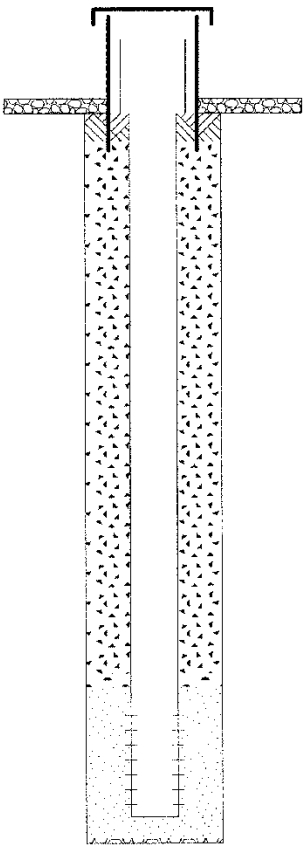

Fill	*Casing*	*Screen*
0 - 10.2 ft : 11-inch hole Cement Surface Seal	0 - 220 ft : 4 inch 304L SS sch 5 csg	
10.2 - 204.8 ft : 11-inch hole 8/20 Bentonite Crumbles		
204.8 - 209.5 ft : 11-inch hole 1/4" Bentonite Pellets		220 - 255 ft : 4 inch 304L SS Wire Wrap .020 slot scrn
209.5 - 257.1 ft : 11-inch hole 10/20 Silica Sand		
257.1 - 265 ft : 11-inch hole 10/20 Silica Sand	255 - 257.1 ft : 4 inch 304L SS Sump	
265 - 267 ft : 11-inch hole Slough		

267 ft : Borehole drilled depth

0 - 267 ft : 11-in. air Rotary Drl & Drive
10-5/8" CS Temp csg to 267 ft

Drawing By: JEA
Reference: Hanford Wells
Revision: 0
Revision Date: 08Nov01
Print Date: 08Nov01

Report Form: WELLS Project File: WELLS.GPJ

Figure C-9. Well 299-W15-765 Construction and Completion Summary (1 of 2)

SUMMARY OF CONSTRUCTION DATA AND FIELD OBSERVATIONS
RESOURCE PROTECTION WELL - 299-W15-765

WELL DESIGNATION	:	**299-W15-765**
CERCLA UNIT	:	
RCRA FACILITY	:	
DEPTH DRILLED (GS)	:	**267.0 ft**
MEASURED DEPTH (GS)	:	**257.1 27Sep01**
AVAILABLE LOGS	:	**Geologist & Geophysical**
DATE EVALUATED	:	**Data not available**
EVAL RECOMMENDATION	:	**Data not available**
LISTED USE	:	**RCRA Monitoring**
CURRENT USER	:	**RCRA & Operations**
PUMP TYPE	:	**Not Documented**
MAINTENANCE	:	**Data not available**
COMMENTS	:	**Air Rotary Drg & Drive 10-5/8" CS Temp csg to 265 ft**
TV SCAN COMMENTS	:	

Report Form: WELLS Project File: WELLS.GPJ

Drawing By:	**JEA**
Reference:	**Hanford Wells**
Revision:	**0**
Revision Date:	**08Nov01**
Print Date:	**08Nov01**

Figure C-9. Well 299-W15-765 Construction and Completion Summary (2 of 2)

C2 References

NAD83, 1991, *North American Datum of 1983*, as revised, National Geodetic Survey, Federal Geodetic Control Committee, Silver Spring, Maryland. Available at: http://www.ngs.noaa.gov/.

NAVD88, 1988, *North American Vertical Datum of 1988*, as revised, National Geodetic Survey, Federal Geodetic Control Committee, Silver Spring, Maryland. Available at: http://www.ngs.noaa.gov/.

This page intentionally left blank.

Appendix D

Analytical Methods for Routine Sampling Constituents

This page intentionally left blank.

Contents

D1 Introduction D-1

D2 References D-2

Table

Table D-1. Analytical Methods for WMA TX-TY Routine Sampling Constituents D-1

This page intentionally left blank.

D1 Introduction

Table D-1 provides analytical methods for routine sampling constituents at Waste Management Area (WMA) TX-TY.

Table D-1. Analytical Methods for WMA TX-TY Routine Sampling Constituents

CAS Number	Constituent (Alternate Name)	Analytical Method*
Inorganic Constituents		
ALKALINITY	Alkalinity	310.1, 2320
ALKALINITY	Bicarbonate alkalinity	310.1, 2320
ALKALINITY	Carbonate alkalinity	310.1, 2320
ALKALINITY	Hydroxide alkalinity	310.1, 2320
Anions		
16887-00-6	Chloride	300.0, 9056
16984-48-8	Fluoride	300.0, 9056
14797-55-8	Nitrate	300.0, 9056
14797-65-0	Sulfate	300.0, 9056
Metals		
7429-90-5	Aluminum	6020
7440-70-2	Calcium	6010
7440-47-3	Chromium	6010
18540-29-9	Hexavalent chromium	7196
7439-89-6	Iron	6010
7439-95-4	Magnesium	6010
7439-96-5	Manganese	6010
7440-02-0	Nickel	6010
7440-09-7	Potassium	6010
7440-09-7	Sodium	6010

*For EPA Methods 300.0, see EPA/600/R-93/100, *Methods for the Determination of Inorganic Substances in Environmental Samples*. For four-digit EPA methods, see SW-846, *Test Methods for Evaluating Solid Waste: Physical/Chemical Methods, Third Edition; Final Update V.*

CAS = Chemical Abstracts Service

D2 References

EPA/600/R-93/100, 1993, *Methods for the Determination of Inorganic Substances in Environmental Samples*, U.S. Environmental Protection Agency, Washington, D.C. Available at: https://nepis.epa.gov/Exe/ZyPURL.cgi?Dockey=30002U3P.txt.

SW-846, 2015, *Test Methods for Evaluating Solid Waste: Physical/Chemical Methods, Third Edition; Final Update V*, U.S. Environmental Protection Agency, Washington, D.C. Available at: https://www.epa.gov/hw-sw846.

Appendix E

Analytical Methods for Ecology No. 97-407 Appendix 5 Constituents

This page intentionally left blank.

Contents

E1 Introduction E-1

E2 References E-10

Table

Table E-1. Analytical Methods for Ecology Publication No. 97-407 Appendix 5 Constituents E-1

This page intentionally left blank.

E1 Introduction

Table E-1 provides analytical methods for Ecology Publication No. 97-407, *Chemical Test Methods for Designating Dangerous Waste WAC 173-303-090 & -100*, Appendix 5 constituents.

Table E-1. Analytical Methods for Ecology Publication No. 97-407 Appendix 5 Constituents

CAS Number	Waste Constituent (Alternate Name)	Analytical Method[a]
Inorganic Constituents		
7440-36-0	Antimony	6010
7440-38-2	Arsenic	6010
7440-39-3	Barium	6010
7440-41-7	Beryllium	6020
7440-43-9	Cadmium	6010
7440-47-3	Chromium	6010
7440-48-4	Cobalt	6020
7440-50-8	Copper	6010
57-12-5	Cyanide (total)	335.4, 9012, 9014, 4500
7439-92-1	Lead	6010
7439-97-6	Mercury	7470
7440-02-0	Nickel	6010
7782-49-2	Selenium	6010
7440-22-4	Silver	6010
18496-25-8	Sulfide (total)	376.1, 4500D, 9034
7440-28-0	Thallium	6020
7440-31-5	Tin	6010
7440-62-2	Vanadium	6020
7440-66-6	Zinc	6010
Volatile Organic Compounds (VOCs)		
75-34-3	1,1-Dichloroethane	8260 VOA
75-35-4	1,1-Dichloroethene (1,1-Dichloroethylene)	8260 VOA
71-55-6	1,1,1-Trichloroethane	8260 VOA
630-20-6	1,1,1,2-Tetrachloroethane	8260 VOA
79-00-5	1,1,2-Trichloroethane	8260 VOA
79-34-5	1,1,2,2-Tetrachloroethane	8260 VOA
96-12-8	1,2-Dibromo-3-Chloropropane	8260 VOA

Table E-1. Analytical Methods for Ecology Publication No. 97-407 Appendix 5 Constituents

CAS Number	Waste Constituent (Alternate Name)	Analytical Method[a]
106-93-4	1,2-Dibromoethane (Ethylene dibromide [EDB])	8260 VOA
107-06-2	1,2-Dichloroethane	8260 VOA
78-87-5	1,2-Dichloropropane	8260 VOA
156-60-5	trans-1,2-Dichloroethylene	8260 VOA
96-18-4	1,2,3-Trichloropropane	8260 VOA
10061-01-5	cis-1,3-Dichloropropene	8260 VOA
10061-02-6	trans-1,3-Dichloropropene	8260 VOA
110-57-6	trans-1,4-Dichloro-2-butene	8260 VOA
78-93-3	2-Butanone (Methyl ethyl ketone [MEK])	8260 VOA
67-64-1	2-Propanone (Acetone)	8260 VOA
591-78-6	2-Hexanone (Methyl butyl ketone [MBK])	8260 VOA
108-10-1	4-Methyl-2-Pentanone (Methyl isobutyl ketone [MIBK])	8260 VOA
75-05-8	Acetonitrile (Methyl cyanide)	8260 VOA
107-02-8	Acrolein	8260 VOA
107-13-1	Acrylonitrile	8260 VOA
107-05-1	Allyl chloride	8260 VOA
71-43-2	Benzene	8260 VOA
75-27-4	Bromodichloromethane	8260 VOA
75-25-2	Bromoform	8260 VOA
75-15-0	Carbon disulfide	8260 VOA
56-23-5	Carbon tetrachloride	8260 VOA
108-90-7	Chlorobenzene	8260 VOA
75-00-3	Chloroethane	8260 VOA
67-66-3	Chloroform	8260 VOA
126-99-8	Chloroprene (chloro-1,3-butadiene;2-)	8260 VOA
124-48-1	Dibromochloromethane	8260 VOA
106-46-7	P-Dichlorobenzene (1,4-Dichlorobenzene)	8260 VOA

Table E-1. Analytical Methods for Ecology Publication No. 97-407 Appendix 5 Constituents

CAS Number	Waste Constituent (Alternate Name)	Analytical Method[a]
75-71-8	Dichlorodifluoromethane	8260 VOA
100-41-4	Ethylbenzene	8260 VOA
97-63-2	Ethyl methacrylate	8260 VOA
78-83-1	Isobutanol (Isobutyl alcohol)	8260 VOA
126-98-7	Methacrylonitrile (2-propenenitrile, 2-methyl-)	8260 VOA
74-83-9	Methyl bromide (Bromomethane)	8260 VOA
74-87-3	Methyl chloride (Chloromethane)	8260 VOA
74-88-4	Methyl iodide (Iodomethane)	8260 VOA
80-62-6	Methyl methacrylate (2-Propenoic acid, 2-methyl-, methyl ester)	8260 VOA
74-95-3	Methylene bromide (Dibromomethane)	8260 VOA
75-09-2	Methylene chloride (Dichloromethane)	8260 VOA
107-12-0	Propionitrile (Ethyl cyanide)	8260 VOA
100-42-5	Styrene	8260 VOA
127-18-4	Tetrachloroethene (tetrachloroethylene, perchloroethylene)	8260 VOA
108-88-3	Toluene	8260 VOA
79-01-6	Trichloroethylene (TCE) (Trichloroethene)	8260 VOA
75-69-4	Trichlorofluoromethane	8260 VOA
108-05-4	Vinyl acetate	8260 VOA
75-01-4	Vinyl chloride (Chloroethene, chloroethylene)	8260 VOA
1330-20-7	Xylene (Total)(Mixed isomers)	8260 VOA
Semivolatile Organic Compounds (SVOCs)		
134-32-7	1-Naphthylamine	8270 SVOA
95-50-1	1,2-Dichlorobenzene (o-Dichlorobenzene)	8270 SVOA
120-82-1	1,2,4-Trichlorobenzene	8270 SVOA

Table E-1. Analytical Methods for Ecology Publication No. 97-407 Appendix 5 Constituents

CAS Number	Waste Constituent (Alternate Name)	Analytical Method[a]
95-94-3	1,2,4,5-Tetrachlorobenzene	8270 SVOA
123-91-1	1,4-Dioxane (1,4-Diethylene dioxide)	8270 SVOA
130-15-4	1,4-Naphthoquinone	8270 SVOA
53-96-3	2-Acetylaminofluorene	8270 SVOA
91-58-7	2-Chloronaphthalene (Beta-chloronaphthalene)	8270 SVOA
95-57-8	2-Chlorophenol	8270 SVOA
95-48-7	2-Methylphenol (o-Cresol)	8270 SVOA
91-57-6	2-Methylnaphthalene	8270 SVOA
91-59-8	2-Naphthylamine	8270 SVOA
88-75-5	2-Nitrophenol (o-Nitrophenol)	8270 SVOA
109-06-8	2-Picoline	8270 SVOA
58-90-2	2,3,4,6-Tetrachlorophenol	8270 SVOA
120-83-2	2,4-Dichlorophenol	8270 SVOA
105-67-9	2,4-Dimethylphenol (2,4-Xylenol)	8270 SVOA
51-28-5	2,4-Dinitrophenol	8270 SVOA
121-14-2	2,4-Dinitrotoluene	8270 SVOA
95-95-4	2,4,5-Trichlorophenol	8270 SVOA
88-06-2	2,4,6-Trichlorophenol	8270 SVOA
87-65-0	2,6-Dichlorophenol	8270 SVOA
606-20-2	2,6-Dinitrotoluene	8270 SVOA
56-49-5	3-Methylcholanthrene	8270 SVOA
108-39-4	3-Methylphenol (m-Cresol)	8270 SVOA
106-44-5	4-Methylphenol (p-Cresol)	8270 SVOA
91-94-1	3,3′-Dichlorobenzidine	8270 SVOA
119-93-7	3,3′-Dimethylbenzidine	8270 SVOA
92-67-1	4-Aminobiphenyl	8270 SVOA
101-55-3	4-Bromophenyl phenyl ether	8270 SVOA

Table E-1. Analytical Methods for Ecology Publication No. 97-407 Appendix 5 Constituents

CAS Number	Waste Constituent (Alternate Name)	Analytical Method[a]
59-50-7	4-Chloro-3-methylphenol (p-Chloro-m-cresol)	8270 SVOA
7005-72-3	4-Chlorophenyl phenyl ether	8270 SVOA
56-57-5	4-Nitroquinoline 1-oxide	8270 SVOA
534-52-1	4,6-Dinitro-O-cresol (4,6-Dinitro-2-methyl phenol)	8270 SVOA
99-55-8	5-Nitro-o-toluidine (methyl-5-nitroaniline;2-)	8270 SVOA
57-97-6	7,12-Dimethylbenz[a]anthracene	8270 SVOA
83-32-9	Acenaphthene	8270 SVOA
208-96-8	Acenaphthylene	8270 SVOA
98-86-2	Acetophenone	8270 SVOA
62-53-3	Aniline	8270 SVOA
120-12-7	Anthracene	8270 SVOA
140-57-8	Aramite	8270 SVOA
56-55-3	Benz[a]anthracene (Benzo[a]anthracene)	8270 SIM
205-99-2	Benz[e]acephenanthrylene (Benzo[b]fluoranthene)	8270 SIM
207-08-9	Benzo[k]fluoranthene	8270 SIM
191-24-2	Benzo[ghi]perylene	8270 SIM
50-32-8	Benzo[a]pyrene	8270 SIM
100-51-6	Benzyl alcohol	8270 SVOA
111-91-1	Bis(2-chloroethoxy)methane	8270 SVOA
111-44-4	Bis(2-chloroethyl)ether	8270 SVOA
108-60-1	Bis(2-chloro-1-methylethyl)ether (2,2'-Oxybis[1-chloropropane])	8270 SVOA
117-81-7	Bis(2-ethylhexyl) phthalate	8270 SVOA
85-68-7	Butyl benzyl phthalate (Benzyl butyl phthalate)	8270 SVOA
106-47-8	p-Chloroaniline (4-Chloroaniline)	8270 SVOA
510-15-6	Chlorobenzilate	8270 SVOA
218-01-9	Chrysene	8270 SVOA
2303-16-4	Diallate	8270 SVOA

Table E-1. Analytical Methods for Ecology Publication No. 97-407 Appendix 5 Constituents

CAS Number	Waste Constituent (Alternate Name)	Analytical Method[a]
53-70-3	Dibenz[a,h]anthracene (Dibeznanthracene, 1,2,5,6-)	8270 SIM
132-64-9	Dibenzofuran	8270 SVOA
541-73-1	m-Dichlorobenzene (1,3-Dichlorobenzene)	8270 SVOA
84-66-2	Diethyl phthalate	8270 SVOA
297-97-2	O,O-Diethyl O-2-pyrazinyl phosphorothioate	8270 SVOA
60-51-5	Dimethoate	8270 SVOA
60-11-7	p-(Dimethylamino)azobenzene	8270 SVOA
122-09-8	alpha, alpha-Dimethylphenethylamine	8270 SVOA
131-11-3	Dimethyl phthalate	8270 SVOA
84-74-2	Di-n-butylphthalate (Dibutyl phthalate)	8270 SVOA
99-65-0	m-Dinitrobenzene (1,3-Dinitrobenzene)	8270 SVOA
117-84-0	Di-n-octylphthalate	8270 SVOA
88-85-7	Dinoseb (2-sec-Butyl-4,6-dinitrophenol)	8151 Herbicides
122-39-4	Diphenylamine	8270 SVOA
298-04-4	Disulfoton	8270 SVOA
62-50-0	Ethyl methanesulfonate	8270 SVOA
52-85-7	Famphur	8270 SVOA
206-44-0	Fluoranthene	8270 SVOA
86-73-7	9H-Fluorene (Fluorene)	8270 SVOA
118-74-1	Hexachlorobenzene	8270 SIM
87-68-3	Hexachlorobutadiene	8270 SVOA
77-47-4	Hexachlorocyclopentadiene	8270 SVOA
67-72-1	Hexachloroethane	8270 SVOA
70-30-4	Hexachlorophene	8270 SVOA
1888-71-7	Hexachloropropene	8270 SVOA
193-39-5	Indeno(1,2,3-Cd)Pyrene	8270 SIM
465-73-6	Isodrin	8270 SVOA
78-59-1	Isophorone	8270 SVOA
120-58-1	Isosafrole	8270 SVOA

Table E-1. Analytical Methods for Ecology Publication No. 97-407 Appendix 5 Constituents

CAS Number	Waste Constituent (Alternate Name)	Analytical Method[a]
143-50-0	Kepone	8270 SVOA
91-80-5	Methapyrilene	8270 SVOA
66-27-3	Methyl methanesulfonate	8270 SVOA
298-00-0	Methyl parathion (O,O-dimethyl O-P-nitrophenyl, phosphorothioate)	8270 SVOA
91-20-3	Naphthalene	8270 SVOA
98-95-3	Nitrobenzene	8270 SVOA
88-74-4	o-Nitroaniline (2-Nitroaniline)	8270 SVOA
99-09-2	m-Nitroaniline (3-Nitroaniline)	8270 SVOA
100-01-6	p-Nitroaniline (4-Nitroaniline)	8270 SVOA
100-02-7	p-Nitrophenol (4-Nitrophenol)	8270 SVOA
924-16-3	N-Nitrosodi-n-butylamine	8270 SVOA
55-18-5	N-Nitrosodiethylamine	8270 SVOA
62-75-9	N-Nitrosodimethylamine (Dimethyl Nitrosamine)	8270 SVOA
86-30-6	N-Nitrosodiphenylamine	8270 SVOA
621-64-7	n-Nitroso-di-n-dipropylamine (N-Nitrosodipropylamine; Di-n-propylnitrosamine)	8270 SVOA
10595-95-6	N-Nitrosomethylethalamine (Ethanamine, N-methyl-N-nitroso-)	8270 SVOA
59-89-2	n-Nitrosomorpholine	8270 SVOA
100-75-4	N-Nitrosopiperidine	8270 SVOA
930-55-2	N-Nitrosopyrrolidine	8270 SVOA
56-38-2	Parathion	8270 SVOA
608-93-5	Pentachlorobenzene	8270 SVOA
76-01-7	Pentachloroethane	8270 SVOA
82-68-8	Pentachloronitrobenzene	8270 SVOA
87-86-5	Pentachlorophenol	8270 SVOA
62-44-2	Phenacetin	8270 SVOA
85-01-8	Phenanthrene	8270 SVOA
108-95-2	Phenol	8270 SVOA

Table E-1. Analytical Methods for Ecology Publication No. 97-407 Appendix 5 Constituents

CAS Number	Waste Constituent (Alternate Name)	Analytical Method[a]
106-50-3	p-Phenylenediamine	8270 SVOA
298-02-2	Phorate (Phosphorodithioic acid, O,O-Diethyl S-(Ethylthio)methyl ester)	8270 SVOA
23950-58-5	Pronamide	8270 SVOA
129-00-0	Pyrene	8270 SVOA
110-86-1	Pyridine	8270 SVOA
94-59-7	Safrole	8270 SVOA
3689-24-5	Tetraethyl dithiopyrophosphate	8270 SVOA
95-53-4	o-Toluidine (methylaniline;2-)	8270 SVOA
126-68-1	O,O,O-Triethyl phosphorothioate	8270 SVOA
99-35-4	sym-Trinitrobenzene (trinitrobenzene;1,3,5-)	8270 SVOA
12674-11-2	Aroclor 1016	8270 SVOA
11104-28-2	Aroclor 1221	8270 SVOA
11141-16-5	Aroclor 1232	8270 SVOA
53469-21-9	Aroclor 1242	8270 SVOA
12672-29-6	Aroclor 1248	8270 SVOA
11097-69-1	Aroclor 1254	8270 SVOA
11096-82-5	Aroclor 1260	8270 SVOA
Pesticides		
72-54-8	4,4′-DDD	8081 Pesticides
72-55-9	4,4′-DDE	8081 Pesticides
50-29-3	4,4′-DDT	8081 Pesticides
309-00-2	ALDRIN	8081 Pesticides
319-84-6	alpha-BHC (hexachlorocyclohexane;alpha)	8081 Pesticides
319-85-7	beta-BHC (hexachlorocyclohexane;beta-)	8081 Pesticides
319-86-8	delta-BHC (hexachlorocyclohexane;delta-)	8081 Pesticides
58-89-9	gamma-BHC (Lindane; hexachlorocyclohexane)	8081 Pesticides
57-74-9	Chlordane	8081 Pesticides
60-57-1	Dieldrin	8081 Pesticides

Table E-1. Analytical Methods for Ecology Publication No. 97-407 Appendix 5 Constituents

CAS Number	Waste Constituent (Alternate Name)	Analytical Method[a]
959-98-8	Endosulfan I	8081 Pesticides
33213-65-9	Endosulfan II	8081 Pesticides
1031-07-8	Endosulfan sulfate	8081 Pesticides
72-20-8	Endrin	8081 Pesticides
7421-93-4	Endrin aldehyde	8081 Pesticides
76-44-8	Heptachlor	8081 Pesticides
1024-57-3	Heptachlor epoxide	8081 Pesticides
72-43-5	Methoxychlor	8081 Pesticides
8001-35-2	Toxaphene	8081 Pesticides
Herbicides		
94-75-7	2,4-D (2,4-Dichlorophenoxy acetic acid)	8151 Herbicides
93-76-5	2,4,5-T (2,4,5-Trichlorophenoxyacetic acid)	8151 Herbicides
93-72-1	Silvex (2,4,5-TP)	8151 Herbicides
Polychlorinated Dibenzodioxins and Polychlorinated Dibenzofurans		
1746-01-6	2,3,7,8-Tetrachlorodibenzo-p-dioxin	8290 Dioxins
Multiple CAS numbers	Polychlorinated dibenzo-p-dioxins[b]	8290 Dioxins
Multiple CAS numbers	Polychlorinated dibenzofurans[c]	8290 Dioxins

Note: CAS numbers and constituents from Ecology Publication No. 97-407, *Chemical Test Methods For Designating Dangerous Waste WAC 173-303-090 & -100*, Appendix 5.

a. For EPA Method 335.4, see EPA/600/R-93/100, *Methods for the Determination of Inorganic Substances in Environmental Samples*. For EPA Method 376.1, see EPA/600/4-79/020, *Methods for Chemical Analysis of Water and Wastes*. For four-digit EPA methods, see SW-846, *Test Methods for Evaluating Solid Waste: Physical/Chemical Methods, Third Edition; Final Update V*.

b. This category contains congener chemicals, including tetrachlorodibenzo-p-dioxins, pentachlorodibenzo-p-dioxins, and hexachlorodibenzo-p-dioxins.

c. This category contains congener chemicals, including tetrachlordibenzofurans, pentachlorodibenzofurans, and hexachlorodibenzofurans.

CAS = Chemical Abstracts Service

SIM = selected ion monitoring

SVOA = semivolatile organic analysis

VOA = volatile organic analysis

E2 References

Ecology Publication No. 97-407, 2014, *Chemical Test Methods For Designating Dangerous Waste WAC 173-303-090 & -100*, Hazardous Waste and Toxics Reduction Program, Washington State Department of Ecology, Olympia, Washington. Available at: https://fortress.wa.gov/ecy/publications/publications/97407.pdf.

EPA/600/4-79/020, 1979, *Methods for Chemical Analysis of Water and Wastes*, U.S. Environmental Protection Agency, Washington, D.C. Available at: https://nepis.epa.gov/Exe/ZyPURL.cgi?Dockey=30000Q10.txt.

EPA/600/R-93/100, 1993, *Methods for the Determination of Inorganic Substances in Environmental Samples*, U.S. Environmental Protection Agency, Washington, D.C. Available at: https://nepis.epa.gov/Exe/ZyPURL.cgi?Dockey=30002U3P.txt.

SW-846, 2015, *Test Methods for Evaluating Solid Waste: Physical/Chemical Methods, Third Edition; Final Update V*, U.S. Environmental Protection Agency, Washington, D.C. Available at: https://www.epa.gov/hw-sw846.