START

0035548

ENGINEERING CHANGE NOTICE

Page 1 of 2

1. ECN 156097

Proj. ECN

2. ECN Category (mark one)	3. Originator's Name, Organization, MSIN, and Telephone No.		4. Date
Supplemental ☐ Direct Revision ☒ Change ECN ☐ Temporary ☐ Supersedure ☐ Discovery ☐ Cancel/Void ☐	G. J. Warwick/222-S Engineering Services/T6-12/3-3073		November 2, 1992
	5. Project Title/No./Work Order No. 222-S Wastewater to 216-S-26 Crib Sample Analysis Plan	6. Bldg./Sys./Fac. No. 222-S Laboratory	7. Impact Level 3E0
	8. Document Number Affected (include rev. and sheet no.) WHC-SD-WM-EV-075 REV. 0	9. Related ECN No(s). N/A	10. Related PO No. N/A

11a. Modification Work	11b. Work Package Doc. No.	11c. Complete Installation Work	11d. Complete Restoration (Temp. ECN only)
☐ Yes (fill out Blk. 11b) ☒ No (NA Blks. 11b, 11c, 11d)	N/A	N/A Cog. Engineer Signature & Date	N/A Cog. Engineer Signature & Date

12. Description of Change

Revise Sample Analysis Plan to reflect regulatory comments and to standardize the format of the document.

This document replaces WHC-SD-WM-EV-075 REV. 0

9413206.1274

APR 1994 RECEIVED EDMC

13a. Justification (mark one)	13b. Justification Details
Criteria Change ☒ Design Improvement ☐ Environmental ☐ As-Found ☐ Facilitate Const. ☐ Const. Error/Omission ☐ Design Error/Omission ☐	standardize Format incorporate Dept. of Ecology comments WHC comments.

14. Distribution (include name, MSIN, and no. of copies)

S. L. Brey	T6-12	(1)
L. P. Diediker	L4-88	(1)
D. G. Farwick	H4-16	(1)
D. L. Flyckt	R3-45	(1)
D. R. Speer	R1-48	(2)
G. J. Warwick	T6-12	(10)
Central Files	L8-04	(2)

RELEASE STAMP

OFFICIAL RELEASE BY WHC (5)

DATE DEC 17 1992

Sta. 4

A-7900-013 (11/88)

SUPPORTING DOCUMENT

1. Total Pages 27 ~~26~~

2. Title	3. Number	4. Rev No.
222-S LABORATORY COMPLEX WASTEWATER TO 216-S-26 CRIB SAMPLING AND ANALYSIS PLAN	WHC-SD-WM-EV-075	1

5. Key Words

Sampling and Analysis plan for wastewater from the 222-S Laboratory Complex to the 216-S-26 crib.

APPROVED FOR PUBLIC RELEASE V. Berkland 11/23/92

6. Author

Name: G. J. Warwick

Signature

Organization/Charge Code 12710/A2D90

7. Abstract

This document presents to 222-S Laboratory Complex wastewater sampling and analysis plan. The plan describes sampling methods, location, frequency, analytes and stream sources.

8. PURPOSE AND USE OF DOCUMENT - This document was prepared for use within the U.S. Department of Energy and its contractors. It is to be used only to perform, direct, or integrate work under U.S. Department of Energy contracts. This document is not approved for public release until reviewed.

PATENT STATUS - This document copy, since it is transmitted in advance of patent clearance, is made available in confidence solely for use in performance of work under contracts with the U.S. Department of Energy. This document is not to be published nor its contents otherwise disseminated or used for purposes other than specified above before patent approval for such release or use has been secured, upon request, from the Patent Counsel, U.S. Department of Energy Field Office, Richland, WA.

DISCLAIMER - This report was prepared as an account of work sponsored by an agency of the United States Government. Neither the United States Government nor any agency thereof, nor any of their employees, nor any of their contractors, subcontractors or their employees, makes any warranty, express or implied, or assumes any legal liability or responsibility for the accuracy, completeness, or any third party's use or the results of such use of any information, apparatus, product, or process disclosed, or represents that its use would not infringe privately owned rights. Reference herein to any specific commercial product, process, or service by trade name, trademark, manufacturer, or otherwise, does not necessarily constitute or imply its endorsement, recommendation, or favoring by the United States Government or any agency thereof or its contractors or subcontractors. The views and opinions of authors expressed herein do not necessarily state or reflect those of the United States Government or any agency thereof.

9. Impact Level 3EQ

10. RELEASE STAMP

OFFICIAL RELEASE BY WHC 5
DATE DEC 17 1992
Sta. 4

9413206.1275

ENGINEERING CHANGE NOTICE

1. ECN (use no. from pg. 1): 156097

15. Design Verification Required	16. Cost Impact		17. Schedule Impact (days)
	ENGINEERING	CONSTRUCTION	N/A
☐ Yes	Additional ☐ $ N/A	Additional ☐ $ N/A	Improvement ☐
☒ No	Savings ☐ $	Savings ☐ $	Delay ☐

18. Change Impact Review: Indicate the related documents (other than the engineering documents identified on Side 1) that will be affected by the change described in Block 12. Enter the affected document number in Block 19.

SDD/DD	☐	Seismic/Stress Analysis	☐	Tank Calibration Manual	☐
Functional Design Criteria	☐	Stress/Design Report	☐	Health Physics Procedure	☐
Operating Specification	☐	Interface Control Drawing	☐	Spares Multiple Unit Listing	☐
Criticality Specification	☐	Calibration Procedure	☐	Test Procedures/Specification	☐
Conceptual Design Report	☐	Installation Procedure	☐	Component Index	☐
Equipment Spec.	☐	Maintenance Procedure	☐	ASME Coded Item	☐
Const. Spec.	☐	Engineering Procedure	☐	Human Factor Consideration	☐
Procurement Spec.	☐	Operating Instruction	☐	Computer Software	☐
Vendor Information	☐	Operating Procedure	☐	Electric Circuit Schedule	☐
OM Manual	☐	Operational Safety Requirement	☐	ICRS Procedure	☐
FSAR/SAR	☐	IEFD Drawing	☐	Process Control Manual/Plan	☐
Safety Equipment List	☐	Cell Arrangement Drawing	☐	Process Flow Chart	☐
Radiation Work Permit	☐	Essential Material Specification	☐	Purchase Requisition	☐
Environmental Impact Statement	☐	Fac. Proc. Samp. Schedule	☐	N/A	☐
Environmental Report	☐	Inspection Plan	☐		☐
Environmental Permit	☐	Inventory Adjustment Request	☐		☐

9413206.1276

19. Other Affected Documents: (NOTE: Documents listed below will not be revised by this ECN.) Signatures below indicate that the signing organization has been notified of other affected documents listed below.

Document Number/Revision	Document Number/Revision	Document Number/Revision
N/A		

20. Approvals

OPERATIONS AND ENGINEERING	Signature	Date	ARCHITECT-ENGINEER	Signature	Date
Cog./Project Engineer	[illegible]	10/30/92	PE		
Cog./Project Engr. Mgr.	[illegible]	10/30/92	QA		
QA	J. C. Langford	11/18/92	Safety		
Safety	N/A		Design		
Security	N/A		Other		
Proj.Prog./Dept. Mgr.	[illegible]	11/18/92			
Def. React. Div.	N/A				
Chem. Proc. Div.	N/A				
Def. Wst. Mgmt. Div.	N/A		DEPARTMENT OF ENERGY		
Adv. React. Dev. Div.	N/A				
Proj. Dept.	N/A				
Environ. Div.	[illegible]	11/18/92	ADDITIONAL		
IRM Dept.	N/A				
Facility Rep. (Ops)	R. L. Marshall	11/17/92			
Other OSM	Michelle Hinden	11/17/92			
S&M	[illegible]	11/17/92			
Eng	[illegible]	11/17/92			

WHC-SD-WM-EV-075
Rev 1

TRADEMARK DISCLAIMER

Reference herein to any specific commercial product, process, or service by trade name, trademark, manufacturer, or otherwise, does not necessarily constitute or imply its endorsement, recommendation, or favoring by the United States Government or any agency thereof or its contractors or subcontractors.

This report has been reproduced from the best available copy.

Printed in the United States of America

DISCLM-4.CHP (1-91)

9413206.1277

RECORD OF REVISION	(1) Document Number WHC-SD-WM-EV-075	Page A

(2) Title
222-S Laboratory Complex Wastewater to 216-S-26 Crib Sampling and Analysis Plan

CHANGE CONTROL RECORD

(3) Revision	(4) Description of Change – Replace, Add, and Delete Pages	Authorized for Release (5) Cog./Proj. Engr.	(6) Cog./Proj. Mgr.	Date
	(7)			
0	WHC-SD-WM-EV-075 Rev. 0 EDT 155470 1/16/92			
1 PS	Revise per ECN 156097	[illegible]	[illegible]	10/30/92

9413206.1278

CONTENTS

A. SAMPLING OBJECTIVES 1
A.1 INTRODUCTION 1
A.2 OBJECTIVES 2
A.3 APPROACH 2

B. SITE BACKGROUND 4
B.1 222-S LABORATORY COMPLEX DESCRIPTION 4
B.2 STREAM DESCRIPTION 4
B.3 216-S-26 CRIB 7

C. RESPONSIBILITIES 9

D. SAMPLING LOCATIONS AND FREQUENCY 12
D.1 SAMPLING LOCATION 12
D.2 SAMPLING FREQUENCY 12

E. SAMPLE IDENTIFICATION 12
E.1 LIQUID EFFLUENT CHARACTERIZATION SAMPLE LABELING 12
E.2 ROUTINE SAMPLE LABELING 14

F. SAMPLING EQUIPMENT AND PROCEDURES 14
F.1 LIQUID EFFLUENT CHARACTERIZATION SAMPLES 14
F.2 ROUTINE SAMPLES 15

G. SAMPLE HANDLING AND ANALYSIS 15
G.1 LIQUID EFFLUENT CHARACTERIZATION SAMPLES 15
G.2 ROUTINE SAMPLES 18

H. REFERENCES 18

9413206.1279

LIST OF FIGURES

1 Location of the 222-S Laboratory Complex 5

2 222-S Laboratory and Associated Facilities 6

3 222-S Laboratory Coolant and Condensate Flow Diagram 8

4 222-S Laboratory Wastewater System 10

5 207-SL Retention Basin 13

9413206.1280

LIST OF TERMS

DOE	U.S. Department of Energy
DST	double-shell tank
FEMP	Facility Effluent Monitoring Plan
QA	Quality Assurance
QAPP	Quality Assurance Program Plan
SAP	Sampling and Analysis Plan
SST	single-shell tank
TOC	total organic carbon
WAC	*Washington Administrative Code*
WHC	Westinghouse Hanford Company

9413206.1281

This page intentionally left blank.

9413206.1282

222-S LABORATORY COMPLEX WASTEWATER TO 216-S-26 CRIB SAMPLING AND ANALYSIS PLAN

A. SAMPLING OBJECTIVES

A.1 INTRODUCTION

This Sampling and Analysis Plan (SAP) establishes the requirements and guidelines used by Westinghouse Hanford Company (WHC) in implementing an upgraded Liquid Effluent Sampling Program for the 222-S Laboratory wastewater stream effluent. The effluent contains liquids generated from steam condensate, laboratory sink drains, floor drains, service sinks, and equipment cooling water. The effluent does not contain liquids from sanitary sources.

9413206.1283

The requirements in this document are in addition to the Liquid Effluent Sampling Quality Assurance Program Plan (QAPP), WHC-SD-WM-QAPP-011 (WHC 1991a). The QAPP provides the Hanford Site guidelines and requirements for special high quality liquid effluent sampling activities, which include: overall scope and direction to the sampling activities, the control of samples, the laboratory analyses, the processing of data, the control of data, the quality assurance requirements, and corrective actions used in obtaining high quality data for the Liquid Effluent Sampling Program. The high quality data are obtained from controlled grab samples called liquid effluent characterization samples. These samples are used to characterize the distribution of analytes in the effluent and to determine which analytes will require additional monitoring using the existing routine monitoring program.

The SAP is a facility specific document for describing how the requirements of the QAPP shall be implemented for activities occurring at the facility. The SAP provides a general description and identifies procedures that will be used to execute the work needed to implement the QAPP requirements. In addition, the SAP describes how the liquid effluent characterization samples and data will be integrated within an existing liquid effluent monitoring program.

The existing liquid effluent monitoring program was implemented to meet the requirements of the U.S. Department of Energy (DOE) Order 5400.1 (DOE 1988). The DOE Order requires each facility develop a *Facility Effluent Monitoring Plan* (FEMP). The routine monitoring program complies with the requirements in the *Quality Assurance Program Plan for the Facility Effluent Monitoring Plan*, WHC-EP-0446 (WHC 1991b). The existing routine monitoring plans and procedures will not be altered unless the liquid effluent characterization sampling in this SAP has a significant discrepancy in analyte concentration data as compared to the data obtained from routine monitoring.

The QAPP was written to allow each facility some flexibility in accommodating the Hanford Site requirements. One primary reason for this flexibility is because of differences in procedures for surveying radiation sources at each facility. The SAP identifies facility specific exceptions to

the QAPP, which include changes to the required list of analytes. The QAPP requirements for chain of custody, laboratory analysis, validation of data, control of records, and corrective actions shall not be modified by this SAP.

A.2 OBJECTIVES

The following are primary objectives of the SAP.

- Obtain several sets of known quality data to develop a long-term sampling plan.
- Confirm the analyte concentration data reported in the stream specific reports and the conclusion that the stream does not contain dangerous waste, as defined in *Washington Administrative Code* (WAC) 173-303, "Dangerous Waste Regulations," as amended (Ecology 1990a).

The following are secondary objectives.

- Provide highly quality controlled data for the evaluation of routine process sampling methods so that existing data can be evaluated and used.
- Provide solid waste loading data to support development of wastewater treatment projects and groundwater remediation studies.
- Provide historical data for the WAC 173-240 (Ecology 1990c) engineering reports and WAC 173-216 (Ecology 1990b) waste discharge permit applications.

A.3 APPROACH

This SAP has been structured to obtain high quality sampling data that will identify the types of contaminants found in the liquid effluent streams from the 222-S Laboratory. The data will come from grab samples (liquid effluent characterization samples) that have quality controlled and verifiable methods for collecting the sample media, transportation of the sample media, analysis of the media, the statistical evaluation of the analytical results, and the storing of sample records. All liquid effluent characterization sampling work shall be performed according to approved written procedures. The procedures shall comply with the requirements of *Test Methods for Evaluating Solid Waste*, U.S. Environmental Protection Agency (EPA) SW-846, latest revision.

All personnel associated with collecting liquid effluent characterization samples, processing the samples, processing the data, and controlling records shall comply with the procedures related to their responsibilities. The personnel shall sign a document verifying that they have read and understood the procedures. The signed/dated documents shall become part of the training records.

9413206.1284

The liquid effluent characterization samples are grab samples because some constituents (volatile organics, ammonia) are unstable with time. Grab samples are used to minimize the holding time from sample collection to laboratory analyses to prevent a significant loss of these unstable analytes.

Liquid effluent characterization samples shall be obtained twice per year for the next two years following approval of this plan. In addition, liquid effluent characterization samples shall be obtained on the raw water supply system on a one time only basis. These samples are to be analyzed for chemical constituents selected from Appendix A of the QAPP that are of concern for designating dangerous waste characteristics and for preparation of discharge permits. Chemical analytes that are not found will be eliminated from the list of analytes in future liquid effluent characterization samples. Chemical analytes found in both the effluent and raw water at equivalent concentration levels will also be eliminated from the list of analytes. The amended list shall be a Class 3 Change in accordance with the *Hanford Federal Facility Agreement and Consent Order* (Tri-Party Agreement) (Ecology et al. 1990) as stated in the QAPP. Chemical analytes found to be added by plant operations with significant measurable quantities shall be included in the list of analytes for the existing routine monitoring sampling program. The document used for determining significance in amending the routine list of analytes is WAC 173-200, "Water Quality Standards for Ground Waters of the State of Washington" (Ecology 1990d).

9413206.1285

The liquid effluent characterization samples shall also be used to provide a quality control check on the procedures and methods used in the existing routine monitoring sampling program. During the sampling for liquid effluent characterization samples, extra sample bottles shall be obtained and sent to the onsite process control laboratory for analysis. The process control laboratory shall run an analysis using the same list of analytes and procedures as for routine samples. The routine sampling results will be compared with the liquid effluent characterization sampling results for common analytes. Recurring significant differences in data will be used as a basis for preparing a plan of corrective action to improve the existing routine sampling program.

The existing routine samples are taken using a flow proportional composite sampler to monitor all the liquid effluent discharged to the environment. These samples have a very limited list of analytes to reduce the hold time between collection and laboratory results, so that the data can be used for process control. The routine samples are collected, transported, and analyzed according to existing procedures at the Hanford Site. These existing procedures shall not be modified unless a plan of corrective action determines that the existing routine monitoring program needs to be improved.

The past routine samples provide an important pool of historical data. The number of samples provide soil column and process equipment solids loading information for future remediation studies, treatment process design, and permitting documentation. The SAP includes the existing routine sampling program for the accumulation of historical information and provides a baseline data pool for comparing the reliability and validity of past data.

B. SITE BACKGROUND

B.1 222-S LABORATORY COMPLEX DESCRIPTION

The 222-S Laboratory Complex is located in the southeast corner of the 200 West Area within the Hanford Site (Figure 1). The 222-S Laboratory Complex consists of the 222-S Laboratory, the 222-SA Standards Laboratory, and several ancillary facilities (Figure 2). The main facility of the complex consists of the 222-S Laboratory, which provides analytical support for several activities on the Hanford Site.

The main role for the 222-S Laboratory is to support efforts to characterize the waste stored in the 200 Area's single-shell tanks (SST). In addition, analytical services are provided for the following waste management processing plants:

- Tank Farms
- B Plant
- 242-A Evaporator Facility
- Plutonium-Uranium Extraction (PUREX) Plant
- Plutonium Finishing Plant (PFP)
- Uranium-Oxide (UO_3) Plant
- Waste Encapsulation Storage Facility (WESF)
- Environmental monitoring and surveillance programs
- Activities involving essential materials, research, and development.

At this time, the 222-S Laboratory facilities, equipment, and procedures are being upgraded to support *Resource Conservation and Recovery Act of 1976* (RCRA) analytical protocols and programs for environmental restoration and double-shell tank (DST) characterization.

Wastewater from the 222-S Laboratory is routed to the 207-SL Retention Basin, located directly east of the laboratory facility. Two 94,635 L (25,000-gal) belowgrade compartments comprise the 207-SL structure. Liquid effluent, potentially contaminated with radioactive and hazardous material, is held in the compartments to allow it to be sampled and analyzed. Effluent is not discharged to the 216-S-26 Crib until it is analytically determined to comply with release criteria established in WHC-CM-7-5, *Environmental Compliance Manual*. Batches of held effluent not in compliance with radioactive and mixed waste release criteria are pumped to the 219-S Waste Handling Facility for transfer to underground storage tanks. Batches of held effluent not in compliance with pH or total organic carbon (TOC) requirements are handled on a case-by-case basis, in accordance with applicable regulations.

B.2 STREAM DESCRIPTION

Discharges from the 222-S building empty into the 207-SL Retention Basin from the following sources: the sinks and drains in the glass-blowing shop; the distilled-water overflow and drain; the backflush and drain from the deionized-water unit and a floor drain near this unit; and flash-tank overflow and drain lines. Lines entering the flash tank carry cooling water from the

9413206.1286

Figure 1. Location of the 222-S Laboratory Complex.

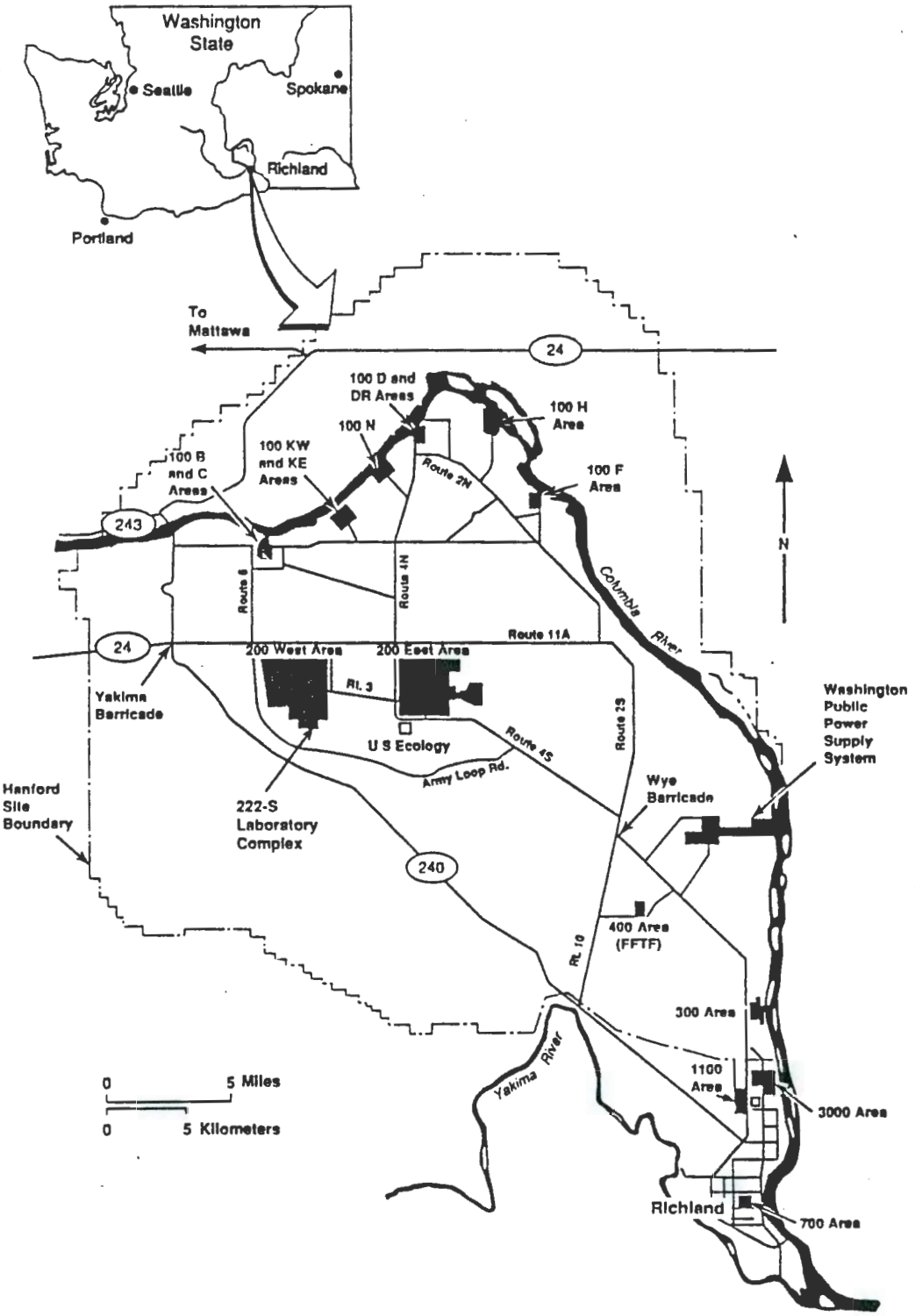

9413206.1287

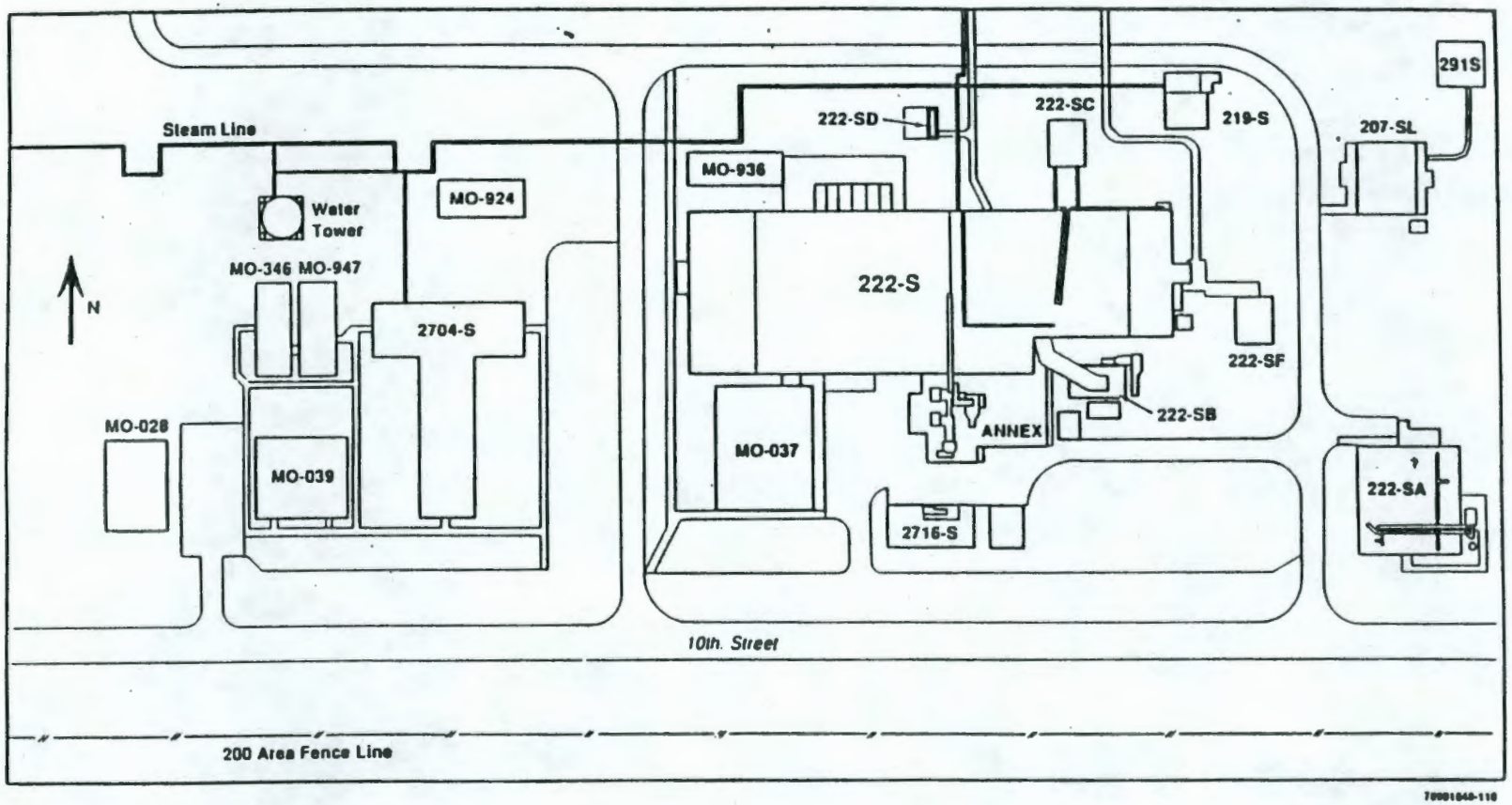

Figure 2. 222-S Laboratory and Associated Facilities.

supply fans, condensate from booster coils, and condensate from the reheat and preheat coils on supply fans. Figure 3 shows a flow diagram of major sources of wastewater generated within the 222-S Laboratory Complex.

The 219-S Waste Storage Facility discharges originate from the following sources: cooling water from tanks 101, 102, and 103 cooling water jackets; operating gallery sump no. 8; and steam condensate from the operating gallery. These discharges all empty into the 207-SL Retention Basin. This stream is nonradioactive and nonhazardous. The discharge from this source is estimated at 3,785 L/yr (1,000 gal/yr).

The 222-SA discharges nonhazardous effluents originating from laboratory sinks, fume hoods, the safety eye wash, the glass washer, and vacuum-pumps (cooling water) directly to the 216-S-26 Crib. The wastewater stream from 222-SA is considered nonradioactive and nonhazardous; consequently, it has not been routinely sampled and analyzed. Administrative controls are in place to help prevent discharge of dangerous wastes to this stream. Operating procedures for disposal of liquid wastes to laboratory sinks and drains specifically state that hazardous chemicals may not be disposed of to this stream.

9413206.1289

Currently, there is no feasible way to sample the 222-SA effluent stream. Because it was demonstrated that the potential exists for a *Comprehensive Environmental Response Compensation and Liability Act of 1980* (CERCLA) reportable spill of a hazardous material into the 222-SA wastewater stream it will be redirected to the 207-SL Retention Basin. When this is accomplished and the 222-SA stream empties into 207-SL, the stream will mix with effluent from the 222-S Laboratory. Approval to discharge this combined effluent to the 216-S-26 Crib will be contingent on whether samples of the effluent analyzed are in compliance with release criteria.

The only other regular sources of effluent discharged to the 216-S-26 Crib comes from the 291-S Stack Fan House cooling water and steam condensate from the emergency fan located there. These small-flow effluents, estimated to be a maximum of 52,996 L/yr (14,000 gal/yr) combined, are considered to have no credible potential for bearing radioactive or hazardous-material contamination. Recently a solenoid valve has been installed in the cooling-water supply line to reduce this flow. During warmer periods of the year, the valve is kept closed except when the fan is running. When cooler weather arrives, the valve is left partially open, allowing a small continuous flow to prevent the line from freezing. This modification clearly reduces the annual flow of the 291-S effluent, although the amount of the reduction has not been measured or estimated. Because of its minimal flow, and the fact that there is no credible potential for radioactive or hazardous material contamination of the condensate under routine or upset conditions, this stream will not be sampled.

B.3 216-S-26 CRIB

Dimensions of the crib are approximately 128 m x 3 m (420 ft x 10 ft). A 15 cm (6 in.) vitrified clay, perforated distribution pipe runs the length of the crib, 0.46 m (1.5 ft) above the bottom. Lining the bottom of the crib

Figure 3. 222-S Laboratory Coolant and Condensate Flow Diagram.

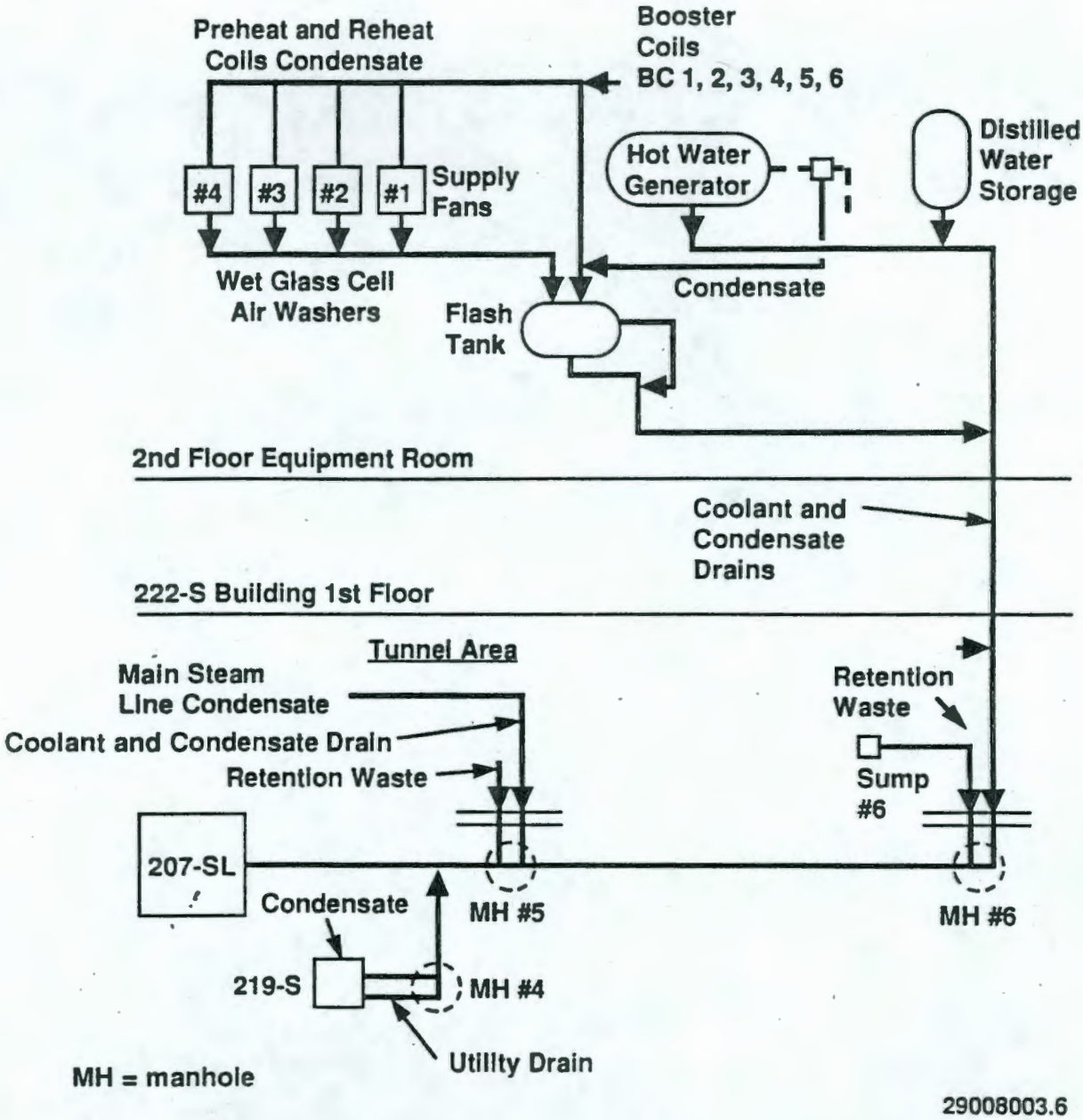

9413206.1290

is 0.76 m (2.5 ft) of gravel covered with a membrane barrier and 2.9 m (9.5 ft) of earth. One gage well with a liquid level indicator is located 30.5 m (100 ft) from the west end of the crib, and a vent riser is located at the east end of the crib. It is designed to accommodate up to 283,905 L/d (75,000 gal/d), or 94,635 L/8-h (25,000 gal/8-h) shift. Flows to the crib average about 3,785 L/d (1,000 gal/d) from 222-SA and 26,498 to 56,781 L/d (7,000 to 15,000 gal/d) from 222-S by way of the 207-SL Retention Basin. Figure 4 shows the location of the 216-S-26 crib.

C. RESPONSIBILITIES

The responsibility descriptions below are related to activities occurring at the 222-S Laboratory. Overall responsibilities covering other areas are the same as found in the QAPP.

9413206.1291

222-S Engineering Services

- Prepare the SAP.
- Ensure procedures are updated to support the sampling activities.
- Provide the sampling task leader.
- Initiate scheduling of personnel required for sampling.
- Provide technical support for sampling activities.
- Review data logs and sampling activities.
- Surveil chain-of-custody activities.
- Review liquid effluent characterization sampling data for completeness and consistency.
- Ensure liquid effluent characterization sampling data and flow information are transferred to the Effluent Treatment Programs (ETP) for filing with Environmental Data Management Center (EDMC).
- File routine sample data at the plant and the EDMC.

The data in files shall include copies of field notes, sampling logs, process flow records, analytical results, and validation calculations.

222-S Building Operations

- Provide a trained operator for escort during liquid effluent characterization sampling.
- Provide sampling and transportation of routine samples.
- Complete sample log sheets for routine samples.

Figure 4. 222-S Laboratory Wastewater System.

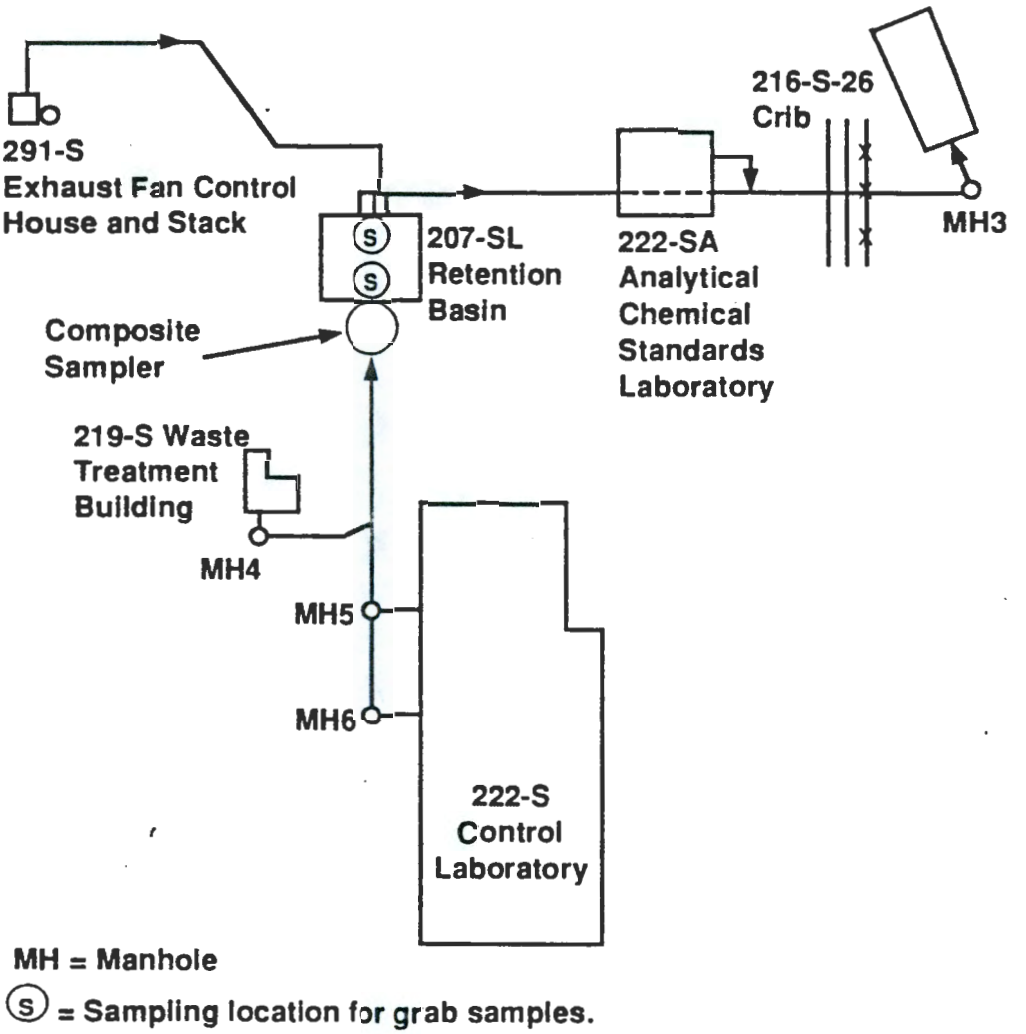

9413206.1292

9413206.1293

222-S Health Physics

- Provide a Health Physics Technician (HPT) for radiation surveying of liquid effluent characterization sample packages.
- Provide the Radiation Work Permit (RWP) instructions for zone entry.
- Verify radiation worker training requirements of sampling personnel.

Office of Sample Management

- Identify and approve the contract lab to perform analysis for this SAP.
- Monitor the contract lab for quality performance.
- Act as an interface between the facility sample task leader and the lab.
- Verify that all laboratory results are received to ensure they are complete.
- Validate contract laboratory data packages.

Sampling and Mobile Laboratories

- Provide trained samplers for liquid effluent characterization sampling activities. One sampler shall have a WHC Certificate of Qualification from the Sampling and Mobile Laboratories organization. The certificated sampler shall direct liquid effluent characterization sampling, packaging, and shipping.
- Prepare the plant liquid effluent characterization sampling procedure.
- Document sampling activities in a log book.
- Initiate "chain-of-custody" documentation for liquid effluent characterization samples.
- Package liquid effluent characterization samples for shipping.
- Transport liquid effluent characterization samples to laboratory or shipping center.
- Ensure copies of field logs and other sampling data sheets are filed with the sample task leader.

Facility Quality Assurance

- Provide surveillance of the liquid effluent characterization sampling program.
- Audit records and procedures.

D. SAMPLING LOCATIONS AND FREQUENCY

D.1 SAMPLING LOCATION

Routine samples are taken using a flow-proportional sampler located on the west end of the 207-SL retention basins. If the sampler unit is not operational, a grab sample will be taken from a set of hatches on the west or east end of the basins.

At the writing of this plan, protocol sampling of accumulated wastewater in the 207-SL Retention Basin will be done through two sets of hatches in the covering of this facility, as shown in Figure 5. These hatches allow direct access to both compartments of the retention basin. Two of the hatches are located on the west end of the basin and the other two are located on the east end of the basin. When the basin is considered full and ready for discharge to the crib, sampling will be done at the west end of the basin. A weighted bottle-type sampler is recommended. No preventive maintenance will be required for the protocol sampling.

9413206.1294

D.2 SAMPLING FREQUENCY

The frequency of routine sampling will be contingent on the operational need for releasing batch discharges of wastewater from the 207-SL Retention Basin to the 216-S-26 Crib.

After approval of this plan, liquid effluent characterization samples will be obtained at least twice during the following 12 months.

E. SAMPLE IDENTIFICATION

E.1 LIQUID EFFLUENT CHARACTERIZATION SAMPLE LABELING

Sample labels for liquid effluent characterization samples shall be furnished by the sampling team from the Sampling and Mobile Laboratories. The labels will require the following information to be recorded by a member from the sampling team: identification of the person in charge of collecting the sample; unique sample identification number; date and time the sample was collected; the place the sample was collected; the stream identification; preservative added; and the analysis to be performed on the sample. The unique sample number shall be obtained from the Hanford Environmental Information System (HEIS). In addition, each bottle shall be identified with a bar code sticker attached to the bottle by the bottle manufacturer. The bar code shall identify the bottle lot number and individual bottle number.

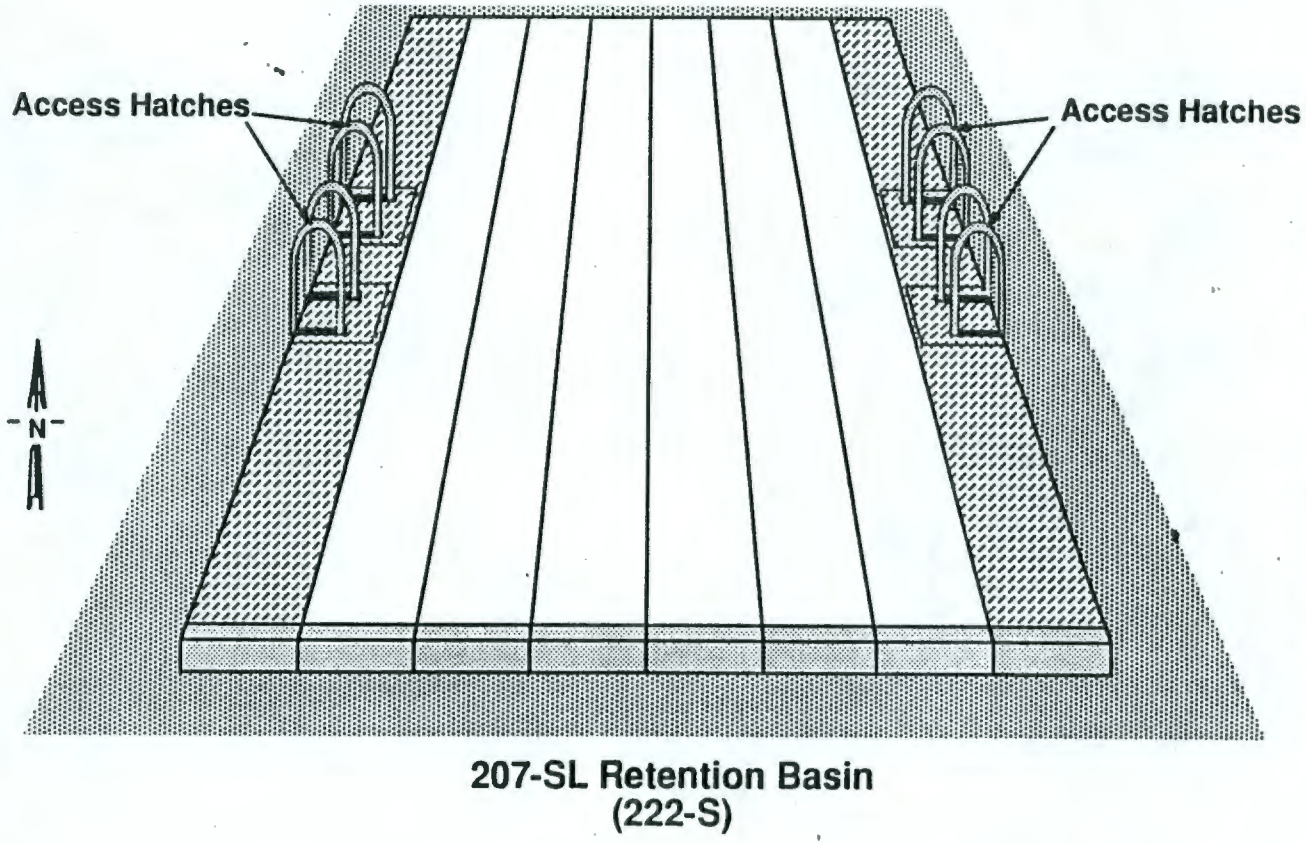

Figure 5. 207-SL Retention Basin.

E.2 ROUTINE SAMPLE LABELING

Currently, grab samples collected from 207-SL are identified and described by this information on sample bottle labels:

- Sample number as follows:
  - S - (four-digit serial number)
  - S = 222-S Plant Designation
  - Serial number = computer generated sequential number
- Date of sample collection
- 207-SL (or 207-SL composite, after composite sampler operational)
- Time of sample collection
- Destination of release: 216-S-26 Crib
- Radiological release sticker.

A system equivalent to the labeling performed for characterization sample labeling may be used in the future for routine sampling.

9413206.1296

F. SAMPLING EQUIPMENT AND PROCEDURES

F.1 LIQUID EFFLUENT CHARACTERIZATION SAMPLES

The liquid effluent characterization sampling will comply with a specific procedure prepared for the sampling of the liquid effluent streams from the 222-S Laboratory. This procedure will be based on recommended practices found in EPA SW-846, Chapter Nine, latest edition. This procedure will identify specific sampling requirements, which include the following: sample locations, description of the sampling equipment, containers, and reagents, safety precautions, including personnel protective equipment, and specific steps for collecting the sample. Sampling will be surveilled at random by a cognizant Quality Assurance (QA) person.

Sample bottles shall be new, commercially available, certified, precleaned containers. The certificate of precleaned condition shall accompany the containers.

Preservative required for liquid effluent characterization samples will be vendor supplied and added to the containers in a laboratory environment prior to being taken to the field. The caps will be sealed to the containers with tamper evident tape.

The samples shall be cleaned and surveyed for surface radioactivity. The released sample containers shall then be double bagged. The samples will be packaged in accordance with EII 5.11 "Sample Packaging and Shipping." The cooler shall become part of the sample packaging.

Field logs will be completed per the *Environmental Investigations and Site Characterization Manual*, WHC-CM-7-7, procedure EII 1.5 "Field Logbooks" at the time of sampling by the sampling team (WHC 1989). A field logbook shall be maintained which contains information pertinent to the sampling and the information shall be quality record documents.

Sample data that has been validated will be transferred to Work Control and Data Management for inclusion in the EDMC files and to be prepared for public release.

F.2 ROUTINE SAMPLES

A flow-proportional sampler is currently in use which uses a vacuum sampling line. A 150 ml sample is taken for every 568 L (150 gal) of effluent. The samples will be maintained in a refrigerated compartment at 4 ± 2 °C. The frequency of routine sampling will be contingent on the operational need for releasing batch discharges of wastewater from the 207-SL Retention Basin to the 216-S-26 Crib. The composite sampling system will be maintained by the plant instrument surveillance, calibration, and evaluation system. This system provides for preventative maintenance of the equipment.

9413206.1297

G. SAMPLE HANDLING AND ANALYSIS

G.1 LIQUID EFFLUENT CHARACTERIZATION SAMPLES

Liquid effluent characterization samples will be analyzed for the following:

- Inductively coupled plasma (ICP) metals, EPA method 6010
- Antimony, EPA method 7041
- Arsenic, EPA method 7060
- Hexavalent chromium, EPA method 7196
- Lead, EPA method 7421
- Mercury, EPA method 7470
- Selenium, EPA method 7740
- Thallium, EPA method 7841
- Tin, EPA method 7870
- Organochlorine pesticides and polychlorinated biphenyls (PCBs), EPA method 8080
- Organophosphorus pesticides, EPA method 8140
- Chlorinated herbicides, EPA method 8150
- Volatile organic analysis (VOA), EPA method 8240

- Semivolatile organics, EPA method 8270
- Sulfides, EPA method 9030
- TOC, EPA method 9060
- Total oil and grease, EPA method 9070
- Chemical oxygen demand, EPA method 410.1
- Sulfate, EPA method 300.0
- Nitrogen, nitrate, nitrite, EPA method 300.0
- Fluoride, EPA method 300.0
- Total cyanide, EPA method 335.2
- Chloride, EPA method 300.0
- Alkalinity, EPA method 310.1
- Total dissolved solids, EPA method 160.1
- pH, EPA method 150.1
- Specific conductance, EPA method 120.1
- Total alpha/beta, no standard method
- Gamma scan determination
- Total uranium
- Plutonium-241
- Americium-241
- Strontium 89/90
- All EPA methods are found in the latest version of EPA SW-846.

The handling and preparation of samples will comply with the procedures found in the *Environmental Investigations and Site Characterization Manual*, WHC-CM-7-7 (WHC 1989). A chain-of-custody form will be initiated at the time of sampling and will accompany each liquid effluent characterization sample. A sample may consist of several containers. The chain-of-custody will account for each container. The preparation of either a single or a group of samples for shipment to a laboratory shall comply with the procedure EII 5.11 "Sample Packaging and Shipping."

Once a liquid effluent characterization sample has been drawn it must be in the physical control or view of the custodian, locked in an area where it

9413206.1298

can not be tampered with, or prepared for shipping with tamper-proof tape applied. Physical control includes being in the sight of the custodian, being in a room which will signal an alarm when entered, or locked in a cabinet. When more than one person is involved in sampling, one person shall be designated and only that person signs as sampler. This person is the custodian until the samples are transferred to another location or group and shall sign when releasing the samples to the designated receiver.

The approved laboratory shall designate a sample custodian and a designated alternate responsible for receiving all samples. The sample custodian or his alternate shall sign and date all appropriate receiving documents at the time of receipt and at the same time initiate an internal chain-of-custody form using documented procedures. A continuous chain-of-custody will be maintained from the time of sampling until final disposition of all samples.

9413206.1299

Analytical procedures for liquid effluent characterization samples shall meet the QA guidelines of EPA SW-846, Chapter One, latest edition. The statement of work for completing the analysis shall require the approved laboratories to have existing standard operating procedures and to submit any changes in their procedures during the contract term for approval. The approved laboratory procedures shall describe data reduction, verification, and reporting.

Liquid effluent characterization samples will be collected in commercially available, individually certified, precleaned glass or plastic bottles. The certification of the precleaned condition shall accompany the bottle.

Recommended container types, volumes, and preservatives for the above tests will be as noted in the QAPP. The sample volumes and number of containers are prescribed by the analytical laboratory performing the analysis and are subject to change.

The samples shall not be analyzed for total and fecal coliforms because there are no sanitary sewer connections. The samples shall not be analyzed for five day biological oxygen demand because there is no sanitary waste water and because the process does not use organic chemicals.

The samples will be routed to an approved participant contractor or subcontractor laboratory for analysis. The data will be considered representative so long as at least 90 percent of the data points meet the established requirements in the laboratory contract for precision and accuracy. Data which does not meet this objective will be reviewed to determine whether the data can be used or whether corrective action should be taken. If necessary, corrective action will consist of repeating the sampling and analysis activity.

Data and record information that has been validated will be transferred to Work Control and Data Management for inclusion in the EDMC files and to an approved computer data file (LEMIS) when it becomes available.

G.2 ROUTINE SAMPLES

Routine samples of effluent from the 207-SL Retention Basin are analyzed at the 222-S Laboratory. This wastewater source is known to be nonradioactive and nonhazardous under normal conditions. As soon as the samples are collected, they are delivered to 222-S to await analysis, in accordance with approved sample receiving procedures. The standard requested analytes and corresponding facility-specific procedures are as follows:

- Gross alpha activity, LA-508-113
- Gross beta activity, LA-508-113
- pH, LA-212-102
- TOC, LA-344-105
  (no release criterion exists yet for TOC)
- Nitrate, LA-533-101
  (no release criterion exists yet for nitrate)
- Strontium-90, LA-220-104
- ^{137}Cs, LA-548-121
- U total, LA-925-107
- $^{239/240}Pu$, LA-943-123
- ^{241}Am, LA-943-123.

Nonroutine events affecting the composition of the effluent discharging to the 216-S-26 Crib may lead to the need to analyze for constituents not listed. These situations shall be handled on a case-by-case basis. All analyses performed at the 222-S Laboratory shall be in accordance with approved procedures and conform to applicable QA requirements established in WHC-SD-CP-QAPP-011 (WHC 1991a), current revision. Data sheets produced in conjunction with analyses are quality-controlled documents. Analytical results shall be forwarded to Environmental Protection and 222-S Engineering Services. Any nonconformance items will be documented as described in section QI 15.1, WHC-CM-4-2 *Quality Assurance Manual* (WHC 1988).

H. REFERENCES

Comprehensive Environmental Response, Compensation and Liability Act of 1980, as amended, 42 USC 9601 et seq.

DOE, 1988, *General Environmental Protection Program*, DOE Order 5400.1, U.S. Department of Energy, Washington, D.C.

9413206.1300

Ecology, EPA, and DOE, 1990, *Hanford Federal Facility Agreement and Consent Order*, 2 vols., as amended, Washington State Department of Ecology, U.S. Environmental Protection Agency, and U.S. Department of Energy, Olympia, Washington.

Ecology, 1990a, "Dangerous Waste Regulations," *Washington Administrative Code*, Chapter 173-303, as amended, Washington State Department of Ecology, Olympia, Washington.

Ecology, 1990b, "State Waste Discharge Permit Program," *Washington Administrative Code*, Chapter 173-216, as amended, Washington State Department of Ecology, Olympia, Washington.

Ecology, 1990c, "Submission of Plan and Reports for Construction of Wastewater Facilities," *Washington Administrative Code* 173-240, as amended, Washington State Department of Ecology, Olympia, Washington.

Ecology, 1990d, "Water Quality Standards of the State of Washington," *Washington Administrative Code*, Chapter 173-200, Washington State Department of Ecology, Olympia, Washington.

EPA, latest edition, *Test Methods for Evaluating Solid Wastes*, SW-846, U.S. Environmental Protection Agency/Office of Solid Waste and Emergency Response, Washington, D.C.

Resource Conservation and Recovery Act of 1976, as amended, 42 USC 6901 et seq.

WHC, 1988, *Quality Assurance Manual*, WHC-CM-4-2, Westinghouse Hanford Company, Richland, Washington.

WHC, 1989, *Environmental Investigations and Site Characterizations Manual*, WHC-CM-7-7, Westinghouse Hanford Company, Richland, Washington.

WHC, 1991a, *Liquid Effluent Sampling Quality Assurance Program Plan*, WHC-SD-WM-QAPP-011, Rev. 2A, Westinghouse Hanford Company, Richland, Washington.

WHC, 1991b, *Quality Assurance Project Plan for Facility Effluent Monitoring Plan Activities*, WHC-EP-0446, Westinghouse Hanford Company, Richland, Washington.

9413206.1301

This page intentionally left blank.

9413206.1302

Date Received: 11/19/92	INFORMATION RELEASE REQUEST	Reference: WHC-CM-3-4

Complete for all Types of Release

Purpose

[] Speech or Presentation
- [] Full Paper
- [] Summary
- [] Abstract
- [] Visual Aid

(Check only one suffix)

[] Speakers Bureau
[] Poster Session
[] Videotape

[] Reference
[X] Technical Report
[] Thesis or Dissertation
[] Manual
[] Brochure/Flier
[] Software/Database
[] Controlled Document
[] Other

ID Number (include revision, volume, etc.)
WHC-SD-WM-EV-075 Rev 1

List attachments.

Date Release Required
11/20/92

Title 222-S LABORATORY WASTE WATER TO 216-S-26 CRIB SAMPLING AND ANALYSIS PLAN

Unclassified Category UC-

Impact Level 3E Q

New or novel (patentable) subject matter? [X] No [] Yes
If "Yes", has disclosure been submitted by WHC or other company?
[] No [] Yes Disclosure No(s).

Information received from others in confidence, such as proprietary data, trade secrets, and/or inventions?
[X] No [] Yes (Identify)

Copyrights? [X] No [] Yes
If "Yes", has written permission been granted?
[] No [] Yes (Attach Permission)

Trademarks?
[X] No [] Yes (Identify)

Complete for Speech or Presentation

Title of Conference or Meeting

Group or Society Sponsoring

Date(s) of Conference or Meeting

City/State

Will proceedings be published? [] Yes [] No
Will material be handed out? [] Yes [] No

Title of Journal

9413206.1303

CHECKLIST FOR SIGNATORIES

Review Required per WHC-CM-3-4	Yes	No	Reviewer - Signature Indicates Approval: Name (printed)	Signature	Date
Classification/Unclassified Controlled Nuclear Information	[]	[X]			
Patent - General Counsel	[X]	[]	S. W. Berglin	S W Berglin	11/10/92
Legal - General Counsel	[x]	[]	S. W. Berglin		
Applied Technology/Export Controlled Information or International Program	[]	[x]			
WHC Program/Project	[x]	[]	D. R. Speer	Dwayne R Speer	11-19-92
Communications	[]	[x]			
RL Program/Project	[x]	[]	~~J. M. Hennig~~ L.S. Mamiya	L.S. Mamiya	11/19/92
Publication Services	[x]	[]	~~J. D. Hudspeth~~ M.K. Oldfield	M K Oldfield	11-19-92
Other Program/Project	[X]	[x]	P. K. Clark	Paula K Clark	11-19-92

Information conforms to all applicable requirements. The above information is certified to be correct.

	Yes	No
References Available to Intended Audience	[x]	[]
Transmit to DOE-HQ/Office of Scientific and Technical Information	[]	[x]

Author/Requestor (Printed/Signature) Date
G. J. Warwick [signature] 11/12/92

Intended Audience
[] Internal [] Sponsor [X] External

Responsible Manager (Printed/Signature) Date
X S. L. Brey [signature] 11/12/92

INFORMATION RELEASE ADMINISTRATION APPROVAL STAMP

Stamp is required before release. Release is contingent upon resolution of mandatory comments.

APPROVED FOR RELEASE
OFFICIAL DOCUMENT
V.B.
Date 11/23/92

Date Cancelled

Date Disapproved