0093564

Department of Energy
Richland Operations Office
P.O. Box 550
Richland, Washington 99352

11-AMRC-0063

JAN 07 2011

Ms. J. A. Hedges
Nuclear Waste Program
State of Washington
Department of Ecology
3100 Port of Benton Blvd.
Richland, Washington 99354

Dear Ms. Hedges:

TRANSMITTAL OF APPROVED WASTE SITE RECLASSIFICATION FORM AND SUPPORTING DOCUMENTATION FOR THE 116-H-9, 117-H SEAL PIT CRIB, REVISION 2

Attached for your use are the approved Waste Site Reclassification Form No. 2009-047, and supporting documentation for the 116-H-9, 117-H Seal Pit Crib, Revision 2. If you have questions, please contact me or your staff may contact Joanne Chance, of my staff at (509) 376-0811.

Sincerely,

Mark S. French, Federal Project Director
for the River Corridor Closure Project

AMRC:JCC

Attachment

cc w/attach:
N. M. Menard, Ecology
Administrative Record, H6-08

cc w/o attach:
R. A. Carlson, WCH
M. L. Proctor, WCH

RECEIVED
JAN 13 2011
EDMC

100.HR.1

Date Submitted: 12/08/09 Originator: M. L. Proctor Phone: 372-9227	**WASTE SITE RECLASSIFICATION FORM** Operable Unit(s): 100-HR-1 Waste Site Code: 116-H-9 Type of Reclassification Action: Closed Out ☐ Interim Closed Out ☒ No Action ☐ RCRA Postclosure ☐ Rejected ☐ Consolidated ☐	Control Number: 2009-047

This form documents agreement among parties listed authorizing classification of the subject unit as Closed Out, Interim Closed Out, No Action, RCRA Postclosure, Rejected, or Consolidated. This form also authorizes backfill of the waste management unit, if appropriate, for Closed Out and Interim Closed Out units. Final removal from the NPL of No Action and Closed Out waste management units will occur at a future date.

Description of current waste site condition:

The 116-H-9 Seal Pit Crib was an inactive gravel-filled crib that received drainage from the 117-H Filter Building. The waste site was located approximately 150 m southwest of the 105-H Building. The site has been remediated and presently exists as an open excavation. Remediation, verification sampling, and comparison of residual contaminant concentrations against cleanup levels have been performed in accordance with remedial action objectives and goals established by the *Interim Action Record of Decision for the 100-BC-1, 100-BC-2, 100-DR-1, 100-DR-2, 100-FR-1, 100-FR-2, 100-HR-1, 100-HR-2, 100-KR-1, 100-KR-2, 100-IU-2, 100-IU-6, and 200-CW-3 Operable Units, Hanford Site, Benton County, Washington* (Remaining Sites ROD), U.S. Environmental Protection Agency, Region 10, Seattle, Washington. The selected action involved: (1) evaluating the site using available process information, (2) remediating the site, (3) demonstrating through verification sampling that cleanup goals have been achieved, and (4) proposing the site for reclassification to Interim Closed Out.

Basis for reclassification:

Evaluation of verification sampling data for the 116-H-9 waste site demonstrates that this site meets the remedial action objectives specified in the Remaining Sites ROD. This site will support future unrestricted land uses that can be represented (or bounded) by a rural-residential scenario. Sampling results also showed that this site will support unrestricted future use of shallow zone soil (i.e., surface to 4.6 m [15 ft]) and is protective of groundwater and the Columbia River. Site contamination did not extend into the deep zone; therefore, institutional controls to prevent uncontrolled drilling or excavation into the deep zone are not required. In accordance with this evaluation, the verification sampling results support a reclassification of this site to Interim Closed Out. The basis for reclassification is described in detail in the *Remaining Sites Verification Package for the 116-H-9, 117-H Seal Pit Crib* (attached).

Regulator Comments:
Approval of this WSRF documents regulator agreement that the 116-H-9 waste site qualifies for "Interim Closed Out" under this Interim Action ROD. In addition, Ecology has evaluated the data for this site against WAC 173-340 (2007) clean-up levels for direct contact, groundwater protection, and river protection. This evaluation is documented in the letter transmitting Ecology's approval of the site's interim reclassification to "Interim Closed Out."

Waste Site Controls:
Engineered Controls: Yes ☐ No ☒ Institutional Controls: Yes ☐ No ☒ O&M requirements: Yes ☐ No ☒
If any of the Waste Site Controls are checked Yes specify control requirements including reference to the Record of Decision, TSD Closure Letter, or other relevant documents.

M. S. French DOE Federal Project Director (printed)	M S French Signature	10/18/10 Date
N. Menard Ecology Project Manager (printed)	Nina M. Menard Signature	12/22/10 Date
EPA Project Manager (printed)	Signature	Date

REMAINING SITES VERIFICATION PACKAGE FOR THE 116-H-9, 117-H SEAL PIT CRIB

Attachment to Waste Site Reclassification Form 2009-047

December 2010

REMAINING SITES VERIFICATION PACKAGE FOR THE 116-H-9, 117-H SEAL PIT CRIB

EXECUTIVE SUMMARY

The 116-H-9, 117-H Seal Pit Crib waste site is located within the 100-HR-1 Operable Unit on the Hanford Site in southeastern Washington State. The Waste Information Data System describes the 116-H-9 waste site as a gravel-filled crib that received drainage from the 117-H Filter Building. The waste site is located approximately 150 m (492 ft) southwest of the 105-H Reactor Building. The crib bottom dimensions were 6 m (20 ft) long, 6 m (20 ft) wide, and between 4 m (13 ft) and 4.6 m (15 ft) deep. A black polyurethane vapor barrier covered the gravel, and a 36-in. vertical steel vent pipe was present from the base of the crib to 1.2 m (4 ft) above grade.

Remedial action at the 116-H-9, 117-H Seal Pit Crib began on October 28, 2008, and continued through February 3, 2009, to a depth of approximately 4.6 m (15 ft). Verification sampling for the 116-H-9 waste site was performed in July 2009, to collect data to determine if the site met remedial action goals. The contaminants of potential concern for verification sampling included carbon-14, cesium-137, cobalt-60, europium-152, europium-154, europium-155, radium-226, thorium-228, thorium-232, tritium, plutonium-238, plutonium-239/240, strontium-90, uranium-238, silver, cadmium, chromium (total), hexavalent chromium, mercury, lead, selenium, and polychlorinated biphenyls (PCBs) (WCH 2009b).

Results of verification sample analysis show that the waste removal action achieved compliance with the remedial action objectives for the 116-H-9 site. A summary of the verification sampling analytical results evaluated against the applicable criteria is presented in Table ES-1. The results of the verification sampling are used to make reclassification decisions for the 116-H-9 waste site in accordance with the TPA-MP-14 procedure in the *Tri-Party Agreement Handbook Management Procedures* (DOE-RL 2007).

Table ES-1. Summary of Remedial Action Goals for 116-H-9 Seal Pit Crib. (2 Pages)

Regulatory Requirement	Remedial Action Goals	Results	Remedial Action Objectives Attained?
Direct Exposure – Radionuclides	Attain 15 mrem/yr dose rate above background over 1,000 years.	Activity of the only radionuclide above background (Pu-238) is below the activity equivalent to a 15 mrem/yr dose rate. Thorium-228 does not have a background value listed in DOE/RL-96-17, Rev. 6 based on natural occurrences at the Hanford Site.	Yes
Direct Exposure – Nonradionuclides	Attain individual COPC RAGs.	All individual COPC concentrations are below the direct exposure criteria.	Yes

Table ES-1. Summary of Remedial Action Goals for 116-H-9 Seal Pit Crib. (2 Pages)

Regulatory Requirement	Remedial Action Goals	Results	Remedial Action Objectives Attained?
Direct Contact Risk Requirements – Nonradionuclides	Attain a hazard quotient of <1 for all individual noncarcinogens.	All individual hazard quotients are <1.	Yes
	Attain a cumulative hazard quotient of <1 for noncarcinogens.	The cumulative hazard quotient (1.7×10^{-2}) is <1.	
Risk Requirements – Nonradionuclides	Attain an excess cancer risk of $<1 \times 10^{-6}$ for individual carcinogens.	The excess cancer risk for individual carcinogens is $<1 \times 10^{-6}$.	Yes
	Attain a cumulative excess cancer risk of $<1 \times 10^{-5}$ for carcinogens.	The total excess cancer risk (2.7×10^{-7}) is $<1 \times 10^{-5}$.	
Groundwater/River Protection – Radionuclides	Attain single-COPC groundwater and river protection RAGs.	Plutonium-238 and thorium-228 have a distribution coefficient of 200 mL/g, RESRAD modeling discussed in Appendix C of Rev. 6 of the RDR/RAWP (DOE-RL 2009) predicts these constituents will not impact groundwater or the Columbia River within 1,000 years.[b] Cleanup levels are not exceeded.	Yes
	Attain national primary drinking water standards:[a] 4 mrem/yr (beta/gamma) dose rate to target receptor/organs.		
	Meet drinking water standards for alpha emitters: the most stringent of 15 pCi/L MCL or 1/25th of the derived concentration guides from DOE Order 5400.5.[c]		
	Meet total uranium standard of 30 µg/L (21.2 pCi/L).	U-233/234 and U-238 were both detected but below background.	
Groundwater/River Protection – Nonradionuclides	Attain individual nonradionuclide groundwater and river cleanup requirements.	Residual concentrations of aroclor-1254 exceeded the soil RAGs for the protection of groundwater and the Columbia River. However, RESRAD modeling (BHI 2005) predicts this constituent will not reach groundwater (and, therefore, the Columbia River) within 1,000 years.[b]	

[a] "National Primary Drinking Water Regulations" (40 *Code of Federal Regulations* 141).

[b] Based on the *100 Area Analogous Sites RESRAD Calculations* (BHI 2005), residual concentrations of aroclor-1254 with a K_d of 75.6 mL/g are not predicted to migrate more than 1 m (3.3 ft) vertically in 1,000 years. The vadose zone underlying the soil below the lowest sample location is approximately 14 m (46 ft) thick. Therefore, residual concentrations of aroclor-1254 are predicted to be protective of groundwater and the Columbia River.

[c] *Radiation Protection of the Public and the Environment* (DOE Order 5400.5).

COPC = contaminant of potential concern
K_d = distribution coefficient
MCL = maximum contaminant level (drinking water standard)
RDR/RAWP = *Remedial Design Report/Remedial Action Work Plan for the 100 Area*
RAG = remedial action goal
RESRAD = RESidual RADioactivity (dose model)

Because concentrations of antimony, manganese, and vanadium exceed EPA or Ecology eco-risk screening levels but are below background levels (DOE-RL 2009a, Ecology 1994), it is believed that the presence of these constituents does not pose a risk to ecological receptors. No established background value is available for boron; a final cleanup level for boron, including consideration of background, will be established through the remedial investigation/feasibility study process. Exceedances for boron will be evaluated in the context of additional lines of evidence for risk to ecological receptors as part of the final closeout decision for this site.

REMAINING SITES VERIFICATION PACKAGE FOR THE 116-H-9, 117-H SEAL PIT CRIB

STATEMENT OF PROTECTIVENESS

This report demonstrates that the 116-H-9, 117-H Seal Pit Crib waste site meets the remedial action objectives (RAOs) and remedial action goals (RAGs) as established in the *Remedial Design Report/Remedial Action Work Plan for the 100 Area* (RDR/RAWP) (DOE-RL 2009b) and the *Interim Action Record of Decision for the 100-BC-1, 100-BC-2, 100-DR-1, 100-DR-2, 100-FR-1, 100-FR-2, 100-HR-1, 100-HR-2, 100-KR-1, 100-KR-2, 100-IU-2, 100-IU-6, and 200-CW-3 Operable Units, Hanford Site, Benton County, Washington* (Remaining Sites ROD) (EPA 1999). The results of the verification sampling show that residual contaminant concentrations do not preclude any future uses (as bounded by the rural-residential scenario) and allow for unrestricted use of shallow zone soils (i.e., surface to 4.6-m [15-ft] deep). The results also demonstrate that residual contaminant concentrations are protective of groundwater and the Columbia River. The site does not have a deep zone or residual contaminant concentrations that would require any institutional controls.

Because concentrations of antimony, manganese, and vanadium exceed EPA or Ecology eco-risk screening levels but are below background levels (DOE-RL 2009a, Ecology 1994), it is believed that the presence of these constituents does not pose a risk to ecological receptors. No established background value is available for boron; a final cleanup level for boron, including consideration of background, will be established through the remedial investigation/feasibility study process. Exceedances for boron will be evaluated in the context of additional lines of evidence for risk to ecological receptors as part of the final closeout decision for this site.

GENERAL SITE INFORMATION AND BACKGROUND

The 116-H-9 waste site is located within the 100-HR-1 Operable Unit on the Hanford Site in southeastern Washington State. The Waste Information Data System and the Stewardship Information System summary reports (WCH 2009b) described the 116-H-9 site as a gravel-filled crib located approximately 150 m (492 ft) southwest of the 105-H Building. The crib bottom dimensions are 6 m (20 ft) long, 6 m (20 ft) wide, and between 4 m (13 ft) and 4.6 m (15 ft) deep. A black polyurethane vapor barrier was placed over the gravel, and a 36-in. vertical steel vent pipe was present from the base of the crib to 1.2 m (4 ft) above grade. Construction details of the crib are shown in Figure 1.

During its period of operation from 1960 to 1965, the 116-H-9 Crib is reported to have received approximately 300,000 L (79,200 gal) of low-level radioactive effluent that drained from the 117-H Filter Building confinement system seal pits. The crib was released from radiological controls in the late 1960s because of short-lives associated with the radioisotopes of concern (Deford and Einan 1995).

Figure 1. 116-H-9 Seal Pit Crib Construction Details.

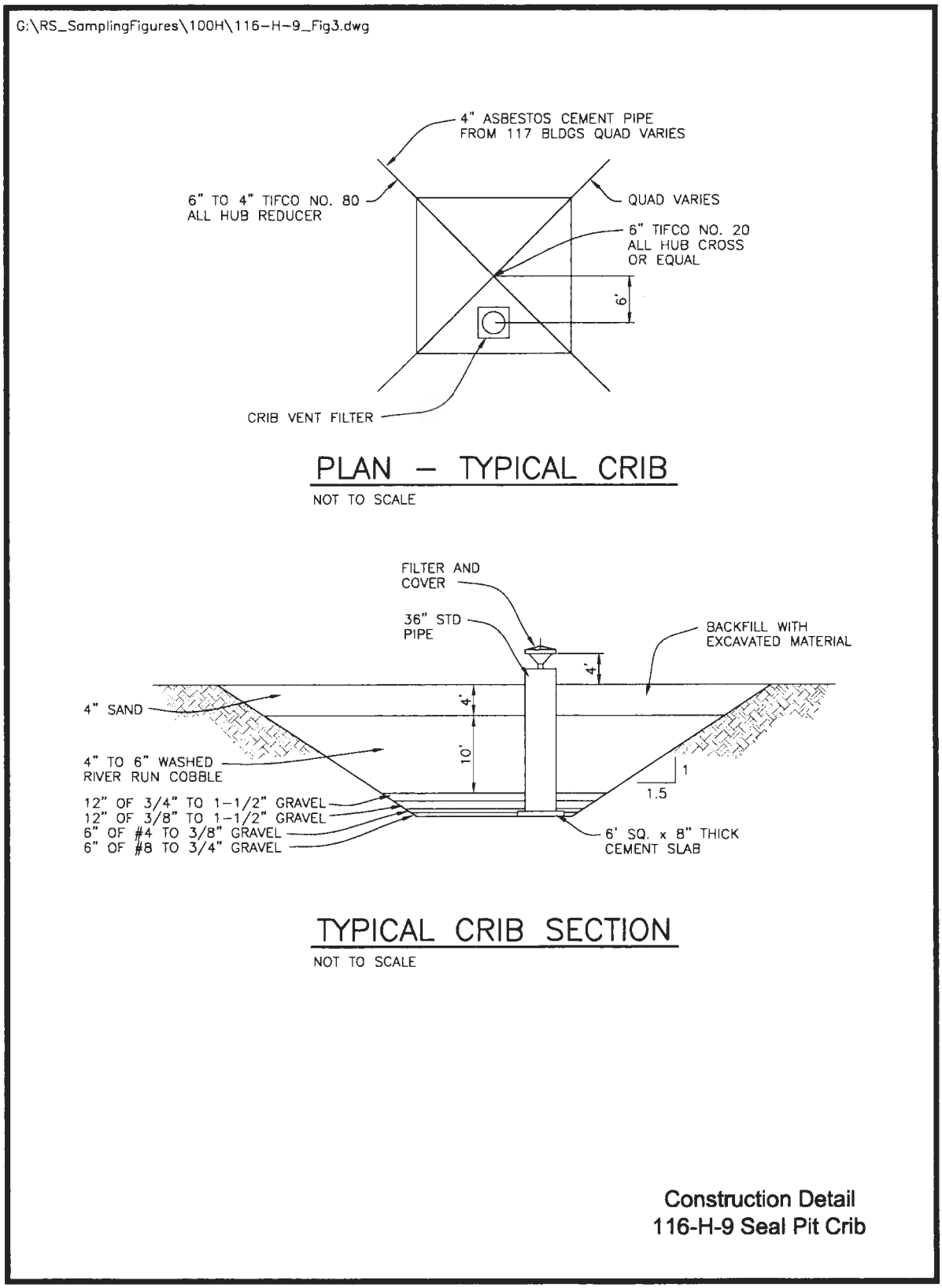

Figure 2 is a photograph of the 116-H-9 waste site in 1998, before excavation of the site. Figure 3 shows where the site is located relative to the former 105-H Building.

Figure 2. Photograph of the 116-H-9 Seal Pit Crib, Dated May 27, 1998, Taken Before Excavation Work (WIDS File Photograph).

Figure 3. The 116-H-9 Waste Site Near the 105-H Reactor Building.

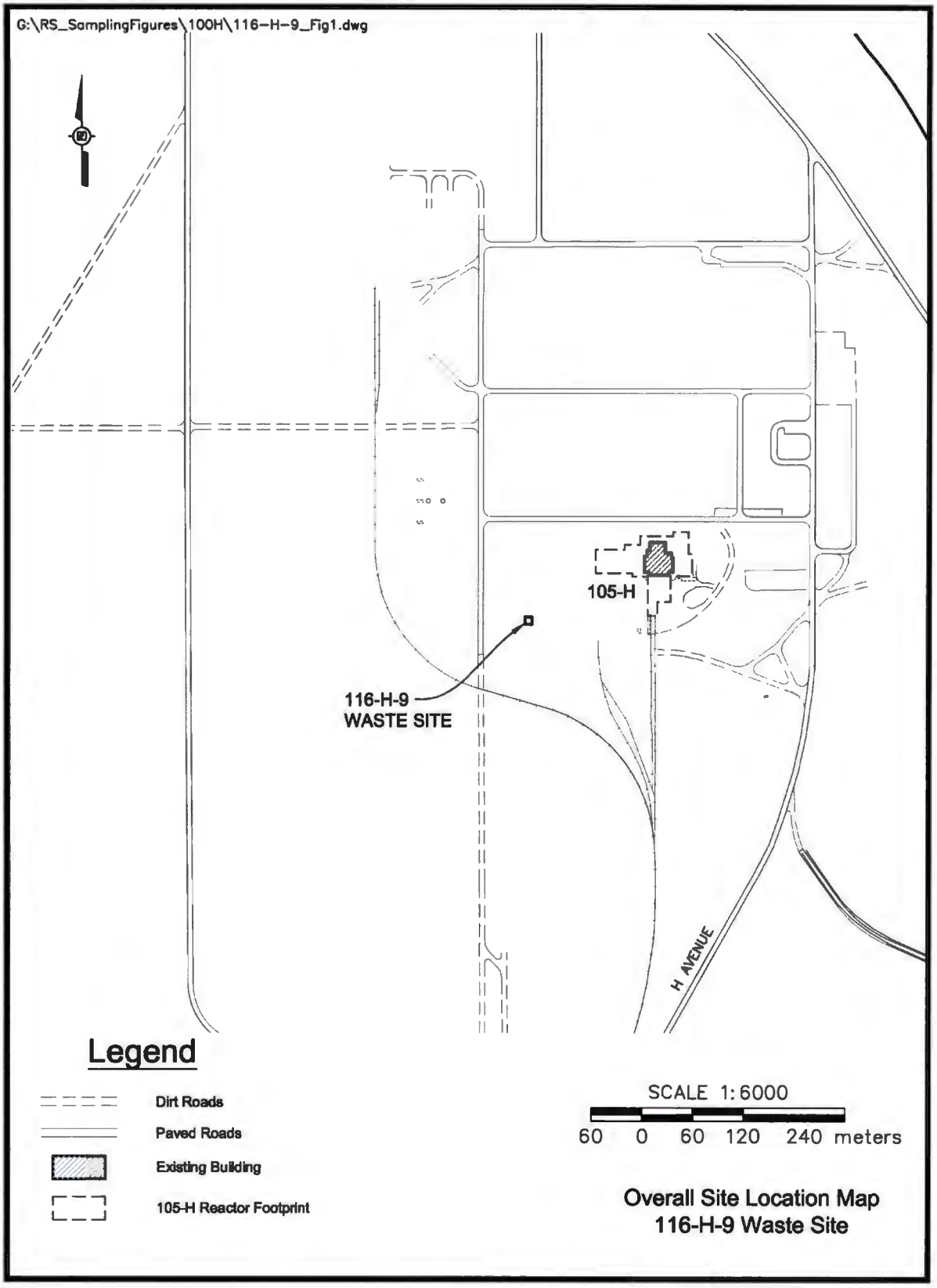

Natural resource staff evaluated the 116-H-9 waste site in March 2008 (WCH 2008a). The vegetation at this site and the surrounding area contained scattered rabbitbrush; however, the entire site has been disturbed by activities in the 100-H Area. Soil/sediment/rock types include sand, cobbles, and gravel.

No cultural resources were anticipated in the project area, although workers were directed to watch for cultural materials during work activities. If any cultural materials were encountered, work in the discovery area would have been stopped until a cultural resource specialist had been notified.

A field visit was performed on October 28, 2008, for the purpose of reviewing site conditions prior to initiating remedial activities. During this time, an area to the east of the site was posted as a Contamination Area due to mud dauber contamination (section of 100-H-37). This area was scraped or cleared to accommodate the appropriate site access.

Geophysical Investigation

A geophysical survey was conducted in September 2008 (Figure 4), with the objectives to characterize the 116-H-9 Seal Pit Crib, determine the lateral extent of the site, locate the concrete/asbestos pipe, and clear an area for grading around the site (WCH 2008b). A well-defined boundary was mapped using ground-penetrating radar, time domain electromagnetics, and a utility locator.

The geophysical survey performed at the 116-H-9 Seal Pit Crib shows a perforated 36-in. vertical steel vent pipe present from the base of the crib to about 1.2 m (4 ft) above grade. Isolated subsurface anomalies are shown scattered around the steel vent pipe, along with the polyurethane barrier that lies at the base of the crib.

REMEDIATION ACTION SUMMARY

Remedial action at the 116-H-9, 117-H Seal Pit Crib began on October 28, 2008, and continued through February 3, 2009, to a depth of approximately 4.6 m (15 ft). The lateral extent of the excavation was determined based on the geophysical survey that clearly defines a distinct boundary. Approximately 2,430 bank cubic meters (3,180 bank cubic yards) of soil and debris was removed for disposal at the Environmental Restoration Disposal Facility (ERDF). The material was direct loaded, and no staging pile was created for this site. In addition, during remediation, no stained soil or radiological or chemical contamination was identified.

Figure 4. 116-H-9 Seal Pit Crib Geophysical Investigation Results.

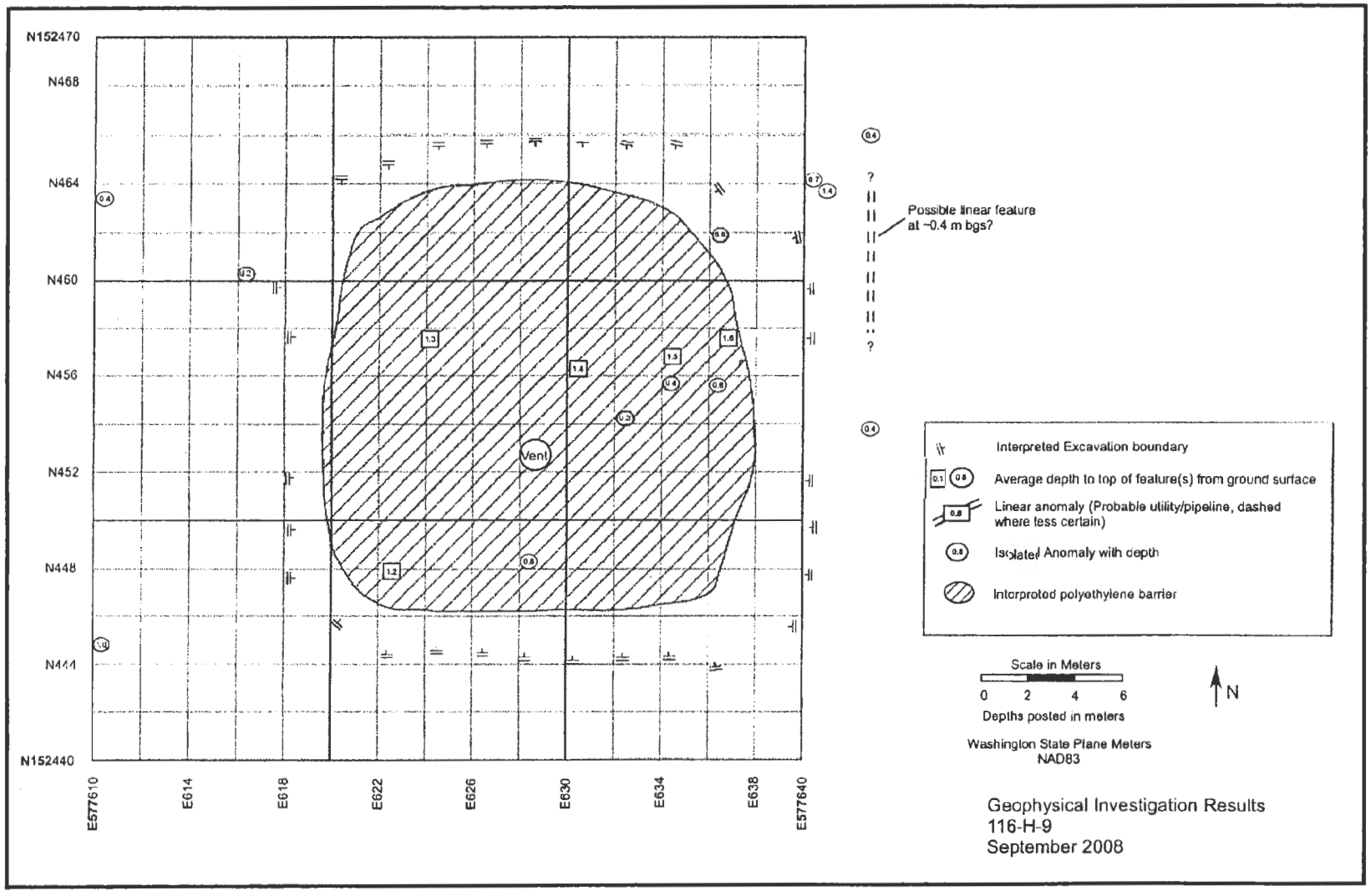

Contaminated soil and debris were excavated and removed from the 116-H-9, 117-H Seal Pit Crib for shipment and disposal to ERDF. The material removed included gravel, the polyurethane vapor barrier, a small portion of the 4-in.-diameter asbestos cement pipe, and the perforated 36-in.-diameter steel vent pipe.

To verify that radiological contamination was not present, a Global Positioning Environmental Radiological Surveyor (GPERS) survey was conducted over the 116-H-9 waste site upon completion of remedial action activities. The results of the GPERS survey are presented in Figure 5, showing that no radionuclide contamination above site background was detected.

VERIFICATION SAMPLING ACTIVITIES

Verification sampling for the 116-H-9 waste site was performed on July 16, 2009 (WCH 2009a), to support a determination that residual contaminant concentrations at this site meet the cleanup criteria specified in the RDR/RAWP (DOE-RL 2009b) and the Remaining Sites ROD (EPA 1999). The verification sample results are provided within the 95% upper confidence limit (UCL) calculation in Appendix A and indicate that the remedial action achieved compliance with the RAOs for the 116-H-9 waste site. The following subsections provide additional discussion of the information used to develop the verification sampling design. A more detailed discussion of the verification sample design can be found in the verification work instruction (WCH 2009b).

Contaminants of Potential Concern

The contaminants of potential concern (COPCs) for the 116-H-9, 117-H Seal Pit Crib, specified in the *100 Area Remedial Action Sampling and Analysis Plan* (DOE-RL 2009a), are identified as cesium-137, europium-152, radium-226, thorium-228, thorium-232, and uranium-238. In addition, carbon-14, cobalt-60, europium-154, europium-155, tritium, plutonium-238, plutonium-239/240, strontium-90, silver, cadmium, chromium (total), hexavalent chromium, mercury, lead, selenium, and polychlorinated biphenyls (PCBs) were also included as COPCs because they are associated with the 117-H Filter Building where seal pits drained into the crib (DOE-RL 2009a). A summary of the laboratory analytical methods for the 116-H-9 waste site is provided in Table 1, and a map of the sample locations is provided in Figure 6.

Verification Sample Design

This section describes the basis for selection of an appropriate sample design and determination of the number of verification samples that were collected. The footprint of the entire excavation was the only decision unit for verification sampling.

Figure 5. 116-H-9 Seal Pit Crib GPERS Radiological Survey.

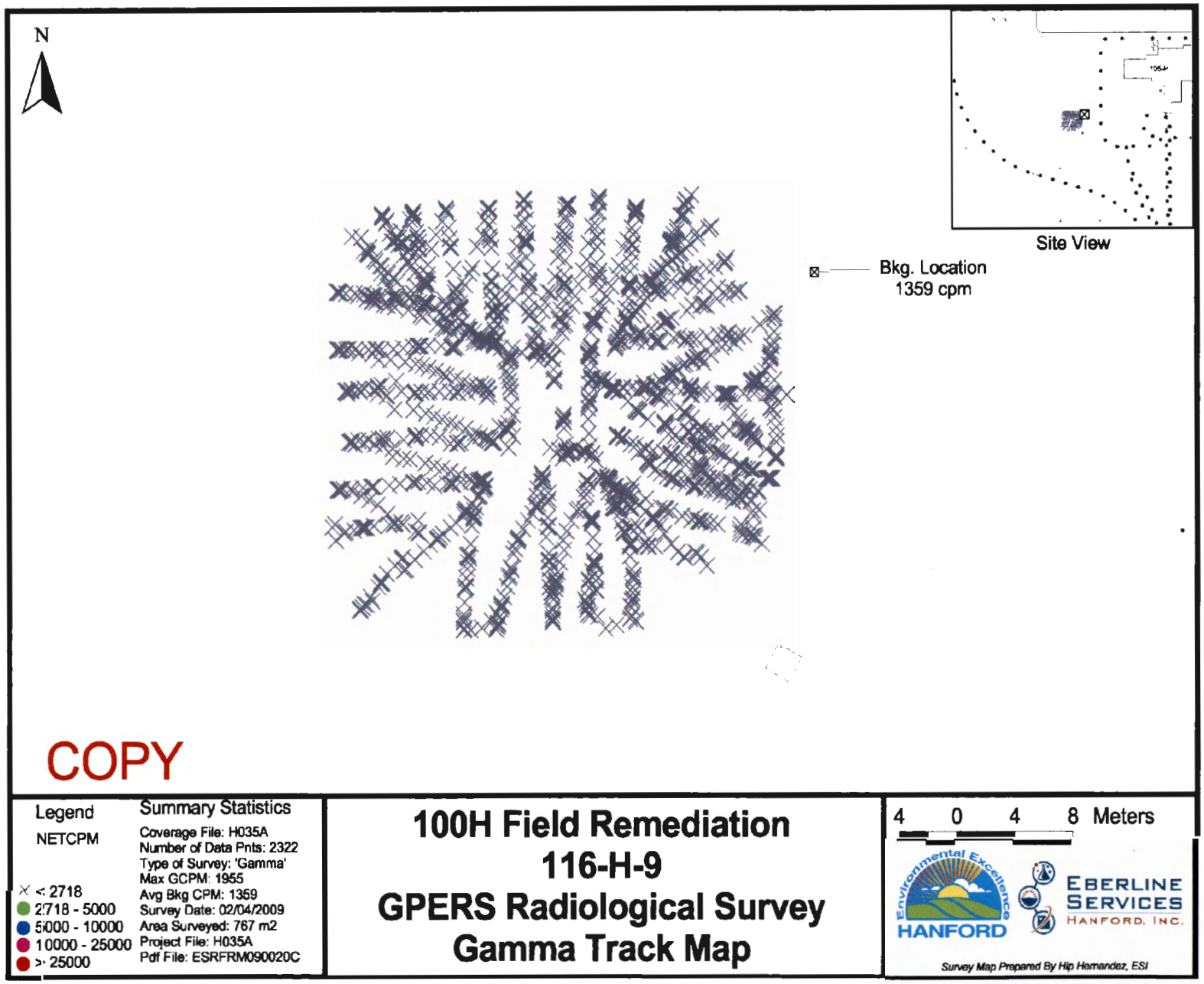

Table 1. Laboratory Analytical Methods.

Analytical Method	Contaminant of Concern/Contaminant of Potential Concern
ICP metals[a] – EPA Method 6010	Chromium (total), lead, silver, cadmium, selenium
Mercury – EPA Method 7471	Mercury
Hexavalent chromium – EPA Method 7196	Hexavalent chromium
GEA – gamma spectroscopy	Cobalt-60, cesium-137, europium-152, europium-154, europium-155, radium-226, thorium-228, thorium-232
Carbon-14 – Liquid scintillation	Carbon-14
Strontium-90 – Liquid scintillation	Strontium-90
Isotopic plutonium	Plutonium-238, plutonium-239/240
Isotopic uranium	Uranium-238
Tritium –Liquid scintillation	Tritium
PCB – EPA Method 8082	PCBs

[a] The expanded list of ICP metals included antimony, arsenic, barium, beryllium, boron, cadmium, chromium (total), cobalt, copper, lead, manganese, molybdenum, nickel, silver, selenium, vanadium, and zinc.

EPA = U.S. Environmental Protection Agency ICP = inductively coupled plasma
GEA = gamma energy analysis PCB = polychlorinated biphenyl

Figure 6. Map of 116-H-9 Verification Soil Sample Locations.

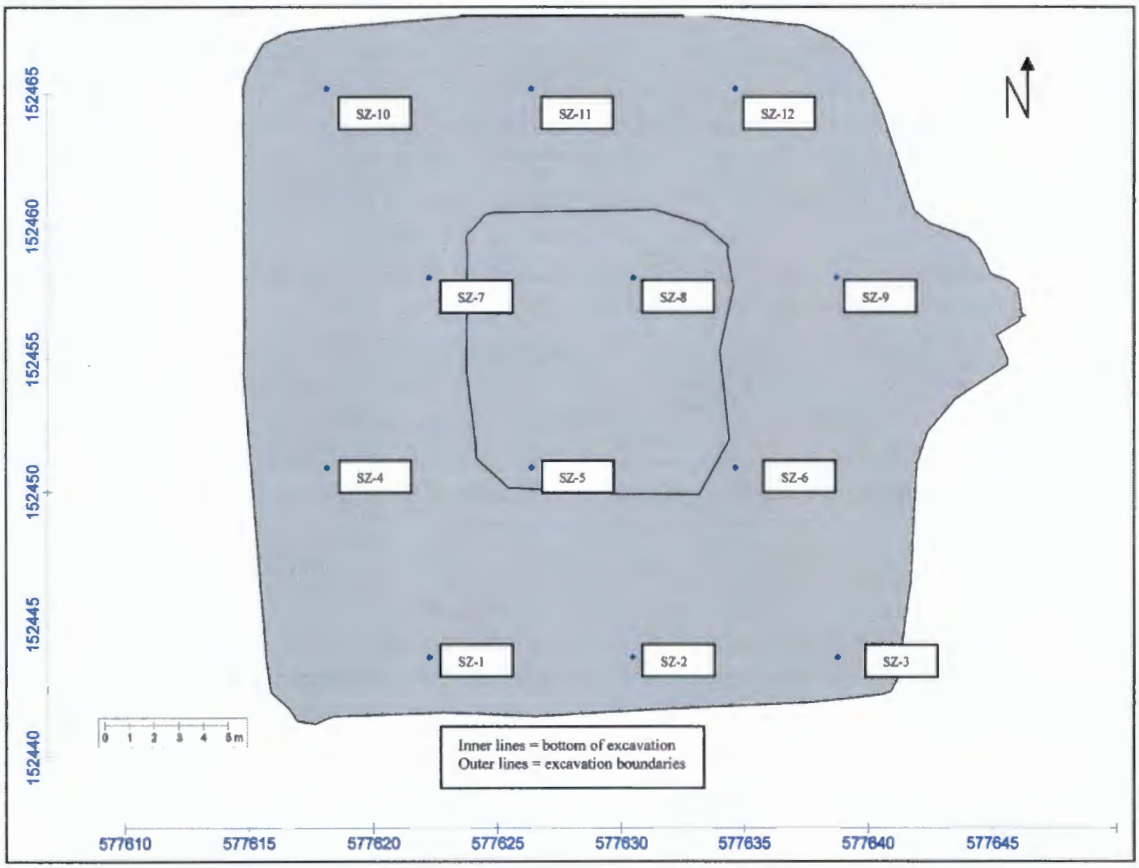

The decision rule for demonstrating compliance with the cleanup criteria requires comparison of the true population mean, as estimated by the 95% UCL on the sample mean, with the cleanup level. Therefore, a statistical sampling design is the preferred verification sampling approach for this site because the distribution of potential residual soil contamination over the site is uncertain. The Washington State Department of Ecology (Ecology) publication *Guidance on Sampling and Data Analysis Methods* (Ecology 1995) recommends that systematic sampling with sample locations distributed over the entire study area be used. This sampling approach is referred to by Ecology as "area-wide sampling." Therefore, sampling locations were distributed over the footprint of the 116-H-9 waste site using random-start systematic grids in an effort to determine the potential presence of residual contamination.

The footprint of the 116-H-9 waste site was delineated in Visual Sample Plan[1] (VSP) software and used as the basis for the location of a random-start systematic grid for verification soil sampling. Twelve soil sample locations were identified in the 116-H-9 waste site. Additional details concerning the use of VSP to develop the statistical sampling design and derive the number of verification samples to collect are discussed in the verification work instruction (WCH 2009b).

Field quality control samples consisted of one equipment blank sample and one field duplicate sample. All samples were submitted for full protocol laboratory analysis. A summary of verification samples collected for the 116-H-9 waste site is provided in Table 2, and a map of the sample locations is provided in Figure 6.

Verification Sample Results

Verification samples were analyzed using U.S. Environmental Protection Agency (EPA)-approved analytical methods. The 95% UCLs on the true population means for residual COPCs were calculated for the excavation footprint as specified by the RDR/RAWP (DOE-RL 2009b) with calculations provided in Appendix A. When a COPC was detected in fewer than 50% of the verification samples collected, the maximum detected value was used for comparison against the RAGs, therefore no statistical evaluation was done for that COPC. If no detections for a given COPC were reported in the data set, then no statistical evaluation or calculations were performed for that COPC. Calculated cleanup levels are not presented in the Cleanup Levels and Risk Calculations Database (Ecology 2009) under *Washington Administrative Code* (WAC) 173-340-740(3) for aluminum, calcium, iron, magnesium, potassium, silicon, and sodium; therefore, these constituents are not considered site COPCs.

Comparisons of the statistical and maximum results for COPCs against the site RAGs are summarized in Table 3. Contaminants that were not detected by laboratory analysis are excluded from these tables. The laboratory-reported verification data results for all constituents are stored in the Environmental Restoration project-specific database prior to archival in the Hanford Environmental Information System and are presented as Attachment 1 of the 95% UCL calculation (Appendix A).

---

[1] Visual Sample Plan is a site map-based user-interface program that may be downloaded at http://dqo.pnl.gov.

Table 2. 116-H-9 Verification Sampling Summary Table.

Sample Location	HEIS Sample Number	Northing (m)	Easting (m)	Sample Analysis
SZ-1	J191D8	577622.3	152443.8	ICP metals,[a] mercury, hexavalent chromium, GEA, carbon-14, isotopic uranium, strontium-90, isotopic plutonium, tritium, PCB
SZ-2	J191D9	577630.5	152443.8	
SZ-3	J191F0	577638.8	152443.8	
SZ-4	J191F1	577618.1	152450.9	
SZ-5	J191F2	577626.4	152450.9	
SZ-6	J191F3	577634.7	152450.9	
SZ-7	J191F4	577622.3	152458.1	
SZ-8	J191F5	577630.5	152458.1	
SZ-9	J191F6	577638.8	152458.1	
SZ-10	J191F7	577618.1	152465.2	
SZ-11	J191F8	577626.4	152465.2	
SZ-12	J191F9	577634.6	152465.2	
Duplicate[b]	J191H0	577622.3	152443.8	
Equipment blank	J191H1	NA	NA	ICP metals,[a] mercury

[a] The expanded list of ICP metals included antimony, arsenic, barium, beryllium, boron, cadmium, chromium (total), cobalt, copper, lead, manganese, molybdenum, nickel, silver, selenium, vanadium, and zinc.
[b] The duplicate soil sample was of sample J191D8, which was chosen at the discretion of the project analytical lead.

GEA = gamma energy analysis
HEIS = Hanford Environmental Information System
ICP = inductively coupled plasma
NA = not applicable
PCB = polychlorinated biphenyl

Table 3. Comparison of Statistical Values to Action Levels for the 116-H-9 Shallow Zone Verification Samples. (2 Pages)

COPC	Statistical Result (mg/kg)	Maximum Result (mg/kg)	Remedial Action Goals[a]			Does the Maximum Exceed RAGs?	Does the Result Pass RESRAD Modeling?
			Direct Exposure	Soil Levels Protective of Groundwater	Soil Levels Protective of the River		
Radionuclides (pCi/g)							
Plutonium-238	0.019	--	38.8	--[b]	--[b]	No	--
Radium-226	0.632 (<BG)	--	1.05	--[b]	--[b]	No	--
Radium-228	1.14	--	1.69	--[b]	--[b]	No	--
Thorium-228	0.968	--	2.26	--[b]	--[b]	No	--
Thorium-232	1.14 (<BG)	--	1.3[c]	--[b]	--[b]	No	--
Uranium-233/234	0.641 (<BG)	--	1.1[c]	1.1[c]	1.1[c]	No	--
Uranium-238	0.687 (<BG)	--	1.1[c]	1.1[c]	1.1[c]	No	--

Table 3. Comparison of Statistical Values to Action Levels for the 116-H-9 Shallow Zone Verification Samples. (2 Pages)

COPC	Statistical Result (mg/kg)	Maximum Result (mg/kg)	Remedial Action Goals[a]			Does the Maximum Exceed RAGs?	Does the Result Pass RESRAD Modeling?
			Direct Exposure	Soil Levels Protective of Groundwater	Soil Levels Protective of the River		
Metals (mg/kg)							
Antimony	0.431 (<BG)	--	32	5[d]	5[d]	No	--
Arsenic	3.59 (<BG)	--	20[d]	20[d]	20[d]	No	--
Barium	67.8 (<BG)	--	5,600	200	400	No	--
Beryllium	0.269 (<BG)	--	10.4[e]	1.51[d]	1.51[d]	No	--
Boron[f]	1.27	--	7,200	320	--	No	--
Cadmium	0.0980 (<BG)	--	13.9[e]	0.81[d]	0.81[d]	No	--
Chromium, total[f]	12.0 (<BG)	--	80,000	18.5[d]	18.5[d]	No	--
Cobalt	6.24 (<BG)	--	24	15.7[d]	--	No	--
Copper	13.7 (<BG)	--	2,960	59.2	22.0[d]	No	--
Hexavalent chromium	--	0.42	2.1[e]	4.8	2	No	--
Lead	6.65 (<BG)	--	353	10.2[d]	10.2[d]	No	--
Manganese	283 (<BG)	--	3,760	512[d]	512[d]	No	--
Mercury	0.0150 (<BG)	--	24	0.33[d]	0.33[d]	No	--
Molybdenum[f]	0.241	--	400	8	--	No	--
Nickel	10.5 (<BG)	--	1,600	19.1[d]	27.4	No	--
Vanadium	42.1 (<BG)	--	560	85.1[d]	--	No	--
Zinc	36.7 (<BG)	--	24,000	480	67.8[d]	No	--
Polychlorinated Biphenyls (mg/kg)							
Aroclor-1254	--	0.0231	0.5	0.017[g]	0.017[g]	Yes	Yes[h]
Aroclor-1260	--	0.00956	0.5	0.017[g]	0.017[g]	No	--

[a] Lookup values and RAGs obtained from the *100 Area Remedial Design Report/ Remedial Action Work Plan* (RDR/RAWP) (DOE-RL 2009b) unless otherwise noted.

[b] No value; because the K_d value for this contaminant is greater than 80 mL/g RESRAD modeling discussed in Appendix C of Rev. 6 of the RDR/RAWP (DOE-RL 2009) predicts the contaminant will not impact groundwater within 1,000 years.

[c] The RAG is below the Hanford Site-specific soil background concentration. The value presented is the Hanford-specific soil background concentration.

[d] Where cleanup levels are less than background, cleanup levels default to background per WAC 173-340-700(4)(d) (Ecology 1996).

[e] Carcinogenic cleanup level calculated based on the inhalation exposure pathway (WAC 173-340-750[3]) using an airborne particulate mass-loading rate of 0.0001 g/m^3 (WDOH 1997).

[f] No Hanford Site-specific or Washington State background value available.

[g] Where cleanup levels are less than RDLs, cleanup levels default to RDLs per WAC 173-340-707(2) and the RDR/ RAWP (DOE-RL 2009b).

[h] The thickness of the vadose zone beneath the bottom of the waste site excavation is approximately 14 m (46 ft) thick and the K_d value for aroclor-1254 is 75.6 mL/g. Based on the *100 Area Analogous Sites RESRAD Calculations* (BHI 2005), residual concentrations of aroclor-1254 with a K_d of 75.6 mL/g are not predicted to migrate more than 1 m (3.3 ft) vertically in 1,000 years. Therefore, residual soil concentrations of aroclor-1254 are predicted to be protective of groundwater and the Columbia River.

-- = not applicable
BG = background
COPC = contaminant of potential concern
K_d = distribution coefficient
RAG = remedial action goal
RDL = required detection limit
RESRAD = RESidual RADioactivity (dose model)
WAC = Washington Administrative Code

VERIFICATION SAMPLE DATA EVALUATION

This section demonstrates that remedial actions at the 116-H-9 waste site have achieved the applicable RAOs by meeting the RAGs and determining that groundwater and the river are protected.

Evaluation of the verification sampling results in Table 3 show that all results are below rural-residential scenario direct exposure, groundwater protection, and Columbia River protection soil RAGs at the 116-H-9 waste site, with the exception of aroclor-1254 in the southeast corner of the excavation. A single sample led to the slightly elevated value for aroclor-1254 exceeding soil cleanup levels for groundwater and river protection. The thickness of the vadose zone beneath the bottom of the waste site excavation is approximately 14 m (46 ft) thick and the distribution coefficient (K_d) value for aroclor-1254 is 75.6 mL/g. Based on the *100 Area Analogous Sites RESRAD Calculations* (BHI 2005), aroclor-1254 with a K_d of 75.6 mL/g is not predicted to migrate more than 1 m (3.3 ft) vertically in 1,000 years. Therefore, residual soil concentrations of aroclor-1254 are predicted to be protective of groundwater and the Columbia River. All other COPCs were either not detected or were quantified below the RAGs.

Comparison of maximum or statistical contaminant concentrations to ecological screening level for the 116-H-9 waste site are shown in Appendix B. Because concentrations of antimony, manganese, and vanadium exceed EPA or Ecology eco-risk screening levels but are below background levels (DOE-RL 2009a, Ecology 1994), it is believed that the presence of these constituents does not pose a risk to ecological receptors. No established background value is available for boron; a final cleanup level for boron, including consideration of background, will be established through the remedial investigation/feasibility study process. Exceedances for boron will be evaluated in the context of additional lines of evidence for risk to ecological receptors as part of the final closeout decision for this site.

When using a statistical sampling approach, a RAG requirement for nonradionuclides is the WAC 173-340-740(7)(e) three-part test. The WAC 173-340 three-part test consists of the following criteria: (1) the cleanup verification 95% UCL value must be less than the cleanup level, (2) no single detection can exceed two times the cleanup criteria, and (3) the percentage of samples exceeding the cleanup criteria must be less than 10% of the data set. The application of the three-part test for the 116-H-9 waste site is included in the statistical calculations (Appendix A). The results of this evaluation indicate that all residual COC/COPC concentrations pass the three-part test in comparison against applicable RAGs, with the exception of aroclor-1254 in comparison against the soil RAGs for groundwater and river protection. As described previously, RESRAD modeling (BHI 2005) predicts that this constituent will not reach groundwater (and, therefore, the river) within 1,000 years.

Assessment of the risk requirements for the 116-H-9 waste site is determined by calculation of the direct contact hazard quotient and carcinogenic (excess cancer) risk values for nonradionuclides. These calculations are located in Appendix A. The requirements include an individual hazard quotient of less than 1.0, a cumulative hazard quotient of less than 1.0, an individual contaminant carcinogenic risk of less than 1×10^{-6}, and a cumulative excess carcinogenic risk of less than 1×10^{-5}. These risk values were conservatively calculated using

the 95% UCL or maximum values (Appendix A) from the samples collected at the 116-H-9 waste site.

Risk values are not calculated for constituents that were not detected or were detected at concentrations below Hanford Site or Washington State background values. The calculations indicate that all individual hazard quotients for noncarcinogenic constituents are less than 1.0. The cumulative hazard quotient for the 116-H-9 waste site is 1.7×10^{-2}. All individual cumulative carcinogenic risk values are less than 1×10^{-6}. The cumulative carcinogenic risk value is 2.7×10^{-7}. Therefore, nonradionuclide risk requirements are met.

DATA QUALITY ASSESSMENT

A data quality assessment (DQA) was performed to compare the verification sampling approaches and resulting analytical data with the sampling and data quality requirements specified by the project objectives and performance specifications. The DQA for the 116-H-9 waste site establishes that the data are of the right type, quality, and quantity to support site verification decisions within specified error tolerances. The evaluation verified that the sample design and resulting data set are acceptable for decision-making purposes. The detailed DQA is presented in Appendix C.

SUMMARY FOR INTERIM CLOSURE

The 116-H-9 waste site has been evaluated in accordance with the Remaining Sites ROD (EPA 1999). Verification sampling results support an evaluation that residual contaminant concentrations at the 116-H-9 waste site do not preclude any future uses (as bounded by the rural-residential scenario) and allow for unrestricted use of shallow zone soils (i.e., surface to 4.6 m [15 ft] deep). The results also demonstrate that residual contaminant concentrations are protective of groundwater and the Columbia River. Therefore, the 116-H-9 waste site does not pose a risk to human health or the environment, and no institutional controls are required. A reclassification to Interim Closed Out is supported for the 116-H-9, 117-H Seal Pit Crib waste site.

REFERENCES

40 CFR 141, "National Primary Drinking Water Regulations," *Code of Federal Regulations*, as amended.

BHI, 2005, *100 Area Analogous Sites RESRAD Calculations,* 0100X-CA-V0050, Rev. 0, Bechtel Hanford, Inc., Richland, Washington.

Deford, D. H. and M. W. Einan, 1995, *100-H Area Technical Baseline Report*, BHI-00127, Rev. 0, Bechtel Hanford, Inc., Richland, Washington.

DOE Order 5400.5, *Radiation Protection of the Public and the Environment*, as amended, U.S. Department of Energy, Washington, D.C.

DOE-RL, 2007, *Tri-Party Agreement Handbook Management Procedures*, RL-TPA-90-0001, Guideline Number TPA-MP-14, "Maintenance of the Waste Information Data System (WIDS)," Rev. 1, U.S. Department of Energy, Richland Operations Office, Richland, Washington.

DOE-RL, 2009a, *100 Area Remedial Action Sampling and Analysis Plan,* DOE/RL-96-22, Rev. 5, U.S. Department of Energy, Richland Operations Office, Richland, Washington.

DOE-RL, 2009b, *Remedial Design Report/Remedial Action Work Plan for the 100 Area,* DOE/RL-96-17, Rev. 6, U.S. Department of Energy, Richland Operations Office, Richland, Washington.

Ecology, 1994, *National Background Soil Metals Concentrations in Washington State*, Publication No. 94-115, Washington State Department of Ecology, Olympia, Washington.

Ecology, 1995, *Guidance on Sampling and Data Analysis Methods*, Publication No. 94-49, Washington State Department of Ecology, Olympia, Washington.

Ecology, 1996, "The Model Toxics Control Act—Cleanup" *Washington Administrative Code* (WAC) 173-340, Washington State Department of Ecology, Olympia, Washington.

Ecology, 2009, Cleanup Levels and Risk Calculations (CLARC) Database, Washington State Department of Ecology, Olympia, Washington, <https://fortress.wa.gov/ecy/clarc.CLARCHome.aspx>.

EPA, 1999, *Interim Action Record of Decision for the 100-BC-1, 100-BC-2, 100-DR-1, 100-DR-2, 100-FR-1, 100-FR-2, 100-HR-1, 100-HR-2, 100-KR-1, 100-KR-2, 100-IU-2, 100-IU-6, and 200-CW-3 Operable Units, Hanford Site, Benton County, Washington,* U.S. Environmental Protection Agency, Region 10, Seattle, Washington.

WAC 173-340, 1996, "Model Toxics Control Act—Cleanup," *Washington Administrative Code.*

WCH, 2008a, "Ecological and Cultural Resources Reviews for Field Remediation of Waste Sites at the 100-H Area Including 100-H-33, 116-H-5, 116-H-9, 118-H-1, 118-H-2, 118-H-3, 118-H-4, and 600-152 (08-ER-017)", Internal Office Memorandum, CCN 138562 to A. L. Johnson from D. D. Teel, Washington Closure Hanford, Richland, Washington, March 19.

WCH, 2008b, *Field Remediation Geophysical Site Investigation Summary 116-H-9 Seal Pit Crib,* GI #0590319, Washington Closure Hanford, Richland, Washington.

WCH, 2009a, *100H Field Remediation and Sampling Log,* Logbook EL-1627-2, pp. 88-89, Washington Closure Hanford, Richland, Washington.

WCH, 2009b, *Work Instruction for Verification Sampling of 116-H-9, 117-H Seal Pit Crib,* 0100H-WI-G0021, Rev. 0, Washington Closure Hanford, Richland, Washington.

WDOH, 1997, *Hanford Guidance for Radiological Cleanup,* WDOH/320-015, Rev. 1, Washington State Department of Health, Olympia, Washington.

APPENDIX A

CALCULATIONS

APPENDIX A

CALCULATION BRIEFS

The calculations in this appendix are kept in the active Washington Closure Hanford project files and are available upon request. When the project is completed, the file will be stored in a U.S. Department of Energy, Richland Operations Office repository. This calculation has been prepared in accordance with ENG-1, *Engineering Services*, ENG-1-4.5, "Project Calculations," Washington Closure Hanford, Richland, Washington. The following calculations are provided in this appendix:

116-H-9 Seal Pit Crib Cleanup Verification 95% UCL Calculation, 0100H-CA-V0111, Rev. 1, Washington Closure Hanford, Richland, Washington.

116-H-9 Seal Pit Crib Direct Contact Hazard Quotient and Carcinogenic Risk Calculation, 0100H-CA-V0114, Rev. 0, Washington Closure Hanford, Richland, Washington.

116-H-9 Seal Pit Crib Hazard Quotient and Carcinogenic Risk Calculation for Protection of Groundwater, 0100H-CA-V0116, Rev. 0, Washington Closure Hanford, Richland, Washington.

DISCLAIMER FOR CALCULATIONS

The calculations that are provided in this appendix have been generated to document compliance with established cleanup levels. These calculations should be used in conjunction with other relevant documents in the administrative record.

Acrobat 8.0

CALCULATION COVER SHEET

Project Title: 100-H Field Remediation **Job No. 14655**

Area: 100-H

Discipline: Environmental *Calculation No: 0100H-CA-V0111

Subject: 116-H-9 Seal Pit Crib Cleanup Verification 95% UCL Calculation

Computer Program: Excel Program No: Excel 2003

The attached calculations have been generated to document compliance with established cleanup levels. These calculations should be used in conjunction with other relevant documents in the administrative record.

Committed Calculation ☒ Preliminary ☐ Superseded ☐ Voided ☐

Rev.	Sheet Numbers	Originator	Checker	Reviewer	Approval	Date
0	Cover = 1 Sheets = 11 Attm. 1 = 5 Total = 17	J. D. Skoglie	H. M. Sulloway	L. D. Habel	D. F. Obenauer	9/28/09

SUMMARY OF REVISION

WCH-DE-018 (05/08/2007) *Obtain Calc. No. from Document Control and Form from Intranet

Washington Closure Hanford

CALCULATION SHEET

Originator J. D. Skoglie	**Date** 09/21/09	**Calc. No.** 0100H-CA-V0111	**Rev. No.** 0
Project 100-H Field Remediation	**Job No.** 14655	**Checked** H. M. Sulloway	**Date** 09/21/09
Subject 116-H-9 Seal Pit Crib Cleanup Verification 95% UCL Calculations			**Sheet No.** 1 of 11

Summary

Purpose:
Calculate the 95% upper confidence limit (UCL) values to evaluate compliance with cleanup standards for the subject site. Also, perform the *Washington Administrative Code* (WAC) 173-340-740(7)(e) Model Toxics Control Act (MTCA) 3-part test for nonradionuclide analytes and calculate the relative percent difference (RPD) for primary-duplicate sample pairs for each contaminant of concern (COC) and contaminant of potential concern (COPC), as necessary.

Table of Contents:
Sheets 1 to 4 - Calculation Sheet Summary
Sheet 5 to 7- Calculation Sheet Verification Data - Excavation
Sheet 8 to 10 - Ecology Software (MTCAStat) Results
Sheet 11 - Calculation Sheet Split - Duplicate Analysis
Attachment 1 - 116-H-9, Verification Sampling Results (5 sheets)

Given/References:
1) Sample Results (Attachment 1).
2) Background values and remedial action goals (RAGs) are taken from DOE-RL (2005b), DOE-RL (2001), and Ecology (1996).
3) DOE-RL, 2001, *Hanford Site Background: Part 1, Soil Background for Nonradioactive Analytes*, DOE/RL-92-24, Rev. 4, U.S. Department of Energy, Richland Operations Office, Richland, Washington.
4) DOE-RL, 2005a, *100 Area Remedial Action Sampling and Analysis Plan* (SAP), DOE/RL-96-22, Rev. 4, U.S. Department of Energy, Richland Operations Office, Richland, Washington.
5) DOE-RL, 2005b, *Remedial Design Report/Remedial Action Work Plan for the 100 Area* (RDR/RAWP), DOE/RL-96-17, Rev. 5, U.S. Department of Energy, Richland Operations Office, Richland, Washington.
6) Ecology, 1992, *Statistical Guidance for Ecology Site Managers*, Publication #92-54, Washington Department of Ecology, Olympia, Washington.
7) Ecology, 1993, *Statistical Guidance for Ecology Site Managers, Supplement S-6, Analyzing Site or Background Data with Below-detection Limit or Below-PQL Values (Censored Data Sets),* Publication #92-54, Washington Department of Ecology, Olympia, Washington.
8) Ecology, 1996, *Model Toxic Control Act Cleanup Levels and Risk Calculations (CLARC II),* Publication #94-145, Washington State Department of Ecology, Olympia, Washington.
9) Ecology, 2005, Cleanup Levels and Risk Calculations (CLARC) Database, Washington State Department of Ecology, Olympia, Washington, <https://fortress.wa.gov/ecy/clarc/CLARCHome.aspx>.
10) WAC 173-340, 1996, "Model Toxic Control Act - Cleanup," *Washington Administrative Code.*

Solution:
Calculation methodology is described in Ecology Pub. #92-54 (Ecology 1992, 1993), below, and in the RDR/RAWP (DOE-RL 2005b). Use data from attached worksheets to perform the 95% UCL calculation for each analyte, the WAC 173-340-740(7)(e) 3-part test for nonradionuclides, and the RPD calculations for each COC/COPC. The hazard quotient and carcinogenic risk calculations are located in a separate calculation brief as an appendix to the Cleanup Verification Package (RSVP).

Calculation Description:
The subject calculations were performed on statistical data from soil verification samples (Attachment 1) from the 116-H-9 Seal Pit Crib. The data were entered into an EXCEL 2003 spreadsheet and calculations performed by using the built-in spreadsheet functions and/or creating formulae within the cells. The statistical evaluation of data for use in accordance with the RDR/RAWP (DOE-RL 2005b) is documented by this calculation. Duplicate RPD results are used in evaluation of data quality within the RSVP for this site.

Methodology:
The excavation area of 116-H-9 Seal Pit Crib underwent statistical sampling and is considered one decision unit for verification sampling.

Analytical results for all sampling locations are summarized in the tables provided on sheets 3 and 4. Further information of the sample data quality is presented in the data quality assessment section of the associated RSVP.

Washington Closure Hanford **CALCULATION SHEET**

Originator J. D. Skoglie **Date** 09/21/09 **Calc. No.** 0100H-CA-V0111 **Rev. No.** 0
Project 100-H Field Remediation **Job No.** 14655 **Checked** H. M. Sulloway **Date** 09/21/09
Subject 116-H-9 Seal Pit Crib Cleanup Verification 95% UCL Calculations **Sheet No.** 2 of 11

Summary (continued)

Methodology, continued:

For nonradioactive analytes with ≤50% of the data below detection limits, the statistical value calculated to evaluate the effectiveness of cleanup is the 95% UCL. For nonradioactive analytes with >50% of the data below detection limits, as determined by direct inspection of the sample results (Attachment 1), the maximum detected value for the data set (which includes primary and duplicate samples) is used instead of the 95% UCL, and no further calculations are performed for those data sets. For convenience, these maximum detected values are included in the summary tables that follow. The 95% UCL was not calculated for data sets with no reported detections. Calculated cleanup levels are not available in Ecology (2005) under WAC 173-340-740(3) for aluminum, calcium, iron, magnesium, potassium, silicon, and sodium; therefore, these constituents are not considered site COCs/COPCs and are also not included in these calculations. The 95% UCL values were not calculated for potassium-40, radium-226, radium-228, thorium-228, and thorium-232 based on natural occurence at the Hanford Site.

All nonradionuclide data reported as being undetected are set to ½ the detection limit value for calculation of the statistics (Ecology 1993). For the statistical evaluation of duplicate sample pairs, the samples are averaged before being included in the data set, after adjustments for censored data as described above. For radionuclide data, calculation of the statistics is done using the reported value. In cases where the laboratory does not report a value below the minimum detectable activity (MDA), half of the MDA is used in the calculation. For the statistical evaluation of duplicate sample pairs, the samples are averaged before being included in the data set, after adjustments for censored data as described above.

For nonradionuclides, the WAC 173-340 statistical guidance suggests that a test for distributional form be performed on the data and the 95% UCL calculated on the appropriate distribution using Ecology software. For nonradionuclide small data sets (n < 10), the calculations are performed assuming nonparametric distribution, so no tests for distribution are performed. For nonradionuclide data sets of ten or greater, as for the subject site, distributional testing is done using Ecology's MTCAStat software (Ecology 1993). Due to differences in addressing censored data between the RDR/RAWP (DOE-RL 2005b) and MTCAStat coding and due to a limitation in the MTCAStat coding (no direct capability to address variable quantitation limits within a data set), substitutions for censored data are performed before software input and the resulting data set treated as uncensored.

The WAC 173-340-740(7)(e) 3-part test is performed for nonradionuclide analytes only and determines if:
1) the 95% UCL exceeds the most stringent cleanup limit for each COPC/COC,
2) greater than 10% of the raw data exceed the most stringent cleanup limit for each COPC/COC,
3) the maximum value of the raw data set exceeds two times the most stringent cleanup limit for each COPC/COC.

The WAC 173-340-740(7)(e) 3-part test is not performed for COPCs where the statistical value defaults to the maximum value in the data set. Instead, direct comparison of the maximum value against site remedial action goals (RAGs) (within the RSVP) is used as the compliance basis.

The RPD is calculated when both the primary value and the duplicate value for a given analyte are above detection limits and are greater than 5 times the target detection limit (TDL). The TDL is a laboratory detection limit pre-determined for each analytical method and is listed in Table II-1 of the SAP (DOE-RL 2005a). Where direct evaluation of the attached sample data showed that a given analyte was not detected in the primary and/or duplicate sample, further evaluation of the RPD value was not performed. The RPD calculations use the following formula:

$$RPD = [\,|M-S|/((M+S)/2)]*100$$

where, M = Main Sample Value S = Split (or duplicate) Sample Value

For quality assurance/quality control (QA/QC) duplicate RPD calculations, a value less than 30% indicates the data compare favorably. If the RPD is greater than 30%, further investigation regarding the usability of the data is performed. To assist in the identification of anomalous sample pairs, when an analyte is detected in the primary or duplicate sample, but was quantified at less than 5 times the TDL in one or both samples, an additional parameter is evaluated. In this case, if the difference between the primary and duplicate result exceeds a control limit of 2 times the TDL, further assessment regarding the usability of the data is performed. Additional discussion as necessary is provided in the data quality assessment section of the applicable RSVP.

Washington Closure Hanford **CALCULATION SHEET**

Originator J. D. Skoglie **Date** 09/22/09 **Calc. No.** 0100H-CA-V011 **Rev. No.** 0
Project 100-H Field Remediation **Job No.** 14655 **Checked** H. M. Sulloway **Date** 09/22/09
Subject 116-H-9 Seal Pit Crib Cleanup Verification 95% UCL Calculations **Sheet No.** 3 of 11

Summary (continued)

Results:
The results presented in the tables that follow include the summary of the results of the 95% UCL calculations for the shallow zone excavation, the WAC 173-340-740(7)(e) 3-part test evaluation, and the RPD calculations, and are for use in risk analysis and the RSVP for this site.

Results Summary - Shallow Zone [a]

Analyte	95% UCL Result	Maximum Result	Units
Plutonium-238	0.019	–	pCi/g
Uranium-233/234	0 (< BG)	–	pCi/g
Uranium-238	0 (< BG)	–	pCi/g
Antimony	0.431	–	mg/kg
Arsenic	3.59	–	mg/kg
Barium	67.8	–	mg/kg
Beryllium	0.269	–	mg/kg
Boron	1.27	–	mg/kg
Cadmium	0.0980	–	mg/kg
Chromium	12.0	–	mg/kg
Cobalt	6.24	–	mg/kg
Copper	13.7	–	mg/kg
Lead	6.65	–	mg/kg
Manganese	283	–	mg/kg
Mercury	0.0150	–	mg/kg
Molybdenum	0.241	–	mg/kg
Nickel	10.5	–	mg/kg
Vanadium	42.1	–	mg/kg
Zinc	36.7	–	mg/kg
Hexavalent Chromium	–	0.42	mg/kg
Aroclor-1254	–	0.0231	mg/kg
Aroclor-1260	–	0.00956	mg/kg

WAC 173-340-740(7)(e) Evaluation:

WAC 173-340 3-Part Test for most stringent RAG:

95% UCL > Cleanup Limit?	NO
> 10% above Cleanup Limit?	NO
Any sample > 2x Cleanup Limit?	NO

[a]The 95% UCL result or maximum value, depending on data censorship, as described in the methodology section.

Relative Percent Difference Results and QA/QC Analysis[a]

Analyte	Shallow Zone Duplicate Analysis
Potassium-40	2.1%
Aluminum	8.5%
Barium	12.4%
Calcium	0.2%
Chromium	5.2%
Copper	8.4%
Iron	2.0%
Lead	6.3%
Magnesium	6.7%
Manganese	8.3%
Silicon	23.8%
Vanadium	5.3%
Zinc	5.5%

[a]RPD listed where result produced, based on criteria. If RPD not required, no value is listed. The significance of the reported RPD values, including values greater than 30%, is addressed in the data quality assessment section of the RSVP.

-- = not applicable
B = blank contamination (inorganic constituents)
C = Sample was <= 5X the blank concentration
DE = direct exposure
GW = groundwater
J = estimate
L = dilution indicating physical and chemical interference are present
M = sample duplicate precision not met
MTCA = *Model Toxics Control Act*
PQL = practical quantitation limit
Q = qualifier
QA/QC = quality assurance/quality control
RAG = remedial action goal
RDR/RAWP = remedial design report/remedial action work plan
RESRAD = RESidual RADioactivity (dose model)
RPD = relative percent difference
RSVP = remaining sites verification package
SAP = sampling and analysis plan
TDL = target detection limit
U = undetected
UCL = upper confidence limit
WAC = Washington Administrative Code

Washington Closure Hanford

CALCULATION SHEET

Originator J. D. Skoglie **Date** 09/22/09 **Calc. No.** 0100H-CA-V0111 **Rev. No.** 0
Project 100-H Field Remediation **Job No.** 14655 **Checked** H. M. Sullaway **Date** 09/22/09
Subject 116-H-9 Seal Pit Crib Cleanup Verification 95% UCL Calculations **Sheet No** 4 of 11

Summary (continued)

Analytes	Maximum Result For All Detected Analytes in Statistical Data Sets*	Units
Aluminum	9750	mg/kg
Antimony	0.534	mg/kg
Arsenic	4.26	mg/kg
Barium	94.3	mg/kg
Beryllium	0.354	mg/kg
Boron	1.52	mg/kg
Cadmium	0.112	mg/kg
Calcium	7470	mg/kg
Chromium	13.4	mg/kg
Cobalt	7.75	mg/kg
Copper	16.2	mg/kg
Hexavalent Chromium	0.42	mg/kg
Iron	22100	mg/kg
Lead	8.84	mg/kg
Magnesium	4990	mg/kg
Manganese	351	mg/kg
Mercury	0.0182	mg/kg
Molybdenum	0.286	mg/kg
Nickel	11.9	mg/kg
Potassium	1930	mg/kg
Silicon	1380	mg/kg
Sodium	189	mg/kg
Vanadium	49.0	mg/kg
Zinc	43.3	mg/kg
Aroclor-1254	0.0231	mg/kg
Aroclor-1260	0.00956	mg/kg

*The maximum result is shown for all non-radiological analytes with at least one detected result. This summary is for use in comparison to ecological screening values.

CALCULATION SHEET

Washington Closure Hanford

Originator J. D. Skoglie

Project 100-H Field Remediation

Subject 116-H-9 Seal Pit Crib Cleanup Verification 95% UCL Calculations

Date 09/21/09

Job No. 14655

Calc. No. 0100H-CA-V0111

Checked H. M. Sulloway

Rev. No. 0

Date 09/21/09

Sheet No. 5 of 11

116-H-9 Statistical Calculations

Verification Data -Shallow Zone

Sample Area	Sample Number	Sample Date	Plutonium-238 pCi/g	Q	MDA	Uranium-233/234 pCi/g	Q	MDA	Uranium-238 pCi/g	Q	MDA	Antimony mg/kg	Q	PQL	Arsenic mg/kg	Q	PQL	Barium mg/kg	Q	PQL	Beryllium mg/kg	Q	PQL	Boron mg/kg	Q	PQL
SZ-1	J191D8	7/16/09	0.081	U	0.207	0.426		0.155	0.588		0.155	0.740	UJ	0.740	2.73		0.740	49.8		0.370	0.209		0.148	1.09	B	1.48
Duplicate of J191D8	J191H0	7/16/09	0.017	U	0.160	0.776		0.270	0.635		0.270	0.308	J	0.824	2.38		0.824	44.0		0.412	0.200		0.165	0.824	B	1.65
SZ-2	J191D9	7/16/09	0.026	U	0.197	0.654		0.156	0.880		0.156	0.389	J	0.900	3.75		0.900	60.9		0.450	0.241		0.180	1.34	B	1.80
SZ-3	J191F0	7/16/09	0	U	0.229	0.697		0.333	0.828		0.333	0.437	J	0.660	3.86		0.660	79.2		0.330	0.347		0.132	1.46		1.32
SZ-4	J191F1	7/16/09	0	U	0.294	0.607		0.232	0.395		0.232	0.241	J	0.656	3.43		0.656	66.4		0.328	0.248		0.131	1.39		1.31
SZ-5	J191F2	7/16/09	0.002	U	0.030	0.655		0.386	0.454		0.386	0.352	J	0.839	2.59		0.839	44.9		0.420	0.189		0.168	0.579	B	1.68
SZ-6	J191F3	7/16/09	0.027		0.025	0.522		0.285	0.373		0.285	0.343	J	0.742	3.51		0.742	50.5		0.371	0.187		0.148	0.926	B	1.48
SZ-7	J191F4	7/16/09	-0.005	U	0.035	0.398		0.152	0.617		0.152	0.379	J	0.915	3.46		0.915	49.9		0.457	0.224		0.183	0.909	B	1.83
SZ-8	J191F5	7/16/09	0	U	0.036	0.527		0.288	0.602		0.288	0.663	UJ	0.663	2.86		0.663	44.0		0.332	0.215		0.133	0.827	B	1.33
SZ-9	J191F6	7/16/09	0.030	U	0.233	0.545		0.278	0.618		0.278	0.514	J	0.805	3.41		0.805	64.6		0.402	0.255		0.160	1.02	B	1.61
SZ-10	J191F7	7/16/09	0	U	0.253	0.344		0.293	0.574		0.293	0.788	UJ	0.788	2.47		0.788	37.6		0.394	0.170		0.158	0.585	B	1.58
SZ-11	J191F8	7/16/09	0	U	0.250	0.790		0.263	0.584		0.263	0.328	J	0.798	2.62		0.798	58.9		0.399	0.191		0.160	1.01	B	1.60
SZ-12	J191F9	7/16/09	0	U	0.255	0.643		0.289	0.794		0.289	0.534	J	1.01	4.26		1.01	94.3		0.503	0.354		0.201	1.52	B	2.01

Statistical Computation Input Data

Sample Area	Sample Number	Sample Date	Plutonium-238 pCi/g	Uranium-233/234 pCi/g	Uranium-238 pCi/g	Antimony mg/kg	Arsenic mg/kg	Barium mg/kg	Beryllium mg/kg	Boron mg/kg
SZ-1	J191D8/ J191H0	7/16/09	0.049	0.601	0.612	0.339	2.56	46.9	0.205	0.957
SZ-2	J191D9	7/16/09	0.026	0.654	0.880	0.389	3.75	60.9	0.241	1.34
SZ-3	J191F0	7/16/09	0	0.697	0.828	0.437	3.86	79.2	0.347	1.46
SZ-4	J191F1	7/16/09	0	0.607	0.395	0.241	3.43	66.4	0.248	1.39
SZ-5	J191F2	7/16/09	0	0.655	0.454	0.352	2.59	44.9	0.189	0.579
SZ-6	J191F3	7/16/09	0.027	0.522	0.373	0.343	3.51	50.5	0.187	0.926
SZ-7	J191F4	7/16/09	-0.005	0.398	0.617	0.379	3.46	49.9	0.224	0.909
SZ-8	J191F5	7/16/09	0	0.527	0.602	0.332	2.86	44.0	0.215	0.827
SZ-9	J191F6	7/16/09	0.030	0.545	0.618	0.514	3.41	64.6	0.255	1.02
SZ-10	J191F7	7/16/09	0	0.344	0.574	0.394	2.47	37.6	0.170	0.585
SZ-11	J191F8	7/16/09	0	0.790	0.584	0.328	2.62	58.9	0.191	1.01
SZ-12	J191F9	7/16/09	0	0.643	0.794	0.534	4.26	94.3	0.354	1.52

Statistical Computations

	Plutonium-238	Uranium-233/234	Uranium-238	Antimony	Arsenic	Barium	Beryllium	Boron
95% UCL based on	Radionuclide data set. Use nonparametric z-statistic.	Radionuclide data set. Use nonparametric z-statistic.	Radionuclide data set. Use nonparametric z-statistic.	Large data set (n ≥10), use MTCAStat lognormal distribution.	Large data set (n ≥10), use MTCAStat lognormal distribution.	Large data set (n ≥10), use MTCAStat lognormal distribution.	Large data set (n ≥10), use MTCAStat lognormal distribution.	Large data set (n ≥10), use MTCAStat lognormal distribution.
N	12	12	12	12	12	12	12	12
% < Detection limit	92%	0%	0%	17%	0%	0%	0%	0%
Mean	0.011	0.582	0.611	0.382	3.23	58.2	0.235	1.04
Standard deviation	0.017	0.124	0.160	0.0817	0.594	16.3	0.0598	0.319
Z-statistic	1.645	1.645	1.645					
95% UCL on mean	0.019	0.641	0.687	0.431	3.59	67.8	0.269	1.27
Maximum value	0.027	0.790	0.880	0.534	4.26	94.3	0.354	1.52
Background	NA	1.1	1.1					
Statistical value above background	0.019	0 (< BG)	0 (< BG)					
Most Stringent Cleanup Limit for nonradionuclide and RAG type (mg/kg)				5 GW & River Protection	20 DE, GW & River Protection	200 GW Protection	1.51 GW & River Protection	320 GW Protection
WAC 173-340 3-PART TEST								
95% UCL > Cleanup Limit?				NA	NA	NA	NA	NO
> 10% above Cleanup Limit?				NA	NA	NA	NA	NO
Any sample > 2X Cleanup Limit?				NA	NA	NA	NA	NO
WAC 173-340 Compliance?				Because all values are below background (5 mg/kg) the WAC 173-340 3-part test is not required.	Because all values are below background (6.5 mg/kg) the WAC 173-340 3-part test is not required.	Because all values are below background (132 mg/kg) the WAC 173-340 3-part test is not required.	Because all values are below background (1.51 mg/kg) the WAC 173-340 3-part test is not required.	The data set meets the 3-part test criteria when compared to the most stringent RAG.

CALCULATION SHEET
Washington Closure Hanford

Originator J. D. Skoglie
Project 100-H Field Remediation
Subject 116-H-9 Seal Pit Crib Cleanup Verification 95% UCL Calculations

Date 09/21/09
Job No. 14655

Calc. No. 0100H-CA-V0111
Checked H. M. Sulloway

Rev. No. 0
Date 09/21/09
Sheet No. 6 of 11

1 **116-H-9 Statistical Calculations**
2 **Verification Data -Shallow Zone**

3	Sample	Sample	Sample	Cadmium			Chromium			Cobalt			Copper			Lead			Manganese			Mercury			Molybdenum		
4	Area	Number	Date	mg/kg	Q	PQL	mg/kg	Q	PQL	mg/kg	Q	PQL	mg/kg	Q	PQL	mg/kg	Q	PQL	mg/kg	Q	PQL	mg/kg	Q	PQL	mg/kg	Q	PQL
5	SZ-1	J191D8	7/16/09	0.106	B	0.185	9.16		0.740	5.16		2.22	13.6		1.48	4.10		0.740	252		0.740	0.0131	B	0.0238	0.231	B	0.740
6	Duplicate of J191D8	J191H0	7/16/09	0.0825	B	0.206	8.70		0.824	4.97		2.47	12.5		1.65	3.85		0.824	232		0.824	0.0101	B	0.0238	0.235	B	0.824
7	SZ-2	J191D9	7/16/09	0.0951	B	0.225	11.7		0.900	6.10		2.70	13.2		1.80	7.02		0.900	287		0.900	0.00917	B	0.0275	0.228	B	0.900
8	SZ-3	J191F0	7/16/09	0.0950	B	0.165	12.5		0.660	7.29		1.98	16.2		1.32	6.25		0.660	311		0.660	0.0182	B	0.0282	0.252	B	0.660
9	SZ-4	J191F1	7/16/09	0.0964	B	0.164	10.8		0.656	5.91		1.97	12.4		1.31	5.02		0.656	267		0.656	0.0131	B	0.0303	0.201	B	0.656
10	SZ-5	J191F2	7/16/09	0.0714	B	0.210	10.7		0.839	4.18		2.52	10.5		1.68	3.75		0.839	221		0.839	0.0170	B	0.0288	0.210	B	0.839
11	SZ-6	J191F3	7/16/09	0.0903	B	0.185	13.1		0.742	5.35		2.23	12.4		1.48	8.84		0.742	236		0.742	0.00935	B	0.0267	0.217	B	0.742
12	SZ-7	J191F4	7/16/09	0.112	B	0.229	10.4		0.915	5.54		2.74	12.7		1.83	7.89		0.915	253		0.915	0.0145	B	0.0274	0.286	B	0.915
13	SZ-8	J191F5	7/16/09	0.0972	B	0.166	11.8		0.663	4.54		1.99	11.7		0.133	4.94		0.663	246		0.663	0.0132	B	0.0300	0.209	B	0.663
14	SZ-9	J191F6	7/16/09	0.0963	B	0.201	11.1		0.805	6.16		2.41	13.3		0.161	5.52		0.805	282		0.805	0.0151	B	0.0290	0.232	B	0.805
15	SZ-10	J191F7	7/16/09	0.0629	B	0.197	10.8		0.788	4.36		2.36	11.8		1.58	3.61		0.788	212		0.788	0.0138	B	0.0303	0.204	B	0.788
16	SZ-11	J191F8	7/16/09	0.0633	B	2.00	9.59		0.798	5.02		2.39	11.9		1.60	4.19		0.798	224		0.798	0.0114	B	0.0297	0.171	B	0.798
17	SZ-12	J191F9	7/16/09	0.111	B	0.251	13.4		1.01	7.75		3.02	15.3		2.01	6.04		1.01	351		1.01	0.0133	B	0.0285	0.251	B	1.01

19 **Statistical Computation Input Data**

20	Sample	Sample	Sample	Cadmium	Chromium	Cobalt	Copper	Lead	Manganese	Mercury	Molybdenum
21	Area	Number	Date	mg/kg	mg/kg	mg/kg	mg/kg	mg/kg	mg/kg	mg/kg	mg/kg
22	SZ-1	J191D8/ J191H0	7/16/09	0.0943	8.93	5.07	13.1	3.98	242	0.0116	0.233
23	SZ-2	J191D9	7/16/09	0.0951	11.7	6.10	13.2	7.02	287	0.00917	0.228
24	SZ-3	J191F0	7/16/09	0.0950	12.5	7.29	16.2	6.25	311	0.0182	0.252
25	SZ-4	J191F1	7/16/09	0.0964	10.8	5.91	12.4	5.02	267	0.0131	0.201
26	SZ-5	J191F2	7/16/09	0.0714	10.7	4.18	10.5	3.75	221	0.0170	0.210
27	SZ-6	J191F3	7/16/09	0.0903	13.1	5.35	12.4	8.84	236	0.00935	0.217
28	SZ-7	J191F4	7/16/09	0.112	10.4	5.54	12.7	7.89	253	0.0145	0.286
29	SZ-8	J191F5	7/16/09	0.0972	11.8	4.54	11.7	4.94	246	0.0132	0.209
30	SZ-9	J191F6	7/16/09	0.096	11.1	6.16	13.3	5.52	282	0.0151	0.232
31	SZ-10	J191F7	7/16/09	0.0629	10.8	4.36	11.8	3.61	212	0.0138	0.204
32	SZ-11	J191F8	7/16/09	0.0633	9.59	5.02	11.9	4.19	224	0.0114	0.171
33	SZ-12	J191F9	7/16/09	0.111	13.4	7.75	15.3	6.04	351	0.0133	0.251

34 **Statistical Computations**

35		Cadmium	Chromium	Cobalt	Copper	Lead	Manganese	Mercury	Molybdenum
36	95% UCL based on	Large data set (n ≥10), lognormal and normal distribution rejected, use z-statistic.	Large data set (n ≥10), use MTCAStat lognormal distribution.	Large data set (n ≥10), use MTCAStat lognormal distribution.	Large data set (n ≥10), use MTCAStat lognormal distribution.	Large data set (n ≥10), use MTCAStat lognormal distribution.	Large data set (n ≥10), use MTCAStat lognormal distribution.	Large data set (n ≥10), use MTCAStat lognormal distribution.	Large data set (n ≥10), use MTCAStat lognormal distribution.
37	N	12	12	12	12	12	12	12	12
38	% < Detection limit	0%	0%	0%	0%	0%	0%	0%	0%
39	Mean	0.0904	11.2	5.61	12.9	5.59	261	0.0133	0.225
40	Standard deviation	0.0163	1.34	1.11	1.56	1.68	40.9	0.00273	0.0297
41	95% UCL on mean	0.0980	12.0	6.24	13.7	6.65	283	0.0150	0.241
42	Maximum value	0.112	13.4	7.75	16.2	8.84	351	0.0182	0.286
43	**Most Stringent Cleanup Limit for nonradionuclide and RAG type (mg/kg)**	0.81 GW & River Protection	18.6 GW & River Protection	15.7 GW Protection	22.0 River Protection	10.2 GW & River Protection	512 GW & River Protection	0.33 GW & River Protection	8.0 GW Protection
44	**WAC 173-340 3-PART TEST**								
45	95% UCL > Cleanup Limit?	NA	NA	NA	NA	NA	NA	NA	NO
46	> 10% above Cleanup Limit?	NA	NA	NA	NA	NA	NA	NA	NO
47	Any sample > 2X Cleanup Limit?	NA	NA	NA	NA	NA	NA	NA	NO
48	**WAC 173-340 Compliance?**	Because all values are below background (0.81 mg/kg) the WAC 173-340 3-part test is not required.	Because all values are below background (18.5 mg/kg) the WAC 173-340 3-part test is not required.	Because all values are below background (15.7 mg/kg) the WAC 173-340 3-part test is not required.	Because all values are below background (22.0 mg/kg) the WAC 173-340 3-part test is not required.	Because all values are below background (10.2 mg/kg) the WAC 173-340 3-part test is not required.	Because all values are below background (512 mg/kg) the WAC 173-340 3-part test is not required.	Because all values are below background (0.33 mg/kg) the WAC 173-340 3-part test is not required.	The data set meets the 3-part test criteria when compared to the most stringent RAG.

CALCULATION SHEET

Washington Closure Hanford

Originator J. D. Skoglie
Project 100-H Field Remediation
Subject 116-H-9 Seal Pit Crib Cleanup Verification 95% UCL Calculations

Date 09/21/09
Job No. 14655

Calc. No. 0100H-CA-V0111
Checked H. M. Sulloway

Rev. No. 0
Date 09/21/09
Sheet No. 7 of 11

116-H-9 Statistical Calculations

Verification Data -Shallow Zone

Sample Area	Sample Number	Sample Date	Nickel mg/kg	Nickel Q	Nickel PQL	Vanadium mg/kg	Vanadium Q	Vanadium PQL	Zinc mg/kg	Zinc Q	Zinc PQL
SZ-1	J191D8	7/16/09	8.86		1.85	38.4		0.740	33.5		2.22
Duplicate of J191D8	J191H0	7/16/09	8.40		2.06	36.4		0.824	31.7		2.47
SZ-2	J191D9	7/16/09	10.7		2.25	42.3		0.900	35.1		2.70
SZ-3	J191F0	7/16/09	11.7		1.65	44.9		0.660	40.2		1.98
SZ-4	J191F1	7/16/09	9.05		1.64	39.0		0.656	35.5		1.97
SZ-5	J191F2	7/16/09	9.66		2.10	27.1		0.839	27.2		2.52
SZ-6	J191F3	7/16/09	9.44		1.85	41.2		0.742	34.2		2.23
SZ-7	J191F4	7/16/09	9.37		2.29	42.0		0.915	35.2		2.74
SZ-8	J191F5	7/16/09	9.81		1.66	26.8		0.663	29.6		1.99
SZ-9	J191F6	7/16/09	9.80		2.01	41.3		0.805	36.7		2.41
SZ-10	J191F7	7/16/09	8.49		1.97	36.4		0.788	26.9		2.36
SZ-11	J191F8	7/16/09	9.99		2.00	37.0		0.798	29.9		2.39
SZ-12	J191F9	7/16/09	11.9		2.51	49.0		1.01	43.3		3.02

Statistical Computation Input Data

Sample Area	Sample Number	Sample Date	Nickel mg/kg	Vanadium mg/kg	Zinc mg/kg
SZ-1	J191D8/ J191H0	7/16/09	8.63	37.4	32.6
SZ-2	J191D9	7/16/09	10.7	42.3	35.1
SZ-3	J191F0	7/16/09	11.7	44.9	40.2
SZ-4	J191F1	7/16/09	9.05	39.0	35.5
SZ-5	J191F2	7/16/09	9.66	27.1	27.2
SZ-6	J191F3	7/16/09	9.44	41.2	34.2
SZ-7	J191F4	7/16/09	9.37	42.0	35.2
SZ-8	J191F5	7/16/09	9.81	26.8	29.6
SZ-9	J191F6	7/16/09	9.80	41.3	36.7
SZ-10	J191F7	7/16/09	8.49	36.4	26.9
SZ-11	J191F8	7/16/09	10.0	37.0	29.9
SZ-12	J191F9	7/16/09	11.9	49.0	43.3

Statistical Computations

	Nickel	Vanadium	Zinc
95% UCL based on	Large data set (n ≥10), use MTCAStat lognormal distribution.	Large data set (n ≥10), use MTCAStat normal distribution.	Large data set (n ≥10), use MTCAStat lognormal distribution.
N	12	12	12
% < Detection limit	0%	0%	0%
Mean	9.88	38.7	33.9
Standard deviation	1.08	6.52	4.87
95% UCL on mean	10.5	42.1	36.7
Maximum value	11.9	49.0	43.3
Most Stringent Cleanup Limit for nonradionuclide and RAG type (mg/kg)	19.1 GW Protection	85.1 GW Protection	67.8 River Protection
WAC 173-340 3-PART TEST			
95% UCL > Cleanup Limit?	NA	NA	NA
> 10% above Cleanup Limit?	NA	NA	NA
Any sample > 2X Cleanup Limit?	NA	NA	NA
WAC 173-340 Compliance?	Because all values are below background (19.1 mg/kg) the WAC 173-340 3-part test is not required.	Because all values are below background (85.1 mg/kg) the WAC 173-340 3-part test is not required.	Because all values are below background (67.8 mg/kg) the WAC 173-340 3-part test is not required.

CALCULATION SHEET

Washington Closure Hanford

Originator J. D. Skoglie
Project 100-H Field Remediation
Subject 116-H-9 Seal Pit Crib Cleanup Verification 95% UCL Calculations

Date 09/21/09
Job No. 14655

Calc. No. 0100H-CA-V0111
Checked H. M. Sullaway

Rev. No. 0
Date 09/21/09
Sheet No. 8 of 11

Ecology Software (MTCAStat) Results, 116-H-9 Shallow Zone

Antimony 95% UCL Calculation

DATA	ID
0.339	J191D8/ J191H0
0.389	J191D9
0.437	J191F0
0.241	J191F1
0.352	J191F2
0.343	J191F3
0.379	J191F4
0.332	J191F5
0.514	J191F6
0.394	J191F7
0.328	J191F8
0.534	J191F9

Number of samples		Uncensored values	
Uncensored	12	Mean	0.382
Censored		Lognormal mean	0.383
Detection limit or PQL		Std. devn.	0.0817
Method detection limit		Median	0.366
TOTAL	12	Min.	0.241
		Max.	0.534

Lognormal distribution? r-squared is: 0.930
Normal distribution? r-squared is: 0.920
Recommendations:
Use lognormal distribution.

UCL (Land's method) is 0.431

Arsenic 95% UCL Calculation

DATA	ID
2.56	J191D8/ J191H0
3.75	J191D9
3.86	J191F0
3.43	J191F1
2.59	J191F2
3.51	J191F3
3.46	J191F4
2.86	J191F5
3.41	J191F6
2.47	J191F7
2.62	J191F8
4.26	J191F9

Number of samples		Uncensored values	
Uncensored	12	Mean	3.23
Censored		Lognormal mean	3.24
Detection limit or PQL		Std. devn.	0.594
Method detection limit		Median	3.42
TOTAL	12	Min.	2.47
		Max.	4.26

Lognormal distribution? r-squared is: 0.922
Normal distribution? r-squared is: 0.928
Recommendations:
Use lognormal distribution.

UCL (Land's method) is 3.59

Barium 95% UCL Calculation

DATA	ID
46.9	J191D8/ J191H0
60.9	J191D9
79.2	J191F0
66.4	J191F1
44.9	J191F2
50.5	J191F3
49.9	J191F4
44.0	J191F5
64.6	J191F6
37.6	J191F7
58.9	J191F8
94.3	J191F9

Number of samples		Uncensored values	
Uncensored	12	Mean	58.2
Censored		Lognormal mean	58.3
Detection limit or PQL		Std. devn.	16.3
Method detection limit		Median	54.7
TOTAL	12	Min.	37.6
		Max.	94.3

Lognormal distribution? r-squared is: 0.970
Normal distribution? r-squared is: 0.919
Recommendations:
Use lognormal distribution.

UCL (Land's method) is 67.8

Beryllium 95% UCL Calculation

DATA	ID
0.206	J191D8/ J191H0
0.241	J191D9
0.347	J191F0
0.248	J191F1
0.189	J191F2
0.187	J191F3
0.224	J191F4
0.215	J191F5
0.255	J191F6
0.170	J191F7
0.191	J191F8
0.354	J191F9

Number of samples		Uncensored values	
Uncensored	12	Mean	0.235
Censored		Lognormal mean	0.236
Detection limit or PQL		Std. devn.	0.0598
Method detection limit		Median	0.220
TOTAL	12	Min.	0.170
		Max.	0.354

Lognormal distribution? r-squared is: 0.909
Normal distribution? r-squared is: 0.849
Recommendations:
Use lognormal distribution.

UCL (Land's method) is 0.269

Boron 95% UCL Calculation

DATA	ID
0.957	J191D8/ J191H0
1.34	J191D9
1.46	J191F0
1.39	J191F1
0.579	J191F2
0.926	J191F3
0.909	J191F4
0.827	J191F5
1.02	J191F6
0.585	J191F7
1.01	J191F8
1.52	J191F9

Number of samples		Uncensored values	
Uncensored	12	Mean	1.04
Censored		Lognormal mean	1.05
Detection limit or PQL		Std. devn.	0.319
Method detection limit		Median	0.984
TOTAL	12	Min.	0.579
		Max.	1.52

Lognormal distribution? r-squared is: 0.930
Normal distribution? r-squared is: 0.939
Recommendations:
Use lognormal distribution.

UCL (Land's method) is 1.27

Cadmium 95% UCL Calculation

DATA	ID
0.0943	J191D8/ J191H0
0.0951	J191D9
0.0950	J191F0
0.0964	J191F1
0.0714	J191F2
0.0903	J191F3
0.112	J191F4
0.0972	J191F5
0.0963	J191F6
0.0629	J191F7
0.0633	J191F8
0.111	J191F9

Number of samples		Uncensored values	
Uncensored	12	Mean	0.0904
Censored		Lognormal mean	0.0907
Detection limit or PQL		Std. devn.	0.0163
Method detection limit		Median	0.0951
TOTAL	12	Min.	0.0629
		Max.	0.112

Lognormal distribution? r-squared is: 0.831
Normal distribution? r-squared is: 0.864
Recommendations:
Reject BOTH lognormal and normal distributions.

UCL (based on Z-statistic) is 0.0980

CALCULATION SHEET

Washington Closure Hanford

Originator J. D. Skoglie
Project 100-H Field Remediation
Subject 116-H-9 Seal Pit Crib Cleanup Verification 95% UCL Calculations

Date 09/21/09
Job No. 14655

Calc. No. 0100H-CA-V0111
Checked H. M. Sulloway

Rev. No. 0
Date 09/21/09
Sheet No. 9 of 11

Ecology Software (MTCAStat) Results, 116-H-9 Shallow Zone

Chromium 95% UCL Calculation

DATA	ID
8.93	J191D8/ J191H0
11.7	J191D9
12.5	J191F0
10.8	J191F1
10.7	J191F2
13.1	J191F3
10.4	J191F4
11.8	J191F5
11.1	J191F6
10.8	J191F7
9.59	J191F8
13.4	J191F9

Number of samples		Uncensored values	
Uncensored	12	Mean	11.2
Censored		Lognormal mean	11.2
Detection limit or PQL		Std. devn.	1.34
Method detection limit		Median	11.0
TOTAL	12	Min.	8.93
		Max.	13.4

Lognormal distribution? r-squared is: 0.975
Normal distribution? r-squared is: 0.977
Recommendations:
Use lognormal distribution.

UCL (Land's method) is 12.0

Cobalt 95% UCL Calculation

DATA	ID
5.07	J191D8/ J191H0
6.10	J191D9
7.29	J191F0
5.91	J191F1
4.18	J191F2
5.35	J191F3
5.54	J191F4
4.54	J191F5
6.16	J191F6
4.36	J191F7
5.02	J191F8
7.75	J191F9

Number of samples		Uncensored values	
Uncensored	12	Mean	5.61
Censored		Lognormal mean	5.61
Detection limit or PQL		Std. devn.	1.11
Method detection limit		Median	5.45
TOTAL	12	Min.	4.18
		Max.	7.75

Lognormal distribution? r-squared is: 0.974
Normal distribution? r-squared is: 0.949
Recommendations:
Use lognormal distribution.

UCL (Land's method) is 6.24

Copper 95% UCL Calculation

DATA	ID
13.1	J191D8/ J191H0
13.2	J191D9
16.2	J191F0
12.4	J191F1
10.5	J191F2
12.4	J191F3
12.7	J191F4
11.7	J191F5
13.3	J191F6
11.8	J191F7
11.9	J191F8
15.3	J191F9

Number of samples		Uncensored values	
Uncensored	12	Mean	12.9
Censored		Lognormal mean	12.9
Detection limit or PQL		Std. devn.	1.56
Method detection limit		Median	12.6
TOTAL	12	Min.	10.5
		Max.	16.2

Lognormal distribution? r-squared is: 0.928
Normal distribution? r-squared is: 0.900
Recommendations:
Use lognormal distribution.

UCL (Land's method) is 13.7

Lead 95% UCL Calculation

DATA	ID
3.98	J191D8/ J191H0
7.02	J191D9
6.25	J191F0
5.02	J191F1
3.75	J191F2
8.84	J191F3
7.89	J191F4
4.94	J191F5
5.52	J191F6
3.61	J191F7
4.19	J191F8
8.04	J191F9

Number of samples		Uncensored values	
Uncensored	12	Mean	5.59
Censored		Lognormal mean	5.60
Detection limit or PQL		Std. devn.	1.68
Method detection limit		Median	5.27
TOTAL	12	Min.	3.61
		Max.	8.84

Lognormal distribution? r-squared is: 0.973
Normal distribution? r-squared is: 0.947
Recommendations:
Use lognormal distribution.

UCL (Land's method) is 6.65

Manganese 95% UCL Calculation

DATA	ID
242	J191D8/ J191H0
287	J191D9
311	J191F0
267	J191F1
221	J191F2
236	J191F3
253	J191F4
246	J191F5
282	J191F6
212	J191F7
224	J191F8
351	J191F9

Number of samples		Uncensored values	
Uncensored	12	Mean	261
Censored		Lognormal mean	261
Detection limit or PQL		Std. devn.	49.9
Method detection limit		Median	250
TOTAL	12	Min.	212
		Max.	351

Lognormal distribution? r-squared is: 0.959
Normal distribution? r-squared is: 0.928
Recommendations:
Use lognormal distribution.

UCL (Land's method) is 283

Mercury 95% UCL Calculation

DATA	ID
0.0116	J191D8/ J191H0
0.00917	J191D9
0.0182	J191F0
0.0131	J191F1
0.0170	J191F2
0.00935	J191F3
0.0145	J191F4
0.0132	J191F5
0.0151	J191F6
0.0138	J191F7
0.0114	J191F8
0.0133	J191F9

Number of samples		Uncensored values	
Uncensored	12	Mean	0.0133
Censored		Lognormal mean	0.0133
Detection limit or PQL		Std. devn.	0.00273
Method detection limit		Median	0.0133
TOTAL	12	Min.	0.00917
		Max.	0.0182

Lognormal distribution? r-squared is: 0.962
Normal distribution? r-squared is: 0.970
Recommendations:
Use lognormal distribution.

UCL (Land's method) is 0.0150

CALCULATION SHEET

Washington Closure Hanford

Originator	J. D. Skoglie	**Date**	09/21/09	**Calc. No.**	0100H-CA-V0111
Project	100-H Field Remediation	**Job No.**	14655	**Checked**	H. M. Sulloway
Subject	116-H-9 Seal Pit Crib Cleanup Verification 95% UCL Calculations				

Rev. No. 0
Date 09/21/09
Sheet No. 10 of 11

Ecology Software (MTCAStat) Results, 116-H-9 Shallow Zone

Molybdenum 95% UCL Calculation

DATA	ID
0.233	J191D8/ J191H0
0.228	J191D9
0.262	J191F0
0.201	J191F1
0.210	J191F2
0.217	J191F3
0.286	J191F4
0.209	J191F5
0.232	J191F6
0.204	J191F7
0.171	J191F8
0.251	J191F9

Number of samples		Uncensored values	
Uncensored	12	Mean	0.225
Censored		Lognormal mean	0.225
Detection limit or PQL		Std. devn.	0.0297
Method detection limit		Median	0.223
TOTAL	12	Min.	0.171
		Max.	0.286

Lognormal distribution? r-squared is: 0.961
Normal distribution? r-squared is: 0.956
Recommendations:
Use lognormal distribution.

UCL (Land's method) is 0.241

Nickel 95% UCL Calculation

DATA	ID
8.63	J191D8/ J191H0
10.7	J191D9
11.7	J191F0
9.05	J191F1
9.66	J191F2
9.44	J191F3
9.37	J191F4
9.81	J191F5
9.80	J191F6
8.49	J191F7
9.99	J191F8
11.9	J191F9

Number of samples		Uncensored values	
Uncensored	12	Mean	9.88
Censored		Lognormal mean	9.88
Detection limit or PQL		Std. devn.	1.08
Method detection limit		Median	9.73
TOTAL	12	Min.	8.49
		Max.	11.9

Lognormal distribution? r-squared is: 0.939
Normal distribution? r-squared is: 0.919
Recommendations:
Use lognormal distribution.

UCL (Land's method) is 10.5

Vanadium 95% UCL Calculation

DATA	ID
37.4	J191D8/ J191H0
42.3	J191D9
44.9	J191F0
39.0	J191F1
27.1	J191F2
41.2	J191F3
42.0	J191F4
26.8	J191F5
41.3	J191F6
36.4	J191F7
37.0	J191F8
49.0	J191F9

Number of samples		Uncensored values	
Uncensored	12	Mean	38.7
Censored		Lognormal mean	38.8
Detection limit or PQL		Std. devn.	6.52
Method detection limit		Median	40.1
TOTAL	12	Min.	26.8
		Max.	49.0

Lognormal distribution? r-squared is: 0.867
Normal distribution? r-squared is: 0.913
Recommendations:
Use normal distribution.

UCL (based on t-statistic) is 42.1

Zinc 95% UCL Calculation

DATA	ID
32.6	J191D8/ J191H0
35.1	J191D9
40.2	J191F0
35.5	J191F1
27.2	J191F2
34.2	J191F3
35.2	J191F4
29.6	J191F5
36.7	J191F6
26.9	J191F7
29.9	J191F8
43.3	J191F9

Number of samples		Uncensored values	
Uncensored	12	Mean	33.9
Censored		Lognormal mean	33.9
Detection limit or PQL		Std. devn.	4.97
Method detection limit		Median	34.7
TOTAL	12	Min.	26.9
		Max.	43.3

Lognormal distribution? r-squared is: 0.967
Normal distribution? r-squared is: 0.963
Recommendations:
Use lognormal distribution.

UCL (Land's method) s 36.7

CALCULATION SHEET

Washington Closure Hanford

Originator J. D. Skoglie — Date 09/22/09 — Calc. No. 0100H-CA-V0111 — Rev. No. 1

100-D 100-D Field Remediation — Job No. 14655 — Checked H. M. Sulloway — Date 09/22/09

Subject 116-H-9 Seal Pit Crib Cleanup Verification 95% UCL Calculations — Sheet No. 11 of 11

Duplicate Analysis - 116-H-9 Shallow Zone

Sampling Area	Sample Number	Sample Date	Potassium-40			Radium-226			Radium-228			Thorium-228 GEA			Thorium-232 GEA			Uranium-233/234			Uranium-238			Aluminum		
			pCi/g	Q	MDA	pCi/g	Q	MDA	pCi/g	Q	MDA	pCi/g	Q	MDA	pCi/g	Q	MDA	pCi/g	Q	MDA	pCi/g	Q	MDA	mg/kg	Q	PQL
SZ-1	J191D8	7/16/09	14.1		0.387	0.432		0.068	0.683		0.146	0.604		0.048	0.683		0.146	0.426		0.155	0.588		0.155	6380		14.8
Duplicate of J191D8	J191H0	7/16/09	14.4		0.270	0.468		0.069	0.518		0.151	0.600		0.046	0.518		0.151	0.776		0.270	0.635		0.270	5860		16.5

Analysis:

		Potassium-40	Radium-226	Radium-228	Thorium-228 GEA	Thorium-232 GEA	Uranium-233/234	Uranium-238	Aluminum
	TDL	0.5	0.1	0.2	1	1	1	1	5
Duplicate Analysis	Both > PQL?	Yes (continue)	Yes (continue)	Yes (continue)	Yes (continue)	Yes (continue)	Yes (continue)	Yes (continue)	Yes (continue)
	Both >5xTDL?	Yes (calc RPD)	No-Stop (acceptable)	No-Stop (acceptable)	No-Stop (acceptable)	No-Stop (acceptable)	No-Stop (acceptable)	No-Stop (acceptable)	Yes (calc RPD)
	RPD	2.1%							8.5%
	Difference > 2 TDL?	Not applicable	No - acceptable	No - acceptable	No - acceptable	No - acceptable	No - acceptable	No - acceptable	Not applicable

Sampling Area	HEIS Number	Sample Date	Arsenic			Barium			Beryllium			Boron			Cadmium			Calcium			Chromium			Cobalt		
			mg/kg	Q	PQL	mg/kg	Q	PQL	mg/kg	Q	PQL	mg/kg	Q	PQL	mg/kg	Q	PQL	mg/kg	Q	PQL	mg/kg	Q	PQL	mg/kg	Q	PQL
SZ-1	J191D8	7/16/09	2.73		0.740	49.8		0.370	0.209		0.148	1.09	B	1.48	0.106	B	0.185	5830		14.8	9.16		0.740	5.16		2.22
Duplicate of J191D8	J191H0	7/16/09	2.38		0.824	44.0		0.412	0.200		0.165	0.824	B	1.65	0.0825	B	0.206	5820		16.5	8.70		0.824	4.97		2.47

Analysis:

		Arsenic	Barium	Beryllium	Boron	Cadmium	Calcium	Chromium	Cobalt
	TDL	1	0.5	0.2	2	0.2	100	0.2	2
Duplicate Analysis	Both > PQL?	Yes (continue)	Yes (continue)	Yes (continue)	No-Stop (acceptable)	No-Stop (acceptable)	Yes (continue)	Yes (continue)	Yes (continue)
	Both >5xTDL?	No-Stop (acceptable)	Yes (calc RPD)	No-Stop (acceptable)			Yes (calc RPD)	Yes (calc RPD)	No-Stop (acceptable)
	RPD		12.4%				0.2%	5.2%	
	Difference > 2 TDL?	No - acceptable	Not applicable	No - acceptable	No - acceptable	No - acceptable	Not applicable	Not applicable	No - acceptable

Sampling Area	HEIS Number	Sample Date	Copper			Hexavalent Chromium			Iron			Lead			Magnesium			Manganese			Mercury			Molybdenum		
			mg/kg	Q	PQL	mg/kg	Q	PQL	mg/kg	Q	PQL	mg/kg	Q	PQL	mg/kg	Q	PQL	mg/kg	Q	PQL	mg/kg	Q	PQL	mg/kg	Q	PQL
SZ-1	J191D8	7/16/09	13.6		1.48	0.14	B	0.20	15400		14.8	4.10		0.740	4140		3.70	252		0.740	0.0130	B	0.0238	0.231	B	0.740
Duplicate of J191D8	J191H0	7/16/09	12.5		1.65	0.20	U	0.20	15100		16.5	3.85		0.824	3870		4.12	232		0.824	0.0101	B	0.0238	0.235	B	0.824

Analysis:

		Copper	Hexavalent Chromium	Iron	Lead	Magnesium	Manganese	Mercury	Molybdenum
	TDL	1	0.5	5	0.5	75	5	0.2	2
Duplicate Analysis	Both > PQL?	Yes (continue)	No-Stop (acceptable)	Yes (continue)	Yes (continue)	Yes (continue)	Yes (continue)	No-Stop (acceptable)	No-Stop (acceptable)
	Both >5xTDL?	Yes (calc RPD)		Yes (calc RPD)	Yes (calc RPD)	Yes (calc RPD)	Yes (calc RPD)		
	RPD	8.4%		2.0%	6.3%	6.7%	8.3%		
	Difference > 2 TDL?	Not applicable	No - acceptable	Not applicable	Not applicable	Not applicable	Not applicable	No - acceptable	No - acceptable

Sampling Area	HEIS Number	Sample Date	Nickel			Potassium			Silicon			Sodium			Vanadium			Zinc		
			mg/kg	Q	PQL	mg/kg	Q	PQL	mg/kg	Q	PQL	mg/kg	Q	PQL	mg/kg	Q	PQL	mg/kg	Q	PQL
SZ-1	J191D8	7/16/09	8.86		1.85	930		74.0	789		4.44	169		37.0	38.4		0.740	33.5		2.22
Duplicate of J191D8	J191H0	7/16/09	8.40		2.06	798		82.4	621		4.94	135		41.2	36.4		0.824	31.7		2.47

Analysis:

		Nickel	Potassium	Silicon	Sodium	Vanadium	Zinc
	TDL	4	400	2	50	2.5	1
Duplicate Analysis	Both > PQL?	Yes (continue)	Yes (continue)	Yes (continue)	Yes (continue)	Yes (continue)	Yes (continue)
	Both >5xTDL?	No-Stop (acceptable)	No-Stop (acceptable)	Yes (calc RPD)	No-Stop (acceptable)	Yes (calc RPD)	Yes (calc RPD)
	RPD			23.8%		5.3%	5.5%
	Difference > 2 TDL?	No - acceptable	No - acceptable	Not applicable	No - acceptable	Not applicable	Not applicable

Attachment 1. 116-H-9 Verification Sample Results

Sample Location	HEIS Number	Sample Date	Americium-241 GEA			Barium-133			Carbon-14			Cesium-137			Cobalt-60			Europium-152		
			pCi/g	Q	MDA	pCi/g	Q	MDA	pCi/g	Q	MDA	pCi/g	Q	MDA	pCi/g	Q	MDA	pCi/g	Q	MDA
SZ-1	J191D8	7/16/09	0.266	U	0.266	0.034	U	0.034	-0.749	UJ	7.02	0.037	U	0.037	0.040	U	0.040	0.092	U	0.092
Duplicate of J191D8	J191H0	7/16/09	0.289	U	0.289	0.034	U	0.034	1.54	UJ	6.33	0.033	U	0.033	0.035	U	0.035	0.089	U	0.089
SZ-2	J191D9	7/16/09	0.0990	U	0.0990	0.020	U	0.020	0.389	UJ	6.68	0.019	U	0.019	0.018	U	0.018	0.059	U	0.059
SZ-3	J191F0	7/16/09	0.104	U	0.104	0.031	U	0.031	3.90	UJ	6.82	0.033	U	0.033	0.032	U	0.032	0.085	U	0.085
SZ-4	J191F1	7/16/09	0.164	U	0.164	0.030	U	0.030	-3.56	UJ	6.56	0.027	U	0.027	0.027	U	0.027	0.071	U	0.071
SZ-5	J191F2	7/16/09	0.0770	U	0.0770	0.099	U	0.099	2.22	UJ	6.19	0.080	U	0.080	0.089	U	0.089	0.207	U	0.207
SZ-6	J191F3	7/16/09	0.0480	U	0.0480	0.041	U	0.041	1.02	UJ	6.18	0.040	U	0.040	0.048	U	0.048	0.104	U	0.104
SZ-7	J191F4	7/16/09	0.376	U	0.376	0.044	U	0.044	1.28	UJ	6.27	0.055	U	0.055	0.051	U	0.051	0.114	U	0.114
SZ-8	J191F5	7/16/09	0.139	U	0.139	0.055	U	0.055	1.88	UJ	6.92	0.037	U	0.037	0.049	U	0.049	0.115	U	0.115
SZ-9	J191F6	7/16/09	0.142	U	0.142	0.041	U	0.041	3.70	UJ	6.24	0.038	U	0.038	0.039	U	0.039	0.102	U	0.102
SZ-10	J191F7	7/16/09	0.157	U	0.157	0.025	U	0.025	1.77	UJ	6.74	0.024	U	0.024	0.025	U	0.025	0.065	U	0.065
SZ-11	J191F8	7/16/09	0.0460	U	0.0460	0.034	U	0.034	-2.14	UJ	6.47	0.034	U	0.034	0.036	U	0.036	0.082	U	0.082
SZ-12	J191F9	7/16/09	0.0420	U	0.0420	0.027	U	0.027	-0.332	UJ	6.84	0.027	U	0.027	0.028	U	0.028	0.069	U	0.069

Sample Location	HEIS Number	Sample Date	Europium-154			Europium-155			Nickel-63			Plutonium-238			Plutonium-239/240			Potassium-40		
			pCi/g	Q	MDA	pCi/g	Q	MDA	pCi/g	Q	MDA	pCi/g	Q	MDA	pCi/g	Q	MDA	pCi/g	Q	MDA
SZ-1	J191D8	7/16/09	0.143	U	0.143	0.109	U	0.109	0.854	U	3.30	0.081	U	0.207	0.027	U	0.207	14.1		0.387
Duplicate of J191D8	J191H0	7/16/09	0.123	U	0.123	0.099	U	0.099	0.345	U	4.18	0.017	U	0.160	0	U	0.128	14.4		0.270
SZ-2	J191D9	7/16/09	0.061	U	0.061	0.082	U	0.082	-0.810	U	3.44	0.026	U	0.197	-0.026	U	0.197	14.3		0.191
SZ-3	J191F0	7/16/09	0.111	U	0.111	0.080	U	0.080	-1.38	U	4.67	0	U	0.229	0	U	0.183	14.2		0.244
SZ-4	J191F1	7/16/09	0.086	U	0.086	0.117	U	0.117	0.271	U	3.84	0	U	0.294	0	U	0.235	14.8		0.268
SZ-5	J191F2	7/16/09	0.270	U	0.270	0.166	U	0.166	-0.217	U	3.69	0.002	U	0.030	0.002	U	0.019	10.5		1.00
SZ-6	J191F3	7/16/09	0.129	U	0.129	0.092	U	0.092	1.09	U	4.85	0.027		0.025	0.003	U	0.023	8.76		0.322
SZ-7	J191F4	7/16/09	0.162	U	0.162	0.131	U	0.131	-0.420	U	3.57	-0.005	U	0.035	-0.001	U	0.014	14.8		0.438
SZ-8	J191F5	7/16/09	0.151	U	0.151	0.124	U	0.124	0.480	U	3.70	0	U	0.035	0.008	U	0.015	11.2		0.356
SZ-9	J191F6	7/16/09	0.144	U	0.144	0.114	U	0.114	-0.355	U	3.35	0.030	U	0.233	0.030	U	0.233	14.0		0.401
SZ-10	J191F7	7/16/09	0.080	U	0.080	0.082	U	0.082	0.835	U	3.38	0	U	0.253	-0.033	U	0.253	14.2		0.210
SZ-11	J191F8	7/16/09	0.123	U	0.123	0.083	U	0.083	0.353	U	3.75	0	U	0.250	0.026	U	0.200	14.9		0.407
SZ-12	J191F9	7/16/09	0.090	U	0.090	0.106	U	0.106	-1.10	U	3.89	0	U	0.255	0.033	U	0.254	14.5		0.276

Attachment	1	Sheet No.	1 of 5
Originator	J. D. Skoglie	Date	9/21/09
Checked	H. M. Sulloway	Date	9/21/09
Calc. No.	0100H-CA-V0111	Rev. No.	1

Acronyms and notes apply to all of the tables in this attachment.
Note: Data qualified with B, C, and/or J are considered acceptable values.
B = blank contamination (inorganic constituents)
C = analyte detected in sample and QC blank and sample concentration was </=5 times blank
HEIS = Hanford Environmental Information System
J = estimate
L = dilution indicating physical and chemical interference are present
M = Sample duplicate precision not met
N = MS/MSD recovery is outside control limits
PQL = practical quantitation limit
Q = qualifier
R = rejected
U = undetected
X = more than 40% difference between primary and confirmation detector results and lower value is reported.

Attachment 1. 116-H-9 Verification Sample Results

Sample Location	HEIS Number	Sample Date	Radium-226			Radium-228			Silver-108 metastable			Thorium-228 GEA			Thorium-232 GEA			Total beta radiostrontium		
			pCi/g	Q	MDA	pCi/g	Q	MDA	pCi/g	Q	MDA	pCi/g	Q	MDA	pCi/g	Q	MDA	pCi/g	Q	MDA
SZ-1	J191D8	7/16/09	0.432		0.068	0.683		0.146	0.026	U	0.026	0.604		0.048	0.683		0.146	-0.057	U	0.250
Duplicate of J191D8	J191H0	7/16/09	0.468		0.069	0.518		0.151	0.023	U	0.023	0.600		0.046	0.518		0.151	0.055	U	0.208
SZ-2	J191D9	7/16/09	0.498		0.037	0.796		0.079	0.014	U	0.014	0.747		0.028	0.796		0.079	-0.024	U	0.205
SZ-3	J191F0	7/16/09	0.619		0.056	1.14		0.137	0.023	U	0.023	0.917		0.038	1.14		0.137	-0.021	U	0.243
SZ-4	J191F1	7/16/09	0.614		0.053	0.997		0.083	0.020	U	0.020	0.827		0.037	0.997		0.083	-0.023	U	0.222
SZ-5	J191F2	7/16/09	0.188		0.162	0.627		0.372	0.064	U	0.064	0.376		0.140	0.627		0.372	0.006	U	0.225
SZ-6	J191F3	7/16/09	0.254		0.092	0.475		0.222	0.029	U	0.029	0.448		0.065	0.475		0.222	-0.007	U	0.228
SZ-7	J191F4	7/16/09	0.550		0.082	0.800		0.158	0.031	U	0.031	0.784		0.058	0.800		0.158	-0.029	U	0.230
SZ-8	J191F5	7/16/09	0.279		0.095	0.458		0.133	0.034	U	0.034	0.524		0.090	0.458		0.133	-0.006	U	0.244
SZ-9	J191F6	7/16/09	0.560		0.076	0.814		0.170	0.028	U	0.028	0.777		0.050	0.814		0.170	0.006	U	0.222
SZ-10	J191F7	7/16/09	0.416		0.047	0.608		0.092	0.016	U	0.016	0.559		0.033	0.608		0.092	0.066	U	0.222
SZ-11	J191F8	7/16/09	0.534		0.064	0.741		0.139	0.025	U	0.025	0.720		0.042	0.741		0.139	-0.072	U	0.233
SZ-12	J191F9	7/16/09	0.632		0.049	1.03		0.108	0.019	U	0.019	0.968		0.035	1.03		0.108	-0.018	U	0.221

Sample Location	HEIS Number	Sample Date	Tritium			Uranium-233/234			Uranium-235			Uranium-235 GEA			Uranium-238			Uranium-238 GEA		
			pCi/g	Q	MDA	pCi/g	Q	MDA	pCi/g	Q	MDA	pCi/g	Q	MDA	pCi/g	Q	MDA	pCi/g	Q	MDA
SZ-1	J191D8	7/16/09	5.23	UJ	7.43	0.426		0.155	0.0250	U	0.188	0.217	U	0.217	0.588		0.155	4.71	U	4.71
Duplicate of J191D8	J191H0	7/16/09	2.12	UJ	6.16	0.776		0.270	0	U	0.327	0.194	U	0.194	0.635		0.270	3.90	U	3.90
SZ-2	J191D9	7/16/09	-0.783	UJ	6.51	0.654		0.156	0.025	U	0.189	0.151	U	0.151	0.880		0.156	2.41	U	2.41
SZ-3	J191F0	7/16/09	2.59	UJ	7.19	0.697		0.333	0.106	U	0.404	0.174	U	0.174	0.828		0.333	3.96	U	3.96
SZ-4	J191F1	7/16/09	3.19	UJ	6.40	0.607		0.232	0	U	0.281	0.178	U	0.178	0.395		0.232	2.96	U	2.96
SZ-5	J191F2	7/16/09	1.76	UJ	6.03	0.655		0.386	0.122	U	0.467	0.420	U	0.420	0.454		0.386	10.8	U	10.8
SZ-6	J191F3	7/16/09	0.527	UJ	6.14	0.522		0.285	0.135	U	0.345	0.177	U	0.177	0.373		0.285	5.81	U	5.81
SZ-7	J191F4	7/16/09	2.73	UJ	6.11	0.398		0.152	0.048	U	0.184	0.259	U	0.259	0.617		0.152	5.39	U	5.39
SZ-8	J191F5	7/16/09	3.31	UJ	7.14	0.527		0.288	0.182	U	0.348	0.256	U	0.256	0.602		0.288	5.46	U	5.46
SZ-9	J191F6	7/16/09	1.95	UJ	6.66	0.545		0.278	0.088	U	0.336	0.202	U	0.202	0.618		0.278	4.87	U	4.87
SZ-10	J191F7	7/16/09	0.225	UJ	6.55	0.344		0.293	0	U	0.354	0.151	U	0.151	0.574		0.293	2.78	U	2.78
SZ-11	J191F8	7/16/09	1.30	UJ	6.31	0.790		0.263	0.042	U	0.318	0.189	U	0.189	0.584		0.263	4.05	U	4.05
SZ-12	J191F9	7/16/09	3.22	UJ	6.69	0.643		0.289	0.046	U	0.350	0.157	U	0.157	0.794		0.289	3.16	U	3.16

Attachment	1	Sheet No.	2 of 5
Originator	J. D. Skoglie	Date	9/21/09
Checked	H. M. Sulloway	Date	9/21/09
Calc. No.	0100H-CA-V0111	Rev. No.	1

Attachment 1. 116-H-9 Seal Pit Crib Verification Sample Results

Sample Location	HEIS Number	Sample Date	Aluminum			Antimony			Arsenic			Barium			Beryllium			Boron		
			mg/kg	Q	PQL	mg/kg	Q	PQL	mg/kg	Q	PQL	mg/kg	Q	PQL	mg/kg	Q	PQL	mg/kg	Q	PQL
SZ-1	J191D8	7/16/09	6380		14.8	0.740	UJ	0.740	2.73		0.740	49.8		0.370	0.209		0.148	1.09	B	1.48
Duplicate of J191D8	J191H0	7/16/09	5860		16.5	0.308	J	0.824	2.38		0.824	44.0		0.412	0.200		0.165	0.824	B	1.65
SZ-2	J191D9	7/16/09	7320		18.0	0.389	J	0.900	3.75		0.900	60.9		0.450	0.241		0.180	1.34	B	1.80
SZ-3	J191F0	7/16/09	8940		13.2	0.437	J	0.660	3.86		0.660	79.2		0.330	0.347		0.132	1.46		1.32
SZ-4	J191F1	7/16/09	7180		13.1	0.241	J	0.656	3.43		0.656	66.4		0.328	0.248		0.131	1.39		1.31
SZ-5	J191F2	7/16/09	5330		16.8	0.352	J	0.839	2.59		0.839	44.9		0.420	0.189		0.168	0.579	B	1.68
SZ-6	J191F3	7/16/09	5720		14.8	0.343	J	0.742	3.51		0.742	50.5		0.371	0.187		0.148	0.926	B	1.48
SZ-7	J191F4	7/16/09	6390		18.3	0.379	J	0.915	3.46		0.915	49.9		0.457	0.224		0.183	0.909	B	1.83
SZ-8	J191F5	7/16/09	5930		13.3	0.663	UJ	0.663	2.86		0.663	44.0		0.332	0.215		0.133	0.827	B	1.33
SZ-9	J191F6	7/16/09	7400		16.1	0.514	J	0.805	3.41		0.805	64.6		0.402	0.255		0.160	1.02	B	1.61
SZ-10	J191F7	7/16/09	5150		15.8	0.788	UJ	0.788	2.47		0.788	37.6		0.394	0.170		0.158	0.585	B	1.58
SZ-11	J191F8	7/16/09	5850		16.0	0.328	J	0.798	2.62		0.798	58.9		0.399	0.191		0.160	1.01	B	1.60
SZ-12	J191F9	7/16/09	9750		20.1	0.534	J	1.01	4.26		1.01	94.3		0.503	0.354		0.201	1.52	B	2.01
Blank	J191H1	7/16/09	198		13.3	0.667	UJ	0.667	0.251	B	0.667	2.16		0.334	0.041	B	0.133	1.33	U	1.33

Sample Location	HEIS Number	Sample Date	Cadmium			Calcium			Chromium			Cobalt			Copper			Hexavalent Chromium		
			mg/kg	Q	PQL	mg/kg	Q	PQL	mg/kg	Q	PQL	mg/kg	Q	PQL	mg/kg	Q	PQL	mg/kg	Q	PQL
SZ-1	J191D8	7/16/09	0.106	B	0.185	5830		14.8	9.16		0.740	5.16		2.22	13.6		1.48	0.14	B	0.20
Duplicate of J191D8	J191H0	7/16/09	0.0825	B	0.206	5820		16.5	8.70		0.824	4.97		2.47	12.5		1.65	0.20	U	0.20
SZ-2	J191D9	7/16/09	0.0951	B	0.225	6360		18.0	11.7		0.900	6.10		2.70	13.2		1.80	0.20	U	0.20
SZ-3	J191F0	7/16/09	0.0950	B	0.165	4240		13.2	12.5		0.660	7.29		1.98	16.2		1.32	0.42		0.20
SZ-4	J191F1	7/16/09	0.0964	B	0.164	6880		13.1	10.8		0.656	5.91		1.97	12.4		1.31	0.22		0.20
SZ-5	J191F2	7/16/09	0.0714	B	0.210	6460		16.8	10.7		0.839	4.18		2.52	10.5		1.68	0.21	U	0.21
SZ-6	J191F3	7/16/09	0.0903	B	0.185	5030		14.8	13.1		0.742	5.35		2.23	12.4		1.48	0.21	U	0.21
SZ-7	J191F4	7/16/09	0.112	B	0.229	6290		18.3	10.4		0.915	5.54		2.74	12.7		1.83	0.20	U	0.20
SZ-8	J191F5	7/16/09	0.0972	B	0.166	7470		13.3	11.8		0.663	4.54		1.99	11.7		0.133	0.21	U	0.21
SZ-9	J191F6	7/16/09	0.0963	B	0.201	5030		16.1	11.1		0.805	6.16		2.41	13.3		0.161	0.16	B	0.21
SZ-10	J191F7	7/16/09	0.0629	B	0.197	5710		15.8	10.8		0.788	4.36		2.36	11.8		1.58	0.20	U	0.21
SZ-11	J191F8	7/16/09	0.0633	B	2.00	6130		16.0	9.59		0.798	5.02		2.39	11.9		1.60	0.20	UJ	0.20
SZ-12	J191F9	7/16/09	0.111	B	0.251	4770		20.1	13.4		1.01	7.75		3.02	15.3		2.01	0.25	UJ	0.25
Blank	J191H1	7/16/09	0.167	U	0.167	44.5		13.3	0.667	U	0.667	2.00	U	2.00	0.398	B	1.33			

Attachment	1	Sheet No.	3 of 5
Originator	J. D. Skoglie	Date	9/28/09
Checked	H. M. Salloway	Date	9/28/09
Calc. No.	0100H-CA-V0111	Rev. No.	1

Attachment 1. 116-H-9 Seal Pit Crib Verification Sample Results

Sample Location	HEIS Number	Sample Date	Iron			Lead			Magnesium			Manganese			Mercury			Molybdenum		
			mg/kg	Q	PQL	mg/kg	Q	PQL	mg/kg	Q	PQL	mg/kg	Q	PQL	mg/kg	Q	PQL	mg/kg	Q	PQL
SZ-1	J191D8	7/16/09	15400		14.8	4.10		0.740	4140		3.70	252		0.740	0.0131	B	0.0238	0.231	B	0.740
Duplicate of J191D8	J191H0	7/16/09	15100		16.5	3.85		0.824	3870		4.12	232		0.824	0.0101	B	0.0238	0.235	B	0.824
SZ-2	J191D9	7/16/09	17500		18.0	7.02		0.900	4350		4.50	287		0.900	0.00917	B	0.0275	0.228	B	0.900
SZ-3	J191F0	7/16/09	20400		13.2	6.25		0.660	4900		3.30	311		0.660	0.0182	B	0.0282	0.252	B	0.660
SZ-4	J191F1	7/16/09	17200		13.1	5.02		0.656	4220		3.28	267		0.656	0.0131	B	0.0303	0.201	B	0.656
SZ-5	J191F2	7/16/09	11900		16.8	3.75		0.839	3710		4.20	221		0.839	0.0170	B	0.0288	0.210	B	0.839
SZ-6	J191F3	7/16/09	16000		14.8	8.84		0.742	3770		3.71	236		0.742	0.00935	B	0.0267	0.217	B	0.742
SZ-7	J191F4	7/16/09	16600		18.3	7.89		0.915	3940		4.57	253		0.915	0.0145	B	0.0274	0.286	B	0.915
SZ-8	J191F5	7/16/09	12600		13.3	4.94		0.663	3940		3.30	246		0.663	0.0132	B	0.0300	0.209	B	0.663
SZ-9	J191F6	7/16/09	17800		16.1	5.52		0.805	4230		4.02	282		0.805	0.0151	B	0.0290	0.232	B	0.805
SZ-10	J191F7	7/16/09	14100		15.8	3.61		0.788	3550		3.94	212		0.788	0.0138	B	0.0303	0.204	B	0.788
SZ-11	J191F8	7/16/09	14600		16.0	4.19		0.798	3890		3.99	224		0.798	0.0114	B	0.0297	0.171	B	0.798
SZ-12	J191F9	7/16/09	22100		20.1	6.04		1.01	4990		5.03	351		1.01	0.0133	B	0.0295	0.251	B	1.01
Blank	J191H1	7/16/09	316		13.3	0.651	B	0.667	30.1		3.34	7.2		0.667	0.0281	U	0.0281	0.667	U	0.667

Sample Location	HEIS Number	Sample Date	Nickel			Potassium			Selenium			Silicon			Silver			Sodium		
			mg/kg	Q	PQL	mg/kg	Q	PQL	mg/kg	Q	PQL	mg/kg	Q	PQL	mg/kg	Q	PQL	mg/kg	Q	PQL
SZ-1	J191D8	7/16/09	8.86		1.85	930		74.0	0.740	U	0.740	789		4.44	0.740	U	0.740	169		37.0
Duplicate of J191D8	J191H0	7/16/09	8.40		2.06	798		82.4	0.824	U	0.824	621		4.94	0.824	U	0.824	135		41.2
SZ-2	J191D9	7/16/09	10.7		2.25	1290		90.0	0.900	U	0.900	1110		5.40	0.900	U	0.900	171		45.0
SZ-3	J191F0	7/16/09	11.7		1.65	1600		66.0	0.660	U	0.660	1300		3.96	0.660	U	0.660	174		33.0
SZ-4	J191F1	7/16/09	9.05		1.64	1330		65.6	0.656	U	0.656	1140		3.94	0.656	U	0.656	167		32.8
SZ-5	J191F2	7/16/09	9.66		2.10	800		83.9	0.839	U	0.938	538		5.04	0.839	U	0.839	130		42.0
SZ-6	J191F3	7/16/09	9.44		1.85	951		74.2	0.742	U	0.742	1180		4.45	0.742	U	0.742	163		37.1
SZ-7	J191F4	7/16/09	9.37		2.29	990		91.5	0.915	U	0.915	845		5.45	0.915	U	0.915	187		45.7
SZ-8	J191F5	7/16/09	9.81		1.66	956		66.3	0.663	U	0.663	771		3.98	0.663	U	0.663	148		32.2
SZ-9	J191F6	7/16/09	9.80		2.01	1230		80.5	0.805	U	0.805	718		4.82	0.805	U	0.805	150		40.2
SZ-10	J191F7	7/16/09	8.49		1.97	617		78.8	0.788	U	0.788	408		4.73	0.788	U	0.788	149		39.4
SZ-11	J191F8	7/16/09	9.99		2.00	848		79.8	0.798	U	0.798	768		4.79	0.798	U	0.798	147		39.9
SZ-12	J191F9	7/16/09	11.9		2.51	1930		101	1.01	U	1.01	1380		6.03	1.01	U	1.01	189		50.3
Blank	J191H1	7/16/09	1.67	U	1.67	29.5	B	66.7	0.262	B	0.667	195		4.00	0.667	U	0.667	33.4	U	33.4

Sample Location	HEIS Number	Sample Date	Vanadium			Zinc		
			mg/kg	Q	PQL	mg/kg	Q	PQL
SZ-1	J191D8	7/16/09	38.4		0.740	33.5		2.22
Duplicate of J191D8	J191H0	7/16/09	36.4		0.824	31.7		2.47
SZ-2	J191D9	7/16/09	42.3		0.900	35.1		2.70
SZ-3	J191F0	7/16/09	44.9		0.660	40.2		1.98
SZ-4	J191F1	7/16/09	39.0		0.656	35.5		1.97
SZ-5	J191F2	7/16/09	27.1		0.839	27.2		2.52
SZ-6	J191F3	7/16/09	41.2		0.742	34.2		2.23
SZ-7	J191F4	7/16/09	42.0		0.915	35.2		2.74
SZ-8	J191F5	7/16/09	26.8		0.663	29.6		1.99
SZ-9	J191F6	7/16/09	41.3		0.805	36.7		2.41
SZ-10	J191F7	7/16/09	36.4		0.788	26.9		2.36
SZ-11	J191F8	7/16/09	37.0		0.798	29.9		2.39
SZ-12	J191F9	7/16/09	49.0		1.01	43.3		3.02
Blank	J191H1	7/16/09	0.309	B	0.667	0.987	B	2.00

Attachment	1	Sheet No.	4 of 5
Originator	J. D. Skoglie	Date	9/22/09
Checked	H. M. Sulloway	Date	9/22/09
Calc. No.	0100H-CA-V0111	Rev. No.	1

Attachment 1. 116-H-9 Seal Pit Crib Verification Sample Results

CONSTITUENT	SZ-1 J191D8 - Sampled on 7/16/09			SZ-2 J191D9 - Sampled on 7/16/09			SZ-3 J191F0 - Sampled on 7/16/09			SZ-4 J191F1 - Sampled on 7/16/09			SZ-5 J191F2 - Sampled on 7/16/09			SZ-6 J191F3 - Sampled on 7/16/09		
	ug/kg	Q	PQL	ug/kg	Q	PQL	ug/kg	Q	PQL	ug/kg	Q	PQL	ug/kg	Q	PQL	ug/kg	Q	PQL
Aroclor-1016	13.4	U	13.4	13.4	U	13.4	13.3	U	13.3	13.4	U	13.4	14.1	U	14.1	14.2	U	14.2
Aroclor-1221	13.4	U	13.4	13.4	U	13.4	13.3	U	13.3	13.4	U	13.4	14.1	U	14.1	14.2	U	14.2
Aroclor-1232	13.4	U	13.4	13.4	U	13.4	13.3	U	13.3	13.4	U	13.4	14.1	U	14.1	14.2	U	14.2
Aroclor-1242	13.4	U	13.4	13.4	U	13.4	13.3	U	13.3	13.4	U	13.4	14.1	U	14.1	14.2	U	14.2
Aroclor-1248	13.4	U	13.4	13.4	U	13.4	13.3	U	13.3	13.4	U	13.4	14.1	U	14.1	14.2	U	14.2
Aroclor-1254	13.4	U	13.4	13.4	U	13.4	23.1		13.3	13.4	U	13.4	14.1	U	14.1	14.2	U	14.2
Aroclor-1260	13.4	U	13.4	13.4	U	13.4	9.56	J	13.3	13.4	U	13.4	14.1	U	14.1	14.2	U	14.2

CONSTITUENT	SZ-7 J191F4 - Sampled on 7/16/09			SZ-8 J191F5 - Sampled on 7/16/09			SZ-9 J191F6 - Sampled on 7/16/09			SZ-10 J191F7 - Sampled on 7/16/09			SZ-11 J191F8 - Sampled on 7/16/09			SZ-12 J191F9 - Sampled on 7/16/09		
	ug/kg	Q	PQL	ug/kg	Q	PQL	ug/kg	Q	PQL	ug/kg	Q	PQL	ug/kg	Q	PQL	ug/kg	Q	PQL
Aroclor-1016	13.4	U	13.4	13.8	U	13.8	13.7	U	13.7	13.4	U	13.4	13.6	U	13.6	16.6	U	16.6
Aroclor-1221	13.4	U	13.4	13.8	U	13.8	13.7	U	13.7	13.4	U	13.4	13.6	U	13.6	16.6	U	16.6
Aroclor-1232	13.4	U	13.4	13.8	U	13.8	13.7	U	13.7	13.4	U	13.4	13.6	U	13.6	16.6	U	16.6
Aroclor-1242	13.4	U	13.4	13.8	U	13.8	13.7	U	13.7	13.4	U	13.4	13.6	U	13.6	16.6	U	16.6
Aroclor-1248	13.4	U	13.4	13.8	U	13.8	13.7	U	13.7	13.4	U	13.4	13.6	U	13.6	16.6	U	16.6
Aroclor-1254	13.4	U	13.4	13.8	U	13.8	13.7	U	13.7	13.4	U	13.4	13.6	U	13.6	16.6	U	16.6
Aroclor-1260	13.4	U	13.4	13.8	U	13.8	13.7	U	13.7	13.4	U	13.4	13.6	U	13.6	16.6	U	16.6

CONSTITUENT	Duplicate of J191D8, J191H0 - Sampled on 7/16/09		
	ug/kg	Q	PQL
Aroclor-1016	13.4	U	13.4
Aroclor-1221	13.4	U	13.4
Aroclor-1232	13.4	U	13.4
Aroclor-1242	13.4	U	13.4
Aroclor-1248	13.4	U	13.4
Aroclor-1254	13.4	U	13.4
Aroclor-1260	13.4	U	13.4

Attachment	1	Sheet No.	5 of 5
Originator	J. D. Skoglie	Date	9/22/09
Checked	H. M. Sulloway	Date	9/22/09
Calc. No.	0100H-CA-V0111	Rev. No.	1

Acrobat 8.0

CALCULATION COVER SHEET

Project Title: 100-H Field Remediation **Job No. 14655**

Area: 116-H-9

Discipline: Environmental *Calculation No: 0100H-CA-V0114

Subject: 116-H-9 Seal Pit Crib Direct Contact Hazard Quotient and Carcinogenic Risk Calculation

Computer Program: Excel Program No: Excel 2003

The attached calculations have been generated to document compliance with established cleanup levels. These calculations should be used in conjunction with other relevant documents in the administrative record.

Committed Calculation ☒ Preliminary ☐ Superseded ☐ Voided ☐

Rev.	Sheet Numbers	Originator	Checker	Reviewer	Approval	Date
0	Cover = 1 Sheets = 3 Total = 4	J. D. Skoglie	H. M. Sulloway	L. D. Habel	D. F. Obenauer	10/12/09

SUMMARY OF REVISION

WCH-DE-018 (05/08/2007) *Obtain Calc. No. from Document Control and Form from Intranet

Washington Closure Hanford, Inc. CALCULATION SHEET

Originator:	J. D. Skoglie	Date:	09/30/09	Calc. No.:	0100H-CA-V0114	Rev.:	0
Project:	100-H Area Field Remediation	Job No:	14655	Checked:	H. M. Sulloway	Date:	09/30/09
Subject:	116-H-9 Seal Pit Crib Direct Contact Hazard Quotient and Carcinogenic Risk Calculation					Sheet No.	1 of 3

PURPOSE:

Provide documentation to support the calculation of the direct contact hazard quotient (HQ) and excess carcinogenic risk for the 116-H-9 seal pit crib. In accordance with the remedial action goals (RAGs) in the remedial design report/remedial action work plan (RDR/RAWP) (DOE-RL 2005), the following criteria must be met:

1) An HQ of <1.0 for all individual noncarcinogens
2) A cumulative HQ of <1.0 for noncarcinogens
3) An excess cancer risk of $<1 \times 10^{-6}$ for individual carcinogens
4) A cumulative excess cancer risk of $<1 \times 10^{-5}$ for carcinogens.

GIVEN/REFERENCES:

1) DOE-RL, 2005, *Remedial Design Report/Remedial Action Work Plan for the 100 Areas,* DOE/RL-96-17, Rev. 5, U.S. Department of Energy, Richland Operations Office, Richland, Washington.

2) WAC 173-340, "Model Toxics Control Act – Cleanup," *Washington Administrative Code*, 1996.

3) WCH, 2009, *116-H-9 Seal Pit Crib Cleanup Verification 95% UCL Calculations*, (0100H-CA-V0111), Rev 0, Washington Closure Hanford, Inc., Richland, Washington.

SOLUTION:

1) Generate an HQ for each noncarcinogenic constituent detected above background or required detection limit/practical quantitation limit and compare it to the individual HQ of <1.0 (DOE-RL 2005).

2) Sum the HQs and compare this value to the cumulative HQ of <1.0.

3) Generate an excess cancer risk value for each carcinogenic constituent detected above background or required detection limit/practical quantitation limit and compare it to the excess cancer risk of $<1 \times 10^{-6}$ (DOE-RL 2005).

4) Sum the excess cancer risk value(s) and compare it to the cumulative cancer risk of $<1 \times 10^{-5}$.

Washington Closure Hanford, Inc. CALCULATION SHEET

Originator:	J. D. Skoglie	Date:	09/30/09	Calc. No.:	0100H-CA-V0114	Rev.:	0
Project:	100-H Area Field Remediation	Job No:	14655	Checked:	H. M. Sulloway	Date:	09/30/09
Subject:	116-H-9 Seal Pit Crib Direct Contact Hazard Quotient and Carcinogenic Risk Calculation					Sheet No.	2 of 3

METHODOLOGY:

The 116-H-9 seal pit crib consists of an excavation area for the purpose of verification sampling.

Direct contact hazard quotient and carcinogenic risk calculations for the 116-H-9 waste site were conservatively calculated for the entire waste site using the greater of the statistically determined values for each analyte from WCH (2009). Of the contaminants of potential concern (COPCs) for this site with established background levels, there were not any that were quantitated at a concentration above Hanford Site or Washington State background. Aroclor 1254, aroclor 1260, boron and molybdenum require HQ and risk calculations because these analytes were detected and a Washington State or Hanford Site background value is not available. Hexavalent chromium was detected by laboratory analysis and cannot be attributed to natural occurrence. All other site nonradionuclide COPCs were not detected or were quantified below background levels. An example of the HQ and risk calculations is presented below:

1) For example, the maximum value for boron is 1.27 mg/kg, divided by the noncarcinogenic RAG value of 7,200 mg/kg (calculated in accordance with the noncarcinogenic toxics effects formula in WAC 173-340-740[3]), is 1.8×10^{-4}. Comparing this value, and all other individual values, to the requirement of <1.0, this criterion is met.

2) After the HQ calculation is completed for the appropriate analytes, the cumulative HQ can be obtained by summing the individual values. (To avoid errors due to intermediate rounding, the individual HQ values prior to rounding are used for this calculation.) The sum of the HQ values is 1.7×10^{-2}. Comparing this value to the requirement of <1.0, this criterion is met.

3) To calculate the excess cancer risk, the maximum or statistical value is divided by the carcinogenic RAG value, and then multiplied by 1×10^{-6}. For example, the maximum value for hexavalent chromium is 0.42 mg/kg; divided by 2.1 mg/kg, and multiplied as indicated, is 2.0×10^{-7}. Comparing this value to the requirement of $<1 \times 10^{-6}$, this criterion is met.

4) After these calculations are completed for the carcinogenic analytes, the cumulative excess cancer risk is obtained by summing the individual values. The sum of the excess cancer risk is 2.7×10^{-7}. Comparing this value to the requirement of $<1 \times 10^{-5}$, this criterion is met.

RESULTS:

1) List individual noncarcinogens and corresponding HQs >1.0: None
2) List the cumulative noncarcinogenic HQ >1.0: None
3) List individual carcinogens and corresponding excess cancer risk $>1 \times 10^{-6}$: None
4) List the cumulative excess cancer risk for carcinogens $>1 \times 10^{-5}$: None.

Table 1 shows the results of the calculations.

Washington Closure Hanford, Inc. CALCULATION SHEET

Originator:	J. D. Skoglie	Date:	09/30/09	Calc. No.:	0100H-CA-V0114	Rev.:	0
Project:	100-H Area Field Remediation	Job No:	14655	Checked:	H. M. Sulloway	Date:	09/30/09
Subject:	116-H-9 Seal Pit Crib Direct Contact Hazard Quotient and Carcinogenic Risk Calculation					Sheet No.	3 of 3

Table 1. Direct Contact Hazard Quotient and Excess Cancer Risk Results for the 116-H-9 Seal Pit Crib.

Contaminants of Concern[a]	Maximum or Statistical Value[a] (mg/kg)	Noncarcinogen RAG[b] (mg/kg)	Hazard Quotient	Carcinogen RAG[b] (mg/kg)	Carcinogen Risk
Metals					
Boron	1.27	7,200	1.8E-04	--	--
Hexavalent Chromium[c]	0.42	240	1.8E-03	2.1	2.0E-07
Molybdenum	0.241	400	6.0E-04	--	--
PCB's					
Aroclor 1254	0.0231	1.6	1.4E-02	0.5	4.6E-08
Aroclor 1260	0.00956	--	--	0.5	1.9E-08
Totals					
Cumulative Hazard Quotient:			1.7E-02		
Cumulative Excess Cancer Risk:					2.7E-07

Notes:
[a] = From WCH (2009).
[b] = Value obtained from the RDR/RAWP (DOE-RL 2005) or *Washington Administrative Code* (WAC) 173-340-740(3), Method B, 1996.
c = Value for the carcinogen RAG calculated based on the inhalation exposure pathway WAC 173-340-750(3), 1996.
-- = not applicable
RAG = remedial action goal

CONCLUSION:

This calculation demonstrates that the 116-H-9 Seal Pit Crib meets the requirements for the direct contact hazard quotient and excess carcinogenic risk as identified in the RDR/RAWP (DOE-RL 2005).

Acrobat 8.0

CALCULATION COVER SHEET

Project Title: 100-H Area Field Remediation **Job No. 14655**

Area: 100-H

Discipline: Environmental *Calculation No: 0100H-CA-V0116

Subject: 116-H-9 Seal Pit Crib Hazard Quotient and Carcinogenic Risk Calculation for Protection of Groundwater

Computer Program: Excel Program No: Excel 2003

The attached calculations have been generated to document compliance with established cleanup levels. These calculations should be used in conjunction with other relevant documents in the administrative record.

Committed Calculation ☒ Preliminary ☐ Superseded ☐ Voided ☐

Rev.	Sheet Numbers	Originator	Checker	Reviewer	Approval	Date
0	Cover = 1 Sheets = 3 Total = 4	J. D. Skoglie	H. M. Sullaway	B. L. Vedder	D. F. Obenauer	10/21/09

SUMMARY OF REVISION

WCH-DE-018 (05/08/2007) *Obtain Calc. No. from Document Control and Form from Intranet

Washington Closure Hanford, Inc. CALCULATION SHEET

Originator:	J. D. Skoglie	Date:	10/21/09	Calc. No.:	0100H-CA-V0116	Rev.:	0
Project:	100-H Field Remediation	Job No:	14655	Checked:	H. M. Sulloway	Date:	10/21/09
Subject:	116-H-9 Seal Pit Crib Hazard Quotient and Carcinogenic Risk Calculation for Protection of Groundwater					Sheet No. 1 of 3	

PURPOSE:

Provide documentation to support the calculation of the hazard quotient (HQ) and excess carcinogenic risk associated with soil contaminant levels compared to soil cleanup levels for protection of groundwater for the 116-H-9 waste site. In accordance with the remedial action goals (RAGs) in the remedial design report/remedial action work plan (RDR/RAWP) (DOE-RL 2005), the following criteria must be met:

1) An HQ of <1.0 for all individual noncarcinogens
2) A cumulative HQ of <1.0 for noncarcinogens
3) An excess cancer risk of $<1 \times 10^{-6}$ for individual carcinogens
4) A cumulative excess cancer risk of $<1 \times 10^{-5}$ for carcinogens.

GIVEN/REFERENCES:

1) BHI, 2005, *100 Area Analogous Sites RESRAD Evaluation*, Calculation No. 0100X-CA-V0050 Rev 0, Bechtel Hanford, Inc., Richland, Washington.

2) DOE-RL, 2005, *Remedial Design Report/Remedial Action Work Plan for the 100 Areas,* DOE/RL-96-17, Rev. 5, U.S. Department of Energy, Richland Operations Office, Richland, Washington.

3) WAC 173-340, "Model Toxics Control Act – Cleanup," *Washington Administrative Code*, 1996.

4) WAC 173-340-740(3)(a)(ii)(A), "Groundwater Protection."

5) WCH, 2009, *116-H-9 Seal Pit Crib Cleanup Verification 95% UCL Calculations*, 0100H-CA-V0111, Rev 0, Washington Closure Hanford, Inc., Richland, Washington.

SOLUTION:

1) Generate a HQ for each noncarcinogenic constituent detected above background in soil and with a K_d less than that required to show no migration to groundwater in 1,000 years using the RESRAD generic site model (BHI 2005).

2) Sum the HQs and compare this value to the cumulative HQ of <1.0.

3) Generate an excess cancer risk value for each carcinogenic constituent detected above background in soil and with a K_d less than that required to show no migration to groundwater in 1,000 years using the RESRAD generic site model (BHI 2005).

4) Sum the excess cancer risk value(s) and compare it to the cumulative cancer risk of $<1 \times 10^{-5}$.

Washington Closure Hanford, Inc. CALCULATION SHEET

Originator:	J. D. Skoglie	Date:	10/21/09	Calc. No.:	0100H-CA-V0116	Rev.:	0
Project:	100-H Field Remediation	Job No:	14655	Checked:	H. M. Sulloway	Date:	10/21/09
Subject:	116-H-9 Seal Pit Crib Hazard Quotient and Carcinogenic Risk Calculation for Protection of Groundwater					Sheet No. 2 of 3	

METHODOLOGY:

The 116-H-9 waste site consisted of an excavation area for the purpose of verification sampling.

Hazard quotient and carcinogenic risk calculations for potential impact to groundwater at the 116-H-9 site were conservatively calculated for the entire waste site using the greater of the statistical or maximum value for each analyte from WCH (2009). Of the contaminants of potential concern (COPCs) for this site, boron and hexavalent chromium are included because they do not have a Hanford Site-specific or Washington State background value available and their respective distribution coefficient is less than that necessary to show no migration to groundwater in 1,000 years using the generic site RESRAD model (BHI 2005). Based on this model and a vadose zone of approximately 7 m (23 ft) thickness, a K_d of 10 or greater is required to show no predicted migration to groundwater in 1,000 years using the generic site model. All other site nonradionuclide COPCs were not detected, quantified below background levels, or have a K_d greater than 10. An example of the HQ and risk calculations for soil constituents with a potential impact to groundwater is presented below:

1) The hazard quotient is defined as the ratio of the dose of a substance obtained over a specified time (mg/kg/day) to a reference dose for the same substance derived over the same specified time (mg/kg/day). The hazard quotient can also be calculated as the ratio of the concentration in soil (maximum or statistical value) (mg/kg) to the soil RAG (mg/kg) for protection of groundwater, where the RAG is the groundwater cleanup level (µg/L) (calculated with, and related to the hazard quotient through, WAC 173-340-720(3)(a)(ii)(A), 1996) x 100 x 1 mg/1000 µg (conversion factor). This is based on the "100 times rule" of WAC 173-340-740(3)(a)(ii)(A) (1996). For example, the maximum soil value for boron of 1.27 mg/kg, divided by the noncarcinogenic RAG value of 320 mg/kg, is 4.0×10^{-3}. Comparing this value, and all other individual values, to the requirement of <1.0, this criterion is met.

2) After the HQ calculation is completed for the appropriate analytes, the cumulative HQ can be obtained by summing the individual values. (To avoid errors due to intermediate rounding, the individual HQ values prior to rounding are used for this calculation.) The sum of the HQ values is 9.1×10^{-2}. Comparing this value to the requirement of <1.0, this criterion is met.

3) No carcinogenic constituents met the criteria for evaluation at the 116-H-9 waste site; therefore, no calculations of excess carcinogenic risk were performed.

4) WAC 173-340-740(3)(a)(ii)(A) (1996) provides the "100 times rule" but also states "unless it can be demonstrated that a higher soil concentration is protective of ground water at the site." When the "100 times rule" values are exceeded, RESRAD was used to demonstrate that higher soil concentrations may be protective of groundwater."

RESULTS:

1) List individual noncarcinogens and corresponding HQs >1.0: None
2) List the cumulative noncarcinogenic HQ >1.0: None
3) List individual carcinogens and corresponding excess cancer risk $>1 \times 10^{-6}$: None

Washington Closure Hanford, Inc. CALCULATION SHEET

Originator:	J. D. Skoglie	Date:	10/21/09	Calc. No.:	0100H-CA-V0116	Rev.:	0
Project:	100-H Field Remediation	Job No:	14655	Checked:	H. M. Sulloway	Date:	10/21/09
Subject:	116-H-9 Seal Pit Crib Hazard Quotient and Carcinogenic Risk Calculation for Protection of Groundwater					Sheet No. 3 of 3	

4) List the cumulative excess cancer risk for carcinogens >1 x 10^{-5}: None.

Table 1 shows the results of the calculations.

Table 1. Hazard Quotient and Excess Cancer Risk Results for the 116-H-9 Waste Site.

Contaminants of Potential Concern	Statistical or Maximum Value[a] (mg/kg)	Noncarcinogen RAG[b] (mg/kg)	Hazard Quotient	Carcinogen RAG[b] (mg/kg)	Carcinogen Risk
Metals					
Boron	1.27	320	4.0E-03	--	--
Chromium, hexavalent	0.42	4.8	8.8E-02	--	--
Totals					
Cumulative Hazard Quotient:			**9.1E-02**		
Cumulative Excess Cancer Risk:					**0.0E+00**

Notes:

[a] = From WCH (2009).

[b] = Value obtained from the Cleanup Levels and Risk Calculations (CLARC) database using Groundwater, Method B, results and "100 times" model unless otherwise noted.

-- = not applicable

CONCLUSION:

This calculation demonstrates that the 116-H-9 site meets the requirements for the hazard quotients and excess carcinogenic risk for protection of groundwater as identified in the RDR/RAWP (DOE-RL 2005).

APPENDIX B

ECOLOGICAL RISK COMPARISON TABLE

Comparison of Maximum or Statistical Contaminant Concentrations to Ecological Screening Level for the 116-H-9 Waste Site.[a]

Hazardous Substance		2001 WAC 173-340, Table 749-3			EPA Ecological Soil Screening Levels[b]				Maximum or Statistical Result
		Plants	Soil Biota	Wildlife	Plants	Soil Biota	Avian[c]	Mammalian[c]	
	Background	Metals (mg/kg)							
Antimony	5	5	--	--	--	78	--	0.27	0.431 (<BG)
Arsenic	6.5[d]	10	60	132	18	--	43	46	3.59 (<BG)
Barium	132	500	--	102	--	330	--	2,000	67.8 (<BG)
Beryllium	1.51	10	--	--	--	40	--	21	0.269 (<BG)
Boron	NA	0.5	--	--	--	--	--	--	1.27
Cadmium	0.81	4	20	14	32	140	0.77	0.36	0.0980 (<BG)
Chromium (total)	18.5	42	42	67	--	--	26	34	12.0 (<BG)
Chromium VI	NA	--	--	--	--	--	--	130	0.42
Cobalt	15.7	20	--	--	13	--	120	230	6.24 (<BG)
Copper	22	100	50	217	70	80	28	49	13.7 (<BG)
Lead	10.2	50	500	118	120	1,700	11	56	6.65 (<BG)
Manganese	512	1,100	--	1,500	220	450	4,300	4,000	283 (<BG)
Mercury, inorganic	0.33	0.3	0.1	5.5	--	--	--	--	0.0150 (<BG)
Molybdenum	NA	2	--	7	--	--	--	--	0.241
Nickel	19.1	30	200	980	38	280	210	130	10.5 (<BG)
Vanadium	85.1	2	--	--	--	--	7.8	280	42.1 (<BG)
Zinc	67.8	86	200	360	160	120	46	79	36.7 (<BG)
PCBs (total)	NA	40	--	0.65	--	--	--	--	0.0327

Highlighted values are the lowest ecological screening levels for individual hazardous substances.

[a] Exceedance of screening values does not necessarily indicate the existence of risk to ecological receptors. All exceedances must be evaluated in the context of additional lines of evidence for ecological effects following a baseline risk assessment for the river corridor portion of the Hanford Site, which will include a more complete quantitative ecological risk assessment.

[b] Available on the internet at <www.epa.gov/ecotox/ecossl>.

[c] Wildlife.

[d] The Hanford Site background for arsenic is 6.5 mg/kg. An arsenic cleanup level of 20 mg/kg has been agreed to by the Tri-Party Agreement project managers as discussed in Section 2.1.2.1 of the *Remedial Design Report/Remedial Action Work Plan for the Area*, 2005, DOE/RL-96-17, Rev. 6.

-- = no value exists
BG = background
EPA = U.S. Environmental Protection Agency
NA = not available
PCB = polychlorinated biphenyl
RDR/RAWP = Remedial Design Report/Remedial Action Work Plan
WAC = *Washington Administrative Code*

APPENDIX C

DATA QUALITY ASSESSMENT

APPENDIX C

DATA QUALITY ASSESSMENT

VERIFICATION SAMPLING

A data quality assessment (DQA) was performed to compare the verification sampling approach and resulting analytical data with the sampling and data requirements specified in the site-specific sample design for the 116-H-9 waste site (WCH 2009b). This DQA was performed in accordance with site specific data quality objectives found in the *100 Area Remedial Action Sampling and Analysis Plan* (SAP) (DOE-RL 2009).

A review of the sample design (WCH 2009b), the field logbook (WCH 2009a), and applicable analytical data packages has been performed as part of this DQA. All samples were collected and analyzed per the sample design. In addition, nickel-63 analysis was requested on the chain of custody for the samples collected, though nickel-63 analysis is not required per the sample design (WCH 2009b). Therefore, nickel-63 results for the 116-H-9 waste site were not evaluated as part of this DQA.

To ensure quality data, the SAP data assurance requirements and the data validation procedures for chemical analysis and radiochemical analysis (BHI 2000a, 2000b) are used as appropriate. This review involves evaluation of the data to determine if they are of the right type, quality, and quantity to support the intended use (i.e., closeout decisions). The DQA completes the data life cycle (i.e., planning, implementation, and assessment) that was initiated by the data quality objectives process (EPA 2006).

Verification sample data collected at the 116-H-9 waste site were provided by the laboratory in sample delivery group (SDG) K1704. SDG K1704 was submitted for third-party validation. No major deficiencies were found in the analytical data set. Minor deficiencies were identified in the analytical data set and are discussed below. If no comments are made about a specific analysis, it should be assumed that no deficiencies affecting the quality of the data were found.

SDG K1704

This SDG comprises 13 statistical soil samples (J191D8 through J191D9, J191F0 through J191F9, and J191H0) collected from the 116-H-9 excavation. A field duplicate pair (J191D8/J191H0) is included in this SDG. These samples were analyzed for inductively coupled plasma (ICP) metals, mercury, hexavalent chromium, polychlorinated biphenyls (PCBs), strontium-90, isotopic plutonium, isotopic uranium, tritium, carbon-14, and by gamma spectroscopy. In addition, one equipment blank (J191H1) was collected and analyzed for ICP metals and mercury. Minor deficiencies are as follows.

In the radionuclide analysis, all tritium and carbon-14 results were qualified as estimates and flagged "J" by third-party validation, due to the lack of a matrix spike (MS) analysis. Estimated data are usable for decision-making purposes.

In the ICP metals analysis, aluminum, antimony, iron, and silicon MS recoveries are out of project acceptance criteria. For most of these analytes, the spiking concentration was insignificant compared to the native concentration in the sample from which the MS was prepared. The deficiency in the MS is a reflection of the analytical variability of the native concentration rather than a measure of the recovery from the sample. Antimony did not have mismatched spike and native concentrations in the original MS. The original MS recovery for antimony was 49%. The antimony data for SDG K1704 were qualified as estimates and flagged "J" by third-party validation. Estimated data are usable for decision-making purposes.

In the hexavalent chromium analysis, third-party validation qualified the result for sample J191F9 as an estimate with a "J" flag because the sample container was broken in transit. Estimated data are usable for decision-making purposes.

FIELD QUALITY ASSURANCE/QUALITY CONTROL

Relative percent difference (RPD) evaluations of main sample(s) versus the laboratory duplicate(s) are routinely performed and reported by the laboratory. Any deficiencies in those calculations are reported by SDG in the previous sections.

Field quality assurance/quality control (QA/QC) measures are used to assess potential sources of error and cross contamination of samples that could bias results. Field QA/QC samples, listed in the field logbook (WCH 2009a), are the primary and duplicate sample pair (J191D8/J191H0) from the 116-H-9 excavation. The main and QA/QC sample results are presented in Appendix A.

Field duplicate samples are collected to provide a relative measure of the degree of local heterogeneity in the sampling medium, unlike laboratory duplicates that are used to evaluate precision in the analytical process. The field duplicates are evaluated by computing the RPD of the sample/duplicate pair(s) for each contaminant of potential concern. RPDs are not calculated for analytes that are not detected in both the main and duplicate sample at more than five times the target detection limit. RPDs of analytes detected at low concentrations (less than five times the detection limit) are not considered to be indicative of the analytical system performance. None of the RPDs calculated for the field duplicate are above the acceptance criteria (30%). The data are usable for decision-making purposes. The 95% upper confidence limit calculation brief in Appendix A provides details on duplicate pair evaluation and RPD calculation.

A secondary check of the data variability is used when one or both of the samples being evaluated (main and duplicate) is less than five times the target detection limit (TDL), including undetected analytes. In these cases, a control limit of ±2 times the TDL is used (Appendix A) to indicate that a visual check of the data is required by the reviewer. No sample results required

this check. A visual inspection of all of the data is also performed. No additional major or minor deficiencies are noted. The data are usable for decision-making purposes.

SUMMARY

Limited, random, or sample matrix-specific influenced batch QC issues such as those discussed above, are a potential for any analysis. The number and types seen in these data sets are within expectations for the matrix types and analyses performed. The DQA review of the 116-H-9 waste site verification sampling data found that the analytical results are accurate within the standard errors associated with the analytical methods, sampling, and sample handling. The DQA review for the 116-H-9 waste site concludes that the reviewed data are of the right type, quality, and quantity to support the intended use. The analytical data were found acceptable for decision-making purposes. The verification sample analytical data are stored in the Environmental Restoration project-specific database prior to being submitted for inclusion in the Hanford Environmental Information System database. The verification sample analytical data are also summarized in Appendix A.

REFERENCES

BHI, 2000a, *Data Validation Procedure for Chemical Analysis*, BHI-01435, Rev. 0, Bechtel Hanford, Inc., Richland, Washington.

BHI, 2000b, *Data Validation Procedure for Radiochemical Analysis*, BHI-01433, Rev. 0, Bechtel Hanford, Inc., Richland, Washington.

DOE-RL, 2009, *100 Area Remedial Action Sampling and Analysis Plan,* DOE/RL-96-22, Rev. 4, U.S. Department of Energy, Richland Operations Office, Richland, Washington.

EPA, 2006, *Guidance on Systematic Planning Using the Data Quality Objectives Process*, EPA QA/G-4, EPA/240/B-06/001, U.S. Environmental Protection Agency, Office of Environmental Information, Washington, D.C.

WCH, 2009a, *100H Field Remediation and Sampling*, Logbook EL-1627-2, pp. 88-89, Washington Closure Hanford, Richland, Washington.

WCH, 2009b, *Work Instruction for Verification Sampling of the 116-H-9, 117-H Seal Pit Crib,* 0100H-WI-G0021, Rev. 0, Washington Closure Hanford, Richland, Washington.