9513354.0002

START

0041440

WHC-EP-0457

100 Areas Hanford Past-Practice Site Cleanup and Restoration Conceptual Study

Environmental Engineering Group

Date Published
July 1992

PLEASE RETURN TO:
ENVIRONMENTAL DIVISION
RESOURCE CENTER

Prepared for the U.S. Department of Energy
Office of Environmental Restoration and
Waste Management

Westinghouse Hanford Company
P.O. Box 1970
Richland, Washington 99352

Hanford Operations and Engineering Contractor for the
U.S. Department of Energy under Contract DE-AC06-87RL10930

RECORD COPY

Approved for Public Release

THIS PAGE INTENTIONALLY
LEFT BLANK

9513354.0003

ate Received: 7/13/92	INFORMATION RELEASE REQUEST	Reference: WHC-CM-3-4

Complete for all Types of Release

Purpose

Speech or Presentation (Check only one suffix)
- [] Full Paper
- [] Summary
- [] Abstract
- [] Visual Aid
- [] Speakers Bureau
- [] Poster Session
- [] Videotape

- [] Reference
- [x] Technical Report
- [] Thesis or Dissertation
- [] Manual
- [] Brochure/Flier
- [] Software/Database
- [] Controlled Document
- [] Other

ID Number (include revision, volume, etc.): WHC-EP-0457

List attachments.

Date Release Required: 7/17/92

Title: 100 Areas Hanford Past-Practice Site Cleanup and Restoration Conceptual Study

Unclassified Category: UC-

Impact Level: 4

ew or novel (patentable) subject matter? [] No [] Yes
"Yes", has disclosure been submitted by WHC or other company?
] No [] Yes Disclosure No(s).

Information received from others in confidence, such as proprietary data, trade secrets, and/or inventions?
[] No [] Yes (Identify)

opyrights? [] No [] Yes
"Yes", has written permission been granted?
] No [] Yes (Attach Permission)

Trademarks?
[] No [X] Yes (Identify)

Complete for Speech or Presentation

itle of Conference or Meeting: NA

Group or Society Sponsoring: NA

ate(s) of Conference or Meeting: NA

City/State: NA

Will proceedings be published? [] Yes [] No
Will material be handed out? [] Yes [] No

itle of Journal: NA

CHECKLIST FOR SIGNATORIES

eview Required per WHC-CM-3-4	Yes	No	Reviewer - Signature Indicates Approval: Name (printed)	Signature	Date
sification/Unclassified Controlled clear Information	[]	[X]			
atent - General Counsel	[X]	[]	SW BERGLIN	SW Berglin	7/15/92
egal - General Counsel	[X]	[]	BD Williamson	BD Williamson	7/15/92
pplied Technology/Export Controlled nformation or International Program	[]	[X]			
VHC Program/Project	[]	[X]			
ommunications	[]	[X]			
L Program/Project	[]	[X]			
ublication Services	[X]	[]	M.S. Andrews	M.S. Andrews	7/27/92
ther Program/Project	[]	[X]			

nformation conforms to all applicable requirements. The above information is certified to be correct.

	Yes	No
eferences Available to Intended Audience	[X]	[]
ransmit to DOE-HQ/Office of Scientific nd Technical Information	[]	[X]

uthor/Requestor (Printed/Signature) Date
F. V. Roeck F.V. Roeck 7/8/92

ntended Audience
[] Internal [] Sponsor [X] External

isible Manager (Printed/Signature) Date
J. Lauterbach J. Lauterbach 7/8/92

INFORMATION RELEASE ADMINISTRATION APPROVAL STAMP

Stamp is required before release. Release is contingent upon resolution of mandatory comments.

APPROVED FOR RELEASE
OFFICIAL DOCUMENT
NS
Date 7/28/92

Date Cancelled | Date Disapproved

-7600-062 (08/91) WEF074

Part 1

THIS PAGE INTENTIONALLY
LEFT BLANK

ABBREVIATIONS, ACRONYMS, AND INITIALISMS

ALARA	as low as reasonably achievable
bft^3	bank cubic feet
byd^3	bank cubic yard
c/min	counts per minute
CY	calendar year
EPA	U.S. Environmental Protection Agency
FIDLER	field instrument for detecting low energy radiation
GC	gas chromatograph
GM	Geiger-Mueller
GPR	ground-penetrating radar
HEPA	high-efficiency particulate air
HPT	health physics technician
LPG	liquid propane gas
PID	photoionization detector
QA/QC	quality assurance/quality control
SVE	soil vapor extraction
TLD	thermoluminescent dosimeter
TRU	transuranic
VES	vapor extraction system
VOC	volatile organic compound
Westinghouse Hanford	Westinghouse Hanford Company
XRF	x-ray fluorescence

CONTENTS

1.0 DESCRIPTION OF OPTIONS 1-1

2.0 ASSUMPTIONS AND SCOPE 2-1
2.1 GENERAL APPROACH 2-1
2.2 SCOPE 2-2
2.3 GENERAL ASSUMPTIONS 2-3

3.0 ENGINEERED SYSTEM TO IMPLEMENT THE GENERAL USE OPTION 3-1
3.1 SITE INVESTIGATION SYSTEM 3-1
3.1.1 Field Instrument Screening 3-1
3.1.2 Sampling and Analysis 3-21
3.2 SITE RECOVERY SYSTEM 3-23
3.2.1 Site Containment System 3-23
3.2.2 Site Excavation System 3-32
3.2.3 Oversized Object Cutting System 3-39
3.2.4 Pipelines Under the River 3-44
3.3 ONSITE PROCESSING SYSTEM 3-48
3.3.1 Size Reduction/Segregation 3-48
3.3.2 Volume Reduction 3-49
3.3.3 Organics Removal 3-50
3.4 ONSITE WASTE TRANSPORTATION TO 200 AREA DISPOSAL FACILITY 3-52
3.4.1 Waste Packaging 3-52
3.4.2 Waste Transportation System 3-60
3.5 SAMPLING AND ANALYSIS FOR SITE CERTIFICATION 3-60
3.6 SITE RESTORATION 3-61

4.0 ENGINEERED SYSTEM TO IMPLEMENT THE INDUSTRIAL USE OPTION 4-1

5.0 OTHER SYSTEMS AND COMPONENTS CONSIDERED 5-1
5.1 RATIONALE FOR SELECTED SYSTEM 5-1
5.1.1 Soil Excavation 5-1
5.1.2 Conveying to Transport Containers or Overburden Stockpiles 5-3
5.1.3 Structure and Buried Waste Excavation and Demolition 5-4
5.1.4 Pipeline Excavation 5-6
5.1.5 Containment Structures 5-7
5.1.6 Dust Suppression 5-8
5.1.7 Field Measurement Systems 5-10
5.1.8 Waste Sorting/Segregation 5-11
5.1.9 Volume and Size Reduction 5-12
5.1.10 Organics Removal 5-12
5.1.11 Waste Transport to the 200 Areas 5-14
5.1.12 Site Restoration 5-16

6.0 DISCUSSION OF SELECTED SYSTEM 6-1
6.1 ADVANTAGES OF SELECTED SYSTEM 6-1
6.2 DISADVANTAGES OF SELECTED SYSTEM 6-2

CONTENTS (cont)

6.3 CONSIDERATION OF WORKER AND ENVIRONMENTAL SAFETY 6-3
6.3.1 System Considerations Relative to Worker Safety . . . 6-3
6.3.2 System Considerations Relative to Environmental Safety 6-4
6.4 CONSIDERATION OF WASTE VOLUME REDUCTION 6-5
6.5 CONSIDERATION OF SECONDARY WASTE MINIMIZATION 6-6
6.6 CONSIDERATION OF ALARA 6-6
6.7 CONSIDERATION OF ABILITY TO HANDLE VARIABILITY 6-7
6.7.1 Ability to Handle Variability in Waste Volume 6-8
6.7.2 Ability to Handle Variability in Waste Properties . . 6-9
6.7.3 Ability to Handle Variability in Constituents and Concentration 6-9
6.8 CONSIDERATION OF DECONTAMINATABILITY 6-10
6.9 TRANSPORTABILITY/MOBILITY 6-10
6.10 IMPLEMENTABILITY WITHOUT EXTENSIVE TECHNOLOGY DEVELOPMENT . . 6-11
6.10.1 Engineering Test Requirements: General Task Description 6-11
6.11 CONSIDERATION OF ABILITY OF SYSTEM TO CHARACTERIZE WASTE AS INTEGRAL PART OF OPERATING SYSTEM 6-12

7.0 PROPERTIES OF WASTE DELIVERED TO THE 200 AREAS 7-1
7.1 WASTE CHARACTERISTICS 7-1
7.1.1 Size 7-2
7.1.2 Contaminant Levels 7-3
7.2 WASTE VOLUMES 7-4
7.2.1 Waste Quantities 7-4
7.2.2 Container Quantities 7-4

8.0 EQUIPMENT AND WORKFORCE NEEDS 8-1
8.1 ASSUMPTIONS FOR DEVELOPING EQUIPMENT NEEDS 8-1
8.1.1 Demolition System 8-2
8.1.2 Excavation System 8-3
8.1.3 Transportation System 8-3
8.1.4 Container System 8-4
8.1.5 Sampling and Analysis 8-4
8.2 ASSUMPTIONS USED TO GENERATE WORKFORCE NEEDS 8-4
8.3 MAJOR COST DRIVERS 8-5
8.4 SCHEDULE 8-12

9.0 TECHNOLOGY DEVELOPMENT OPPORTUNITIES 9-1

10.0 SENSITIVITY OF SELECTED SYSTEM TO CHANGES IN ASSUMPTIONS 10-1
10.1 IMPACT ON SYSTEM IF WASTE VOLUME INCREASES BY TEN TIMES . . . 10-1
10.1.1 Impact on Excavation System if Waste Volume Increases by Ten Times 10-1
10.1.2 Impact on Demolition System if Waste Volume Increases by Ten Times 10-2
10.1.3 Impact On Transportation System if Waste Volume Increases by Ten Times 10-2

CONTENTS (cont)

10.2 IMPACT ON SYSTEM IF WASTE VOLUME DECREASES BY TEN TIMES . . . 10-3
10.2.1 Impact on Excavation System if Waste Volume Decreases by Ten Times 10-4
10.2.2 Impact on Demolition System if Waste Volume Decreases by Ten Times 10-4
10.2.3 Impact on Transportation System if Volume Decreases by Ten Times 10-5
10.3 IMPACT ON SYSTEM IF OPERATION TIME IS DECREASED TO TEN YEARS 10-5
10.3.1 Impact on Excavation System if Operating Time is Decreased to Ten Years 10-6
10.3.2 Impact on Demolition System if Operating Time is Decreased to Ten Years 10-6
10.3.3 Impact on Transportation System if Operating Time is Decreased to Ten Years 10-7
10.4 UNCERTAINTIES AND FAILURE MODES 10-7

11.0 REFERENCES 11-1

APPENDIXES

A WASTE DESCRIPTIONS AND VOLUME CALCULATION A-1

B ENGINEERED SYSTEM B-1

C MINUTES OF PANEL MEETING C-1

FIGURES:

3-1a Overall System Flow Diagram 3-3

3-1b Soil Excavation Flow Diagram 3-7

3-1c Structures, Buried Wastes, and Land Pipelines Flow Diagram 3-11

3-1d River Pipelines Flow Diagram 3-15

3-2 Conceptual Sketch of Bridge Truss Containment Structure on Crawler Tracks 3-25

3-3 Conceptual Sketch of Two Adjacent Containment Structures on Crawler Tracks 3-26

3-4 Containment Structure Ventilation System 3-29

3-5 Precontainment Overburden Excavation 3-33

3-6 Contamination Excavation Operations 3-36

3-7 Processor Attachments for Demolition Operations 3-40

3-8 Removal of Buried Steel Pipelines on Land 3-43

3-9 Pipeline and Sediment Removal: Scenario 2, Pipelines Under the River 3-47

3-10 Static Collectors for Soil Gas Surveys 3-51

3-11 In Situ Soil Venting for Removal of Volatile Organic Compounds 3-53

3-12 Soil Venting in Shipping Containers for Removal of Volatile Organic Compounds 3-54

3-13 Shipping Container 3-56

3-14 Gantry Crane Container Mover 3-58

3-15 Conlock Device for Container Securing on Rail Cars 3-59

7-1 Waste Volume Distribution, General Use Option 7-5

7-2 Waste Volume Distribution, Industrial Use Option 7-6

8-1 Schedule 8-13

TABLES:

3-1 Instrumentation Capabilities 3-19

7-1 Container Summary 7-7

8-1 Equipment and Direct Operating Workforce Requirements 8-6

8-2 Operations Support Workforce 8-11

9-1 Technology Development Recommendations 9-2

9-2 Engineering Development Required to Implement 100 Area Remedial System 9-3

1.0 DESCRIPTION OF OPTIONS

Two land use options for 100 Area remediation were defined in Section 5.1 of the *Hanford Past-Practice Site Cleanup and Restoration Conceptual Study* (WHC-EP-0456) (WHC 1992). The land use options are as follows.

- The General Use Option, which includes residential, commercial, agricultural, recreational, or any other unrestricted use where humans live and/or work on the land and consume food produced on the land. This option would also include use of the land as a wildlife refuge

- The Industrial Use Option, which is restricted to humans being occupationally employed in the area but not living on the land or consuming produce grown on the land.

Differences between the two options in requirements for remediation of contamination are manifested in the specific contaminant cleanup standards that have been defined for the study in Chapter 5.0 of the *Hanford Past-Practice Site Cleanup and Restoration Conceptual Study* (WHC-EP-0456) (WHC 1992). However, for 100 Area soil remediation under both of the land use options, the study assumes the following:

- A clear site will be left after remediation such that future land use is not restricted; i.e., all buildings and surface structures, all subsurface structures, buried wastes, and pipelines will be removed from the 100 Areas regardless of their level of contamination. Building removal, surface structure removal, and removal of certain ancillary systems (such as steam lines, power lines) associated with the buildings are assumed to be completed prior to implementation of this study. Removal of these structures is not part of the scope of this study, however, but is addressed by other studies

- All contaminated soil that exceeds cleanup levels for the specific use option will be removed

- The site will be restored after cleanup to a condition that is consistent with its future intended use and that is protective of the environment.

2.0 ASSUMPTIONS AND SCOPE

2.1 GENERAL APPROACH

The 100 Area study focuses on a low-technology, high-volume throughput approach. This includes the following:

- Soil and buried waste excavation
- Organics removal from soils and buried wastes
- Demolition of structures (e.g., retention basins)
- Segregation of soil by contamination level
- Object cutting and size reduction
- Conveying and containerizing wastes for transport
- Transporting wastes to the 200 Areas for disposal
- Site restoration.

The low-technology approach minimizes processing for treatment of wastes. The objective is to excavate rapidly, containerize wastes, and bulk transport wastes in an environmentally safe manner and at minimal unit cost. Limiting the generation of secondary wastes is also an important objective. The emphasis for the 100 Areas is on simplicity using currently available techniques, if at all possible, such as are practiced in the mining industry. Thus, the concept would exclude more complex (and expensive) processing schemes to wash soils, incinerate combustible burial ground wastes, and reduce object size other than necessary for transport. Such processing schemes would be evaluated in the "high technology approach" utilized in the 300 Area study, with a goal of comparing the technical and economic features of each approach.

Consistent with the low-technology and high-volume throughput approach, an objective of the engineered system will be to maximize the efficiency of handling the bulk of the material at the excavation site. Materials that present significant handling problems but that only constitute a small fraction of the total volume of material (e.g., intact drums) will be handled off-line and, if necessary, at centralized facilities. The centralized facilities will be located away from the excavation site so as not to inhibit excavation productivity.

For the contaminated soil medium, the difference between the general and industrial land use scenarios is reflected in the associated cleanup levels. Because the 100 Area study focuses on a low-technology approach with no chemical or radiological contamination treatment elements, the difference in the land-use scenarios will impact only the volume of soil that must be excavated.

2.2 SCOPE

A database listing of the waste sites included in the 100 Areas provides an estimate of the volume of contaminated soil located beneath each of the waste sites. A categorization scheme was developed to sort the waste sites according to the type of wastes and/or waste forms contained within the sites as follows:

- Those sites that contain buried solid waste
- Those sites that only contain contaminated soil
- Those sites that contain minor amounts of structures
- Those sites that contain significant aboveground or buried structures
- Pipelines under the river.

The categories were established in anticipation of selecting excavation and demolition alternatives; i.e., it is anticipated that equipment necessary to excavate buried solid waste may be different than equipment necessary to demolish large structures such as concrete or steel retention basins. Waste sites with similar waste form properties were categorized together; e.g., reverse wells and cribs. Table A.3-1, Appendix A, identifies the categories, the associated waste forms, and the types of waste sites included in each category. Table A.4-1, Appendix A, provides a listing of the waste sites, sorted by category.

The total volume of contaminated soil was increased by 10% to account for the estimating uncertainties in the database. Contaminated soil volume data are included in Table A.4-1, Appendix A, for the General Use Option. While specific calculations of soil volumes for land or river pipelines were not included, it was assumed for study purposes that these materials are covered in the 10% contingency. No additional volumes were added to account for contaminated soils associated with the pipelines.

One of the accompanying Macroengineering Study supporting documents (Field and Henkel 1990) provided the basis for the following assumptions that were used to calculate the total volume of waste materials. The results of the calculations are shown in Figure A.4-1, Appendix A.

- Seventy percent of the excavated waste volume is contaminated soil
- Ten percent of the excavated waste volume is buried waste
  - Forty percent of the buried waste is combustible
- Ten percent of the excavated waste volume is discrete metals
- Ten percent of the excavated waste volume is demolition wastes.

Note that these percentages are based on "bank" quantities; i.e., volumes within the soil. Once the materials are excavated, the volume increases according to a swell factor, which varies with the type of waste.

In addition to these assumptions, additional assumptions were made to arrive at further splits of waste types. A detailed discussion of these assumptions and the resulting calculation procedures are given in Appendix A.4. Appendix A.1 presents a summary of waste site information and characteristics, and Appendix A.2 discusses contaminants of concern.

2.3 GENERAL ASSUMPTIONS

General assumptions for the 100 Area approach are as follows.

- Wastes will be transported in bulk. Special transportation corridors will be established to transport wastes to the 200 Areas, a distance of 10 to 15 mi from the 100 Area sites. Specific U.S. Department of Transportation shipping requirements have not been considered in this study, although the transportation corridors will be engineered to provide adequate environmental protection

- Although the possibility of criticality is extremely remote, in addition to radiological contamination detection, field measurement systems must also be able to detect incipient criticality situations and provide warning for the need for evacuation and/or corrective action

- For both the General Use and Industrial Use Options, it is assumed that all wastes and structures will be removed from the site. No wastes, even clean demolition waste, will be left onsite. Removal of all wastes is assumed necessary so as to allow for unrestricted future land use

- Contaminated soil removal proceeds to a maximum depth of 33 ft below the bottom of the waste site. For some waste sites, the water table is less than 33 ft from the bottom of the waste site. In such cases, excavation would stop at the water table

- Containment structures will be utilized to prevent/minimize migration of fugitive dust to the environment from excavation or other solids handling operations

- The 200 Areas disposal facilities will require that delivered waste be segregated, at a minimum, according to its radiation level/transuranic (TRU) content; e.g., high-activity waste will be transported and disposed of separately from low-activity waste. High-activity waste is considered greater than 200 mrad/h or 100 nCi/g total alpha, and it must be handled remotely

- The study must address handling of special wastes such as intact drums containing volatile organic compounds (VOC). No land-banned VOCs (i.e., VOCs exceeding *Resource Conservation and Recovery Act of 1976* land disposal restrictions) will be shipped to the 200 Areas. Soils or other solid wastes containing concentrations of VOCs in excess of the criterion must be processed either prior to excavation or prior to shipment to the 200 Areas

- Organics other than volatiles (semivolatile or nonvolatile) will not require removal or separation from the wastes shipped to the 200 Areas disposal site

- Study objectives had been established initially to achieve an overall 80% volume reduction and maximum size limits (1 ft in any direction), if possible. However, although these remain to be desirable objectives, it is assumed that because the 100 Area study is following a low-technology, high-volume approach, achieving such a volume or size reduction is not consistent with a low-technology approach. Therefore, it is assumed that volume or size-reduction techniques would not be evaluated

- Because of the large scale of 100 Area excavation and soil removal, it is assumed that the land would not be totally reclaimed to original contours by backfilling with imported soil, but would be recontoured by grading surrounding soils into the excavations

- Revegetation of disturbed surfaces for erosion prevention is assumed.

Additional assumptions regarding details of waste characteristics and calculations of waste volumes are given in Chapter 7.0. Specific assumptions for developing equipment and workforce needs are given in Chapter 8.0.

3.0 ENGINEERED SYSTEM TO IMPLEMENT THE GENERAL USE OPTION

This chapter presents a summary description of the engineered system required to implement the General Use Option for the 100 Areas. The proposed systems represent the end result of an evaluation of numerous alternatives. To perform the evaluation, selection criteria and objectives were first established based on the low-technology approach for 100 Area remediation, lists of applicable alternatives were then generated and, finally, alternatives were selected that best met the criteria and objectives. The selection process and rationale for selection of each proposed alternative are documented in Chapter 5.0.

The overall block flow diagram of the selected remediation system for the 100 Areas is given in Figure 3-1a. More detailed block flow diagrams for the subsystems are given in Figures 3-1b through 3-1d. Each system identified on the diagrams is described in the following sections.

3.1 SITE INVESTIGATION SYSTEM

This section describes real-time characterization using field instrument screening techniques and using sampling combined with rapid turnaround analyses in mobile laboratories.

3.1.1 Field Instrument Screening

The site investigation system emphasizes real-time characterization of the individual operational units as excavation proceeds. Real-time characterization is defined here as direct measurement via instrumentation without the need to collect and prepare samples. The need to anticipate a broad range of contingencies relative to waste characteristics (e.g., wide variability in radioactivity levels and the need for criticality detection) presents a challenge to the specification of instrumentation systems.

The following general conclusions have been made regarding site characterization:

- Real-time characterization is possible for detection of alpha, beta, gamma, and neutron flux radiations, as well as VOCs
- Techniques for real-time characterization of heavy metal contamination and ionic species (e.g., nitrate) are not available, although acceptable analytical turnaround can be provided by a mobile laboratory.

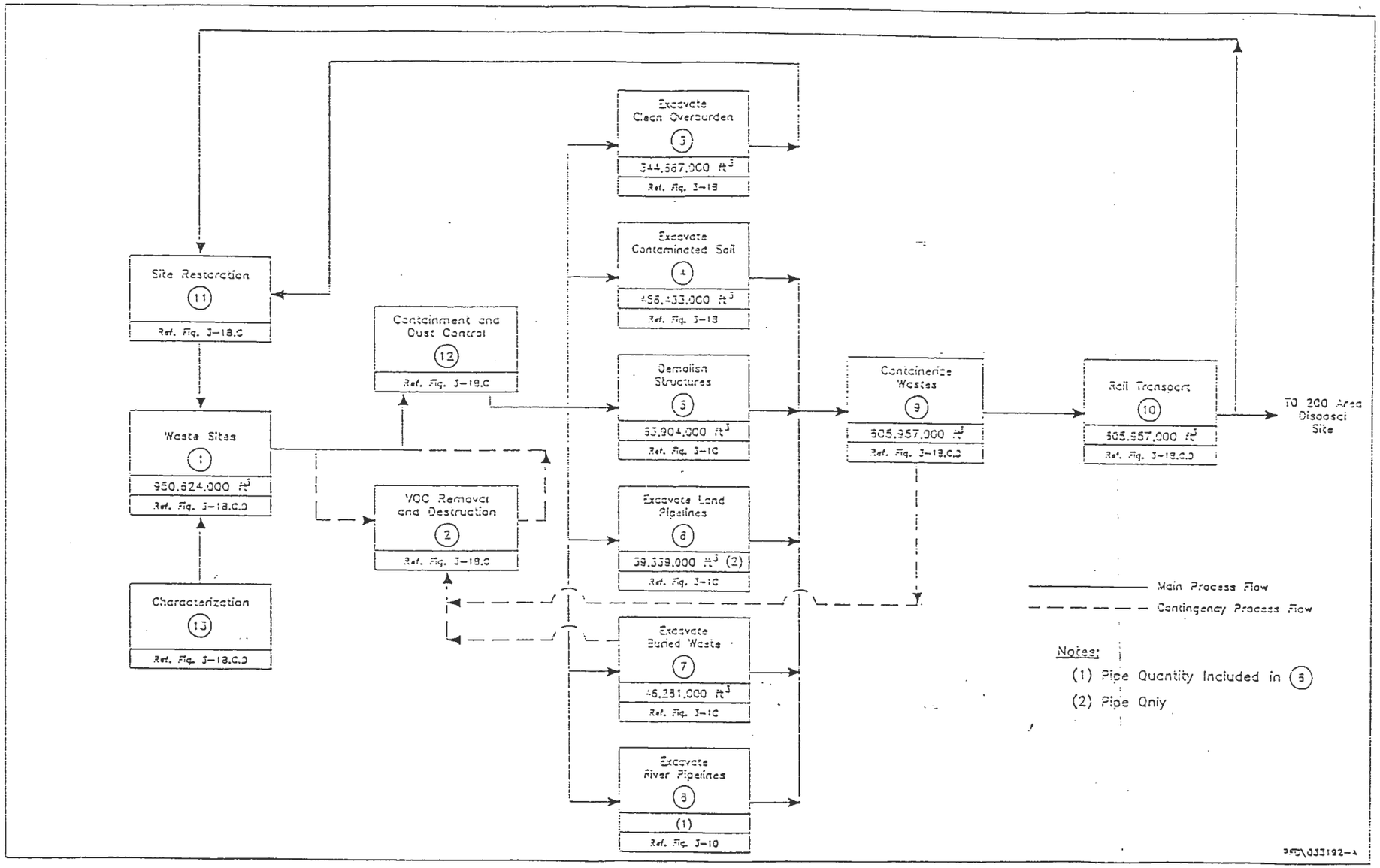

Figure 3-1a. Overall System Flow Diagram. (sheet 1 of 2)

THIS PAGE INTENTIONALLY
LEFT BLANK

Figure 3-1a. Overall System Flow Diagram. (sheet 2 of 2)

List of Processes		
Process number	Process name	Description
1	Waste Sites	Cribs, trenches, French drains, burial grounds, pipelines, structures, unplanned releases
2	Volatile Organic Compound Removal and Destruction	Soil gas sampling; in situ soil venting; VOC incineration
3	Excavate Clean Overburden	Loaders; trucks
4	Excavate Contaminated Soil	Loaders; backhoes; bulldozers; grizzlies; conveyors
5	Demolish Structures	Concrete crackers, shears, grapples; loaders
6	Excavate Land Pipelines	Backhoes; grapples, shears, grout truck
7	Excavate Buried Waste	Loaders; drum attachments
8	Excavate River Pipelines	Clamshell dredges; barges; cable cranes; underwater torches
9	Containerize Wastes	50-yd^3 boxes; overpacks; pipe racks; gantry cranes; portable bridge cranes
10	Rail Transport	Flatbed railcars, locomotives
11	Site Restoration	Soil backfill, recontouring, compaction; topsoil application; plant vegetation; irrigation
12	Containment & Dust Control	Containment structures and systems; water sprays, soil stabilizers, vacuum hoods
13	Characterization	Radiation/criticality detectors; portable GCs; sampling/mobile labs; sampling/fixed labs

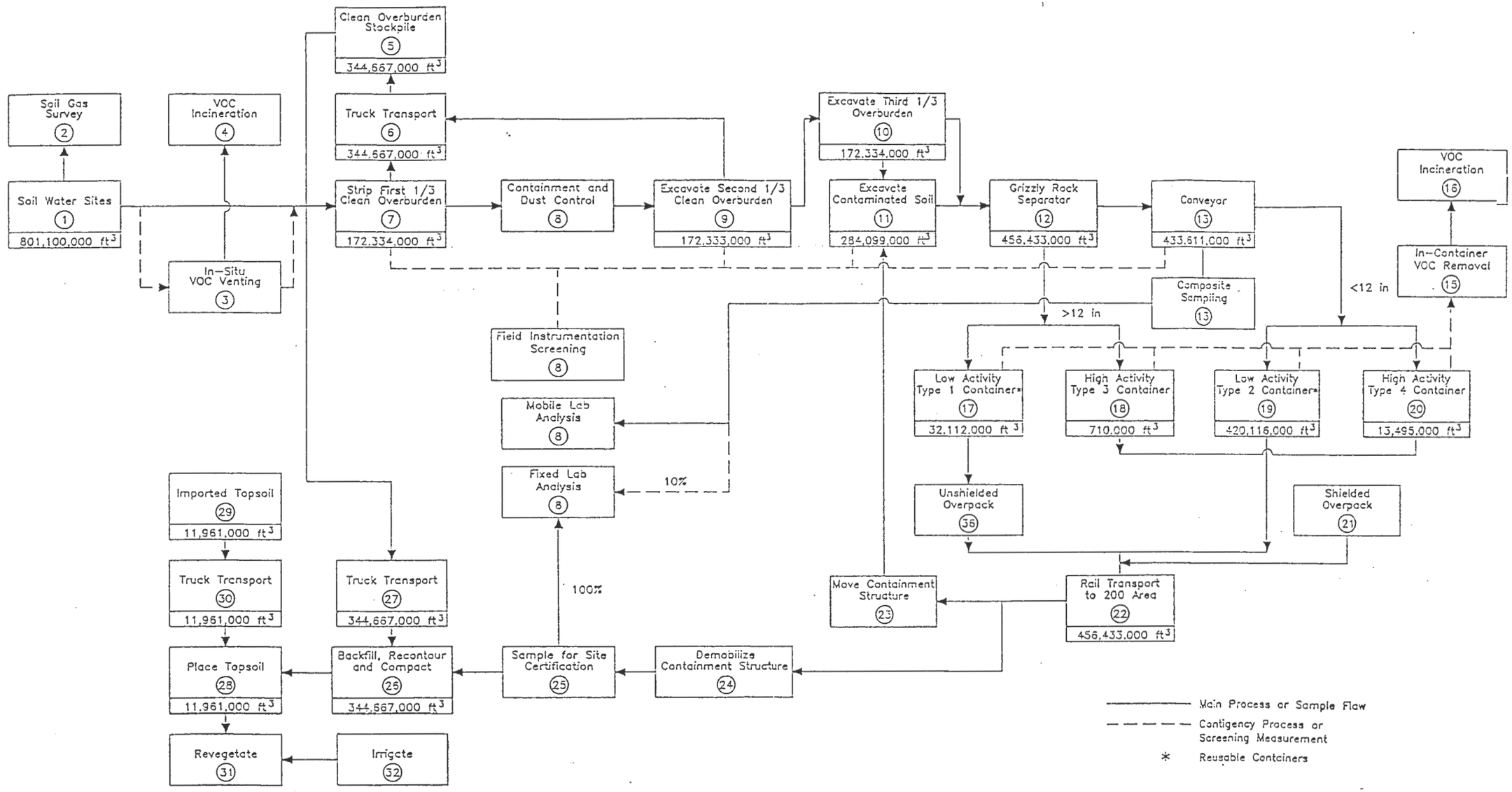

Figure 3-1b. Soil Excavation Flow Diagram. (sheet 1 of 3)

PFD\033192-B

THIS PAGE INTENTIONALLY
LEFT BLANK

Figure 3-1b. Soil Excavation Flow Diagram. (sheet 2 of 3)

List of Processes		
Process number	Process name	Description
1	Soil Waste Sites	Cribs, trenches, French drains, unplanned releases; overburden removal on all sites
2	Soil Gas Survey	Petrex samplers; mobile lab analysis
3	In Situ Volatile Organic Compound Venting	Extraction vent wells; vacuum pump
4	Volatile Organic Ccompound Incineration	Gas-fired vapor incinerator
5	Clean Overburden Stockpile	Onsite storage pile
6	Truck Transport	75-85 ton trucks
7	Strip First 1/3 Overburden	Loaders
8	Containment and Dust Control	Bridge truss structure on crawlers; portable ventilation system w/blower, pre-filters, HEPA filters
9	Excavate Second 1/3 Overburden	Loaders; bulldozers
10	Excavate Third 1/3 Overburden	Loaders; bulldozers
11	Excavate Contaminated Soil	Loaders; backhoes; bulldozers
12	Grizzly Rock Separator	12-in. grizzly screen
13	Conveyor	Fully enclosed rubber belt conveyors; feed hopper; discharge bin
14	Composite Sampling	Automatic samplers on conveyor
15	In-Container Volatile Organic Compound Removal	Containers with vent pipes
16	Volatile Organic Compound Incineration	Vacuum pump; vapor incinerator
17	Low-Activity Type 1 Container	50-yd^3 box with hinged top lid; reusable
18	High-Activity Type 3 Container	50-yd^3 box with hinged top lid; not reusable
19	Low-Activity Type 2 Container	50-yd^3 box with soil fill ports; reusable
20	High-Activity Type 4 Container	50-yd^3 box with soil fill ports; not reusable
21	Shielded Overpack	Lead shielded steel box with hinged lid
22	Rail Transport to 200 Area	Rail flatcars, locomotive
23	Move Containment Structure	Move to new position within site
24	Demobilize Containment Structure	Move to new site
25	Sample For Site Certification	Soil samples for fixed lab analysis; full QA/QC
26	Backfill, Recontour, and Compact	Loaders; bulldozers; compactors
27	Truck Transport	75-85 ton trucks

Figure 3-1b. Soil Excavation Flow Diagram. (sheet 3 of 3)

List of Processes		
Process number	Process name	Description
28	Place Topsoil	Loaders; bulldozers; graders
29	Imported Topsoil	Loaders; bulldozers
30	Truck Transport	75-85 ton trucks
31	Revegetate	Native grasses; farm implements
32	Irrigate	Irrigation sprinkler system
33	Field Instrumentation Screening	Radiation detectors and portable GC on truck-mounted, telescoping boom
34	Mobile Lab Analysis	Radionuclide/chemical analysis
35	Fixed Lab Analysis	Radionuclide/chemical analysis with full QA/QC
36	Unshielded Overpack	Steel box with hinged lid

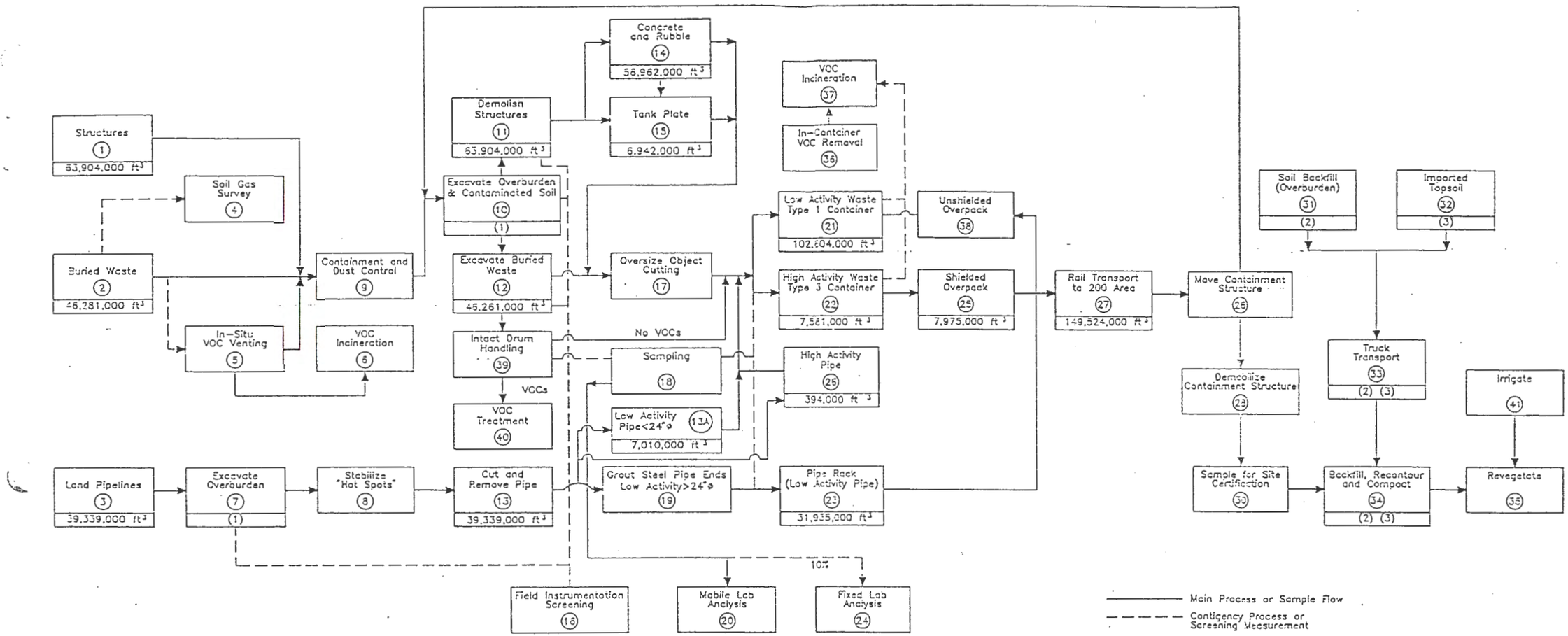

Notes:

1– Volumes Included as Overburden and Contaminated Soil in Figure 3-1B, Process nos. 7 9 10 11

2– Volumes Included in Soil Backfill in Figure 3-1B, Process no.

3– Volumes Included in Topsoil in Figure 3-1B, Process no. 28

Figure 3-1c. Structures, Buried Wastes, and Land Pipelines Flow Diagram. (sheet 1 of 3)

THIS PAGE INTENTIONALLY
LEFT BLANK

Figure 3-1c. Structures, Buried Wastes, and Land Pipelines Flow Diagram. (sheet 2 of 3)

List of Processes		
Process number	Process name	Description
1	Structures	Concrete retention basins, steel retention basins, outfall structures, underground structures except pipelines
2	Buried Waste	Reactor parts, soft waste, non-rad landfills, etc.
3	Land Pipelines	Small pipelines (<24 in.), Large pipelines (>24 in. to 84 in.)
4	Soil Gas Survey	Petrex samplers; mobile lab analysis
5	In Situ Soil Venting	Extraction wells; vacuum pump
6	Volatile Organic Compound Incineration	Gas-fired vapor incinerator
7	Excavate Overburden	Backhoes
8	Stabilize "Hot-Spots"	Gunite
9	Containment Dust Control	Bridge truss structure on crawlers; portable ventilation system w/blower, pre-filters, HEPA filters
10	Excavate Overburden and Contaminated Soil	Loaders; backhoes; bulldozers; conveyors
11	Demolish Structures	Concrete crackers, hammers, and shears
12	Excavate Buried Waste	Loaders; drum handling attachments
13	Cut and Remove Pipe	Densifiers and shears; grapples
13A	Low-Activity Pipe (<24-in. diameter)	Shears, grapples
14	Concrete and Rubble	Concrete; rebar; timber; steel shapes
15	Tank Plate	Steel retention basin plate
16	Field Screening Instrumentation	Radiation detectors and portable GC on telescoping boom
17	Oversize Object Cutting	Shears
18	Sampling	Soil and intact drums
19	Grout Seal Pipe Ends (Low- Activity)	Grout truck; grout
20	Mobile Lab Analysis	Radionuclide/chemical analysis
21	Low-Activity Waste Container Type 1	50-yd^3 box with hinged lid; reusable
22	High-Activity Waste Container Type 3	50-yd^3 box with hinged top lid; not reusable
23	Pipe Rack (Low-Activity Pipe)	Open steel rack for stacking pipe
24	Fixed Lab Analysis	Radionuclide/chemical analysis with full QA/QC

Figure 3-1c. Structures, Buried Wastes, and Land Pipelines Flow Diagram. (sheet 3 of 3)

List of Processes		
Process number	Process name	Description
25	Shielded Overpack	Lead shielded steel box with hinged lid
26	High-Activity Pipe	Large diameter pipe exceeding radiation/TRU criteria
27	Rail Transport to 200 Area	Flatbed railcars; locomotives
28	Move Containment Structure	Move to new position within site
29	Demobilize Containment Structure	Move to new site
30	Sample For Site Certification	Soil samples for fixed lab analysis; full QA/QC
31	Soil Backfill (Overburden)	Replace stored overburden into excavations
32	Imported Topsoil	Excavate topsoil at borrow area
33	Truck Transport	75-85 ton trucks
34	Backfill, Recontour, Compact	Loaders; bulldozers; compactors
35	Revegetate	Plant native grasses
36	In-container Volatile Organic Compound Removal	50-yd^3 containers with vent pipes
37	Volatile Organic Compound Incineration	Gas-fired vapor incinerator
38	Unshielded Overpacks	Steel box with hinged lid
39	Intact Drum Handling	Loaders; drum handling attachments
40	Volatile Organic Compound Treatment	Thermal processing unit
41	Irrigate	Irrigation sprinkler system

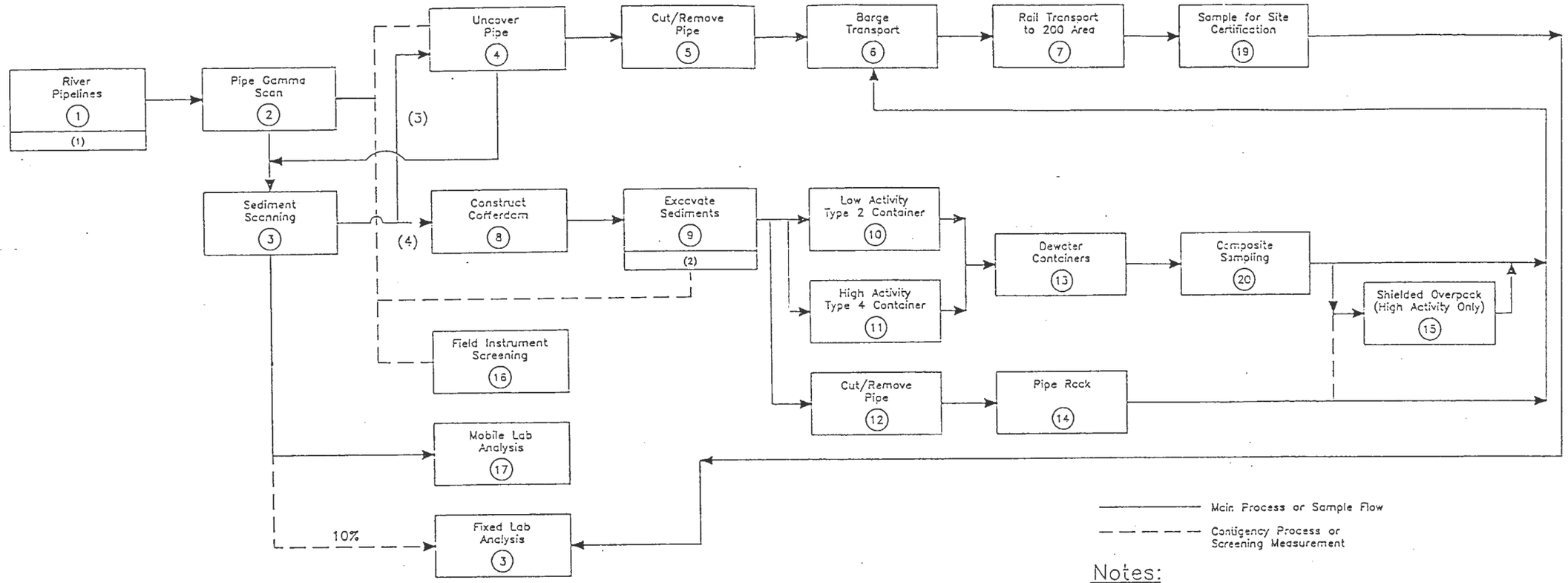

Notes:

1– Pipe Quantities Not Estimated Separately, Included in Land Pipelines, see Figure 3–1C, Process no. (3)

2– Sediment Quantities not Estimated Separately, Included in Soil Quantities on Figure 3–1A, Process no. (4)

3– Scenario 1: Approach if Sediment Contamination not Above Cleanup Standards

4– Scenario 2: Approach if Sediments Contamination Above Cleanup Standards

PFD\040292-B

Figure 3-1d. River Pipelines Flow Diagram. (sheet 1 of 2)

Figure 3-1d. River Pipelines Flow Diagram. (sheet 2 of 2)

List of Processes		
Process number	Process name	Description
1	River Pipelines	Large diameter steel pipe buried under the river
2	Pipe Gamma Scan	Moles with gamma detectors
3	Sediment Sampling	Vacuum samplers; barge platform
4	Uncover Pipe	Clamshell dredge
5	Cut/Remove Pipe	Cable crane; underwater torches
6	Barge Transport	Barges
7	Rail Transport to 200 Areas	Rail flatcars; locomotive; gantry crane; bridge crane
8	Construct Cofferdam	Install sheet piling around contaminated sediments
9	Excavate Sediments	Clamshell dredge
10	Low-Activity Type 2 Container	50-yd^3 box with hinged top lid; reusable; dewatering pipes
11	High-Activity Type 4 Container	50-yd^3 box with hinged top lid; not reusable; dewatering pipes
12	Cut/Remove Pipe	Cable crane; underwater torches
13	Dewater Containers	Drain containers into dammed area
14	Pipe Rack	Open steel rack for stacking and transporting pipe
15	Shielded Overpack	Lead shielded steel box with hinged lid
16	Field Instrument Screening	Radiation detectors/portable GC on telescoping boom
17	Mobile Lab Analysis	Radionuclide/chemical analysis
18	Fixed Lab Analysis	Radionuclide/chemical analysis with full QA/QC
19	Sample for Site Certification	Soil samples for fixed lab analysis
20	Composite Sampling	Manual thief samplers

The instrumentation systems must be capable of operating effectively in adverse environments; i.e., high dust loading, moisture, and heavy vibration. Several instrumentation alternatives are not feasible based on current technology because they cannot perform satisfactorily in such an adverse environment. Examples include the following:

- Cutie Pie detectors
- Pancake probes
- Ground-penetrating radar (GPR)
- X-ray fluorescence (XRF)
- Metal detection (electromagnetic induction, magnetometer).

Equipment capable of operating in adverse environments includes the following:

- Scintillation detectors
- Sodium iodide detectors
- Geiger-Mueller (GM) probes
- Field instrument for detecting low energy radiation (FIDLER) detectors
- Micro R meters
- Alpha continuous air monitors
- Portable gas chromatograph
- Neutron counters
- Photoionization detectors (PID).

A summary matrix of instrumentation capabilities is given in Table 3-1.

Table 3-1. Instrumentation Capabilities.

Detection Options	Criteria for Field Measurement System							
	Continuous/ real-time capability	Adverse environment capability[a]	Sensitivity	Maintenance	Portability size/ capacity[b,c]	Measurement rate	Data output form	Range of contaminants handled[d]
Radionuclide detection:								
Scintillation detectors	Yes	Yes	Depends on setup	Easy	Yes	cpm	Analog/LCD	Alpha, gamma, and beta
Cutie Pie detectors	Yes	No	1 μR/h and up	Easy	Yes	mr/h	Analog/LCD	Beta and gamma
Sodium iodide detectors	Yes	Yes	Depends on setup	Easy	Yes	cpm	Analog/LCD	Beta and gamma
Geiger-Mueller detectors	Yes	Yes	100 c/min and up	Easy	Yes	cpm	Analog/LCD	Alpha, gamma, and beta
Pancake probes	Yes	No	Alpha: 3 MeV, beta: down to 40 keV	Easy	Yes	cpm	Analog/LCD	Alpha, gamma, and beta
FIDLER detectors	Yes	Yes	100 c/min and up	Easy	Yes	cpm	Analog/LCD	Low-energy gamma and x ray
micro-R meter	Yes	Yes	1 μR/h and up	Easy	Yes	mr/h	Analog/LCD	Beta and gamma
Alpha continuous air monitor	Yes	Yes	4 MPC-hours of ^{239}Pu can be detected	Easy	Yes	cpm	Analog/LCD	Alpha particles
Criticality detection:								
Neutron counter	Yes	Yes	Between 0.025 eV to 10 MeV	Easy	Yes	5-5K mr/h	Analog/LCD	Neutrons
Chemical constituents detection:								
Volatile organic compounds:	No	No	Vapor analyses up to 90% accurate	Difficult	Yes	0.1-1000 p/m	Lab report	Soil vapors
EMFlux[e]	Yes	Yes	Ionization potentials of less than 15.4-eV	Difficult	Yes	0.1-1000 p/m	Chart recorder	Organic vapors
Portable gas chromatograph	Yes	Yes	Ionization potentials from 9.5 to 11.7-eV	Easy	Yes	1-200 p/m	Analog	Organic and some inorganic vapors
Photoionization detector	No	Yes		Easy	No	0 p/m-TLV	Color scale	Many different chemicals
Colorimetric tubes			35% accurate					
Metals:	No	No		Moderate	Yes	Concentration	Printout	
X-ray fluorescence			Moderate					Broad range of elements
Geophysical measurements:								
Ground-penetrating radar	No	No	Up to 100 ft under ideal conditions	Difficult	Yes	Profile	Black and white strip	Variety of subsurface
Electromagnetic inductance	No	Yes	From 15 to 250 ft deep	Difficult	Yes	record	chart	problems
Magnetometer	No	Yes	Ferrous material detection	Difficult	Yes	Surveyors map	Analog/LCD	Soil conductance
Metal detector	Yes	No	Ferrous material detection	Easy	Yes	Surveyors map	Analog/LCD	Difference in magnetic fields
						Metals	Analog/LCD	Ferrous materials

[a]Adverse field environment capability indicates whether an instrument can perform in a dusty, mechanically stressful environment.
[b]The remote capabilities of radionuclide detection are limited to a maximum of 50 ft.
The remote capabilities of volatile organic compound analyses can be up to 1,000 ft.
[c]Size/capacity determines whether the instrument could fit in a boom-mounted instrument box.
[d]Alpha and beta detection require the probe to be next to the source(s).
[e]EMFlux is a trademark of the Quadrel Company.
LCD = liquid crystal display.
MPC = maximum permissible concentration.
TLV = threshold limit value.

THIS PAGE INTENTIONALLY
LEFT BLANK

An instrument package mounted on a telescoping boom (e.g., a "cherry picker" type) and operated from a truck is proposed for real-time characterization of the individual operational units as excavation proceeds. The concept envisions a separate instrumentation vehicle that will work in tandem with the excavation equipment. The boom-mounted instrumentation package will include the following instruments:

- Alpha detection: alpha continuous air monitor
- Beta detection: GM detector
- Gamma detection: GM detector
- Criticality (neutron detection): neutron counter
- Volatile organic compounds: portable gas chromatograph.

These instruments were selected based on the current state of technology in instrumentation. Development and prototyping of an integrated system would be required to prove the workability of the system. Development might show instrument types other than those listed to be more effective.

The detectors or probes for each instrument would be mounted at the boom end of the instrument vehicle; the controls and readouts would be located inside the shielded cab of the vehicle. The vehicle itself would consist of a truck modified for shielding and air supply, similar to the excavation equipment described in Section 3.2.2.

In addition to the boom-mounted instrumentation package for monitoring at the excavation face, additional radiation detection instrumentation (GM detectors) will be mounted on the conveyor as described in Section 3.2.2 to control the selection of containers based on activity levels.

3.1.2 Sampling and Analysis

For study purposes, the sampling and analysis scheme is defined as follows:

- An adjunct to field screening instrumentation to provide rapid-turnaround mobile laboratory data to guide excavation activities
- A means of confirming field instrument screening data on soil waste radioactivity levels/TRU content; such sampling is used to determine when to stop excavating soil.

Field instrument screening will provide data indicating relative levels of radioactivity and will determine presence and nature of VOCs. Field screening data will not, however, provide definitive information on absolute concentrations of radionuclides or VOCs in the waste material. Field screening also will not identify chemical contaminants such as metals and anions. Field screening will merely provide rapid information for decisions on where and how deep to excavate, what containers to use, etc. The precision of such monitoring is not expected to be high because of the many variables associated with operating under adverse conditions.

Actual contaminant concentration data will be provided by obtaining regular samples of soil waste materials for analysis in the mobile laboratory. A description of the mobile laboratory is given in Appendix E of the summary document to this report (WHC-EP-0486) (WHC 1992). Samples of soil will be obtained by automated samplers on the conveyor belts used to convey soils into shipping containers. These samples will be composited such that the analysis will indicate average composition of each container of soil. The sampling and analysis of each container batch will confirm radioactivity levels and that volatile organics are below land disposal restriction limits. Containers would not be shipped until results for the respective batch of soil were available from the mobile laboratory.

It is proposed that 10% of the samples be duplicated and run in fixed laboratories using accepted U.S. Environmental Protection Agency (EPA) methods and full quality assurance/quality control (QA/QC). The intent of the fixed laboratory analysis is to provide confirmation of the mobile laboratory results so as to provide a defensible record of analyses for decisions to discontinue site excavation.

Mobile laboratory analyses will be provided for volatile and semi-volatile organic compounds, metals, and anionic species. Sample turnaround times of 24 h at most will be required. Radionuclide analysis for samples with activity levels above 5 mrad/h may not be performed in a mobile laboratory because of the need for a very clean and shielded environment. However, if mobile laboratories are not provided for this application, fast-turnaround, radionuclide analytical capability would be required at existing Hanford Site laboratories. Use of onsite laboratories will require development of a packaging and shipping infrastructure to facilitate the rapid sample turnaround.

Samples will also be collected from the conveyor during stripping of the second one-third of clean overburden. These samples will be sent to the mobile laboratory to confirm that no contaminated soil will be returned to the site during backfilling.

Nonsoil waste forms will be surveyed only for radiation activity level and presence of VOCs. Sampling and analysis of these wastes will not be necessary because it has been assumed that all nonsoil waste will be removed from the site regardless of contamination levels.

For cost-estimating purposes, the following provides a listing of the number of samples to be taken of each type:

- Assume one composite sample per waste container (less than 12-in. soil, Types 2 and 4 only) analyzed in the mobile laboratories and 10% duplicates. The total number of soil (less than 12-in.) containers shipped to the 200 Areas is 401,492 (see Table 7-1). This results in an average sample load of about 107 samples per operating day (assuming a 2-shift day)

- Assume one composite sample of the second one-third of overburden for every 500 yd^3 of material excavated. This results in a total of 12,765 samples or an average of about 4 samples per 2-shift day

- Ten percent of the composite samples will be run in fixed laboratories for confirmation. Thus, the total number of fixed laboratory samples would be about 40,000 over 20 yr or an average of about 11 samples per operating day

- For river pipelines, assume 25 sediment samples along each pipeline (20 at 100-ft spacing and assume 5 at gamma scan detected hot spots). The total number of samples is 175 for mobile laboratory analysis and 18 for fixed laboratory confirmation

- Samples will be taken from each intact drum to determine VOC content. For estimating purposes, assume 500 samples.

Sampling and analysis for site certification is discussed in Section 3.5. Sampling of intact drums is discussed in Sections 3.3.1 and 3.3.3.

3.2 SITE RECOVERY SYSTEM

The following subsections discuss the equipment systems required for containment; excavation of buried waste, contaminated soil, and overburden; structure demolition; and oversize object cutting and size reduction.

3.2.1 Site Containment System

The concept for containment consists of the following two elements:

- A containment structure that provides a control barrier between excavation operations and the environment

- Dust-suppression measures to control dust within the containment structure.

The macroengineering approach conservatively specifies the use of containment structures at contaminated waste sites, but the use of containment structures for all sites should not be a foregone conclusion. Although structural containments can provide good control of fugitive dust during excavation, they could impose operational difficulties and add significant cost to the remediation. Development of site remediation techniques should investigate the effectiveness of alternative dust control measures. Examples of alternatives that could be considered are discussed at the end of Section 3.2.1.

To facilitate high volume rapid excavation, it is preferred that the containment structure will span the entire width of the individual waste site. Allowing for excavation slopes with no shoring, the final excavations will vary in width from approximately 200 ft to 900 ft. Appendix B.2 provides detailed estimates of waste site dimensions and the corresponding containment structure size requirements. However, for standardization, three sizes of containment structures have been selected:

- 1,000 ft wide, 400 ft long for large burial grounds and retention basins

Figure 3-3. Conceptual Sketch of Two Adjacent Containment Structures on Crawler Tracks.

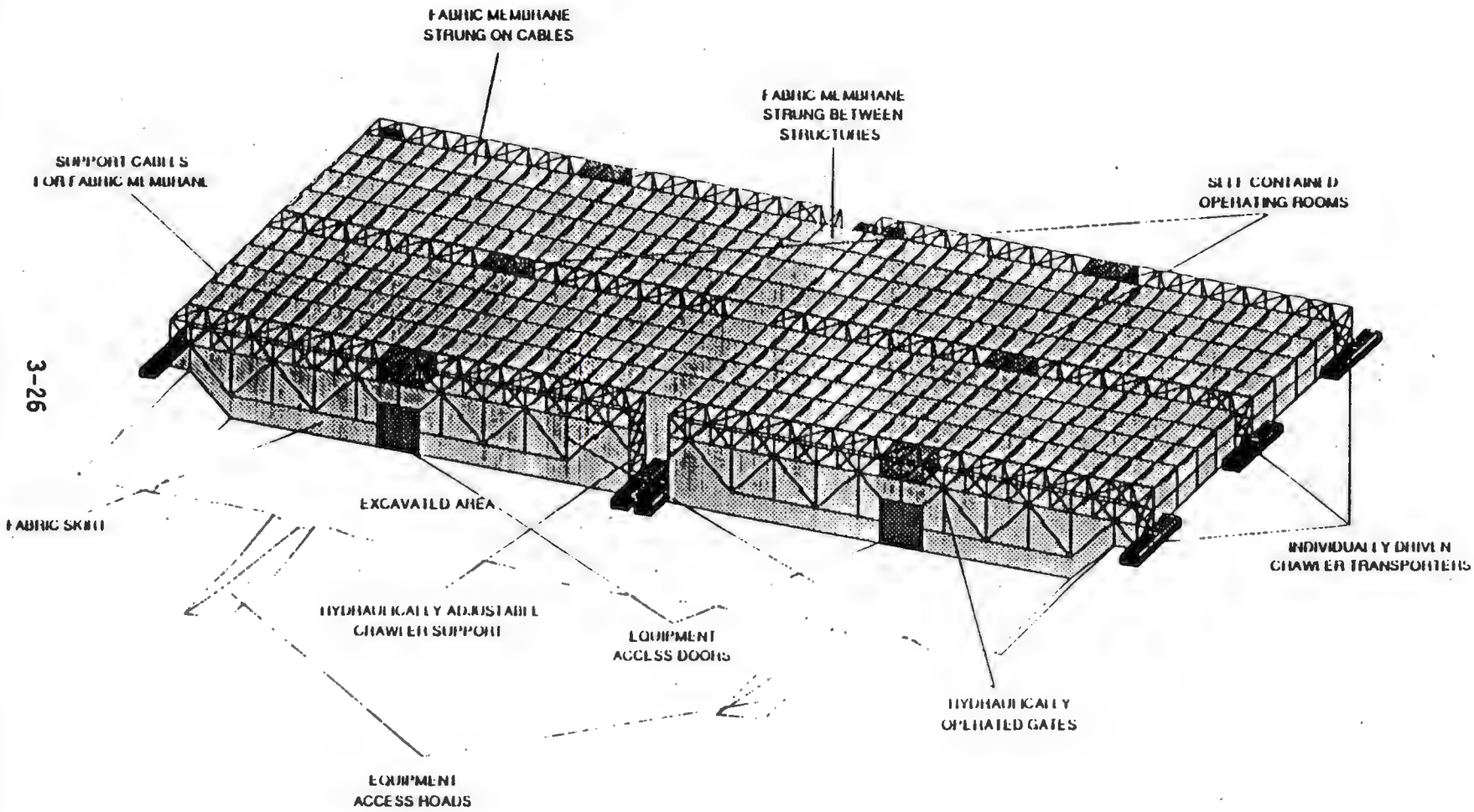

The structures will be assembled by bolting the individual box member together at flanges to form the trusses. Each truss is attached to a electrically powered, hydraulically driven crawler transporter. The original Westinghouse Hanford concept specified 350-ton crawlers provided by the Neil Lampson Company. Larger crawlers are available if engineering development indicates they are warranted. Each crawler would have hydraulic leveling devices so that the structure could be moved or set on uneven terrain.

The structure would be covered with a coated polyester fabric that would be hung from the interior of the trusses via cables. The coated polyester fabric is readily available, commonly used in industry with good success, and can be heat welded in the field, which would help to facilitate the modular construction capability.

A secondary disposable liner within the structure would provide additional protection for the fabric and would minimize the need for decontamination of the fabric prior to transport of the structure from one waste site to the next. The recommended liner is 8-mil, clear flexible polyvinyl chloride film. This sheeting is commonly used at the Hanford Site as covering for "greenhouse"-type temporary containment structures. The liner sheeting can also be heat welded together.

Although the Westinghouse Hanford design depicts a flat roof surface, additional engineering design development is needed to allow for wind and snow loads, which may require that the structure be arched rather than flat.

Designing for wind loads will probably require some form of cable anchoring system. Anchoring will be required when the structure is moved as well as when it is set in place. One concept envisions heavy concrete blocks that are attached to the structure via guy cables on winches. As the structure is moved, the winches are used to let out the cable but keeping it taut during movement. Concrete block anchors would have to be set in place in advance of the structure so that anchors were always available over the path of movement. Other types of anchors might be considered such as driven piles.

Out of a total of 156 contaminated sites, 126 sites can be completely contained by an appropriate structure and excavated without moving the structure (see Appendix B.2). The remaining 30 sites will require progressive movement of the structure over the particular site in increments of approximately 300 ft as the excavation proceeds.

3.2.1.2 Containment Structure Support Systems. The following systems will be necessary to provide ancillary support for the functions provided by the containment structure:

- Ventilation system
- Fire-suppression system
- Primary power source
- Emergency power source
- Airlock entrances/exits.

The ventilation system is composed of flexible ducting throughout the containment structure connected to exhaust blowers mounted on trailers outside the structure. The exhaust will be filtered through a bank of prefilters and two banks of high-efficiency particulate air (HEPA) filters in series. An air heater is provided for dewpoint control to prevent water vapor condensation on the HEPA filters. Figure 3-4 is a simplified diagram of the exhaust trailer concept. There will be two trailers, each handling half of the air flow. The total airflow is expected to be on the order of 100,000 stdft^3/min, which will allow for approximately one air change per hour in the largest structure. The exhaust air would be continuously monitored to ensure that releases were within acceptable limits.

The fire-suppression system has two components, a portable Halon (a trademark of Allied-Signal, Incorporated) system, used primarily for localized fires at the excavation face, and a structure-wide water sprinkler system. The water sprinkler system is of conventional design and will consist of pumps, piping, sprinkler heads, and two 10,000-gal transportable water tanks or tanker trucks. The fire-suppression system would be designed to provide adequate protection until the Hanford Fire Department could arrive onsite with additional firefighting equipment, if necessary.

The emergency power source, consisting of a portable diesel generator, will serve as a backup source for equipment essential to health and safety, such as supplied air to workers, lighting inside the structure where personnel are working, the fire-suppression system, and all detectors. Normal power sources would be obtained by tie-ins to the existing electrical power infrastructure that exists in all of the 100 Areas.

Five portable airlocks will be attached to each structure. The airlocks will be of the same truss and fabric construction as the main structure and will be located on the side farthest away from soil transfer points within the structure. The types of airlocks are as follows:

- Two airlocks for personnel (including emergency egress)
- One airlock dedicated for waste containers
- One airlock for small equipment and waste containers
- One airlock for large mobile equipment.

The airlocks will have separate portable ventilation systems to filter the air. Further engineering development will be necessary to ensure that the airlocks are not positively pressurized with respect to outside atmosphere. The air leakage direction should be from the airlock back into containment structure.

Airlocks will not be required for conveyors because they will be fully enclosed systems that will be sealed at points of penetration through the wall of the containment structure.

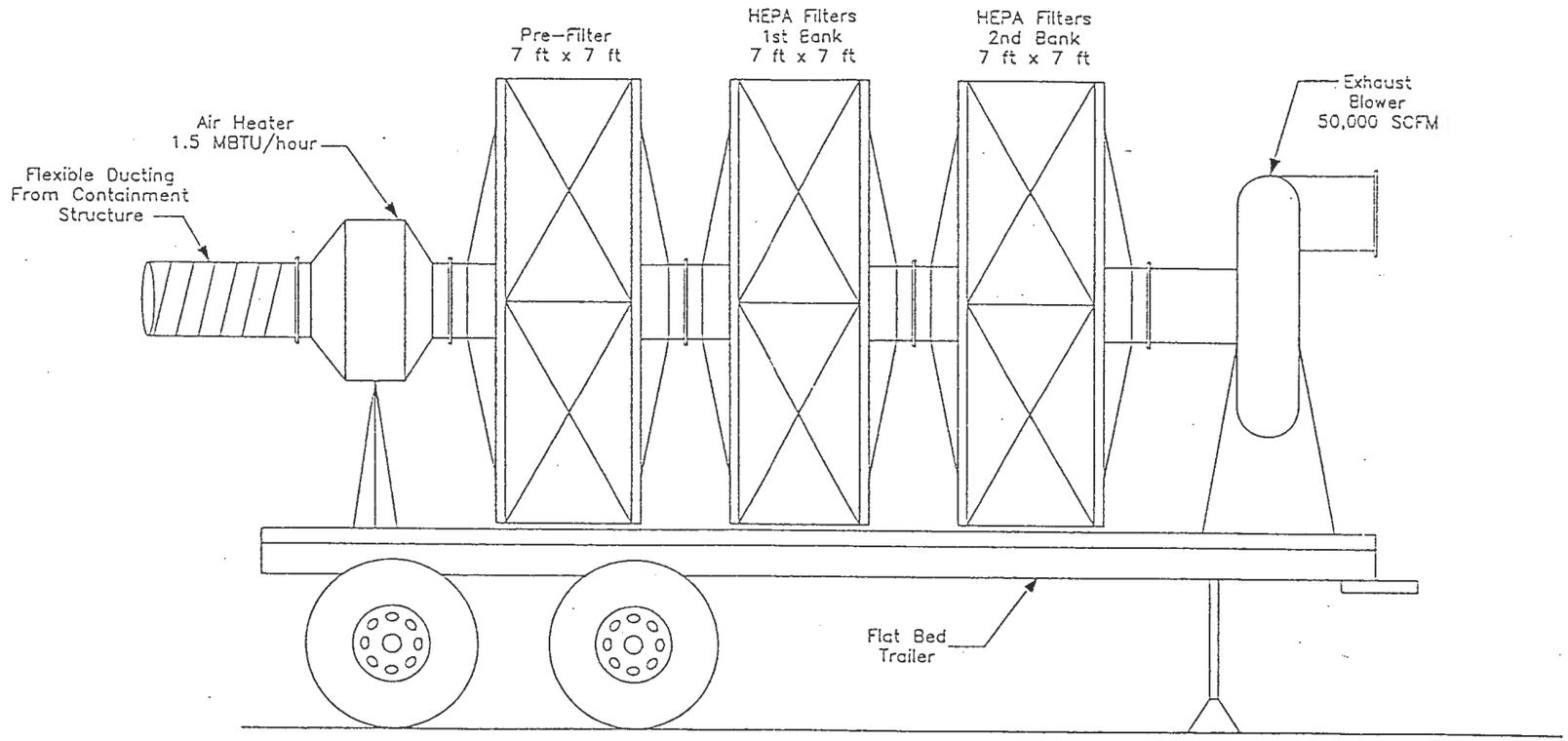

Containment Structure Ventilation System

MRA\050492-C

Figure 3-4. Containment Structure Ventilation System.

THIS PAGE INTENTIONALLY
LEFT BLANK

3.2.1.3 Dust-Suppression Systems. The primary dust-generating activities are associated with the wheel loader excavator and the concrete demolition tools. Water sprays will be designed to create a fine fog or mist at the excavation face both to minimize initial dust propagation and to quickly settle out airborne dust generated at the working face. The excavation face will not be deluged with water so as to avoid potential mobilization of contaminants. The water spraying system will consist of water-supply trucks, low-pressure pumps, flexible hoses, and misting-type aerator emitters.

Any water used for decontamination will be collected in catch basins and stored in portable tanks. Decontamination water used for dust control at the excavation face will be pumped from the storage tank to a separate water sprayer.

The wheel loader, used as the primary excavating device, and other wheeled or tracked equipment also have the potential for generating dust when they are driven from place to place within the structure. To control driven-surface dusting, a soil stabilizer will be utilized, such as EnduraSeal 200. (Final selection of the appropriate soil stabilizer will be pending testing with Hanford soils under conditions similar to those anticipated inside of the containment structures; see Chapter 8.0). EnduraSeal 200 is a nonhazardous product manufactured from tree sap and bituminous material that creates a durable driving surface. Use of a material such as this is not expected to interfere with any subsequent excavation or handling of treated soil.

Vacuum hoods will be utilized at the conveyor hoppers to capture the dust generated when the loader dumps the soil out of the bucket into the feed hoppers. Vacuum exhaust will be cleaned via cyclone separators, pre-filters (e.g., filter bags and air cannons), and HEPA filters mounted on trailers.

3.2.1.4 Alternatives to Containment Structures. One alternative concept to containment structures would utilize a wind skirt surrounding the excavation to reduce wind velocity. Such wind skirts would be modular, constructed of smaller segments linked together to form the skirt. Each segment would be designed as a free-standing unit and portable; i.e., transported on trucks and handled with forklifts or small cranes.

The wind skirt would be used in combination with controls such as the following:

- Administrative controls that limit excavation activities during periods of high wind velocity or other adverse weather conditions
- Water sprays, soil stabilizers (e.g., EnduraSeal, Gunite, foams or other fixatives) to control dusting during excavation and to fix exposed contamination between shifts and during weekends.

Use of these types of measures in lieu of containment structures would be governed to a large extent upon the known nature of the sites. For example, the highly radioactive N Area cribs would require full containment structures. However, many of the sites that are known to be nonradiologically contaminated or that have very low levels of contamination would be good candidates for the alternative approaches.

3.2.2 Site Excavation System

3.2.2.1 Excavation Systems. Based on the volume estimates of materials to be excavated as discussed in Chapter 7.0, the average rate of soil will be 434 bank cubic yards per hour (byd^3/h). This rate was obtained by dividing the total volume by the available working hours in 20 yr (60,000 h). The available working hours were calculated assuming one shift per day, 5 days per week, 6 months of the year, and two shifts per day, 5 days per week in the other 6 months of the year. To meet this excavation rate, three excavation operations inside containment structures and one overburden removal operation will occur simultaneously.

To excavate the plumes of contaminated soil that exist beneath the contaminated sites, it is first necessary to remove significant volumes of uncontaminated overburden. To estimate soil volumes, it was assumed that the contaminated plume extends to a depth of 33 ft below the bottom of each waste site. Volume calculations are given in Appendix A.4, Table A.4-1. To estimate the lateral dimensions of the contaminated soil column, it was assumed as a study base that the lateral dispersion extended 50 ft in all directions beyond the vertical projections of the site boundaries. The proposed excavation scheme for the 100 Areas also assumes that the excavations will not be shored but excavated leaving side slopes at the natural angle of repose of 1.5:1.

As much of the uncontaminated overburden as possible could be removed before containment structures are placed over the sites to enable the overburden excavation work to proceed more rapidly and at a lower cost than after the structures have been placed over the sites. It is assumed that the overburden can be stripped from a zone extending from the planned final crest of the excavation, to a line running initially 25 ft outside the stated limits of the contaminated site (Figure 3-5). In practice, however, the limits of overburden will be determined by real-time measurement of contamination as excavation proceeds such that the precontainment overburden stripping closely approaches the edges of contaminated materials. As a contingency, soil-stabilizing agents such as Gunite or EnduraSeal would be available to stabilize the soil quickly, if necessary, to prevent spread of contamination until the containment structure could be emplaced. Appropriate side slopes will be left in the stripping zone, and it is estimated that the overburden can be removed to a depth of at least 20 ft. Calculations of overburden volumes are given in Appendix A.4.

The excavated overburden will be stockpiled near the sites for use as backfill after removal of contaminated material from the excavation has been completed. One front-end loader would work in combination with dump trucks on precontainment stripping. Precontainment stripping of sites can proceed independently (in parallel with) excavation of contaminated material at sites that have already been stripped and thus is not expected to be a critical path operation.

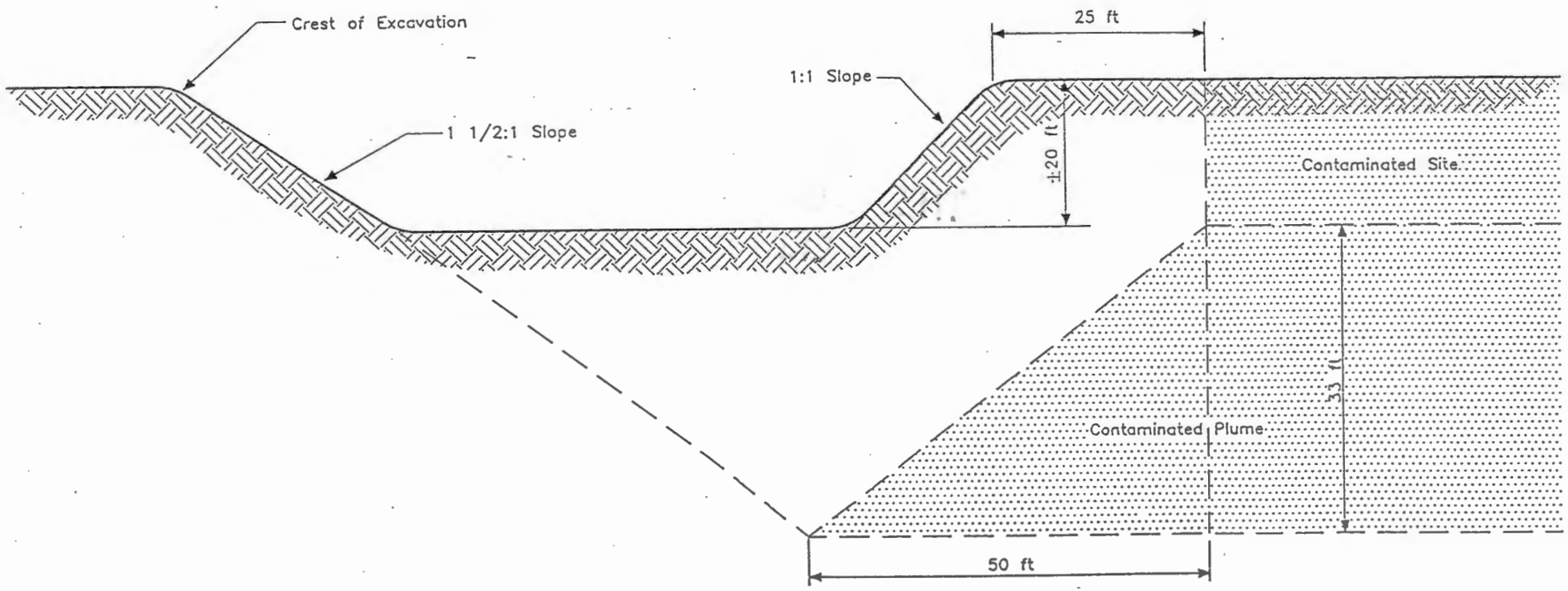

Precontainment Overburden Excavation

MRA\05059:

Figure 3-5. Precontainment Overburden Excavation.

THIS PAGE INTENTIONALLY
LEFT BLANK

Table 7-1. Container Summary.

Material	Total volume, loose ft^3	Container type	Total number containers filled	Peak number containers filled/day*
Low-activity soil, >12 in.	22,112,000	1	20,475	7
Low-activity soil, <12 in.	420,116,000	2	388,997	130
High-activity soil, >12 in.	710,000	3	657	<1
High-activity soil, <12 in.	13,495,000	4	12,495	4
Low-activity waste except pipe >24 in.	109,614,000	1	101,495	34
High-activity waste except pipe	7,581,000	3	7,020	3
Low-activity pipe >24 in.	31,935,000	Racks	10,165 railcars	4
High-activity pipe	394,000	3	365	<1

*Assumes a 16-h work day; peak rate = 1.25 x average rate.

8.0 EQUIPMENT AND WORKFORCE NEEDS

This chapter summarizes equipment and workforce required to support excavation, demolition, and transportation of contaminated material. The information, to be used primarily for cost purposes, is provided in Tables 8-1 and 8-2. Key assumptions for development of this information are presented in Sections 8.1 and 8.2. Major cost drivers are identified and discussed in Section 8.3. A schedule for implementation of the remediation scheme is presented in Section 8.4.

The quantity estimates are based on the following assumptions on number of parallel operations occurring simultaneously:

- One overburden removal operation
- Three excavation/demolition sites under containment structures
- Two land pipeline uncovering operations and one pipeline removal operation (no containment structure)
- One river pipeline removal operation (assumes Scenario 2 removal, see Section 3.2.4)
- Three rail transport trains.

8.1 ASSUMPTIONS FOR DEVELOPING EQUIPMENT NEEDS

Key assumptions used to generate Table 8-1 quantities are as follows.

- Utilization rates discussed in Chapter 3.0 form the basis for specifying equipment
- Equipment capacities based on 20 yr of operation, 250 days/yr, 8 h/day for half the year, and 16 h/day for half the year; this is equivalent to 3,000 operating h/yr or 60,000 h during the 20-yr project life
- Vehicle spares are added where deemed appropriate to allow for out-of-service maintenance
- To meet the required excavation/demolition rates, there will be three excavation/demolition operations under containment structures and one overburden removal operation occurring simultaneously. The three operations can be any combination of excavation or demolition, e.g., two excavation operations, one demolition operation
- To meet the required land pipeline removal rates, there will be two pipeline soil excavation operations, one pipeline cutting and removal operation, and one manhole/junction box demolition operation, all occurring simultaneously

- Removal of river pipelines is an independent operation and is not on the critical path. Therefore, river pipeline removal can occur anytime during remedial operations.

8.1.1 Demolition System

- Pipeline removal consists of dedicated demolition equipment that is not involved with other demolition operations

- Each landfill and burial ground excavation operation in progress requires the presence of one base excavator with shears as contingency for oversized objects

- Demolition of each metal tank requires two base excavators with plate shears operating in parallel

- Demolition of each concrete retention basin requires one concrete cracking tool and one hydraulic hammer to operate in parallel with one shear (i.e., two excavators work on each retention basin at the same time). In addition, one interchangeable grapple jaw for loading is required

- Demolition of outfall structures, cribs, French drains, trenches, storage vaults, and other concrete structures requires one base excavator with a universal processor having interchangeable jaws: shears, concrete cracking, hydraulic hammer, wood shears, and grapple jaws

- A total of five base excavation machines will be required for demolition. This allows each containment structure to possess at least one dedicated base excavator with a universal processor (for processing oversized material) with contingency for additional tools as needed. Example: One landfill excavation, one concrete retention basin removal operation, and one metal tank dismantling operation will require all five base excavators for demolition, simultaneously

- Pipeline soil excavation requires (for each of two parallel operations) one backhoe (3-yd^3 bucket), one instrumentation vehicle, and one grout pump truck

- Removal of manholes, valves, junction boxes, and tie lines (one operation) requires one base excavator with a universal processor and interchangeable shear jaws, concrete cracking jaws, grapples, hammer, one instrumentation vehicle, one grout pump truck, and one 8,000-gal water truck

- Removal of steel pipe requires three base excavators with one material densifier attachment and two universal processors with shear and grapple jaws, one instrumentation vehicle, and one grout pump truck

- Removal of concrete pipe (one operation) requires two base excavators with universal processors having two concrete cracking jaws, one shear and one grapple, one instrumentation vehicle, one grout pump truck, and one 8,000-gal water truck for dust control during concrete demolition

- Removal of river pipelines (Scenario 2) requires a clamshell dredge, a barge and tug, and underwater torches for pipe cutting. Equipment for cofferdam construction has not been specified

- One waste transport truck to be used as required

- All pipeline demolition operations require a grout pump truck to stabilize hot spots identified by the instrumentation vehicle

- All demolition operations are conducted within a containment structure, except pipeline demolition

- Demolition operations within containment structures assume availability of instrumentation vehicles and 8,000-gal water trucks; the same vehicles specified under excavation are also used in conjunction with demolition equipment.

8.1.2 Excavation System

- Precontainment excavation requires one 13-yd^3 front-end loader, five 75- to 85-ton dump trucks, and one instrumentation vehicle

- Standard equipment within each containment structure includes one 13-yd^3 front-end loader, one 7-yd^3 front-end loader, one bulldozer, one 8,000-gal water truck, and two instrumentation vehicles

- Three containment structures measuring 1,000 by 400 ft, 600 by 400 ft, and 400 by 400 ft are required

- The large containment structure will be serviced by two trailer-mounted 50,000-$stdft^3$/min ventilation units; the two smaller containment structures will each have single trailer-mounted 50,000-$stdft^3$/min ventilation units

- Each containment structure will have a conveyor system for soil handling and a winching system for container removal.

8.1.3 Transportation System

- Three freight trains are required, each consisting of 1 locomotive and 13 to 16 (100-ton capacity) bulkhead flatcars each

- Locomotive requirements are 30,400 lb of draw-bar-pull.

8.1.4 Container System

- Fifty-cubic yard containers are utilized to package both soil and coarse materials for transport to the 200 Areas

- Low-activity wastes less than 200 mrad/h are packaged in unshielded reusable 50-yd^3 boxes (Type 1 and 2 containers); containers are filled to 80% of capacity; Type 1 containers are shipped in unshielded overpacks

- High-activity wastes greater than 200 mrad/h are packaged in unshielded single-use, 50-yd^3 boxes transported in shielded overpacks (Type 3 and 4 containers); containers are filled to 80% of capacity.

8.1.5 Sampling and Analysis

- Assume one composite sample per waste container (less than 12-in. soil, Types 2 and 4 only) analyzed in the mobile laboratories and 10% duplicates. The total number of soil (less than 12-in.) containers shipped to the 200 Areas is 401,492 (see Table 7-1). This results in an average sample load of about 107 samples per operating day (assuming a 2-shift day)

- Assume one composite sample of the second one-third of overburden for every 500 yd^3 of material excavated. This results in a total of 12,765 samples, or an average of about 4 samples per 2-shift day

- Ten percent of the composite samples will be run in fixed laboratories for confirmation. Thus, the total number of fixed laboratory samples would be about 40,000 over 20 yr, an average of about 11 samples per 2-shift operating day

- For river pipelines, assume 25 sediment samples along each pipeline (20 at 100-ft spacing and assume 5 at gamma scan-detected hot spots). Total number of samples is 175 for mobile laboratory analysis and 18 for fixed laboratory confirmation

- Samples will be taken from each intact drum to determine VOC content. For estimating purposes, assume 500 samples.

8.2 ASSUMPTIONS USED TO GENERATE WORKFORCE NEEDS

The following assumptions were used to generate workforce needs summarized in Tables 8-1 and 8-2.

- Workforce needs are estimated based on requirements typical to industry practice with the addition of Health Physics Technicians for radiation monitoring. No allowances have been made to reflect work practices special to the Hanford Site

- Workforce needs are per-shift (unless otherwise noted) personnel directly involved as operators of equipment or maintenance personnel used in the major operations of excavation demolition, transportation, and support operations such as loading/unloading, monitoring, grouting, dust suppression, and maintenance (see Table 8-1). Support personnel such as Health Physics Technicians and engineers are defined in Table 8-2

- Each vehicle requires only one operator. A pool of five operators per shift is specified to cover for illness, vacation, and administrative time

- A number of observers and control room personnel are specified for each containment structure to maintain visual contact with excavation and demolition operations and to coordinate activities in a safe and efficient manner

- Job definitions are not specified when activities are transferred from two-shift-per-day to one-shift-per-day operations, assumed to cycle each 6 months.

8.3 MAJOR COST DRIVERS

Major cost drivers for 100 Area remediation are as follows:

- Shipping containers for high-activity wastes

- Containment systems

- River pipeline excavation and removal, if sediments are found to be contaminated

- Buried waste excavation, if significant quantities of intact drums are found

- Buried waste excavation, if wastes are encountered that present highly explosive or flammable hazards.

All other systems and activities are not considered major cost drivers because they involve conventional earthmoving or demolition equipment and operations. Each of the identified cost drivers is discussed in the following paragraphs.

The utilization of single-use shipping containers for high-activity wastes, which was primarily driven by waste handling/retrievability requirements at the 200 Areas, is considered the largest cost driver. Based on the assumed high-activity waste volumes and each container costs $5,000, the total cost of single-use containers would exceed $100 million. If containers cost $20,000, total cost would exceed $400 million. If waste volume were also to increase by ten-fold, as discussed further in Chapter 10.0, container cost would exceed $4 billion. Thus, disposal designs that would accommodate reusable containers for high-activity wastes should be considered to mitigate these cost vulnerabilities.

Table 8-1. Equipment and Direct Operating Workforce Requirements. (sheet 1 of 5)

Work task	Total quantity	Spares	Total required	Workforce needs, operators/shift
Pre-excavation equipment requirements				
Front-end loader with 13-yd^3 bucket	1			1
Dump truck, 75- to 85-ton	5			5
Instrumentation vehicle	1			1
Excavation equipment requirements	**Quantity per containment structure**	**Spares**	**Total required**	
Containment structures				
1000x400	--	--	1	
600x400	--	--	1	
400x400	--	--	1	
Containment structure ventilation systems				
Truck-mounted 50,000-$stdft^3$/min system; blower; one 10- x 10-ft bank prefilters; one 10- x 10-ft bank HEPA filters	2 for 1000x400; 1 each for smaller structures	1	5	
Containment structure fire- suppression system				
Water tank; Halon system; water sprinkler system	1	--	3	
Containment structure emergency power	1	--	3	
Conveyor systems				
36-in. belt, 800 ft long	1	--	3	
54-in. apron feeder	1	--	3	
Feed hopper/w 12-in. grizzly	1	--	3	
Skid 800 ft long w/winch	1	--	3	
Feed bins, two compartments	1	--	3	
36-in. belt, 400 ft long	--	2	2	
36-in. belt, 200 ft long	--	2	2	
Conveyor dust control; vacuum hood with exhauster, prefilters, HEPA filters	1	--	3	
Geiger-Mueller detector instrument package	3	1	4	
Automatic sampler	3	1	4	

Table 8-1. Equipment and Direct Operating Workforce Requirements. (sheet 2 of 5)

Work task	Quantity per containment structure	Spares	Total required	Workforce needs operators/shift
Loaders/bulldozers				
With 13-yd bucket	1	2	5	3 fulltime, 2 pool as req'd
With 10-yd bucket	--	1	1	1 pool, as req'd
With 7-yd bucket	1	--	3	3 fulltime
Bulldozers	1	2	5	3 fulltime, 2 pool, as req'd
Instrumentation vehicle	1	2	5	3 fulltime, 2 pool, as req'd
Water truck, 8,000-gal tank; off-highway truck	1	2	5	
Demolition tools, concrete and metal tanks				
Excavator			5	--
Caterpillar 235C (90,000-lb base)			5	--
Universal processor attachments				
Concrete cracking jaws			4	--
Shear jaws			4	--
Grapple jaws			4	--
Wood shear jaws			1	--
Plate shear jaws			4	--
Hydraulic hammer			2	
Land pipeline soil excavation				
Expose pipe; two operations in parallel; backhoe (3-yd bucket)			2	2 fulltime
Grout pump truck			2	2 fulltime
Instrumentation vehicle			2	2 fulltime

Table 8-1. Equipment and Direct Operating Workforce Requirements. (sheet 3 of 5)

Work task	Quantity per containment structure	Spares	Total required	Workforce needs operators/shift
Land pipeline, demolition of manholes, junction boxes, and tie-lines				
Excavator (90,000-lb base)			1	1 fulltime
Universal processor			1	
Concrete cracking jaws			1	
Shear jaws			1	
Grapple jaws			1	
Hydraulic hammer			1	
Instrumentation vehicle			1	1 fulltime
Grout pump truck			1	1 fulltime
8,000 Water truck			1	1 fulltime
Land pipeline removal				
Excavator (90,000-lb base)			5	5 fulltime
Universal Processor			4	--
Concrete cracking jaws			2	--
Hydraulic hammer			1	
Shear jaws			3	--
Grapple jaws			3	--
Material densifier			1	--
Instrumentation vehicle			2	2 fulltime
Grout pump truck			2	2 fulltime
Water truck 8,000-gal tank			1	1 fulltime
Truck; standard 40-ft flatbed with tractor			2	2 full-time
Pipe racks			18	--
Intact drum removal				
Drum-handling attachment for universal processor			2	--

Table 8-1. Equipment and Direct Operating Workforce Requirements. (sheet 4 of 5)

Work task	Quantity per containment structure	Spares	Total required	Workforce needs operators/shift
Pipeline removal, river				
Clamshell dredge			1	3 fulltime
Gamma scan mole; underwater Geiger-Mueller instrument			1	
Container barge and tug			1	3 fulltime
Underwater cutting torches			1	
Volatile organic compound venting equipment				
Trailer with vacuum pump, 1,000 stdft^3/min at 80-in. water vacuum; 3-MBtu/h vapor incinerator			1	1 fulltime
Low-temperature thermal desorber (see 300 Aggregate Area study report for specifications)			1	
Rail transport				
Diesel electric locomotive; 30,400 lb draw bar pull			3	9 fulltime (3 per train)
Flatbed cars with bulkheads			48	
Containers, reusable 50-yd^3 for low-activity wastes				
Type 1: With loading door (>12-in. material)			109	
Type 2: With loading ports for soil (<12-in.)			345	
Containers, single-use 50-yd^3 for high-activity wastes				
Type 3: With loading door for >12-in. material			8,042	
Type 4: With loading ports for <12-in. soils			12,495	
Overpacks				
Unshielded for Type 1 box			109	
Shielded for Type 3 and 4 boxes			23	

Table 8-1. Equipment and Direct Operating Workforce Requirements. (sheet 5 of 5)

Work task	Quantity per containment structure	Spares	Total required	Workforce needs operators/shift
Cranes				
Walking gantry crane rated at 100 tons (custom-built item)	1		3	6 fulltime (2 per crane)
Bridge crane rated at 100 tons (box loading into overpacks)	1		3	6 fulltime (2 per crane)
Bridge crane rated at 100 tons (container loading onto railcars)	1		3	2 fulltime
Truck-mounted articulating crane, 20-ton capacity	1		3	3 fulltime
Maintenance/other				
Heavy equipment maintenance	--		--	8 fulltime
General maintenance	--		--	5 fulltime
Observers				6 fulltime

NOTE: Fulltime = number of operators/shift; pool = on-call as required (not per shift.)

Table 8-2. Operations Support Workforce.

Job category	Per shift		
	Per operation	Number of operations	Total
Management/Administration	10	1	10
Decontamination	3	3	9
Health Physics	2	6	12
Field Engineers/Scientists	12	1	12
Health and Safety	2	3	6
Quality Assurance	1	6	6
General Laborers	2	6	12
Samplers	2	6	12

Containment systems will be expensive to build, operate, and maintain. The very large containment structures proposed for the 100 Areas are of a design that has not been demonstrated, even though all of the components are conventional. However, the sheer size of the structures will make for expensive construction, more so in material costs than in labor. In addition, the large structures will require high-capacity ventilation systems that, although they consist of conventional components, will be expensive to build because of size. Ventilation systems will also consume large quantities of HEPA filters, a continuing operating cost.

As discussed in Chapter 3.0, river pipeline removal costs are highly dependent on whether the sediments are found to be contaminated above cleanup levels. If they are, cofferdams might have to be constructed around the lines to contain sediments during excavation. Such measures would dramatically increase costs of removal as a result of dam construction and the need to containerize, dewater, and dispose of the contaminated sediments.

Although few buried drums are expected in the 100 Area burial grounds, if large numbers of intact drums were encountered, the buried waste excavation operations would slow significantly. Even though intact drums are subsequently handled off-line from the excavation, the unearthing of drums would have to be done slowly and carefully to preserve the integrity of intact drums. Rather than using large-capacity loaders for excavation, small-scale "one-by-one" drum handlers may have to be used. Although this is technically achievable with the proposed system, costs would increase as a result of slower excavation rates.

Materials such as pressurized drums, drums containing hydrogen (from radiolysis), drums containing highly flammable organics, compressed gas cylinders, and munitions could require additional requirements for special handling procedures, which may slow excavation. Although the 100 Areas are expected to contain little of these materials, discovery of large quantities could increase costs of buried waste excavation substantially. Alternative excavation schemes for buried wastes might have to employ remotely operated equipment (robotics). Such systems would probably require substantial technology development time and cost, and employment of such systems for buried waste excavation might result in substantially increased excavation costs.

8.4 SCHEDULE

An estimated schedule for 100 Area remediation is given in Figure 8-1. All years indicated are calendar years (CY). Activities that precede actual site remediation activities include engineering development and testing of the systems listed in Chapter 9.0; design, permitting, and program development activities; equipment procurement; and construction/field mobilization activities, which include the soil gas survey/soil venting activities as well as a period for shakedown and demonstration of field operations. The schedule indicates that these preremediation efforts can be completed by about mid-CY 1994.

Early site remediation activities include those that might proceed without need for containment structures, because containment structures might require development and demonstration extending into CY 1996. The schedule also indicates remediation of units that are not expected to be highly contaminated early in the schedule, so as to provide a means for ascending the "learning curve" on easier to remediate sites.

Based on 20 yr of site remediation, the schedule shows completion of all 100 Area sites by about the end of third quarter in CY 2016.

Equipment requirements for overburden removal are as follows:

- One 13-yd^3 front-end loader
- Five 75- to 85-ton dump trucks
- One instrumentation vehicle for real-time monitoring during stripping.

In the operations under the containment structures (three simultaneous operations), the working faces will be scanned regularly to determine the level of contamination present (see Section 3.1). This allows the uncontaminated material from the perimeter of the excavations to be kept separate from contaminated material so that the uncontaminated material can be stored for use as site backfill.

The system proposed for soil excavation will utilize large, mining-size front-end wheel loaders. Prior to placing a structure at any site, a significant volume (estimated to be the first one-third) of the uncontaminated overburden surrounding a contaminated area will be stripped off (see Figure 3-5). Large off-highway dump trucks (75- to 85-ton capacity), such as used in mining operations, will be used to transport soil to onsite storage piles during the excavation of overburden. After the first one-third of the overburden volume is stripped, the containment structure would be placed over the site. Then the estimated second one-third of the clean overburden volume would be excavated and transported out of the containment structure using the belt conveyors. This material would be trucked to the overburden stockpile. The last segment of overburden (estimated one-third of the total volume) is potentially contaminated since it is excavated near the contaminated areas. This material would be conveyed out of the containment area and placed into shipping containers for transport to the 200 Area disposal site.

In those sites that do not require movement of the containment structure (126 sites), the loaders will excavate all the material in 20-ft deep benches (see Figure 3-5); i.e., top-down excavation. However, in the case of the 30 sites where the containment structure needs to be moved at least once, it will only be possible to conduct the initial excavation in 20-ft benches. As the containment structure advances over the site, it will be necessary to excavate the full face. The full height of the bank could be greater than 50 ft depending on the site (based on assumptions concerning depth of contamination penetration). At these sites, it will be necessary to excavate from the bottom using bulldozers working in combination with the loaders, pushing material down from the top of the bank with bulldozers and scooping the material up at the bottom with the loaders (Figure 3-6).

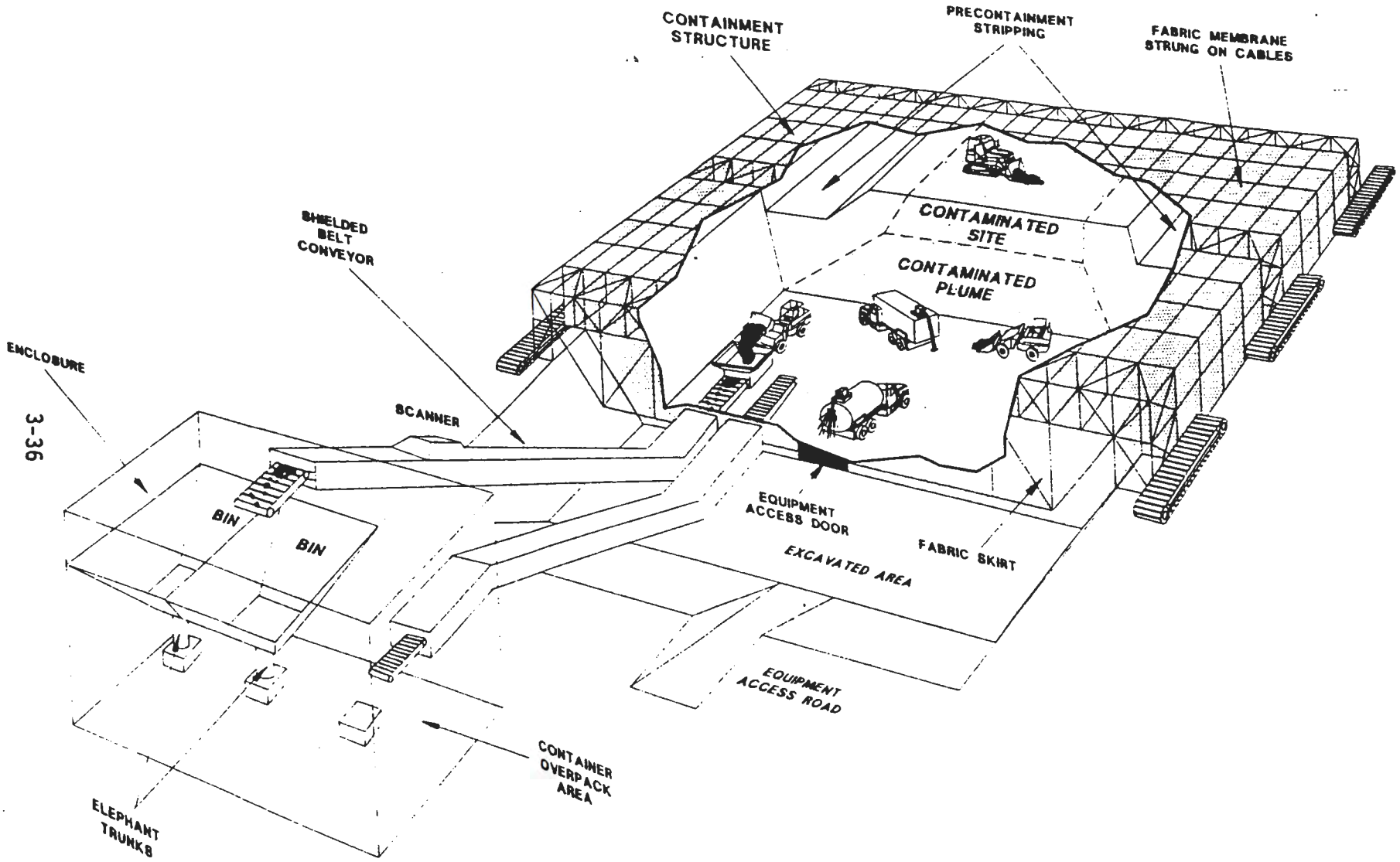

Figure 3-6. Contamination Excavation Operations.

Equipment requirements for each of the three containment systems operating simultaneously are listed as follows:

- One 13-yd^3 front-end loader
- One 7-yd^3 front-end loader
- One bulldozer
- One 8,000-gal water truck
- Two instrumentation vehicles.

All excavation equipment operating within the containment structure is expected to be conventional wheeled or tracked equipment currently available commercially. All control cabs will be fully enclosed. However, to meet as low as reasonably achievable (ALARA) requirements for radiation protection, control cabs will be modified to include radiation shielding and clean air supply. Shielding will consist of leaded glass windows and a lead lining on metal sections of the cab. The cab will be tightly sealed and provided with a positive-pressure air supply via an air compressor and HEPA filters built in to the tractor base. The supply air will be continuously monitored for contaminants to ensure worker protection. As a backup, self-contained breathing apparatus air supplies would be available inside the cab for emergency use.

The concept envisions that excavation equipment would remain inside the containment structure while a given site was being remediated; thus, no decontamination would be required. However, during containment structure movements to other sites, and as required for vehicle maintenance, equipment would require decontamination and/or enclosure before leaving the containment area. Decontamination would be carried out inside the equipment airlocks using conventional high-pressure water sprays to remove smearable contamination.

3.2.2.2 Conveyor Systems. Excavated soil will be transferred from the loader bucket to the conveyor system for transport out of the containment structure into shipping containers. The conveyor system will consist of the following elements:

- One primary 36-in. belt conveyor, 800 ft long
- One 54-in. apron feeder
- One feed hopper equipped with a 12-in. scalping grizzly
- One 36-in. belt conveyor, 200 ft long
- One 36-in. belt conveyor, 400 ft long
- One covered skid (for removal of oversized boxes from underneath the containment structure) equipped with a winch, bridge crane, and portable airlock for overpacking containers

Figure 3-7. Processor Attachments for Demolition Operations.

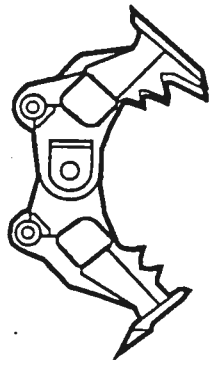

A. Concrete Pulverizer Jaws

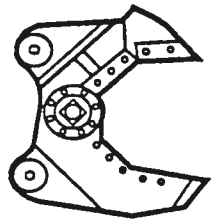

B. Shear Jaws

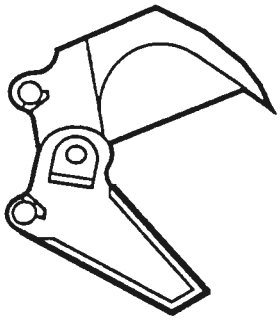

C. Wood Jaws

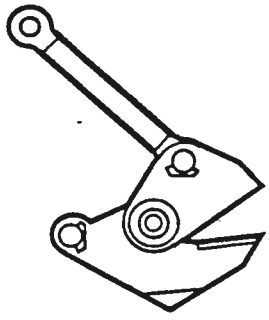

D. Plate Jaws

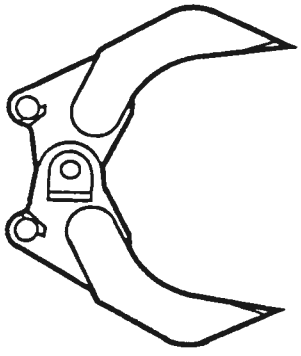

E. Grapple Jaws

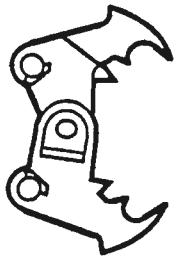

F. Concrete Cracking Jaws

H9204002.53

As tanks are dismantled, steel scrap will be loaded with continuous rotation grapples designed for handling bulky, irregular-shaped objects. One grapple attachment will be required for each tank. Grapple specifications are given in Appendix B.4.

3.3.2.3 Concrete Structures. Concrete structures such as retention basins, tunnels, and outfall structures will require extensive size reduction. Concrete pulverizer jaws or concrete cracking jaws are specifically designed to demolish concrete. However, because of size constraints of the jaw opening, a hydraulic hammer may be required to preprocess very thick structures before employing jaw-type attachments. The hydraulic hammer is a boom-mounted attachment that will break concrete into sizes more amenable to processing. Although hydraulic hammers will not be effective in cutting rebar, the shear attachments are very effective in this application.

Concrete processing attachments (cracker, hydraulic hammer, and shear) will be required during demolition of thick concrete structures such as the large retention basins, while only the cracker and shear will be required for demolition of other concrete structures.

The design specifications for cracking attachments and hydraulic hammers are provided in Appendix B.4.

The loaders will operate in tandem with the processors to remove and load demolished concrete into shipping boxes.

3.3.2.4 Land Pipelines. Steel pipelines with diameters greater than 24 in. will be cut to lengths transportable by rail on racks on the flatbed cars. Sections of pipe that contain high-activity contamination will be placed into Type 3 shipping boxes (see Section 3.4.1). However, it is anticipated that most pipelines will not require containerization and may be transported on racks. Pipelines are generally below ground to a maximum depth of 15 ft. Equipment performing pipe cutting and removal operations typically will be operated from ground level. The following sequence of operations is proposed for large pipes (arbitrarily defined here as pipes having a diameter greater than 24 in.).

1. Pipelines are first uncovered with backhoes

2. A processor with material densifier jaws will crimp the pipe (to the extent possible) at approximately 40-ft intervals

3. Crimped sections will then be cut using shear jaws

4. Each crimped end of pipe will then be capped (e.g., grouted with Gunite) to ensure a seal during handling and transportation. If there are large gaps to fill, wire mesh or other suitable backing material would be applied over the gaps before applying the sealant material. As an alternative to Gunite, it may be feasible to tape plastic sheeting over the ends to provide a seal. Use of plastic might be more effective and efficient than Gunite, although radiation levels would have to be low enough to allow contact handling

5. Gunite, if used as a sealant, would be applied at each end by a boom-mounted nozzle on a grout pump truck; the grout pump truck will also be used for stabilizing the soil surrounding leaking pipes, if necessary

6. Cut and capped pipe lengths will then be removed from the excavation trench and loaded either into transport containers (if high activity) or into trucks (if low activity) for transport to the nearest railhead. A processor with grapple jaws will be used for this purpose.

A conceptual sketch of pipeline excavation is shown in Figure 3-8. Pipelines with diameters less than 24 in. will be excavated and cut in a similar manner. Because the small-diameter pipe will be transported to the 200 Areas via shipping containers instead of railcar racks, grouting of the ends will not be necessary. The cut sections of pipe will be handled by a processor with grapple jaws and loaded directly into the shipping containers.

Several crews will be working simultaneously to excavate pipelines as follows.

- Two excavation crews will simultaneously uncover pipe, monitor for contamination, and stabilize "hot" spots with Gunite
- One crew will demolish manholes, junction boxes, tie-lines, and valves
- One crew will cut and remove pipe along with any demolished manholes, junction boxes, tie-lines, or valves.

Each excavation crew will require the following equipment:

- One 3-yd^3 backhoe
- One grout pump truck
- One instrumentation vehicle.

The crew performing demolition of manholes, junction boxes, tie-lines, and valves will require the following equipment:

- One excavator with universal processor
- One grout pump truck and one 8,000-gal water truck
- One instrumentation vehicle
- One each of cracker, shear, grapple and hammer attachments.

Figure 3-8. Removal of Buried Steel Pipelines on Land.

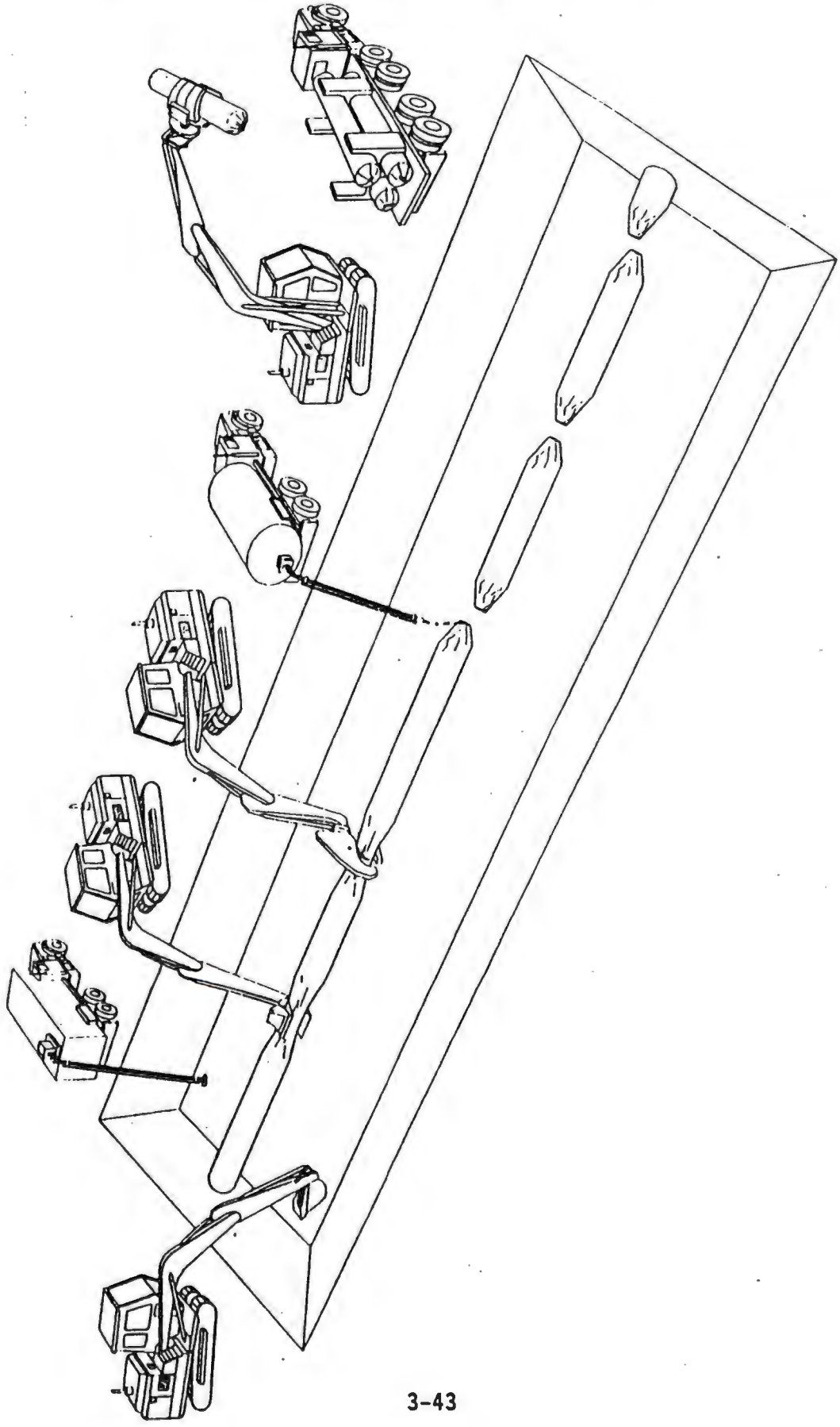

The pipe-removal crew will require the following equipment:

- One excavator with material densifier attachment
- Four excavators with universal attachments
- Three shear jaws
- Three grapple jaws
- Two concrete cracking jaws for concrete pipelines
- One hydraulic hammer
- Two grout pump trucks
- Two instrumentation vehicles
- One waste transport truck, as required
- One 8,000-gal water truck (for concrete pipe only).

Specifications of excavators and attachments required for pipeline-removal operations are given in Appendix B.4.

3.3.2.5 Timber. Early versions of cribs were constructed of wood timbers. Once the crib is uncovered, the timbers will be cut as they are being pulled out with a processor using wood-cutting jaws. This same processor can also be used to load the cut timber directly into transport containers. Appendix B.4 provides specifications of cutting jaws for timber applications.

3.2.4 Pipelines Under the River

Excavation and removal of pipelines buried under the river present very different challenges to 100 Area remediation and thus require special approaches.

Although the design of the effluent pipelines buried under the river varies for each reactor, the 100-D Area was used as a basis for conceptualizing design of the removal system. The 100-D Area river pipelines consist of two parallel 42-in.-diameter, 1/2-in.-wall thickness, steel lines buried under 3 ft of cover. The parallel lines are about 1,850 ft long and spaced about 4 ft apart.

It is anticipated that the pipelines and surrounding sediments are minimally contaminated, if at all. Nevertheless, the macroengineering approach requires that the remedial systems be relatively insensitive to contamination levels; i.e., capable of handling high contamination levels, if encountered. However, analysis of systems needed to excavate the river pipelines indicates that the complexity and cost of removing the lines are very much greater if the sediments are contaminated. The differences are so large that, in this case, a limited precharacterization of radiological and chemical contamination would be cost-effective. If such precharacterization shows pipe and/or sediment contamination to be a nonproblem, the excavation

would be straightforward and relatively inexpensive. However, if sediments are found to be contaminated at levels exceeding cleanup standards, the river must be protected from spreading contamination during excavation, and thus the complexity and cost of the removal approach would increase dramatically.

The approach to precharacterization would begin with a gamma scan at the pipe interior wall by pulling cable-mounted "moles," containing gamma-detection instruments, through the pipe. Gamma-logging technology is well developed and used extensively for logging of boreholes. The gamma scan would measure the relative gamma activity at the pipe surface and at least 1 ft into the surrounding sediments. The scanner would be capable of traversing the entire pipe circumference. This scan would determine only if any contamination was present and would indicate locations of the "hot spots." It would not determine whether the contamination exceeds cleanup levels. Following the gamma scan, the sediments would be sampled at all "hot spots" and at random points along the line. Vacuum devices operated from above the surface of the river bottom would be used to extract samples. The sediment samples would be analyzed in the mobile laboratory for radionuclides and metals; e.g., chromium. If the sediment analysis shows no contamination above the cleanup standards, the pipe would be excavated using a straightforward approach as described in Scenario 1.

If the sediments are contaminated at levels exceeding the cleanup criteria, the pipelines and sediments would be excavated according to Scenario 2, described in Section 3.2.4.2.

3.2.4.1 Scenario 1. This scenario assumes that no contamination exceeding the General Use cleanup standards is present in either the pipe or surrounding sediments. Excavation would proceed using barge-mounted equipment such as clamshell excavators and cranes.

Utilizing a clamshell for dredging will offer the following advantages:

- Unlimited dredging depth
- Dredging of coarse and/or compacted material
- Minimal water removal, as compared to slurry-type removal
- Maximum dredging accuracy
- Low maintenance cost
- Semiautomated operations requiring one operator
- Continuous production
- High capacity.

This mode of excavation would not containerize the sediments but would return the excavated sediments to the river bed. Only enough sediment would be excavated to allow the pipe to be lifted by hook or grapple so that it could be cut. The pipe would be cut into transportable lengths using underwater cutting torches. Pipe would be transferred to railcars from the barges via crane and shipped to the 200 Areas for disposal as nonradioactive, nonhazardous material; i.e., contamination is below cleanup standards.

Disturbance of the river sediments could release silt, which may impact aquatic life.

3.2.4.2 Scenario 2. This scenario assumes that the sediments are contaminated above the General Use cleanup standards and that the excavation must be carried out in such a manner as to prevent dispersion of excavated sediments into the river.

In this scenario, a cofferdam would be constructed to surround the entire pipeline system. The cofferdam would be constructed of standard sheet piles to provide a slack-water environment for excavation. A conceptual sketch of the cofferdam and excavation approach is given in Figure 3-9. A minimum penetration depth of 10 ft below the measured depth of contamination would need to be attained by the sheet piles. The measured depth of contamination would be determined by the sediment presampling. The width of the dammed portion would be sufficient to support the excavation but no wider or deeper than needed to remove the sediments that exceeded cleanup standards (as determined by the presampling).

After installation of sheet piling, the sediments would be excavated using a conventional clamshell dredge. Excavated sediments would be stored temporarily in modified 50-yd^3 shipping boxes for dewatering and sampling. Dewatering of the sediments would be accomplished by gravity settling of the sediments in the boxes. The boxes would be specially equipped with water drains and silt filters to drain water back into the dammed area. After dewatering, the boxes would be sampled manually using thief sampling tubes. Sediments that were not contaminated above cleanup standards would be returned to the river bed outside of the cofferdam. Sediments exceeding cleanup standards would be transported ashore onto railcars using cranes and shipped to the 200 Areas for disposal. After sufficient sediment is removed from around the pipeline to lift the line, the lines would be lifted by the dredge crane and cut using underwater torches. The choice of lifting and cutting devices would depend on the level of contamination; i.e., whether contact handling could be allowed. It is anticipated, however, that the pipe would not be contaminated to an extent that would preclude contact handling.

Following extraction of the pipeline, excavation of sediments would proceed until cleanup standards were met. Field measurement will be confirmed and correlated with mobile laboratory analytical data. If necessary, additional sections of sheet piling would be driven outside the line of the original sheet piling to allow deeper excavation. Real-time measurement of radiation levels and sediment sampling would be accomplished using the same types of devices and methods used for excavation on land. However, waterproof GM detectors would be required for underwater operation. Sheet piling would be reused unless contaminated, in which case it would be scrapped.

Figure 3-9. Pipeline and Sediment Removal: Scenario 2, Pipelines Under the River.

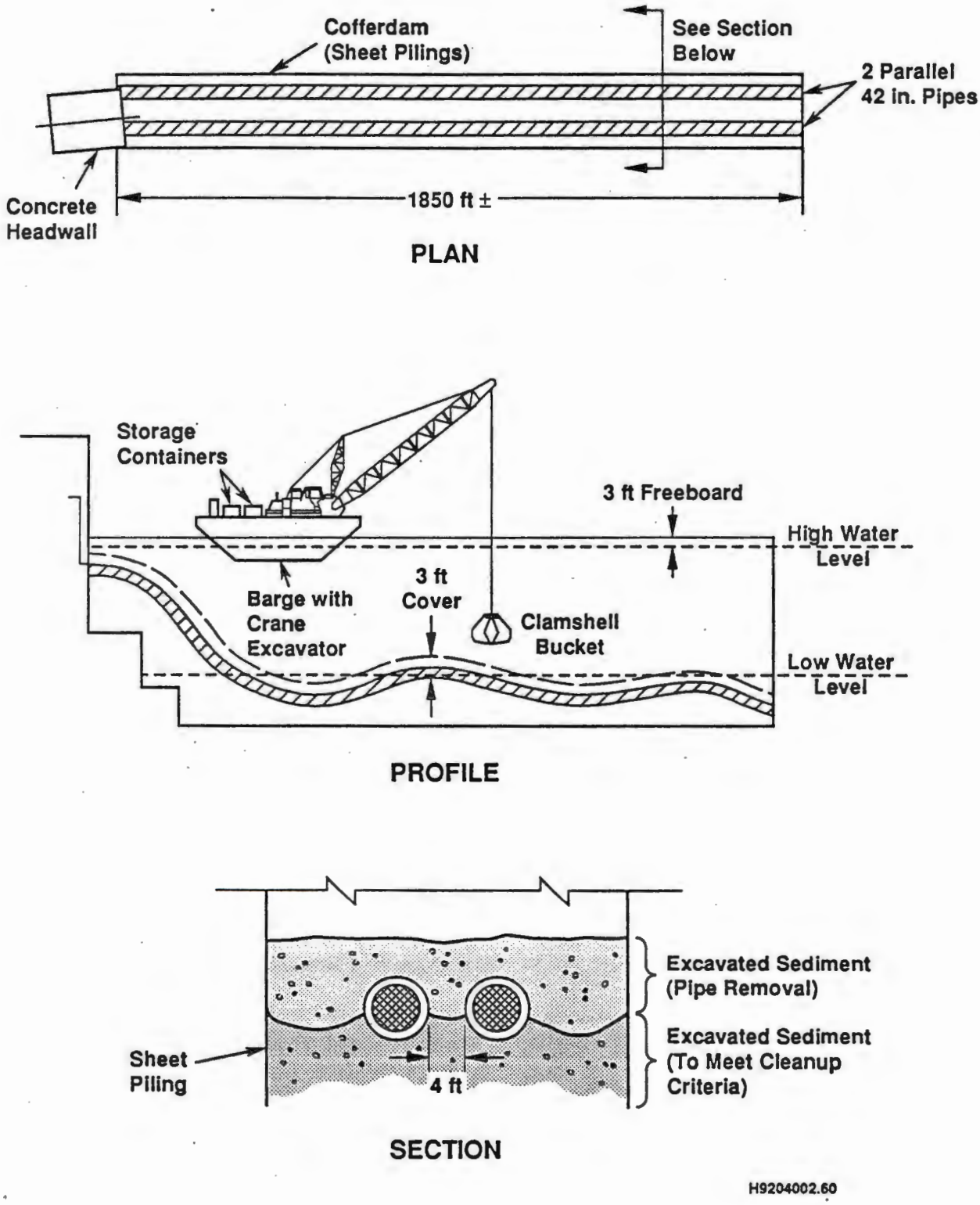

Following completion of excavation of sediments and pipelines, the water inside the cofferdam would be sampled and analyzed for radionuclide content. The water is expected to be acceptable for release into the river (i.e., meeting the groundwater cleanup criteria) because data on soil washing have shown that radionuclides adsorbed on sediments are not very soluble in water. However, if the water were contaminated at levels exceeding cleanup standards, it would require treatment before river discharge. If this is necessary, the best alternative would be to pump it to the groundwater treatment system being used to remediate 100 Area groundwater.

One potential problem with the sheet piling may be leakage at joints. Engineering design/development would be required to mitigate this problem.

As an alternative to construction of the cofferdam around the whole pipeline, it may be feasible to construct smaller dams around the contaminated areas if the precharacterization sampling shows only a few localized zones of contamination.

Finally, as an alternative method of pipe removal, it may be possible to winch the entire pipeline (after uncovering) onto land so that it might be handled similar to the land pipelines.

3.3 ONSITE PROCESSING SYSTEM

This section describes approaches and systems for processing of excavated wastes to reduce size or segregate soils or waste forms by size, to achieve volume reduction of wastes, and to remove VOCs before shipment of wastes for 200 Area disposal.

3.3.1 Size Reduction/Segregation

The 200 Area disposal site will require that delivered waste be segregated, at a minimum, according to its radiation level and/or TRU content; e.g., high-activity/TRU waste will be segregated, transported, and disposed of separately from low-activity waste. High-activity waste is considered greater than 200 mrad/h or 100 nCi/g total alpha. Uncontaminated soils (e.g., overburden) will be kept segregated from contaminated soils and stored onsite for use as excavation backfill. The categories of wastes to be segregated at the excavation sites are summarized as follows.

Uncontaminated soil	Stored for backfill in piles
Low-activity soil and other wastes	Shipped in reusable boxes within unshielded reusable overpacks
High-activity soil and other wastes	Shipped in single-use boxes within reusable shielded overpacks
Intact drums	Shipped as-is or in boxes with or without shielded overpacks depending on condition and activity level

Large pipe sections	Shipped as cut lengths and wrapped. High-activity pipe would be placed in single-use boxes and shipped in shielded overpacks

Consistent with the basic premise of the low-technology approach to 100 Area remediation, size reduction will occur only to the extent necessary to facilitate waste transport. Because contaminated soil will be transported from the excavation face to shipping containers using rubber-belted conveyors, it will be necessary to remove large boulders (greater than 12 in. in diameter). This will be accomplished via an inclined grizzly screen at the inlet to the conveyor feed hopper. The loader dumps the bucket of soil onto the grizzly, whereupon the oversized boulders roll off into an adjacent apron. Upon accumulating sufficient quantities of boulders on the apron, the boulders would be screened for activity level and then loaded into the appropriate shipping container; i.e., for either high-activity or low-activity oversized objects.

Large-diameter pipe will be extracted from the ground and cut into transportable unit lengths using cutting systems described in Section 3.2.3.

Concrete, steel, and wood demolition rubble will be size reduced using the special tools described in Section 3.2.3 to the extent that the material fits inside the shipping boxes.

No sorting of buried wastes will occur except for the purposes of defining contamination levels, with the exception of intact buried drums. Intact drums will need further inspection to determine if they contain VOCs. Intact drums will be excavated, set aside within the excavation structure, and further handled "off-line" to avoid excavation delays.

Intact drums that are set aside from the main excavation operation will be opened inside the containment structure (contact handled if radiation levels are acceptable), sampled, and analyzed for volatile organics. Drums not containing volatile organics will be placed into shipping boxes for removal to the 200 Areas. Drums containing volatile organics will be overpacked into salvage drums, if necessary, and trucked to a special facility that will treat drummed waste containing organics by low-temperature thermal desorption. A description of such a treatment facility is included in the study report for the 300 Aggregate Area.

Drums that cannot be contact handled will be punctured and analyzed for volatile organics remotely using the special tractor-boom tools. After analysis, the high-activity drums that do not contain VOCs will be remotely overpacked, placed in the appropriate high-activity shipping containers, and shipped to the 200 Areas for disposal. High-activity, VOC-containing drums will be shipped to the drum-processing facility in shielded overpacks.

3.3.2 Volume Reduction

Because the basic premise of the 100 Area remediation was to follow a low-technology, high-volume throughput approach, no volume-reduction systems are proposed for the 100 Areas. Additional rationale for this approach is discussed in Chapter 5.0.

3.3.3 Organics Removal

Wastes containing concentrations of VOCs in excess of the cleanup criteria must be processed to remove VOCs either before excavation or before shipment of the waste to the 200 Areas.

As discussed in Section 3.3.1, drummed wastes containing VOCs that exceed cleanup standards will be shipped to the drum-processing facility. It is anticipated that very few, if any, drums will require processing for organics removal. Available data indicate that use of volatile organic solvents was not routine practice in reactor operations. There are also no indications that drums were used routinely to dispose of wastes. Most buried wastes are either soft wastes (such as clothing and rags) buried in cardboard boxes, or hard wastes (such as failed equipment), which were either directly buried or buried in wooden boxes. However, for estimating purposes, it is assumed that a total of 500 intact drums will be encountered in the 100 Areas during the 20-yr cleanup period. This averages to 25 drums per year or about 2 per month, although actual short-term rates would be higher when excavating burial grounds. All 500 intact drums are assumed to contain free liquids that would be sampled and analyzed to determine VOC content. It is assumed that half of the drums will contain VOCs requiring processing in the drum-treatment facility.

The alternative selected for volatile organic treatment of 100 Area soils and nondrummed buried wastes is in situ soil venting. This technology is also known as soil vapor extraction (SVE) or vapor extraction system (VES). Soil gas surveys will be performed in advance of soil venting to determine which areas need the in situ treatment.

Soil gas surveys will be conducted only in areas in which disposal records or groundwater monitoring data show to have been potentially contaminated with volatile organics. Currently available data indicate that there are relatively few sites in the 100 Areas where VOCs might be suspected. For estimating purposes, it is assumed that 20 waste sites will be subjected to surveys.

The surveys will be conducted using the Petrex technology. Details of the technology are given in Appendix B.1. Small tubes (static collectors; Figure 3-10) that contain an organic adsorbent (charcoal) are placed just below the soil surface on a grid spacing of about 50 to 100 ft. The tubes are left in place for a period of time (1 to 2 weeks) until detectable quantities (if any) of volatile organic chemicals emanating from the soil are adsorbed in the tubes. Tubes are then collected and analyzed by a mass spectrometer, located in the mobile laboratory, to indicate type and concentration of organic chemicals present. Results of the grid survey are then used to map the approximate areal extent of soil contaminated with volatile organics. Closer grid spacings can be used, if necessary, in areas of known contamination or where more precise definition of areal extent is needed.

For estimating purposes, it is assumed that 100 grid points on a 50-ft spacing will be used in each of the 20 site surveys, totaling 2,000 measurements.

Figure 3-10. Static Collectors for Soil Gas Surveys.

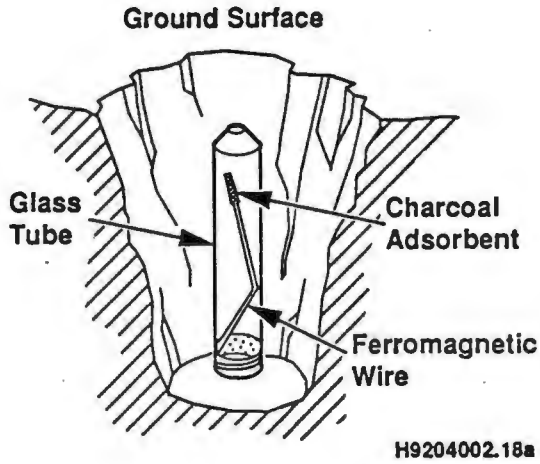

Following the soil gas survey, the affected areas are then subjected to in situ soil venting. This well-developed technology uses small-diameter vertical pipes drilled into the ground at a spacing that varies according to the permeability of the soil, usually about 50 to 100 ft. Figure 3-11 is a conceptual diagram of the in situ venting system. The extraction pipes are connected with surface piping to a vacuum pump that draws air through the contaminated soil. The air flowing through the contaminated soil volatizes the organic chemicals into the air stream. At the surface, the pumped air containing the volatile organics is treated in a truck-mounted vapor incinerator, which destroys the organic compounds. Venting is continued until the concentration of chemicals is reduced to acceptable levels. The vacuum extraction wells are removed during the excavation phase.

For estimating purposes, it is assumed that half of the sites (10) will require in situ soil venting before excavation. The assumed capacity of the vacuum pump is 1,000 stdft^3/min at 80 in. of water vacuum, and the corresponding capacity of the liquid propane gas-fired incinerator is 3 MBtu/h.

As a contingency, if during excavation additional pockets of volatile organic contamination (above cleanup limits) are found, the soil will be removed and containerized in shipping boxes fitted with air piping such that soil venting via the truck-mounted vacuum pump and vapor incinerator could be accomplished on the excavated soil before shipping. A concept diagram is provided in Figure 3-12.

3.4 ONSITE WASTE TRANSPORTATION TO 200 AREA DISPOSAL FACILITY

Rail transport was chosen as the preferred alternative for shipping excavated waste materials to the 200 Areas.

Containers and handling systems from rail and sea shipping industries are readily available for the purpose of this project with only minor modifications (e.g., see United Nations 1973). Details of container and transport systems are given in the following sections.

3.4.1 Waste Packaging

A standardized steel container of approximately 50 yd^3 internal volume (24 ft long by 8 ft wide by 7 ft high) has been selected for the purposes of this study. The package will be equipped with lifting and securing fittings for handling and transportation purposes. The container will also provide interim storage for wastes.

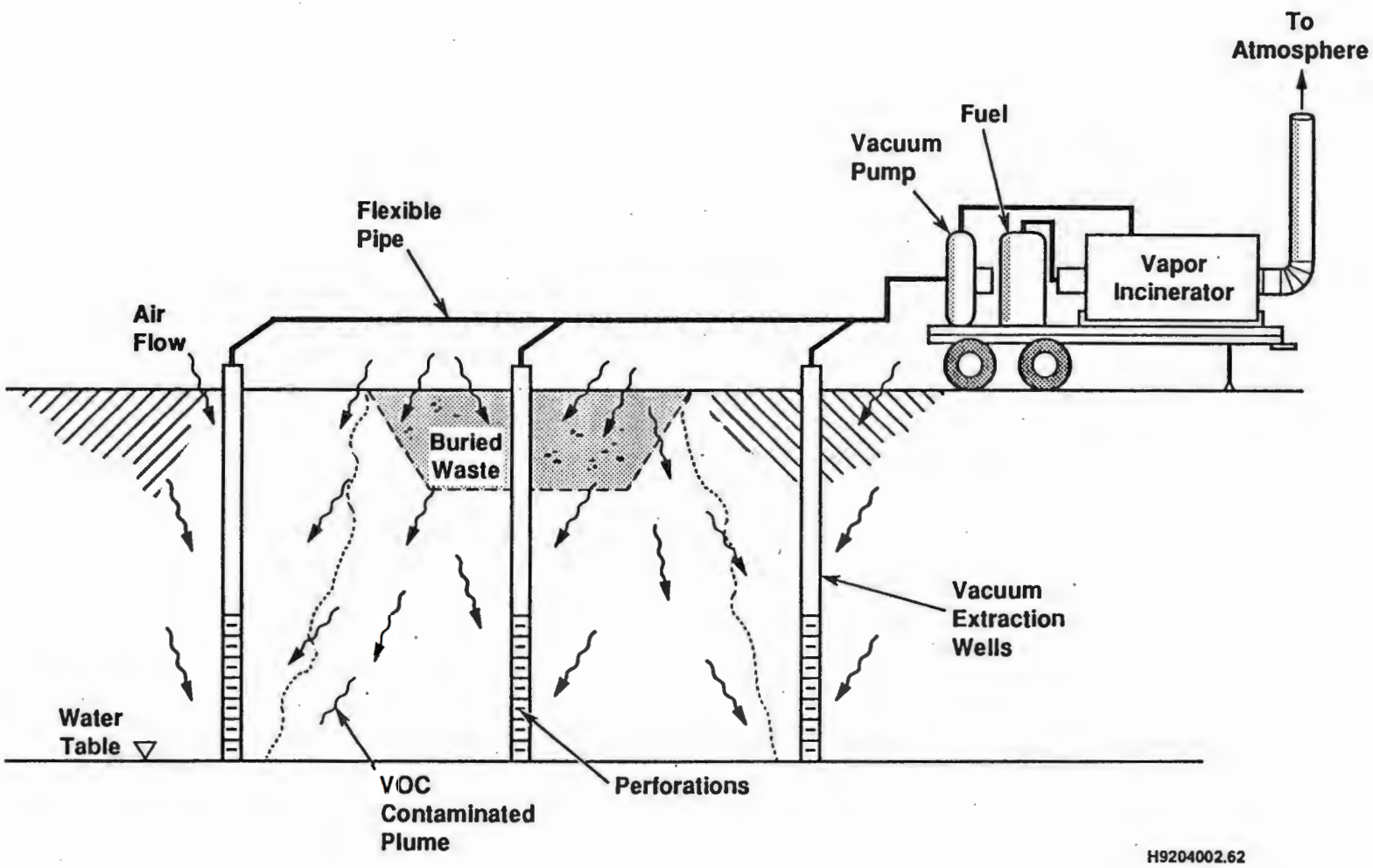

Figure 3-11. In Situ Soil Venting for Removal of Volatile Organic Compounds.

Figure 3-12. Soil Venting in Shipping Containers for Removal of Volatile Organic Compounds.

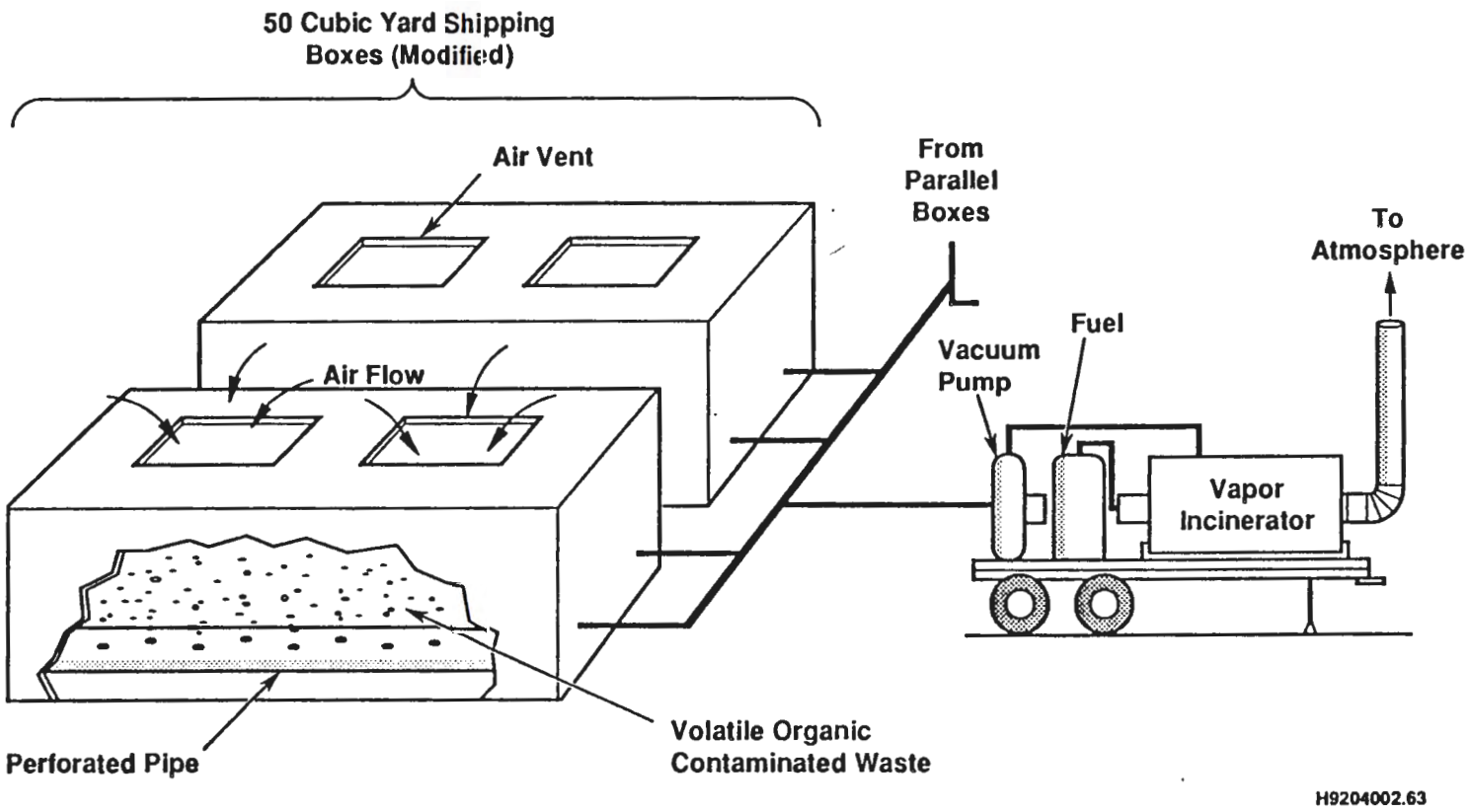

Four configurations of 50-yd^3 containers will be required to allow for differences in waste form and activity levels:

- Type 1: For low-activity, large-sized waste forms (greater than 12 in.); container has a top-loading door and side discharge gate; container is reusable (Figure 3-13)

- Type 2: For low-activity soils (i.e., particle size less than 12 in.); container has loading ports on top and a side discharge gate; container is reusable (Figure 3-13)

- Type 3: For high-activity, large-sized waste forms; container has a top-loading door (as in Figure 3-13) but no discharge gate; container is for single use (nonreusable)

- Type 4: For high-activity soils (i.e., particle size less than 12 in.); container has loading ports on top (as in Figure 3-13) but no discharge gate; container is for single use.

The discharge gate on Type 1 and 2 containers (the reusable containers) will consist of a hinged plate secured at the bottom of the container with bolts or latches used to secure the gate. This design will allow for discharge that can be controlled by tilting the container until all material is emptied. A leak-tight seal for the gate will require engineering development. The containers that have soil fill ports at the top (Types 2 and 4) will allow for rapid dust-contained filling via an "elephant trunk" clamped to the port.

Container overpacks will be provided for shielding of high-activity (Types 3 and 4) containers during transport. Unshielded overpacks will also be used for shipping Type 1 containers. Although Type 1 containers are low-activity waste forms, these are filled from inside the containment structure and thus will potentially have contaminated exterior surfaces. Using the overpacks will eliminate the need to decontaminate the surfaces before the containers are shipped.

Type 1 and 3 containers would be placed in the overpacks by winching the containers out of the containment area through an airlock and placement of the container into the overpack via crane. Type 4 containers, loaded via the soil feed bins, would be lifted into the overpack via crane.

Overpacks essentially will be an oversized steel box (slightly larger than the shipping containers) with a steel lid that is hinged so that it can be closed and latched after the container is placed inside. All sides of the shielded overpack would be lined with a 1-in. thickness of lead.

Figure 3-13. Shipping Container.

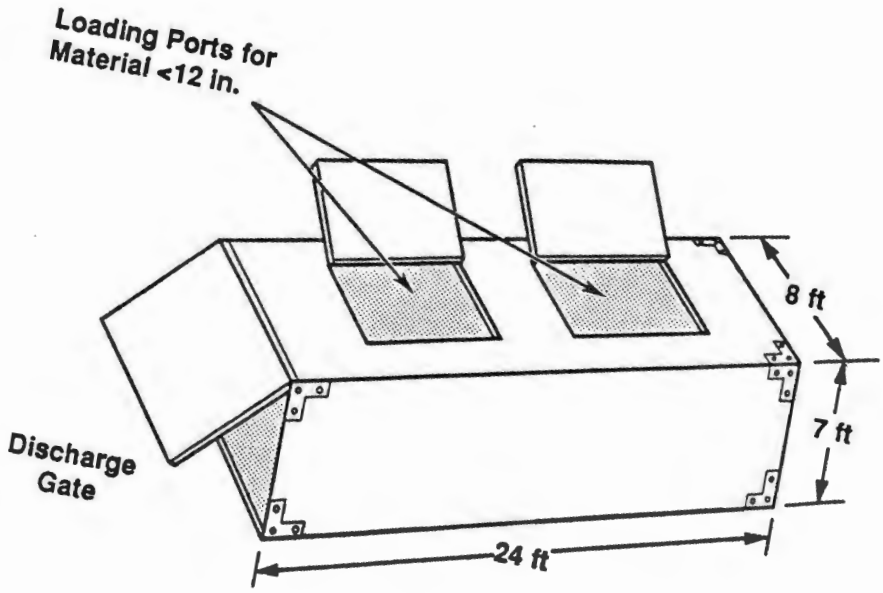

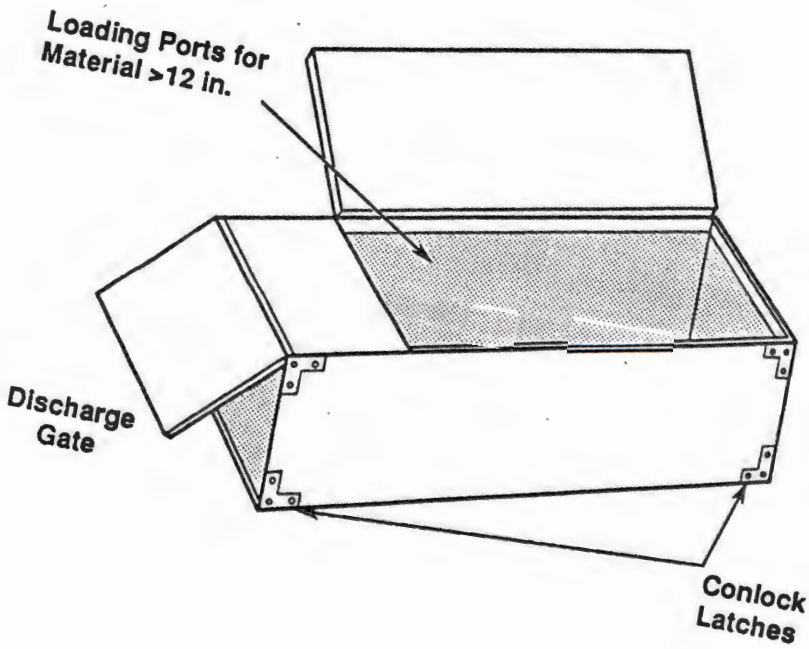

H9204002.64

Quantities of containers are specified to meet the required excavation rates and allowing for storage, delays, and contingency. Recommended container counts are as follows:

- Type 1: 109 reusable
- Type 2: 345 reusable
- Type 3: 8,042 nonreusable
- Type 4: 12,495 nonreusable
- Unshielded overpacks: 109 reusable
- Shielded overpacks: 23 reusable.

Equipment for handling containers will include mobile gantry cranes (Figure 3-14) for moving containers to railcars, a portable bridge crane for lifting containers onto and off of railcars, winches for pulling containers out of the excavation area, and scissor lifts to tilt containers when emptying at the 200 Areas disposal site. Such equipment is readily available in the rail and shipping industry.

Containers are secured on the flatbed railcars using devices called Conlocks. These are commercially available and are very common in the shipping industry for securing containers onboard a ship. The Conlock, illustrated in Figure 3-15, can be easily opened and closed thereby allowing for rapid loading and unloading of the containers.

Large pipe (24-in. diameter and larger) will not be containerized unless contamination exceeds the activity criteria. The pipe will be shipped on open racks on railcars. The pipe will be moved to the railcars via trucks and loaded onto the railcars via cranes. The racks will be fastened to the railcars using the Conlock device. Each rack of pipe will be covered with heavy plastic sheeting secured with tie-down straps. The plastic sheeting will be single use; i.e., the sheeting covering each load will be disposed of with the pipe. The purpose of the plastic sheeting is to minimize the potential for fugitive airborne releases of radioactive particulates during transport. High-activity pipe will be cut to fit the Type 3 single-use boxes and shipped as high-activity waste. Pipe that is smaller than 24 in. in diameter will be cut to fit Type 1 (if low activity) or Type 3 (if high activity) shipping boxes.

Figure 3-14. Gantry Crane Container Mover.

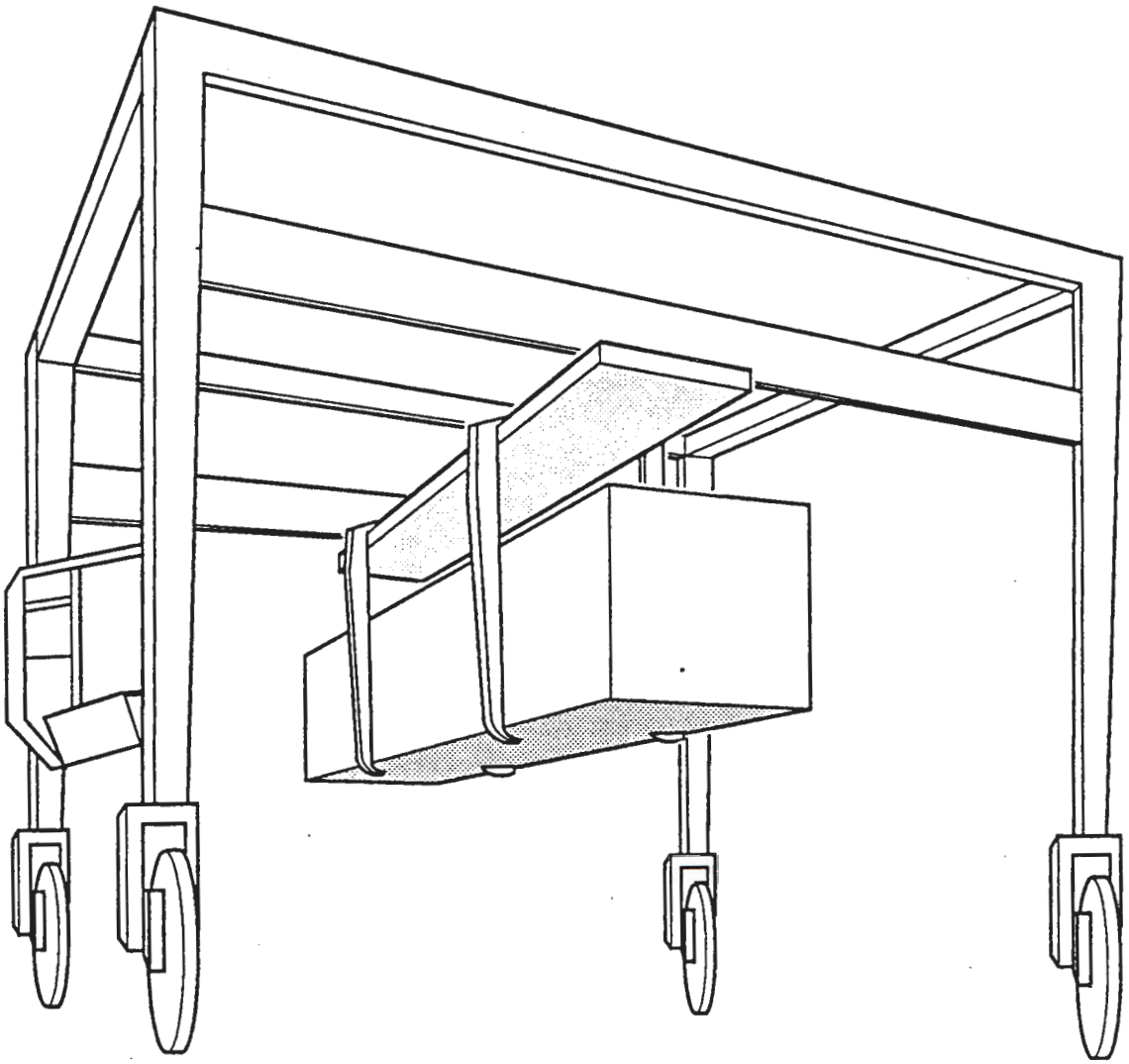

H9204002.61

Figure 3-15. Conlock Device for Container Securing on Rail Cars.

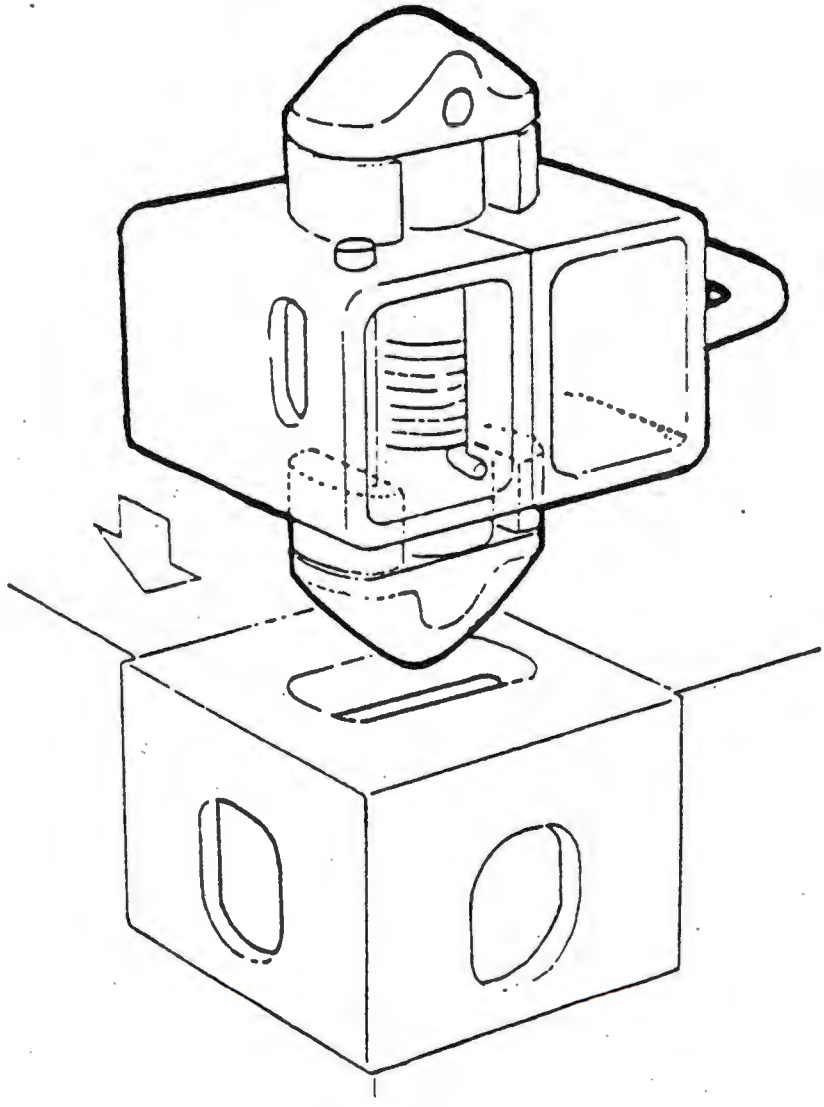

3.4.2 Waste Transportation System

The contaminated waste containers will be transported to the 200 Areas on conventional bulkhead flatcars. The Hanford Site is already equipped with an extensive rail network servicing each of the 100 Areas. Only minimal additional trackage is anticipated, because rail spurs are already located near enough to provide ready access to virtually all of the sites. Additional track (e.g., sidings) will be required to allow multiple trains (three) to move back and forth between the 100 and 200 areas. The concept envisions movement of containers to cars on existing spurs using the gantry cranes for short distances or trucks for longer distances. If necessary, sites would be graded to provide level surfaces for cranes operating between the excavation area and the railhead.

The conceptual design of the rail transportation system is based on the following assumptions and specifications:

- Average shipping rate of approximately 600 tons/h
- Operation is 2 shifts/day, 5 days/week, 6 months/yr; and 1 shift, 5 days/week, 6 months/yr
- Average round-trip distance is 30 mi from the 100 Areas to the disposal site in the 200 Areas
- Average speed of 15 mi/h for loaded railcars and 20 mi/h for empty cars on the return trip
- Average loading of containers is 80% of their full capacity
- Railcars are 100-ton capacity, all-welded design.

To meet the required transportation rates, it is estimated that a total of 3 freight trains with approximately 13 to 16 cars per train will be required. The methodology of this estimate is based on Hay (1977) and is detailed in Appendix B.5.

Three diesel-electric locomotives each with at least 30,400 lb of draw-bar-pull will be required.

3.5 SAMPLING AND ANALYSIS FOR SITE CERTIFICATION

Site certification will be achieved by collecting near-surface soil samples at random points in the excavated pits prior to backfilling. Sufficient samples will be taken to produce a valid representation of the area formed by the excavation. The collected samples will be analyzed in fixed laboratories using accepted methods and full QA/QC. Once results have been received, interpreted, and validated, they will be reported to the regulatory agencies. Upon certification by the lead agency that the site had been remediated to acceptable levels, site restoration will commence.

For cost purposes, the estimated number of samples for site certification is calculated as follows:

- There are 156 sites with an average crest area of 400 by 400 ft. Assume nine samples per site (approximately 100-ft spacing) taken at a 0- to 5-ft depth at the bottom of the excavation. Assume 10% additional samples for QA/QC. The total number of samples is thus calculated to be 1,544 samples.

3.6 SITE RESTORATION

When a complete area, such as 100-H, has been remediated, site restoration operations will commence. The excavations will first be backfilled to the extent possible with the uncontaminated material separated and stockpiled during overburden excavation. Because the contaminated material from the site, together with one-third of the associated uncontaminated or potentially contaminated overburden, has been shipped to the 200 Areas, the stockpiled material will not be sufficient to backfill the excavation completely. Depending on the size and shape of the contaminated site, the backfill operation would leave unfilled excavations varying in depth from 8 to 38 ft deep. The wider and deeper the contaminated site, the greater the depth of excavation that would be left unfilled.

After all the uncontaminated material has been returned to an excavation, the remaining side and end slopes would be reduced by recontouring and compacting to a maximum steepness of one vertical foot to three horizontal feet. The actual design of contours and degree of compaction will depend on the intended use of the land. For example, if the site were to be restored for industrial use, high compaction and level surfaces would probably be specified. Loaders and dump trucks would be used to transport the fill material from the stockpiles to the excavation; bulldozers would be used for spreading the fill and reducing slopes.

After backfilling, recontouring, and compacting have been completed, topsoil would be spread on the disturbed areas to a minimum depth of 6 in. It is assumed that clean topsoil will be imported from elsewhere on the Hanford Site and trucked to the excavation sites. The total area of the excavations is estimated to be about 549 acres (see Appendix A.4). Assuming application of 6 in. of topsoil over this area, it is estimated that about 443,000 yd^3 of topsoil would have to be imported.

Following the spreading of topsoil, the areas to be reseeded would be scarified on the contour to a depth of 12 to 18 in. using motor graders or suitable farming implements. Scarification would serve to bond the topsoil with the fill material and to aid in moisture penetration and retention. Additionally, the roughened surface would help to minimize wind and water erosion while the vegetation is being established.

After scarification, the final step in seed-bed preparation would be contour ripping on sloping ground. This activity is designed to retard erosion and assist with water retention for plant growth. The spacing interval between furrows will depend on the length and steepness of the slope, ranging from 25 to 50 ft. For this work, a bulldozer (the same type as used for excavation work) with a single ripper-tooth would be employed.

Reseeding of the prepared areas would be carried out using an appropriate mixture of native species sown at an appropriate rate of pure live seed per acre. The seed should be applied with a range drill working on the contour. The depth that seed would be planted would vary depending on the size of seed and type of soil, generally ranging from 0.5 to 0.75 in. Situations may arise in which the seed would have to be broadcast. In these cases, the seeding rate would be doubled and a harrow used to cover the seeds. The final landforms would be mulched and seeded with a cover crop in the early spring, and the final seeding would follow in the late fall. Fertilizer would be applied, when necessary, during the second spring after planting.

A conventional agricultural irrigation system will be installed and operated for one to two growing seasons to allow the planted grasses to become established. Once the grasses are established, the irrigation system will be dismantled and moved to other sites, allowing the revegetated areas to exist under natural conditions.

4.0 ENGINEERED SYSTEM TO IMPLEMENT THE INDUSTRIAL USE OPTION

For remediation of 100 Area soils, the General Use and Industrial Use options differ only in the cleanup standards; i.e., the industrial use cleanup standards are generally less stringent than those applied to the General Use Option.

As discussed in Chapter 1.0, similar to the General Use Option, the Industrial Use Option assumes that the site will be cleared of buildings, subsurface structures, buried wastes, and pipelines, regardless of their level of contamination. However, for the Industrial Use Option, soil removal will follow less stringent standards. Thus, the only differences in the volumes of materials to be removed will be in excavation of soil. Further, because in many cases the excavations will not have to be as deep for the Industrial Use Option, less overburden (for side slopes) will have to be removed.

As given in Chapter 7.0, the differences in excavation volumes for the Industrial and General Use options are summarized as follows.

Waste type	General use (Mft^3)	Industrial use (Mft^3)	Difference (Mft^3)	Ratio, industrial: general
Overburden	517	171	-346	0.33
Contaminated soil	284	36	-248	0.13
Demolition waste	57	57	0	1
Metals	46	46	0	1
Buried wastes	46	46	0	0
Totals	950	356	-594	0.37

Details of volume calculations for the Industrial Use Option are given in Appendix A.4.

As in the General Use Option, it is estimated that about two-thirds of the overburden can be stockpiled for use as site backfill, and the remaining one-third is shipped to the 200 Areas because it is potentially contaminated. Thus, the volumes of waste materials shipped to the 200 Areas for the Industrial Use Option are listed as follows.

Waste type	Volume (Mft^3)
Overburden	57
Contaminated soil	36
Demolition waste	57
Metals	46
Buried wastes	46
Total	242

The total waste quantity transported to the 200 Areas (242 Mft^3) compares to 606 Mft^3 for the General Use Option or about 40%.

Of the 242 Mft^3 shipped to the 200 Areas for the Industrial Use Option, the quantity of high-activity material is the same as for the General Use Option (about 22 Mft^3).

The engineered system to implement the Industrial Use Option is identical to the General Use Option. However, because smaller volumes of soil are involved, any of the following scenarios could result.

1. Site cleanup could be completed in less time, assuming use of the same quantity of resources

2. Cleanup would occur in the same amount of time, but fewer resources (equipment and workforce) would be required

3. A combination of Scenarios 1 and 2.

In the first scenario, cleanup in less time, the schedule driver would relate mostly to excavation of contaminated soil. Although the difference in overburden volumes is substantial, overburden excavation can be done relatively quickly, thus, it is not a major schedule driver. In contrast, contaminated soil excavation is slower and thus constitutes the rate that determines the difference between the two use options. Excluding stockpiled clean overburden, the total volume of contaminated material for the Industrial Use Option is about 40% of the volume for the General Use Option. Thus, a reasonable estimate of a reduced schedule for the Industrial Use Option would be 40% of 20 yr or about 8 yr.

In the second scenario, use of fewer resources, the same logic applies on the ratio of contaminated soil volumes. In this case, the impact would be roughly two simultaneous (parallel) excavation operations rather than the three estimated for the General Use Option. In simple terms, all equipment and workforce counts would be reduced by about one-third in this scenario.

The third scenario would, of course, combine schedule and resource tradeoffs to both shorten the schedule and use fewer resources, but to some lesser extent than either of the first two scenarios.

5.0 OTHER SYSTEMS AND COMPONENTS CONSIDERED

5.1 RATIONALE FOR SELECTED SYSTEM

To select systems for the 100 Area remediation, a panel meeting of IT Corporation engineers and scientists was convened to establish, discuss, and evaluate objectives, criteria, and alternatives and to reach a consensus on the alternatives that best met the criteria and study objectives. The general approach is summarized as follows. More detail on the selection process is given in Appendix C.

- Identify key technical requirements of the systems and establish activity-specific objectives
- Establish criteria:
  - "Must" criteria: "go/no-go" criteria that must be met for the objectives to be satisfied
  - "Want" criteria: criteria that are desirable but not essential
- Rank the "want" criteria in order of importance
- Identify the alternatives that are judged to be applicable
- Evaluate the alternatives against each of the criteria. An alternative that fails any "must" criterion is immediately eliminated. Of the remaining alternatives, the one that best meets the "want" criteria is selected.

The following sections summarize the results of the evaluation for each grouping of remedial activities. Each section identifies all the alternatives considered, discusses the rationale for selection of the preferred alternative, and briefly summarizes the rationale for rejection of the alternatives dismissed.

5.1.1 Soil Excavation

Criteria

Must: Alternative capable of

- High rates of excavation
- Depths greater than 50 ft
- Meeting ALARA requirements
- Compatible with feeding of conveyors.

Want: In order of importance

- Highly selective excavation control
- Reliable/low maintenance
- Low cost

- Commercially available with minimal modification
- Low overhead clearance required
- Transportable and highly maneuverable
- Electrically powered.

Alternatives Considered

- Power shovel
- Hydraulic excavator
- Underground wheel loader
- Surface wheel loader
- Wheel tractor-scraper
- Dragline
- Clamshell excavator
- Continuous miner
- Backhoe
- Bucket wheel excavator.

Alternatives Failing Must Criteria

- Backhoe--too small and too slow for required rate
- Continuous miner--cannot handle large boulders
- Wheel tractor-scraper-- cannot feed conveyors
- Dragline--not well suited for conveyor feeding.

All alternatives were judged acceptable in meeting ALARA criteria because the equipment could be remotely operated or shielded cabs could readily be provided on driver-operated equipment.

Alternative Selection

Of the remaining alternatives, the surface wheel loader was judged best at meeting the want criteria. Mining-size loaders are commercially available with bucket sizes up to 13 yd^3. Larger capacity loaders of up to 27 yd^3 are currently under development. Loaders can easily excavate in the relatively unconsolidated Hanford Site soils. They are highly maneuverable and can move material very quickly. A skilled operator can control excavation depth within inches and can load conveyor feed hoppers without undue spillage. They are highly reliable, easy to maintain, and relatively inexpensive. Overhead clearance requirements are relatively low. Although they are diesel powered, exhaust gases can be easily treated with catalytic converters. Cabs can be modified for shielding by the use of leaded glass and can be sealed for supplied air ventilation. Such modifications would require some engineering development but no significant technological innovation.

Of the alternatives dismissed, a brief rationale is given below. The alternatives are discussed in order of preference from second best to worst.

- Underground wheel loader; operated remotely, which reduces excavation control ability

- Power shovel; larger machine; more difficult excavation control; more expensive; higher maintenance; higher overhead clearance required; less maneuverable

- Hydraulic excavator; similar to power shovel
- Clamshell excavator; poor excavation control; higher cost; very high overhead clearance required; less maneuverability
- Bucket wheel excavator; very poor excavation control; highest cost; high maintenance.

5.1.2 Conveying to Transport Containers or Overburden Stockpiles

Criteria

Must:

- No vehicles moving in or out of containment structure that must be decontaminated
- High rate
- Capable of handling full size range of soil including boulders
- Waste segregation capability (high activity/low activity to separate containers).

Want:

- Compatible with field measurement systems
- Minimum rehandling
- Simplicity
- Availability without development
- Portability.

Alternatives Considered

- Rubber-belted conveyors were the only option considered.

Alternative Selection

Rubber-belted conveyors with feed hoppers/oversized grizzly meet all of the evaluation criteria. Conveyors are a well-proven technology and are available without development. Portable systems are commercially available in a wide variety of sizes, capacities, and construction materials. They are relatively simple, mechanically, and maintenance is straightforward, requiring periodic replacement of rubber parts and drive motors. Because conveyor systems can be designed to achieve a reasonably uniform soil layer thickness along the belt, they are ideal for mounting instruments for real-time measurement of radiation levels or other parameters. Conveyor systems will be designed to allow segregation of wastes by activity level; i.e., high-activity wastes will be diverted to separate shipping containers.

For contamination control, portions of conveyors outside the containment structure would have to be totally enclosed and operated under negative pressure ventilation. These provisions would require some engineering development.

Before a containment structure is placed at any site, about one-third of the uncontaminated overburden surrounding a contaminated area will be stripped off. Rather than conveyors, it is more efficient that the uncontaminated soils be dumped from the loaders directly into trucks and hauled to a stockpile area at the site where overburden is stored for later use as excavation backfill. For this transport application, large off-highway dump trucks, such as those used in mining operations (75- to 85-ton capacity), will be used. Using trucks for overburden stripping rather than conveyors will accelerate the rate of excavation. Once the containment structure is in place, the second third of the overburden will be excavated and transported out of the containment structure using the belt conveyors. This material would be trucked from the loading bins to the overburden stockpile. To excavate the final third of the overburden, the loaders will work in conjunction with belt-conveyor systems to transport soil outside of the structure to soil shipping containers, because this last third of overburden is potentially contaminated; i.e., it is excavated close to the contaminated areas.

5.1.3 Structure and Buried Waste Excavation and Demolition

Criteria

Must: Alternative capable of

- High rates of excavation and/or demolition
- Meeting ALARA requirements
- No secondary waste generation.

Want: In order of importance

- Highly selective excavation control
- Reliable/low maintenance
- Low cost
- Commercially available with minimal modification
- Low overhead clearance required
- Transportable and highly maneuverable.

Alternatives Considered

For excavation of buried waste, the surface wheel loader was selected as the primary excavation device for the same reasons as it was chosen for soil excavation. However, because structures and/or odd shapes and sizes are addressed in this category, other tools need to be considered for excavation around buried structures, demolition of structures, cutting oversized objects, and for handling shapes and sizes that cannot be handled using a loader. Special tools considered are as follows:

For excavation around buried structures:
- Backhoes.

For concrete demolition:
- Hydraulic hammers
- Wrecking balls

- Crackers
- Water jet cutters.

For metal cutting:
- Mobile shears
- Torches
- Water jet cutters.

For handling odd-sized shapes and steel drums:
- Grapples
- Drum attachments.

Alternative Selection

For excavation around buried structures, backhoes were the only equipment considered. Backhoes meet the criteria well and provide a means of excavation in narrower spaces than can be accessed by the large loaders used primarily for soil and buried waste excavation.

For concrete demolition, crackers were selected as best meeting the criteria. Crackers are attachments that interchange with backhoe buckets on hydraulically operated booms. This is considered a substantial advantage because only one type of equipment, the basic backhoe tractor, would need to be provided. Crackers can demolish concrete rapidly, simultaneously cutting and/or removing rebar and crushing the concrete into smaller pieces as demolition proceeds. In contrast, wrecking balls are slower than crackers, cannot cut the rebar, and are not as adept at pulverizing the concrete as the crackers are. Water jet cutters could not meet the rate or secondary waste criteria.

Because of size constraints of the jaw opening, a hydraulic hammer may be required to preprocess very thick structures before employing jaw-type attachments. The hydraulic hammer is another boom-mounted attachment that will break concrete into sizes more amenable to processing. Although hydraulic hammers will not be effective in cutting rebar, the cracker and shear (discussed below) attachments are very effective in this application.

For metal cutting, mobile shears were selected as best meeting the criteria. Similar to crackers, shears are attachments interchangeable with backhoe buckets. Shears are capable of cutting I-beams, steel plate, pipe, rebar, and other metal shapes very rapidly. They can even pulverize concrete, although they cannot demolish concrete as efficiently as the cracker jaws can. Of the alternatives, torches were considered second best, but were not favored because of the perceived decrease in rate and because they can vaporize radionuclides, thus possibly requiring the need for special vapor control. Water jet cutters could not meet the rate or secondary waste criteria.

For handling (lifting, loading, etc.) odd shapes, grapples were favored because they meet all the criteria and, like the crackers and shears, are interchangeable attachments to a backhoe boom. Grapples also offer versatility in that they can perform some excavation and demolition functions as well as functions such as flattening or bending metal shapes for volume or size reduction. Drums can be handled with loaders, grapples, or special

attachments designed especially for handling drums in a manner that does not crush the drums. Such drum attachments could be used when intact drums are encountered.

All the special tools, which are attachments to the basic backhoe frame, meet ALARA criteria in that cabs can be provided with radiation shielding and supplied air without reliance on technology development, although, as with the loader, some engineering development will be required for such modifications.

5.1.4 Pipeline Excavation

5.1.4.1 Pipelines on Land.

Criteria

Must:

- High rate capability
- ALARA
- Flexibility; i.e., capable of handling large variations in pipe diameter and wall thickness and adverse conditions (e.g., corroded pipe, sludge in pipe, collapsed pipe).

Want:

- Minimal airborne contamination (e.g., vaporization of radionuclides)
- Minimal or no secondary waste generation
- Allow pipe ends to be sealed.

Alternatives Considered

- Mobile shears
- Cutting torches
- Water jet cutters
- Mechanical cutters (e.g., abrasive wheels, saws).

Alternative Selection

For pipeline excavation, backhoes were considered to best meet the excavation criteria because they can maneuver better around pipelines than loaders can.

For pipeline cutting, mobile shears were selected as the preferred option for the same reasons as discussed in Section 5.1.3. Shears offer an additional advantage in that the pipe ends can be crimped as they are being cut, thus preventing runout of any sludge present. Water jets and torches were rejected for the same reasons as discussed in Section 5.1.3. Mechanical cutters would be slower than shears and would not be as versatile in handling sludge.

5.1.4.2 Pipelines Under the River.

Criteria

Must:

- Ability to operate in flowing current of water
- Prevent sediment release to the river if sediments are contaminated
- Meet ALARA requirements
- Ability to dewater contaminated sediments removed
- Ability to excavate large cobbles.

Want:

- Rapid excavation; rapid pipe removal and cutting.

Excavation of river pipelines obviously requires different approaches than land excavation to meet the criteria.

Alternatives Considered

Only barge-mounted equipment was considered:

- Clamshell dredge
- Backhoe
- Hydraulic dredge.

Mobile shears and underwater torches were considered for pipe cutting.

Alternative Selection

For sediment excavation, standard river dredging equipment was judged to best meet the criteria. Although different types of dredges are available, clamshells were judged better at operating in deep water than backhoes. Hydraulic dredges are not capable of removing large boulders. Also, clamshells offer some advantage over backhoes in that sediments are somewhat dewatered as they are removed, provided that sufficient time is allowed for water to drain after each sediment is lifted. For lifting pipe, standard cable-mounted grapples would be used. Underwater torches were selected instead of shears because the shears were judged less able to operate in deep water.

5.1.5 Containment Structures

Criteria

Must:

- Provide adequate head space for excavation equipment and conveyors
- Negative pressure
- Transportable
- Require no foundations.

Want:

- Maneuverable to turn corners
- Large free span to span width of most sites without intermediate supports
- Portable ventilation systems
- Capable of decontamination
- Modular construction for size modification.

Alternatives Considered

- Westinghouse Hanford bridge truss structure
- Air support buildings.

Alternative Selection

The Westinghouse Hanford bridge truss structure described in Bauer (1991) was selected as the system best meeting the criteria. Air support buildings were dismissed because they are not negative-pressure systems (an important must criteria) and are not commercially available in large sizes; i.e., more than approximately 200 ft wide. Only transportable systems were considered, because erection of foundations and/or tracks was considered undesirable for the low-technology, high-volume throughput approach.

The Westinghouse Hanford design consists of a modular truss structure mounted on crawler transporters that can be maneuvered in any direction. The system can be built with free spans approaching 500 ft, which would span the width of most waste sites. For larger widths, adjacent structures will be provided. The trusses will be made as bolt-together units so that the size can be reduced for smaller sites. The lining will consist of durable fabric-reinforced plastics that can be decontaminated, if necessary. Such materials are commonly used for impoundment linings. The integrated systems are not available commercially and will require engineering design development, for example, to design for wind and snow load. However, the system components are commercially available and thus will not require technology development.

The ventilation systems will consist of commercially available exhaust blowers, prefilters, and HEPA filters mounted on trailers for transportability. These will be connected to the containment structure via flexible ducting. Such systems will also require engineering development.

5.1.6 Dust Suppression

Criteria

Must:

- No secondary waste generation
- No hazardous components
- No mobilization of contaminants in the soil
- Meet ALARA requirements.

Want:

- Minimal impact on excavation control
- Effective
- No development required
- Low cost.

Alternatives Considered

- Water sprays/fogs
- Lignosulfate suppressants
- Tree sap suppressants
- Vacuum hoods
- Gunite.

Alternative Selection

The containment structure provides the primary protection against release of contaminated dust to the environment, but dust suppression within the containment structure will be needed to meet ALARA requirements. Dust suppression is also economically advantageous because it will reduce ventilation system HEPA filter loading and potentially will reduce equipment decontamination requirements.

Dust suppression has numerous facets, and therefore no one system provides all the answers. A combination of systems will be employed, tailored to the specific needs and severity of the job and the quantity of dust generated.

Major dust generation is anticipated at the excavation face and at the soil dump point (inlet to conveyor feed hopper). At the excavation face, water sprays and fogs were selected as being the most effective means for control. Sprays would not be of sufficient volume to saturate the soil, thus mobilizing contaminants, but controlled to prevent dust from traveling long distances within the containment structure; i.e., maintaining relatively localized mists.

At the feed hopper dump point, a vacuum hood was selected as the most effective means of control. Such a hood would be designed to exhaust sufficient volumes of air to capture most of the dust generated as the soil is dumped into the conveyor feed hopper. The exhaust would be collected in portable cyclone separators and filters in a system separate from the containment structure ventilation system.

Surfaces traveled by wheeled equipment inside the structure would be treated for dust suppression using commercially available products. Of the products investigated, the tree sap-based products such as EnduraSeal are preferred. Such materials have a demonstrated effectiveness and are nonhazardous.

Finally, Gunite concrete would be used in special cases in which stabilization of contaminated soil was needed temporarily during a time when the area was exposed; i.e., not protected within a containment structure (e.g., if hot spots were discovered during stripping of overburden soils).

5.1.7 Field Measurement Systems

Criteria

Must:

- Ability to operate in adverse environment (e.g., dust, moisture)
- Continuous or real-time measurement
- Remote operation.

Want:

- High sensitivity to contaminants measured
- Low sensitivity to background interferences
- Rapid response/rate
- Measure broad range of contaminants
- Portable
- Low maintenance
- Remote output capability
- Low cost.

Alternatives Considered

Radionuclides:

- Scintillation detectors
- Cutie Pie
- Sodium iodide detectors
- Geiger-Mueller detectors
- Pancake probes
- Field Instrument for Detecting Low Energy Radiation (FIDLER)
- "Micro-R" meter
- X-ray fluorescence
- Alpha continuous air monitor.

Criticality:

- Neutron counter.

Chemicals:

Volatile organic compounds:
- Photo ionization detectors
- Portable gas chromatograph
- EMFlux (a trademark of the Quadrel Company)
- Colorimetric tubes.

Metals:

- X-ray fluorescence.

Physical:

- Ground-penetrating radar
- Electromagnetic induction
- Magnetometer.

Alternative Selection

An evaluation of each type of instrument system against the criteria given previously is given in Table 3-1. Several instrument systems were eliminated because they cannot operate effectively in an adverse environment (e.g., dust, moisture, vibration, equipment interferences). Examples are Cutie Pie detectors, pancake probes, EMFlux, XRF, ground-penetrating radar, and metal detectors. Several instruments were eliminated because they cannot provide continuous/real-time measurement: colorimetric tubes, EMFlux, ground-penetrating radar, electromagnetic induction, and magnetometer. Although advancements in technology development may mitigate the deficiencies of the instrument systems rejected, system selection at this point is based on current state-of-the-art.

Of the instrument systems meeting the must criteria, final selection (see Section 3.1.1) was based primarily on judgements as to which of the instrument systems best meet the want criteria.

5.1.8 Waste Sorting/Segregation

The 200 Area disposal site will require that delivered wastes be segregated, at a minimum, according to their radiation level and/or TRU content. In addition, it was assumed for the low-technology approach to 100 Area remediation that waste sorting and/or segregation would occur only to the extent necessary to facilitate waste transport. Therefore, no formal criteria or alternatives were identified in this area. However, some waste segregation systems described in Chapter 3.0 are required to facilitate conveying and transport or criteria that prohibit disposal of VOCs. These are summarized as follows.

- Removal of boulders (greater than 12 in.) from excavated soil to facilitate use of rubber-belted conveyors. A conveyor feed hopper with an inclined grizzly was the only alternative considered. Such is standard, commercially practiced technology (see Section 5.1.2)

- Intact drums will be removed for inspection/analysis and further processing, if necessary

- Wastes will be segregated according to their radioactivity levels as required for disposal (see Sections 5.1.2 and 5.1.7).

In addition, clean overburden is segregated from contaminated soil such that the bulk of the overburden can be used for site backfill, which also effectively reduces the soil volumes shipped for 200 Area disposal.

5.1.9 Volume and Size Reduction

Consistent with the basic premise of the low-technology approach to 100 Area remediation, volume and size reduction will occur only to the extent necessary to facilitate waste transport. Therefore, no formal criteria or alternatives were identified in this area. However, some size reduction and/or waste separation systems described in Chapter 3.0 are required to facilitate conveying and transport. These are summarized as follows.

- Large-diameter pipe will be cut into lengths that can be transported via racks on railcars. Mobile shears were selected for this purpose (see Section 5.1.3)

- Concrete, steel, and wood demolition rubble will be size reduced to fit into 50-yd^3 shipping boxes. Mobile shears and/or concrete crackers were selected (see Section 5.1.3).

5.1.10 Organics Removal

Criteria

Must:

- Volatile organic compound content of waste reduced to pass toxic characteristic leaching procedure test.

Want:

- No secondary waste generation
- Minimize processing complexity (low-technology solution)
- Low cost.

Alternatives Considered

- Pre-excavation in situ soil venting
- Soil venting of surface piles following excavation
- Soil venting of soils after placing in shipping containers
- Thermal treatment.

Alternative Selection

Thermal treatment was selected as the only viable option for processing intact drums found to contain VOCs. Very few drums are anticipated for the 100 Areas as explained in Section 3.3.3. A centralized treatment facility is proposed, which will be located either in the 300 Area, if available, or in the 100 Areas, if necessary. Because the 300 Area has proposed a thermal treatment system for processing drummed waste, the recommended alternative is to utilize that facility. If that facility is not available, the facility in the 100 Areas would be of the same design (e.g., low temperature, rotary feed).

For organics removal from soils and buried wastes other than intact drums, the following two alternatives were combined as best meeting the criteria:

- In situ soil venting used as a primary organic removal scheme
- Soil venting of containerized waste used as a backup system.

In situ soil venting or SVE is becoming standard technology for VOC remediation of the vadose zone at Superfund sites. The technology works especially well in porous soils such as those found at the Hanford Site and involves relatively simple equipment systems. An advantage of in situ venting is that large areas can be remediated without the need for removing soil, although a soil gas survey is required prior to application of venting. Because of the ability to remediate large areas at a time, in situ venting is judged more practical and economical than venting the soil after excavation, via piles or in containers. Treatment after excavation is feasible but could slow down the excavation process. Thus, venting after excavation is considered as a backup only if in situ venting misses some spots or the soil gas surveys fail to identify completely contaminated areas.

For the backup system (i.e., venting after excavation), container venting was selected over pile venting. Although pile venting is relatively conventional technology, it has at least two major disadvantages: piles must be protected with a containment structure and inherently require double handling. The alternative, venting soil after placing in transport containers, eliminates those disadvantages. Also, container venting would be more controllable and would require less time because of the smaller and more geometrically uniform volumes of soil in the containers.

For performing the soil gas surveys prior to in situ venting, two alternatives were evaluated: the traditional approach using probes followed by portable GC or laboratory analysis of sampled gases and the Petrex method described in Section 3.3.3 and Appendix B.1.

The Petrex method was selected because of the following:

- It is a time-integrated method; i.e., soil gas probes stay in the soil over a period of time, which compensates for "soil breathing" effects resulting from changes in barometric pressure. By contrast, the conventional method takes an instantaneous "grab" sample
- The Petrex method is less labor intensive. Less field labor is required because the method only involves simple placement of the sample tubes into shallow holes and collection of tubes at the end of the test period
- Analytical costs are modest for the Petrex method. Analysis by direct injection mass spectrometer is quoted by the vendor at less than $100 per sample, including the sample tube itself.

5.1.11 Waste Transport to the 200 Areas

Criteria

Must:

- High rate/capacity
- Containment integrity; i.e., no leakage
- Container integrity; e.g., withstand high impacts during loading
- Minimal/no secondary waste generation
- Meets ALARA requirements
- Transport long distances (greater than 10 mi).

Want:

- Flexibility for access to waste sites
- Safety of operation within transport corridor
- Waste form flexibility
- Minimum requirements for waste sorting/segregation/size reduction
- Decontamination ability
- Low cost
- Ease of loading/unloading
- Dust-free loading/unloading
- Interim storage capability
- Minimize repackaging/double handling
- No transport vehicles in containment building.

Alternatives Considered

Transport:

- Rail
- Truck
- Conveyors
- Slurry lines.

Containers:

- Closed hoppers on wheels
- Sea-land type boxes
- Custom made, moveable via cranes
- Covered racks for large-diameter pipe.

Alternative Selection

Rail transport was selected as the transport system that best meets the criteria. Slurry pipeline systems were rejected because they generate secondary waste (contaminated water) and cannot handle the full size range of soils, which includes cobbles and boulders. Conveyors were rejected because they are limited to soils and cannot handle the full range of waste forms without size reduction. Also, long-distance conveyors would be difficult to engineer for containment; e.g., maintaining a negative pressure inside the conveyor channel. Truck transport is considered a viable option but scores

lower than rail transport, primarily on safety. The accident potential is greater for truck transport, particularly in the winter when roads are icy. Also, rail systems would score better on meeting ALARA because less personnel would be involved per unit of load, and distances between personnel and load are greater.

Regarding shipping containers, a custom-made, crane-moveable, 50-yd^3 box was chosen as the "standard" for all materials. This container type was judged as best meeting the criteria and most compatible with rail transport. There are four types of boxes (see Section 3.4.1); the only differences in design among the types is whether the box is reusable (Types 1 and 2 for low-activity wastes) or single-use, i.e., disposed of with the waste (Types 3 and 4 for high-activity wastes). Type 1 and 3 boxes would be fitted with a top door for receiving large-sized waste forms, and Types 2 and 4 would be fitted with top-filling ports for soils. Reusable boxes would have a side gate for unloading; single-use boxes would not require the side gate because the boxes would be disposed of with the wastes. The high-activity boxes would not be shielded but would be transported in shielded overpacks. Type 1 boxes would be transported in unshielded overpacks because of potential surface contamination.

The selection of a single-use container for high-activity wastes was driven by the handling requirements proposed for the 200 Area disposal site, which is further driven by considerations of future retrievability. Utilizing single-use containers will be a major cost driver (see Chapter 8.0). Consideration of reusable containers for high-activity wastes is recommended.

Rail-hopper cars were considered the most viable alternative to boxes, but it was judged that hopper cars did not offer desirable waste form flexibility and would provide less operating flexibility. The difficulties in operating flexibility would result from the aspect that, because hopper cars are somewhat fixed in location depending on track location, conveyors that move soil to the cars would have to be moved around and lengthened/shortened as the excavation proceeds from site to site and sometimes even within the same site. In addition, soil movement from the excavation would depend on the ability to move railcars into place, which could delay excavation. It is preferred that the shipping containers be moveable instead. This not only simplifies conveyor configuration, which allows more standardization of conveyor systems, but also provides greater flexibility for using the containers for interim storage, which eliminates the potential bottleneck in railcar movement.

Gantry cranes or trucks are used to move containers from the excavation site to the rail loading station depending on distance. A portable bridge crane is used at the rail loading site to move containers on and off the rail flatcars.

Sea-land boxes, although similar in size to custom-made boxes, were judged as not providing sufficient structural integrity to withstand high loading impacts and the heavy weights of materials such as steel and/or concrete. Also, the custom-made box requires loading and unloading ports and/or gates, which are not available on the sea-land box.

The covered rack was the selected alternative for large-diameter, low-activity pipe (i.e., greater than 24 in. in diameter and less than 200 mrad/h). Boxes would not be as practical for very large-diameter pipe, which can range up to 84 in. The high-activity waste boxes would be used for high-activity pipe (greater than 200 mrad/h), but some size reduction such as flattening the pipe or cutting it longitudinally might be required to fit the large-diameter pipes into the boxes. As with all high-activity materials, boxes containing high-activity pipe would be shipped in shielded overpacks.

5.1.12 Site Restoration

Criteria

Must:

- Revegetation for soil stabilization and aesthetics is required for all end-use options including wetlands.

Want:

- Minimize the quantity of imported soil for backfill and/or topsoil
- Minimize the degree of earthmoving
- Preserve the utility of the land for end use; i.e., final contours do not preclude desired development or use.

Alternatives Considered

- Total backfill to restore original contours
- Recontouring to establish new but acceptable contours
- Revegetation with native species
- Import topsoil to facilitate revegetation
- Irrigation to establish new vegetation
- No backfill; create wetlands.

Alternative Selection

No net benefit was judged for total site backfill because this option would require great quantities of imported fill, which could be environmentally detrimental to the borrow area. Therefore, this alternative was not given further consideration.

The selection of the alternative best meeting the criteria depends somewhat on the ultimate land use. For both the General Use and Industrial Use options, recontouring, importation of topsoil, and revegetation with native species is judged the best combination of alternatives. Artificial irrigation would be required to initiate growth of revegetation, but could be discontinued once growth was well established.

If creation of artificial wetlands is desired, the excavations would not be recontoured, but only sufficient topsoil would be imported to sustain revegetation. However, creation of wetlands in the arid environment of the Hanford Site would not likely be feasible unless artificial channels or canals were dug to the river.

6.0 DISCUSSION OF SELECTED SYSTEM

6.1 ADVANTAGES OF SELECTED SYSTEM

The selected system, as described in Chapter 3.0, consists of the following primary components:

- Front-end loaders for general excavation
- Mobile containment structures
- Mobile demolition tools
- Conveyors for contaminated material less than 12 in.
- Rail transportation
- Fifty-cubic-yard containers for contaminated material transport and interim storage
- Field measurement equipment and mobile laboratory capability.

The advantages of the selected system result from individual components having met each of the "must" evaluation criteria as discussed in Chapter 5.0. In summary, the key advantages of the selected system components are as follows:

- Front-end loaders
  - High excavation rate
  - Compatible with conveyors
  - Easily modified with shielding for ALARA
  - Can excavate to depths greater than 50 ft
- Bridge truss containment structure
  - Operates under negative pressure
  - Transportable
  - Adequate size to cover most waste sites without moving structure or excavating in repeated passes
- Mobile demolition tools
  - High demolition rate
  - Easily modified with shielding for ALARA
- Conveyors
  - High throughput
  - Capacity to handle full soil particle size range
  - Waste segregation capability
- Rail transport
  - Allows for high rate of material handling
  - Provides adequate transport safety
  - Meets ALARA principles

- Fifty-cubic-yard transport containers
  - Allow for high rate of material handling
  - Provide adequate environmental containment
  - Meet ALARA principles

- Field measurement equipment
  - Can operate in an adverse environment
  - Provides real-time measurement
  - Provides remote operation capability (ALARA).

6.2 DISADVANTAGES OF SELECTED SYSTEM

Although the selected system is judged achievable and workable, the system will have some limitations. Recognizing the limitations is important in the engineering development phase to design features into the system that mitigate the disadvantages. The limitations are as follows.

- The proposed approach of using large containment structures minimizes the need for frequent moving of the structure. However, such large structures will require larger and more expensive support systems, such as for ventilation

- The macroengineering approach of proceeding without completely definitive information on contamination levels will require that shielding be substantially overdesigned to compensate for the uncertainties

- The field instrumentation selected is fairly rugged but because it is subjected to rather severe conditions, it will probably require substantial maintenance

- Rubber-belted conveyors may be difficult to decontaminate due to the soft, penetrable nature of rubber. However, to avoid the spread of contamination when conveyors are moved, removal of surface contamination is judged adequate. The rubber belts will be a high-maintenance item and will require disposal as contaminated waste

- The emphasis on high-volume throughput necessitates a relatively nonselective excavation method; i.e., waste items will not be individually sifted out and segregated. As a result, there is some increased risk to workers and, therefore, the system design will require a careful hazards and safety analysis to ensure adequate worker protection against a wide range of contingencies. Further discussion of this issue is given in Section 10.4

- The macroengineering approach, specifically the low-technology approach assumed for the 100 Areas, emphasizes a high rate of excavation and demolition at the sacrifice of volume reduction. The excavation and demolition methods are somewhat nonselective as to contamination levels; therefore, some potentially noncontaminated materials may be transported to the 200 Areas for disposal as contaminated waste. Mitigation of this problem would require a

slower demolition rate. For example, instead of demolishing all the concrete structures and hauling all the debris as contaminated waste, it may be possible to "scabble" the intact concrete surfaces of retention basins down to a depth where all of the contamination has been removed. The remaining structure could then be demolished by such means as explosives and the resultant rubble disposed of as noncontaminated waste

- A critical element in meeting the 20-yr remediation timeframe is the adequacy and availability of mobile and fixed laboratory capabilities.

6.3 CONSIDERATION OF WORKER AND ENVIRONMENTAL SAFETY

The design concepts presented in this study have placed both environmental and human safety as "must" criteria. Every system component has been selected to provide as safe and environmentally protective system as possible, consistent with the principles of ALARA. The specifics of system considerations in this regard are discussed in the following sections.

6.3.1 System Considerations Relative to Worker Safety

Excavation and demolition operations within the 100 Areas will require workers to operate equipment in and around hazardous and/or radioactive materials. The hazards of such operations potentially expose workers to penetrating radiation, airborne dispersion of fine particulates, and volatile organics. However, safety features will be designed into the proposed excavation and demolition systems to mitigate such exposures thus ensuring worker safety during cleanup operations. For study purposes it has been conservatively assumed that all equipment cabs will be shielded for radiation protection (see Section 6.2). This assumption may be overly conservative for many of the waste sites in the 100 Areas, and the actual design would need a more rigorous hazards analysis to define specific shielding needs.

In addition to hazards relating to waste characteristics, hazards exist that are common to all large industrial and mining scale operations. Design provisions, borrowed from the mining and construction industries, will be considered to mitigate these hazards.

The following design considerations need to be incorporated into engineered systems to adequately protect workers during excavation operations.

- Shielded cabs--Based on a potential maximum dose, the cabs of excavators, backhoes, trucks, monitoring vehicles, bulldozers, and all human-operated equipment within the excavation containment structure should be shielded with suitable thicknesses of lead or equivalent shielding material to mitigate exposure. Because the operator will require visual contact with the area being excavated, at a minimum, leaded X-ray protective glass 7.5 mm (LANL Isotope and Nuclear Chemistry Division) in thickness should be used for all

heavy equipment cab windows. Other safety factors such as automatic blinds composed of lead may also be necessary. A worst-case design might require a periscope (Gloyna and Ledbetter 1969)

- Catalytic converters on diesel exhaust--Such converters are standard practice in mines and are necessary to prevent buildup of noxious fumes in confined areas. This also reduces ventilation system requirements by reducing the need to purge large volumes of air through the system to maintain low concentrations of fumes

- Thermoluminescence dosimeters--The cumulative dose to which workers are exposed should be monitored using thermoluminescence dosimeters (TLD) to ensure that no health-threatening threshold is reached

- Air filters--The potential for workers to inhale fine particulates and VOCs will be mitigated by the use of self-contained ventilation systems on all excavation and demolition vehicles

- Water sprays--The use of water sprays is proposed for use in demolition and excavation to help prevent contamination from becoming airborne

- Remote cutting and demolition equipment--Demolition tools mounted on relatively long excavator booms inherently provide protection to workers by maintaining distance to the radiation sources and thus eliminating any need for workers to come in direct contact with contaminated materials.

6.3.2 System Considerations Relative to Environmental Safety

The most important feature of the system for protection of the environment is the mobile site containment structure. The design of this structure is intended to prevent the spread of airborne contamination to the environment during excavation and demolition operations. Those operations that do not use the containment structure (e.g., overburden excavation) will have continuous real-time monitoring capabilities at the point of operation to identify unexpected contamination. If a hot spot is encountered, a soil stabilizer or fixative (e.g., Gunite) will be applied immediately to stabilize and/or fix the contaminated area for later excavation within a containment structure.

Conceptual features specified for the containment structure are as follows.

- A negative pressure will be maintained inside the structure

- The structure will be covered with a durable and reinforced polyester material that can be decontaminated, if necessary

- The structure will be equipped with exhaust blowers, pre-filters, and HEPA filters to provide removal of contaminated particulates before discharging the exhaust air to the environment

- Five airlocks are proposed for movement of equipment and personnel in and out of the structure.

Other ancillary design features that will ensure that the environment is adequately protected are as follows:

- The use of water mists in conjunction with excavation and demolition equipment to reduce the generation and spread of fugitive dust
- The use of soil stabilizers to limit generation of dust by traffic within the containment structure
- Self-contained, sealed, negative-pressure conveyors
- The use of vacuum hoods and elephant trunks to capture dust in high-dust loading areas such as loader dumping points
- The use of Gunite to seal any hot spots found during excavation operations that do not use a containment structure.

6.4 CONSIDERATION OF WASTE VOLUME REDUCTION

Consistent with the basic premise of the low-technology approach to 100 Area remediation, volume and size reduction will occur only to the extent necessary to facilitate waste transport and meet the acceptance criteria of the disposal facility (e.g., keeping high-activity waste separated from low-activity waste).

The specified measurement and sorting systems are capable of separating clean soils from contaminated soils and high-activity waste materials from low-activity materials.

The key system feature for excavation of clean overburden involves three steps, in which one-third of the total overburden is removed during each step. The three steps are as follows.

1. The first one-third of the overburden (stripping the first 20 ft for side slopes) will be excavated and stockpiled near the site for future use as backfill
2. An additional one-third of the clean overburden will be stripped and stockpiled after the containment structure is installed
3. The final third of overburden is sufficiently near the contaminated material that contaminated material would likely mix with clean soil as it is excavated. It is assumed that this contaminated mixture would be sent to the 200 Areas for disposal.

The excavation of overburden in these steps will minimize the total amount of material that must be handled, transported, and processed.

Real-time characterization is a key feature of volume reduction that will allow separation of contaminated material from clean soil, thereby reducing total waste volume shipped to the 200 Areas. The clean soil can be used subsequently for backfilling purposes.

6.5 CONSIDERATION OF SECONDARY WASTE MINIMIZATION

Minimization of secondary wastes generated during cleanup of the 100 Areas is an important design consideration for the engineered system presented here. Although generation of some secondary waste such as HEPA filters and contaminated rubber equipment parts is unavoidable, the quantities of these materials are considered to be insignificant relative to the quantities of excavated waste and should not have a measurable impact on the proposed handling or disposal systems.

The recommended cleanup system utilizes standard industrial heavy equipment for excavation and demolition operations. This system involves only mechanical and hydraulic components for manipulation of excavation and demolition tools. The advantage of such systems and components is that no secondary wastes are generated during routine operations. Thus, cleanup operations will only alter the size and shape of waste forms.

Secondary wastes will be generated during periodic decontamination of heavy equipment (as described in Section 6.8). Although decontamination requirements are unavoidable, administrative controls can reduce the quantity of waste generated.

Another potential source for secondary waste is the decommissioning of heavy equipment. Once the useful service life of equipment is completed, decommissioning will be required. At that point, equipment can be either packaged and disposed of as contaminated waste or decontaminated and disposed of as clean waste. Rubber and plastic components such as tires and hoses are difficult to decontaminate and likely will require disposal as a contaminated waste.

Other sources of secondary waste include discarded personnel protective equipment, such as clothing and spent HEPA filters. Because the ventilation and vacuum systems used for excavation containment are large, the volume of HEPA filters requiring disposal will be significant.

6.6 CONSIDERATION OF ALARA

The concept of ALARA states that the environment for workers involved with radioactive materials will be such that exposures are limited to levels ALARA. The contaminated waste is expected to contain both radioactive and hazardous materials. The primary contaminants include mixed fission products and chemicals, such as ^{90}Sr, ^{60}Co, chromium, tritium, and nitrate.

Although radiation exposure levels are expected to be low due to the moderate energy gamma emissions, it will still be of concern for workers who are exposed over relatively long periods of time. Therefore, in due consideration of ALARA, it is important that the workers are protected against

exposure to penetrating radiation, and also protected from contact with radioactive and hazardous materials during excavation/demolition, transportation, routine maintenance, and decommissioning.

The proposed remedial system includes several aspects for operator protection as follows:

- No direct contact with contaminated materials
- Controlled environment for equipment operators (e.g., self-contained ventilation systems)
- Equipment operation from within shielded cabs.

The selected system does not require direct worker contact with contaminated materials during excavation and demolition operations. Use of large-scale, heavy equipment will provide a continuous separation between workers and contaminated materials. Operators of demolition tools will always be at a distance away from materials, separated by the length of the excavator boom. Thus, depending on the particular excavator model being used, more than 30 ft can separate equipment operators and material being demolished (Caterpillar Inc. 1988). Similarly, front-end loaders, bulldozers, and trucks will provide adequate separation between operators and contaminated materials.

Shielded cabs will be specified for all equipment operating where contamination may be present. Self-contained, filtered air systems are also specified for equipment operating near potentially contaminated materials.

The design of the transportation system also takes ALARA into consideration by minimizing the number of transfer operations during waste handling. To reduce the number of transfer operations (between containers and flatcars, containers and disposal site, etc.), the selected design is based on the largest available flatcar of 100 tons nominal capacity, and also utilizes only one large container per flatcar. This minimizes the number of transfer operations, and results in a reduction in exposure man-hours.

The container design assumes that the containers would be made of steel. Lead-lined overpacks would be used for containers holding high-activity (greater than 200 mrad/h) wastes (Type 3 and 4 containers), and unshielded overpacks would be used for containers holding low-activity oversized wastes (Type 1 containers). Remotely maneuverable loading ports, lids, and unloading gates (see Section 3.4.1) will further ensure that there is no personnel contact with radioactive or hazardous contaminants. Overall, the transportation of containers on flatcars makes the contaminated waste inaccessible during transit, and therefore radiation exposure can occur only during railcar shuttling operations and during container handling.

6.7 CONSIDERATION OF ABILITY TO HANDLE VARIABILITY

Consistent with the macroengineering approach, the remedial system is designed to provide performance versatility, which will allow for a broad

range of contingencies to handle variability in waste forms, waste quantities, and hazardous conditions. Specifics are discussed in Sections 6.7.1, 6.7.2, and 6.7.3.

6.7.1 Ability to Handle Variability in Waste Volume

Each individual component comprising the recommended system (excavation, demolition, transportation) has been specified with sufficient capacity to handle a potential increase in waste volume. This is achieved by using very large equipment such as that used in the mining industry. Relative to a mining operation, the volumes of materials to be encountered in site remediation are modest. However, the actual rate of excavation will be more dependent on peripheral considerations such as containment system operations, dust control, decontamination, and monitoring.

To ensure that necessary system-wide capacity is achieved, it is proposed that three excavation/demolition operations be conducted in parallel. This will meet required soil-removal capacities and provide contingency for periodic downtime for routine maintenance and/or containment structure repositioning (see Section 3.5). System requirements for soil excavation within the containment structure over a 20-yr period average 340 Byd^3/h; the system has been specified at a capacity of 1,341 Byd^3/h. Although continuous operation is unlikely, the system can handle a maximum increase in contaminated soil of 294%.

Similarly, structure demolition operations will be performed in parallel for the same reasons. System requirements for demolition waste and metal objects are approximately 57 Byd^3/h. The demolition system specifies one dedicated pipe removal crew and three parallel demolition operations such as steel tank dismantling, concrete retention basin removal, and miscellaneous metal waste processing. However, system requirements can be achieved easily with one operating demolition system and one pipeline removal system. Therefore, the remaining two demolition systems provide contingency for increases in waste volumes or other factors that may slow the rate of demolition.

System requirements for overburden excavation average about 93 Byd^3/h. However, the system is specified at 265 Byd^3/h of overburden removal capability. Thus, the system can accommodate an increase in overburden volume by 185% assuming continuous operation.

The transportation system will be capable of handling extra volumes of waste, up to 15% more than currently specified. The current design (Section 3.4.2) already accounts for variability in waste volumes by assuming that the waste containers would be filled to only 80% of their full capacity. If the containers are filled close to their full capacity (95%), some compensation for waste volume increases will be realized. Further, at any given time, only 48 containers are being transported on trains (empty or full). One set (16 containers) is assumed available for loading and one set for unloading, for a total of 80 containers in use at any given time. A total of 109 Type 1 and 345 Type 2 containers have been specified to allow for these transit requirements and for a 2-day analytical delay. High-activity wastes

use single-use containers (Types 3 and 4), and thus container scheduling is not a problem assuming that adequate inventories of containers are kept available.

6.7.2 Ability to Handle Variability in Waste Properties

The majority of the specified tools can be used for multiple purposes. The proposed demolition tools are commonly used for industrial demolition, tank dismantling, scrap processing, railcar/auto dismantling, rebar cutting, and concrete processing. This equipment is designed for durability and continuous performance under adverse conditions. Similarly, the large 50-yd^3 containers recommended for transporting the waste are expected to be able to handle waste of any anticipated size, shape, or properties.

The variations in waste characteristics will not affect the selected demolition tools. Universal processors are available with interchangeable jaw configurations for virtually any application. The available jaw configurations are concrete pulverizers, concrete crackers, shears, wood cutters, plate cutters, grapples, and drum handlers. Different jaw configurations can be interchanged or replaced within 45 min or alternatively, more tractors can be used to avoid frequent jaw changing. Other special application processors can be built upon request.

The size and shape of different waste forms will dictate the dimensions of the jaw opening and cutting depth necessary. Shear jaws are available with openings in excess of 5 ft and cutting depths in excess of 6 ft. Concrete cracking jaws are available with openings in excess of 6 ft and cutting depths in excess of 3 ft. Wood jaws are available with openings in excess of 5 ft and cutting depths up to approximately 4 ft.

Little or no variability is expected in soil based on existing characterization data. Thus, the excavation and conveyor systems for soils should be easily specified with little uncertainty. Similarly, the specified containers are large enough to handle significant variability.

6.7.3 Ability to Handle Variability in Constituents and Concentration

The various components of the conceptual design are anticipated to be relatively insensitive to the contaminant constituents and their concentrations in the waste.

High levels of radiation are a concern from the standpoint of worker safety, but will not affect the performance of the heavy equipment. It is expected that the difficulty of tool decontamination will increase after use in high-level radiation environments. Shielding requirements must be specified to handle anticipated radiation dose rates.

6.8 CONSIDERATION OF DECONTAMINATABILITY

Contamination will accumulate on heavy equipment during use. Preventive measures will be taken to reduce the rate of contaminant buildup. For example, at the end of each shift, equipment will be monitored and hot spots wiped clean. Hydraulic lines, motors, and other components of heavy equipment will be sealed with covers (e.g., flexible rubber sleeves or protective boots) that are easy to clean to facilitate decontamination and maintenance.

Heavy equipment decontamination potentially would involve wiping, washing, and/or sandblasting. Decontamination operations will be conducted in a dedicated area designed to contain all wash solutions and particulates. Wiping will remove surface contamination; washing and/or sandblasting will provide more thorough contaminant removal. Sandblasting is the most extensive decontamination method and is generally followed by repainting the equipment.

As discussed in Section 3.2.1, a disposable inner liner is proposed for use on the containment structure to preclude the necessity for decontaminating trusses and the primary containment fabric. Section 6.2 discusses the decontamination concerns associated with the rubber conveyor belts.

Reusable containers (Types 1 and 2) can also be decontaminated, if necessary. The 50-yd^3 containers that consist primarily of flat surfaces can be readily decontaminated by washing or sandblasting. However, because all containers that are filled inside the containment structure will be shipped in overpacks, routine decontamination will not be required.

6.9 TRANSPORTABILITY/MOBILITY

The concepts proposed in this study require that all systems, including the containment structures, be transportable. The containment structure is mounted on crawler tracks and is fully translatable in any direction. Because of the very large size of the structure, however, its practical capability may only be for incremental short moves at a site and up to 4,000 ft from site to site. Longer moves, such as from area to area, are achievable, but some disassembly may be required prior to moving. This remains an area for design development.

Heavy equipment is mobile over short distances and transportable over longer distances on trucks or trains. Because excavation and demolition equipment (especially tracked vehicles) are capable of traveling only limited distances efficiently, alternative means of transportation will be required to move them from site to site within the 100 Areas. Demolition tools can weigh anywhere from several thousand pounds to nearly 60,000 lb depending on the particular attachment. The 60,000-lb attachment requires a 400,000-lb excavator base. Excavators are commonly transported on flatbed tractor trailers, although rail transport may be required for excavators in excess of 100 tons.

6.10 IMPLEMENTABILITY WITHOUT EXTENSIVE TECHNOLOGY DEVELOPMENT

Because the central premise to specification of systems for 100 Area remediation uses a low-technology approach, there is little need for extensive technology development although some systems will require significant engineering development. The 100 Area system components consist entirely of commercially available equipment. Excavators, trucks, bucket loaders, bulldozers, demolition attachments, railcars, and locomotives are standard industry equipment commonly used in industrial applications. Varying degrees of engineering development are anticipated for the following:

- Mobile containment structures
- Truck-mounted containment ventilation systems
- Dust- and fire-suppression systems
- Shielded cab design and installation
- Cab air supply and ventilation
- Containers and their unloading gate seals
- Instrumentation and mounting on vehicles
- Instrumentation mounting on conveyors.

One potential area for technology development, even though the proposed system can perform adequately without this feature, is real-time characterization of metals and VOCs (actual constituents and concentrations). Technology development opportunities are discussed in Chapter 9.0.

6.10.1 Engineering Test Requirements: General Task Description

In keeping with a low-technology, high-throughput approach, the components of the proposed system are based on proven industrial technology. The various components involving excavation, demolition, and transportation are merely modifications of standard practice in the mining, salvage, and rail industries. However, a few of the system components will require engineering testing. The largest component, the containment structure, will require testing of its ventilation, containment, materials, and propulsion subsystems. The monitoring vehicle also will require testing of the instrumentation operability and boom maneuverability.

6.11 CONSIDERATION OF ABILITY OF SYSTEM TO CHARACTERIZE WASTE AS INTEGRAL PART OF OPERATING SYSTEM

The proposed operating system will incorporate waste characterization on a real-time basis, thus ensuring that such characterization is an integral part of the overall system. As excavation proceeds, the method for characterizing the waste can be classified into the following three categories.

- Continuous real-time characterization--Monitoring instruments are available for continuous detection of alpha, beta, gamma, and neutron flux radiations, as well as VOCs

- Characterization in a mobile laboratory--No techniques have been identified for real-time characterization of metal contamination and ionic species such as nitrate. Therefore, a mobile laboratory will be used for characterization of these contaminants. The mobile laboratory will provide accelerated sample turnaround adequate for providing excavation control information

- Characterization in a fixed laboratory--Fixed laboratories will be used for analysis of 10% of samples analyzed in mobile laboratories for purposes of confirmation. Fixed laboratory analysis will also be used for all samples taken for site certification, indicating that the site is clean and thus can be delisted. All fixed laboratory analysis would use accepted analytical methods and full QA/QC including data validation.

Although continuous real-time monitoring will provide rapid information about the required depth of excavation or the type of container needed, such an approach is not expected to be of high precision because the operating conditions are expected to be adverse to most of the detectors. This limitation of the continuous monitoring system will be offset by subsequent confirmatory sampling in the mobile and fixed laboratories. In summary, the combination of the slower but more precise mobile and fixed laboratories with the less precise real-time monitoring system will enable waste characterization to become an integral part of the operating system.

7.0 PROPERTIES OF WASTE DELIVERED TO THE 200 AREAS

7.1 WASTE CHARACTERISTICS

This chapter describes the characteristics of the 100 Area excavated wastes that will be transported to the 200 Areas for disposal under both the General Use and Industrial Use Options. General categories to be shipped are listed as follows.

- Low-activity wastes (less than 200 mrad/h and less than 100 nCi/g alpha)
  - Soil, less than 12-in. particle size
  - Soil, greater than 12-in. particle size
  - Burial ground wastes
  - Demolition wastes including steel retention basins
  - Steel pipe

- High activity wastes (greater than 200 mrad/h or greater than 100 nCi/g alpha)
  - Soil, less than 12-in. particle size
  - Soil, greater than 12-in. particle size
  - Burial ground wastes
  - Demolition wastes including steel retention basins
  - Steel pipe.

Three packaging methods are specified as follows.

High-Activity Wastes--All high-activity wastes will be packaged in single-use (nonreusable) 50-yd^3 containers and transported in shielded overpacks. Containers are described in Chapter 3.0.

Low-Activity Steel Pipe, Greater Than 24-in. Diameter--Low-activity metal pipe will be cut into lengths suitable for transport (e.g., between 20 and 60 ft in length). Steel pipe with a diameter greater than 24 in. will be shipped on railcar racks. Contamination will be contained by crimping the ends of the pipe and grouting the ends to form a seal. The pipe racks will be covered with a heavy plastic sheeting for transport.

All Other Low-Activity Wastes--All other low-activity wastes will be packaged and transported in reusable, 50-yd^3 containers. Low-activity containers that have been filled inside the containment structure will be shipped in unshielded overpacks because the surface of the containers are potentially contaminated.

Secondary wastes such as HEPA filters, contaminated clothing, and failed equipment parts will be shipped in the same types of containers (appropriate for the type and level of waste) as the excavated wastes.

7.1.1 Size

The following provides a general description of the types and sizes of waste materials to be shipped.

Soil:

- Less than 12-in.-diameter particle size; full range to fine silt; generally dry and free flowing
- Greater than 12-in.-diameter boulders.

Buried Waste:

- Hard waste:
  - Discrete metals, chiefly aluminum tubes and spacers; maximum 20 ft in length
  - Failed steel and stainless steel equipment; cut to fit shipping boxes
  - Wood timbers; cut if necessary to fit shipping boxes
  - Concrete; see demolition wastes below
  - Drums; collapsed or whole; few drums expected.
- Soft waste:
  - Collapsed cardboard boxes with paper, rags, clothing, plastic; not compacted
  - Miscellaneous trash.

Demolition Waste:

- Concrete; a mixture of pulverized (3- to 12-in.-diameter) concrete without rebar and large chunks (to about 4 ft) with rebar; some separated rebar
- Steel plate; thin gauge sheet metal to 1/2 in. thick; maximum 20 ft length; variable widths 4 to 8 ft
- Wood timbers; cut if necessary to fit shipping boxes.

Pipe:

- 1/2- to 24-in.-diameter; cut to fit shipping boxes
- Greater than 24- to 84-in.-diameter; cut to 20 ft to maximum 60 ft lengths; crimped and sealed ends.

7.1.2 Contaminant Levels

The following provides a description of the general levels of contamination to be expected from each type of waste shipped for disposal.

Soil:

- Ninety-five percent of volume is low activity
- Contaminants chiefly mixed fission products and chromium, but some sites will have elevated levels of plutonium contamination (e.g., retention basin sludge and 116-K-2 trench).

Buried Waste:

- Hard waste:
  - Aluminum reactor parts and failed steel equipment likely source of high-activity buried waste; contaminants chiefly ^{60}Co
  - Wood timbers and concrete likely low activity and little chemical contamination.
- Soft waste:
  - All soft waste likely low activity and little chemical contamination.

Demolition Waste:
- All demolition waste likely low activity and little chemical contamination.

Pipe:
- All pipe likely low activity and little chemical contamination.

The specific range of contaminants and contaminant levels for each type of waste cannot be predicted at this time, but lists of contaminants of concern have been generated for each of the 100 Areas. The aggregate listing for the 100 Areas is given in Appendix A.2. Note that this list is conservative in that a constituent is sometimes proposed as a contaminant of concern based solely on a record of usage of a chemical, even though there either may be no indication that the chemical has been disposed of to the environment or, if disposed, the quantities of disposal may not be significant.

7.2 WASTE VOLUMES

7.2.1 Waste Quantities

Figures 7-1 and 7-2 provide estimated quantities of the excavated materials for the General Use and Industrial Use Options, respectively. Key assumptions are listed below. Details of the calculation methodology are presented in Appendix A.4.

- Uncontaminated overburden and side-slope soil (estimated as two-thirds of the total overburden) is stored onsite for later use as excavation backfill

- For the General Use Option, it is assumed that all soil to a depth of 33 ft below a waste unit is excavated to meet cleanup standards for this option (see Chapter 2.0)

- For the Industrial Use Option, the contamination is assumed to be most concentrated in the top third of the soil column immediately below the liquid waste disposal units. Therefore, it is assumed that the less stringent industrial use cleanup standards will be attained at a depth of 11 ft (1/3 by 33 ft) below the bottom of the liquid waste disposal units

- For the Industrial Use Option, negligible contaminant migration beneath the burial grounds is assumed based on the sampling data presented in Dorian and Richards (1978). Therefore, it is assumed that the soil beneath the burial grounds meets the industrial use cleanup standards and will not require excavation.

7.2.2 Container Quantities

Based on the waste quantities given in Section 7.2.1, the number of each container type to be shipped for disposal has been estimated as is summarized in Table 7-1. Calculations of container quantities are detailed in Appendix B.6.

9513354.0064

Figure 7-1. Waste Volume Distribution, General Use Option.

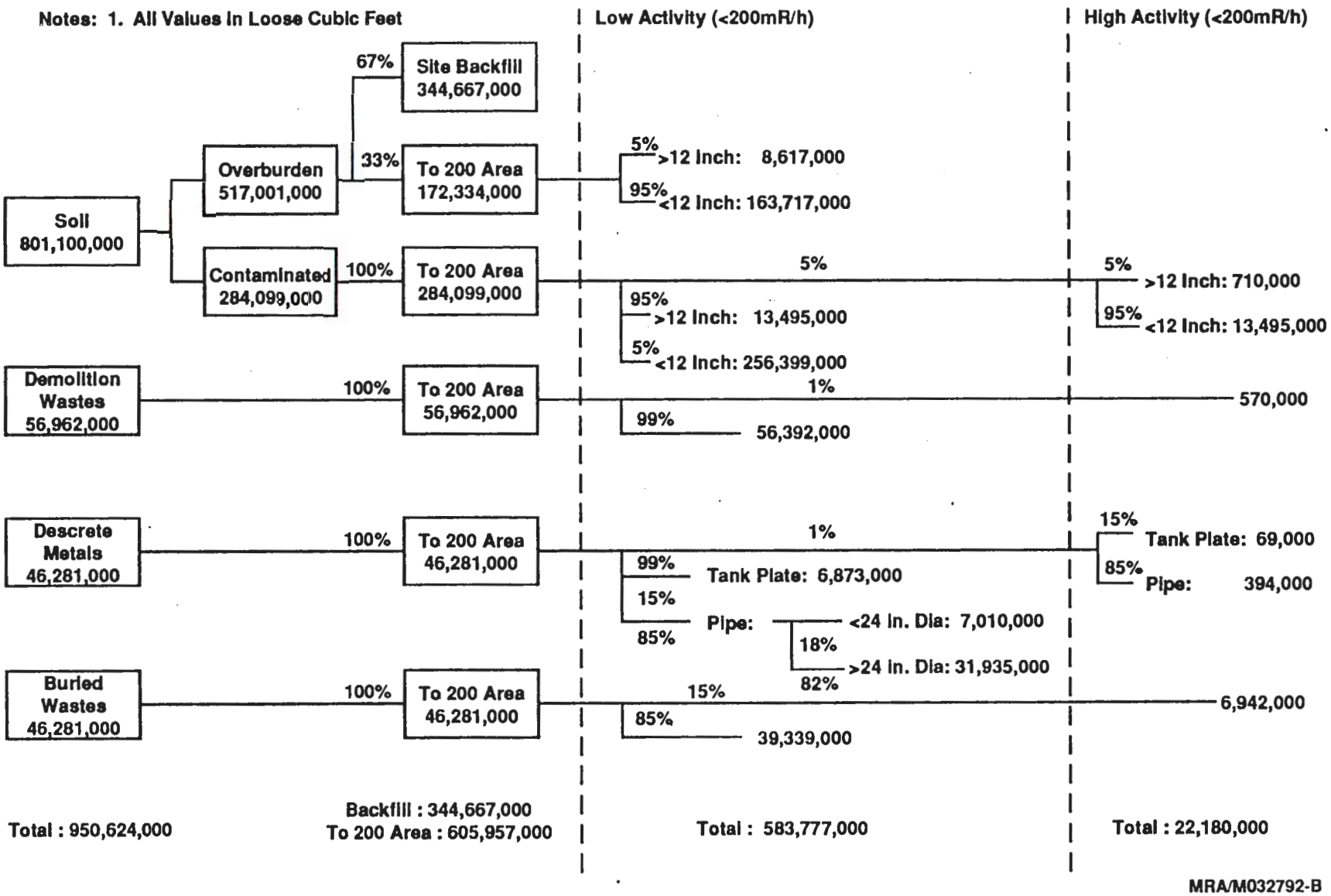

Figure 7-2. Waste Volume Distribution, Industrial Use Option.

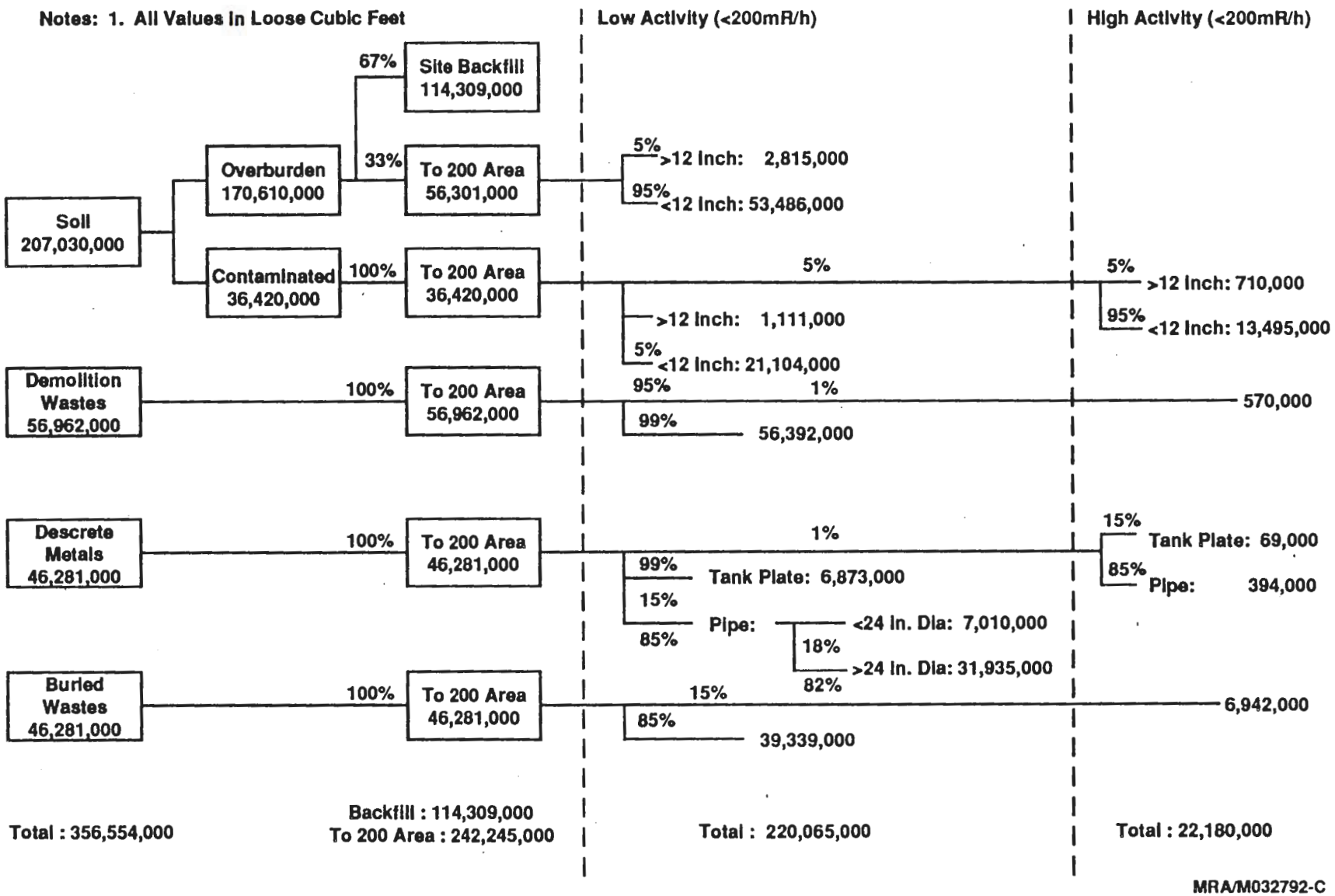

	Start Date	End Date
Design Permit/Program Development	1-Mar-91	14-Sep-15
100 Area Preconceptual Design	1-Mar-91	2-Sep-91
Conceptual Design	3-Sep-91	4-Mar-92
Title I Design	5-Mar-92	4-Sep-92
Title II Design	7-Sep-92	10-Dec-93
Title III Inspection Services	13-Dec-93	14-Sep-15
Permitting	5-Mar-92	14-Jun-94
H&S Program Development	5-Mar-92	14-Jun-94
QA Program Development	5-Mar-92	14-Jun-94
Engineering Development and Testing	4-Dec-91	21-Jun-96
Containment Structure Development	5-Mar-92	21-Jun-96
Field Measurement Systems Development	5-Mar-92	14-Jun-94
Container Development/Testing	5-Mar-92	14-Jun-94
VOC Venting Systems Development/Testing	4-Dec-91	9-Jun-93
Procurement Activities	5-Jun-92	19-Jun-95
Equipment Procurement/Fabrication	5-Jun-92	19-Jun-95
Contractor Bid & Selection	5-Jun-92	9-Jun-93
Construction/Field Mobilization	10-Jun-93	6-Jul-99
Soil Gas Survey/Soil Venting	10-Jun-93	6-Jul-99
Field Mobilization/Equipment Installation	10-Jun-93	10-Dec-93
Operation Shakedown/Demonstration	13-Dec-93	21-Jun-96
Site Excavation/Demolition	13-Dec-93	16-Sep-16
Demolish Surface/Near Surface	15-Jun-94	1-Jul-98
Excavate Land Pipelines	20-Jun-95	6-Jul-99
Excavate Liquid Waste Disposal/UPRs	24-Jun-96	9-Sep-14
Excavate Burial Grounds/Landfill	7-Jul-99	1-Aug-05
Excavate River Pipelines	2-Aug-05	9-Aug-07
Characterization/Data Management	13-Dec-93	16-Sep-16
Site Certification/Restoration	20-Jun-95	16-Sep-16
Soil Gas Survey/Soil Venting	20-Jun-95	9-Sep-14
Field Mobilization/Equipment Installation	20-Jun-95	14-Sep-15
Operation Shakedown/Demonstration	21-Dec-95	16-Sep-16
Decon/Demobilize Rem. Systems	10-Sep-14	14-Sep-15

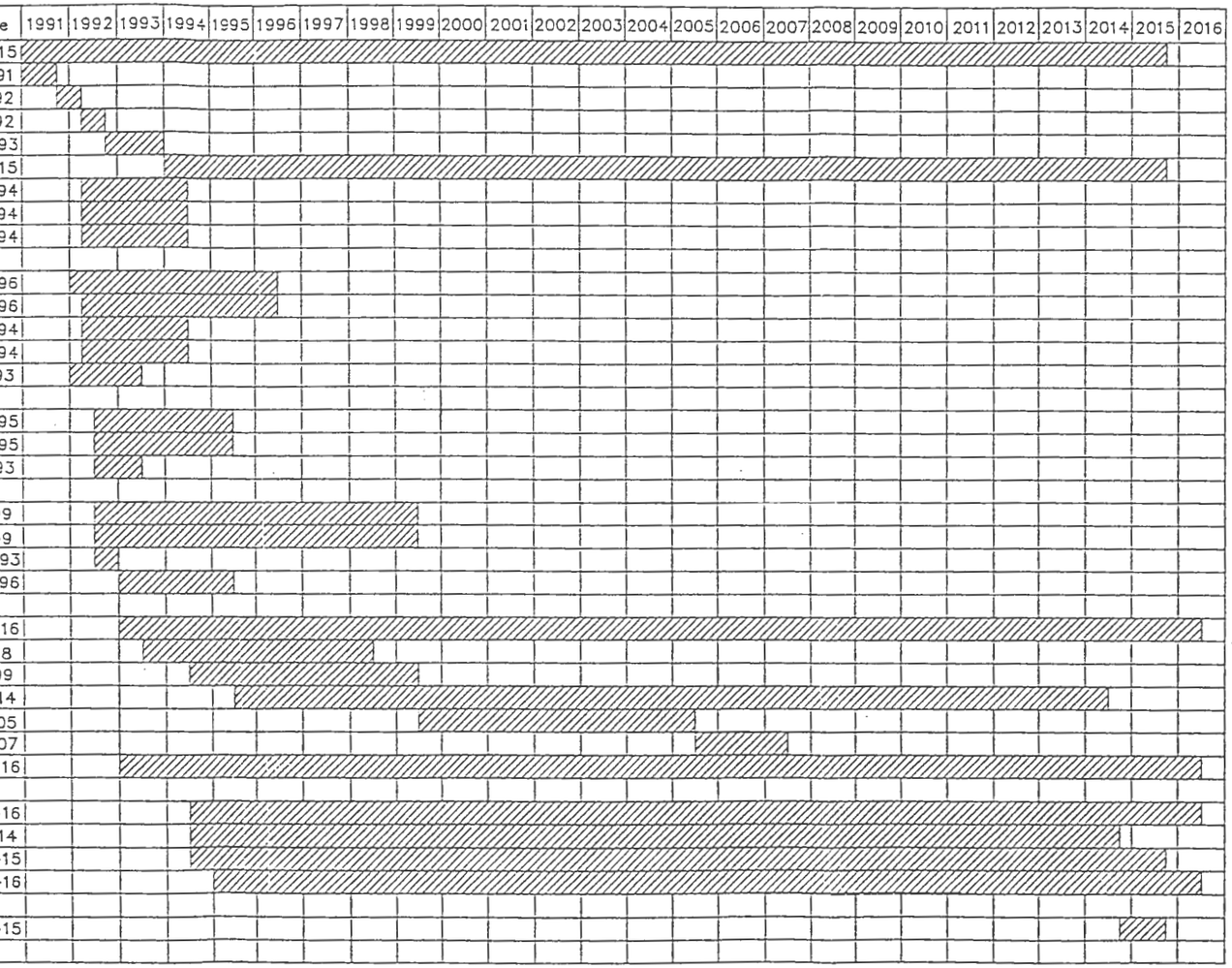

GEN\031692-D

Figure 8-1. Schedule.

THIS PAGE INTENTIONALLY
LEFT BLANK

9.0 TECHNOLOGY DEVELOPMENT OPPORTUNITIES

Technology development opportunities are defined as those opportunities for which:

- A current technology does not exist
- The opportunity has the potential to significantly reduce remediation costs and/or schedule
- The opportunity has the potential to significantly reduce potential environmental or personnel risks with only a moderate increase in cost.

Engineering development requirements are distinguished from technology development opportunities in that engineering development utilizes conventional equipment and materials modified to account for the unique challenges presented by the waste site conditions. An example is modifying the operator's cab of a conventional front-end loader to provide radiation shielding. Such modification requires engineering development but does not require the development of new technology.

Because the 100 Area remediation study followed a low-technology approach, utilizing conventional equipment and methodologies wherever possible, technology development opportunities are somewhat limited. However, two items are identified that relate to needs for better field screening instrumentation. Although neither is needed to begin the cleanup task, technology improvement could benefit by lowering costs, increasing effectiveness, etc. Table 9-1 provides technology development recommendations.

A number of needs for engineering development relate to systems such as containment structures and support systems, conveyors, and containers. Proposed engineering development requirements are given in Table 9-2.

It is essential that a hazards analysis be completed before implementation of the macroengineering systems. The results of the hazards analysis will provide additional definition for those engineering development tasks necessary to satisfy worker health and safety issues (e.g., shielding requirements).

Table 9-1. Technology Development Recommendations.

Recommended item	Recommended development or improvement	Necessary to begin?	Long-term cost, schedule, or safety advantages
Real-time, analyte-specific quantification capability (e.g., concentrations of individual organic compounds and metals)	New analytical methods and/or detectors	No	Minimize excavation of soil that meets cleanup standards; no equipment standby time awaiting analytical results from confirmatory sampling; lower cost analyses
Field-screening instrumentation for radiation, chemical, physical, criticality detection	Equipment made less sensitive to adverse environmental conditions such as moisture, dust, vibration, interferences	No	Less equipment downtime because of lower maintenance/replacement frequency; greater measurement accuracy and precision; increased safety assurance
Robotics for remote excavation of special hazard materials	Potentially greater safety when excavating high-hazard materials such as compressed gas cylinders or munitions	No	Increased worker safety

Table 9-2. Engineering Development Required to Implement 100 Area Remedial System.

Item	Further design analysis	Modification of existing equipment	Fabrication using existing materials	Concept performance testing	System optimization testing
Bridge truss containment structure	x		x	x	x
Containment structure ventilation system	x		x		x
Containment structure airlocks	x		x		x
Containment structure fire-suppression system	x		x		x
Containment structure dust-suppression measures	x		x		x
Wind skirts (alternate to containment structure)	x		x		x
Cab shielding and cab ventilation systems		x			x
Feed bins, overpacking, and associated enclosure	x		x		x
Covered conveyors		x			x
Conveyor radiation detection instruments		x			x
In situ volatile organic compound venting	x		x	x	x
In-container organic compound venting venting	x		x	x	x
Cofferdams/ sheet piling seals	x		x	x	x
Containers and pipe racks	x		x		x
Container overpacks	x		x		x
Boom-mounted instrumentation packages		x			x

10.0 SENSITIVITY OF SELECTED SYSTEM TO CHANGES IN ASSUMPTIONS

This chapter discusses sensitivities of the proposed systems to changes in key assumptions on waste volumes and operating time as follows:

- Ten-fold increase in waste volumes
- Ten-fold decrease in waste volumes
- Two-fold decrease in operating time (20 yr to 10 yr).

In addition, uncertainties and failure modes of the proposed system are discussed in Section 10.4.

Changes in assumed contaminated material quantities can be anticipated only for soil and buried waste volumes. Quantities of demolition wastes for structures such as pipelines, retention basins, outfall structures, and vaults are not included in potential ten-fold increases or decreases in waste volume because quantities of these are known with relative confidence. Conversely, it is possible that actual soil and buried waste volumes, and corresponding overburden, could differ greatly from assumed quantities, and thus these categories are included in the sensitivity analysis.

Only changes in waste volumes/operating time for the General Use Option have been assessed, but it is expected that the resulting sensitivities for the Industrial Use Option would be similarly applicable.

10.1 IMPACT ON SYSTEM IF WASTE VOLUME INCREASES BY TEN TIMES

A ten-fold increase in waste volume results in a total of approximately 283 MByd^3 of overburden, contaminated soils, and buried wastes. This corresponds to an average system capacity requirement of about 4,725 Byd^3/h based on 20 yr of operation.

10.1.1 Impact on Excavation System if Waste Volume Increases by Ten Times

The selected excavation system would remain the same, but additional equipment and high-activity waste containers would be required to meet the greater volume demands. The higher capacity excavation system would consist of the following:

- Ten 23-yd^3 capacity loaders. Each loader has an estimated capacity of 408 Byd^3/h. The required soil excavation rate under containment structures is approximately 3,400 Byd^3/h
- Fifteen containment structures of 1,000 by 400 ft. Ten containment structures are assumed to be active, and the remaining five are assumed to be in transition to other sites

- Five 13-yd^3 loaders working in combination with twenty-five 75- to 85-ton dump trucks in precontainment overburden stripping. The required excavation rate is approximately 930 Byd^3/h, and the recommended loader capacity is 1,325 Byd^3/h

- The conveyor system is relatively unchanged with the exception of increasing belt speeds and motor sizes.

Assumptions inherent with the above system changes include 60,000 total operating hours available and two-thirds of the 15 containment structures are active at all times.

10.1.2 Impact on Demolition System if Waste Volume Increases by Ten Times

The demolition system, like the excavation system, will require additional tools to accommodate a ten-fold increase in waste volume. As previously discussed, structures are not assumed to be a part of the ten-fold increase in waste volume, although buried wastes are because they will have oversized objects that will require cutting by demolition tools. Impacts to the demolition system are as follows:

- A ten-fold increase in the quantity of buried oversized material will require 17 excavators with universal processing attachments for operation within containment structures. The recommended jaw configurations for these universal attachments are (14) shear jaws; (8) plate jaws; (4) wood shear jaws; (14) concrete cracking jaws; (10) hydraulic hammers; and (14) grapple jaws.

The specification of this equipment assumes that at least one universal processor with shear jaws (for cutting oversized objects) is required within active containment structures during nondemolition operations. Otherwise, the same number of demolition tools as specified in Chapter 8.0 will be required for demolishing structures, since the volume of these does not change. It is further assumed that the maximum number of simultaneous demolition operations is equivalent to the number of active containment structures.

10.1.3 Impact on Transportation System if Waste Volume Increases by Ten Times

A ten-fold increase in the volume of the waste will have substantial impact on the transportation system described in Section 3.4.2. The 100-ton bulkhead flatcars are the largest standard size available, and therefore it is not feasible to increase the payload per flatcar to compensate for such a large increase in waste volume.

The specified system assumes that the containers are filled to only 80% of their capacity. A small increment in capacity can be achieved if it is assumed that the containers will be filled to a greater extent, although realistically, containers cannot be filled to 100%. The increment of capacity is considered insignificant for this scenario.

The variables in the rail system are the number of flatcars per train and the terminal delay time for loading and unloading containers. An increase in the number of flatcars per train would lessen the number of freight trains required and also lessen the number of round trips required per train. The delay time can be shortened by using more gantry cranes in the loading docks. For example, the terminal delay time can be reduced by a factor of 10 if more gantry cranes are used so that the loading/unloading rate is increased from 20 containers per hour to 200 containers per hour.

The methodology outlined in Appendix B.5 is applied to calculate the required number of flatcars per train and the number of trains required, based on the new volume of waste and the new loading/unloading rate. If it is assumed that the crane loading/unloading capacity will remain unchanged from the existing rate of 20 containers per hour, a minimum of 20 freight trains will be required. It is not judged practical to operate such a large number of trains between two sites that are only 10 to 15 mi apart because of potential congestion of the railroads. Therefore, a better approach would be to both increase the number of flatcars per train and decrease the terminal delay time by using more cranes. If the terminal delay time is shortened by a factor of 10, 7 freight trains with approximately 23 to 28 flatcars per train (7 round trips per day) will be required. The locomotive requirements would also increase proportionately; a locomotive (or a combination of locomotives) having a minimum draw-bar-pull of roughly 47,498 lb would be required for hauling 25 flatcars.

A ten-fold increase in waste volume will also impact the number of containers needed. Assuming each site has 25 containers available at all times, each train is fully loaded with containers, and a 2-day backlog of waste is in temporary storage awaiting analytical results, the container requirements are given as follows:

- Type 1: 477 reusable
- Type 2: 2,985 reusable
- Type 3: 71,808 nonreusable
- Type 4: 124,953 nonreusable
- Unshielded overpacks: 477 reusable
- Shielded overpacks: 173 reusable.

Detailed calculations of container counts are given in Appendix B.6.

10.2 IMPACT ON SYSTEM IF WASTE VOLUME DECREASES BY TEN TIMES

A ten-fold decrease in the estimated waste volume would result in a total of approximately 3 $MByd^3$ of overburden, contaminated soils, and buried wastes. The resulting system capacity is approximately 70 Byd^3h based on 40,000 operating hours (one shift per day, 250 days/yr, 20 yr). The impacts

of this capacity requirement on the recommended systems for excavation, demolition, and transportation are discussed in Sections 10.2.1, 10.2.2, and 10.2.3.

10.2.1 Impact on Excavation System if Waste Volume Decreases by Ten Times

The proposed excavation system would require less equipment with smaller processing capacities. However, the general design and implementation of the system would remain unchanged. The excavation system would consist of the following:

- Two front-end loaders with 3.5-yd^3 buckets. Each front-end loader has an estimated capacity of 98 Byd^3/h. The required soil excavation rate within containment structures is approximately 51 Byd^3/h

- One front-end loader with a 7-yd^3 bucket used in precontainment overburden stripping

- Two containment structures, measuring 600 by 400 ft and 400 by 400 ft. One containment structure is assumed to be active at all times, and the other is assumed to be in transition between sites; it is further assumed that two of the containment structures would be combined side-by-side to form a 1,000-ft-wide structure for containing the larger sites

- The conveyor system recommended is a 24-in.-wide belt with 20° troughing idlers running at 300 ft/min. Horizontal belts require 6-Hp motors, and inclined belts will require 25-Hp motors. This system has a capacity of 300 tons/h. The 24-in. belts will require use of a 6-in. scalping grizzly as opposed to the 12-in. proposed for the baseline waste volume. The recommended apron feeder is 30 in. by 15 ft with a 5-Hp drive motor.

10.2.2 Impact on Demolition System if Waste Volume Decreases by Ten Times

The demolition system, like the excavation system, would require fewer numbers of the same types of tools. It is assumed that the ten-fold decrease pertains only to oversize buried wastes. Structure demolition operations would not change, though fewer simultaneous operations would be required. Impacts to the demolition system are:

- A decrease in active containment structures to one; this also reduces the possible number of active demolition operations to one. This results in use of a maximum of two base excavators with universal processors. Jaw configurations required are (2) shear jaws; (1) wood shear jaws; (2) concrete cracking jaws; (1) hydraulic hammer; and (1) grapple jaws.

The equipment specification above is based on the assumption that at least one universal processor with shear jaws (for cutting oversized objects) is within the active containment structure during nondemolition operations. Otherwise, the same number of demolition tools as specified in Chapter 8.0 will be required for structure demolition.

10.2.3 Impact on Transportation System if Volume Decreases by Ten Times

The selected transportation system would not be affected. Because the system has been designed on a rate basis (i.e., tons of waste transported per unit time), this rate can remain the same regardless of the total volume of the waste. Thus, the same number of trains specified in Section 3.4.2 would be used, although the total number of trips to the 200 Areas will decrease substantially.

A ten-fold decrease in waste volume will reduce the number of containers needed. Assuming each site has 16 containers available at all times, each train is fully loaded with containers, and a 2-day backlog of full containers is in temporary storage awaiting analytical results, the container requirements are given as follows:

- Type 1: 55 reusable
- Type 2: 109 reusable
- Type 3: 1,665 nonreusable
- Type 4: 1,250 nonreusable
- Unshielded overpacks: 55 reusable
- Shielded overpacks: 8 reusable.

Detailed calculations of container counts are given in Appendix B.6.

10.3 IMPACT ON SYSTEM IF OPERATION TIME IS DECREASED TO TEN YEARS

Decreasing the operating period for remediation of the 100 Areas to 10 yr requires removal of approximately 1,000 Byd^3/h of overburden, contaminated soils, and buried wastes. Ten years translates into 30,000 h of operating time on the basis of 250 operating days/yr, 8 h/day for half the year, and 16 h/day for half of the year. The impacts of this new capacity requirement on excavation, demolition, and transportation operations are discussed in Sections 10.3.1, 10.3.2, and 10.3.3.

10.3.1 Impact on Excavation System if Operating Time is Decreased to Ten Years

Reducing the operating time by one-half increases the excavation capacity requirements by a factor of two. The soil excavation rate requirement for 10 yr of operation is approximately 868 Byd^3/h. This further divides into 187 Byd^3/h of precontainment overburden removal and 681 Byd^3/h of soil excavation within containment structures. The general design and implementation of the excavation system would remain unchanged. The excavation system required for a 10-yr operation is described as follows.

- Precontainment excavation design and equipment specification would remain unchanged for the 10-yr operational period (i.e., one 13-Byd^3 loader working in combination with five 75- to 85-ton dump trucks). The required precontainment excavation rate is approximately 187 Byd^3/h, and the recommended front-end loader capacity is 265 Byd^3/h

- Excavation within containment structures will require two 13-yd^3 front-end loaders per containment structure to sustain the 681 Byd^3/h excavation rate. Each loader has an estimated 265 Byd^3/h capacity, resulting in 530 Byd^3/h per containment structure

- A total of four containment structures are required, two measuring 1,000 by 400 ft, one measuring 600 by 400 ft, and one measuring 400 by 400 ft. This specification is based on the assumption that two-thirds of the structures will be active at any given time; mechanical availability for equipment is 80%; and structures can be combined or divided (e.g., a 400- by 400-ft structure in addition to a 600- by 400-ft structure will form one 1,000- by 400-ft structure)

- The conveyor system for each containment structure would remain the same as that recommended for a 20-yr operating period.

10.3.2 Impact on Demolition System if Operating Time is Decreased to Ten Years

Reducing the operating time by one-half doubles the demolition system capacity requirements. The new required demolition system capacity would be approximately 114 yd^3/h. This further divides into 60 yd^3/h of buried metal and 54 yd^3/h of concrete waste. The general design and implementation of the demolition system as presented in Chapter 3.0 remains unchanged. The demolition system required for a 10-yr operation is described as follows.

- Baseline requirements for pipeline demolition requires removal at the rate of 1.25 ft/h. Doubling this rate requirement would have a negligible effect on the baseline design for pipeline removal

- A minimum of three active containment structures will be operating at any given time. Thus, seven base excavators with universal processing attachments are recommended for operation within containment structures. The jaw configurations required are (6) shear jaws; (4) plate jaws; (2) wood shear jaws; (6) cracking jaws; (3) hydraulic hammers; and (6) grapple jaws.

The equipment specification above is based on the assumption that at least one universal processor with shear jaws (for cutting oversized objects) is required within active containment structures during nondemolition operations. Otherwise, the same number of demolition tools specified in Chapter 8.0 for structure demolition will be required. It is further assumed that the maximum number of simultaneous demolition operations is equivalent to the number of active containment structures.

10.3.3 Impact on Transportation System if Operating Time Is Decreased to Ten Years

The rate of transportation would be doubled to 1,212 tons/h. Calculations using the methodology outlined in Appendix B.5 show that to finish the project in 10 yr, 5 freight trains will be required to operate 3.5 round trips per day with 17 to 20 flatcars per train. This is based on the assumption that the terminal delay time remains the same.

Similarly, the total number of containers will increase based on 5 freight trains, 20 flatcars per train, 4 excavation sites, and a 2-day backlog of temporarily stored filled containers. The container requirements are summarized as follows:

- Type 1: 212 reusable
- Type 2: 672 reusable
- Type 3: 8,042 nonreusable
- Type 4: 12,495 nonreusable
- Unshielded overpacks: 212 reusable
- Shielded overpacks: 44 reusable.

Detailed calculations of container counts are given in Appendix B.6.

10.4 UNCERTAINTIES AND FAILURE MODES

The macroengineering approach to 100 Area remediation has specified systems that consider a broad range of site conditions and contingencies; there are uncertainties in both assumed conditions and assumed equipment capabilities, which could either result in a failure to perform and/or a need for additional systems or procedures to mitigate problems. While it is not within the scope of this study to identify all possible failure modes, some of the key uncertainties and possible failure modes are identified here to focus

needs for further analysis and/or development. Note that identification of a possible failure mode does not necessarily mean that the system fundamentally will not work, but it may mean that the system or the procedures need to be modified or supplemented so that workable solutions are achieved. It should also be noted that the analysis discussed here does not constitute a hazards and safety review (e.g., identifying all possible accident scenarios).

Uncertainties for 100 Area remediation relate to the following systems and/or activities:

- Containment systems for:
  - Excavations on land
  - River pipeline excavation
- Buried waste excavation hazards
  - Fire/explosion
  - Criticality
- Radiation protection
  - Equipment shielding.

Regarding containment systems for excavation activities on land, the key uncertainties relate to current lack of a demonstrated system. Numerous design considerations must be resolved to provide for such features as inherent structural integrity, transportability, wind and snow load resistance, ventilation requirements, and overall containment effectiveness. If the concept of a truss system on crawlers is not workable, a fall back will require either large, fixed, or rail-mounted structures, or possibly smaller portable structures. Although the excavation scheme may require some redefinition or efficiency may be reduced, no fundamental changes in the low-technology approach are anticipated.

Uncertainty regarding containment of river pipeline excavation is a concern if sediments are found to be contaminated above cleanup levels. Cofferdams are proposed for this application, but such systems have not been tried in this application; thus, the effectiveness in controlling sediment dispersion remains a key uncertainty. In addition, during the removal of sediments by excavators, spillage of wet sediments would be inherently difficult to control. Additional concepts or systems may need to be investigated to mitigate such potential problems.

Hazards of excavating buried wastes relate to potential for fires, explosions, or criticality events. If sealed containers such as drums contain wastes and are pressurized, or if they contain hydrogen or other flammable organics, there is potential for fires or explosions. Potential hazards related to compressed gas cylinders also exist. Fire-suppression systems have been recommended to mitigate fires without explosion, but the potential for localized explosions is an unknown. It is believed that few buried drums are in 100 Area burial grounds. It is also believed that worst-case detonation of a drum full of hydrogen would not result in a very large explosion and, since workers are well protected in somewhat remote, shielded cabs of large excavators, even a significant explosion would not pose a serious hazard. Compressed gas cylinders potentially pose greater hazards because explosion of these has been known to produce significant damage. If hazards analysis shows

the risks of the proposed scheme for buried waste excavation to be unacceptable, alternatives could be considered using remotely operated excavation equipment (a form of robotics). Such systems would require substantial technology development and demonstration, which could have significant cost and schedule impacts (see Chapter 9.0).

The potential for a criticality event is considered remote because of the contaminant concentrations and configuration of buried wastes. Although criticality monitoring provisions have been specified as a precaution, monitoring alone will not ensure that a criticality event will never occur. Potential hazards might be mitigated by appropriate cab shielding design.

Some uncertainty exists regarding the radiation levels in waste units. For study purposes, a maximum source radiation rate has been assumed at 1 rem/h. For most of the 100 Areas, it is anticipated that dose rates would be far less than this based on past waste characterization data. The 100-N Area cribs are the most highly radioactive of the 100 Areas, although actual potential dose rates are not known. This uncertainty could result in underdesign of shielding systems, although additional shielding would be added, if necessary.

11.0 REFERENCES

Bauer, R. G., 1991, *Containment Alternatives for Contaminated Soil Excavation*," WHC-SD-EN-ES-011, Revision 0, Westinghouse Hanford Company, Richland, Washington.

Caterpillar Inc., 1988, *Caterpillar Performance Handbook*, Edition 19, CAT Publication, Peoria, Illinois.

DOE-RL, 1991, *Hanford Site Waste Management Units Report*, DOE/RL 88-30, Revision 1, Vol. 2, U.S. Department of Energy, Richland Operations Office, Richland, Washington.

Field, J. G. and G. C. Henkel, 1990, *Physical Treatment of Hanford Waste Sites Engineering Study*, Draft, WHC-SD-EN-ES-006, Revision 0, Westinghouse Hanford Company, Richland, Washington.

Gloyna, E. F., and J. O. Ledbetter, 1969, *Principles of Radiological Health*, Marcel Dekker, Inc., New York, New York.

Hay, W. W., 1977, *An Introduction to Transportation Engineering*, 2nd ed., John Wiley & Sons, New York, New York.

Myers, D. R., H. H. Rode, and N. R. Wing, 1991, *Disposal Study for Contaminated Hanford Remediation Wastes*, WHC-SD-EN-ES-010, Rev. 0, Westinghouse Hanford Company, Richland, Washington.

Rexnord Inc., 1976, *Nordberg Process Machinery Reference Manual*, 1st Edition, Process Machinery Division.

United Nations, 1973, *Physical Requirements Of Transport Systems For Large Freight Containers*, ST/ECA/170, United Nations Publication, Department of Economics and Social Affairs, New York, New York.

WHC, 1992, *Hanford Past-Practice Site Cleanup and Restoration Conceptual Study: Integrated Study and Summary*, WHC-EP-0456, Westinghouse Hanford Company, Richland, Washington.

9513354.0074

APPENDIX A

WASTE DESCRIPTIONS AND VOLUME CALCULATIONS

CONTENTS

A.1.0 WASTE SITE INFORMATION SUMMARY A-1
A.1.1 RETENTION BASINS AND OTHER CONCRETE STORAGE FACILITIES A-1
A.1.2 EFFLUENT PIPELINES A-2
A.1.3 OUTFALL STRUCTURES A-3
A.1.4 LIQUID WASTE DISPOSAL FACILITIES A-4
A.1.5 BURIAL GROUNDS AND LANDFILLS A-5
A.1.6 UNPLANNED RELEASES A-6
A.1.6.1 Radioactive Liquids A-6
A.1.6.2 Petroleum Fuels A-6
A.1.6.3 Chemical Liquids A-6
A.1.6.4 Solid Waste A-6
A.1.7 MISCELLANEOUS SITES A-6
A.1.7.1 Landfills and Burial Grounds A-7
A.1.7.2 Wash Pit A-7

A.2.0 CONTAMINANTS OF CONCERN A-8

A.3.0 CATEGORIES OF WASTE SITES A-14

A.4.0 TOTAL EXCAVATION VOLUME CALCULATIONS AND VOLUME CALCULATION OF EACH WASTE TYPE A-16
A.4.1 ASSUMPTIONS A-16
A.4.1.1 General Use Option A-16
A.4.1.2 Industrial Use Option A-34
A.4.1.3 Summary A-37

A.5.0 REFERENCES A-40

FIGURES:

A.4-1 Waste Volume Distribution, General Use Option A-38

A.4-2 Waste Volume Distribution, Industrial Use Option A-39

TABLES:

A.2-1 100 Areas Contaminants of Concern A-9

A.3-1 Categories of Waste Sites A-15

A.4-1 Categorized Waste Site Database A-17

A.4-2 Total Excavation Volume Calculations A-27

APPENDIX A

WASTE DESCRIPTIONS AND VOLUME CALCULATIONS

A.1.0 WASTE SITE INFORMATION SUMMARY

A.1.1 RETENTION BASINS AND OTHER CONCRETE STORAGE FACILITIES

Two types of retention basins were used in the 100 Areas, rectangular concrete and circular steel. The concrete basins have baffles, many of which have been demolished and used as fill within the basins. Except for 116-F-14, all basins are in good structural condition. All basins are partially filled with dirt. Portions of the D, F and H basin walls above the soil layer have been sprayed with asphalt to contain radionuclides. Statistics for basins in each of the areas are tabulated as follows.

Concrete Retention Basins

Area	Site number	Dimensions	Total volume (yd^3)	Concrete volume (yd^3)
B	116-B-11	230 ft x 467 ft x 20 ft deep	80,000	4,200
D	116-D-7	230 ft x 467 ft x 20 ft deep	80,000	4,200
DR	116-DR-9	273 ft x 600 ft x 20 ft deep	120,000	7,000
F	116-F-14	230 ft x 467 ft x 20 ft deep	80,000	4,200
H	116-H-6 116-H-7	N/A 273 ft x 600 ft x 20 ft deep	N/A 120,000	N/A 7,000
		Totals	480,000	26,600

N/A = Information not available.

Steel Retention Basins

Area	Site number	Dimensions	Total volume (yd^3)
C	116-C-5	2 tanks, 330 ft dia. x 16 ft deep	101,000
KE	116-KE-4	3 tanks, 250 ft dia. x 29 ft deep	158,000
KW	116-KW-3	3 tanks, 250 ft dia. x 29 ft deep	158,000
		Total	417,000

Radioactive material is primarily in the sludge on the basin floors and in the soil surrounding the basins where leakage occurred. According to the cited reference, total activity in, below, and around the basins is typically about 100 Ci with about 1 Ci of plutonium. The majority of the nontransuranic (non-TRU) inventory consists of ^{63}N, ^{152}Eu, ^{154}Eu, and ^{60}Co.

Six of the waste units are buried concrete storage facilities that will require demolition in a manner similar to the retention basins. Each is described as follows (DOE-RL 1991):

- 118-KE-2--Concrete tunnel (unspecified dimensions) covered with 5 ft of earth; 1 mR/h at tunnel entrance; tunnel is presently empty
- 118-KW-2--Concrete tunnel, 40 ft long, covered with 5 ft of earth; 50 mr/h at tunnel entrance; tunnel is presently empty
- Four brine pits in 100-KE and -KW areas--Partially buried concrete pits used to store and prepare brine (salt) solutions for use in the power houses; contain brine residues but no radioactive wastes.

A.1.2 EFFLUENT PIPELINES

Each reactor coolant effluent line system runs from the reactor building to the retention basin, from the retention basin to the outfall structure, and from the outfall structure to the middle of the river. There is from 1 to 4 mi of spillways or subsurface lines per reactor site. The pipelines range in size from 12 to 84 in. in diameter and are constructed of carbon steel or reinforced concrete. The lines have inspection manholes, junction boxes, tie-lines between parallel legs, and valves. Pipeline physical data are provided in the table below.

Steel Pipe

Area	Length (ft)					
	Pipe diameter (in.)					
	12-16	18-24	36-42	60-72	84	Total length
B	180	1,445	750	14,710	--	17,085
D	140	1,470	3,720	9,900	--	15,230
F	--	--	2,605	--	--	2,605
H	350	1,090	--	4,400	--	5,840
K	6,010	410	6,725	5,380	2,600	21,125
Totals	6,680	4,415	13,800	34,390	2,600	61,885

Concrete Pipe

Area	Length (ft)			
	Pipe diameter (ft)			
	30-36	42-48	60-72	Totals
B	2,085	3,240	50	5,375
D	300	400	2,340	3,040
F	470	2,300	350	3,120
H	--	--	--	--
K	--	--	835	835
Totals	2,855	5,940	3,575	12,370

The effluent pipes are sealed to prevent the spread of residual radionuclides and personnel entry. The junction boxes are sealed or filled with gravel. The aboveground portion of the pipes at 100-F have been removed and are stored in the 100-F retention basin. The remaining effluent pipes are presently buried, some to a depth of 15 ft. As reported in 1984, the physical condition of the effluent pipe was generally good, with little evidence of extensive corrosion.

Radiological surveys taken in 1976 of the B, C, and F pipelines indicated direct readings of the bottom of the lines at an average of approximately 40,000 cpm with a Geiger-Mueller (GM) probe. The radionuclides present are essentially the same as those listed for the retention basins.

Soil contamination was characterized in 1976 in the immediate vicinity of junction boxes up to 2,500 cpm with a GM probe taken at depths of 20 to 30 ft below grade. At the same depth, contamination was found to extend 25 ft away from the lines at approximately 1,000 cpm (GM).

A.1.3 OUTFALL STRUCTURES

The outfall structures are reinforced compartmentalized concrete water boxes. Spillways are constructed of reinforced concrete or a rip-rap-filled flume. Most outfalls are 27 ft long by 14 ft wide, with walls 1 ft above grade and 25 ft below grade. One exception is the 1908-K outfall, which is 30 ft long by 40 ft wide, with walls extending 20 ft above grade and 20 ft below grade. Most of the outfalls have been reduced to near-grade level and backfilled with clean dirt to prevent the spread of residual radionuclides. The 1904-B1 and 1908-K outfalls are presently still in operation. The radionuclides present are essentially the same as those listed for the retention basins. The exposure rate from the sludge is generally less than 1 mR/h and the contamination is less than 3,000 cpm.

A.1.4 LIQUID WASTE DISPOSAL FACILITIES

Liquid waste disposal facilities include cribs, trenches, and French drains. A crib is a buried disposal unit, usually rock filled and equipped with a liquid dispersion system. Various crib designs were used. A number of the earlier cribs used wood timbers, typically in a 10- by 10-ft structure, open only at the bottom and buried 14 to 30 ft below land surface. Cribs of this type range from 100 to 200 ft^2 in area. Some cribs were a dual structure, with overflow from one to the other. Some included overflow tile fields to disperse the liquids over a wider area. The 116-C-2C crib was larger (80 by 40 ft at the bottom) and equipped with a sand filter, a 16- by 23- by 5-ft open-bottomed concrete box partially filled with sand and gravel. The 116-K-1 crib is a large crib, 200 by 200 ft at the bottom and 400 by 400 ft at the top of diked sides (Dorian and Richards 1978).

The most recently used crib is 116-N-1 (DOE-RL 1990). The crib is 290 by 125 ft, and the bottom is 12 ft below grade. The crib connects to a zig-zag extension trench 50 ft wide, 12 ft in depth, and 1,600 ft long. A 3-ft layer of boulders was placed in the crib, and precast concrete cover panels were placed over the trench.

French drains are typically 3- to 4-ft-diameter concrete or vitreous clay pipe filled with gravel. Depths range from 3 to 20 ft (Stenner et al. 1988).

Trenches were open excavations into which liquid effluents were disposed to the soil by percolation. Trenches varied in width from about 10 to 100 ft (at the bottom) and in depth from 6 to 25 ft (Stenner et al. 1988). The longest trench is 116-K-2, which extended for about 4,100 ft. Trenches were backfilled with clean dirt.

With the exception of the 116-N-1 crib, the liquid waste disposal facilities contained about 3,000 Ci of radionuclides as of April 1983. About 2,100 Ci of this activity is contained within the 116-K-2 trench. Other liquid waste disposal crib and trench inventories range from less than 1 mCi to 300 Ci. Plutonium concentrations up to 130 pCi/g remain in the 116-K-1 trench and average 8.5 pCi/g in the surrounding soil. The 116-K-2 trench contains about 5 Ci of plutonium, the highest plutonium inventory of the liquid waste disposal facilities (with the exception of the 116-N-1 crib).

The 116-N-1 crib and trench is somewhat of a special case among the liquid waste sites in that the levels of radioactive contamination are much higher than other 100 Area facilities. The cumulative inventory (accounting for decay to September 1985) of selected radionuclides is as follows (DOE-RL 1990):

Radionuclide	Inventory (Ci)
^{60}Co	3,800
^{90}Sr	1,800
^{106}Ru	120
^{134}Cs	51
^{137}Cs	2,300

A.1.5 BURIAL GROUNDS AND LANDFILLS

Burial grounds are excavated burial trenches and pits that contain solid wastes, with a backfill of clean soil. A total of 25 radioactive solid waste burial grounds were used in the 100 Area facilities, including 2 in the 100-F Area for disposal of radioactive wastes generated by biology laboratories. Ten of the twenty-five burial grounds near the reactor buildings were small, ranging in size up to a few feet wide and several feet long. The larger burial grounds generally consisted of pits or parallel trenches, 20 ft deep, 150 to 300 ft long, with a bottom width of 5 to 8 ft and a top width of 20 ft. The largest burial ground is 118-K-1, which is approximately 600 by 1,200 ft. There are approximately 73 total acres of burial grounds in the 100 Areas.

A typical burial trench consisted of layers of hard wastes and soft wastes. The hard wastes, consisting of metal reactor parts and fuel components, were usually placed in the bottom of the trenches, about 20 ft below the surface. Most of the radioactivity in these burial sites is contained in these hard wastes. Even though the hard wastes comprise less than 25% of the volume of buried wastes, they contain more than 99% of the total radionuclide inventory.

Soft waste, consisting of contaminated paper, plastic, and clothing packed in cardboard cartons, makes up greater than 75% of the volume in the trenches but contains less than 1% of the total radionuclide inventory. The soft waste typically was emplaced above the hard waste with about 2 ft of clean soil backfill separating the two. About 4 ft of backfill covered the soft waste and another 4 ft of earth cover was piled on top of that so that the cover extended about 4 ft from the surrounding land surface.

Inventory estimates for a typical reactor burial trench include 153 tons of aluminum process tubes and spacers, 1 ton of control rods and miscellaneous steel components, and 100,000 boxes (4.5 ft^3 each) of soft waste. Corresponding radionuclide inventories (decayed to March 1985) are estimated at 920 Ci total inventory per trench of which about 890 Ci is contained in the aluminum waste, 10 Ci in the control rod/steel waste, and 20 Ci in the soft waste. More than 90% of the radionuclide activity is ^{60}Co, a gamma emitter.

Three of the burial grounds contain buried concrete vaults/structures that must be demolished before the waste is removed. These are described as follows:

- 118-F-7--Concrete box with wooden cover containing radioactive failed reactor parts
- 118-H-2--Two in-line concrete vaults containing radioactive metal hardware
- 126-B-2--Reinforced concrete pump room; 22 ft deep containing concrete from demolition of aboveground portion of pump room; this unit is classified as nonhazardous, nonradioactive.

A.1.6 UNPLANNED RELEASES

Unplanned released primarily consisted of line leaks and spills during liquid transfers. Of the 35 unplanned releases within the scope of this study, all but 2 occurred in the 100-N Area. Except for one release, all leaks and spills involved release of liquids that were either low-level radioactive liquids, nonradioactive petroleum products, or nonradioactive chemicals. The one exception involved a large valve that fell from a truck.

The characteristics of the releases are highly variable. However, the releases can be generally categorized and described as follows (DOE-RL 1991).

A.1.6.1 Radioactive Liquids

Twenty releases of radioactively contaminated liquids ranged from less than 100 gal to greater than 500,000 gal; most were pipeline leaks, but some involved overflow of vessels during material transfers. Contamination consisted of mixed radionuclides including TRU (plutonium). Contamination release estimates ranged from very low (less than 1 mCi) to moderate (about 35 Ci). Many of the releases were remediated to some extent by removal of contaminated soil and/or covering with clean soil to prevent further spreading.

A.1.6.2 Petroleum Fuels

Nine releases of nonradioactive petroleum fuel spills included eight spills of diesel and/or fuel oil and one spill of gasoline; spills were mostly pipeline leaks ranging from 200 to 80,000 gal.

A.1.6.3 Chemical Liquids

Of the five releases of nonradioactive chemical solutions, two involved a mixture of phosphoric acid and dimethylthiourea and three involved concentrated sulfuric acid. Spill volumes ranged from about 500 to 3,500 gal. Acid spills were neutralized with alkaline chemicals.

A.1.6.4 Solid Waste

One release involved a large valve bonnet, highly contaminated with radionuclides, which fell from a truck and contaminated an area of soil; contaminated soil was removed.

A.1.7 MISCELLANEOUS SITES

This category of sites includes miscellaneous burial grounds, landfills, and a wash pit that, by the nature of their contained wastes, do not fit into the categories given previously. These sites are within the 100-IU operable units. A brief description of these follows (DOE-RL 1991).

A.1.7.1 Landfills and Burial Grounds

- East White Bluffs City Landfill--Conventional industrial/domestic wastes; no radioactive materials
- White Bluffs Landfill--Conventional commercial/domestic wastes; no radioactive materials
- U.S. Bureau of Reclamation Landfill--Fifty yards of soil and 10 tanks contaminated with 900 gal of 2,4-D pesticide
- Sodium Dichromate Barrel Disposal Landfill--Crushed barrels (unspecified quantities) containing sodium dichromate
- J.A. Jones 2 Burial Ground--Minor construction equipment including wood scraps, concrete, and some metallic wastes; exhumed in 1971 and backfilled to grade
- 600 Area Army Munitions Burial Site--Military explosives including blast simulators, fuse ignitors, blasting caps, detonating cords, grenade remnants; all items were removed and destroyed in 1986.

A.1.7.2 Wash Pit

- Riverland Railroad Car Wash Pit--Received wash water from steam cleaning locomotive engines and cars; decontaminated in 1963 and released for public use; classified as nonhazardous, nonradioactive.

A.2.0 CONTAMINANTS OF CONCERN

The contaminants of concern are listed in Table A.2-1. This list is conservative in that a constituent is sometimes proposed as a contaminant of concern based solely on a record of usage of a chemical, even though there either may be no indication that the chemical has been disposed of to the environment or if disposed, the quantities of disposal may not be significant.

Table A.2-1. 100 Areas Contaminants of Concern. (sheet 1 of 5)

	Operable unit										
	Notes	100-DR-1	100-HR-1	100-HR-3	100-BC-1	100-BC-5	100-KR-1	100-KR-4	100-NR-1	100-NR-3	100-FR-1
Radionuclides											
H-3	2	x	x	x	x	x	x	x	x		x
C-14	2	x	x		x	x	x	x	x		
Ca-41							x				
Cr-51							x				
Mn-54									x	x	
Co-60	2	x	x		x	x	x	x	x	x	x
Zn-65							x				
Se-79	1		x								
Ni-63		x	x	x	x	x	x	x	x		
Sr-90	2	x	x	x	x	x	x	x	x		x
Zr-93	1		x								
Nb-94	1		x								
Tc-99			x				x		x		x
Ru-103									x	x	
Ru-106			x	x					x		x
Pd-107			x								
Cd-113	1		x								
Sb-125									x		

9513354.0080

Table A.2-1. 100 Areas Contaminants of Concern. (sheet 2 of 5)

	Operable unit										
	Notes	100-DR-1	100-HR-1	100-HR-3	100-BC-1	100-BC-5	100-KR-1	100-KR-4	100-NR-1	100-NR-3	100-FR-1
I-129							x		x		
Cs-134		x	x		x	x	x	x			x
Cs-137	2	x	x		x	x	x	x	x	x	x
Sm-151	1		x								
Eu-152	2	x	x		x	x	x	x			x
Eu-154	2	x	x		x	x	x	x			x
Eu-155	2	x	x		x	x	x	x			x
Ra (unspecified isotope)									x		
U-235		x	x		x	x		x			
U-238		x	x	x	x	x		x			
U (unspecified isotopes)									x		x
Pu-238		x	x		x	x	x	x	x		x
Pu-239	2	x	x		x	x	x	x	x		x
Pu-240	2	x	x		x	x	x	x	x		x
Pu-241	1		x								
Am (unspecified isotope)									x		
Am-241	1		x				x				

Table A.2-1. 100 Areas Contaminants of Concern. (sheet 3 of 5)

	Operable unit										
	Notes	100-DR-1	100-HR-1	100-HR-3	100-BC-1	100-BC-5	100-KR-1	100-KR-4	100-NR-1	100-NR-3	100-FR-1
Metals											
Al			x						x		
As							x		x		x
B									x		x
Ba			x						x		x
Be									x		
Ca									x		
Cd			x	x					x		x
Cr		x	x	x	x	x	x	x	x		x
Cu			x	x	x	x	x	x	x		
Fe			x	x					x		
Hg			x		x	x	x	x			
K							x		x		
Li									x		x
Mg									x		
Na									x		
Ni									x		x
Pb			x	x					x		
Sr									x		
Ti									x		

9513354.0081

Table A.2-1. 100 Areas Contaminants of Concern. (sheet 4 of 5)

	Operable unit										
	Notes	100-DR-1	100-HR-1	100-HR-3	100-BC-1	100-BC-5	100-KR-1	100-KR-4	100-NR-1	100-NR-3	100-FR-1
Metals											
V									x		x
Zn							x		x		x
Nonmetallic ions											
Ammonia/ammonium							x		x		x
Chloride							x		x		
Cyanide									x		
Fluoride		x	x	x			x		x		x
Nitrate		x	x	x	x	x	x		x		x
Nitrite			x								
Oxalate				x			x				
Phosphate									x		
Sulfate		x	x				x		x		
Sulfamate							x				
Volatile organic compounds											
Chloroform			x	x					x		
Tetrachloroethene			x	x					x		
1,1,1 trichloroethane			x	x							
4-methyl-2pentanone									x		
Acetone									x		x

Table A.2-1. 100 Areas Contaminants of Concern. (sheet 5 of 5)

	Operable unit										
	Notes	100-DR-1	100-HR-1	100-HR-3	100-BC-1	100-BC-5	100-KR-1	100-KR-4	100-NR-1	100-NR-3	100-FR-1
Methyl isobutyl ketone									x		
Trans 1,2 dichlorethene									x		
Ethylbenzene									x		
Methylene chloride											x
Trichloroethene											x
Hexane											x
Other organics											
Herbicides							x				
PCBs					x	x	x	x			
Bis-2-ethylhexyl phthalate									x		
Chlorobenzene									x		
Cyclotetrasiloxane, octomethyl									x		
Hydrazine									x		
Morpholine									x		
Tetraethylpyrophosphate									x		
Tetrahydrofuran									x		
Thiourea									x		
Diesel fuel										x	

Source: 100 Area operable unit work plans and Dorian and Richards (1978).
NOTES: 1. Constituent found in spent fuel elements only.
2. Principal radioactive contaminants in cribs and trenches (Dorian and Richards 1978; p. 3-8).

9513354.0082

A.3.0 CATEGORIES OF WASTE SITES

Attachment 2 to the Statement of Work provided a database listing of the waste sites included in the 100 Aggregate Area and also provided an estimate of the volume of contaminated soil located beneath each waste site. A categorization scheme was developed to sort the waste sites on the following primary bases:

- Those sites that contain buried solid waste
- Those sites that only contain contaminated soil
- Those sites that contain minor amounts of structures
- Those sites that contain significant amounts of structures.

The categories were established in anticipation of selecting excavation and demolition process options; i.e., it was anticipated that equipment necessary to excavate buried solid waste may be different than that necessary to demolish a massive structure such as a concrete retention basin. Waste sites with similar waste-form properties were categorized together (e.g., reverse wells and cribs). Table A.3-1 identifies the categories, the associated waste forms, and the types of waste sites included in each category. The categorization scheme is incorporated into Table A.4-1.

Table A.3-1. Categories of Waste Sites.

Category	Waste contributor types/ relative ratios		Waste management unit types
	Major contributor	Minor contributor	
1	Soil, buried waste	None	Burial grounds associated with reactor and/or ancillary facilities operation
2	Soil, nonradioactive buried waste	None	Industrial landfills (nonreactor, hazardous waste only)
3	Soil	None (negligible piping)	Riverland railroad car wash pit unplanned releases (solid), unplanned releases (liquid), army munitions burial ground, and J.A. Jones 2 burial ground
4	Soil	Structural demolition waste (concrete, timbers), metals (piping)	Trenches, French drains, cribs, sand filters, and reverse wells
5	Soil, structural demolition waste (concrete), metal (tanks, piping)	None	Concrete retention basins, steel tank retention basins, storage facilities, brine pits, outfall structures, and associated effluent pipelines
6	Soil, structural demolition waste, buried waste	None	Burial grounds with concrete vaults, demolition, and inert landfill

A.4.0 TOTAL EXCAVATION VOLUME CALCULATIONS AND VOLUME CALCULATION OF EACH WASTE TYPE

A.4.1 ASSUMPTIONS

A.4.1.1 General Use Option

1. The Westinghouse Hanford Company database of waste sites, dimensions, and volumes of contaminated soil located beneath the disposal units is reproduced in Table A.4-1. The total volume of contaminated soil located beneath the disposal units plus 10% is approximately 249,209,000 bank cubic feet (Bft^3). Volume assumes excavation extends to a depth of 33 ft below the disposal unit, consistent with the General Use Option.

2. Shoring of excavations is assumed to be unnecessary; instead, excavations will be laid back to the natural angle of repose. The natural angle of repose of Hanford soils is assumed to be 1.5:1 (Adams 1992, p. 30).

3. The total amount of excavated material at a given waste site is composed of clean overburden, clean material from the side slopes of the excavation, solid wastes associated with the disposal unit (e.g., buried waste, structural components of the unit), and the contaminated soil beneath the disposal unit.

   The total amount of excavated material for the 100 Aggregate Area is approximately 809,522,000 Bft^3 for the General Use Option. The calculation spreadsheet for this value is given in Table A.4-2.

4. The burial ground wastes (B) are comprised of buried metals (M_b), buried demolition wastes (D_b), and combustibles (C).

   The buried metals and buried demolition wastes are in addition to the metals and demolition wastes associated with the other disposal units. Assumption based on interpretation of Statement of Work (SOW).

   The burial ground wastes (B) comprise 10% of the total volume of excavated waste (E) (Field and Henckel 1990, p. 4).

   Discrete metals (M) not located in the burial grounds comprise 10% of the total volume of excavated waste (E) (interpretation and SOW, p. 4).

   Demolition wastes (D) not located in the burial grounds comprise 10% of the total volume of excavated waste (E) (interpretation and SOW, p. 4).

70%	contaminated soil (S)
10%	discrete metals (M)
10%	demolition wastes (D)
10%	burial ground wastes (B)
100%	total volume of excavated waste (E)

Table A.4-1. Categorized Waste Site Database. (sheet 1 of 10)

GENERAL USE OPTION											
Disposal Unit Category	Disposal Unit Name	Operable Unit	Disposal Unit Type	Disposal Unit Dimensions length	width	thickness	Contaminated Soil	Excavation Length	Excavation Width	Excavation Surface Area	Overburden
1	118-B-5	100-BC-1	burial ground 50	50	50	20	330,000	359	359	128,881	2,573,181
1	118-B-7	100-BC-1	burial ground .5	8	8	8	111,010	231	231	53,361	1,118,621
1	118-B-2	100-BC-3	burial ground 18	60	30	10	290,400	289	259	74,851	1,646,836
1	118-B-3	100-BC-3	burial ground 1925	350	275	20	4,290,000	609	534	325,206	8,576,519
1	118-B-4	100-BC-3	burial ground 10	100	10	10	264,000	329	239	78,631	1,780,306
1	118-B-6	100-BC-3	burial ground 32	40	40	20	267,300	299	299	89,401	2,397,911
1	118-B-1	100-BC-4	burial ground 6420	1000	321	20	12,855,150	1,259	580	730,220	18,544,515
1	118-C-1	100-BC-4	burial ground 2060	510	400	15	8,316,000	754	644	485,576	10,491,936
1	118-D-5	100-DR-2	burial ground 8	20	20	20	267,300	379	379	143,641	1,953,771
1	118-D-1	100-DR-3	burial ground 2400	600	200	20	7,012,500	859	459	394,281	8,777,631
1	118-D-2	100-DR-3	burial ground 3375	450	375	20	14,206,500	709	634	449,506	4,405,219
1	118-D-3	100-DR-3	burial ground 7200	1000	360	20	10,395,000	1,259	619	779,321	23,442,691
1	118-D-4	100-DR-3	burial ground 5000	1000	250	20	5,362,500	1,259	509	640,831	21,598,706
1	118-DR-1	100-DR-3	burial ground 140.6	125	75	15	721,880	369	319	117,711	2,882,296
1	118-F-1	100-FR-2	burial ground 6000	600	500	20	11,797,500	859	759	651,981	16,386,681
1	118-F-2	100-FR-2	burial ground 2400	368	326	20	5,186,540	627	585	366,795	9,593,464
1	118-F-3	100-FR-2	burial ground 131.2	175	50	15	742,500	419	294	123,186	3,038,076
1	118-F-4	100-FR-2	burial ground 1	10	10	10	118,800	239	239	57,121	1,250,191
1	118-F-5	100-FR-2	burial ground 1125	500	150	15	3,630,000	744	394	293,136	6,839,376
1	118-F-6	100-FR-2	burial ground 1600	400	200	20	3,712,500	659	459	302,481	8,054,931
1	118-H-1	100-HR-2	burial ground 4900	700	350	20	9,900,000	959	609	584,031	14,893,506
1	118-H-3	100-HR-2	burial ground 1200	300	200	20	2,887,500	559	459	256,581	6,868,581
1	118-H-4	100-HR-2	burial ground 45	150	30	10	528,000	379	259	98,161	2,161,951
1	118-H-5	100-HR-2	burial ground .6	30	10	2	158,400	235	215	50,525	911,725
1	118-K-1	100-KR-2	burial ground 14400	1200	600	20	26,812,500	1,459	859	1,253,281	30,291,131
				Category Subtotal			130,163,780			8,528,697	210,479,752
2	E White Bluffs	100-IU-2	ind landfill 100	100	100	10	742,500	329	329	108,241	2,325,421
2	White Bluffs	100-IU-2	ind landfill 62.5	125	50	10	577,500	354	279	98,766	2,152,334
2	USBR 2,4-D Burial	100-IU-3	ind landfill 19.2	400	12	4	920,700	611	223	136,253	2,560,001
2	Barrel Disposal	100-IU-4	ind landfill 50	100	50	10	495,000	329	279	91,791	2,004,246
				Category Subtotal			2,735,700			435,051	9,042,002
3	Army munitions	100-IU-1	burial ground .1	3	2	10	90,950	232	231	53,592	1,167,897

9513351.0084

Table A.4-1. Categorized Waste Site Database.
(sheet 2 of 10)

3	JA Jones 2	100-IU-2	burial ground	9	30	30	10	132,000	259	259	67,081	1,554,331
3	UN-100-F-1	100-FR-1	UPR - liquid	16	40	40	10	267,300	269	269	72,361	1,590,601
3	UN-100-K-1	100-KR-2	UPR - liquid	16	40	40	10	267,300	269	269	72,361	1,590,601
3	UN-100-N-13	100-NR-1	UPR - liquid	.1	2	3	10	90,950	232	231	53,592	1,167,897
3	UN-100-N-14	100-NR-1	UPR - liquid	7.8	28	28	10	200,770	257	257	66,049	1,452,279
3	UN-100-N-17	100-NR-1	UPR - liquid	7.8	28	28	10	200,770	257	257	66,049	1,452,279
3	UN-100-N-20	100-NR-1	UPR - liquid	7.8	28	28	10	200,770	257	257	66,049	1,452,279
3	UN-100-N-24	100-NR-1	UPR - liquid	7.8	28	28	10	200,770	257	257	66,049	1,452,279
3	UN-100-N-25	100-NR-1	UPR - liquid	7.8	28	28	10	200,770	257	257	66,049	1,452,279
3	UN-100-N-26	100-NR-1	UPR - liquid	7.8	28	28	10	200,770	257	257	66,049	1,452,279
3	UN-100-N-31	100-NR-1	UPR - liquid	25	50	50	10	330,000	279	179	49,941	1,708,071
3	UN-100-N-4	100-NR-1	UPR - liquid	15.2	39	39	10	261,390	268	268	71,824	1,578,967
3	UN-100-N-5	100-NR-1	UPR - liquid	15.2	39	39	10	261,390	268	268	71,824	1,578,967
3	UN-100-N-8	100-NR-1	UPR - liquid	.3	5	5	10	99,830	234	234	54,756	1,195,201
3	UN-100-N-9	100-NR-1	UPR - liquid	.3	5	5	10	99,830	234	234	54,756	1,195,201
3	UN-100-N-1	100-NR-2	UPR - liquid	1.4	12	12	10	126,850	241	241	58,081	1,272,327
3	UN-100-N-10	100-NR-2	UPR - liquid	1	10	10	10	118,800	239	239	57,121	1,250,191
3	UN-100-N-12	100-NR-2	UPR - liquid	.1	2	3	10	90,950	232	231	53,592	1,167,897
3	UN-100-N-2	100-NR-2	UPR - liquid	2.9	17	17	10	148,140	246	246	60,516	1,328,007
3	UN-100-N-29	100-NR-2	UPR - liquid	1.2	30	4	10	142,560	259	233	60,347	1,326,320
3	UN-100-N-3	100-NR-2	UPR - liquid	.2	4	4	10	96,230	233	233	54,289	1,184,267
3	UN-100-N-30	100-NR-2	UPR - liquid	25	50	50	10	330,000	279	279	77,841	1,708,071
3	UN-100-N-32	100-NR-2	UPR - liquid	25	50	50	10	330,000	279	279	77,841	1,708,071
3	UN-100-N-35	100-NR-2	UPR - liquid	25	50	50	10	330,000	279	279	77,841	1,708,071
3	UN-100-N-7	100-NR-2	UPR - liquid	15.2	39	39	10	261,390	268	268	71,824	1,578,967
3	UN-100-N-15	100-NR-3	UPR - liquid	7.8	28	28	10	200,770	257	257	66,049	1,452,279
3	UN-100-N-18	100-NR-3	UPR - liquid	7.8	28	28	10	200,770	257	257	66,049	1,452,279
3	UN-100-N-19	100-NR-3	UPR - liquid	7.8	28	28	10	200,770	257	257	66,049	1,452,279
3	UN-100-N-21	100-NR-3	UPR - liquid	7.8	28	28	10	200,770	257	257	66,049	1,452,279
3	UN-100-N-22	100-NR-3	UPR - liquid	7.8	28	28	10	200,770	257	257	66,049	1,452,279
3	UN-100-N-23	100-NR-3	UPR - liquid	7.8	28	28	10	200,770	257	257	66,049	1,452,279
3	UN-100-N-33	100-NR-3	UPR - liquid	25	50	50	10	330,000	279	279	77,841	1,708,071
3	UN-100-N-34	100-NR-3	UPR - liquid	25	50	50	10	330,000	279	279	77,841	1,708,071
3	UN-100-N-6	100-NR-3	UPR - liquid	15.2	39	39	10	261,390	268	268	71,824	1,578,967
3	UN-600-17	100-NR-3	UPR - liquid	25	50	50	10	330,000	279	279	77,841	1,708,071
3	UN-100-N-11	100-NR-3	UPR - solid	1	10	10	10	118,800	239	239	57,121	1,250,191
3	Riverland wash pit	100-IU-1	wash pit	2.4	40	6	10	166,320	269	235	63,215	1,392,602
					Category Subtotal			7,821,610			2,489,652	55,333,244

Table A.4-1. Categorized Waste Site Database.
(sheet 3 of 10)

4	116-B-12	100-BC-1	crib	1	10	10	10	118,800	239	239	57,121	1,250,191
4	116-B-3	100-BC-1	crib	1	10	10	10	118,800	239	239	57,121	1,250,191
4	116-B-5	100-BC-1	crib	134	84	16	10	291,850	313	245	76,685	1,696,513
4	116-B-6A	100-BC-1	crib	.6	12	8	6	118,670	229	225	51,525	1,032,961
4	116-B-6B	100-BC-1	crib	.9	4	8	6	103,360	225	221	49,725	996,323
4	116-C-2A	100-BC-2	crib	280	140	100	20	940,500	399	359	143,241	3,904,071
4	116-D-2	100-DR-1	crib	1	10	10	10	118,800	239	239	57,121	1,250,191
4	116-D-9	100-DR-1	crib	1	10	10	10	118,800	239	239	57,121	1,250,191
4	116-DR-4	100-DR-2	crib	1	10	10	10	118,800	239	239	57,121	1,250,191
4	116-DR-7	100-DR-2	crib	.3	5	5	10	99,825	234	234	54,756	1,195,206
4	116-DR-8	100-DR-2	crib	1	10	10	10	118,800	239	239	57,121	1,250,191
4	116-F-4	100-FR-1	crib	1	10	10	10	118,800	239	239	57,121	1,250,191
4	116-F-5	100-FR-1	crib	1	10	10	10	118,800	239	239	57,121	1,250,191
4	116-H-4	100-HR-1	crib	.1	4	4	2	96,230	209	209	43,681	793,155
4	116-H-9	100-HR-1	crib	1	10	10	10	118,800	239	239	57,121	1,250,191
4	White Bluffs crib	100-IU-5	crib	15	50	30	10	264,000	279	279	77,841	1,589,601
4	116-K-1	100-KR-1	crib	1600	400	400	10	na	629	629	395,641	7,052,021
4	116-KE-1	100-KR-2	crib	41.6	40	40	26	267,300	317	317	100,489	2,967,257
4	116-KE-2	100-KR-2	crib	8.2	16	16	32	143,750	311	311	96,721	3,025,065
4	116-KW-1	100-KR-2	crib	41.6	40	40	26	267,300	317	317	100,489	2,967,257
4	116-N-1	100-NR-1	crib	425	290	125	12	1,963,500	525	360	189,000	4,126,688
4	116-B-10	100-BC-1	french drain	.1	3	3	7	92,700	223	223	49,729	1,018,060
4	116-B-4	100-BC-1	french drain	.2	4	4	20	96,230	263	263	69,169	1,800,057
4	116-B-9	100-BC-1	french drain	.1	4	4	3	96,230	212	212	44,944	837,466
4	116-D-3	100-DR-1	french drain	.1	3	3	5	92,700	217	217	47,089	921,254
4	116-D-4	100-DR-1	french drain	.1	3	3	5	92,700	217	217	47,089	921,254
4	116-D-6	100-DR-1	french drain	.1	3	3	3	92,700	211	211	44,521	829,656
4	116-F-10	100-FR-1	french drain	.1	3	3	10	92,700	232	232	53,824	1,173,349
4	116-F-11	100-FR-1	french drain	.1	3	3	3	92,700	211	211	44,521	829,656
4	116-F-12	100-FR-1	french drain	.1	3	3	6	92,700	220	220	48,400	968,997
4	116-F-13	100-FR-1	french drain	.1	3	3	3	92,700	211	211	44,521	829,656
4	116-F-7	100-FR-1	french drain	.2	4	4	20	96,230	263	263	69,169	1,800,057
4	116-H-3	100-HR-1	french drain	.7	3	3	15	92,700	247	247	61,009	1,460,244
4	120-KE-1	100-KR-3	french drain	.1	4	4	4	96,230	215	215	46,225	883,049
4	120-KE-2	100-KR-3	french drain	.1	3	3	3	92,700	211	211	44,521	829,656
4	120-KW-1	100-KR-3	french drain	.1	4	4	4	96,230	215	215	46,225	883,049
4	120-KW-2	100-KR-3	french drain	.1	3	3	3	92,700	211	211	44,521	829,656
4	120-N-3	100-NR-3	french drain	.1	3	3	3	92,700	211	211	44,521	829,656
4	120-N-6	100-NR-3	french drain	.1	3	3	3	92,700	211	211	44,521	829,656

9513354.0085

Table A.4-1. Categorized Waste Site Database.
(sheet 4 of 10)

4	120-N-7	100-NR-3	french drain	1	3	3	3	92,700	211	211	44,521	829,656
4	120-N-8	100-NR-3	french drain	1	3	3	3	92,700	211	211	44,521	829,656
4	116-KE-3	100-KR-2	reverse well	3.0	10	10	39	10,380	326	326	106,276	3,691,284
4	116-KW-2	100-KR-2	reverse well	3.0	10	10	39	10,370	326	326	106,276	3,691,294
4	116-C-2C	100-BC-2	sand filter	2.2	23	16	6	158,990	240	233	55,920	1,120,698
4	116-B-1	100-BC-1	trench	33.5	50	50	15	660,000	294	294	86,436	1,788,576
4	116-B-13	100-BC-1	trench	20	100	10	20	330,000	359	269	96,571	2,588,816
4	116-B-14	100-BC-1	trench	17	120	10	15	336,600	364	254	92,456	2,297,256
4	116-B-2	100-BC-1	trench	7.8	130	10	6	247,500	347	227	78,769	1,692,867
4	116-C-1	100-BC-1	trench	625	500	50	25	1,815,000	774	324	250,776	7,774,836
4	116-D-1A	100-DR-1	trench	90	300	15	20	356,400	559	274	153,166	4,698,184
4	116-D-1B	100-DR-1	trench	30	150	10	20	297,000	409	269	110,021	3,123,991
4	116-DR-1	100-DR-1	trench	7.8	130	10	6	750,750	347	227	78,769	1,189,617
4	116-DR-2	100-DR-1	trench	15	100	10	15	396,000	344	254	87,376	2,063,136
4	116-DR-3	100-DR-2	trench	24	60	40	10	326,700	289	269	77,741	1,707,071
4	116-DR-6	100-DR-2	trench	5	50	10	10	198,000	279	239	66,681	1,471,131
4	116-F-1	100-FR-1	trench	1200	3000	40	10	9,058,500	3,229	269	868,601	18,828,161
4	116-F-2	100-FR-1	trench	225	300	50	15	1,155,000	544	294	159,936	3,957,576
4	116-F-3	100-FR-1	trench	22	100	20	11	297,000	332	252	83,664	1,943,832
4	116-F-6	100-FR-1	trench	200	300	100	10	1,732,500	529	329	174,041	3,610,121
4	116-F-9	100-FR-1	trench	250	500	15	10	na	726	241	174,966	1,207,250
4	116-H-1	100-HR-1	trench	75	200	25	15	618,750	444	269	119,436	2,981,826
4	116-H-2	100-HR-1	trench	165	275	100	6	1,608,750	492	317	155,964	2,806,070
4	116-K-2	100-KR-1	trench	4000	4000	50	20	12,696,750	4,259	309	1,316,031	38,252,256
4	120-KE-3	100-KR-3	trench	1	40	3	3	157,410	248	211	52,328	974,070
					Category Subtotal			40,715,485			7,429,645	186,882,820
5	120-KE-8	100-KR-2	brine pit	1.6	16	10	10	130,680	245	245	60,025	1,283,332
5	120-KW-6	100-KR-2	brine pit	1.6	16	10	10	130,680	245	245	60,025	1,283,332
5	120-KE-9	100-KR-3	brine pit	3.0	23	17	10	161,400	252	246	61,992	1,361,574
5	120-KW-7	100-KR-3	brine pit	3.0	23	17	10	161,400	252	246	61,992	1,361,574
5	116-B-7	100-BC-1	outfall structure	9.5	27	14	25	162,620	301	288	86,688	2,478,526
5	116-B-8	100-BC-1	outfall structure	9.5	27	14	25	162,620	301	288	86,688	2,478,526
5	132-C-2	100-BC-1	outfall structure		na	na	na	na	301	288	86,688	2,641,146
5	116-D-5	100-DR-1	outfall structure	26	60	24	25	268,620	334	288	96,192	2,900,500
5	116-DR-5	100-DR-1	outfall structure	9.5	27	14	25	162,620	301	288	86,688	2,478,526
5	116-F-8	100-FR-1	outfall structure	9.4	27	14	25	162,620	301	288	86,688	2,478,526
5	116-H-5	100-HR-1	outfall structure	9.5	27	14	25	162,620	301	288	86,688	2,478,526
5	116-B-11	100-BC-1	retention basin, concrete	24,000	450	230	24	4,620,000	721	501	361,221	8,499,759

Table A.4-1. Categorized Waste Site Database.
(sheet 5 of 10)

5	116-C-5	100-BC-1	retention basin, steel	2178 330	660	0	4,765,200	859	529	454,411	8,755,115
5	116-D-7	100-DR-1	retention basin, concrete	2473 467	230	20	4,777,080	726	489	355,014	7,432,511
5	116-DR-9	100-DR-1	retention basin, concrete	3276 600	273	20	6,928,350	859	532	456,988	8,929,267
5	116-F-14	100-FR-1	retention basin, concrete	5484 450	230	24	4,620,000	721	501	361,221	8,603,259
5	116-H-6	100-HR-1	retention basin, concrete	324 162	162	20	1,483,150	421	421	177,241	4,809,487
5	116-H-7	100-HR-1	retention basin, concrete	327 600	273	20	6,928,350	859	532	456,988	9,256,867
5	116-KE-4	100-KR-1	retention basin, steel	1875 250	750	0	1,619,880	949	449	426,101	10,854,680
5	116-KW-3	100-KR-1	retention basin, steel	1875 250	750	0	1,619,880	949	449	426,101	10,854,680
5	118-KE-2	100-KR-2	storage facility	20 40	25	20	222,750	299	215	64,285	2,267,959
5	118-KW-2	100-KR-2	storage facility	20 40	25	20	222,750	299	215	64,285	2,267,959
				Category Subtotal			39,473,270			4,464,210	105,755,631
6	118-F-7	100-FR-2	burial ground 1,0	16	8	8	126,320	239	231	55,209	1,158,907
6	118-H-2	100-HR-2	burial ground 105	140	50	15	627,000	384	294	112,896	2,780,616
6	126-B-2	100-BC-1	demolition/inert 2275	751	135	22	4,890,100	1,016	400	406,400	11,535,925
				Category Subtotal			5,643,420			574,505	15,475,448
Total for all Categories							226,553,265			23,921,760	582,968,897

Notes:
na = information not available
volumes reported in bank cubic feet
contaminated soil extends 33 ft below bottom of disposal unit
areas reported in square feet
lengths and widths reported in feet
thickness measured, in feet ,from ground surface to bottom of disposal unit
116-B-10,4,9, 116D-3,4,6, 116-F-10,11,12,13,7, 116-H-3, 120-KE-1,2, and 120-KW-1,2 are
all computed as squares and not as a conic therefore conservatively over-estimating the volume.

THIS PAGE INTENTIONALLY
LEFT BLANK

Table A.4-1. Categorized Waste Site Database.
(sheet 6 of 10)

Disposal Unit Name	Total Vol Excavated
118-B-5	2,903,181
118-B-7	1,229,631
118-B-2	1,937,236
118-B-3	12,866,519
118-B-4	2,044,306
118-B-6	2,665,211
118-B-1	31,399,665
118-C-1	18,807,936
118-D-5	2,221,071
118-D-1	15,790,131
118-D-2	18,611,719
118-D-3	33,837,691
118-D-4	26,961,206
118-DR-1	3,604,176
118-F-1	28,184,181
118-F-2	14,780,004
118-F-3	3,780,576
118-F-4	1,368,991
118-F-5	10,469,376
118-F-6	11,767,431
118-H-1	24,793,506
118-H-3	9,756,081
118-H-4	2,689,951
118-H-5	1,070,125
118-K-1	57,103,631
	340,643,532
E White Bluffs	3,067,921
White Bluffs	2,729,834
USBR 2,4-D Burial	3,480,701
Barrel Disposal	2,499,246
	11,777,702
Army munitions	1,258,847

Table A.4-1. Categorized Waste Site Database.
(sheet 7 of 10)

JA Jones 2	1,686,331
UN-100-F-1	1,857,901
UN-100-K-1	1,857,901
UN-100-N-13	1,258,847
UN-100-N-14	1,653,049
UN-100-N-17	1,653,049
UN-100-N-20	1,653,049
UN-100-N-24	1,653,049
UN-100-N-25	1,653,049
UN-100-N-26	1,653,049
UN-100-N-31	2,038,071
UN-100-N-4	1,840,357
UN-100-N-5	1,840,357
UN-100-N-8	1,295,031
UN-100-N-9	1,295,031
UN-100-N-1	1,399,177
UN-100-N-10	1,368,991
UN-100-N-12	1,258,847
UN-100-N-2	1,476,147
UN-100-N-29	1,468,880
UN-100-N-3	1,280,497
UN-100-N-30	2,038,071
UN-100-N-32	2,038,071
UN-100-N-35	2,038,071
UN-100-N-7	1,840,357
UN-100-N-15	1,653,049
UN-100-N-18	1,653,049
UN-100-N-19	1,653,049
UN-100-N-21	1,653,049
UN-100-N-22	1,653,049
UN-100-N-23	1,653,049
UN-100-N-33	2,038,071
UN-100-N-34	2,038,071
UN-100-N-6	1,840,357
UN-600-17	2,038,071
UN-100-N-11	1,368,991
Riverland wash pit	1,558,922
	63,154,854

Table A.4-1. Categorized Waste Site Database.
(sheet 8 of 10)

116-B-12	1,368,991
116-B-3	1,368,991
116-B-5	1,988,363
116-B-6A	1,151,631
116-B-6B	1,099,683
116-C-2A	4,844,571
116-D-2	1,368,991
116-D-9	1,368,991
116-DR-4	1,368,991
116-DR-7	1,295,031
116-DR-8	1,368,991
116-F-4	1,368,991
116-F-5	1,368,991
116-H-4	889,385
116-H-9	1,368,991
White Bluffs crib	1,853,801
116-K-1	13,762,021
116-KE-1	3,234,557
116-KE-2	3,168,815
116-KW-1	3,234,557
116-N-1	6,090,188
116-B-10	1,110,760
116-B-4	1,896,287
116-B-9	933,696
116-D-3	1,013,954
116-D-4	1,013,954
116-D-6	922,356
116-F-10	1,266,049
116-F-11	922,356
116-F-12	1,061,697
116-F-13	922,356
116-F-7	1,896,287
116-H-3	1,552,944
120-KE-1	979,279
120-KE-2	922,356
120-KW-1	979,279
120-KW-2	922,356
120-N-3	922,356
120-N-6	922,356

Table A.4-1. Categorized Waste Site Database.
(sheet 9 of 10)

120-N-7	922,356
120-N-8	922,356
116-KE-3	3,701,664
116-KW-2	3,701,664
116-C-2C	1,279,688
116-B-1	2,448,576
116-B-13	2,918,816
116-B-14	2,633,856
116-B-2	1,940,367
116-C-1	9,589,836
116-D-1A	5,054,584
116-D-1B	3,420,991
116-DR-1	1,940,367
116-DR-2	2,459,136
116-DR-3	2,033,771
116-DR-6	1,669,131
116-F-1	27,886,661
116-F-2	5,112,576
116-F-3	2,240,832
116-F-6	5,342,621
116-F-9	5,188,574
116-H-1	3,600,576
116-H-2	4,414,820
116-K-2	50,949,006
120-KE-3	1,131,480
	227,598,305
120-KE-8	1,414,012
120-KW-6	1,414,012
120-KE-9	1,522,974
120-KW-7	1,522,974
116-B-7	2,641,146
116-B-8	2,641,146
132-C-2	2,641,146
116-D-5	2,169,120
116-DR-5	2,641,146
116-F-8	2,641,146
116-H-5	2,641,146
116-B-11	13,119,759

Table A.4-1. Categorized Waste Site Database.
(sheet 10 of 10)

116-C-5	13,520,315
116-D-7	12,209,591
116-DR-9	15,857,617
116-F-14	13,223,259
116-H-6	6,292,637
116-H-7	16,185,217
116-KE-4	12,474,560
116-KW-3	12,474,560
118-KE-2	2,490,709
118-KW-2	2,490,709
	145,228,901
118-F-7	1,285,227
118-H-2	3,407,616
126-B-2	16,426,025
	21,118,868
	809,522,162

Table A.4-2. Total Excavation Volume Calculations. (sheet 1 of 5)

GENERAL USE OPTION								
	A	B	C	D	E	F	G	H
	length	width	thickness	prism center	prism corners	prism sides		
Disposal Unit Name	x	y	z	X'Y'Z'	4/3(1.5^2)(Z'^3)	1.5(X'+Y')(Z'^2)	D+E+F	Round G
118-B-5	50	50	20	1192500	446631	1264050	2903181	2903181
118-B-7	8	8	8	478224	206763	544644	1229631	1229631
118-B-2	60	30	10	894400	238521	804315	1937236	1937236
118-B-3	350	275	20	8943750	446631	3476137.5	12866518.5	12866519
118-B-4	100	10	10	946000	238521	859785	2044306	2044306
118-B-6	40	40	20	1038800	446631	1179780	2665211	2665211
118-B-1	1000	321	20	24544300	446631	6408733.5	31399664.5	31399665
118-C-1	510	400	15	14640000	331776	3836160	18807936	18807936
118-D-5	20	20	20	763200	446631	1011240	2221071	2221071
118-DR-1	125	75	15	1890000	331776	1382400	3604176	3604176
118-D-1	450	375	20	13846250	446631	4318837.5	18611718.5	18611719
118-D-2	1000	360	20	26818000	446631	6573060	33837691	33837691
118-D-3	1000	250	20	20405000	446631	6109575	26961206	26961206
118-D-4	600	200	20	11130000	446631	4213500	15790131	15790131
118-F-1	600	500	20	22260000	446631	5477550	28184181	28184181
118-F-2	368	326	20	10566504	446631	3766869	14780004	14780004
118-F-3	175	50	15	1980000	331776	1468800	3780576	3780576
118-F-4	10	10	10	520300	238521	610170	1368991	1368991
118-F-5	500	150	15	7200000	331776	2937600	10469376	10469376
118-F-6	400	200	20	7950000	446631	3370800	11767431	11767431
118-H-1	700	350	20	19080000	446631	5266875	24793506	24793506
118-H-3	300	200	20	6360000	446631	2949450	9756081	9756081
118-H-4	150	30	10	1397500	238521	1053930	2689951	2689951
118-H-5	30	10	2	500500	128625	441000	1070125	1070125
118-K-1	1200	600	20	48230000	446631	8427000	57103631	57103631
E White Bluffs	100	100	10	1720000	238521	1109400	3067921	3067921
White Bluffs	125	50	10	1451250	238521	1040062.5	2729833.5	2729834
USBR 2,4D Burial	400	12	4	2072000	151959	1256742	3480701	3480701
Barrel Disposal	100	50	10	1290000	238521	970725	2499246	2499246
Army Munitions	3	2	10	451758	238521	568567.5	1258846.5	1258847
JA Jones 2	30	30	10	726700	238521	721110	1686331	1686331
UN-100-F-1	40	40	10	842800	238521	776580	1857901	1857901
UN-100-K-1	40	40	10	842800	238521	776580	1857901	1857901
UN-100-N-13	2	3	10	451758	238521	568567.5	1258846.5	1258847
UN-100-N-14	28	28	10	704512	238521	710016	1653049	1653049

Table A.4-2. Total Excavation Volume Calculations.
(sheet 2 of 5)

UN-100-N-17	28	28	10	704512	238521	710016	1653049	1653049
UN-100-N-20	28	28	10	704512	238521	710016	1653049	1653049
UN-100-N-24	28	28	10	704512	238521	710016	1653049	1653049
UN-100-N-25	28	28	10	704512	238521	710016	1653049	1653049
UN-100-N-26	28	28	10	704512	238521	710016	1653049	1653049
UN-100-N-31	50	50	10	967500	238521	832050	2038071	2038071
UN-100-N-4	39	39	10	830803	238521	771033	1840357	1840357
UN-100-N-5	39	39	10	830803	238521	771033	1840357	1840357
UN-100-N-8	5	5	10	474075	238521	582435	1295031	1295031
UN-100-N-9	5	5	10	474075	238521	582435	1295031	1295031
UN-100-N-1	12	12	10	539392	238521	621264	1399177	1399177
UN-100-N-10	10	10	10	520300	238521	610170	1368991	1368991
UN-100-N-12	2	3	10	451758	238521	568567.5	1258846.5	1258847
UN-100-N-2	17	17	10	588627	238521	648999	1476147	1476147
UN-100-N-29	30	4	10	581360	238521	648999	1468880	1468880
UN-100-N-3	4	4	10	465088	238521	576888	1280497	1280497
UN-100-N-30	50	50	10	967500	238521	832050	2038071	2038071
UN-100-N-32	50	50	10	967500	238521	832050	2038071	2038071
UN-100-N-35	50	50	10	967500	238521	832050	2038071	2038071
UN-100-N-7	39	39	10	830803	238521	771033	1840357	1840357
UN-100-N-15	28	28	10	704512	238521	710016	1653049	1653049
UN-100-N-18	28	28	10	704512	238521	710016	1653049	1653049
UN-100-N-19	28	28	10	704512	238521	710016	1653049	1653049
UN-100-N-21	28	28	10	704512	238521	710016	1653049	1653049
UN-100-N-22	28	28	10	704512	238521	710016	1653049	1653049
UN-100-N-23	28	28	10	704512	238521	710016	1653049	1653049
UN-100-N-33	50	50	10	967500	238521	832050	2038071	2038071
UN-100-N-34	50	50	10	967500	238521	832050	2038071	2038071
UN-100-N-6	39	39	10	830803	238521	771033	1840357	1840357
UN-600-17	50	50	10	967500	238521	832050	2038071	2038071
UN-100-N-11	10	10	10	520300	238521	610170	1368991	1368991
Riverland Wash Pit	40	6	10	638120	238521	682281	1558922	1558922
116-B-12	10	10	10	520300	238521	610170	1368991	1368991
116-B-3	10	10	10	520300	238521	610170	1368991	1368991
116-B-5	84	16	10	917792	238521	832050	1988363	1988363
116-B-6A	12	8	6	471744	177957	501930	1151631	1151631
116-B-6B	4	8	6	438048	177957	483678	1099683	1099683
116-C-2A	140	100	20	2544000	446631	1853940	4844571	4844571
116-D-2	10	10	10	520300	238521	610170	1368991	1368991
116-D-9	10	10	10	520300	238521	610170	1368991	1368991

Table A.4-2. Total Excavation Volume Calculations.
(sheet 3 of 5)

116-DR-4	10	10	10	520300	238521	610170	1368991	1368991
116-DR-7	5	5	10	474075	238521	582435	1295031	1295031
116-DR-8	10	10	10	520300	238521	610170	1368991	1368991
116-F-4	10	10	10	520300	238521	610170	1368991	1368991
116-F-5	10	10	10	520300	238521	610170	1368991	1368991
116-H-4	4	4	2	378560	128625	382200	889385	889385
116-H-9	10	10	10	520300	238521	610170	1368991	1368991
White Bluffs Crib	50	30	10	838500	238521	776580	1853601	1853601
116-K-1	400	400	10	10750000	238521	2773500	13762021	13762021
116-KE-1	40	40	26	1156400	616137	1462020	3234557	3234557
116-KE-2	16	16	32	874640	823875	1470300	3168815	3168815
116-KW-1	40	40	26	1156400	616137	1462020	3234557	3234557
116-N-1	290	125	12	3948750	273375	1868062.5	6090187.5	6090188
116-B-10	3	3	7	424360	192000	494400	1110760	1110760
116-B-4	4	4	20	573248	446631	876408	1896287	1896287
116-B-9	4	4	3	389376	139968	404352	933696	933696
116-D-3	3	3	5	403142	164616	446196	1013954	1013954
116-D-4	3	3	5	403142	164616	446196	1013954	1013954
116-D-6	3	3	3	381924	139968	400464	922356	922356
116-F-10	3	3	10	456187	238521	571341	1266049	1266049
116-F-11	3	3	3	381924	139968	400464	922356	922356
116-F-12	3	3	6	413751	177957	469989	1061697	1061697
116-F-13	3	3	3	381924	139968	400464	922356	922356
116-F-7	4	4	20	573248	446631	876408	1896287	1896287
116-H-3	3	3	15	509232	331776	711936	1552944	1552944
120-KE-1	4	4	4	400192	151959	427128	979279	979279
120-KE-2	3	3	3	381924	139968	400464	922356	922356
120-KW-1	4	4	4	400192	151959	427128	979279	979279
120-KW-2	3	3	3	381924	139968	400464	922356	922356
120-N-3	3	3	3	381924	139968	400464	922356	922356
120-N-6	3	3	3	381924	139968	400464	922356	922356
120-N-7	3	3	3	381924	139968	400464	922356	922356
1200-N-8	3	3	3	381924	139968	400464	922356	922356
116-KE-3	10	10	39	871200	1119744	1710720	3701664	3701664
116-KW-2	10	10	39	871200	1119744	1710720	3701664	3701664
116-C-2C	23	16	6	556452	177957	545278.5	1279687.5	1279688
116-B-13	50	50	15	1080000	331776	1036800	2448576	2448576
116-B-1	100	10	20	1166000	446631	1306185	2918816	2918816
116-B-14	120	10	15	1161600	331776	1140480	2633856	2633856
116-B-2	130	10	6	986700	177957	775710	1940367	1940367

Table A.4-2. Total Excavation Volume Calculations. (sheet 4 of 5)

116-C-1	500	50	25	5220000	585336	3784500	9589836	9589836
116-DR-1	300	15	20	2438000	446631	2169952.5	5054583.5	5054584
116-DR-2	150	10	20	1457500	446631	1516860	3420991	3420991
116-D-1A	130	10	6	986700	177957	775710	1940367	1940367
116-D-1B	100	10	15	1056000	331776	1071360	2459136	2459136
116-DR-3	60	40	10	963200	238521	832050	2033771	2033771
116-DR-6	50	10	10	709500	238521	721110	1669131	1669131
116-F-1	3000	40	10	18662000	238521	8986140	27886661	27886661
116-F-2	300	50	15	2880000	331776	1900800	5112576	5112576
116-F-3	100	20	11	1056000	255552	929280	2240832	2240832
116-F-6	300	100	10	3440000	238521	1664100	5342621	5342621
116-F-9	500	15	10	2967000	238521	1983052.5	5188573.5	5188574
116-H-1	200	25	15	1800000	331776	1468800	3600576	3600576
116-H-2	275	100	6	2925000	177957	1311862.5	4414819.5	4414820
116-K-2	4000	50	20	32595000	446631	17907375	50949006	50949006
120-KE-3	40	3	3	519120	139968	472392	1131480	1131480
120-KE-8	16	10	10	548680	238521	626811	1414012	1414012
120-KW-6	16	10	10	548680	238521	626811	1414012	1414012
120-KE-9	23	17	10	618813	238521	665640	1522974	1522974
120-KW-7	23	17	10	618813	238521	665640	1522974	1522974
116-B-11	450	230	24	10345500	555579	4288680	13119759	13119759
116-C-5	330	660	0	10784400	107811	1943865	13520314.88	13520315
116-DR-9	600	273	20	13838300	446631	4521085.5	15857616.5	15857617
116-D-7	467	230	20	9916830	446631	3779509.5	12209590.5	12209591
116-F-14	450	230	24	10345500	555579	4288680	13223259	13223259
116-H-6	162	162	20	3638132	446631	2207874	6292637	6292637
116-H-7	600	273	20	13838300	446631	4521085.5	16185216.5	16185217
116-KE-4	250	750	0	9817500	107811	1960200	12474559.62	12474560
116-KW-3	250	750	0	9817500	107811	1960200	12474559.62	12474560
118-KE-2	40	25	20	927500	446631	1116577.5	2490708.5	2490709
118-KW-2	40	25	20	927500	446631	1116577.5	2490708.5	2490709
126-B-2	751	135	22	10999175	499125	4927725	16426025	16426025
118-F-7	16	8	8	513648	206763	564816	1285227	1285227
118-H-2	140	50	15	1728000	331776	1347840	3407616	3407616
116-B-7	27	14	25	839724	585336	1216086	2641146	2641146
116-B-8	27	14	25	839724	585336	1216086	2641146	2641146
132-C-2	n/a	n/a	n/a	839724	585336	1216086	2641146	2641146
116-DR-5	27	14	25	839724	585336	1216086	2641146	2641146
116-D-5	60	24	25	1150720	585336	1433064	3169120	3169120
116-F-8	27	14	25	839724	585336	1216086	2641146	2641146

9513354.0091

Table A.4-2. Total Excavation Volume Calculations. (sheet 5 of 5)

116-H-5	27	14	25	839724	585336	1216086	2641146	2641146
							TOTAL	809522162
note:								
X' = x + 100								
Y' = y + 100								
Z' = z + 33								

5. Combustibles comprise 40% of the burial ground wastes. Of the noncombustible burial ground wastes, 60% is buried metals, and 40% is buried demolition wastes.

6. For both the General Use and Industrial Use Option, it is assumed that all wastes and structures will be removed from the site. No wastes, even clean demolition waste, will be left onsite.

7. Volumes of demolition wastes, buried wastes, and discrete metals are estimated to be 35,601,000 Bft^3 each (10% of total volume, see assumption 4).

   Therefore, the total amount of soil to be excavated (overburden, side slopes, and contaminated soil) is estimated to be 702,719,000 Bft^3.

   702,719,000 total soil, Bft^3
   249,209,000 contaminated soil, Bft^3
   453,510,000 overburden and side slopes, Bft^3

8. Assumed swell factors are as follows:

   - 60% for demolition wastes (predominantly concrete). Based on swell factor for limestone
   - 14% for soil. Based on swell factor for wet gravel
   - 30% for discrete metals and buried wastes. (Bauer 1991, p. 11, assumes a 30% swell factor for all materials)

   Using these swell factors, the estimated loose volumes (cubic feet) for the General Use Option are:

   - 56,962,000 demolition wastes
   - 801,100,000 soil (contaminated, overburden, side slopes)
     284,098,000 contaminated
     517,001,000 overburden
   - 46,281,000 discrete metals
   - 46,281,000 buried wastes.

9. Approximately two-thirds of overburden and side-slope material soil can be stockpiled for future use as backfill. Volume is therefore estimated to be 2/3 x 517,001,000 = 344,667,000 loose ft^3.

   Therefore, one-third of the overburden and side-slope soil will be transported to the 200 Areas for disposal. Volume estimated to be 1/3 x 517,001,000 = 172,334,000 loose ft^3 for the General Use Option.

10. Five percent of the contaminated soil beneath the disposal units is high activity; i.e., greater than 200 mrad/h or greater than 100 nCi/g alpha (study assumption for all aggregate areas).

High activity: (5%)(249,209,000 Bft^3)(1.14 swell)
= 14,205,000 loose ft^3
= 0.5 M loose yd^3
Low activity: (95%)(249,209,000 ft^3)(1.14 swell)
= 269,893,000 loose ft^3
= 1.0 M loose yd^3

11. Five percent of the Hanford soil is composed of boulders greater than 12 in. in diameter (Adams 1992, p. A-1). The boulder fraction is separated out of the soil from the low-activity contaminated soil and from the overburden to be transported. The boulder fraction is not separated out of the high-activity soil.

    - Transported soil, greater than 12 in. (General Use Option)
      (5%)(172,334,000) + (5%)(269,893,000) = 22,112,000 loose ft^3

    - Transported soil, less than 12 in. (General Use Option)
      (95%)(172,334,000) + (95%)(269,893,000) = 420,116,000 loose ft^3

12. One percent of the demolition wastes is assumed to be high-activity wastes.

    High activity: (1%)(56,962,000 loose ft^3)
    = 570,000 loose ft^3
    = 0.02 M loose yd^3

    Low activity: (99%)(56,962,000 loose ft^3)
    = 56,392,000 loose ft^3
    = 2.1 M loose yd^3

13. One percent of the discrete metals (i.e., retention basin steel tanks and metal piping) is assumed to high-activity waste.

    High activity: (1%)(46,281,000 loose ft^3)
    = 463,000 loose ft^3
    = 0.02 M loose yd^3
    Low activity: (99%)(46,281,000 loose ft^3)
    = 45,818,000 loose ft^3
    = 1.7 M loose yd^3

14. Fifteen percent of the discrete metals is assumed to be from retention basin steel tanks and 85% is assumed to be from metal piping. Ratio of high-activity versus low activity is the same for piping as for tanks (i.e., 1% high activity).

    High activity, from retention basin steel tanks: (15%)(463,000)
    = 69,000 loose ft^3
    = less than 0.01 M loose yd^3

    Low activity, from retention basin steel tanks: (15%)(45,818,000)
    = 6,873,000 loose ft^3
    = 0.3 M loose yd^3

High activity, from metal piping: (85%)(463,000)
= 394,000 loose ft^3
= 0.01 M loose yd^3

Low activity, from metal piping: (85%)(45,818,000)
= 38,945,000 loose ft^3
= 1.4 M loose yd^3

15. Eighty-two percent of the low-activity metal piping is greater than 24 in. in diameter. This piping will be packaged for transport via racks.

Low activity, metal piping on racks; i.e., greater than 24-in. diameter:
= (82%)(38,945,000)
= 31,935,000 loose ft^3
= 1.2 M loose yd^3

Low activity, metal piping in boxes; i.e., less than 24-in. diameter:
= (18%)(38,945,000)
= 7,010,000 loose ft^3
= 0.3 M loose yd^3

16. Fifteen percent of the buried wastes is assumed to be high-activity waste.

High activity: (15%)(46,281,000 loose ft^3)
= 6,942,000 loose ft^3
= 0.3 M loose yd^3
Low activity: (85%)(46,281,000 loose ft^3)
= 39,339,000 loose ft^3
= 1.5 M loose yd^3

17. Assume topsoil will be placed to a depth of 6 in. over all of the recontoured excavations. Volume of topsoil is calculated to be the total crest surface area of the sites multiplied by the depth of 6 in. Total surface area as calculated in Table A.4-1 is 23,921,760 ft^2. Therefore, topsoil = 11,960,880 ft^3.

A.4.1.2 Industrial Use Option

1. The following are assumptions for the Industrial Use Option.

   - Volume of contaminated soil to be excavated beneath disposal units is decreased, with a proportional decrease in the volume of uncontaminated side-slope soil and overburden to be excavated

   - Volume of buried wastes, demolition wastes, and discrete metals remains the same

   - Volumes of high-activity wastes remain the same.

2. A comparison was made of the magnitude of the study cleanup standards for the two land use options to determine the volumetric impact of a change in land use (General Use versus Industrial Use).

   The first step was to select indicator contaminants based on a general knowledge of operations at the 100 Aggregate Area, as confirmed by information source documents; i.e., the operable unit RI/FS work plans (Dorian and Richards 1978).

   Once the indicator contaminants were selected, the list was further refined for consistency with the information presented in Section 5.1, "100 Areas Objectives," and Section 6.2, "Soil Contamination." Ratios of the cleanup standards were determined for those key indicator contaminants. Note, per the methodology for dealing with additive toxic effects, that one-fourth of the cleanup standards were used. See Chapter 5.0 for explanation.

Indicator contaminant	1/4 General use cleanup standard	1/4 Industrial use cleanup standard	Ratio
H-3	8,750	2,500,000	286
C-14	217.5	7,500,000	34,500
Co-60*	0.25	1,250	5,000
Ni-63*	975	25,000	26
Sr-90*	3.25	150	46
Cs-137*	0.75	5,000	6,667
Pu-239	18.8	18.8	1
Cr(VI)*	20	125	6

*Key indicator contaminant.

The following conclusions can be drawn from the ratios, coupled with assumptions on the frequency of occurrence:

- Cr(VI) is a significant driver to the need for soil excavation in the Industrial Use Option at liquid waste disposal sites

- Strontium-90, nickel-63, and cobalt-60 (listed in order of priority) are significant drivers to the need for soil excavation in the Industrial Use Option at both liquid waste disposal sites and at the burial grounds.

3. It is assumed that the soil beneath the burial grounds meets the Industrial Use cleanup standards. This assumption is based on the conclusions in Dorian and Richards (1978, p. 4-28), that there probably has not been any measurable migration of radionuclides in the soil column

underneath the burial trenches. Therefore, excavating at the burial grounds will be performed only for the purpose of removal of the buried wastes.

4. A linear concentration gradient with depth is assumed beneath the liquid waste disposal units. The gradient is such that the General Use cleanup standard is met at a depth of 33 ft below the bottom of the disposal unit. A linear approximation of the gradient is assumed to be adequately conservative because of the tendency for contaminants to sorb on the fine fraction of soils (Adams 1992) immediately below the disposal unit (see Section 6.2).

   Assuming a linear concentration gradient, and using the most conservative cleanup standard ratio of 6 for Cr(VI) (the plutonium ratio is neglected because plutonium is not mobile in the soil), it can be concluded that only one-sixth of the contaminated soil under the General Use Option would require excavation under the Industrial Use Option. However, a more conservative one-third is recommended to account for assumption uncertainties. This means that the bulk of contamination would be expected in the 11 ft (one-third times 33) of soil column beneath a liquid waste site, a reasonable assumption in view of the Dorian and Richards (1978) data.

5. Based on the above assumptions, the total volume of material to be excavated under the Industrial Use Option, V_i is calculated by:

$$V_i = (33\%)S_l + (0\%)S_b + B + D + M + (33\%)S_o$$

where

S_l = Contaminated soil beneath liquid waste disposal units
= 96,811,000 Bft^3
category 3: 8,603,771 Bft^3
category 4: 44,787,034 Bft^3
category 5: 43,420,597 Bft^3
= 110,365,000 loose ft^3
$33\%S_l$ = 36,420,000 loose ft^3

S_b = Contaminated soil beneath burial grounds

B = Buried waste
= 46,281,000 loose ft^3

D = Demolition waste
= 56,962,000 loose ft^3

M = Discrete metals
= 46,281,000 loose ft^3

S_o = Overburden and side slope material, total
= 453,100,000 Bft^3
809,522,000 Bft^3 total excavated
-35,601,000 Bft^3 demolition wastes
-35,601,000 Bft^3 discrete metals

-35,601,000 Bft^3 buried wastes
-249,209,000 Bft^3 contaminated soil
= 517,001,000 loose ft^3

$33\%S_o$ = 170,610,000 loose ft^3
67% stockpiled as backfill = 114,309,000
33% transported to 200 Area = 56,301,000

V_i = 356,554,000 loose ft^3
= 13.2 M loose yd^3

6. Volume of high-activity soil is assumed to be the same under the Industrial Use Option as under General Use Option; i.e., all high-activity soil occurs in the first 11 ft below the bottom of the disposal unit.

   - Volume of high-activity soil = 14,205,000 loose ft^3
     = 0.5 M loose yd^3

   - Remaining volume of low-activity soil = 22,215,000 loose ft^3
     = 0.8 M loose yd^3

7. Volume of boulders to be transported (Industrial Use Option)
   = (5%)[(22,215,000 low-activity contaminated soil) + (56,301,000 overburden to be transported)]
   = 3,926,000 loose ft^3
   = 0.1 M loose yd^3

A.4.1.3 Summary

Total volume transported to the 200 Areas (loose ft^3).

- General Use:
  284,098,000 contaminated soil
  172,334,000 overburden and side slope material
  56,962,000 demolition wastes
  46,281,000 discrete metals
  46,281,000 buried wastes
  605,957,000 total
  = 22 M loose yd^3

Results are summarized graphically in Figure A.4-1

- Industrial Use:
  36,420,000 contaminated soil
  56,301,000 overburden and side slope material to be transported
  56,962,000 demolition wastes
  46,281,000 discrete metals
  46,281,000 buried wastes
  242,245,000 total
  = 9.0 M loose yd^3

Results are summarized graphically in Figure A.4-2

Figure A.4-1. Waste Volume Distribution, General Use Option.

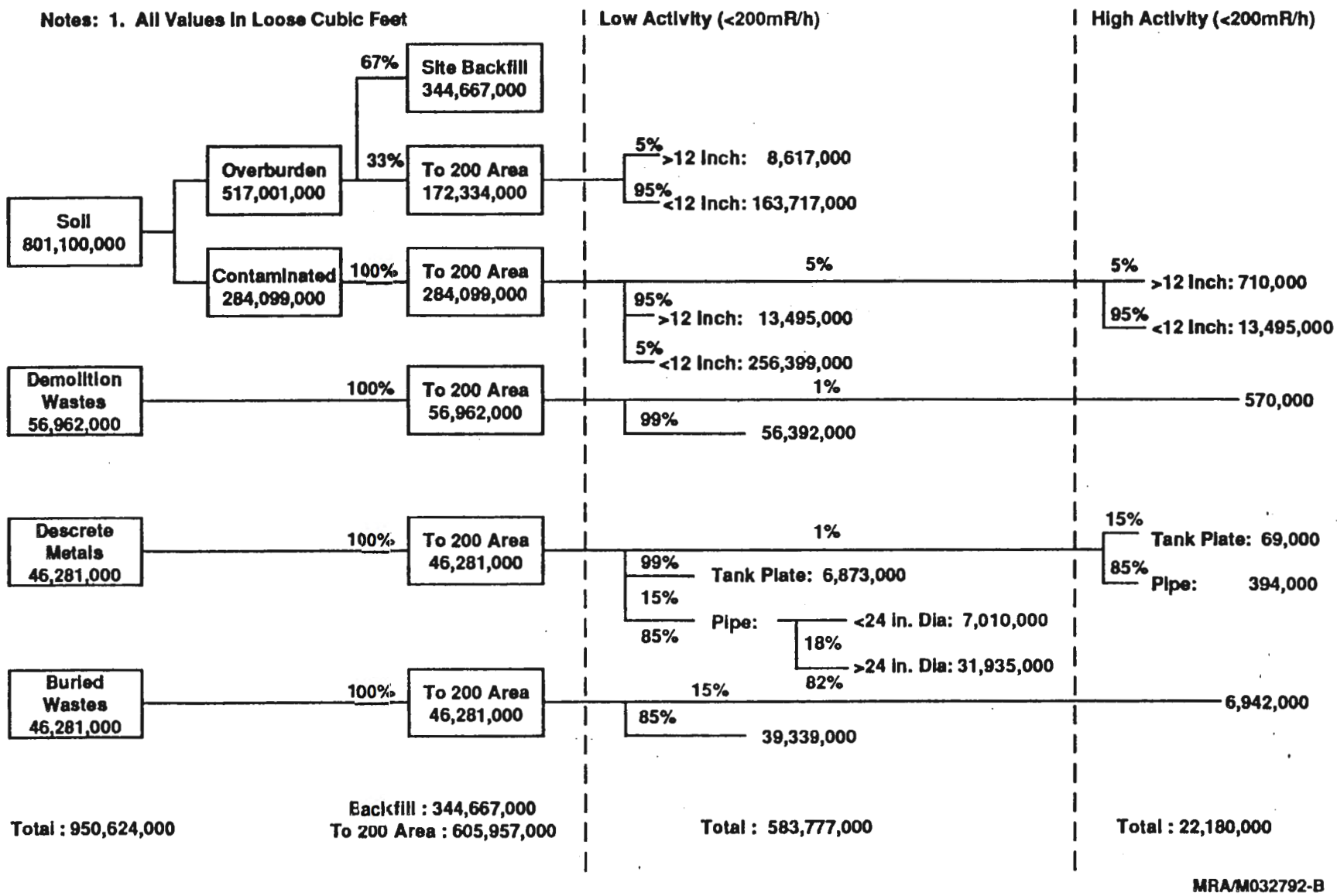

9513354.0095

Figure A.4-2. Waste Volume Distribution, Industrial Use Option.

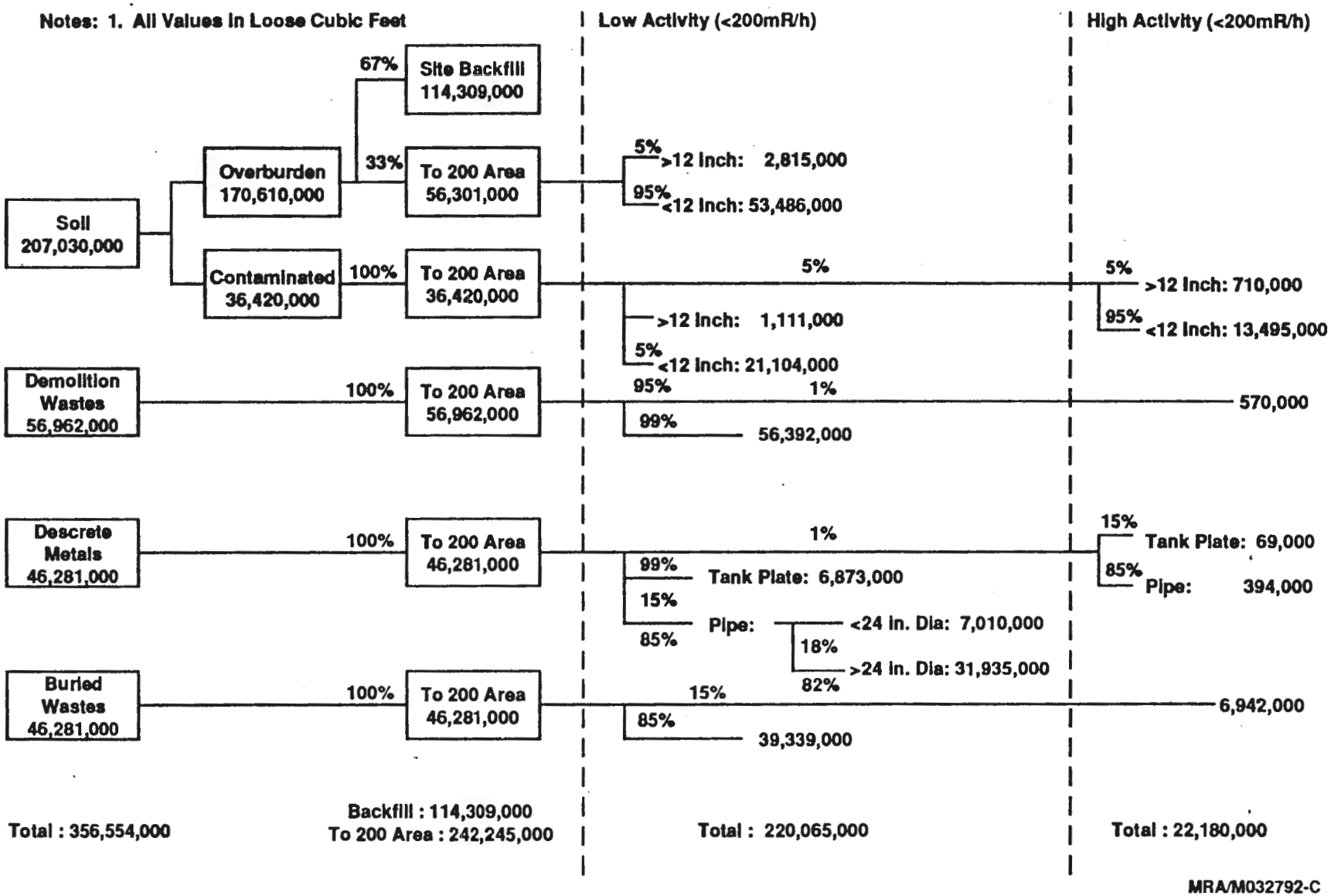

A.5.0 REFERENCES

Adams, M. R., 1992, *A Macroengineering Approach to Hanford Cleanup With Land Use and Technology Development Implications*, WHC-SD-EN-AP-037, Rev. 0, Westinghouse Hanford Company, Richland, Washington.

Bauer, R. G., 1991, *Containment Alternatives for Contaminated Soil Excavation*, WHC-SD-EN-ES-011, Rev. 0, Westinghouse Hanford Company, Richland, Washington.

DOE-RL, 1990, *RCRA Facility Investigation/Corrective Measures Study Work Plan for the 100-NR-1 Operable Unit, Hanford Site, Richland, Washington*, DOE/RL-90-22, Draft A, U.S. Department of Energy, Richland Field Office, Richland, Washington.

DOE-RL, 1991, *Hanford Site Waste Management Units Report*, DOE/RL-88-30, Revision 1, Volume 1, U.S. Department of Energy, Richland Field Office, Richland, Washington.

Dorian, J. J., and V. R. Richards, 1978, *Radiological Characterization of the Retired 100 Areas*, UNI-946, United Nuclear Industries, Inc., Richland, Washington.

Field, J. G., and G. C. Henkel, 1990, *Physical Treatment of Hanford Waste Sites Engineering Study*, Draft, WHC-SD-EN-ES-006, Revision 0, Westinghouse Hanford Company, Richland, Washington.

Stenner, R. D., K. H. Cramer, K. A. Higley, S. J. Jette, D. A. Lamar, T. J. McLaughlin, D. R. Sherwood, and N. C. Van Houten, 1988, *Hazard Ranking System Evaluation of CERCLA Inactive Waste Sites at Hanford*, PNL-6456, 3 Vols., Pacific Northwest Laboratory, Richland, Washington.

APPENDIX B

ENGINEERED SYSTEM

CONTENTS

B.1.0 VENDOR INFORMATION ON PETREX SOIL VAPOR DETECTION METHOD B-1

B.2.0 RECOMMENDED CONTAINMENT STRUCTURE SIZES AND NUMBER OF ADVANCEMENTS REQUIRED B-11

B.3.0 EXCAVATION EQUIPMENT PERFORMANCE DATA B-14

B.4.0 DEMOLITION EQUIPMENT SPECIFICATIONS B-17
- B.4.1 MATERIAL DENSIFIER B-17
- B.4.2 UNIVERSAL PROCESSOR B-17
- B.4.3 HYDRAULIC HAMMER B-18
- B.4.4 BASE EXCAVATOR B-19

B.5.0 RAIL TRANSPORT CALCULATIONS B-20
- B.5.1 CALCULATION FOR FREIGHT TRAIN REQUIREMENTS AND FLATCARS REQUIRED B-20
- B.5.2 CALCULATION OF LOCOMOTIVE REQUIREMENTS B-23
- B.5.3 DESCRIPTION OF THE SYSTEM OPERATION B-23

B.6.0 CONTAINER CALCULATIONS B-28
- B.6.1 CONTAINERS FOR GENERAL USE OPTION B-28
- B.6.2 CONTAINERS FOR TEN TIMES VOLUME B-29
- B.6.3 CONTAINERS FOR TEN TIMES DECREASE IN VOLUME B-31
- B.6.4 CONTAINERS FOR TEN-YEAR OPERATING TIME B-32

B.7.0 VENDOR BIBLIOGRAPHY B-33
- B.7.1 VOC ANALYSES INSTRUMENTATION B-33
- B.7.2 GEOPHYSICAL INSTRUMENTATION B-33
- B.7.3 RADIATION INSTRUMENTATION B-34
- B.7.4 PLASTIC COVERING B-35
- B.7.5 LEAD WINDOW SUPPLIERS B-35
- B.7.6 BOOK REFERENCES B-36

B.8.0 REFERENCES B-37

FIGURES:

B.5-1 Effect of Number of Cars on Number of Trains B-26

B.5-2 Operation of the Transportation System B-27

B.1.0 VENDOR INFORMATION ON PETREX SOIL VAPOR DETECTION METHOD

OVERVIEW OF THE PETREX TECHNIQUE

The Petrex soil gas technique provides a "core" technology for a number of environmental problem solving applications regarding determinations for volatile and semi-volatile organic compounds (VOC's).

Many of these environmental programs are best served by utilizing the Petrex technique as a "core" technique which is rapid, cost effective, yet highly definitive and based on sound scientific analysis.

The Petrex technique has been proven in, but not limited to, the following applications:

Detection of Organic Volatiles
Identification of Contaminants
Establishing Plume Pathfinders
Determining Pollution Source(s)
Delineation of Plume Boundaries
Mapping Plume Migration
Risk Assessment Strategies
LUST Site Evaluation
Landfill Reconnaissance

The Petrex technique is a patented direct method for trapping and identifying VOC's emanating from either soil (vadose zone) or ground water contaminated locations.

Time Integrative Collection Technique

The Petrex collector consists of highly sensitive sorbents (such as activated charcoal) chemically fused to the tip of a Curie-point ferromagnetic wire. The collectors are arrayed, generally in a grid pattern, throughout the survey site, normally at a depth of approximately one foot. Vertical profiles may also be established.

The collectors reside for an optimally measured period to assure time integrative gas collection as opposed to instantaneous collection as with "grab" samples, or soil gas pumping with a probe collector.

Analysis

The Petrex collectors are retrieved following the time integrative collection period, and are then returned to a Petrex laboratory for analysis by Curie-point desorption mass spectrometry. The wire is placed directly into the high vacuum region of the mass spectrometer where the thermally desorbed VOC's are ionized, separated according to ion mass, and counted.

Compound Identification

Compound Identification is accomplished by comparing mass spectra from the survey collection data set to an extensive reference library of mass spectra of pure compounds and common compound mixtures.

COMPOUNDS DETECTABLE BY PETREX SAMPLERS

NOTE:

The following list of compounds have been trapped in soil gas by the PETREX collector and detected by mass spectrometry. Verification has been conducted using duplicate PETREX collectors with GC/MS and other analytical instruments.

Most volatile compounds are detectable from ground water sources. Semi volatiles and the most soluble of volatiles may be detectable only from very shallow ground water or vadose zone sources. This list should not be applied to specific sites and situations without the advise of Northeast Research Institute personnel. It should be used as a guide to developing environmental strategies.

HYDROCARBONS

Aromatics (Benzene-based)

All aromatic hydrocarbons from C_6 (Benzene) to C_{12} (C_6 Alkyl Benzene), including specifically identified:

Benzene	Ethyl benzene
Toluene	Trimethyl Benzenes
Xylenes	Propyl Benzenes
Ethyl Methyl Benzene	

Alkanes (Aliphatics/Paraffins)

All alkane hydrocarbons from C_4 (Butane) to C_{15} (Pentadecanes), plus C_2 (Ethane), including alkanes with various alkyl groups attached. All cycloalkanes with various alkyl groups attached, including specifically:

Ethane	Cyclo octanes
Butanes	Cyclononanes
Pentanes	Cyclodecanes
Hexanes	Octyl cyclopropane
Heptanes	Methyl cyclopentane
Octanes	Methyl propyl cyclopentane
Nonanes	Methyl hexane
Decanes	Trimethyl hexane
Undecanes	Methyl cyclohexane
Dodecanes	Trimethyl cyclohexane
Tridecanes	Ethyl methyl cyclohexane
Octadecanes	Ethyl-methyl ethyl cyclohexane
Cyclopropane	Methyl octa decane
Cyclobutanes	Dimethyl heptane
Cyclopentanes	Dimethyl octane
Cyclohexanes	Ethyl methyl octane
Cycloheptanes	Dimethyl undecane

VOLATILE HALOGENATED COMPOUNDS

* Vinyl Chloride
Chloromethane
* Methylene Chloride
Chloroform
Carbon Tetrachloride
Chloroethane
Dichloroethanes
Trichloroethanes
Tetrachloroethanes
Dichloropropanes
Dichloroethenes
Trichloroethene
Tetrachloroethene
Dichloropropene
Trichloropropene
Chlorobenzene
Chlorotoluene
Dichlorodifluoromethane
Trichlorofluoromethane
Trichlorotrifluoromethane
Bromoform
Dibromoethane
Bromodichloromethane
Dibromochloromethane
Bromodichloropropane

Semi Volatile Organics

Hexachloroethane
Hexachlorocyclohexane
Hexachlorobutadiene
Hexachloropentadiene
Dichlorobenzenes
Trichlorobenzene
Tetrachlorobenzene
Hexachlorobenzene
Dibromochloropropane
Phenol
Methyl Phenol
C_2-C_3 Phenols
Naphthalene
Methyl Naphthalenes
C_2-C_4 Naphthalenes
Chlorophenols
Chloronaphthalenes
Chlorobenzotrifluoride
Dichlorobenzotrifluoride
Trichlorobenzotrifluoride
Nitrobenzene
Nitrotoluene
Dinitrotoluene
Anthracene
Phenanthrene
Acenaphthalene

Sulfur Compounds

Hydrogen Sulfide
Sulfur Dioxide
Carbon Disulfide
Carbonyl Sulfide

OTHER DETECTABLE COMPOUNDS

Ethanol
Methoxyethanol
Propanol
Butanol
Dimethyl Butanol
Hexanol
Nonanol
MEK
Butanone
Methyl Butanone
Hexanone
Methyl Hexanone
Tridecanone
Aldehyde
Benzaldehyde
Acetaldehyde

Alkenes (Olefins)

All alkenes from C_3 (propylene) to C_{15} (pentadecane), including alkenes with various alkyl and other hydrocarbon groups attached. Also, C_4-C_{15} cycloalkenes, including those with various alkyl groups and other hydrocarbons attached, including specifically:

Ethylene	Cycl butene	Methyl pentene
Propylene	Cyclopentene	Methyl cyclohexene
Butenes	Cyclohexene	
Pentenes	Cycloheptene	
Hexenes	Cyclo octene	
Heptenes	Cyclo nonene	
Octenes	Cyclodecene	
Nonenes		
Decenes		

Dienes

Dienes from C_6-C_{16}

Alkynes

Alkynes from C_6-C_{16}

Styrenes

Styrenes, including:

Styrene
Methyl styrene
C_2-C_6 styrenes

Mixtures

PETREX has detected and can characterize fresh and aged hydrocarbon mixtures, including:

Gasolines (leaded/unleaded)	Lubricants (light oils to greases)
Diesel fuels	Cutting oils
Jet fuels (JP4/JP5)	Coolants
Aviation gasoline	Seal oils
White gasoline	Creosotes
Hydraulic Fluids	

REPRESENTATIVE PETREX SURVEYS

FACILITY TYPE	LOCATION	CONTAMINANTS**	DEPTH TO GROUNDWATER	LOWEST LEVEL OF GROUNDWATER CONTAMINATION KNOWN ON SITE
Aerospace Mfg.*	Colorado	DCE,DCM,PCE, TCA,TCE	20-40'	Low ppb
Aerospace Mfg.	California	PCE,TCE	20-50'	ppb
Aerospace Mfg.*	Florida	BTX,DCE,DCM, TCA,TCE	5-10'	ppb
Air Conditioning Mfg.	Arkansas	TCE,BTX	5'	ppb-ppm
Air Force Base	Hawaii	Petroleum organics	50'	ppb-ppm
Aerospace Mfg.	Louisiana	BTX,PCE,TCE	15'	ppb
Chemical Mfg.* Sales	Colorado	PCE,Petrol. organics	20-30'	ppb-%
Chemical Mfg.	New Jersey	Ethyl Acetate/ Petrol. organ, PCE	Surface-40'	ppb
Chemical Plant	Mississippi	Petroleum organics	10'	ppb
Chemical Plant	Pennsylvania	Chlorinated and other solvents	40'	ppb-ppm
Coast Guard Station	Michigan	Petroleum organics	15'	ppb
Computer, Office Equipment Mfg.	Several	Alkylaromatic hydrocarbons, DCE,PCE, Phenol, TCE	Various	ppb-ppm
Cosmetics Plant	New Jersey	Petroleum organics	25'	ppb-ppm
Deep Well Inject. Site	New Mexico	PCE, Petroleum organ.,TCA,TCE	200'+	ppm (volcanics)
Electric Utility	New England	Gasoline	20'	ppb-ppm
Electric Utility	New England	Coal Tars	15'	ppb-ppm

FACILITY TYPE	LOCATION	CONTAMINANTS**	DEPTH TO GROUNDWATER	LOWEST LEVEL OF GROUNDWATER CONTAMINATION KNOWN ON SITE
Electronics/Inst.* Mfg.	Utah	PCE,TCE	50'	ppb
Electronic Mfg.*	Arizona	PCE,TCE	100-200'	Low ppb
Electronics Mfg.	Japan	PCE,TCE	40'	ppb
Equipment Mfg.*	Connecticut	PCE,TCE	3-5'	Unknown
Fertilizer Plant Waste Site	Nebraska	Petroleum organics, TCE	40'	Low ppb
Fire Training Facility	New York	Petroleum organics	40'	ppb-ppm
Foundry	Indiana	Chlorine solvents	30'	ppb
Fuel Spill	New York	Petroleum organics	40'	ppb-ppm
Fuel Terminals*	California, New Jersey, Texas, Wisconsin	Petroleum organics	10-50'	ppb-ppm
Gasoline* Stations	California, Colorado, Florida, New Jersey, New York	Gasoline, Diesel	10-40'	ppm
Gen. Indust. Area* Reconnaissance	Colorado	DCE,PCE,TCA, TCE	20-60'	ppb
Gen. Indust. Area	Colorado	TCE	20-30'	ppb
General* Industrial Area	Germany	PCE, Petroleum organics,TCE, Phenols	20-70'	ppb-ppm
General Industrial Area	Oklahoma	BTX, Chlorin. solvents	15-20'	Unknown
Instrument Mfg.	Connecticut	Petroleum organics, Chlorinated solvents	20'	ppb

FACILITY TYPE	LOCATION	CONTAMINANTS**	DEPTH TO GROUNDWATER	LOWEST LEVEL OF GROUNDWATER CONTAMINATION KNOWN ON SITE
Instrument Mfg.	Ohio	Chlorinated solvents	20'	ppb
Interior Design Materials Mfg.	New Hampshire	Petroleum organics, Chlorinated solvents	30'	ppb
Landfill	Michigan	DCA,DCE,PCE, TCA,TCE	30'	ppb
Landfill	Washington	Petroleum organics,TCE	200'	Low ppb
Landfill*	Wisconsin	Alkane Hydrocarbons, BTX,PCE,TCE	30'	Low ppb
Lime Mfg. Plant	Ohio	Gasoline	45'	Low ppb
Machine Tool Mfg.	Mass.	PCE,TCE	40'	ppb-ppm
Military*	Colorado	PCE,Pesticide reagents, Petroleum organics,TCE	50-80'	Low ppb
Military*	Minnesota	BTX,DCE,PCE, TCA,TCE	15-20'	Low ppb
Military Equip. Mfg.	Michigan	Petroleum organics	15'	ppb
Motor Vehicle Body Plant	Kentucky	Petroleum organics, Industrial solvents	100'	Unknown
Motion Picture Industries	California	Petroleum organics, Industrial solvents	20-30'	ppb-ppm
Nuclear Facility	Colorado	TCE	80-100'	ppb
Nuclear Facility	Missouri	PCE,Petroleum organics,TCE	40'	ppb
Nuclear Facility*	S. Carolina	PCE,Petroleum organics,TCA, TCE	10-20'	ppb-ppm

FACILITY TYPE	LOCATION	CONTAMINANTS**	DEPTH TO GROUNDWATER	LOWEST LEVEL OF GROUNDWATER CONTAMINATION KNOWN ON SITE
Paint/Coatings Mfg.	California	Petroleum organics	30-50'	ppb
Paint/Coatings Mfg.	Wisconsin	Petroleum organics, Solvents	20-30'	ppb-ppm
Pesticide Application	California	Petroleum organics	10-40'	ppb-ppm
Petroleum Refinery	Oklahoma	Chloroform, Petroleum organics	Surface	ppm
Railroad Car Derailment	Wyoming	Phenol	Surface	ppm-%
Railroad Station	Washington	Petroleum organics	10-30'	ppb-ppm
Railroad Tie Mfg.	Wyoming	Phenols	Surface	ppm+
Refinery	Louisiana	Petroleum organics	10-20'	ppb
Tire Fire Site	Virginia	Aromatic/ napthenic pyrolitic oils from tire fire	Surface	Free Product

****

* Multiple Surveys (Same Area)

** Contaminants:

BTX = Benzene, Toluene, Xylene
DCA = Dichloroethane
DCE = Dichloroethylene
DCM = Dichloromethane
PCE = Perchloroethylene
TCA = Trichloroethane
TCE = Trichloroethylene

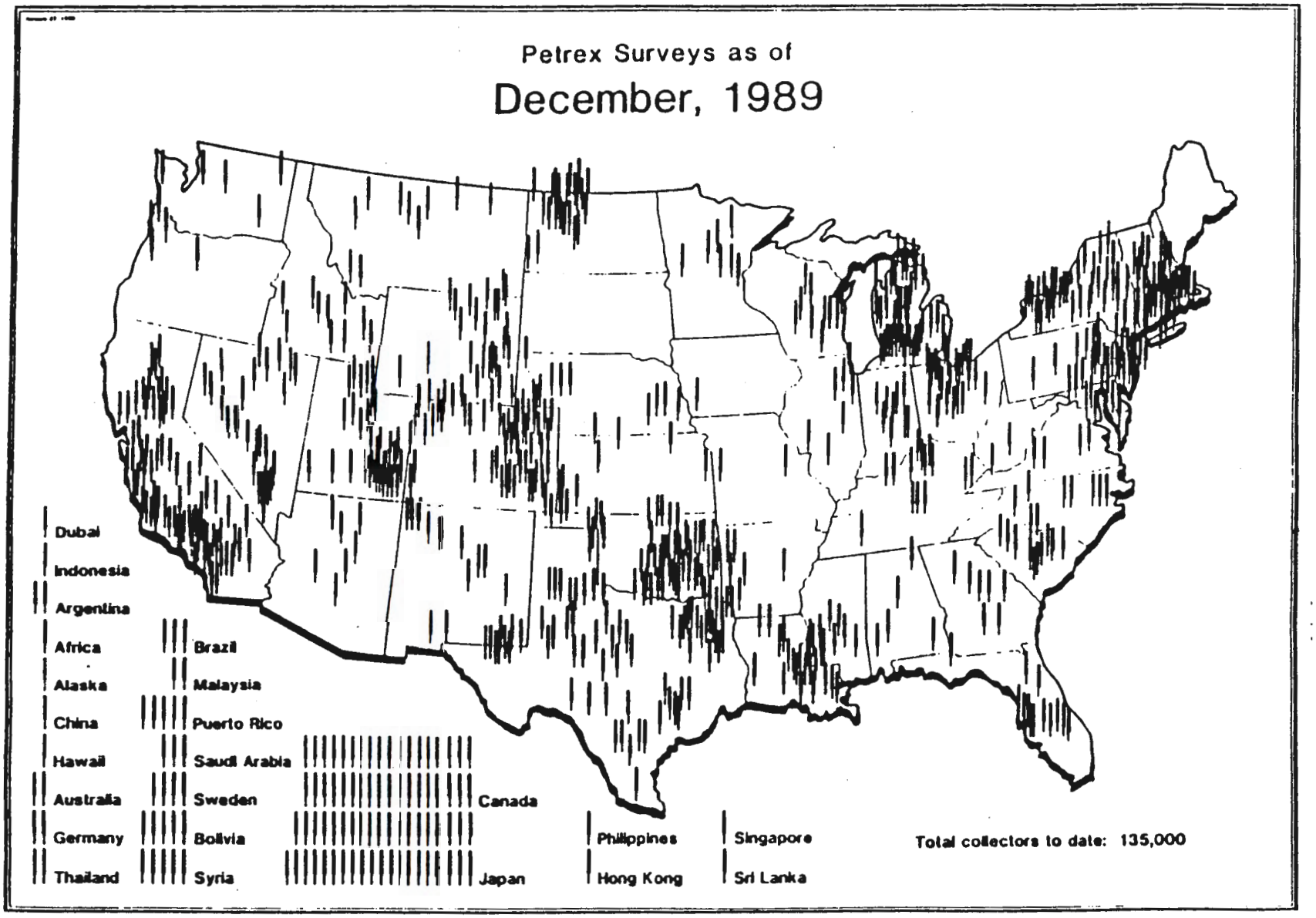
Petrex Surveys as of
December, 1989
Dubai
Indonesia
Argentina
Africa
Alaska
China
Hawaii
Australia
Germany
Thailand
Brazil
Malaysia
Puerto Rico
Saudi Arabia
Sweden
Bolivia
Syria
Canada
Japan
Philippines
Hong Kong
Singapore
Sri Lanka
Total collectors to date: 135,000

PETREX ENVIRONMENTAL SERVICES

Price List - Effective July 1, 1990

Analytical Services

Petrex Soil Gas TD-MS (Double Wires)	$ 95.00/Sampler*
Petrex Soil Gas TD-GC/MS (Double Wires)	$170.00/Analysis
Petrex Headspace Analysis TD-MS (Double Wires)	$ 95.00/Analysis
NERI Headspace Analysis TD-GC/MS (Double Wires)	$170.00/Analysis
Data Tables	Price Upon Request

*Individual field surveys using 200 samplers or more per site are priced at $90.00/sampler.

PETREX Soil Gas Surveys include double wire samplers, mass spectral analysis of one wire, up to four (4) compound maps, and a sample location map.

Computer Services and Mapping

Customized Computerized Modeling	$100.00/Hour CPU Time
Additional Maps	$ 5.00/Sample/Map
Floppy Disk of Data	$ 25.00/Disk
Mass Spectral Plots	$ 3.00/Sample
Additional Copies of Maps	Price Upon Request

Field Services

Field services, training, and consulting services are provided on a quotation basis.

PPLEJHV2/7.6.90

B.2.0 RECOMMENDED CONTAINMENT STRUCTURE SIZES AND NUMBER OF ADVANCEMENTS REQUIRED

	A	B	C	D	E
1	GENERAL USE OPTION				
2					
3	Waste	Excavation	Containment		Containment
4	Site	Crest	Structure		Structure
5	Name	Dimensions	Size		Placements
6					
7	118-B-5	359' x 359'	600' x 400'		1
8	118-B-7	231' x 231'	400' x 400'		1
9	118-B-2	289' x 259'	400' x 400'		1
10	118-B-3	609' x 534'	600' x 400'		2
11	118-B-4	329' x 239'	400' x 400'		1
12	118-B-6	299' x 299'	400' x 400'		1
13	118-B-1	1259' x 580'	1000' x 400'		4
14	118-C-1	754' x 644'	1000' x 400'		3
15	118-D-5	379' x 379'	600' x 400'		2
16	118-DR-1	369' x 319'	600' x 400'		1
17	118-D-1	709' x 634'	1000' x 400'		2
18	118-D-2	1259' x 619'	1000' x 400'		4
19	118-D-3	1259' x 509'	600' x 400'		4
20	118-D-4	859' x 759'	600' x 400'		3
21	118-F-1	859' x 459'	1000' x 400'		3
22	118-F-2	627' x 585'	1000' x 400'		2
23	118-F-3	419' x 294'	600' x 400'		1
24	118-F-4	239' x 239'	400' x 400'		1
25	118-F-5	744' x 394'	600' x 400'		3
26	118-F-6	659' x 459'	600' x 400'		3
27	118-H-1	959' x 609'	1000' x 400'		3
28	118-H-3	559' x 459'	600' x 400'		2
29	118-H-4	379' x 259'	600' x 400'		1
30	118-H-5	235' x 215'	400' x 400'		1
31	118-K-1	1459' x 859'	1000 x 400'		5
32	E White Bluffs	329' x 329'	400' x 400'		1
33	White Bluffs	354' x 279'	400' x 400'		1
34	USBR 2,4D Burial	611' x 223'	400' x 400'		2
35	Barrel Disposal	329' x 279'	400' x 400'		1
36	Army Munitions	232' x 231'	400' x 400'		1
37	JA Jones 2	259' x 259'	400' x 400'		1
38	UN-100-F-1	269' x 269'	400' x 400'		1
39	UN-100-K-1	269' x 269'	400' x 400'		1
40	UN-100-N-13	232' x 231'	400' x 400'		1
41	UN-100-N-14	257' x 257'	400' x 400'		1
42	UN-100-N-17	257' x 257'	400' x 400'		1
43	UN-100-N-20	257' x 257'	400' x 400'		1
44	UN-100-N-24	257' x 257'	400' x 400'		1
45	UN-100-N-25	257' x 257'	400' x 400'		1
46	UN-100-N-26	257' x 257'	400' x 400'		1
47	UN-100-N-31	279' x 279'	400' x 400'		1
48	UN-100-N-4	268' x 268'	400' x 400'		1
49	UN-100-N-5	268' x 268'	400' x 400'		1
50	UN-100-N-8	234' x 234'	400' x 400'		1
51	UN-100-N-9	234' x 234'	400' x 400'		1
52	UN-100-N-1	241' x 241'	400' x 400'		1
53	UN-100-N-10	239' x 239'	400' x 400'		1
54	UN-100-N-12	232' x 231'	400' x 400'		1
55	UN-100-N-2	246' x 246'	400' x 400'		1

	A	B	C	D	E
56	UN-100-N-29	259' x 233'	400' x 400'		1
57	UN-100-N-3	233' x 233'	400' x 400'		1
58	UN-100-N-30	279' x 279'	400' x 400'		1
59	UN-100-N-32	279' x 279'	400' x 400'		1
60	UN-100-N-35	279' x 279'	400' x 400'		1
61	UN-100-N-7	268' x 268'	400' x 400'		1
62	UN-100-N-15	257' x 257'	400' x 400'		1
63	UN-100-N-18	257' x 257'	400' x 400'		1
64	UN-100-N-19	257' x 257'	400' x 400'		1
65	UN-100-N-21	257' x 257'	400' x 400'		1
66	UN-100-N-22	257' x 257'	400' x 400'		1
67	UN-100-N-23	257' x 257'	400' x 400'		1
68	UN-100-N-33	279' x 279'	400' x 400'		1
69	UN-100-N-34	279' x 279'	400' x 400'		1
70	UN-100-N-6	268' x 268'	400' x 400'		1
71	UN-600-17	279' x 279'	400' x 400'		1
72	UN-100-N-11	239' x 239'	400' x 400'		1
73	Riverland Wash Pit	269' x 235'	400' x 400'		1
74	116-B-12	239' x 239'	400' x 400'		1
75	116-B-3	239' x 239'	400' x 400'		1
76	116-B-5	313' x 245'	400' x 400'		1
77	116-B-6A	229' x 225'	400' x 400'		1
78	116-B-6B	225' x 221'	400' x 400'		1
79	116-C-2A	399' x 359'	600' x 400'		1
80	116-D-2	239' x 239'	400' x 400'		1
81	116-D-9	239' x 239'	400' x 400'		1
82	116-DR-4	239' x 239'	400' x 400'		1
83	116-DR-7	234' x 234'	400' x 400'		1
84	116-DR-8	239' x 239'	400' x 400'		1
85	116-F-4	239' x 239'	400' x 400'		1
86	116-F-5	239' x 239'	400' x 400'		1
87	116-H-4	209' x 209'	400' x 400'		1
88	116-H-9	239' x 239'	400' x 400'		1
89	White Bluffs Crib	279' x 279'	400' x 400'		1
90	116-K-1	629' x 629'	1000' x 400'		2
91	116-KE-1	317' x 317'	400' x 400'		1
92	116-KE-2	311' x 311'	400' x 400'		1
93	116-KW-1	317' x 317'	400' x 400'		1
94	116-N-1	525' x 360'	600' x 400'		1
95	116-B-10	223' x 223'	400' x 400'		1
96	116-B-4	263' x 263'	400' x 400'		1
97	116-B-9	212' x 212'	400' x 400'		1
98	116-D-3	217' x 217'	400' x 400'		1
99	116-D-4	217' x 217'	400' x 400'		1
100	116-D-6	211' x 211'	400' x 400'		1
101	116-F-10	232' x 232'	400' x 400'		1
102	116-F-11	211' x 211'	400' x 400'		1
103	116-F-12	220' x 220'	400' x 400'		1
104	116-F-13	211' x 211'	400' x 400'		1
105	116-F-7	263' x 263'	400' x 400'		1
106	116-H-3	247' x 247'	400' x 400'		1
107	120-KE-1	215' x 215'	400' x 400'		1
108	120-KE-2	211' x 211'	400' x 400'		1
109	120-KW-1	215' x 215'	400' x 400'		1
110	120-KW-2	211' x 211'	400' x 400'		1

	A	B	C	D	E
111	120-N-3	211' x 211'	400' x 400'		1
112	120-N-6	211' x 211'	400' x 400'		1
113	120-N-7	211' x 211'	400' x 400'		1
114	1200-N-8	211' x 211'	400' x 400'		1
115	116-KE-3	326' x 326'	400' x 400'		1
116	116-KW-2	326' x 326'	400' x 400'		1
117	116-C-2C	240' x 233'	400' x 400'		1
118	116-B-13	294' x 294'	400' x 400'		1
119	116-B-1	359' x 269'	400' x 400'		1
120	116-B-14	364' x 254'	400' x 400'		1
121	116-B-2	347' x 347'	400' x 400'		1
122	116-C-1	774' x 324'	1000' x 400'		1
123	116-DR-1	559' x 274'	400' x 400'		2
124	116-DR-2	409' x 269'	600' x 400'		1
125	116-D-1A	347' x 227'	400' x 400'		1
126	116-D-1B	344' x 254'	400' x 400'		1
127	116-DR-3	289' x 269'	400' x 400'		1
128	116-DR-6	279' x 239'	400' x 400'		1
129	116-F-1	3229' x 269'	1000' x 400'		4
130	116-F-2	544' x 294'	600' x 400'		1
131	116-F-3	332' x 252'	400' x 400'		1
132	116-F-6	529' x 329'	600' x 400'		1
133	116-F-9	726' x 241'	1000' x 400'		1
134	116-H-1	444' x 269'	600' x 400'		1
135	116-H-2	492' x 317'	600' x 400'		1
136	116-K-2	4259' x 309'	1000' x 400'		5
137	120-KE-3	248' x 211'	400' x 400'		1
138	120-KE-8	245' x 245'	400' x 400'		1
139	120-KW-6	245' x 245'	400' x 400'		1
140	120-KE-9	252' x 246'	400' x 400'		1
141	120-KW-7	252' x 246'	400' x 400'		1
142	116-B-11	721' x 501'	600' x 400'		3
143	116-C-5	859' x 529'	1000' x 400'		2
144	116-DR-9	859' x 532'	1000' x 400'		2
145	116-D-7	726' x 489'	600' x 400'		3
146	116-F-14	721' x 501'	600' x 400'		3
147	116-H-6	421' x 421'	600' x 400'		2
148	116-H-7	859' x 532'	1000' x 400'		2
149	116-KE-4	949' x 449'	600' x 400'		3
150	116-KW-3	949' x 449'	600' x 400'		3
151	118-KE-2	299' x 215'	400' x 400'		1
152	118-KW-2	299' x 215'	400' x 400'		1
153	126-B-2	1016' x 400'	600' x 400'		4
154	118-F-7	239' x 231'	400' x 400'		1
155	118-H-2	384' x 294'	400' x 400'		1
156	116-B-7	301' x 288'	400' x 400'		1
157	116-B-8	301' x 288'	400' x 400'		1
158	132-C-2	301' x 288'	400' x 400'		1
159	116-DR-5	301' x 288'	400' x 400'		1
160	116-D-5	334' x 288'	400' x 400'		1
161	116-F-8	301' x 288'	400' x 400'		1
162	116-H-5	301' x 288'	400' x 400'		1

B.3.0 EXCAVATION EQUIPMENT PERFORMANCE DATA

1. Front-End Loaders

Source: *Caterpillar Performance Handbook*, 19th Edition, 1988.

A. Caterpillar 988 B (Caterpillar is a trademark of Caterpillar Inc.)

Bucket capacity: Heaped 7.0 yd^3
Struck 6.1 yd^3

Using 30% swell, the heaped capacity of the loader bucket is 5.4 Byd^3.

Basic cycle time for truck loading	0.60 min
Tramming time loaded (450 ft)	0.35
Tramming time empty (450 ft)	0.35
	1.30 min

Assuming that each 8-h shift includes 7 h of effective work, each of 50 effective minutes:

Volume excavated per shift = 5.4 x 7 x 50/1.30 = 1,454 Byd^3.

Estimated excavating capacity of Caterpillar 988 B Loader is, therefore,

1,454 ÷ 8 = 192 Byd^3/h

B. Caterpillar 992 C

Bucket capacity: Heaped 13.0 yd^3
Struck 10.9 yd^3

Using 30% swell, the heaped capacity of the loader bucket is 10.0 Byd^3.

Basic cycle time for truck loading	0.75 min
Tramming time loaded (450 ft)	0.45
Tramming time empty (450 ft)	0.45
	1.65 min

Assuming that each 8-h shift includes 7 effective working hours, each of 50 effective min:

Volume excavated per shift = 10.0 x 7 x 50/1.65 = 2,121 Byd^3

Estimated excavating capacity of Caterpillar 992 C Loader is, therefore,

2,121 ÷ 8 = 265 Byd^3/h

2. Belt Conveyors

Source: *Nordberg Process Machinery Reference Manual*, 1st Edition, 1976.

Estimated production of Caterpillar 992 C Loader is 2,121 Byd^3/shift.

Estimated production per effective hour = 2,121 ÷ 7 = 303 Byd^3.

At a bulk density of 100 lb/ft^3 (Statement of Work, Rev. 6):

$$\text{Estimated tonnage} = \frac{303 \times 27 \times 100}{2{,}000} = \underline{409 \text{ tons/effective hour}}.$$

From Tables

Capacity of 36-in. belt with 20° troughing idlers running at 300 ft/min is 700 tons/h; at 350 ft/min, the capacity is 820 tons/h. With 36° troughing idlers, the capacities at 300 and 350 ft/min are 900 and 1,050 tons/h, respectively.

A 36-in. conveyor belt will carry 15-in. lumps mixed with 90% fines. The specific job requirement is to carry 12-in. lumps mixed with 95% fines. This is within the capabilities of a 36-in. belt.

The maximum belt speed for a 36-in. belt carrying 100 lb/ft^3 material is 650 ft/min.

Drive Motor Requirements

Belt width:	36 in.
Belt speed:	300 ft/min
Length of belt:	400 ft - Horizontal belts 800 ft - Inclined belts
Maximum loading:	800 tons/h
Vertical lift:	Inclined belts - 100 ft (from bottom of excavation to loading bin) Horizontal belts - 5 ft (to feed onto inclined belts).

Horsepower Required (from Tables)

Horizontal belts: [(1.5 x 3.0) + 10.7 + 4.0] x 1.07 = 20.54(25) Hp

Inclined belts: [(2.5 x 3.0) + 17.8 + 81.0] x 1.07 = 113.74(120) Hp

3. Clamshell Dredging Equipment

One clamshell dredge will be required for underwater pipeline removal. Specifications of a suitable dredge are:

Model:	Floating Grab Dredge with lutting jib, Type A 2.6, manufactured by ROHR America
Grab capacity:	5.2 yd^3
Load:	22 tons
Lifting:	246 ft/min
Lowering:	360 ft/min
Cross traveling:	100 ft/min
Dredging depth:	200 ft
Installed hoisting power:	310 Hp
Dredging capacity at 65 ft:	200 yd^3/h

B.4.0 DEMOLITION EQUIPMENT SPECIFICATIONS

This section details the specifications for demolition equipment recommended for use in remediation of the 100 Areas (see Section 3.2.3 of the main body of the report). The equipment specifications are developed on the basis of providing contingencies for variations in waste forms and quantities required. Therefore, heavy-duty application equipment is recommended to meet worst-case scenarios.

The demolition equipment recommended consists of excavators and hydraulically operated, boom-mounted attachments. The attachments and excavators recommended are specified below.

B.4.1 MATERIAL DENSIFIER

The material densifier is an attachment used to "crimp" sections of pipelines. This crimp provides a partial seal to each end of pipe as preparation for cutting and application of a Gunite cap (see Section 3.2.3).

Material densifiers are typically used for industrial applications such as crushing automobiles, trucks, landfill scrap, and other similar materials.

Attachment:	LaBounty Manufacturing, Inc. Material Densifier MD50	
Specifications:	70,000 lb	Base excavator weight
	9,000 lb	Attachment weight
	0 in.	At full close
	63.5 in.	At full open
	98 in.	Overall height
	40 in.	Overall width

Options:

- Stick mounting (as opposed to boom mounting) for maximum reach and separation between operator and pipe
- Full opening capability of 84 in. for largest diameter pipeline anticipated. (Available upon Request)

B.4.2 UNIVERSAL PROCESSOR

The universal processor is an attachment with interchangeable jaw options that allow cutting and processing different materials with a single attachment. The materials that can be processed with the universal attachment are metal, wood, concrete, and general handling. For specific demolition applications in the 100 Areas, see Section 3.2.3.

Universal processors are commonly used for industrial applications such as scrap recycling, general demolition, and concrete processing.

Attachment: LaBounty Manufacturing, Inc.
Universal Processor
UP90

Specifications:	90,000 lb	Base excavator weight
	16,000 lb	Attachment weight
	13.0 ft	Attachment reach

Jaw Specifications:	Jaw Opening	Jaw Depth
Shear jaws	42.25 in.	31.75 in.
Concrete cracking jaws	72.00 in.	41.00 in.
Grapple jaws	85.00 in.	64.00 in.
Wood jaws	65.00 in.	44.00 in.
Plate jaws	16.00 in.	23.00 in.

Options:

- Stick mounting (as opposed to boom mounting) is available, although a larger base excavator would be required
- Larger jaw dimensions are available upon request.

B.4.3 HYDRAULIC HAMMER

The hydraulic hammer is an attachment that provides contingency for concrete structures of excessive size that cannot be processed with shear or concrete cracking jaws. The hammer will break up large concrete items or boulders into sizes amenable to the universal processors (see Section 3.2.3).

Hydraulic hammers are designed for use for such jobs as hard rock mining, heavy quarry work, and bridge and road demolition.

Attachment: KENT
Hydra Ram
50GII

Specifications:	70,000 lb	Base excavator weight
	8,900 lb	Attachment weight
	136 in.	Length with bracket
	250/500	Blows per minute (variable)
	10,000 ft/lb	Impact energy

Options:

- Stick mounting (as opposed to boom mounting) for maximum reach and separation between operator and materials being processed.

B.4.4 BASE EXCAVATOR

The largest base excavator required for operating demolition tools (90,000 lb) is recommended for use with all tools. The larger machine will provide utility for interchanging machines and tools without compatibility problems. In other words, all excavators will be capable of operating any demolition tool (with minor mounting adjustments) that may be required for a particular situation (see Section 3.2.3).

Excavator:	Caterpillar Inc., 1988 Hydraulic Excavator 235C	
Specifications:	92,830 lb	Base excavator weight
	250 Hp	Flywheel power
	29 ft	Approx. Max. height reach
	25 ft	Approx. Max. depth reach
	34 ft	Approx. Max. horizontal reach

NOTE: Reach dimensions approximated on the basis of a boom-mounted universal processor (UP90).

B.5.0 RAIL TRANSPORT CALCULATIONS

B.5.1 CALCULATION FOR FREIGHT TRAIN REQUIREMENTS AND FLATCARS REQUIRED

The methodology for estimating the number of trains required and the number of flatcars necessary for each train is based on Hay (1977). The following assumptions have been used in the calculations:

- Capacity of approximately 606 tons/h including both contaminated soil and solid waste. This has been based on the total expected amount of waste to be transported over a period of 60,000 h
- Average round-trip distance of 30 mi from the 100 Areas to the disposal site in the 200 Areas
- Average speed of 15 mi/h for railcars carrying loaded containers from the 100 to the 200 areas, and an average speed of 20 mi/h for railcars bringing back empty containers from the 200 Areas after they have been unloaded
- Weight of unshielded steel container (24 x 8 x 7 ft, 1/4-in. thickness) is equal to approximately 8.5 tons (based on the density of steel equal to 489 lb/ft^3)
- Average loading of containers is 80% of their full capacity
- Two 8-h shifts per day for 6 months during summer and fall, and one 8-h shift per day during the remainder of the year.

The flatcars selected for the purpose are the General Electric bulkhead flatcars with a nominal capacity of 100 tons and an average lightweight of 81,500 lb (40.75 tons). Since the weight of the empty container is 8.5 tons, the actual waste payload can be a maximum of 91.5 tons. Assuming that the average container is filled to 80% of its total volume, the waste payload per 50-yd^3 container is 0.8 x 50 = 40 yd^3.

The weight of 40 yd^3 of waste can be calculated by assuming an average density of waste as follows:

	Volume (ft^3)	Weight (tons)
Combustibles	14,240,000	1,032,400
Discrete metals	48,418,000	12,104,500
Demolition wastes	44,146,000	3,200,600
Soil	400,379,000	20,018,950
	507,183,000	36,356,450

Therefore, the average density is given by

$$= \frac{36,356,450}{507,183,000}$$

$$= 1.93544 \text{ tons/yd}^3$$

Thus, the weight of 40 yd^3 of waste is given by

$$= 40 \text{ yd}^3 \times 1.93544 \text{ tons/yd}^3$$

$$= 77.41 \text{ tons.}$$

Defining an empty car as the actual flatcar together with one empty container, the weight of an empty car for the purpose of calculation is given by

$$40.75 \text{ tons} + 8.5 \text{ tons} = 49.25 \text{ tons.}$$

Total tons to move per day is given by

$$W = 606 \text{ tons/h} \times 8 \text{ h/shift} \times 2 \text{ shifts/day} = 9696 \text{ tons/day.}$$

Gross ton equivalent is given by

$$W_g = W + (2W/R_p)$$

where

R_p = payload to empty weight ratio

$= 77.41/49.25$

$= 1.57.$

So, $W_g = 9696 + (2 \times 9696/1.57) = 22,047.59$ tons.

Gross tons moved per train per day is given by

$$W_d = (W_n + 2W_e)N_t$$

where

W_n = net cargo tons = 77.41 x # of flatcars per train 'n' = 77.41n

W_e = empty weight of train = 49.25n

N_t = number of round trips per train.

The number of round trips per train is further defined as

$$N_t = \frac{16 \text{ h}}{(T_c + T_e + T_t)}$$

where

T_c = travel time with cargo = 15 mi/15 mi/h = 1 h

T_e = travel time for empty train = 15 mi/20 mi/h = 0.75 h

T_t = terminal delay time due to loading and unloading.

The terminal delay time T_t is dependent on the number of flatcars per train and the number of containers per flatcars. It is estimated that a mobile gantry crane would be able to load/unload approximately 20 containers per hour taking 3 min for each container (United Nations 1973). Therefore, the total time taken for loading and unloading operations can be assumed to be approximately 6 min per container. If the number of flatcars required per train is 'n', then for one container per flatcar, the total loading/unloading time is given by

$$6 \text{ min/container} \times 1 \text{ h/60 min} \times n \text{ containers} = 0.1n \text{ h}.$$

Because there are terminals at both the 100 and 200 areas, the total terminal delay time is given by

$$T_t = 2 \times 0.1n$$

$$= 0.2n \text{ h}.$$

Thus, the number of round trip per train is given by

$$N_t = \frac{16 \text{ h}}{(1 + 0.75 + 0.2n)}.$$

The gross tons moved per train per day is thus given by

$$W_d = (77.41n + 2 \times 49.25n) \times \frac{16 \text{ h}}{(1 + 0.75 + 0.2n)}$$

or $$W_d = \frac{14{,}072n}{n + 8.75}.$$

The number of trains required is then given by

$$N = W_g/W_d$$

$$= 22{,}047.59 \times \frac{n + 8.75}{14.072n}.$$

If the number of flatcars per train is increased, the number of trains required decreases, as does the number of round trips required per train. However, increasing the number of cars will also increase the loading and unloading time required, and thus, will have a negative effect on the total terminal delay time by increasing it. Thus, there is an optimum number of flatcars per train beyond which the increase in delay time due to additional cars will have a detrimental effect on the overall logistics of the operation.

Figure B.5-1 illustrates the variation in delay time, number of trains required, and number of round trips required, based on the number of flatcars per train. As shown in Figure B.5-1, the area within the circle denotes optimum operation and shows that this optimum number ranges from 13 to 16 cars, at approximately 2.4 trains making slightly more than 3 round trips per day. It should be noted that the process of optimization presented here is bounded by the limitations of a conceptual design. A rigorous optimization will require comprehensive and precise data for all the variables involved in the calculations. The calculations in the following sections illustrate the operation of the transportation system based on 3 trains making 3 round trips with 16 flatcars per train. Since the actual requirement is only 2.4 trains, an operation based on 3 trains will be overdesigned because it will be able to transport a total of 11,145 tons/day at a rate of 696 tons/h (that is considerably higher than the requirement of 606 tons/h). However, it should be noted that since 5% of the waste is expected to require containers shielded with lead, the waste payload per lead-shielded container will be reduced due to the extra weight of lead. This will lead to either an increased number of round trips per train or an increased number of flatcars per train. Thus, the overdesign should comfortably account for any extra flatcar requirements during the transportation of shielded containers.

B.5.2 CALCULATION OF LOCOMOTIVE REQUIREMENTS

The locomotive requirements have been calculated from information obtained from Railway Equipment Corporation. Because the locomotive requirements are dependent on the degree of track curve and the track grade, it has been assumed that the existing rail network at the Hanford Site is on relatively flat surface (i.e., 0% track grade), and it has no more than 10° track curve for the entire network.

Given these assumptions, the draw bar pull required for a 0% track grade and a 10° track curve is equal to 15 lb/ton of load. The total load on the locomotive for 16 cars is given by

Total load = Weight of 16 cars + Weight of containers + Weight of waste

= 16 x 40.75 + 16 x 8.5 + 16 x 77.41 = 2,026.56 tons.

Therefore, total draw bar pull required is given by

= 2,026.56 tons x 15 lb/ton = 30,398.4 tons.

Thus, the locomotives selected for hauling the three freight trains should each have a minimum draw bar pull of approximately 30,400 lb.

B.5.3 DESCRIPTION OF THE SYSTEM OPERATION

The continuous operation of the transportation system using three freight trains is shown in Figure B.5-2 and described below. Based on the optimum range of 13 to 16 cars, the operation of the system is illustrated below using 16 flatcars per train as an example.

B.5.3.1 Freight Train A

At the start of the first shift, freight train A will be stationed at the 100 Areas. It will consist of 16 flatcars, each carrying 1 large container (24 x 8 x 7 ft) loaded the previous day with roughly 77 tons of waste. This train will take 1 h to travel to the 200 Areas. Once it reaches the 200 Areas, the 16 containers of waste will be unloaded by a mobile gantry crane having an average loading/unloading capacity of 20 containers per hour, and moved to a waste handling terminal.

After the 16 containers of waste have been unloaded from the flatcars, the freight train will move a short distance to a loading dock where a second batch of 16 empty containers will be ready for emplacement on the flatcars. Thus, to keep the operation continuous and prevent any delay due to the time taken in emptying a container, an extra set of 16 containers is required at the 200 Areas. Meanwhile, the containers that are emptied at the waste-handling terminal would be transported by a mobile gantry crane to the loading dock where they can be loaded back onto the next freight train. The complete operation of unloading the 16 containers of waste from the flatcars and loading 16 empty containers back on the flatcars is expected to take roughly 1.6 h.

The freight train with the 16 empty containers will then travel back to the 100 Areas in 45 min and will go through unloading/loading procedures (similar to the 200 Areas waste-handling terminal) at each of the 100 Area sites. The number of empty containers unloaded at a given site would be proportional to the expected volume of waste being excavated from that site. For example, if the 100 B and C sites are expected to account for a third of the excavated waste, then a third of the 16 empty containers (i.e., roughly 5 containers) will be unloaded at these sites, and 5 containers of waste from these sites will be loaded back on to the flatcars. Once the unloading and loading of 16 containers are completed, the freight train will travel back to the 200 Areas to continue with similar procedures. At the end of the day, freight train A will be back at the 100 Area having completed 3 round trips, and will be loaded with 16 containers of waste ready to depart the next morning at the start of the shift.

The cycle time for the transportation system is such that a freight train departing from a given area (e.g., the 100 Area) at the start of a workday will be back at the same area at the end of that day (and vice-versa).

B.5.3.2 Freight Train B

Freight train B will depart each morning from the 200 Areas with 16 empty containers. After reaching the 100 Area sites, it will go through similar procedures as described for freight train A. As shown in Figure B.5-2, at the end of a 16-h working day, freight train B will be back at the 200 Areas, loaded with 16 empty containers of waste ready to leave the following morning. In the process, it will also have completed three round trips.

B.5.3.3 Freight Train C

Freight train C essentially will follow a schedule similar to that of freight train A, except that it will start the day with unloading and loading operations at the 100 Areas. This will help to ease the work load at the loading and unloading areas. The unloading of 16 empty containers and loading of 16 containers of waste will take about 1.6 h, and thus freight train C will closely follow train A with a time-lag of 1.6 h. After completing 3 round trips, train C will finish each day at the 100 Areas waiting to unload 16 empty containers the next morning.

B.5.3.4 Operation During Winter and Spring (8-Hour Workday)

During the 6 months of the year when operation will be limited to one 8-h shift per day, the overall schedule will remain the same with one exception. Each train will now complete the 16-h schedule in Figure B.5-2 in 2 working days (instead of 1). Thus, after one 8-h shift, transportation operations will stop for the day and continue the following day to complete the three round trips. Therefore, the overall rate of waste transportation will still satisfy the minimum rate of 606 tons/h, but the throughput per day will be reduced by half.

9513354.0111

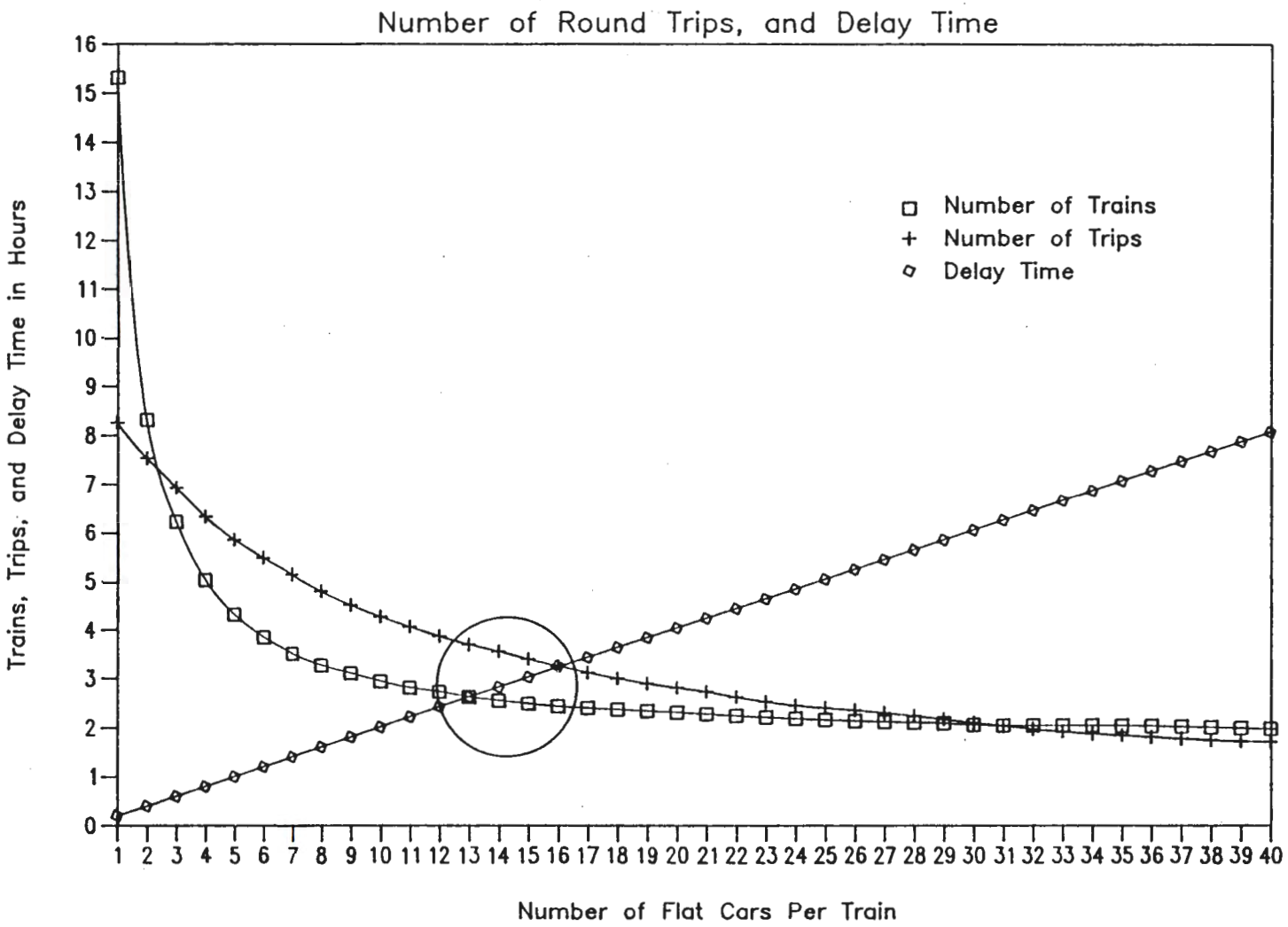

Figure B.5-1. Effect of Number of Cars on Number of Trains.

MRA\050592-D

Figure B.5-2. Operation of the Transportation System (Two 8-hour Shifts Per Day).

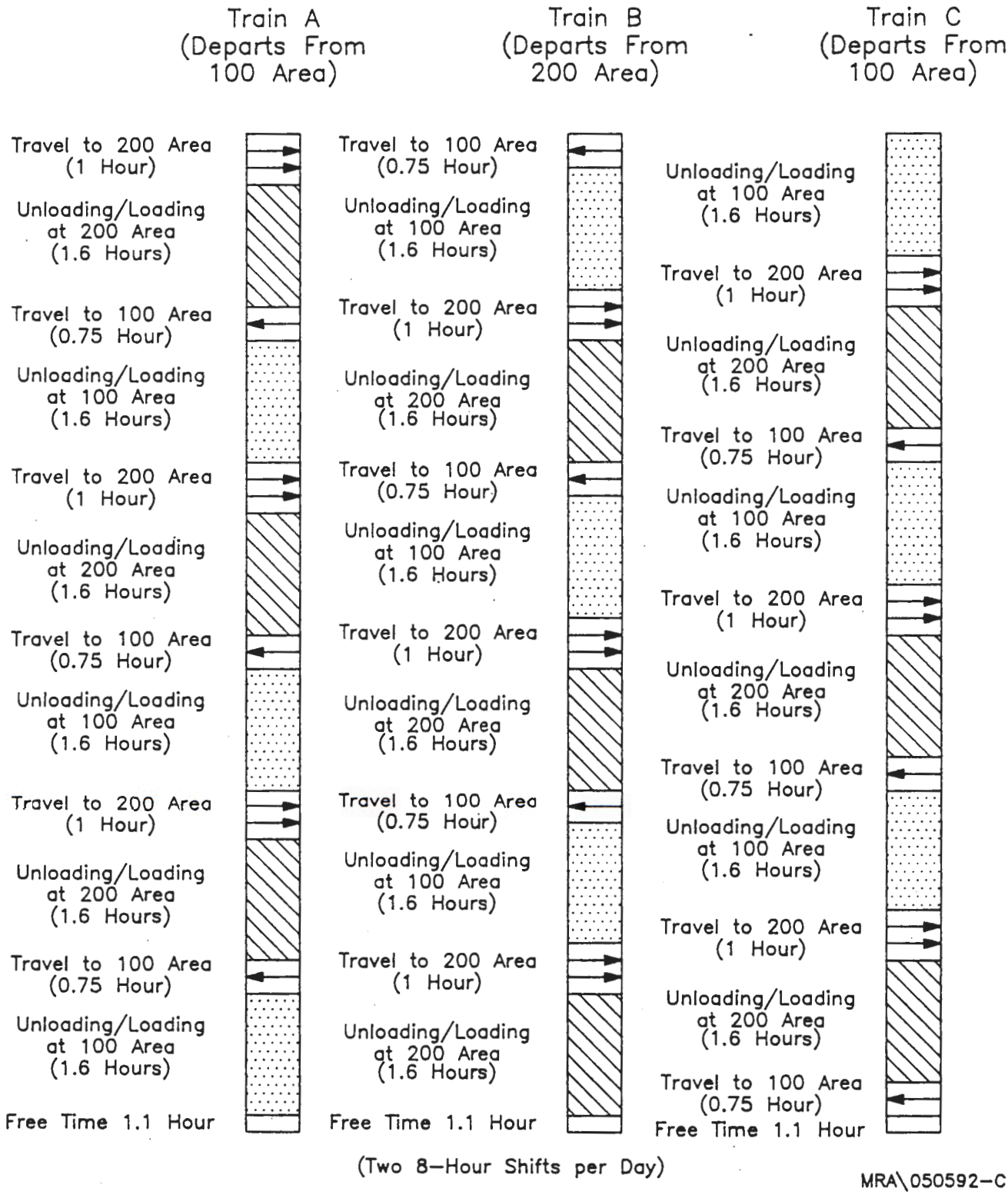

B.6.0 CONTAINER CALCULATIONS

B.6.1 CONTAINERS FOR GENERAL USE OPTION

Basis: Waste quantity distribution as given in Figure 7-1.

Assumptions: Maximum number of containers is to be based on:

1. A 16-h work day
2. Three operating freight trains
3. Sixteen containers per freight train
4. Three round trips to the 200 Areas per train per day
5. There is a 2-day backlog of containers awaiting analytical results from the mobile laboratory.
6. The peak number of containers filled in a day is 25% greater than the average 20-yr rate (60,000 h of operation).
7. Quantity of unshielded overpacks is equal to the quantity of Type 1 containers, i.e., containers are stored or transported inside the overpack.
8. Quantity of shielded overpacks is equal to the quantity of filled high-activity containers that are either in storage or in transit, including empty containers returning from the 200 Areas.
9. Containers are filled to 80% capacity, i.e., 40 yd^3/container.

Type 1 Containers

Peak total of Type 1 containers filled in a day from Table 7-1 is 41.

To estimate the number of Type 1 containers in transit or on standby, assume worst case that all the containers in transit or on standby are Types 1 and 2. The total number of containers in transit or at the 200 Areas being emptied at a given time is:

3 trains x 16 containers/train + 16 containers at 200 Areas
= 64 containers (Type 1 + Type 2)

Assume also that each excavation site has 16 empty containers on standby:

3 sites x 16 containers/site
= 48 containers (Type 1 + Type 2)

Total transit/standby containers = 112

From Table 7-1, the fraction of Type 1 to total containers is
121,970/121,970 + 388,977 = 0.24

Therefore, Type 1 = 0.24 x 112 = 27

Thus, the total number of Type 1 containers = 27 + 2 days x 41/day filled = 109 containers.

Type 2 Containers

Peak total of Type 2 containers filled in a day from Table 7-1 is 130.

Similar to the analysis for Type 1 containers, the total number of Type 2 containers in transit or standby is 112 - 0.24 x 112 = 85 containers.

Thus, the total number of Type 2 containers is:

85 + 2 days x 130 filled/day = 345 containers.

Type 3 and 4 Containers

Since Type 3 and 4 containers are single-use containers, the total quantity of these is the same as the Table 7-1 quantities.

Type 3 containers = 8,042 containers
Type 4 containers = 12,495 containers.

Overpacks

The quantity of unshielded overpacks is the same as the quantity of Type 1 containers = 109.

To estimate the quantity of shielded overpacks, recognize that it has been assumed that the quantity of high-activity waste is 5% of the total volume of waste. There are a total of 109 + 345 = 454 Type 1 and 2 containers in storage or transit at a time. 5% x 454 = 23. Thus, assume that 23 shielded overpacks must be in inventory to account for high-activity waste in transit or in storage.

Summary

Type 1: 109 reusable
Type 2: 345 reusable
Type 3: 8,042 single use
Type 4: 12,495 single use
Unshielded Overpack: 109 reusable
Shielded Overpack: 23 reusable.

B.6.2 CONTAINERS FOR TEN TIMES VOLUME

As stated in Chapter 10.0, waste quantities are increased only for soil and buried waste. Demolition wastes are not increased. It is assumed, however, that the volume of high-level waste increases proportionately with the increased volumes of soil and buried waste.

To estimate container counts, the increases in soil and buried waste must first be estimated as follows:

	Container type	Base volume	10x volume
Soil			
Low Activity >12 in.	1	22,112,000	221,120,000
Low Activity <12 in.	2	420,116,000	4,201,160,000
High Activity >12 in.	3	710,000	7,100,000
High Activity <12 in.	4	13,495,000	134,950,000
Buried Waste			
Low Activity	1	39,339,000	393,390,000
High Activity	3	6,942,000	69,420,000
Demolition Waste			
Low Activity	1	63,265,000	63,265,000
High Activity	3	1,033,000	1,033,000

	Cubic feet	Total number containers	Peak containers filled/day
Type 1	677,775,000	627,569	209
Type 2	4,201,160,000	3,889,963	1,297
Type 3	77,553,000	71,808	24
Type 4	134,950,000	124,953	42

Transit/standby containers are estimated as follows:

7 trains x 25 containers/train + 11 sites (incl. 200 Areas) x 25 containers/site = 450 containers in transit/standby

The proportion of Type 1 to total Type 1 + Type 2 is 0.13

Therefore, transit/standby Type 1 = 0.13 x 450 = 59
Type 2 = 450 - 59 = 391

Therefore, Total Type 1 = 59 + 2 days x 209/day = 477 containers
Type 2 = 391 + 2 days x 1,297 = 2,985 containers

Summary

Type 1: 477 reusable
Type 2: 2,985 reusable
Type 3: 71,808 single use
Type 4: 124,953 single use
Unshielded Overpack: 477 reusable
Shielded Overpack: 173 reusable

B.6.3 CONTAINERS FOR TEN TIMES DECREASE IN VOLUME

To estimate container counts, the decreases in soil and buried waste must first be estimated as follows:

	Container type	Base volume	1/10x volume
Soil			
Low Activity >12 in.	1	22,112,000	2,211,200
Low Activity <12 in.	2	420,116,000	42,011,600
High Activity >12 in.	3	710,000	71,000
High Activity <12 in.	4	13,495,000	1,349,500
Buried Waste			
Low Activity	1	39,339,000	3,933,900
High Activity	3	6,942,000	694,200
Demolition Waste			
Low Activity	1	63,265,000	63,265,000
High Activity	3	1,033,000	1,033,000

	Cubic feet	Total number containers	Peak containers filled/day
Type 1	69,410,100	64,269	21
Type 2	42,011,600	38,899	13
Type 3	1,798,200	1,665	<1
Type 4	1,349,500	1,250	<1

Transit/standby containers are estimated as follows:

3 trains x 16 containers/train + 3 sites (incl. 200 Areas) x 16 containers/site = 96 containers in transit/standby

The proportion of Type 1 to total Type 1 + Type 2 is 0.13

Therefore, transit/standby Type 1 = 0.13 x 96 = 13
Type 2 = 96 - 13 = 83

Therefore, Total Type 1 = 13 + 2 days x 21/day = 55 containers
Type 2 = 83 + 2 days x 13/day = 109 containers

Summary

Type 1: 55 reusable
Type 2: 109 reusable
Type 3: 1,665 single use
Type 4: 1,250 single use
Unshielded Overpack: 55 reusable
Shielded Overpack: 8 reusable

B.6.4 CONTAINERS FOR 10-YEAR OPERATING TIME

For this case the waste volumes are the same as given in Table 7-1 and the total number of containers is the same. However, the peak rate of container filling is doubled from the values given in the table.

Thus, Type 1 peak filling rate is 2 x 41 = 82 containers/day
Type 2 peak filling rate is 2 x 130 = 260 containers/day

Transit/standby containers:

5 trains x 20 containers/train + 5 sites (incl. 200 Areas) x 20 containers/site = 200 containers in transit/standby

Proportion of Type 1 = 0.24 x 200 = 48
Proportion of Type 2 = 200 - 48 = 152.

Therefore, total Type 1 = 48 + 2 days x 82/day = 212 containers
Type 2 = 152 + 2 days x 260/day = 672 containers

Summary

Type 1: 212 reusable
Type 2: 672 reusable
Type 3: 8,042 single use
Type 4: 12,495 single use
Unshielded Overpack: 212 reusable
Shielded Overpack: 44 reusable

B.7.0 VENDOR BIBLIOGRAPHY

Instrumentation Distributors Contacted

B.7.1 VOC ANALYSES INSTRUMENTATION

MICROSENSOR SYSTEMS, INC.
6800 Versar Center Suite 118
Springfield, VA 22151
ph (703)642-6919

HILLTECH
457B Washington S.E.
P.O. Box 4946
Albuquerque, NM 87106
ph (505)-268-1733

SAFETY SUPPLY AMERICA CORPORATION
3901 Academy Parkway North N.E.
Albuquerque, NM 87109
ph (505)-345-5548

Niel West

TELOSENSE
51 Whitney Place
Fremont, CA 94539
ph (415)-490-2087
FAX (415)-490-6485

William (Bill) Scott

GASTECH
8445T Central Ave.
Newark, CA 94560-3431
ph (415)-794-6200
FAX (415)-794-6210

John Villaovas (415)-745-1232

QUADREL Services Inc.
10075 Tyler Place #9
Ijamsville, MD 21754
ph (301)-874-5510
1-800-878-5510

John La Fond

B.7.2 GEOPHYSICAL INSTRUMENTATION

GISCO
900 N. Broadway
Denver, CO 80203
ph (303)-863-8881
FAX (303)-832-1461

HIENZ
250 Meadowfern
Suite 102
Houston, TX 77067
ph (713)-872-9100
FAX (713)-872-7916

MARTEL
1025 Cromwell Road
Baltimore, MD 21204
ph (301)-825-7790
FAX (301)-821-1054

B.7.6 BOOK REFERENCES

RADIOACTIVE WASTE MANAGEMENT
Robert E. Berlin & Catherine C. Stanton
John Wiley & Sons, Inc. 1989

Principles of Radiological Health
Earnest F. Gloyna/Joe O. Ledbetter
Marcel Dekker Inc. 1969

Introduction to Geophysical Prospecting
Milton B. Dobrin
McGraw-Hill, Inc. 1976

B.8.0 REFERENCES

Caterpillar Inc., 1988, *Caterpillar Performance Handbook*, Edition 19, CAT Publication, Peoria, Illinois.

Hay, W. W., 1977, *An Introduction to Transportation Engineering*, 2nd ed., John Wiley & Sons, New York, New York.

Rexnord Inc., 1976, *Nordberg Process Machinery Reference Manual*, 1st Edition, Process Machinery Division.

United Nations, 1973, *Physical Requirements of Transport Systems for Large Freight Containers*, ST/ECA/170, United Nations Publication, Department of Economics and Social Affairs, New York, New York.

APPENDIX C

MINUTES OF PANEL MEETING

CONTENTS

C.1.0 100 AREA MACROENGINEERING MINUTES OF PANEL MEETING APRIL 2-4, 1991 . . . . . C-1
C.1.1 ATTENDEES C-1
C.1.2 HANDOUTS C-1
C.1.3 BACKGROUND C-2
C.1.4 APPROACH C-3
C.1.5 RESULTS OF 300 AREA PANEL MEETING C-3
C.1.6 EVALUATION METHODOLOGY AND CRITERIA C-3
C.1.7 DISCUSSION AND EVALUATION OF ALTERNATIVES C-3
C.1.8 INDUSTRIAL USE OPTION C-22
C.1.9 PLANS FOR FURTHER EVALUATION C-22
C.1.10 REFERENCES C-22

TABLE:

C.1.1. Soil Excavation Evaluation Results C-6

APPENDIX C

MINUTES OF PANEL MEETING

C.1.0 100 AREA MACROENGINEERING MINUTES OF PANEL MEETING APRIL 2-4, 1991

C.1.1 ATTENDEES

Jerry Chiaramonte - IT
Dave Myers - IT
Holly Harrison - IT
John Mc Fee - IT
Alex Sanders - Consultant (Mining)
Greg Terdich - ATK
Don Rokkan - SAIC (4/2, half day)

C.1.2 HANDOUTS

Each panel participant was given a binder containing information relevant to the task as follows.

C.1.2.1 Tab 1 - Task Description

- Statement of Work
- Work Breakdown Structure
- Report Outline (extracted and modified from Statement of Work).

C.1.2.2 Tab 2 - Waste Site Information

- 100 Area Contaminants of Concern (a listing of chemical/radiological constituents extracted from work plans and other source documents)
- Waste Management Unit Categorization (a sorted list of waste sites categorized by type of waste and/or site
- Additional Waste Site Information (excerpted information from a 1984 study (Adams et al. 1984) providing useful waste site descriptions.

Table C.1-1. Soil Excavation Evaluation Results. (sheet 1 of 2)

EXCAVATION: soils		options:					
		power shovel		hydraulic excavator		underground wheel loader	
criteria	weighting	raw score	wt score	raw score	wt score	raw score	wt score
1. capacity/rate	MUST	GO	GO	GO	GO	GO	GO
2. depth	MUST	GO	GO	GO	GO	GO	GO
3. remote operation or shielded	MUST	GO	GO	GO	GO	GO	GO
4. compatibility w/ conveyors	MUST	GO	GO	GO	GO	GO	GO
5. excavation control	10	8	80	8	80	7	70
6. reliability/maintainability	8	7	56	7	56	6	48
7. capital cost	7	6	42	8	56	8	56
8. availability/development	5	5	25	5	25	10	50
9. overhead clearance	2	6	12	6	12	10	20
10. transportability/maneuverability	2	2	4	2	4	10	20
11. power type	2	10	20	2	4	2	4
	total score:		239		237		268

		surface wheel loader		wheel tractor-scraper		dragline	
criteria	weighting	raw score	wt score	raw score	wt score	raw score	wt score
1. capacity/rate	MUST	GO	GO				
2. depth	MUST	GO	GO				
3. remote operation or shielded	MUST	GO	GO				
4. compatibility w/ conveyors	MUST	GO	GO	NO	NO	NO	NO
5. excavation control	10	10	100				
6. reliability/maintainability	8	10	80				
7. capital cost	7	10	70				
8. availability/development	5	8	40				
9. overhead clearance	2	10	20				
10. transportability/maneuverability	2	10	20				
11. power type	2	2	4				
	total score:		334		NO		NO

9513354.0119

Table C.1-1. Soil Excavation Evaluation Results. (sheet 2 of 2)

		clamshell excavator		bucket wheel excavator		continuous miner	
criteria	weighting	raw score	wt score	raw score	wt score	raw score	wt score
1. capacity/rate	MUST	GO	GO	GO	GO	NO	NO
2. depth	MUST	GO	GO	GO	GO		
3. remote operation or shielded	MUST	GO	GO	GO	GO		
4. compatibility w/ conveyors	MUST	GO	GO	GO	GO		
5. excavation control	10	3	30	2	20		
6. reliability/maintainability	8	10	80	4	32		
7. capital cost	7	6	42	4	28		
8. availability/development	5	5	25	5	25		
9. overhead clearance	2	2	4	7	14		
10. transportability/maneuverability	2	4	8	4	8		
11. power type	2	2	4	2	4		
	total score:		193		131		NO

		backhoe	
criteria	weighting	raw score	wt score
1. capacity/rate	MUST	NO	NO
2. depth	MUST		
3. remote operation or shielded	MUST		
4. compatibility w/ conveyors	MUST		
5. excavation control	10		
6. reliability/maintainability	8		
7. capital cost	7		
8. availability/development	5		
9. overhead clearance	2		
10. transportability/maneuverability	2		
11. power type	2		
	total score:		NO

- Availability/development: Scores reflect the state of development and/or assessment of the amount of work/development required to modify conventional equipment to add features such as shielding on operator cabs. The high score for underground wheel loader is given because it is operated remotely

- Transportability: Ideally the excavation equipment can drive away from the waste site without being loaded on a separate transporter vehicle. Therefore, high scores were given to wheel loaders

- Compatibility with conveyors: Wheel tractor-scraper does not have an unloading mechanism capable of dumping onto a conveyor; dragline will likely bury a conveyor, even with a skilled operator

- Overhead clearance: Clamshell and bucketwheel scored low because they have high booms which would require a taller containment structure.

The results of the evaluation showed the surface wheel loader modified with a shielded cab to be the clear choice for this application. Loaders are commercially available with bucket sizes up to about 13 yd^3. Although loaders are not normally used for excavation, they could easily handle the unconsolidated Hanford soils at the required rates. Major equipment operating inside the containment structure would be diesel powered with catalytic converters on the exhaust and would be equipped with supplied air systems for the operating cab.

NOTE: At this point in the meeting, the evaluation methodology was modified to use a hybrid approach following the logic of the Kepner-Tregoe evaluation methods, but without formal numerical weighting of criteria and alternatives scoring. This change was instituted as a means of conserving time, since it was found that the formal numerical scoring would require more time to complete than time available.

C.1.7.2 Soil Conveying (To Transport Containers)

Conveyors were determined to be best for moving excavated soils from the working face to transport containers. Criteria for consideration included:

- Compatibility with field measurements/sorting (WANT)

- No vehicles moving in/out of containment building that must be deconned (MUST)

- Speed (MUST)

- Minimum re-handling (WANT)

- Simplicity (WANT)

- Availability (WANT).

Conveyors were judged to satisfy all considerations; therefore, other options were not identified.

The concept envisions portable conveyors equipped with feed hoppers starting at the excavation face. The loader would load into the hopper which would feed the belt at a uniform rate. The hopper would be equipped with a coarse grizzly to screen out oversize boulders. The oversize material (a small percentage of excavated soil) would roll off the grizzly to be picked up separately and transported out of the containment zone via separate containers. The conveyor provides the ability to mount radiation or other detection devices to allow segregation of soils by contaminant levels.

C.1.7.3 Structure and Buried Waste Excavation/Demolition

This category of excavation requires demolition of surface concrete structures such as retention basins and underground structures such as cribs and concrete burial vaults. Also included in this category are waste forms in the burial grounds such as drums, boxes (wood and cardboard), failed equipment, construction debris, miscellaneous metal shapes, and general trash. This category is distinct from soils in that the excavator must be capable of demolishing structures or oversize pieces and either removing them directly or reducing them to a form where soil excavation equipment can then remove the size-reduced pieces.

The criteria for excavating this category of waste is essentially the same as soil, and the wheel loader was judged most suitable for handling this material but supplemented by special tools for cutting, grappling, and/or demolishing structures and larger items.

For concrete demolition, concrete crackers were judged best because they are essentially hydraulic boom-mounted devices (like backhoes) that can do the job rapidly. According the Westinghouse Hanford Company engineering study (Gustafson 1990), concrete crackers can crush reinforced concrete and separate out rebar and steel beams. Special cutting knives can also be attached to cut the rebar while crushing the concrete. Detailed knowledge regarding crackers was not available, therefore these were targeted for further investigation. Wrecking balls were discussed but not highly regarded because of high booms and slow speeds. Water jet cutting was judged too slow for the volume of demolition required in the 100 Areas. Water jets also present the potential problems of secondary waste generation and potential contaminant mobilization.

Conceptually, other specialized tools that would be available at the excavation sites would be mobile shears for cutting steel, grapples for handling large shapes, and backhoes for excavating where more precise control was needed such as removing soil near structures or where the loader was not sufficiently maneuverable.

For conveying excavated buried waste and demolition debris, belt conveyors are not workable because of the variable shapes and sizes of the materials encountered. However, it is still a "must" that the conveying system be able to handle high rates of material movement. The concept for handling this material would involve the use of large sealable containers to fill inside the containment structure and transport out of the structure for

loading onto the transport system for shipping to the 200 Area. The concept envisions "boxes" of 50- to 100-yd capacity which are filled at the excavation by the loader. When filled, the containers would be closed, moved out of the structure into an airlock by a container conveyor, surface deconned in the airlock to remove contaminated surface dust, if necessary, and conveyed outside the structure where it would be either stored for later transport or moved directly via gantry crane or other device to the transport system.

So as not to slow down the excavation production, excavated material which would not fit in the transport containers would be set aside of the excavation and size-reduced separately using the special tools, i.e., crackers, shears.

C.1.7.4 Pipeline Excavation - Pipelines on Land

Buried pipelines range in diameter from 12 in. to 84 in. (most are 60-in.-diameter) and were constructed either of steel or concrete. Steel pipe represents about 85% of the total. Concrete pipelines can be excavated in the same manner as other buried concrete structures. Steel lines will require special handling, however.

Backhoes (modified with shielded cabs) were judged most suitable for the relatively narrow and shallow excavations involved in pipeline removal and satisfy all considerations including safety, ALARA, transportability, cost, availability, etc.; therefore, no other options were considered.

For removing the pipe, to maintain high rates, the concept would require rapid cutting, using as few cuts as possible to remove the pipe. Thus, cuts would only be made only to provide transportable lengths, e.g., 20 ft. To cut the pipe, several options were considered:

- Mobile shears
- Remote torches
- Remote water jet devices
- Motor-operated abrasive cutters.

The evaluation considerations included, in order of importance:

- Rate (PRIMARY MUST)
- Remote operation/shielding, ALARA (MUST)
- Ability to cut variety of diameter/wall thicknesses, i.e., size flexibility (MUST)
- Able to operate in adverse conditions, e.g., corroded pipe, collapsed pipe, pipes containing sludge
- Minimal airborne contamination, vaporization of radionuclides (WANT)

- Minimization of secondary waste generation (WANT)
- Sealable ends (weak WANT).

Although all these alternatives were judged workable against the criteria, the panel indicated a preference for mobile shears. According to the Westinghouse Hanford engineering study (Gustafson 1990), these can rapidly cut a variety of large and heavy materials including pipe. No detailed information was available to the panel, and these will be investigated further for comparison with the other alternatives. Hot cutting was not highly regarded due to the potential for volatizing contaminants. Water jet cutting was perceived as slower and produces secondary waste.

The whole concept for pipeline excavation includes the following:

- Uncover pipe, working under a smaller, narrower containment structure
- Cut pipe into transportable lengths (on-line)
- Remove pipe with grapples
- Seal the cut ends of the pipe; stack on rack or pallet
- Cover the pipe rack and convey out of containment structure through airlock to transport system
- Probe excavation for hot spots, mark and stabilize hot spots by applying Gunite
- Return later and excavate contaminated soil under a larger containment structure.

C.1.7.5 Pipeline Excavation - Pipelines Under the River

A portion of the effluent pipelines are buried in the river as effluent discharges were carried into the middle of the river. D Area pipelines are parallel 42-in.-diameter lines about 1,700 to 1,800 ft long (from the outfall structure); H Area are parallel 60-in. lines. Construction details and backfill specifications were not available to the panel.

Removal of the pipelines from the river was judged to be potentially very difficult and expensive if the surrounding sediments are contaminated. However, if the sediments are not contaminated, the panel questioned the need for removing the lines, since no threat is posed. However, if sediments are uncontaminated, line removal is fairly straightforward using conventional underwater cutting and using cranes and clamshells operated from floating barges. However, if sediments are contaminated, disturbing the sediments would no doubt mobilize contamination into the flowing current. For these reasons, the panel agreed that pre-characterization of the sediments is desirable and could be most cost-effective. Concepts for characterization

include running moles or directional drilling through the lines and/or sediments, or more conventional vertical probes operated from floating platforms.

If sediments are found to be contaminated, cofferdams would have to be built to prevent mobilization of contamination during removal of sediment and lines. It is expected that the material surrounding the lines would include fine sediments but would be mainly large cobbles and boulders.

Sediment sluicing was discussed as an alternative. Such was judged non-workable for the large size materials.

Further discussion was deferred for additional analysis and investigation of alternatives.

C.1.7.6 Containment Structures

Containment structures must be provided that prevent/minimize migration of fugitive dust to the environment from excavation or other solids handling operations.

The waste sites vary in size. Allowance must be made for excavation slope that increases the area of containment. Generally, waste site dimensions are as follows (Bauer 1991):

<100 ft on a side:	5%
100-400 ft:	65%
>400 ft:	30%.

In the 100 Areas, the widest site would be about 600 ft and the longest, more than 3,000 ft (Bauer 1991, Appendix A).

C.1.7.7 Evaluation Criteria

- Must provide adequate head space for the excavation equipment to be used
- Must be negative pressure
- Must be transportable and maneuverable to negotiate corners
- Must not be fixed, requiring foundations.

The panel accepted the Westinghouse Hanford Company evaluation as presented in Supporting Document (Bauer 1991): a crawler-mounted, bridge truss structure, with interior fabric.

The panel recommended a modification to the Westinghouse Hanford Company design so as to allow the structure to span the widest site to avoid having to make parallel excavation passes. Parallel passes were considered workable but undesirable. The structure would be positioned perpendicular to the length of the excavation; i.e., since the free span of the trusses is limited to 440 ft,

the long dimension, up to 1,000 ft, would span the width of the site. To accommodate this, adjustable, hydraulic-wheeled supports would be provided on the sides so that they can easily be raised or lowered such that the ends of the building can be on top of banks above excavation while these intermediate supports extend to the bottom of excavation. The adjustable supports would then be raised or lowered hydraulically as the structure was moved over the excavation.

At least three building sizes are desirable: 400 x 1,000 ft for large burial grounds and retention basins; a 400- x 600-ft size for smaller burial grounds; and a smaller 400- x 400-ft size for cribs, trenches, outfall structures, UPRs, and the smallest burial grounds. The buildings would have modular capability to facilitate length variations. The buildings would provide a fabric enclosure hung inside the building frame. A plastic lining could be used to facilitate decontamination. The building would be equipped with airlocks to facilitate container and equipment egress. The ventilation system with HEPA filters would be trailer mounted with flexible ducting to the containment structure.

Other types of structures were rejected: fixed structures fail the no foundation and transportability criteria. Air support structures fail the negative pressure criterion.

C.1.7.8 Dust Suppression

Although containment structures would be provided, dust suppression inside the structure would be desirable for the meet ALARA objectives, to reduce decontamination requirements, and to reduce loadings on building HEPA filters.

Considerations for dust suppression include:

- Secondary waste generation
- Effectiveness
- Impact on excavation control
- State of development
- Cost.

Water sprays would be used at the excavation face and on the floor of the excavation where equipment is moving. Dust control water would be a combination of fresh water supply and recycled decontamination waste water. Decontamination waste water could be stored in portable tanks.

Ligno-sulfate would be used on the driving surfaces for additional stabilization and control.

Vacuum hoods would be used at major material transfer points such as the fill point of conveyor hoppers.

C.1.7.8 Field Measurement Requirements and Systems

Field measurement systems must be able to rapidly determine, in real time, the general level of radiological and chemical contamination in the excavations such that determinations can be made regarding further extent of excavation, i.e., cleanup standards have been achieved. Field measurements can be confirmed with laboratory measurements, but it should be assumed that confirmations are essentially after the fact because of the length of time required for laboratory analysis.

Field measurement will also include capability to define contamination levels for purposes of waste sorting/segregation.

Although the possibility of criticality is extremely remote, in addition to radiological contamination detection, field measurement systems must also be able to detect incipient criticality situations and provide sufficient warning to allow safe evacuation and/or corrective action.

The waste sites contain numerous radionuclides in highly variable concentrations. However, the most common radionuclides to be encountered are

^{90}Sr (beta emitter)
^{60}Co (gamma emitter)
^{3}H (beta emitter)
$^{239/240}Pu$ (alpha emitter).

The majority of the chemical contamination in the 100 Areas is hexavalent chromium and nitrate, which is prevalent throughout most of the area soils. A few areas have known volatile organics: 100-H Area - PCE, 100-F Area - TCE. Polychlorinated biphenyls are known contaminants in the 100-B and 100-K areas.

Physical measurement techniques would be employed to define such parameters as location, size, and type of buried objects and depth to water. Such techniques would be employed before and during excavation to provide an advance "view" of buried objects and/or structures. It is desirable that physical methods be rapid, yielding interpreted results in real time.

Criteria for field measurement systems include:

- Adverse environment capability
- Sensitivity
- Maintenance
- Cost
- Portability
- Size/capacity
- Measurement rate
- Data output form

- Continuous/real time capability
- Range of contaminants handled.

For detection of radionuclides, the options include:

- Scintillation detectors
- Cutie Pie
- Sodium iodide detectors
- Geiger-Mueller detectors
- Pancake probes
- "FIDLER" detectors
- "Micro-R" meter
- X-ray fluorescence.

For detection of criticality, a neutron monitor is the only option. Criticality is believed to be a non-problem, but will probably have to have criticality detectors anyway.

For chemical constituents, the options include:

- Volatile organic compounds (VOC):
  - EM Flux by Quadrel Co. for soil vapor detection
  - Portable gas chromatograph
  - Photoionization detector
  - Colorimetric.
- Metals:
  - X-ray fluorescence.

For physical measurements, options include:

- Ground-penetrating radar
- Electromagnetic induction
- Magnetometer.

Alpha may not be detectable because of adverse conditions in the containment structure.

Detectors would be provided for radiation at the working excavation face, mounted on a hydraulic tractor boom. The concept envisions the operator, inside a shielded cab of the tractor, manipulating the boom and taking measurements that read out on a console inside the tractor.

- Truck transport would occur via special corridors such that U.S. Department of Transportation regulations for highway transportation would not have to be met
- All transport systems would require containment to prevent spillage or dusting of materials
- Single-use shipping containers can be considered (transport containers that are disposed with the waste materials)
- If exterior surfaces of transport vehicles become contaminated during filling or emptying, decontamination would be required prior to transport
- If surge piles are used, containment must be provided if the material is contaminated.

High-activity and low-activity soils will be segregated and shipped separately, since each will be handled and/or disposed in a different manner at the 200 Areas. Five percent of the in-place contaminated soil volume is assumed to be high activity. Other materials to be transported include large-diameter pipes and large, heavy items such as chunks of concrete with protruding rebar.

Transport criteria include:

- Speed (rate/capacity) (MUST)
- Flexibility for de-centralized waste sites (WANT)
- Transport corridor (i.e., road) safety (WANT)
- Waste form flexibility (WANT)
- Minimum of size segregation/reduction/sorting (WANT)
- ALARA (MUST)
- Decontamination ability (WANT)
- Low cost (WANT)
- Containment; e.g., covered or enclosed, no leakage during transport (MUST)
- Container integrity, withstand high impacts during loading, etc. (MUST)
- Ease of loading/unloading; dust-free filling (WANT)
- Allows for interim storage capability (WANT)
- Minimize intermediate transport modes; e.g., conveyor to truck to rail, no repackaging (WANT)

- No secondary waste (MUST)
- No vehicles in containment building (WANT)
- Standard equipment (WANT).

Alternatives considered include:

Transport:

- Rail
- Truck
- Conveyors
- Slurry lines

Containers:

- Closed hoppers on wheels for rail or truck; e.g., grain cars
- "Sea-land" boxes
- Custom made, crane moveable.

Conveyors were considered impractical because of the distance involved and the need to provide total leak-free containment including negative pressure ventilation. Also, conveyors fail on waste form flexibility, since they can only transport bulk soils. All other waste forms will require containers.

Slurry pipelines were rejected because they generate secondary waste and cannot handle soils containing large rocks.

Truck shipping scored low on safety and ALARA.

Open-top dump trucks fail on containment; closed hopper-type systems are preferred, but modification of bottom-dump mechanisms would be required to assure against leakage.

Rail shipping is preferred; scores higher on safety/ALARA.

Rail hopper cars could handle soils but might pose difficulties in that conveyors would have to be moved around constantly to accommodate car filling at a fixed location, i.e., it is preferred that the shipping containers are able to be moved rather than the conveyor systems. For this reason, crane or forklift moveable containers are preferred that would be transported on rail flatbed cars; for soils a crane-moveable, closed hopper should be considered.

For non-soils, box-type containers are preferred, since they are compatible with excavation concepts and with flatbed rail shipping. "Sea-land" boxes are inexpensive but likely will not have the necessary structural

integrity. The preferred concept would use a gantry crane or forklift moveable, strong, custom-made containers. Container development would be necessary.

For high-activity materials, smaller shielded containers would be used such as "Sure-Pak" containers. Such containers might be single use, i.e., disposed of along with the contained waste.

The operating concept is described as follows:

- For low-activity soils, load custom-made hopper-type containers immediately adjacent to containment structure via conveyors/hoppers/chutes; move containers to rail flatbed cars with rubber-tired gantry crane

- Non-soil waste and high-activity soils would be loaded into their respective containers inside the containment structure; containers are conveyed to an airlock and deconned before exiting the building; once outside the building, the containers are set into temporary storage for movement to railcars via gantry crane

- Large-diameter pipes would be loaded on a rack or pallets; moved into the airlock and covered with plastic, exposed rack or pallet is deconned; rack is moved outside the building for temporary storage then moved to railcars via gantry crane

- The concept envisions that shipping containers provide interim storage; surge piles are to be avoided with exception of uncontaminated soil, which does not have to be covered.

C.1.7.13 Site Restoration

Site restoration must be accomplished consistent with land use options that are currently undecided:

- General use, which includes residential, agricultural, commercial

- Industrial use

- Wetlands, which assumes maintaining the area as a wildlife preserve.

Restoration alternatives include:

- Total reclamation, including backfilling all excavations to original contours and revegetation with natural species

- Recontour the site to fill excavations but not maintain original contours; revegetate with natural species

- Leave excavations as-is to create artificial wetlands; revegetate with natural species.

The discussion concluded that recontouring does not preclude general or industrial use, and there is no net benefit of total restoration to original contours; therefore, the total reclamation alternative was dropped.

The preferred approach is to recontour to lessen steep slopes at the excavation sites, import only topsoil if necessary to support revegetation, and then revegetate to stabilize soil against erosion. Revegetation envisions planting native grasses and providing irrigation to initiate growth.

The wetlands scenario would import only enough topsoil to support revegetation. Native grasses would be planted and irrigated to establish stable initial growth. The wetland scenario is probably not feasible unless artificial canals are dug to the river or other means of artificial recharge are provided. Such is perceived to have an unattractive cost/benefit ratio.

C.1.8 INDUSTRIAL USE OPTION

The industrial use scenario was discussed in the context of identifying possible general deviations from the general use scheme. The only net difference between the two use scenarios is the volume of soil to be excavated. That is, since the industrial use cleanup levels are less stringent, excavation can be terminated at shallower depths. However, in the macroengineering approach, since sites are not pre-characterized, overburden removal would be essentially the same. That is, the excavation would have to proceed far enough in all cases to reach the contamination to determine whether and how much soil would have to be removed below a waste site. The industrial use option assumes that all buried waste, pipelines, and structures would have to be removed from the site, the same as for the general use option.

The methodology and approach for the industrial use option would not change.

C.1.9 PLANS FOR FURTHER EVALUATION

This portion of the meeting concluded the initial evaluation and selection of alternatives. A number of areas were identified throughout the course of the discussions where further study is needed to further define and evaluate equipment systems. Specific assignments made to team members for further investigation and analysis.

C.1.10 REFERENCES

Adams, J. A., P. W. Griffin, M. C. Hughes, and D. K. Tyler, 1984, *Hanford 100 Area Long-Range Decommissioning Plan*, UNI-2533, United Nuclear Industries, Inc., Richland, Washington.

Bauer, R. G., 1991, *Containment Alternatives for Contaminated Soil Excavation*, WHC-SD-EN-ES-011, Rev. 0, Westinghouse Hanford Company, Richland, Washington.

Daugbjerg, R. J., 1980, Keppner-Tregoe, Inc., "Is There A Better Way to Make Engineering Decisions," *Chemical Engineering*, June 30, 1980.

Gustafson, F. W., and W. E. Green, 1990, *Large Scale Surface Excavation of Contaminated Waste Sites on the Hanford Reservation*, WHC-SD-EN-ES-007, Rev. 0, Westinghouse Hanford Company, Richland, Washington.

DISTRIBUTION

Number of Copies		
ONSITE		
8	U.S. Department of Energy - Richland Field Office	
	J. K. Erickson	A5-19
	J. D. Goodenough	A5-19
	E. D. Goller	A5-19
	A. C. Harris	A5-19
	P. M. Pak	A5-19
	R. K. Stewart	A5-19
	K. M. Thompson	A5-15
	DOE-RL Public Reading Room	A1-65
1	Pacific Northwest Laboratory	
	PNL Technical Files	K1-11
9	Westinghouse Hanford Company	
	M. R. Adams	H4-55
	M. S. Andrews	H4-17
	M. J. Lauterbach	H4-55
	F. V. Roeck	H4-55
	T. M. Wintczak	L4-92
	Central Files	L8-04
	Document Processing and Distribution (2)	L8-15
	Information Release Administration	H4-17

THIS PAGE INTENTIONALLY
LEFT BLANK