0022128

WHC-EP-0539
Revision 1

UC-620

Regulatory Analysis of the Underground Storage Tank - Integrated Demonstration Program

E. H. Smith
Westinghouse Hanford Company

Date Published
July 1992

JUL 1992
RECEIVED
EDMC

Prepared for the U.S. Department of Energy
Office of Environmental Restoration and
Waste Management

Westinghouse Hanford Company
P.O. Box 1970
Richland, Washington 99352

Hanford Operations and Engineering Contractor for the
U.S. Department of Energy under Contract DE-AC06-87RL10930

Approved for Public Release

Date Received 5-28-92 ew

INFORMATION RELEASE REQUEST ORIGINAL

Reference: WHC-CM-3-4

Complete for all Types of Release

Purpose

- ☐ Speech or Presentation
  - ☐ Full Paper
  - ☐ Summary
  - ☐ Abstract
  - ☐ Visual Aid
  - (Check only one suffix)
- ☐ Speakers Bureau
- ☐ Poster Session
- ☐ Videotape
- ☐ Reference
- ☒ Technical Report
- ☐ Thesis or Dissertation
- ☐ Manual
- ☐ Brochure/Flier
- ☐ Software/Database
- ☐ Controlled Document
- ☐ Other _____

ID Number (include revision, volume, etc.): WHC-EP-0539 Rev. 1

List attachments.

Date Release Required: 6/10/92

Title: REGULATORY ANALYSIS OF THE UNDERGROUND STORAGE TANK INTEGRATED DEMONSTRATION PROGRAM

Unclassified Category: UC-

Impact Level:

New or novel (patentable) subject matter? ☒ No ☐ Yes
If "Yes", has disclosure been submitted by WHC or other company?
☐ No ☐ Yes Disclosure No(s). _____

Information received from others in confidence, such as proprietary data, trade secrets, and/or inventions?
☒ No ☐ Yes (Identify)

Copyrights? ☒ No ☐ Yes
If "Yes", has written permission been granted?
☐ No ☐ Yes (Attach Permission)

Trademarks?
☒ No ☐ Yes (Identify)

Complete for Speech or Presentation

Title of Conference or Meeting: N/A

Group or Society Sponsoring: N/A

Date(s) of Conference or Meeting

City/State

Will proceedings be published? ☐ Yes ☒ No
Will material be handed out? ☐ Yes ☒ No

Title of Journal

CHECKLIST FOR SIGNATORIES

Review Required per WHC-CM-3-4	Yes	No	Reviewer - Signature Indicates Approval: Name (printed)	Signature	Date
Classification/Unclassified Controlled Nuclear Information	☐	☒			
Patent-General Counsel	☒	☐	S.W. Berglin	SWBerglin	5/29/92
Legal-General Counsel	☒	☐	B.D. Williamson	BDWilliamson	7/3/92
Applied Technology/Export Controlled Information or International Program	☐	☒			
WHC Program/Project	☒	☐	for J.D. Berger	JCWoomb	6/2/92
Communications	☐	☒			
RL Program/Project	☒	☐	P.K. Clark	R.P. Cate, for	7/9/92
Publications Services	☒	☐	A.F. Waite	AFWaite	7/13/92
Other Program/Project	☐	☐			

Information conforms to all applicable requirements. The above information is certified to be correct.

	Yes	No
References Available to Intended Audience	☒	☐
Transmit to DOE-HQ/Office of Scientific and Technical Information	☒	☐

Author/Requestor (Printed/Signature) Date

EDWARD H. SMITH Edward H. Smith 5/22/92

Intended Audience

☐ Internal ☐ Sponsor ☒ External

Responsible Manager (Printed/Signature) Date

R.J. Landon Roger J. Landon 5/22/92

INFORMATION RELEASE ADMINISTRATION APPROVAL STAMP

Stamp is required before release. Release is contingent upon resolution of mandatory comments.

APPROVED FOR RELEASE
OFFICIAL DOCUMENT
ew
Date 7-13-92

Date Cancelled

Date Disapproved

BD-7600-062 (08/91)
Part 1

LEGAL DISCLAIMER

This report was prepared as an account of work sponsored by an agency of the United States Government. Neither the United States Government nor any agency thereof, nor any of their employees, nor any of their contractors, subcontractors or their employees, makes any warranty, express or implied, or assumes any legal liability or responsibility for the accuracy, completeness, or any third party's use or the results of such use of any information, apparatus, product, or process disclosed, or represents that its use would not infringe privately owned rights. Reference herein to any specific commercial product, process, or service by trade name, trademark, manufacturer, or otherwise, does not necessarily constitute or imply its endorsement, recommendation, or favoring by the United States Government or any agency thereof or its contractors or subcontractors. The views and opinions of authors expressed herein do not necessarily state or reflect those of the United States Government or any agency thereof.

This report has been reproduced from the best available copy. Available in paper copy and microfiche.

Available to the U.S. Department of Energy
and its contractors from
Office of Scientific and Technical Information
P.O. Box 62
Oak Ridge, TN 37831
(615) 576-8401

Available to the public from the U.S. Department of Commerce
National Technical Information Service
5285 Port Royal Road
Springfield, VA 22161
(703) 487-4650

Printed in the United States of America

DISCLM-1.CHP (1-91)

Document Title: Regulatory Analysis of the Underground Storage Tank-Integrated Demonstration Program

Prepared by: Edward H Smith — 6/8/92
E. H. Smith
Advanced Scientist
Date

Approved by: Thomas E. Gates — 6/10/92
T. E. Gates, Manager
Program Operations
Date

Approved by: Roger J. Landon — 6/9/92
R. J. Landon, Manager
Regulatory Analysis
Date

This page intentionally left blank.

REGULATORY ANALYSIS OF THE UNDERGROUND STORAGE TANK-INTEGRATED DEMONSTRATION PROGRAM

E. H. Smith

ABSTRACT

The Underground Storage Tank-Integrated Demonstration Program has been developed to identify, demonstrate, test, and evaluate technologies that will provide alternatives to the current underground storage tank remediation program. The Underground Storage Tank-Integrated Demonstration Program is a national program that consists of five participating U.S. Department of Energy sites where technologies can be developed and ultimately demonstrated. Once these technologies are demonstrated, the Underground Storage Tank-Integrated Demonstration Program will transfer the developed technology system to industry (governmental or industrial) for application or back to Research and Development for further evaluation and modification, as necessary.

In order to ensure that the Underground Storage Tank-Integrated Demonstration Program proceeds without interruption, it will be necessary to identify regulatory requirements along with associated permitting and notification requirements early in the technology development process. This document serves as a baseline for identifying certain federal regulatory requirements that may impact the Underground Storage Tank-Integrated Demonstration Program and the demonstration of any identified technologies.

Included in this assessment is a summary of the National Environmental Policy Act of 1969[1], *the Clean Air Act of 1977*[2], *the Resource Conservation and Recovery Act of 1976*[3], *the Clean Water Act of 1977*[4], *certain DOE orders, and the Comprehensive Environmental Response, Compensation, and Liability Act of 1980*[5]. *In addition, this document provides a brief discussion of how each of these requirements will impact the Underground Storage Tank-Integrated Demonstration Program.*

In order to ensure that state regulatory requirements are addressed, in addition to the federal regulatory requirements, this document has been expanded to include an evaluation of state regulatory requirements associated with each of the five participating U.S. Department of Energy sites. This information is included in this revision to the federal regulatory requirements baseline document. This information will be transmitted to each of the participating U.S. Department of Energy sites to ensure that both federal and state regulatory requirements are identified and addressed as appropriate.

---

[1]National Environmental Policy Act of 1969, 42 USC 4321, et seq.

[2]Clean Air Act of 1977, 42 USC 7401, et seq.

[3]Resource Conservation and Recovery Act of 1976, 42 USC 6901, et seq.

[4]Clean Water Act of 1977, 33 USC 1251, et seq.

[5]Comprehensive Environmental Response, Compensation, and Liability Act of 1980, 42 USC 9601, et seq.

CONTENTS

1.0 INTRODUCTION 1-1
1.1 PURPOSE OF DOCUMENT 1-1
1.2 BACKGROUND 1-3
1.2.1 Overview of the Underground Storage Tank-Integrated Demonstration Program 1-3
1.2.2 Development of Technical Support Groups 1-3

2.0 NATIONAL ENVIRONMENTAL POLICY ACT OF 1969 2-1
2.1 BACKGROUND 2-1
2.2 EXISTING NATIONAL ENVIRONMENTAL POLICY ACT OF 1969 DOCUMENTATION REVIEW 2-1
2.3 CATEGORICAL EXCLUSION AND INFORMATION BULLETIN 2-1
2.4 ACTION DESCRIPTION MEMORANDUM 2-2
2.5 ENVIRONMENTAL ASSESSMENT 2-2
2.6 ENVIRONMENTAL IMPACT STATEMENT 2-3
2.7 IMPACTS TO THE UNDERGROUND STORAGE TANK-INTEGRATED DEMONSTRATION PROGRAM 2-4

3.0 CLEAN AIR ACT OF 1977 3-1
3.1 BACKGROUND 3-1
3.2 NEW SOURCE PERFORMANCE STANDARDS 3-1
3.3 NATIONAL EMISSION STANDARDS FOR HAZARDOUS AIR POLLUTANTS . . 3-1
3.3.1 Application for Approval of Construction or Modification 3-2
3.3.2 Approval of Construction or Modification 3-2
3.4 IMPACTS TO THE UNDERGROUND STORAGE TANK-INTEGRATED DEMONSTRATION PROGRAM 3-3

4.0 RESOURCE CONSERVATION AND RECOVERY ACT OF 1976 4-1
4.1 BACKGROUND 4-1
4.2 IDENTIFICATION OF HAZARDOUS WASTE 4-1
4.3 SAMPLE EXCLUSION 4-2
4.4 TREATABILITY STUDY SAMPLE EXCLUSION 4-3
4.4.1 Limitations on Treatability Studies 4-3
4.4.2 Quantity Limits per Waste Stream per Treatment Process 4-3
4.4.3 Transportation Shipment Limits 4-4
4.4.4 Treatment Rate Limit 4-5
4.4.5 Storage Limits 4-5
4.4.6 Residues and Unused Samples 4-5
4.4.7 Reporting and Recordkeeping Requirements 4-5
4.5 RESEARCH DEVELOPMENT AND DEMONSTRATION PERMITS 4-5
4.6 GENERATOR AND TRANSPORTER STANDARDS 4-7
4.7 LAND DISPOSAL RESTRICTIONS 4-7
4.8 TREATMENT, STORAGE, AND DISPOSAL FACILITIES 4-8
4.9 TREATMENT AND STORAGE TANK TECHNICAL STANDARDS 4-9
4.9.1 Design and Installation of New Tank Systems 4-9
4.9.2 Containment and Detection of Releases 4-10
4.9.3 General Operating Requirements 4-10
4.9.4 Response to Leaks or Spills 4-11
4.10 TREATMENT AND STORAGE TANK CLOSURE OPTIONS 4-11

CONTENTS (cont)

4.10.1 Closure as a Treatment and Storage Tank 4-11
4.10.2 Closure as a Landfill 4-12
4.10.3 Closure as a Miscellaneous Unit 4-12
4.11 IMPACTS TO THE UNDERGROUND STORAGE TANK-INTEGRATED DEMONSTRATION PROGRAM 4-13

5.0 CLEAN WATER ACT OF 1977 5-1
5.1 BACKGROUND 5-1
5.2 WASTEWATER DISCHARGES THROUGH A NATIONAL POLLUTANT DISCHARGE ELIMINATION SYSTEM 5-1
5.2.1 Permitting Requirements 5-1
5.3 WASTEWATER DISCHARGES TO A PUBLICLY OWNED TREATMENT WORKS . . 5-2
5.3.1 Pretreatment Permits 5-2
5.4 IMPACTS TO THE UNDERGROUND STORAGE TANK-INTEGRATED DEMONSTRATION PROGRAM 5-3

6.0 U.S. DEPARTMENT OF ENERGY ORDERS 6-1
6.1 BACKGROUND 6-1
6.2 DOE ORDER 5400.1 6-1
6.3 DOE ORDER 5400.5 6-1
6.4 DOE ORDER 5480.3 6-1
6.5 DOE ORDER 5480.11 6-2
6.6 DOE ORDER 5820.2A 6-2
6.6.1 Management of High-Level Waste 6-3
6.6.2 Management of Transuranic Waste 6-3
6.6.3 Management of Low-Level Waste 6-4
6.7 DOE ORDER 6430.1A 6-4
6.8 IMPACTS TO THE UNDERGROUND STORAGE TANK-INTEGRATED DEMONSTRATION PROGRAM 6-4

7.0 RESOURCE CONSERVATION AND RECOVERY ACT CORRECTIVE ACTION 7-1
7.1 BACKGROUND 7-1
7.2 THE CORRECTIVE ACTION PROCESS 7-1
7.3 REGULATED CONSTITUENTS 7-3
7.4 CLEANUP REQUIREMENTS 7-3
7.5 DEMONSTRATION OF TECHNICAL IMPRACTICABILITY 7-3
7.6 CONDITIONAL REMEDIES 7-4
7.7 MANAGEMENT OF CLOSURE DERIVED WASTE 7-4
7.8 IMPACTS TO THE UNDERGROUND STORAGE TANK-INTEGRATED DEMONSTRATION PROGRAM 7-4

8.0 COMPREHENSIVE ENVIRONMENTAL RESPONSE, COMPENSATION, AND LIABILITY ACT OF 1980 8-1
8.1 BACKGROUND 8-1
8.2 NATIONAL CONTINGENCY PLAN 8-1
8.2.1 Applicable or Relevant and Appropriate Requirements 8-2
8.2.2 Administrative versus Substantive Requirements 8-3
8.2.3 Waiver From Applicable or Relevant and Appropriate Requirements 8-3
8.2.4 Treatability Studies 8-4

CONTENTS (cont)

8.3 RELEASE REPORTING REQUIREMENTS 8-5
8.4 IMPACTS TO THE UNDERGROUND STORAGE TANK-INTEGRATED DEMONSTRATION PROGRAM 8-6

9.0 REFERENCES 9-1
9.1 CODE OF FEDERAL REGULATIONS 9-1
9.2 PUBLIC LAWS 9-2
9.3 U.S. DEPARTMENT OF ENERGY ORDERS 9-2
9.4 DOCUMENTS 9-3
9.5 FEDERAL REGISTER 9-3

APPENDIX:
A. WASHINGTON STATE REGULATORY REQUIREMENTS A-1

LIST OF FIGURES

1 Overview of the *National Environmental Policy Act of 1969* Decision-Making Process 2-5

2 Comparison of *Resource Conservation and Recovery Act of 1976* Corrective Action and Comprehensive Environmental Response, Compensation, and Liability Act of 1980 Remedial Processes 7-2

LIST OF TABLES

1 Federal Permits and Approvals Potentially Applicable to the Underground Storage Tank-Integrated Demonstration Program 1-2

LIST OF TERMS

ADM	action description memorandum
AEA	*Atomic Energy Act of 1954*
ALAR	applicable, relevant, and appropriate requirements
ALARA	as low as reasonably achievable
BDAT	best demonstrated available technology
CAA	*Clean Air Act of 1977*
CAMU	corrective action management unit
CEQ	Council on Environmental Quality
CERCLA	*Comprehensive Environmental Response, Compensation, and Liability Act of 1980*
CFR	*Code of Federal Regulations*
CMS	Corrective Measures Study
CWA	*Clean Water Act of 1977*
DOE	U.S. Department of Energy
DOE-HQ	U.S. Department of Energy-Headquarters
DOT	U.S. Department of Transportation
EA	environmental assessment
EDE	effective dose equivalent
EIS	environmental impact statement
EPA	U.S. Environmental Protection Agency
FONSI	finding of no significant impact
FR	*Federal Register*
FS	feasibility study
HLW	high-level waste
HRS	Hazard Ranking System
HSWA	*Hazardous and Solid Waste Amendments of 1984*
LDR	land disposal restrictions
LEPC	Local Emergency Planning Committee
LLW	low-level waste
NCP	National Contingency Plan
NEPA	*National Environmental Policy Act of 1969*
NOI	notice of intent
NPDES	National Pollutant Discharge Elimination System
NPL	National Priorities List
NRC	National Response Center
PA/SI	Preliminary Assessment/Site Investigation
POTW	publicly owned treatment works
RCRA	*Resource Conservation and Recovery Act of 1976*
RD&D	research, development, and demonstration
RFA	RCRA Facility Assessment
RFI	RCRA Facility Investigation
RI	Remedial Investigation
RMW	radioactive mixed waste
RQ	reportable quantity
SERC	State Emergency Response Commission
SWMU	solid waste management unit
TOC	total organic carbon
TRU	transuranic

LIST OF TERMS (cont)

TSD	treatment, storage, or disposal
TSG	technical support group
USPS	U.S. Postal Service
UST-ID	Underground Storage Tank-Integrated Demonstration
WIPP	Waste Isolation Pilot Plant

Metric Conversion Chart

English units	Multiply By	Equals
Length		
inches	2.54	centimeters
feet	0.3048	meters
miles	1.6093	kilometers
Volume		
gallons	3.786	liters

REGULATORY ANALYSIS OF THE UNDERGROUND STORAGE TANK-INTEGRATED DEMONSTRATION PROGRAM

1.0 INTRODUCTION

This document provides a review of environmental protection regulations and other requirements that may impact the Underground Storage Tank-Integrated Demonstration (UST-ID) Program. As this program is initiated, a number of regulatory requirements will be identified that must be addressed. This information will be utilized to guide the development, selection, testing, and evaluations of technologies to be used in the UST-ID system by defining the expected working environments within which the technologies must be functional.

1.1 PURPOSE OF DOCUMENT

This document provides an overview of the major environmental regulations that may impact the UST-ID Program. Regulatory requirements most often define performance standards that waste management technologies must meet to be accepted by the regulatory authorities. The development of new technologies for the management of hazardous waste will require an in-depth analysis of potentially applicable regulations to ensure that a chosen technology can meet applicable performance standards. In addition, identification of regulatory requirements early in the development phase will ensure that all necessary permits and notifications for the subsequent management of hazardous waste are secured without delays to the UST-ID Program.

This document provides an evaluation of environmental regulatory requirements that may impact development of technologies associated with the UST-ID Program. As discussed above, regulatory requirements, in some cases, establish performance-based criteria that a specified technology must meet when used for the treatment, storage, or disposal (TSD) of hazardous waste. In addition, it may be necessary to obtain permits from the regulatory authorities to use a developed technology before constructing facilities or testing a desired technology. These types of potential impacts to the UST-ID Program require early identification so that the long-term goal of tank waste remediation and technology development can proceed without long-term delays.

This document has been developed to identify the major federal environmental regulatory requirements that may impact the UST-ID Program. Five appendixes have been attached, which identify state-only environmental regulations that are more restrictive than their corresponding federal regulations. The state regulatory programs that have been chosen for analysis correspond to each of the five U.S. Department of Energy (DOE) sites participating in the UST-ID Program. These sites include the Hanford Site, Idaho National Engineering Laboratory, Oak Ridge National Laboratories, Savannah River Site, and the Feed Material Production Center at Fernald. This

approach will allow a person involved in technology development and demonstration activities to have access to environmental regulatory information for any DOE site involved in the UST-ID Program.

Table 1 has been prepared to summarize the federal environmental regulations that are expected to have the greatest impact to the UST-ID Program. This table allows easy identification of major federal environmental regulations, along with the activity (e.g., air emission or wastewater discharge) covered by the associated regulation. By reviewing this table, a person involved in technology development activities can make preliminary determinations regarding the applicability of a particular regulation. For example, if a project will not generate a wastewater stream, those regulations applicable to such activities can be eliminated from the evaluation process. Where additional information is needed, the appropriate section of this document should be consulted for additional detail. Where a regulation is determined to be applicable, the corresponding state-only regulations should be evaluated to ensure that more restrictive state-only regulations are addressed.

Table 1. Federal Permits and Approvals Potentially Applicable to the Underground Storage Tank-Integrated Demonstration Program.

Activity	Permit or approval	Regulation*	Regulatory agency	Restriction
Air emissions.	NESHAP Permit	40 CFR Part 61, Subpart H	EPA	Construction, remediation
Assessment of environmental impacts	EA or EIS	40 CFR 1500 - 1508	DOE	Construction
Hazardous waste management	Hazardous Waste Permit (Part A and Part B)	40 CFR 260 - 268, 40 CFR 270	EPA	Construction/ operation
Surface wastewater disposal	NPDES Permit	40 CFR 122	EPA	Operation
Domestic wastewater disposal	Wastewater Pretreatment Permit	40 CFR 403	EPA	Discharges to a POTW
RCRA corrective action	Hazardous Waste Permit (Part B)	40 CFR 264, Subpart S (Proposed Rule)	EPA	Corrective action of past practice unit
CERCLA remedial action	Record of Decision	40 CFR 300, Subpart E	EPA	Remediation of past practice unit

CERCLA = Comprehensive Environmental Response, Compensation and Liability Act of 1980
CFR = Code of Federal Regulations
DOE = U.S. Department of Energy
EA = Environmental assessment
EIS = Environmental Impact Statement
EPA = U.S. Environmental Protection Agency
NESHAP = National Emission Standard for Hazardous Air Pollutants
NPDES = National Pollutant Discharge Elimination System
POTW = Publicly Owned Treatment Works
RCRA = Resource Conservation and Recovery Act of 1976
*See References in Section 9.0.

1.2 BACKGROUND

National defense activities have generated radioactive and chemical wastes since 1944. These wastes have been stored in underground storage tanks at a number of DOE sites. Removal and treatment of this type of waste present a unique and complex problem for DOE sites that will eventually remediate or close these tanks in accordance with hazardous waste regulations established under the *Resource Conservation and Recovery Act of 1976* (RCRA). In addition to addressing the chemical component of the waste, these sites are also required to address the radioactive components, which are regulated under the *Atomic Energy Act of 1954*. Thus, radioactive mixed waste (RMW) is subject to dual regulation by two separate federal regulatory authorities and authorized states.

1.2.1 Overview of the Underground Storage Tank-Integrated Demonstration Program

The objective of the UST-ID Program is to identify; direct the development of; and demonstrate, test, and evaluate advanced technologies that will provide alternatives to the current technology baseline for underground storage tank and tank content remediation. The UST-ID Program will stimulate technology development where voids exist and combine and demonstrate technologies within a given system. Once demonstrated, the UST-ID Program will transfer technologies and technology systems out to industry (government or commercial) for application or back to research and development for further development.

This program is expected to reduce overall costs by identifying potential regulatory issues early in the developmental stage. This should allow adequate time for resolving issues before program schedules are impacted. Finally, this program has been designed to provide a safer way to demonstrate tank waste remediation and closure technologies while reducing personnel radiation exposures to as low as reasonably achievable (ALARA).

1.2.2 Development of Technical Support Groups

The UST-ID Program will be subdivided into eight technical support groups (TSG). The TSGs will identify those technologies that are determined to warrant further research and development to support the UST-ID and/or the DOE Office of Technology Development. The TSGs and their associated responsibilities include the following:

- **Waste Characterization**--The waste characterization TSG will include analyses of radioactive, chemical, and mixed waste throughout all phases (e.g., retrieval, processing, disposal) of the demonstration. Activities include in situ, onsite, and laboratory analyses.

- **Waste Retrieval, Transfer, and Storage**--The retrieval, transfer, and temporary storage of tank waste will be addressed by this TSG. Technical areas will include the following technologies: dislodging

(hydraulic, pneumatic, mechanical), robotics systems and controls, conveyance, and transport mechanisms for both in-tank transfers and transfers to storage and/or processing facilities.

- **Soil and Past-Practice Unit Remediation**--All ancillary equipment, diverter boxes, catch basins, soil contaminated from spills, and miscellaneous equipment external to the tank will be covered by this group.

- **Waste Separation (High-Level/Low-Level/Transuranic/Hazardous)**--This TSG will cover processes for the separation of retrieved tank wastes into categories of treatment/disposal interests. These categories include high-level waste (HLW), low-level waste (LLW), transuranic (TRU) waste, and hazardous waste.

- **Tank HLW Treatment/Disposal (including TRU)**--Treatment and disposal of the HLW (e.g., cesium and strontium) and TRU fractions of retrieved waste will be addressed by this TSG.

- **Tank LLW Treatment/Disposal (including Hazardous)**--Treatment and disposal processes for the LLW and hazardous fractions of the retrieved waste will be addressed by this TSG.

- **In Situ Treatment**--This TSD will cover in situ treatment and disposal options for the tank waste, tank structure, piping, in-tank equipment, and contaminated soil/groundwater.

- **Site Closure**--The site closure TSG will include technical and regulatory considerations surrounding potential site closure options, including surface and subsurface permanent barriers and in situ remediation to total retrieval of all waste, tanks, and soil.

2.0 NATIONAL ENVIRONMENTAL POLICY ACT OF 1969

2.1 BACKGROUND

The *National Environmental Policy Act of 1969* (NEPA) was signed into law on January 1, 1970. This law requires federal agencies to prepare detailed statements (i.e., environmental impact statements [EIS]) assessing the environmental impacts of and alternatives to proposed major federal actions that may significantly affect the environment. In addition, all federal agencies are required to develop methods and procedures to ensure that environmental considerations are factored into all decision-making processes. The Council on Environmental Quality (CEQ) provides oversight to federal NEPA compliance issues and has established implementing NEPA regulations at 40 *Code of Federal Regulations* (CFR) Parts 1500 through 1508.

2.2 EXISTING NATIONAL ENVIRONMENTAL POLICY ACT OF 1969 DOCUMENTATION REVIEW

For any proposed action associated with the UST-ID Program, the cognizant manager should evaluate existing NEPA documentation, where available, to determine whether or not the action in question has already been addressed from a NEPA perspective. If NEPA documentation has already been prepared and approved for the action in question, the cognizant manager should prepare a letter of transmittal to the representing DOE Field Office documenting that additional NEPA documentation is not warranted. The approved NEPA documentation should be in the form of an environmental assessment (EA) or an EIS.

2.3 CATEGORICAL EXCLUSION AND INFORMATION BULLETIN

In the event that a proposed action has not been addressed by previous NEPA documentation, the proposed action will require a NEPA evaluation. If the potential impacts to the environment are clearly insignificant and the proposed action falls within a category of actions that do not normally require an EA or an EIS, the action may be eligible for a categorical exclusion. If the proposed action meets the criteria for a categorical exclusion, then an information bulletin (IB) is prepared describing the proposed action and identifying the applicable action category that allows the exclusion. In general, a typical IB may include the following information: (1) a summary of the proposed action and its background, (2) a justification of why the action may be categorically excluded, and (3) a discussion of associated environmental impacts involved with the proposed action.

On May 24, 1992, the DOE issued a final rule in the *Federal Register* (FR) (57 FR 80, p. 15122) identifying activities for which categorical exclusions have been established. Among others, the following types of activities have been identified:

- Site characterization and environmental monitoring activities, including those associated with remedial investigation and feasibility studies

- Indoor bench-scale research projects and conventional operation of laboratories, provided the proposed action does not threaten a violation of applicable permit requirements and the proposed action is performed in existing laboratory facilities

- Research and development activities, small scale testing at existing facilities and preceding demonstrations--This exclusion is limited to small-scale research and development projects and small-scale pilot projects that generally last less than 2 years in duration

- *Comprehensive Environmental Response, Compensation, and Liability Act of 1980* (CERCLA) removals and similar actions under RCRA or other authorities, provided the activity meets CERCLA regulatory time and cost limits.

2.4 ACTION DESCRIPTION MEMORANDUM

In the event that a proposed action does not fall within a category of actions that may be categorically excluded, an action description memorandum (ADM) must be prepared. The ADM serves as the basis for the U.S. Department of Energy-Headquarters (DOE-HQ) to determine the appropriate level of NEPA documentation required (i.e., an EA or EIS).

Action description memorandums are concise documents, usually consisting of three to five pages and typically including a discussion of the following information: (1) the purpose and need of the proposed action, (2) a brief but concise description of the proposed action, (3) a brief description of the potentially affected environment, and (4) potential environmental issues associated with the proposed action.

2.5 ENVIRONMENTAL ASSESSMENT

In the event that an EA is deemed necessary, the DOE Field Office supporting the proposed action will be required to develop an EA in accordance with CEQ regulations. An EA has the following three defined functions:

- To provide sufficient information to allow the DOE to determine whether a proposed action requires preparation of an EIS or a finding of no significant impact (FONSI)

- To provide an interdisciplinary review of the proposed action and alternatives to the proposed action

- To facilitate preparation of an EIS when one is necessary.

A typical EA should include a discussion of the following information: (1) a statement of purpose and the need for the proposed action, (2) a clear and concise description of the proposed action, (3) a description of alternatives to the proposed action, and (4) a description of the existing environment expected to be impacted by the proposed action. An assessment of the environmental consequences associated with a proposed action and alternatives to that action should be discussed in the EA. The discussion

should include the consequences of accidents and routine operations along with the cumulative and long-term impacts associated with the proposed action.

All EAs are submitted to the associated DOE Field Office for review, with subsequent transmittal to DOE-HQ. At DOE-HQ, a final determination will be made by the Assistant Secretary for Environment, Safety and Health. This determination will result in one of the following.

- If the proposed action is a major action that will significantly affect the environment, an EIS must be prepared.
- If the proposed action is not a major action and will not significantly affect the environment, a FONSI is prepared.

In most cases, a FONSI will be issued to the associated Field Office indicating approval for the action in question. However, DOE-HQ may determine that a FONSI warrants publication in the FR. A determination of this type may be made where a given action and associated EA are highly controversial or where an EA is of very broad scope and clarification is required.

2.6 ENVIRONMENTAL IMPACT STATEMENT

According to CEQ regulations, an EIS should be no more than 300 pages long and include an analysis of alternatives, affected environment, etc. The EIS is very similar to the EA, but includes considerably more detail. When DOE has decided to draft an EIS, the following sequence occurs.

1. A notice of intent (NOI) is published in the *Federal Register* announcing the intent to draft an EIS. The NOI invites written comment and public testimony on the scope and purpose of the EIS.
2. As a result of scoping and other planning, an implementation plan is published. This includes a detailed outline of the EIS, target dates, and a description of how the EIS will be prepared.
3. After approval of the implementation plan, a draft EIS is prepared.
4. Upon completion of the draft EIS, the draft is made available to the public and other governmental agencies for review and comment.
5. Comments are incorporated into the draft EIS, and the EIS is finalized and made available to the public for review.
6. No sooner than 30 days after public notice of the availability of the final EIS, the DOE can publish its record of decision, which details the decisions reached in the EIS and the reasons for those decisions.

2.7 IMPACTS TO THE UNDERGROUND STORAGE TANK-INTEGRATED DEMONSTRATION PROGRAM

Recent revisions to NEPA implementation were issued through the Secretary of Energy Notice 15-90 (DOE 1990). Among other things, this notice declared that there would no longer be a catchall category of actions that would not require NEPA documentation. In other words, all activities require some form of NEPA documentation. Even activities that are categorically exempt require development and submittal of an IB. Therefore, the requirements established pursuant to the NEPA must be carefully evaluated to determine their applicability to projects or demonstrations associated with the UST-ID Program. Depending upon the type of NEPA documentation required and the extent of existing NEPA documentation associated with a given facility, development and approval of NEPA documentation can result in significant delays if adequate timing is not accounted for. An overview of the NEPA decision-making process is outlined in Figure 1.

Figure 1. Overview of the *National Environmental Policy Act of 1969* Decision-Making Process.

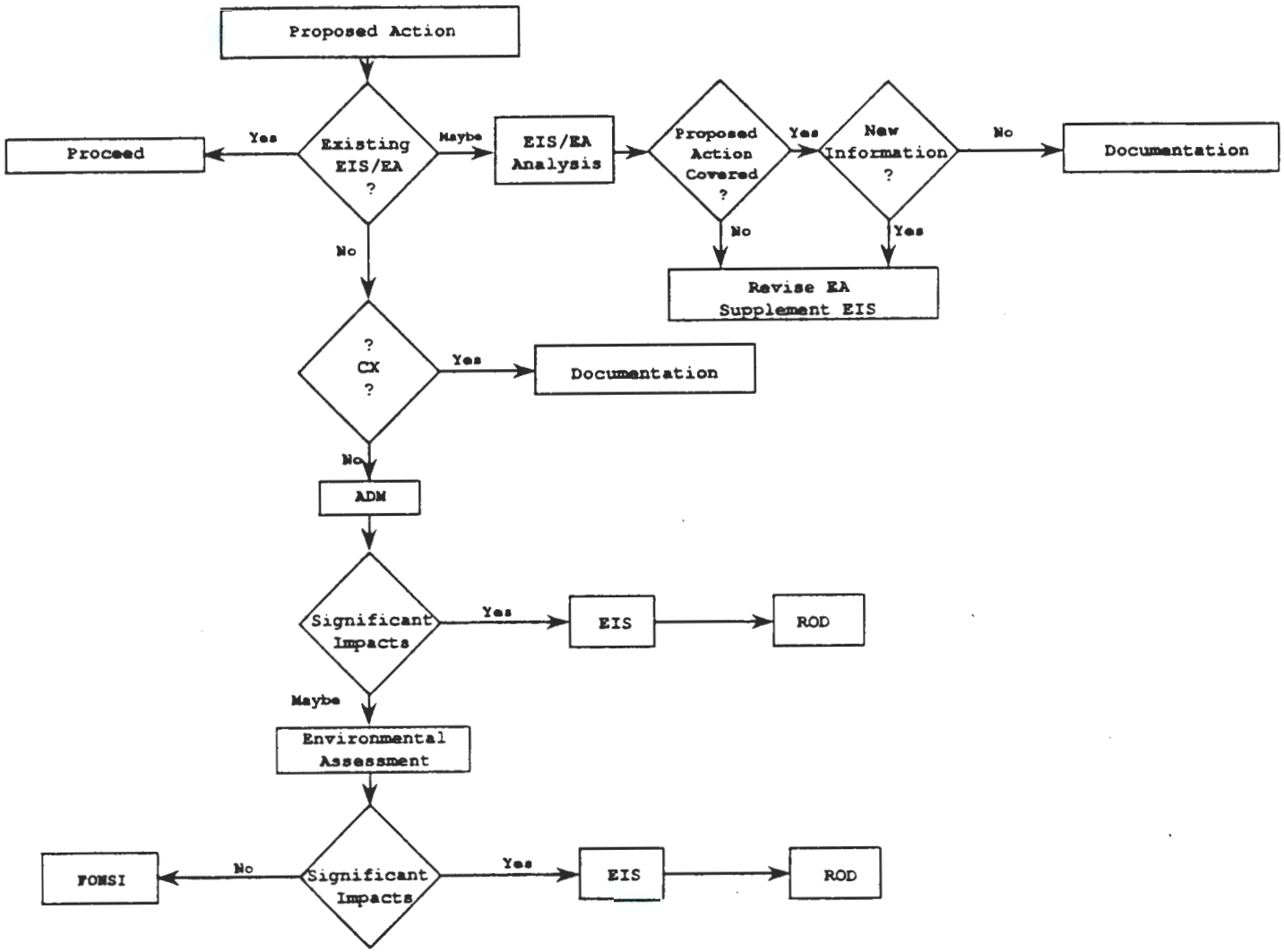

ADM = Action description memorandum
CX = Categorical exclusion
EA = Environmental assessment
EIS = Environmental impact statement
FONSI = Finding of no significant impact
ROD = Record of decision

This page intentionally left blank.

3.0 CLEAN AIR ACT OF 1977

3.1 BACKGROUND

The *Clean Air Act of 1977* (CAA) provides a mechanism for the U.S. Environmental Protection Agency (EPA) to regulate emissions into the air of toxic substances that may adversely impact human health or the environment. The implementing regulations of the CAA regulate stationary sources as well as mobile sources of air pollution. Among other things, the CAA establishes national ambient air quality standards that must be met by sources regulated under those corresponding regulations.

3.2 NEW SOURCE PERFORMANCE STANDARDS

Section 111 of the CAA authorizes the EPA to establish specific standards for new industrial sources of air pollutants, known as New Source Performance Standards. The EPA expects that establishment of these standards will ensure that specific industries do not unacceptably increase air pollutants. These regulations have been established at 40 CFR Part 60 and are applicable to facilities constructed or modified after such standards were established. Subpart C of 40 CFR Part 60 establishes a list of regulated industries covered by these regulations. It is unlikely that a project or demonstration associated with the UST-ID Program would be subject to regulation under this part. However, the cognizant manager should ensure that any newly constructed or modified facility is reviewed against these regulations to ensure that such standards, where applicable, can be met.

3.3 NATIONAL EMISSION STANDARDS FOR HAZARDOUS AIR POLLUTANTS

Regulations governing airborne radioactive emissions are codified at 40 CFR Part 61, "National Emission Standards for Hazardous Air Pollutants." Under the Subpart H regulations, the EPA has promulgated a standard mandating that radioactive airborne emissions from any DOE facility shall not exceed those amounts that would cause any member of the public to receive, in any given year, an effective dose equivalent (EDE) to 10 millirem per year.

The Subpart H regulations require that radionuclide emission rates be continuously measured at all stacks or vents with a potential to discharge radionuclides into the air in quantities that could cause an EDE to the hypothetical, maximally exposed offsite individual in excess of 1 percent of the 10 millirem per year EDE standard. Furthermore, each radionuclide that could contribute greater than 10 percent of the potential EDE from each such release point must be continuously measured according to the methods specified by the Subpart H regulations. With prior EPA approval, alternative methods may be used. When determining whether a given release point has the potential to exceed 1 percent of the 10 millirem per year standard, it must be assumed that all pollution control equipment between the point of generation and the point of discharge do not exist.

3.3.1 Application for Approval of Construction or Modification

According to 40 CFR Part 61.07, the owner or operator is required to submit to the EPA an application for approval of the construction of any new source or modification of any existing source of radionuclide emission. The application for approval is required to be submitted before the construction or modification is planned to begin. A separate application is required to be submitted for each stationary source and is required if the estimated maximum dose added by the new construction or modification is greater than 0.1 millirem per year. Each application for approval of construction must contain the following information:

- The name and address of the applicant
- The location or proposed location of the source
- Technical information describing the proposed nature, size, design, operating design capacity and method of operating design capacity, and method of operation of the source, including a description of any equipment to be used for control of emissions. Such technical information shall include calculations of emission estimates in sufficient detail to permit assessment of the validity of the calculations.

In addition to requiring an application for approval to construct new sources of radionuclides, the EPA also requires application approval for modifications to existing facilities. An application for approval of modification must also include the following information:

- The precise nature of the proposed changes
- The productive capacity of the source before and after the changes are completed
- Calculations of emissions' estimates before and after the changes are completed in sufficient detail to permit assessment of the validity of the calculations.

Subpart H of 40 CFR 61 requires information specifically for radionuclide emissions from DOE facilities. The 40 CFR 61.93 states: "To determine compliance with the standard, radionuclide emissions shall be determined and doses equivalent to members of the public shall be calculated using EPA approved sampling procedures, EPA models CAP-88 or AIRDOS-PC, or other procedures for which EPA has granted prior approval." Further, 40 CFR 61.93 indicates that DOE facilities, where the maximally exposed individual lives within 3 kilometers of all sources of emissions in the facility, may use EPA's COMPLY model and associated procedures for determining dose for purposes of compliance.

3.3.2 Approval of Construction or Modification

According to 40 CFR Part 61.08, the EPA will notify DOE within 60 days after receipt of all appropriate information of the approval or intention to

deny approval for construction or modification. Additional notifications are required once construction approval is granted, such as notification of intent to startup 30-60 days before operation. In addition, 40 CFR Part 61.09 requires another notification within 15 days following start-up.

3.4 IMPACTS TO THE UNDERGROUND STORAGE TANK-INTEGRATED DEMONSTRATION PROGRAM

It is unlikely that the UST-ID Program will be impacted by the new source performance standards of the CAA. As discussed above, Subpart C of 40 CFR 60 establishes a list of regulated industries that are covered by these regulations. It is unlikely that a project or demonstration associated with the UST-ID Program would be subject to regulation under this part.

It is possible that treatability studies or other activities associated with the UST-ID Program may require notification under "National Emission Standards for Hazardous Air Pollutants" regulations (40 CFR 61). The construction of new sources of radionuclide emissions or a modification to existing radionuclide emission sources may require notification and approval of such actions from the EPA. Approval for construction of new sources or modification of existing sources may take up to 6 months or longer. Therefore, it is important to identify projects that will be expected to increase radiological emissions early in the planning phases to ensure that all appropriate notifications and approvals can be secured without causing significant delays.

This page intentionally left blank.

4.0 RESOURCE CONSERVATION AND RECOVERY ACT OF 1976

4.1 BACKGROUND

The RCRA establishes a cradle-to-grave system for the management of hazardous waste. The RCRA, which establishes regulations for the generation, transportation, and TSD of hazardous waste, became effective on November 18, 1980. The RCRA regulations make generators of hazardous waste responsible for the proper TSD of that waste. The implementing RCRA regulations are identified at 40 CFR 260 through 268 and 40 CFR 270.

In 1984, the EPA amended RCRA to considerably expand the previous regulations. Among other things, these amendments, known as the *Hazardous and Solid Waste Amendments of 1984* (HSWA), authorized the EPA to establish treatment standards that must be met for all RCRA wastes before being placed in or on the land for disposal. These regulations are known as the "Land Disposal Restrictions" (LDR) (40 CFR 268).

The EPA also excluded certain types of wastes at 40 CFR 261. The following sections discuss some of the exclusions that may benefit the UST-ID Program, followed by a summary of the major requirements established at 40 CFR 260 through 268 and 270. For future consideration, this section also provides an analysis of the closure options available for RCRA treatment and storage tanks that are used for the storage of RMW.

4.2 IDENTIFICATION OF HAZARDOUS WASTE

In order for a material to be a hazardous waste, it must first meet the definition of a solid waste. The criteria for determining whether or not a material is a solid waste are identified at 40 CFR Part 261.2. In summary, a solid waste is any material that is abandoned, discarded, or recycled, unless it meets one of the exclusions of 40 CFR Part 261.4. It is important to note that a solid waste, by definition, includes certain wastewaters, sludges, slurries, and containerized gasses. Once a material has been determined to meet the definition of a solid waste, an evaluation is required to determine if the solid waste meets the definition of a hazardous waste.

A solid waste is defined as a hazardous waste if it exhibits a hazardous waste characteristic or is specifically listed by the EPA. The EPA has established four hazardous waste characteristics including corrosivity, ignitability, reactivity, and toxicity characteristic. The lists of wastes identified by the EPA include wastes generated from nonspecific sources (F-listed wastes), specific sources (K-listed wastes), and discarded commercial chemical products (P- and U-listed wastes).

The EPA established alpha-numeric waste codes that correspond to each category of waste. A waste exhibiting a hazardous waste characteristic is assigned a D code. For example, an ignitable waste is assigned the waste code of D001. Listed waste codes correspond to the designations discussed above, followed by a unique set of three numbers that correspond to one of the lists of wastes developed by the EPA. For example, spent carbon tetrachloride used as a degreaser will be assigned the waste code of F001.

Two major rules have been developed in association with listed hazardous waste: the mixture rule and the derived-from rule. The mixture rule states that a mixture of a listed hazardous waste and a solid waste renders the entire mixture a listed hazardous waste, irrespective of the resulting listed waste constituent concentration. The derived-from rule states that any waste derived from the TSD of a listed hazardous waste remains a listed hazardous waste until delisted, irrespective of the resulting listed waste constituent concentration.

4.3 SAMPLE EXCLUSION

The RCRA regulations establish an exclusion for hazardous waste samples that are being sent to an analytical laboratory for compositional analysis. The sample exclusion provision is identified at 40 CFR Part 261.4(d). Under the provisions of this exclusion, samples of solid waste or samples of water, soil, or air, collected for the sole purpose of testing to determine their characteristics or composition, are exempt from RCRA regulation provided that certain conditions are met. Samples collected for these purposes are exempt from RCRA regulations when:

- The sample is being transported to a laboratory for the purpose of testing or being transported back to the sample collector after testing
- The sample is being stored by the sample collector before transport to a laboratory for testing
- The sample is being stored in a laboratory before testing
- The sample is being stored in a laboratory (after testing) for a specific purpose (e.g., until the conclusion of a court case or enforcement action when further testing of the sample may be necessary).

To qualify for the sample exclusion, a sample collector shipping samples to a laboratory and a laboratory returning samples to a sample collector must comply with U.S. Department of Transportation (DOT), U.S. Postal Service (USPS), or any other applicable shipping requirements. If it is determined that the requirements of the DOT, USPS, or other shipping requirements do not apply to the sample, the sample collector or laboratory must package the sample so that it does not leak and the following information must accompany the sample:

- The sample collector's and laboratory's name, mailing address, and telephone number
- The quantity and description of the sample
- The date of shipment.

4.4 TREATABILITY STUDY SAMPLE EXCLUSION

On July 19, 1988, the EPA expanded a previous exclusion for laboratory samples to include samples obtained for the purposes of performing small-scale treatability tests. The regulations applicable to the collection and shipment of treatability study samples are identified at 40 CFR Part 261.4(e). In addition, a treatability study is defined as a study in which a hazardous waste is subjected to a treatment process to determine:

- Whether the waste is amenable to a treatment process or the level of pretreatment (if any) that is required
- The optimal process conditions needed to achieve the desired treatment or the efficiency of the treatment process
- The characteristics and volume of residuals from a particular treatment process.

Also included in this definition are liner compatibility, corrosion, and other material compatibility studies and toxicological and health effects studies. A "treatability study" is not a means to commercially treat or dispose of hazardous waste.

4.4.1 Limitations on Treatability Studies

Persons who generate or collect samples for the purposes of performing treatability studies are not subject to the requirements of 40 CFR Parts 261 through 263 (i.e., identification of hazardous waste, generator standards, and transporter standards, respectively) when one of the following applies.

- The sample is being collected and prepared for transportation by the generator or sample collector.
- The sample is being accumulated or stored by the generator or sample collector before transporting to a laboratory or testing facility.
- The sample is being transported to the laboratory or testing facility for the purpose of conducting a treatability study.

4.4.2 Quantity Limits per Waste Stream per Treatment Process

The EPA has established weight limits for each process being evaluated and for each generated waste stream. The 40 CFR Part 261.4(e) provides for an exemption of 1,000 kg on nonacute hazardous waste per waste stream pretreatment process; 1 kg of acute hazardous waste per waste stream per treatment process; or 250 kg of soils, water, or debris contaminated by acute hazardous waste per waste stream per treatment process.

The EPA defines "waste stream" such that a waste stream and the quantity limit are not based on the EPA waste code alone; rather, the Agency believes that a broad interpretation is necessary because each medium (i.e., soils, water, or debris) may require a different treatability study and may need to

be shipped to a different laboratory or testing facility. The EPA also broadly defines "treatment process" to allow a generator to evaluate various alternative approaches. For example, a generator could send 1,000 kg of nonacute hazardous waste; 1 kg of acute hazardous waste; or 250 kg of soils, water, or debris contaminated with acute hazardous waste for each generated waste stream to a number of different processes (i.e., biological treatment, incineration, fixation, etc.).

On a case-by-case basis, the EPA may allow an increase to the above specified quantity limitations of an additional 500 kg of nonacute hazardous waste; 1 kg of acute hazardous waste; and 250 kg of soils, water, and debris contaminated with acute hazardous waste. The EPA will only allow additional quantities of hazardous waste when it can be demonstrated that one of the following circumstances or situations exist.

- There has been an equipment or mechanical failure and additional waste is needed to conduct a study.
- There is a need to verify the results of a previously evaluated treatment process.
- There is a need to study and analyze alternative techniques within a previously evaluated treatment process.
- There is a need to do further evaluation of an ongoing treatability study to determine final specifications for treatment.

These adjustments may only be authorized if the specified limits per waste stream per treatment process have been subjected to a treatability study evaluation and insufficient data are available to properly design a treatment process.

4.4.3 Transportation Shipment Limits

The EPA has established shipment limits for treatability study samples as follows: 1,000 kg of nonacute hazardous waste; 1 kg of acute hazardous waste; or 250 kg of soils, water, or debris contaminated with acute hazardous waste. These shipment limitations apply to the shipment of waste samples from the generator or sample collector to the laboratory or testing facility when such samples are being sent for the purpose of conducting a treatability study. The exemption will also apply when unused waste samples and residues generated by the treatability study are returned to the generator or sample collector following completion of the study.

All samples of hazardous waste being shipped to a laboratory for the purpose of performing treatability studies remain subject to all applicable DOT and USPS regulations regarding shipment of hazardous materials. If the shipments do not fall under DOT or USPS jurisdiction, the generator or sample collector and the laboratory or testing facility must follow the requirements for labeling and packaging established at 40 CFR Part 261.4(e)(2)(iii).

4.4.4 Treatment Rate Limit

In order for a laboratory performing treatability studies to be exempt per 40 CFR Part 261.4(f), a number of restrictions apply. The laboratory is required to notify the Regional Administrator of EPA in writing at least 45 days before conducting treatability studies. In addition, the EPA has established a treatment rate of 250 kg per day of "as received" waste for the entire laboratory or testing facility. The term "as received" was chosen because some of the treatment processes involve the addition of nonhazardous material to reduce the environmental mobility of hazardous constituents. "As received" refers to the waste shipped by the generator or sample collector as it arrives at the laboratory or testing facility. Laboratories and testing facilities that are conducting treatability studies and that meet the treatment rate limit are exempted from the requirements to obtain a RCRA Subtitle C treatment permit.

4.4.5 Storage Limits

The EPA has established a storage limitation of 1,000 kg per laboratory or testing facility. However, the EPA has also decided to specify the 1,000 kg storage limitation for "as received" waste. The 1,000 kg storage limitation per laboratory or testing facility can include 500 kg of soils, water, or debris contaminated with acute hazardous waste or 1 kg of acute hazardous waste.

4.4.6 Residues and Unused Samples

Any untreated sample and any residue generated during the treatability study must be returned to the generator within 90 days of study completion or within 1 year from the date of shipment by the generator to the laboratory or testing facility, whichever is earlier. Otherwise, the laboratory or testing facility conducting the treatability test must manage these materials as a RCRA hazardous waste (unless the waste is no longer hazardous). Once samples and residues are returned to the generator, they are no longer exempt under these regulations. Ultimately, the unused sample and residues that are still hazardous must be manifested and disposed of in a RCRA-designated facility by the laboratory or testing facility, the waste generator, or the sample collector.

4.4.7 Reporting and Recordkeeping Requirements

In addition to the requirements specified above, the EPA has established specific reporting and recordkeeping requirements applicable to the laboratory or testing facility performing the treatability study. These requirements are identified at 40 CFR Part 261.4(f)(7) through (9).

4.5 RESEARCH DEVELOPMENT AND DEMONSTRATION PERMITS

The HSWA provided the EPA authority to issue permits for research, development, and demonstration (RD&D) treatment activities. The amendment

grants EPA authority to issue permits independent of existing regulations relating to hazardous waste treatment processes. The EPA is directed to include certain provisions in each permit, as well as any other requirements deemed necessary, to protect human health and the environment. With several exceptions, the amendment also allows a waiver or modification of the permit application and permit issuance requirements of the general permit regulations. The EPA has codified the requirements for obtaining an RD&D permit at 40 CFR Part 270.65. This regulation has four basic provisions, which are discussed below.

Paragraph (a) of the regulation authorizes the Administrator to issue RD&D permits for innovative and experimental technologies or processes for which permit standards have not been established under 40 CFR Part 264 or 266. The regulation authorizes the Administrator to establish permit terms and conditions for the RD&D activities, as necessary, to protect human health and the environment. The statutory amendment allows the Administrator to select the appropriate technical standards for each RD&D activity to be permitted. The EPA is required to address construction, limit operation for not longer than 1 year, and place limitations on the waste that may be received to those types and quantities of wastes deemed necessary to conduct the RD&D activities. Other possible requirements include, but are not limited to, provisions regarding monitoring, operation, closure, remedial action, and testing and providing information.

Paragraph (b) provides that the Agency will generally follow the permitting procedures of 40 CFR Parts 124 and 270. As authorized, EPA reserves the right to waive or modify these procedures to expedite permitting as long as human health and the environment are protected. However, EPA will not waive the public participation procedures.

Paragraph (c) implements the statutory authority provision that authorizes the Administrator to order an immediate cessation of any operations at the facility, if necessary, to protect human health or the environment.

Finally, paragraph (d) indicates that permits are initially to be issued for a period of 1 year of operation. The permit may be renewed up to three times for periods of not more than 1 year of operating days.

Background information for HSWA provides three examples of RD&D activities that may be covered by these regulations.

1. A common experiment involves an individual or company who has designed on paper or in the laboratory an innovative treatment system for hazardous waste. To determine whether this new technology is technically feasible, a small pilot-scale unit may be constructed and operated for purposes of evaluation. If this is successful, a larger but still pilot-scale, experimental unit may be constructed to demonstrate the reliability, economic feasibility, and environmental impacts of the process.

2. A type of hazardous waste management experiment involves an equipment vendor and a waste generating or processing customer. Vendors often custom prepare storage and processing equipment (i.e.,

tanks, incinerators, etc.) based on a customer's individual needs, and this may require one or more tests with a pilot facility using samples of the customer's waste.

3. A manufacturer or user of a particular commercial treatment process may want to improve its efficiency or effectiveness or reduce environmental impacts. This may involve the construction of a pilot-scale treatment unit that will be operated in an experimental mode to test new wastes or alternate operating conditions.

The above list of examples is not an exclusive list of the activities that may be permitted.

4.6 GENERATOR AND TRANSPORTER STANDARDS

The 40 CFR Part 262 establishes the requirements applicable to generators of hazardous waste. According to these regulations, large quantity generators may accumulate hazardous waste onsite without a permit, provided that the waste is not accumulated for greater than 90 days from the time of initial generation. To accumulate hazardous waste onsite, the generator must ensure that a hazardous waste determination is made on the waste and that the waste is properly transported to a permitted TSD facility. The generator must also ensure that containers of hazardous waste are packaged, marked, and labeled in accordance with DOT requirements.

The regulations applicable to transporters of hazardous waste are identified at 40 CFR Part 263. Any person transporting hazardous waste must receive an EPA identification number and ensure that each shipment is accompanied with a hazardous waste manifest. Before transporting the hazardous waste, the transporter must sign and date the manifest, acknowledging acceptance of the hazardous waste from the generator. The transporter must return a signed and dated copy of the manifest to the generator and ensure that any subsequent transporter or designated facility also receives a copy of the manifest. The transporter must ensure that the entire shipment of hazardous waste is transported to the designated facility or to an alternate facility if the designated facility is unable to accept the shipment. Finally, the transporter of hazardous waste must maintain a copy of the manifest, signed by the generator, for a period of at least 3 years and must take immediate response action to discharges of hazardous waste that occur during transportation.

4.7 LAND DISPOSAL RESTRICTIONS

As discussed above, one of the major provisions of HSWA was the establishment of the LDR regulations. These regulations are identified at 40 CFR Part 268 and require that all hazardous wastes meet certain treatment standards before being disposed of in or on the land. These treatment standards require using a specified technology or a specific concentration and require the use of best demonstrated available technology (BDAT). Where a treatment standard is identified as a specified technology, the owner or operator may only treat the waste using that specific technology. However,

where the treatment standard is specified as a concentration, the owner or operator may use any technology that will reduce the regulated constituents to the specified concentration.

The LDR regulations also establish two broad waste categories that will impact the type of treatment required: wastewater and nonwastewater. Wastewaters are wastes that contain less than 1 percent by weight total organic carbon (TOC) and less than 1 percent total suspended solids. An alternate definition of wastewater was developed for listed hazardous wastes with the waste code of F001-F005. For these wastes, a wastewater is defined as solvent-water mixtures that contain less than 1 percent by weight TOC or less than 1 percent by weight total F001-F005 solvent constituents listed in 40 CFR Part 268.41. Nonwastewaters are defined as those wastes that do not meet the definition of wastewater.

The LDR regulations require the generator of a hazardous waste to determine whether or not the waste is restricted and, thus, subject to LDR regulations. The generator is required to make this determination at the point of generation and before commingling with other waste streams. In addition, 40 CFR Part 268.7 establishes the waste analysis requirements and the certification requirements for wastes that do and do not meet the applicable treatment standard of 40 CFR Part 268, Subpart D.

The LDR regulations also establish limitations on the storage of restricted waste, known as the storage prohibition. Under this prohibition, an owner or operator of a TSD facility may store a restricted hazardous waste for up to 1 year, provided that such storage is necessary to accumulate sufficient quantities of waste to facilitate treatment. The burden of proving that such accumulation is legitimate rests with the EPA during the first 1-year accumulation period. After the first year of accumulation, the burden of proving that the accumulation of hazardous waste is necessary to facilitate treatment rests with the owner or operator.

All restricted wastes are prohibited from land disposal without prior treatment unless a variance from the LDR regulations is obtained from the EPA. The types of variances from the LDR regulations are a no-migration petition and a treatability variance. To secure a no-migration petition, the owner or operator must demonstrate that there will be no release of hazardous constituents from the land disposal unit for as long as the waste remains hazardous. The information required for this type of petition is identified at 40 CFR Part 268.6. Additionally, an owner or operator may file a treatability variance petition if the waste in question is significantly different than the waste that was evaluated in establishing the corresponding BDAT treatment standard. An equivalency petition may also be filed when a specified technology will not be used, but an equivalent level of treatment will be provided.

4.8 TREATMENT, STORAGE, AND DISPOSAL FACILITIES

In establishing the RCRA regulations, the EPA determined that existing facilities or facilities for which construction had commenced would be allowed to operate under interim status until a final permit was approved by the EPA. A facility was determined to be in existence if TSD of hazardous waste was

being conducted on or before November 19, 1980. A facility was considered to have begun construction if contractual obligations, which could not be canceled or modified without substantial loss, had been entered into for physical construction of the site. To allow continued operation of TSD facilities under interim status, the EPA required the owner or operator of existing facilities to submit a Part A permit application. The second part of the permit application, the Part B permit application, was required to be submitted to the EPA by dates specified in 40 CFR Part 270, depending upon the type of unit in question.

The EPA has established technical standards for interim status facilities at 40 CFR Part 265 and for final status facilities (i.e., those that have received an approved facility permit) at 40 CFR Part 264. The EPA has established technical standards for containers, tanks, surface impoundments, landfills, waste piles, land treatment units, incinerators, and miscellaneous units. As discussed above, hazardous waste may be accumulated without undergoing the permitting process, provided that such waste is transported to a permitted TSD facility within 90 days of generation.

A TSD facility may only accept wastes that have been identified on the corresponding Part A and Part B permit applications. If a particular waste code is not included on the TSD facility's permit application, the permit will require modification in accordance with the procedures specified at 40 CFR Part 270. New TSD facilities are not allowed to manage hazardous waste until they receive final permit approval from the EPA or unless an existing facility can be expanded to accommodate the waste or process in question.

4.9 TREATMENT AND STORAGE TANK TECHNICAL STANDARDS

The EPA has established technical standards for owners and operators of hazardous waste treatment and storage tank systems at 40 CFR Part 264 and 265, as discussed above. These standards have been established to ensure proper installation and operation of hazardous waste tank systems and to ensure that an owner or operator is adequately prepared to respond to releases from such tank systems.

4.9.1 Design and Installation of New Tank Systems

The owner or operator of new tank systems must obtain and submit to the Regional Administrator a written assessment attesting to the integrity of the facility's hazardous waste tank system. This assessment must be submitted at the time the Part B permit application is submitted and must be reviewed and certified by an independent, qualified, registered, professional engineer. At a minimum, this assessment must include the following information:

- Design standards according to which the tank system was constructed
- Hazardous characteristics of the waste to be handled
- Factors affecting the potential for corrosion for those portions of the tank system in contact with the soil

- The type and degree of external corrosion protection.

In addition to the written assessment, new tank systems must be certified to ensure that the tank system is properly installed. All new tank systems must be tightness-tested and the appropriate degree of corrosion protection must be provided. All statements attesting to the proper installation, certification of design, and other requirements of 40 CFR Part 264.193 must be maintained at the facility.

4.9.2 Containment and Detection of Releases

To prevent releases of hazardous waste to the environment, all hazardous waste tank systems are required to be equipped with secondary containment. Secondary containment for tanks may include one or more of the following:

- A liner (external to the tank)
- A vault
- A double-walled tank
- An equivalent device as appropriated by the Regional Administrator.

An owner or operator of a hazardous waste tank system may petition the Regional Administrator for a variance from the secondary containment requirements. To obtain a variance from this requirement, the owner or operator must demonstrate that an alternate secondary containment design will prevent the migration of hazardous constituents to the environment as effectively as the above recommended methods. A petition for an equivalent secondary containment system must meet and address all of the informational requirements of 40 CFR Part 264.193(g).

4.9.3 General Operating Requirements

An owner or operator of a hazardous waste tank system must ensure that the hazardous waste to be stored is compatible with the treatment or storage tank. Owners and operators must ensure that controls and practices are taken to prevent spills and overfills from a hazardous waste tank or secondary containment. Spill-prevention controls include the use of check valves and dry disconnect couplings, among others. Overfill prevention controls include the use of level-sensing devices, high-level alarms, and automatic feed cutoff, among others.

In addition to the spill and overfill prevention methods, daily inspections of the aboveground portions of hazardous waste tank systems must be performed. The inspection should focus on signs of corrosion, erosion of the secondary containment system, and information from the release detection and monitoring equipment. Cathodic protection systems, if present, must be inspected in accordance with the following schedule.

- Proper operation of the cathodic protection system must be confirmed within 6 months after installation and annually thereafter.

- All impressed current release detection systems must be inspected and/or tested, as appropriate, at least bimonthly (i.e., every other month).

4.9.4 Response to Leaks or Spills

A tank system or secondary containment system from which there has been a leak or spill, or which is unfit for use, must be removed from service immediately. The regulations of 40 CFR Part 264.196 establish the subsequent response actions that must be initiated by the owner or operator in response to a spill or release of hazardous waste from a tank system. They include, but are not limited to, the following.

- Immediately stop the flow of hazardous waste into the tank system or secondary containment system and inspect the system for the cause of the release.

- Remove as much waste as is necessary to prevent further releases to the environment from the tank system or secondary containment system within 24 hours after detecting the release. If it is impractical to meet the 24-hour requirement, waste removal must proceed within the earliest time practicable to prevent further releases to the environment.

- Immediately conduct a visual inspection of the tank system and prevent further migration of the leak or spill to soils or surface water and remove and properly dispose of contaminated soil or surface water.

4.10 TREATMENT AND STORAGE TANK CLOSURE OPTIONS

The following sections discuss regulatory options that may be pursued to address final closure of a tank system associated with the UST-ID Program. Final closure of a RCRA-regulated tank system must be undertaken in accordance with an approved closure plan. Development of a closure plan and closure options for a RCRA tank system may be outside of the scope of the UST-ID Program. However, the following discussion may be helpful in establishing the most appropriate approach for closure of tanks used for the treatment and storage of RMW.

In most cases, closure will be undertaken in accordance with existing RCRA regulations. These closure options may include: (1) retrieve or decontaminate all waste and waste residues, contaminated equipment, and tank systems (40 CFR Part 264, Subpart J); (2) perform closure as a landfill with waste remaining in place (40 CFR Part 264, Subpart N); or (3) perform closure as a miscellaneous unit (40 CFR Part 264, Subpart X).

4.10.1 Closure as a Treatment and Storage Tank

The 40 CFR Part 264, Subpart J tank standards require complete removal or decontamination of waste and the tank system upon closure. In the event that

the owner or operator cannot remove all contaminated soil at closure, final closure must be conducted in accordance with the requirements for landfills. In addition, postclosure monitoring would be required in accordance with a postclosure permit application, meeting the requirements of 40 CFR Part 264, Subpart N, "Landfills." Depending upon the physical characteristics of the waste in question, it may not be feasible to meet the remove or decontaminate standard. In this case, a landfill closure option should be evaluated.

4.10.2 Closure as a Landfill

In a December 10, 1987, *Federal Register* (52 FR 237, p. 46946), the EPA provided clarification on the definition of a landfill. As part of this clarification, the EPA stated the following:

> "Under limited circumstances, the Subpart J tank standards do allow treatment or storage tanks that cannot remove all contamination at closure to close and to perform post-closure care in accordance with the closure and post-closure requirements for landfills. Further, disposal in tanks will be regulated under the Subpart N standards as a landfill because "landfills" and the disposal of hazardous waste in tanks raise similar human health and environmental concerns and because tanks are similarly placed in or on the land."

Although this language is not reflected in current regulations, it is clear that the EPA does have the discretion to allow a landfill closure of treatment and storage tanks when contamination cannot be removed. The advantage to this approach is that complete waste removal or decontamination would not be required.

As part of the landfill closure requirements of 40 CFR Part 264, Subpart N, postclosure monitoring, including the installation of an intrusion barrier and a RCRA-compliant groundwater monitoring system, would be required. Also, postclosure monitoring and inspection of the closed facility would be required for a period of at least 30 years.

4.10.3 Closure as a Miscellaneous Unit

The UST-ID Program will evaluate a number of innovative waste treatment options, including in situ treatment. The EPA developed standards for TSD facilities that are not addressed by the existing RCRA Subtitle C regulatory framework. These regulations are identified at 40 CFR Part 264, Subpart X, "Miscellaneous Units." Depending upon the type of technology implemented for a given tank system, classification of a tank system as a miscellaneous unit may provide a mechanism for obtaining a RCRA permit when a tank system cannot meet the remove or decontaminate standard. For example, in situ vitrification may prove to be an acceptable technology to accommodate closure of a tank system. In this case, treatment would be initiated in a tank system; but, as vitrification proceeds, the tank system and waste contained in the tank would be vitrified, resulting in a landfill type of closure activity. The waste unit designation for those situations where tank waste cannot be removed or decontaminated will most likely be concluded through negotiations with state authorities.

4.11 IMPACTS TO THE UNDERGROUND STORAGE TANK-INTEGRATED DEMONSTRATION PROGRAM

The RCRA regulations are expected to have significant impacts on the UST-ID Program. Regulations applicable to the generation of hazardous waste as well as obtaining of permits for RD&D activities may be required, and adequate time to secure all needed permits should be included early in the planning phases. In addition, treatment activities associated with pretreatment programs may require a RCRA treatment permit if such activities cannot be conducted under the provisions of a RD&D permit. As discussed above, new TSD facilities require permit approval before construction unless the activities can be conducted in an existing facility under the provisions of an expansion.

This page intentionally left blank.

5.0 CLEAN WATER ACT OF 1977

5.1 BACKGROUND

In 1972 Congress recodified the Federal Water Pollution Control Act. The recodified act, known as the *Clean Water Act of 1977* (CWA), made the EPA responsible for establishing wastewater effluent standards on an industry-by-industry basis. Among other things, the implementing regulations of the CWA were developed to regulate wastewater discharges from industrial point sources and also to regulate the discharge of industrial wastewaters to publicly owned treatment works (POTW). These implementing regulations and discharge limits have been codified at 40 CFR Parts 122 through 125.

5.2 WASTEWATER DISCHARGES THROUGH A NATIONAL POLLUTANT DISCHARGE ELIMINATION SYSTEM

Section 402 of the CWA establishes permitting requirements and limitations for point source discharges of wastewater into any waters of the United States. The requirements applicable to such discharges and the corresponding discharge limits have been codified at 40 CFR Part 122 entitled "National Pollutant Discharge Elimination System" (NPDES). Section 502(14) of the CWA defines a "point source" as follows:

> "Any discernable, confined, and discrete conveyance, including but not limited to any pipe, ditch, channel, tunnel, conduit, well, discrete fissure, container, rolling stock, concentrated animal feeding operation, or vessel or other floating craft, from which pollutants are or may be discharge. This term does not include agricultural stormwater discharges and return flows from irrigated agriculture."

In addition, the EPA defines waters of the United States to include the following: (1) navigable waters, (2) tributaries of navigable waters, (3) interstate waters, and (4) intrastate lakes, rivers, and streams.

5.2.1 Permitting Requirements

Under Section 402 of the CWA, the EPA is the NPDES permit-issuing authority until such time that the EPA authorizes a given state to implement the federal program. The requirements associated with obtaining an NPDES permit are codified at 40 CFR Part 122, Subpart B. According to these regulations, any person proposing a new discharge is required to submit an application to the EPA or authorized state at least 180 days before the day on which the discharge is to commence, unless the Director of EPA or an authorized state has granted permission for a later date. Persons proposing a new discharge are encouraged to submit their applications well in advance of the 180-day requirements to avoid delays. In most cases, when a given state is authorized to implement the federal program, the effluent discharge limits specified in the NPDES permit will make reference to corresponding state water quality standards.

5.3 WASTEWATER DISCHARGES TO A PUBLICLY OWNED TREATMENT WORKS

In the event that a facility associated with the UST-ID Program discharges wastewater to a POTW, the discharge and permit requirements of 40 CFR Part 403 may be applicable. These requirements were adopted pursuant to Section 307(b) of the CWA and were established to protect the POTW receiving such wastewater and to prevent the discharge of pollutants that will pass through the POTW as untreated wastewater. The regulations developed under 40 CFR Part 403 include general wastewater discharge limits, which all facilities discharging to a POTW must comply with, as well as industry specific standards that are applicable only to that specified industry. The general wastewater discharge limits, established to prevent interruption of the POTW, include the following discharge prohibitions:

- Pollutants that create a fire or explosion hazard in the POTW, including, but not limited to, waste streams with a closed cup flashpoint of less than 140 degrees Fahrenheit or 60 degrees Celsius using the test method specified in 40 CFR Part 261.21

- Pollutants that will cause corrosive structural damage to the POTW, but in no case discharges with a pH lower than 5.0 unless the works is specifically designed to accommodate such discharges

- Solid or viscous pollutants in amounts that will cause obstruction to the flow in the POTW, resulting in interference

- Any pollutant, including oxygen-demanding pollutants (biological oxygen demand, etc.) released in a discharge at a flow rate and/or pollutant concentration that will cause interference with the POTW

- Heat in amounts that will inhibit biological activity in the POTW and will result in interference, but in no case heat in such quantities that the temperature at the POTW treatment plant exceeds 104 degrees Fahrenheit or 40 degrees Celsius unless the approval authority, upon request of the POTW, approves alternate temperature limits

- Petroleum oil, nonbiodegradable cutting oil, or products of mineral oil origin in amounts that will cause interference or pass through

- Pollutants that result in the presence of toxic gases, vapors, or fumes within the POTW in a quantity that may cause acute worker health and safety problems.

5.3.1 Pretreatment Permits

Under Section 307 of the CWA, the EPA is authorized to issue pretreatment standards, codified at 40 CFR Part 403. These standards are usually established as industrial effluent guidelines, requiring industrial facilities discharging directly into municipal treatment works to remove toxic substances from their wastes through waste pretreatment before discharging to the POTW system. U.S. Department of Energy facilities are not categorized as

industrial, for which the EPA has established pretreatment discharge limits. The POTW receiving wastewater from DOE facilities will establish effluent discharge limits for the facility in question, based upon the effluent limitations specified in its NPDES permit.

5.4 IMPACTS TO THE UNDERGROUND STORAGE TANK-INTEGRATED DEMONSTRATION PROGRAM

The extent to which the requirements of the CWA will impact the UST-ID Program is contingent upon the type of wastewater generated and how it is discharged from the generating source. It is unlikely that projects and/or demonstrations conducted in existing facilities will be impacted by the requirements of the CWA. In this case, it is assumed that existing facilities that discharge wastewater from a point source or to a POTW would have already addressed pretreatment and permitting requirements.

The requirements of the CWA may significantly impact the UST-ID Program for newly constructed facilities that will discharge wastewater from a point source or to a POTW. Permitting and pretreatment requirements for these facilities will need to be identified well in advance of facility construction. As discussed above, NPDES permits are required to be submitted to the EPA or authorized state 6 months before beginning construction, and the owner or operator is encouraged to submit permit applications well in advance of the 6-month time period to avoid delays.

This page intentionally left blank.

6.0 U.S. DEPARTMENT OF ENERGY ORDERS

6.1 BACKGROUND

Congress passed the *Atomic Energy Act of 1954* (AEA) to establish a program for governmental control of the possession, use, and production of atomic energy and special nuclear materials in the interest of common defense and security and to protect human health and safety of the public. The AEA specifically regulates source, special nuclear, and by-product materials and originally established the Atomic Energy Commission as the regulatory authority governing the management of these materials. The DOE is now the lead regulatory authority and implements the provisions and requirements of the AEA through DOE orders.

6.2 DOE ORDER 5400.1

The DOE Order 5400.1 establishes environmental protection program requirements and responsibilities for DOE operations and ensures compliance with applicable environmental protection laws and regulations. Chapter II of this order requires field organizations and DOE contractors to notify the Headquarters Emergency Operations Center of the significant nonroutine release of any pollutant or hazardous substance. A significant nonroutine release is determined to mean those releases of hazardous substances that are reported to the EPA National Response Center as required by CERCLA. Chapter III requires DOE operations develop and implement program plans for each facility or group of facilities for which they are responsible. Finally, Chapter IV requires the development of effluent monitoring plans for each DOE facility.

6.3 DOE ORDER 5400.5

The DOE Order 5400.5 establishes dose limits for public exposure to radiation from DOE operations, sets specific limits for releases of radiation to air and water, and requires that doses to individuals be maintained ALARA. These limits will require effective protection against radiation releases during waste management operations. This order also establishes derived concentration guides for conducting radiological environmental protection programs at operational DOE facilities. Derived air concentration guides for controlling occupational intake of radionuclides through inhalation are also provided in this order.

6.4 DOE ORDER 5480.3

The DOE Order 5480.3 establishes requirements for the packaging and transportation of hazardous materials, hazardous substances, and hazardous wastes. This order states "when offered to the carrier, each shipment of hazardous materials, hazardous substances, or hazardous waste shall be in compliance with this order, and the applicable safety regulations of the Department of Transportation." The package standards specified in this order include the standards for radioactive materials in amounts greater than Type A

quantities, structural standards for Type B packaging, and criticality standards for fissile material packages.

6.5 DOE ORDER 5480.11

The DOE Order 5480.11 establishes radiation protection standards and program requirements for the DOE and DOE contractor operations with respect to the protection of the worker from ionizing radiation. These radiation standards are consistent with EPA guidance, based on recommendations by the National Council on Radiation Protection and Measurements and the International Commission on Radiological Protection.

The DOE policy published in DOE Order 5480.11 requires that occupational exposure to radiation be maintained ALARA. The exposure of an occupational worker shall not exceed the following values.

- Stochastic effects--The annual effective dose from internal and external sources is 5 mrem.

- Nonstochastic effects--The annual dose equivalent for individual organs is:

  - lens of eye = 15 mrem
  - skin of the whole body = 50 mrem
  - extremity = 50 mrem
  - organ or tissue = 50 mrem.

- Unborn child: The annual dose equivalent to the unborn child during the gestation period is 0.5 mrem.

Nonemergency planned special exposures may, under unusual circumstances, exceed the annual effective dose equivalent limits specified above.

6.6 DOE ORDER 5820.2A

The DOE Order 5820.2A applies to all DOE contractors and subcontractors performing work that involves management of waste containing radioactivity. This order requires that wastes be managed in a manner that ensures protection of the health and safety of the public, operating personnel, and the environment. The DOE Order 5820.2A establishes requirements for management of HLW, TRU, and LLW, as well as wastes containing naturally occurring or accelerator-produced radioactive material; decommissioning of facilities; and the format for a waste management plan.

6.6.1 Management of High-Level Waste

Chapter I of DOE Order 5820.2A establishes the requirements applicable to HLW. This chapter defines HLW as:

"The highly radioactive waste material that results from the reprocessing of spent nuclear fuel, including liquid waste produced directly in

reprocessing and any solid waste derived from the liquid, that contains a combination of transuranic waste and fission products in concentrations requiring permanent isolation."

According to this DOE order, new facilities will ensure protection of the public and operating personnel from hazards associated with normal HLW operations, accident conditions, and the effects of natural phenomena. Existing facilities shall be reviewed against current technical criteria, and a safety analysis report for HLW operations shall be prepared as detailed in DOE Order 5481.1B.

The DOE Order 5820.2A also establishes requirements for single and double contained storage tank systems and transfer operations for HLW. Liquid and solid HLW must be characterized in accordance with 40 CFR Parts 261 and 264. The waste characteristics and compatibility information must also be recorded in the safety analysis report. With regard to transfer systems, all HLW handling, transfer, and storage facilities must be doubly contained. This DOE order further establishes the requirements for performing monitoring, surveillance, and leak detection of HLW storage tank systems.

The DOE Order 5820.2A establishes the HLW disposal requirements for newly generated and existing HLW. New and readily retrievable waste must be processed and the HLW fraction disposed of in a geologic repository according to the requirements of the *Nuclear Waste Policy Act of 1982*. Options for permanent disposal of other waste shall be evaluated and include such methods as in-place stabilization as well as retrieval and processing, as required for new and readily relievable waste (DOE Order 5481.1B).

6.6.2 Management of Transuranic Waste

Chapter II of DOE Order 5820.2A establishes the policies and guidelines for managing DOE TRU waste, starting with its generation and continuing through closure of Waste Isolation Pilot Plant (WIPP). Transuranic waste is defined as:

"Without regard to source or form, waste that is contaminated with alpha emitting transuranium radionuclides with half-lives greater than 20 years and concentrations greater than 100 nanocuries per gram at the time of assay."

This DOE order indicates that TRU waste shall be certified in compliance with the WIPP. Any TRU waste that has been certified for shipment to WIPP shall be placed in interim storage until the WIPP becomes operational. Uncertified TRU wastes will not be shipped to the WIPP except by special permission granted in response to a formal, documented request to the WIPP Acceptance Criteria Certification Committee and the WIPP Waste Operations.

Transuranic waste packaging has been established in DOE Order 5820.2A. Newly generated TRU waste must be placed in noncombustible packaging, meeting DOT requirements. All Type A TRU waste containers must be equipped with a method to prevent pressure buildup. All waste packages must be marked, labeled, and sealed in accordance with the WIPP Acceptance Criteria as well as EPA and DOT requirements.

6.6.3 Management of Low-Level Waste

Chapter III of DOE Order 5820.2A establishes the requirements for management of LLW. In general terms, LLW is defined as any waste that does not meet the definition of HLW or TRU waste. According to this DOE order, LLW that has not yet been disposed must be managed to meet four performance objectives:

- Protect public health and safety, in accordance with DOE standards
- Ensure that external exposures to the waste and radioactive materials that may be released do not result in effective radiation dose equivalents that exceed 25 millirem per year to any member of the public and are maintained ALARA
- Limit committed effective radiation dose to inadvertent intruders after 100 years to 100 millirem per year for continuous exposure and 500 millirem per year for a single acute exposure
- Protect groundwater resources, consistent with federal, state, and local requirements.

Chapter III of DOE Order 5820.2A also establishes requirements for waste characterization of LLW. The LLW will be characterized to allow proper segregation, treatment, storage, and disposal. Waste characterization data will include information on the physical and chemical characteristics of the waste as well as the radionuclides and their associated concentrations. The DOE order also specifies closure; postclosure and environmental monitoring requirements are also established for LLW disposal sites.

6.7 DOE ORDER 6430.1A

The DOE Order 6430.1A provides mandatory, minimally acceptable requirements for facility design. These criteria apply to any building, acquisition, new facility addition, and alteration (including onsite constructed buildings, plant-fabricated modular buildings, and temporary facilities). These criteria will be applicable during the planning, design, and developing phases.

6.8 IMPACTS TO THE UNDERGROUND STORAGE TANK-INTEGRATED DEMONSTRATION PROGRAM

The extent to which DOE orders will impact the UST-ID Program will depend on the type of activity proposed and whether the associated activities will be conducted in existing or new facilities. For new facilities, DOE Order 6430.1 will be applicable and will significantly impact design considerations. The DOE Order 5820.2A will be applicable where RMW is generated and may impact operations when equipment is ready to be demonstrated, if such demonstrations are conducted in a tank containing RMW. The DOE Order 5820.2A requires a safety analysis report for certain activities, which must be addressed during evaluation of UST-ID Program technology and demonstration activities.

are conducted in a tank containing RMW. The DOE Order 5820.2A requires a safety analysis report for certain activities, which must be addressed during evaluation of UST-ID Program technology and demonstration activities. Finally, any hazardous waste (including RMW) will be required to meet the applicable portions of DOE Order 5480.3 for the transportation of such waste.

This page intentionally left blank.

7.0 RESOURCE CONSERVATION AND RECOVERY ACT CORRECTIVE ACTION

7.1 BACKGROUND

The HSWA significantly revised RCRA by adding requirements under the statutory authority of Section 3004(u). Included in these amendments are requirements for an owner or operator of a RCRA-permitted facility to address releases of hazardous waste constituents from solid waste management units (SWMU), regardless of when the waste was placed in such units. The EPA has proposed to define a SWMU as follows:

> "Any discernable unit at which solid wastes have been placed at any time, irrespective of whether the unit was intended for the management of solid or hazardous waste. Such units include any area at a facility at which solid wastes have been routinely and systematically released."

In the context of the above definition, discernable units are typically identified with the RCRA regulatory program and include landfills, surface impoundments, land treatment units, waste piles, tanks, container storage areas, incinerators, injection wells, wastewater treatment units, waste recycling units, and other physical or biological treatment units (45 FR 145, p. 30798).

The EPA also clarified the types of units that could be expected to fall within the definition of a SWMU. Those areas of a facility where solid wastes have been released in a routine and systematic manner are considered to be SWMUs. On the other hand, a one-time spill or release of a hazardous waste would not be considered to be a routine or systematic release and, thus, would not be considered a SWMU. In identifying SWMUs, the definition of facility includes all contiguous property under the control of the owner or operator of a facility seeking a permit under Subtitle C of RCRA.

7.2 THE CORRECTIVE ACTION PROCESS

The RCRA corrective action process closely parallels the remediation process established under CERCLA. Figure 2 provides a schematic comparison of the RCRA corrective action process and the CERCLA remediation process.

The first phase of the corrective action process is the RCRA Facility Assessment (RFA), which is similar to the Preliminary Assessment/Site Investigation (PA/SI) program regulated under Superfund. In general, the purpose of the RFA is to provide a broad brush overview of available site information and, if possible, sampling efforts to confirm such information. If the Agency determines that a release may have occurred (based on the results of the RFA), the Agency will establish a schedule of compliance that will be included in a facility's RCRA permit.

The second stage of the corrective action program is the RCRA Facility Investigation (RFI). The RFI is undertaken when a potentially significant release has been identified in the RFA. The purpose of the RFI, which is analogous to the Remedial Investigation (RI) process regulated under Superfund, is to characterize the extent of contamination. When the

Figure 2. Comparison of *Resource Conservation and Recovery Act of 1976* Corrective Action and Comprehensive Environmental Response, Compensation, and Liability Act of 1980 Remedial Processes.

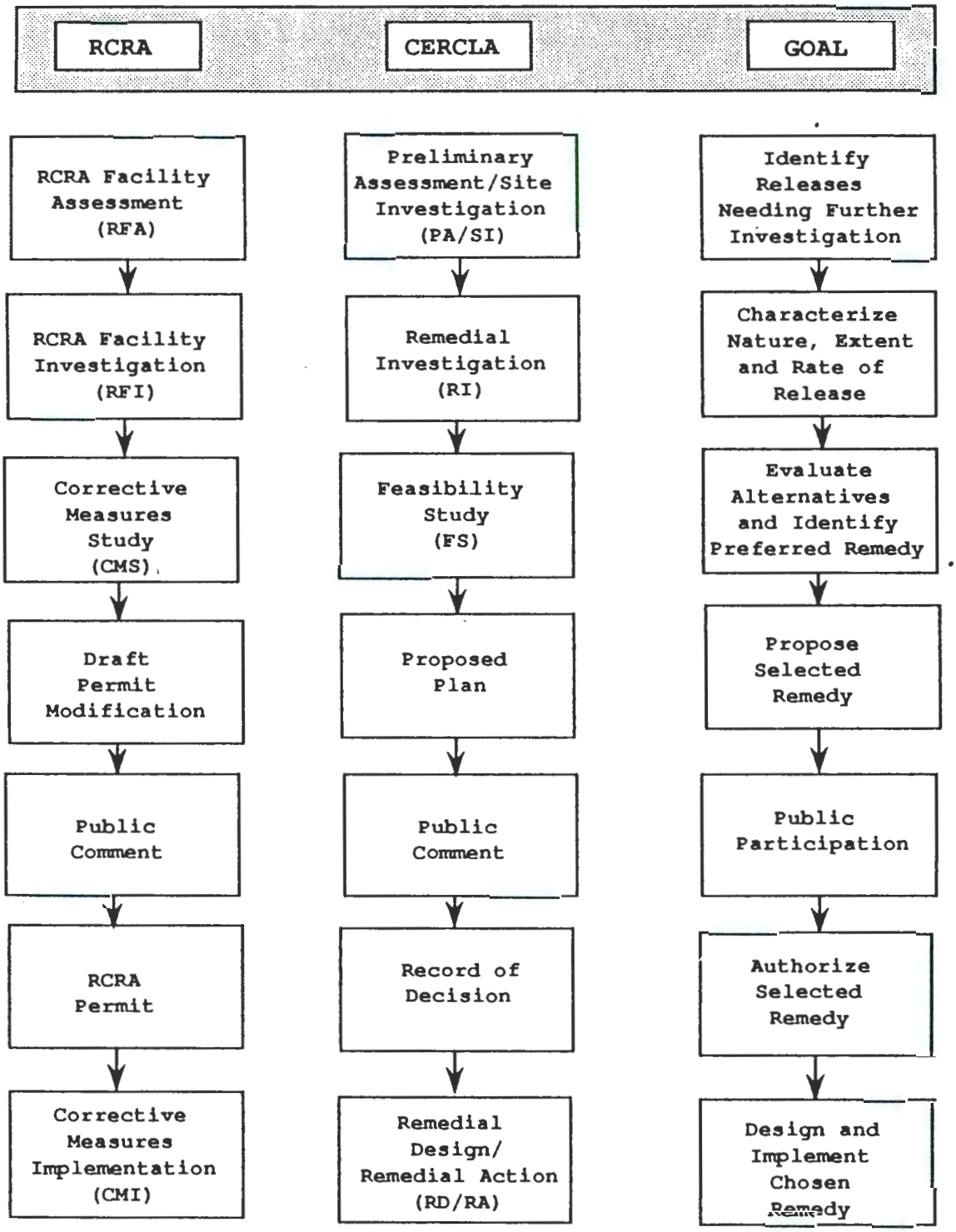

CERCLA = Comprehensive Environmental Response, Compensation, and Liability Act of 1980
RCRA = Resource Conservation and Recovery Act of 1976.

Agency determines that cleanup is likely to be necessary, the owner/operator will be required to conduct a Corrective Measures Study (CMS) to identify a solution for the problems at the site. Under certain circumstances, the Agency may require an "interim measure" at a given facility without waiting for the final result of the RFI or the CMS. These measures will only be undertaken in situations that pose a threat to human health or the environment.

7.3 REGULATED CONSTITUENTS

Section 3004(u) of RCRA requires corrective action for releases of "hazardous wastes or hazardous constituents." The remedial authority under Section 3004(u) is not limited to releases of wastes specifically listed in 40 CFR Part 261 or identified pursuant to the characteristic tests found in that section. In addition to having authority over hazardous waste, the EPA's remedial authority extends to "hazardous constituents" found in Appendix VIII of 40 CFR Part 261 and proposes to include those constituents identified in Appendix IX to 40 CFR Part 261.

7.4 CLEANUP REQUIREMENTS

To facilitate these cleanup goals, the EPA has determined that to be "protective" of human health, the cleanup levels for carcinogens must be equal to or below an upper bound lifetime cancer risk level of 1 in 10,000. As proposed, cleanup levels would be selected within the upper bound of 1×10^{-4} to 1×10^{-6} risk range during the selection of a remedy process. However, remedies at the more protective end of the range would ordinarily be preferred.

For noncarcinogens, cleanup levels would be set at a level at which adverse effects would not be expected to occur. For potentially drinkable groundwater, this would generally be maximum contaminant levels. Soils would be cleaned to a level consistent with plausible future patterns of land use. For example, cleanup to less stringent levels might be appropriate where an industrial site is dedicated to long-term hazardous waste management. The action levels for soils have been established assuming exposure through consumption of soil contaminated with the hazardous constituent of concern.

7.5 DEMONSTRATION OF TECHNICAL IMPRACTICABILITY

The proposed Subpart S regulations would allow the Regional Administrator to make a determination that remediation of a release to meet a specific media cleanup standard is not required when remediation is technically impracticable. To obtain a variance from an established cleanup standard, the owner or operator must provide clear and convincing information that demonstrates the technical impracticability to the Regional Administrator. The concept of technical impracticability may apply to situations in which use of available remedial technologies would create unacceptable risks to workers or surrounding populations or where cleanup would create unacceptable cross-media contamination.

7.6 CONDITIONAL REMEDIES

The proposed Subpart S regulations also allow the EPA to select "conditional" remedies for specific units. A conditional remedy would allow, at EPA's or the authorized State's discretion, an owner or operator to phase-in a remedy over time, as long as certain conditions are met. Generally, a conditional remedy would allow existing contamination to remain within the facility boundary, provided releases that extend beyond the facility boundary are addressed as soon as practicable, continuous releases are controlled, and further onsite migration of hazardous constituents is controlled. According to EPA, conditional remedies may be frequently used at federal facilities due to a combination of factors. These factors may include technical limitations on the ability to achieve complete cleanup at facilities that are extremely large and complex and the unique financial constraints placed on federal facilities by the nature of the federal budget process.

7.7 MANAGEMENT OF CLOSURE DERIVED WASTE

The proposed Subpart S rule indicates that all hazardous wastes that are generated as a result of performing the SWMU investigation must be managed in accordance with RCRA. Land disposal restrictions will be triggered when restricted hazardous wastes are removed from the corrective action management unit (CAMU), treated, and subsequently redeposited at the CAMU or into another land disposal unit. On the other hand, conducting earth-moving operations or excavations within the CAMU does not constitute placement of a hazardous waste in a land disposal unit and will not constitute either creation of a new or replacement unit or a lateral expansion of an existing unit; therefore, the minimum technology requirements for new landfills and lateral expansions or replacement units of existing landfills would not apply. Similarly, hazardous waste that is moved entirely within the CAMU would not be subject to the land disposal restrictions promulgated under 40 CFR Part 268.

7.8 IMPACTS TO THE UNDERGROUND STORAGE TANK-INTEGRATED DEMONSTRATION PROGRAM

The impact to the UST-ID Program from the corrective action regulations will be contingent upon the type of activity being planned and the status of the unit for which the activity is being conducted. For example, demonstration of retrieval equipment in a tank that is an active TSD facility will most likely not be impacted by the RCRA corrective action regulations. In this case, the RCRA regulations applicable to generators and TSD facilities will most likely have the greatest impact on the proposed action.

However, a demonstration that is being conducted in a tank or unit that has been categorized as a past-practice unit may be significantly impacted by these regulations. Depending upon the type of activity planned, it is possible that the EPA may not allow certain activities to be conducted until the RFA and preliminary characterization activities are completed.

8.0 COMPREHENSIVE ENVIRONMENTAL RESPONSE, COMPENSATION, AND LIABILITY ACT OF 1980

8.1 BACKGROUND

The *Comprehensive Environmental Response, Compensation, and Liability Act of 1980* establishes a mechanism to ensure identification and remediation of hazardous substances that have been released to the environment. The CERCLA is a liability-based statute in that those potentially responsible parties, responsible for hazardous substances at a given site, are also financially responsible for the cleanup of such sites. The CERCLA also establishes a fund of money that can be used in cases where potentially responsible parties cannot be identified.

Two of the major regulatory provisions of CERCLA are the National Contingency Plan (NCP) and the release-reporting requirements. The regulations that implement these two major portions of CERCLA are identified at 40 CFR Part 300 and 40 CFR Part 302, respectively. These two major regulatory provisions of CERCLA are discussed in more detail in the following paragraphs.

8.2 NATIONAL CONTINGENCY PLAN

The NCP provides a methodology for evaluating or ranking units from which releases of hazardous substances may adversely impact human health or the environment. Once a hazardous waste disposal site is identified, EPA will conduct a PA/SI. The information obtained from the PA/SI will provide information that can be used to rank the site in accordance with the procedures established in the Hazard Ranking System (HRS) of Appendix A to 40 CFR Part 300. In ranking waste disposal units, the HRS considers, among other things, the nature of the hazardous substances involved, the pathways of exposure to human receptors, depth to groundwater, and other relevant factors. The EPA uses this information to determine whether or not a given waste disposal unit should be added to the National Priorities List (NPL) (54 FR 191, p. 41015) for future remediation.

Those sites that have been placed on the NPL are required to undergo a specific process for evaluating alternatives to remediate the site in question. The CERCLA process begins with an RI. The RI includes the following:

- The collection of data identified during project scoping as necessary to characterize the site and evaluate remedial alternatives
- The characterization of current and potential risks through a baseline risk assessment
- Treatability studies.

During the site characterization, site specific data are collected and assessed to determine what, if any, types of response actions are warranted.

Once the contaminants of concern have been identified, the baseline risk assessment is performed to determine whether the site poses a current or potential risk to human health and the environment.

The second phase of the CERCLA process is the feasibility study (FS). The FS provides the decision makers with an assessment of alternatives and trade-offs in selecting one remediation alternative over another. The first step in the FS process involves developing remedial action objectives for protecting human health and the environment, which should specify contaminants and media of concern. The preliminary remediation goal assists in developing and evaluating remedial alternatives, by establishing initially acceptable contaminant levels for each exposure route.

Once the RI/FS process is completed, the EPA will evaluate the identified remediation alternatives and decide on the appropriate remedial action for the site in question. The final remedial action will be specified in a record of decision, issued by the EPA, that identifies the specified remedial action and the level of cleanup expected to be achieved.

8.2.1 Applicable or Relevant and Appropriate Requirements

The NCP requires remedial actions to comply with applicable or relevant and appropriate requirements (ARAR) to the extent practicable, considering the exigencies of the situation. Applicable requirements are those cleanup standards, standards of control, and other substantive environmental requirements that specifically address a hazardous substance, pollutant, remedial action, or other circumstances at a CERCLA site. Determining whether or not a requirement is both relevant and appropriate requires consideration as well. A requirement is considered to be relevant if it generally pertains to the remedial action in question. A requirement is considered to be appropriate if the requirement is determined to be well suited to the particular site, based on the nature of the hazardous substances, characteristics of the site, and the proposed remedial action.

The LDR regulations are one of the ARARs that warrant attention. According to the LDR regulations, a prohibited waste must be treated either to a specified concentration or by a specified technology before such waste is placed in or on the land for disposal. The EPA has determined a number of actions undertaken that constitute placement of a hazardous waste and, thus, trigger LDR regulations. Placement or disposal of a hazardous waste occurs under the following conditions.

- Wastes from different units are consolidated into one unit (other than a land disposal unit within an area of contamination).
- Waste is removed and treated outside a unit and redeposited into the same or another unit (other than a land disposal unit within an area of contamination).
- Waste is picked up from the unit; treated within the area of contamination in an incinerator, surface impoundment, or tank; and then redeposited into the unit. In situ treatment activities do not constitute placement/disposal and do not trigger LDR regulations.

8.2.2 Administrative versus Substantive Requirements

The EPA has determined that onsite response actions may proceed without obtaining permits (EPA 1988a). The intent of allowing such actions to proceed without permit issuance is to ensure that response actions proceed in a timely manner. This permit exemption applies to all administrative requirements, whether or not they are actually identified as permits. Thus, it is very important to distinguish between administrative and substantive requirements when performing response actions.

The EPA has defined administrative and substantive requirements (EPA 1988a). Substantive requirements are those requirements that pertain directly to actions or conditions in the environment. Examples of substantive requirements include quantitative health-based restrictions, technology-based requirements, and restrictions upon activities in certain special locations. The following are examples of substantive requirements:

- Maximum contaminant levels establishing drinking water standards for particular contaminants
- Incinerator standards requiring particular destruction and removal efficiency
- Standards prohibiting certain types of facilities in a floodplain.

Administrative requirements are defined as those mechanisms that facilitate the implementation of the substantive requirements of a statute or regulation. Requirements that meet the definition of an administrative requirement include the following:

- Approval of, or consultation with, administrative bodies
- Issuance of permits, documentation, and reporting
- Compliance with the 90-day accumulation period within a CERCLA area of contamination.

8.2.3 Waiver From Applicable or Relevant and Appropriate Requirements

Section 121(d)(4) of CERCLA allows the EPA to waiver compliance with ARARs under six conditions. The conditions under which a waiver from compliance with an ARAR is allowed are identified below.

- The selected action is only part of a total remedial action that will comply with ARAR requirements when completed. These types of actions are referred to as interim measures.
- Compliance with the ARAR requirements would present greater health or environmental risks than noncompliance with the ARAR.
- Compliance with the ARAR requirements is technically impracticable from an engineering perspective. The criteria for this waiver

includes engineering feasibility and reliability, with cost generally not a major factor unless compliance would be inordinately costly.

- The selected remedy will attain a "standards of performance" that is equivalent to an ARAR-required standard through use of another "method or approach."

- With respect to a state requirement, the state has not demonstrated consistent application of the requirement in similar circumstances.

- Where the remedy is to be Fund-financed, meeting the ARAR standard would not provide balance between the need for cleanup at the site in question, considering the amount of Fund resources that must be used at other sites in need of cleanup.

8.2.4 Treatability Studies

Treatability studies are often conducted as part of the RI/FS process to gain information about waste treatment technologies that may be used after a record of decision is issued for a given CERCLA unit (EPA 1988b). The types of activities most likely to require treatability testing will be treatment or destruction technologies, such as vitrification, sludge washing, or transuranic extraction of radionuclides. There are several objectives of a treatability study; however, the primary objectives include the following:

- Provide sufficient data to allow treatment alternatives to be fully developed and evaluated to support remedial design of a selected alternative

- Reduce cost and performance uncertainties for treatment alternatives to acceptable levels so that a remedy can be selected.

Treatability testing during the RI/FS process is performed to adequately evaluate a particular technology to support the remedial action selection process. Depending upon the type of testing and evaluation required, the treatability test may be performed on a bench- or pilot-scale level. Bench-scale treatability studies are usually small-scale treatment studies performed in the laboratory. Among others, bench-scale testing may be performed to determine the following:

- Effectiveness of a treatment process on the waste
- Sizing requirements for pilot-scale testing
- Screening technologies to be pilot tested (e.g., sludge washing)
- Compatibility of materials with the waste.

Pilot-scale treatability studies are intended to simulate the physical as well as the chemical parameters of a full-scale process. These types of treatability studies typically use significantly larger volumes of waste and testing equipment as part of the evaluation (EPA 1988b). Pilot-scale treatability studies are performed as close to the actual full-scale treatment process as possible, while maintaining cost effectiveness.

The requirements applicable to treatability studies will vary depending upon the location of where the test is being performed. If the treatability test will be performed onsite, as defined by CERCLA, compliance with the substantive requirements of ARARs will be required. However, permits are not required for onsite activities performed under CERCLA. In the event that the treatability study will not be performed onsite, it may be possible to complete the study under the RCRA allowances for samples undergoing treatability studies or under a RCRA RD&D permit. The details of these two RCRA allowances are discussed in greater detail in Sections 4.4 and 4.5, respectively.

8.3 RELEASE REPORTING REQUIREMENTS

The requirement for reporting the releases of hazardous substances in excess of a reportable quantity (RQ) is the second major provision of CERCLA. These regulations and associated RQs for regulated hazardous substances are identified at 40 CFR Part 302. In summary, an owner or operator of a facility is required to make a notification to the National Response Center (NRC) when a hazardous substance has been released to the environment in excess of an RQ.

In establishing the release-reporting requirements, the EPA included a special provision for facilities that are expected to have continuous releases of hazardous substances in excess of an RQ. The EPA defined a continuous release to be a release of a hazardous substance that is "continuous" and "stable in quantity and rate." For example, a continuous release may be a release that occurs 24 hours a day (such as a radon release from a stock pile), a release that occurs during a certain process (such as benzene released during the production of polymers), or a release that occurs intermittently (such as the release of a hazardous substance from a tank vent each time the tank is filled) (40 CFR Part 302.8). Rather than report every time a release of a hazardous substance in excess of an RQ occurs, the EPA requires the following reporting requirements for continuous releases:

1. Initial notification by telephone to the NRC, the State Emergency Response Commission (SERC), the Local Emergency Planning Committee (LEPC), and initial written notification to the EPA Regional Office, SERC, and LEPC

2. A one-time written follow-up report to the EPA Regional Office

3. Immediate notification of a statistically significant increase to the NRC, SERC, and LEPC

4. Written notification to the EPA Regional Office of any other changes in the release

5. Within 30 days of the first anniversary date of the initial written notification, the owner or operator is required to reassess all reported continuous releases of CERCLA hazardous substances and submit a one-time follow-up report to the appropriate EPA Regional Office.

8.4 IMPACTS TO THE UNDERGROUND STORAGE TANK-INTEGRATED DEMONSTRATION PROGRAM

Impacts to the UST-ID Program from CERCLA regulations will be contingent upon the type of unit in which a demonstration will be performed. Because the regulations that implement the NCP are focused on past-practice units, it is unlikely that the NCP and remedial action process will significantly impact this program. However, the release-reporting requirements will be applicable and must be considered for releases of hazardous substances to the environment in excess of a specified RQ. The potential for releases of hazardous substances is likely to depend upon the types of activity being planned. It is important to note that the CERCLA reporting requirements are not limited to releases of hazardous wastes and include releases to any environmental media.

9.0 REFERENCES

9.1 CODE OF FEDERAL REGULATIONS

40 CFR 60, "Standards of Performance for New Stationary Sources," U.S. Environmental Protection Agency, Washington,D.C.

40 CFR 61, "National Emission Standards for Hazardous Air Pollutants," U.S. Environmental Protection Agency, Washington,D.C.

40 CFR 122, "EPA Administered Permit Programs: The National Pollutant Discharge Elimination System," U.S. Environmental Protection Agency, Washington, D.C.

40 CFR 123, "State Program Requirements," U.S. Environmental Protection Agency, Washington, D.C.

40 CFR 124, "Procedures for Decisionmaking," U.S. Environmental Protection Agency, Washington, D.C.

40 CFR 125, "Criteria and Standards for the Nation Pollutant Discharge Elimination System," U.S. Environmental Protection Agency, Washington, D.C.

40 CFR 260, "Hazardous Waste Management System: General," U.S. Environmental Protection Agency, Washington, D.C.

40 CFR 261, "Identification and Listing of Hazardous Waste," U.S. Environmental Protection Agency, Washington, D.C.

40 CFR 262, "Standards Applicable to Generators of Hazardous Waste," U.S. Environmental Protection Agency, Washington, D.C.

40 CFR 263, "Standards Applicable to Transporters of Hazardous Waste," U.S. Environmental Protection Agency, Washington, D.C.

40 CFR 264, "Standards for Owners and Operators of Hazardous Waste Treatment, Storage, and Disposal Facilities," U.S. Environmental Protection Agency, Washington, D.C.

40 CFR 265, "Interim Status Standards for Owners and Operators of Hazardous Waste Treatment, Storage, and Disposal Facilities," U.S. Environmental Protection Agency, Washington, D.C.

40 CFR 266, "Standards for the Measurement of Specific Hazardous Wastes and Specific Types of Hazardous Waste Management Facilities," U.S. Environmental Protection Agency, Washington, D.C.

40 CFR 267, "Interim Standards for Owners and Operators of New Hazardous Waste Land Disposal Facilities," as amended, U.S. Environmental Protection Agency, Washington, D.C.

40 CFR 268, "Land Disposal Restrictions," U.S. Environmental Protection Agency, Washington, D.C.

40 CFR 270, "EPA Administered Permit Programs; The Hazardous Waste Permit Program," U.S. Environmental Protection Agency, Washington, D.C.

40 CFR 300, "Environmental Protection Agency National Oil and Hazardous Substances Pollution Contingency Plan under the Comprehensive Environmental Response, Compensation, and Liability Act of 1980," U.S. Environmental Protection Agency, Washington, D.C.

40 CFR 302, "Designation, Reportable Quantities, and Notification," U.S. Environmental Protection Agency, Washington, D.C.

40 CFR 302.8, "Reporting Requirements for Continuous Releases of Hazardous Substances," U.S. Environmental Protection Agency, Washington, D.C.

40 CFR 403, "General Pretreatment Regulations for Existing and New Sources of Pollution," U.S. Environmental Protection Agency, Washington, D.C.

40 CFR 1500-1508, "Regulations for Implementing the Procedural Provisions of the National Environmental Policy Act," as amended, Council on Environmental Quality, Washington, D.C.

9.2 PUBLIC LAWS

Atomic Energy Act of 1954, 42 USC 2011, et seq.

Clean Air Act of 1977, 42 USC 7401, et seq.

Clean Water Act of 1977, 33 USC 1251, et seq.

Comprehensive Environmental Response, Compensation, and Liability Act of 1980, 42 USC 9601, et seq.

Hazardous and Solid Waste Amendments of 1984, 42 USC 6912(a), et seq.

National Environmental Policy Act of 1969, 42 USC 4321, et seq.

Nuclear Waste Policy Act of 1982, 42 USC 10101, et seq.

Resource Conservation and Recovery Act of 1976, 42 USC 6901, et seq.

9.3 U.S. DEPARTMENT OF ENERGY ORDERS

DOE Order 5400.1, *General Environmental Protection Program*, U.S. Department of Energy, Washington, D.C.

DOE Order 5400.5, *Radiation Protection of the Public and the Environment*, U.S. Department of Energy, Washington, D.C.

DOE Order 5480.3, *Safety Requirements for the Packaging and Transportation of Hazardous Materials, Hazardous Substances, and Hazardous Wastes*, U.S. Department of Energy, Washington, D.C.

DOE Order 5480.11, *Radiation Protection for Occupational Workers*, U.S. Department of Energy, Washington, D.C.

DOE Order 5481.1B, *Safety Analysis and Review System*, U.S. Department of Energy, Washington, D.C.

DOE Order 5820.2A, *Radioactive Waste Management*, U.S. Department of Energy, Washington, D.C.

DOE Order 6430.1, *General Design Criteria*, U.S. Department of Energy, Washington, D.C.

9.4 DOCUMENTS

DOE, 1990, "Secretary of Energy Notice 15-90," U.S. Department of Energy, Washington, D.C.

EPA, 1988a, *CERCLA Compliance With Other Laws*, U.S. Environmental Protection Agency, Office of Emergency and Remedial Response, Washington, D.C., 20460.

EPA, 1988b, *Guidance for Conducting Remedial Investigations and Feasibility Studies under CERCLA Draft*, U.S. Environmental Protection Agency, Washington D.C., March 1988.

9.5 FEDERAL REGISTER

45 FR 145, "Corrective Action for Solid Waste Management Units at Hazardous Waste Management Facilities; Proposed Rule," p. 30798, U.S. Environmental Protection Agency, Washington, D.C.

52 FR 237, "Hazardous Waste Miscellaneous Units; Standards Applicable to Owners and Operators; Final Rule," p. 46946, U.S. Environmental Protection Agency, Washington, D.C.

54 FR 191, "National Priorities List for Uncontrolled Hazardous Waste Sites," p. 41015, U.S. Environmental Protection Agency, Washington D.C.

57 FR 80, "National Environmental Policy Act Implementing Procedures; Final Rule," p. 15122, U.S. Department of Energy, Washington D.C.

This page intentionally left blank.

APPENDIX A

WASHINGTON STATE REGULATORY REQUIREMENTS

This page intentionally left blank.

CONTENTS

A1.0 BACKGROUND A-1
A1.1 REVIEW OF STATE REGULATIONS A-1
A1.2 INTERAGENCY AGREEMENTS A-2
A1.3 HANFORD SITE A-3
A1.4 TANK SYSTEM OVERVIEW A-5

A2.0 STATE ENVIRONMENTAL ASSESSMENT REGULATIONS A-7
A2.1 STATE ENVIRONMENTAL POLICY ACT OF 1971 . . . . . A-7
A2.1.1 Applicability A-7
A2.1.2 Threshold Determination A-8
A2.1.3 Determination of Nonsignificance A-8
A2.1.4 Mitigated Determination of Nonsignificance A-8
A2.1.5 Impacts to the Underground Storage Tank-Integrated Demonstration Program A-9

A3.0 STATE AIR EMISSION REGULATIONS A-9
A3.1 RADIATION PROTECTION--AIR EMISSIONS A-9
A3.1.1 Applicability A-9
A3.1.2 Registration of Radionuclide Emission Sources . . . A-10
A3.1.3 Airborne Radionuclide Emission Permits A-10
A3.1.4 New and Modified Sources of Airborne Radionuclide Emissions A-10
A3.1.5 Impacts to the Underground Storage Tank-Integrated Demonstration Program A-11
A3.2 GENERAL REGULATIONS FOR AIR POLLUTION SOURCES A-11
A3.2.1 Applicability A-11
A3.2.2 Impacts to the Underground Storage Tank-Integrated Demonstration Program A-12
A3.3 CONTROLS FOR NEW SOURCES OF TOXIC AIR POLLUTANTS A-12
A3.3.1 Applicability A-14
A3.3.2 Notice of Construction A-14
A3.3.3 Second Tier Analysis A-15
A3.3.4 Impacts to the Underground Storage Tank-Integrated Demonstration Program A-15

A4.0 STATE HAZARDOUS WASTE MANAGEMENT REGULATIONS A-16
A4.1 WASHINGTON STATE DANGEROUS WASTE REGULATIONS A-16
A4.2 IDENTIFICATION OF DANGEROUS WASTE A-16
A4.2.1 Toxic Dangerous Wastes A-17
A4.2.2 Persistent Dangerous Waste A-17
A4.2.3 Carcinogenic Dangerous Waste A-18
A4.3 STATE OF WASHINGTON REQUIREMENTS FOR "TREATMENT-BY-GENERATOR" A-18
A4.3.1 Dangerous Waste Treatment in Accumulation Tanks or Containers A-18
A4.3.2 Elementary Neutralization of Dangerous Waste . . . A-19
A4.4 LAND DISPOSAL RESTRICTIONS A-19
A4.5 IMPACTS TO THE UNDERGROUND STORAGE TANK-INTEGRATED DEMONSTRATION PROGRAM A-20

CONTENTS (cont)

A5.0 STATE WASTEWATER DISCHARGE REGULATIONS A-21
A5.1 CITY OF RICHLAND SEWER DISCHARGE LIMITS A-21
A5.1.1 Applicability A-21
A5.1.2 Discharge Limitations A-21
A5.1.3 Discharge Permits A-22
A5.1.4 Impacts to the Underground Storage Tank-Integrated Demonstration Program A-22
A5.2 STATE WASTE DISCHARGE PERMIT PROGRAM A-23
A5.2.1 Applicability A-23
A5.2.2 Permit Requirements A-23
A5.2.3 Impacts to the Underground Storage Tank-Integrated Demonstration Program A-24
A5.3 SUBMISSION OF PLANS AND REPORTS FOR CONSTRUCTION OF WASTEWATER FACILITIES A-24
A5.3.1 Applicability A-24
A5.3.2 Impacts to the Underground Storage Tank-Integrated Demonstration Program A-25

A6.0 OTHER RELEVANT REQUIREMENTS A-25
A6.1 WYDEN AMENDMENTS A-25
A6.1.1 Applicability A-25
A6.1.2 Constraints Associated With Watch-List Tanks . . . A-27
A6.1.3 Impacts to the Underground Storage Tank-Integrated Demonstration Program A-27

A7.0 REFERENCES A-27
A7.1 CODE OF FEDERAL REGULATIONS A-27
A7.2 DOCUMENTS A-28
A7.3 FEDERAL REGISTER A-28
A7.4 PUBLIC LAWS A-28
A7.5 WASHINGTON (STATE) ADMINISTRATIVE CODE A-29

LIST OF FIGURES

A-1 Hanford Site A-4

A-2 Typical Design of Single-Shell Tanks A-6

LIST OF TABLES

A-1 State Permits and Approvals Potentially Applicable to the Underground Storage Tank-Integrated Demonstration Program A-2

A-2 Source Categories Requiring Registration (WAC 173-400-100) A-13

ACRONYMS

APCA	Air Pollution Control Authority
ASIL	acceptable source impact levels
ASTM	American Society for Testing Materials
BACT	best available control technology
BARCT	best available radionuclide control technology
CFR	*Code of Federal Regulations*
DNS	determination of non-significance
DOE	U.S. Department of Energy
DOH	Washington State Department of Health
DS	determination of significance
DST	double-shell tank
EC	equivalent concentration
Ecology	Washington State Department of Ecology
EIS	environmental impact statement
ENU	elementary neutralization unit
EPA	U.S. Environmental Protection Agency
FR	*Federal Register*
HH	halogenated hydrocarbon
IARC	International Agency for Research on Cancer
LDR	land disposal restriction
mrem	millirem
NEPA	*National Environmental Policy Act of 1969*
NESHAP	National Emission Standards for Hazardous Air Pollutant
NIOSH	National Institute for Occupational Safety and Health
NOC	notice of construction
NPDES	National Pollutant Discharge Elimination System
PAH	polycyclic aromatic hydrocarbon
POTW	publicly owned treatment works
PUREX	Plutonium/Uranium Extraction
RCRA	*Resource Conservation and Recovery Act of 1976*
RMW	radioactive mixed waste
SA	safety assessment
SEPA	*State Environmental Policy Act of 1971*
SIC	standard industrial classification
SST	single-shell tank
T-BACT	best available control technology for toxics
TAP	toxic air pollutant
TBG	treatment-by-generator
Tri-Party Agreement	*Hanford Federal Facility Agreement and Consent Order*
UST-ID	Underground Storage Tank-Integrated Demonstration
WAC	*Washington State Administrative Code*

Metric Conversion Chart

English Units	Multiply By	Equals
Length		
inches	2.54	centimeters
feet	0.3048	meters
miles	1.6093	kilometers
Volume		
gallons	3.786	liters

This page intentionally left blank.

A1.0 BACKGROUND

A1.1 REVIEW OF STATE REGULATIONS

This appendix is a supplement to the baseline regulatory requirements identified in Sections 1.0 through 8.0 of this document. The State of Washington has adopted several state regulations that are more stringent than their corresponding federal regulations. Therefore, in addition to evaluating potential impacts from federal regulations, the Underground Storage Tank-Integrated Demonstration (UST-ID) Program's development and demonstration activities must be reviewed against state regulations to identify additional impacts to this program. This review has been focused on those State of Washington regulations that require preconstruction notification, permits, or other approvals, which, if not addressed, will impede progress to the UST-ID Program.

Table A-1 has been prepared to allow a person to easily identify the regulatory and permitting requirements applicable to a given project, depending on the type of activity involved. In most cases, "activity" refers to the type of emission generated by a given project (e.g., air emissions, wastewater discharges, etc.). For example, a project that can be expected to increase radionuclide airborne emissions (e.g., performing waste retrieval activities) can ascertain from Table 1 that an evaluation of the *Washington (State) Administrative Code* (WAC) 246-247 will be required. In addition to identifying the applicable regulatory requirement, this table identifies the lead regulatory authority and the associated constraints (i.e., preconstruction approval, operating permit, etc.).

The Washington State Department of Ecology (Ecology) is the lead regulatory authority for most of the activities identified in Table A-1. However, other regulatory authorities have been delegated the authority to implement certain regulations within the State of Washington:

- "Radiation Protection--Air Emissions," WAC 246-247, are implemented by the Washington State Department of Health (DOH)

- "Controls for New Sources of Air Pollutants," WAC 173-460, are implemented by the Benton-Franklin-Walla Walla Air Pollution Control Authority (APCA).

This appendix also provides a discussion of two regulatory requirements that are not implemented by the State of Washington or the U.S. Environmental Protection Agency (EPA). First, the city of Richland is responsible for issuing wastewater pretreatment permits for discharges to the city's wastewater collection and treatment system. Secondly, Congress has passed legislation establishing requirements applicable to certain "watch-list" tanks at the Hanford Site (Public Law 101-510, Section 3137). Because accessing these tanks requires special consideration, these regulatory requirements have also been included in this appendix.

Table A-1. State Permits and Approvals Potentially Applicable to the Underground Storage Tank-Integrated Demonstration Program.

Activity	Permit or approval	Regulation*	Regulatory agency	Restriction
Air emissions	Radiation Air Emissions Permit	WAC 246-247	Department of Health	Construction/ operation
	New Source Review	WAC 173-400	Ecology	Construction
	Toxic Air Pollutants	WAC 173-460	Air Pollution Control Authority	Construction
Soil column wastewater disposal	State Waste Discharge Permit	WAC 173-216	Ecology	Construction
	Approval of engineering plans, reports, and specifications	WAC 173-240	Ecology	Construction
Domestic wastewater disposal	Pretreatment Permit	City Ordinance Number 35-84	City of Richland	Discharge to city sewage facility
Dangerous waste management	Dangerous Waste Permit (Part A and B)	WAC 173-303	Ecology	Construction/ operation
Assessing environmental impacts	SEPA Checklist or EIS	WAC 197-11	Ecology	Permit approval
Accessing watch-list tanks	Environmental Assessment, Safety Evaluation, Engineering Evaluation of Alternatives	Public Law 101-510, Section 3137	DOE	Accessing watch-list tanks

WAC = Washington (State) Administrative Code
Ecology = Washington State Department of Ecology
SEPA = State Environmental Policy Act of 1971
EIS = Environmental Impact Statement
DOE = U.S. Department of Energy.
* = References are found in Section A7.0.

A1.2 INTERAGENCY AGREEMENTS

Approximately 1,400 waste management units have been created at the Hanford Site since plutonium production began in 1943. The *Hanford Federal Facility Agreement and Consent Order* (hereafter referred to as the Tri-Party Agreement [Ecology et al. 1990]) establishes a schedule for permitting or closing treatment, storage, or disposal facilities and performing remedial actions under the provisions of Section 3004(u) of the *Resource Conservation and Recovery Act of 1976* (RCRA) or the *Comprehensive Environmental Response, Compensation, and Liability Act of 1980*. Waste management units at the Hanford Site have been grouped into 78 operable units. These operable units were developed based on the general patterns of waste disposal from specific process sources, spatial relationship to other waste management units, and the physical characteristics of the area, among other things.

As with other waste management units at the Hanford Site, the single-shell tanks (SST) have been divided into operable units. The tanks and associated ancillary equipment have been categorized into six operable units. According to the Tri-Party Agreement, the tanks, ancillary equipment and soil contaminated by leaks from the tanks will be closed in accordance with RCRA.

The SST operable units also contain additional waste management units that are regulated under Section 3004(u) of RCRA. These units are classified as RCRA past-practice units and consist of diversion boxes, catch tanks, receiving vaults, and spills from these units. These units will be investigated through the RCRA past-practice process as discussed in detail in Section 7.0 of this document.

The Tri-Party Agreement establishes specific milestones associated with the SSTs. The major milestones associated with closure of the SSTs are identified below as follows:

- M-05-00--Complete SST interim stabilization by September of 1995
- M-06-00--Complete SST waste retrieval technology and complete scale-model testing by June of 1994
- M-07-00--Initiate full-scale demonstration of waste retrieval technology by October of 1997
- M-08-00--Initiate full-scale tank farm closure demonstration project by June of 2004
- M-10-00--Complete analyses of at least two complete core samples from each SST by September of 1998.

As discussed above, the Tri-Party Agreement governs closure of waste management units at the Hanford Site. The above milestones are not clearly defined in all cases. Therefore, the criteria used to establish the above milestones should be reviewed for any UST-ID Program activity being developed to meet or support a Tri-Party Agreement milestone. This will ensure that all performance objectives are met. In some cases, it may be necessary to negotiate specific performance criteria with Ecology or the EPA. For example, milestone M-07-00 requires full-scale demonstration of waste retrieval technology. The goal of this milestone is to retrieve no less than 95 percent of the tank waste. Subsequent decisions on the appropriate disposal of the waste tanks, contaminated piping, and contaminated soils will follow detailed characterization and regulatory agency approval as part of the closure process.

A1.3 HANFORD SITE

In 1943, the U.S. Army Corps of Engineers selected the Hanford Site as the key location for producing nuclear materials, mainly plutonium, in support of the United States' World War II Manhattan Project effort. Since that time, this area has been dedicated to nuclear material production, diverse research, and waste management activities. The Hanford Site facilities were first built and operated by the U.S. Army Corps of Engineers and subsequently operated by the Atomic Energy Commission, the Energy Research and Development Administration and finally by the U.S. Department of Energy (DOE).

As illustrated in Figure A-1, the Hanford Site consists of approximately 560 square miles (1,450 square kilometers) and is divided into four major areas. The 100 and 200 Areas consist of the eight production reactors and the

Figure A-1. Hanford Site.

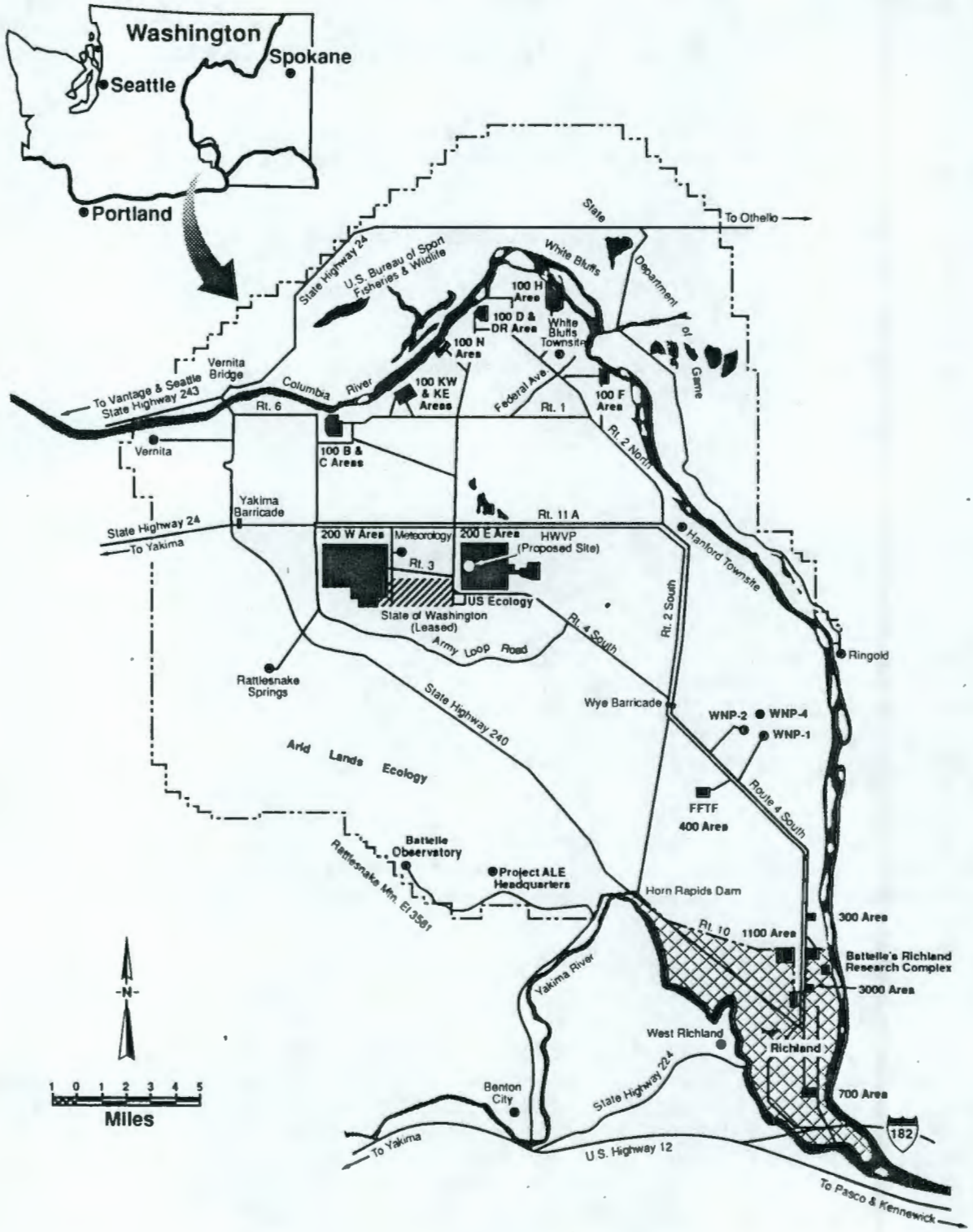

79010036.1 B&W

chemical separation facilities, respectively. The 200 Area has been divided into the 200 East and West Areas. The 200 East Area contains two major chemical processing facilities: the Plutonium Uranium Extraction Plant and B Plant, as well as six SST farms. The 200 West Area consists of three major chemical processing facilities: T Plant, U Plant and the Plutonium Finishing Plant, as well as six SST farms. In addition, the fuels fabrication and research facilities and the Fast Flux Test Facility are located at the 300 and 400 Areas, respectively.

A1.4 TANK SYSTEM OVERVIEW

Between 1943 and 1964, 149 SSTs were built for the storage of radioactive wastes at the Hanford Site. These SSTs are located in 12 tank farms of 4 to 18 tanks each in the 200 East and 200 West Areas. Wastes have not been added to the SSTs since November 1980. However, water is added to two tanks for evaporative cooling purposes. Pumpable interstitial liquid and supernatant wastes are removed from the SSTs and transferred to the double-shell tanks (DST). The DSTs are a tank-in-tank design and were placed into service in 1971.

One hundred and thirty three of the SSTs are 75 feet in diameter and 29.75 to 54 feet high (at their highest points) with nominal capacities of 500,000 to 1,000,000 gallons. Sixteen of the tanks are smaller units of similar design and are 20 feet in diameter and 25.5 feet high with capacities of 55,000 gallons. Figure A-2 shows the dimensions of the various SSTs.

The SSTs are constructed of carbon steel, American Society for Testing Materials (ASTM) A283 Grade C or ASTM A201 Grade C (241-AX Tank Farm), lining the bottom and sides of a reinforced concrete shell. The bottoms of most tanks are slightly concaved. The tanks are belowgrade with at least 6 feet of soil cover that provides shielding and minimizes radiation exposure to operating personnel. Inlet and overflow lines are located near the top of the liner. Most of the 500,000- and 750,000-gallon tanks were built in "cascades" of three or four tanks. Waste was transferred to the first tank of the cascade and allowed to overflow into successive tanks of the cascade through piping in the side walls (Winters et al. 1990).

Interim stabilization and isolation activities for the SSTs are continuing. Interim stabilization involves the removal of supernatant and interstitial liquid from the SSTs to minimize the spread of contamination if the tanks begin to leak. The SSTs containing greater than 50,000 gallons of drainable liquid or more than 5,000 gallons of free-standing supernatant are pumped. The SSTs containing less than this amount are not pumped as it would result in no significant decrease in risk to public health and the environment. The liquid in the tanks is pumped to the extent technically and economically feasible. Isolation of an SST involves physical modification to preclude the inadvertent addition of liquids to a given tank. Currently, the SSTs contain approximately 37 million gallons of radioactive mixed waste.

Figure A-2. Typical Design of Single-Shell Tanks.

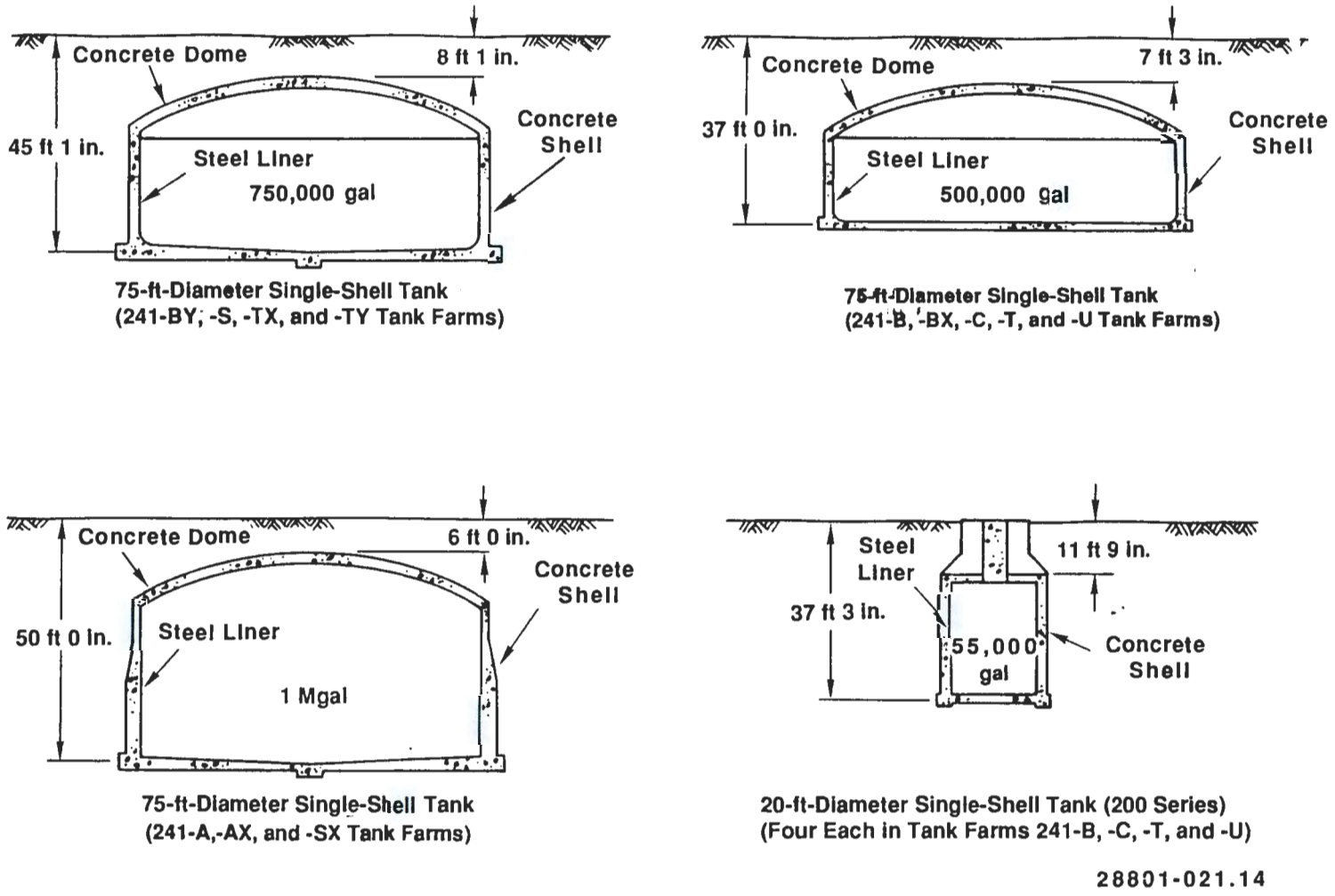

A2.0 STATE ENVIRONMENTAL ASSESSMENT REGULATIONS

A2.1 STATE ENVIRONMENTAL POLICY ACT OF 1971

In addition to meeting the regulatory requirements of the *National Environmental Policy Act of 1969* (NEPA), certain activities may also require an evaluation of environmental impacts, as required by the *State Environmental Policy Act of 1971* (SEPA). The SEPA requirements are implemented in the State of Washington by Ecology to ensure that environmental impacts are considered by state and local governmental officials when making permitting decision. The SEPA is legislation that requires an evaluation of environmental impacts associated with a given project before Ecology can make a decision on permit approval. The implementing regulations of SEPA have been codified at WAC 197-11.

A2.1.1 Applicability

The requirements of SEPA apply to any project or proposal that meets the definition of an "action" in the SEPA rules. The SEPA rules define an "action" at WAC 197-11-704 as being either project or nonproject actions. Project actions involve a decision on a specific project, such as a construction or management activity located in a defined geographic area. Projects are included and are limited to Ecology's decision to license, fund, or undertake any action that will directly modify the environment. In summary, any action requiring a permit approval will require a SEPA evaluation. Nonproject actions are not relevant to the UST-ID Program activities and, thus, will not be discussed further.

As discussed above, SEPA requirements are triggered when a covered action is proposed that requires permit approval from Ecology. The SEPA compliance must be completed before Ecology makes a decision on a permit, and a SEPA checklist must accompany the permit when transmitted to Ecology for approval. A permit may be conditioned or denied based upon information contained in the SEPA checklist or subsequent SEPA documentation. Compliance with SEPA is required for covered actions in addition to the normal permits or approvals that may be required for a given project. A standard SEPA checklist is provided at WAC 197-11-960.

It is important to note that certain actions are categorically exempt from the SEPA evaluation process per WAC 197-11-800. These categorical exemptions apply to specific projects and include, among other things, minor new construction and certain repair, remodeling, and maintenance activities. No further action is required on the part of the permittee for an activity that is determined to be categorically exempt from the SEPA evaluation process. In addition, Ecology is not required to document that a proposal is categorically exempt but may note on a permit application that a given proposal is categorically exempt or place such a determination in their files, as stated at WAC 197-11-305(2).

A2.1.2 Threshold Determination

When a SEPA evaluation is required for a given project, Ecology will make a threshold determination by deciding if the project is likely to have significant adverse impacts on the environment. If Ecology determines that a project will have significant adverse environmental impacts, an environmental impact statement (EIS) will be required. If the project in question will not have significant adverse environmental impacts or if the impacts can be mitigated, a determination of nonsignificance (DNS) will be issued by Ecology.

The requirements for making a threshold determination are identified at WAC 197-11-330. The threshold determination is usually based on a review of the SEPA checklist. As part of the threshold determination process, Ecology should determine whether all or part of the proposal and associated impacts have been analyzed in a previously prepared environmental document, which could be incorporated by reference. In the past, Ecology has accepted environmental assessments and EISs as being equivalent to SEPA requirements and has not required additional SEPA evaluations or documentation.

A2.1.3 Determination of Nonsignificance

In the event that Ecology determines that a proposal will not have probable significant adverse environmental impacts, a DNS will be issued. Under certain circumstances identified at WAC 197-11-340(2)(a), a DNS must be issued with a 15-day comment period. The date of issuance for the DNS is the date the DNS is sent to Ecology, affected tribes, and the public.

If the proposed project does not meet the criteria of WAC 197-11-340(2)(a), the DNS may be issued without undergoing the public comment period. In this case, public notice is not required nor must the DNS be circulated to those groups identified above.

A2.1.4 Mitigated Determination of Nonsignificance

The WAC 197-11-350 allows clarifications or changes to be made to a proposal before making the threshold determination. After submittal of a SEPA checklist and before Ecology's threshold determination, an applicant may request Ecology to make a preliminary determination as to whether a determination of significance (DS) will be issued. If Ecology indicates that a DS is likely to be issued, the applicant may clarify or change features of the proposal to mitigate impacts to the environment, which led to the determination of a DS. Ecology will then make its threshold determination based upon the changed or clarified proposal. If the proposal is clarified, changed, or conditioned to include measures that reduce impacts to the environment, Ecology may issue a mitigated DNS. If, however, a given proposal continues to have probable significant adverse environmental impacts, even with mitigation measures, an EIS will be required.

A2.1.5 Impacts to the Underground Storage Tank-Integrated Demonstration Program

As discussed above, SEPA documentation requirements are triggered when a covered action requires permit approval from Ecology. Where permit approvals are required, a SEPA checklist, at a minimum, will be required before Ecology can make a determination on the permit in question. In some cases, Ecology may determine that a proposed action will have significant environmental impacts. In this case, an EIS may be required. Any activity associated with the UST-ID Program should undergo a thorough regulatory and permitting review to determine the applicability of SEPA to a given project. As discussed above, permitting determinations cannot be made until the appropriate level of SEPA documentation has been accomplished.

A3.0 STATE AIR EMISSION REGULATIONS

A3.1 RADIATION PROTECTION--AIR EMISSIONS

The DOH has established airborne radionuclide emission standards at WAC 246-247. The requirements of WAC 246-247 establish procedures for monitoring, controlling, and reporting airborne radionuclide emissions from specified sources. At this time, the DOH has not delegated EPA's authority to implement the federal radionuclide National Emissions Standards for Hazardous Air Pollutants (NESHAP). However, the air emission regulations of WAC 246-247 remain applicable as a matter of state law and will implement the requirements of the NESHAPs when the DOH receives delegation of authority from the EPA.

A3.1.1 Applicability

The WAC 246-247 establishes the requirements applicable to airborne radionuclide emissions from specified sources, including DOE facilities by reference, as discussed above. The Ecology ambient air quality standards require that emissions of radionuclides to the air shall not cause a dose equivalent of more than 10 millirem (mrem) per year effective dose equivalent to any member of the public. These standards are consistent with the EPA's NESHAP regulations, identified at 40 *Code of Federal Regulations* (CFR) Part 61, Subpart H.

The requirements of WAC 246-247 require the use of best available radionuclide control technology (BARCT) for the construction, installation, or establishment of a new source subject to those requirements. The BARCT is defined, according to WAC 246-247-030(1), as follows:

> "BARCT means technology which will result in a radionuclide emission limitation based on the maximum degree of reduction for radionuclides which would be emitted from any proposed stationary source or modification of a source which the permitting authority on a case-by-case basis, taking into account energy, environmental, and economic impacts and other costs, determines is achievable for such source or modification through application of production processes or available methods,

systems, and techniques. In no event shall application of BARCT result in emissions of radionuclides which would exceed the ambient annual standard limitation specified in this chapter."

A3.1.2 Registration of Radionuclide Emission Sources

According to WAC 246-247-050, the owner or operator of each source of airborne radionuclide emissions, including DOE facilities, shall register the source of the emission with the DOH. Operators are required to register airborne radionuclide emission sources on specific forms to be supplied by the DOH. Upon a determination that registration of a particular source meets Ecology and DOH regulations, the DOH will issue a permit authorizing the emission source with such appropriate terms and limitations as deemed necessary.

A3.1.3 Airborne Radionuclide Emission Permits

According to WAC 246-247-060, each operator of airborne radioactive emission sources is required to obtain a permit from the DOH to operate those sources. The DOH may only issue a permit after the appropriate registration has been received and applicable fees have been paid. For the purposes of issuing permits at the Hanford Site, the DOH has issued one permit for the entire Hanford Site.

A3.1.4 New and Modified Sources of Airborne Radionuclide Emissions

The WAC 246-247-070 establishes notice of construction requirements for new sources and modifications to existing sources. Construction of any source requiring registration, which is expected to increase airborne radioactive emissions, may not begin until a notice of construction has been approved. In addition, the operator of any source requiring registration must also notify the DOH before replacing radioactive emission control equipment or process equipment other than for routine maintenance and repair. In some cases, however, the DOH may determine that a notice of construction is required for routine maintenance and repair activities. These determinations will be made on a case-by-case basis. The WAC 246-247-070 refers to the notice of construction approval established by the federal NESHAP regulations at 40 CFR Part 61.07. The construction, installation, or establishment of a new regulated source of emissions shall use BARCT.

In addition to regulating new sources of airborne radionuclide emissions, the WAC 246-247 also requires a notice of construction for modifications to existing sources of airborne radionuclide emissions. In addition, these regulations indicate that any modification to an existing source that will significantly change potential radionuclide emissions or the dose equivalent to any member of the public will require the proposed project to use BARCT for emission control.

A3.1.5 Impacts to the Underground Storage Tank-Integrated Demonstration Program

As discussed above, the regulations of WAC 246-247 establish the state regulations governing airborne radionuclide emissions. Any physical or operational change that results in a new emission source or increases the rate of airborne radionuclide emissions will require a notice of construction before initiating such activity. All modifications to an existing source will require the use of BARCT. In addition, the owner or operator of existing sources of airborne radionuclide emissions is required to register those sources with the DOH. Activities associated with the UST-ID Program will be required to determine the applicability of these regulations for any activity resulting in any increase of radionuclide emissions.

A3.2 GENERAL REGULATIONS FOR AIR POLLUTION SOURCES

The State of Washington has established general air pollution standards for specific source categories at WAC 173-400. These general emission standards are identified at WAC 173-400-040 and include limits for visible emissions, odors, particulate matter, fugitive emissions, and sulfur dioxide, among other things. The WAC 173-400-075 identifies those source categories that are required to comply with these general emission standards. Included in this list of categories are those sources that emit a contaminant subject to a NESHAP, as specified at 40 CFR Part 61.

A3.2.1 Applicability

Because radionuclides are regulated by 40 CFR Part 61, Subpart H, and WAC 246-247 as hazardous air pollutants, it would appear as though these regulations are applicable. However, for the purposes of airborne radionuclide emissions, compliance with 40 CFR Part 61 and WAC 246-247 will ensure compliance with the requirements of WAC 173-400. Therefore, additional registration and notice of construction to meet the requirements identified in these regulations are not required for the purposes of radionuclide air emissions.

In addition to radionuclides, the 40 CFR Part 61 identifies additional hazardous air pollutants including the following:

- Asbestos
- Benzene
- Beryllium
- Coke Oven Emissions
- Inorganic Arsenic
- Mercury
- Vinyl Chloride.

Any project associated with the UST-ID Program that is identified as a source category per WAC 173-400-115 and that causes an increase in airborne emissions of one or more of the above hazardous air pollutants will require registration with Ecology. Construction is not allowed to begin on any new source that is required to register until a notice of construction has been approved by

Ecology. In addition, the owner or operator of any source that is required to register with Ecology is required to provide notification before replacing any air pollution control equipment or process equipment other than for routine maintenance and repair.

A3.2.2 Impacts to the Underground Storage Tank-Integrated Demonstration Program

As discussed above, any new source or modification to an existing source of airborne radionuclide emissions is subject to regulation per 40 CFR Part 61, Subpart H and WAC 246-247. Compliance with the registration and notice of construction requirements of WAC 246-247 will ensure compliance with WAC 173-400 for radionuclides. It is unlikely that any activity, other than the emission of radionuclides, associated with the UST-ID Program would be classified as a source category subject to regulation per WAC 173-400. A review of the list of source categories at WAC 173-400-100 indicates that it is unlikely that projects associated with the UST-ID Program will fall within one of the categories requiring registration, except as discussed above for radionuclide emissions. However, Table A-2 has been included and should be reviewed to verify this for all projects associated with the UST-ID Program.

A3.3 CONTROLS FOR NEW SOURCES OF TOXIC AIR POLLUTANTS

The regulations of WAC 173-460 limit emissions of approximately 690 toxic air pollutants (TAP). These regulations require use of the best available control technology (BACT) for any new source or modified source with increasing emissions. Also, the BACT for toxics (T-BACT) is required for all new sources of TAPs and modified sources with increasing toxic emissions. After the control requirements are determined, the owner or operator of the source is required to calculate how much of each TAP would be emitted using a given technology. This would result in an estimate of the resulting level of outdoor pollutants that would be emitted from a given source.

After emissions from the source have been estimated, a determination is made whether the source is above or below the corresponding acceptable source impact level (ASIL). If the source of the TAP is below the ASIL, the source can be permitted. Class A and Class B TAPs and their corresponding ASILs are identified at WAC 173-460-150 and -160, respectively. An ASIL for any Class A TAP will be determined using an acceptable cancer risk level (1 in 1,000,000), while Class B ASILs will be based on thresholds for toxic effects. If a facility cannot demonstrate Class A or Class B TAP source compliance, the regulations have provisions for petitioning Ecology to perform a second tier analysis to determine the risk from the source under certain circumstances.

Table A-2. Source Categories Requiring Registration (WAC 173-400-100).*

1. Agricultural drying and dehydrating operations
2. Asphalt plants
3. Beverage can surface coating operations
4. Bulk gasoline terminals
5. Cattle feedlots with facilities for 1,000 or more cattle
6. Chemical plants
7. Ferrous foundries
8. Fertilizer plants
9. Flexible vinyl and urethane coating and printing operations
10. Grain handling, seed processing, pea and lentil processing facilities
11. Metallic mineral processing plants
12. Mineralogical processing plants
13. Nonferrous foundries
14. Other metallurgical processing plants
15. Petroleum refineries
16. Power boilers using coal, hog fuel, oil, or other solid or liquid fuel
17. Pressure sensitive tape and label surface coating operations
18. Rendering plants
19. Scrap metal operations
20. Synthetic organic chemical manufacturing industries
21. Sulfuric acid plants
22. Synthetic fiber production facilities
23. Veneer dryers
24. Wood waste incinerators including wigwam burners
25. Other incinerators designed for a capacity of 100 pounds per hour or more
26. Stationary internal combustion engines rated at 500 horse power or more
27. Sawmills, including processing for lumber, plywood, shake, shingle, pulpwood insulating board, or any combination thereof
28. Any category of stationary sources to which a federal standard of performance applies
29. Any source that emits a contaminant subject to a National Emission Standard for Hazardous Air Pollutants
30. Any major source or major emissions unit.

*WAC 173-400, "General Regulations of Air Pollution," Washington State Department of Ecology, Olympia, Washington.

A3.3.1 Applicability

The regulations of WAC 173-460 apply to new or modified sources of TAPs that are specifically identified or that fall within a specified standard industrial classification (SIC), as identified at WAC 173-460-030(b). Categories of potential sources that may be impacted by these regulations include, among others, the following:

- National security (SIC 9711)
- Sites subject to cleanup regulation
- Sites subject to regulation under WAC 173-400-100.

Any new or modified source determined to fall within one of the SICs identified above requires an evaluation to determine the appropriate level of emissions control technology. A new source is defined as the construction or modification of a stationary source that increases emissions or ambient air concentrations of any regulated air pollutant including TAPs or that results in the emission of any contaminant not previously emitted. A modification is defined as any physical change in, or change in operation of, a stationary source that increases the amount of any contaminant emitted by that source or that results in the emission of any contaminant not previously addressed.

The regulations at WAC 173-460-030 also specifically exempt certain emission sources including, among others, the following:

- Containers such as tanks, barrels, drums, cans, and buckets, unless equipped with a vent other than those required solely as safety pressure release devices

- Nonprocess fugitive emissions of TAPs from stationary sources, such as construction sites, unpaved roads, coal piles, waste piles, and fuel and ash handling operations

- Process vents subject to 40 CFR Parts 264 and 265, Subpart AA.

A3.3.2 Notice of Construction

An owner or operator of a new TAP source, as discussed above, is required to notify the Benton-Franklin-Walla-Walla APCA before the construction, installation or establishment of a new TAP source and file a notice of construction (NOC) application for the proposed emission unit(s). The NOC must be approved before the construction, installation, or establishment of a new TAP source may occur.

According to WAC 173-460(3), within 30 days of receipt of the NOC, the APCA may require the submittal of additional plans, specifications, and other information necessary for the review of the proposed new or modified source. The APCA will review the NOC and associated plans to ensure that the source will use emission controls meeting T-BACT for TAPs, which are likely to increase, and reasonable control technology for toxics for TAPs, which are likely to remain the same or decrease.

A3.3.3 Second Tier Analysis

In the event that an applicant cannot demonstrate Class A or Class B TAP source compliance, the regulations at WAC 173-460-090 include provisions for petitioning Ecology to perform a second tier analysis to determine the risk associated with a given project. In this case, rather than the APCA, Ecology will review the second tier analysis. The second tier analysis consists of a health impact assessment that must be prepared in accordance with EPA's risk assessment guidelines, as defined in WAC 173-460-020(8). Based upon a review of the second tier analysis, Ecology may approve the emissions of TAPs only if a determination has been made that emission controls represent at least T-BACT. In addition, the applicant must demonstrate that emissions of Class A TAPs are not likely to result in an increased cancer risk of more than 1 in 100,000.

In the event that emissions of a Class A TAP are expected to result in an increased cancer risk of more than 1 in 100,000, the owner or operator may submit a request for a risk management decision. Approval of a request for risk management decision will be based upon the following criteria.

- The proposed emission controls represent all known available and reasonable technology.
- Application of all known available toxic air pollution prevention methods has been employed to reduce, avoid, or eliminate toxic air pollutants before their generation, including recycling, chemical substitution, and efforts to redesign processes.
- The proposed changes will result in a greater benefit to the environment as a whole.

If the request for a risk management decision is approved by Ecology and the permitting conditions are approved by the permitting authority, then the NOC will be approved. It is important to note, however, that the NOC may be denied if the risk management decision is approved, but the permitting authority denies approval of the associated permitting conditions.

A3.3.4 Impacts to the Underground Storage Tank-Integrated Demonstration Program

Any new or modified source of TAPs will require an evaluation to determine the applicability of WAC 173-460. The source of TAPs will not be subject to these requirements unless it is specifically identified as a regulated source, is identified by the SIC number 9711 (National Security), or is identified by any other SIC number subject to these regulations. In addition, a potentially regulated source would then only be regulated if the estimated TAP emissions from the source were to exceed the corresponding ASILs. Activities for which an applicability determination would be required may include waste retrieval activities or waste pretreatment activities that result in a new or increased TAP emission source.

A4.0 STATE HAZARDOUS WASTE MANAGEMENT REGULATIONS

A4.1 WASHINGTON STATE DANGEROUS WASTE REGULATIONS

On July 26, 1987, Section 70.105.050 of the *State of Washington Hazardous Waste Management Act of 1987* was amended, providing Ecology the authority, as a matter of state law, to regulate the hazardous waste component of radioactive mixed waste (RMW). On November 23, 1987, Ecology received final authorization from the EPA to implement this state amendment. In response to these regulatory changes, the U.S. Department of Energy, Richland Field Office submitted a Part A permit application for the SSTs, identifying these units as RCRA interim status storage and treatment tanks.

Ecology implements and enforces the federal RCRA program through WAC 173-303, known as the "Dangerous Waste Regulations." Many regulations established pursuant to WAC 173-303 are more restrictive than the corresponding RCRA regulations. Activities that are associated with the UST-ID Program and involve dangerous waste management should perform a detailed review of these regulations before initiating any dangerous waste management activity.

The following paragraphs provide a summary of certain portions of WAC 173-303 that are more stringent than the federal RCRA Subtitle C regulations and that are expected to have the greatest impact on the UST-ID Program. Because the Hanford Site operates under one identification number and is regulated as a large quantity generator, regulations applicable to conditionally exempt small quantity generators and small quantity generators will not be discussed in this section.

A4.2 IDENTIFICATION OF DANGEROUS WASTE

In establishing the "Dangerous Waste Regulations" at WAC 173-303, Ecology uses the term "dangerous waste," rather than hazardous waste, to define those wastes that pose a threat to human health and the environment. In addition to determining whether a waste is listed or exhibits a characteristic, a dangerous waste generator must also evaluate the waste against the state criteria. These state criteria are toxicity, persistence, and carcinogenicity.

The definition of a dangerous waste includes two options for classifying a given waste. A definition of dangerous waste is included at WAC 173-303-040 as follows:

> "Dangerous waste means those solid wastes designated in WAC 173-303-070 through 173-303-103 as dangerous or extremely hazardous waste. As used in this chapter, the words "dangerous waste" will refer to the full universe of wastes regulated by this chapter (including dangerous and extremely hazardous waste), while the abbreviation "DW" will refer to that port of the regulated universe which is dangerous only, and not extremely hazardous (EHW)."

A dangerous waste may be designated as extremely hazardous if it meets any one of the following criteria as identified below.

- It is listed as F001 or F002 and contains greater than one percent of the listed halogenated hydrocarbons (WAC 173-303-9904).
- It is listed as an acutely dangerous chemical product (WAC 173-303-9903).
- It exceeds specified limits for toxicity characteristic contaminants (WAC 173-303-090).
- It exceeds specified limits for toxic, persistent, or carcinogenic constituents (WAC 173-303-084 or WAC 173-303-101 through -103).

A4.2.1 Toxic Dangerous Wastes

The WAC 173-303-084(5) establishes the procedures for determining whether a waste mixture is regulated because of the presence of toxic constituents in the waste. These regulations require the generator to perform this designation for those constituents and constituent concentrations that are known to be contained in the waste. The generator is first required to determine the category of toxicity that those known constituent fall within. This information can be obtained from the National Institute for Occupational Safety and Health's *Registry of Chemical Substances* (NIOSH 1991). A toxic category table is provided at WAC 173-303-084(5) to assist the generator in assigning the appropriate toxicity category. These categories, in descending order of toxicity, are X, A, B, C, and D. Once the known constituents have been placed in the appropriate toxicity category, percent concentrations of each constituent is calculated and summed to obtain an equivalent concentration (EC) for the waste mixture. The EC along with the appropriate weight of the mixture can then be plotted on a graph provided at WAC 173-303-9906 to obtain the appropriate dangerous waste designation.

A4.2.2 Persistent Dangerous Waste

The WAC 173-303-084(6) establishes the procedures for determining whether a waste mixture is regulated because of the presence of persistent constituents. A waste may be regulated under this section of WAC 173-303 if the waste mixture has sufficient concentrations of halogenated hydrocarbons (HH) or polycyclic aromatic hydrocarbons (PAH). Only those PAHs with more than three rings but less than seven rings are of concern for the purposes of the PAH designation. In both cases, the generator is required to calculate the percent concentration of the HHs or PAHs in the waste mixture and sum the concentrations to provide a total HH concentration or PAH concentration. This information can then be plotted on a graph provided at WAC 173-303-9907 to obtain the appropriate dangerous waste designation.

A4.2.3 Carcinogenic Dangerous Waste

The WAC 173-303-084(7) establishes the procedures for determining whether a waste mixture is regulated because of the presence of carcinogenic constituents. To make this determination, the generator must determine if the known constituents are identified as an International Agency for Research on Cancer human or animal, sufficient or limited carcinogen. If the total concentration of carcinogens in the waste exceeds 1.0 percent, the waste is designated as dangerous waste.

A4.3 STATE OF WASHINGTON REQUIREMENTS FOR "TREATMENT-BY-GENERATOR"

The federal RCRA regulations of 40 CFR Part 265.1 specifically exclude certain types of waste management activities from the hazardous waste permitting process. However, the dangerous waste regulations established at WAC 173-303 establish requirements that are more stringent than the federal RCRA regulations. These state-only regulations may need to be addressed depending upon the types of activity involved and may be expected to impact waste management options associated with treatability studies or studies being performed under a research, development, and demonstration permit.

A4.3.1 Dangerous Waste Treatment in Accumulation Tanks or Containers

In establishing the requirements applicable to generators of hazardous waste, the EPA allowed generators to perform hazardous waste treatment in a tank or container during the 90-day accumulation period without obtaining a hazardous waste treatment permit. A 1986 *Federal Register* (FR) (51 FR 56, p. 10146) provides a discussion regarding this type of treatment activity as follows:

> "Of course, no permitting would be required if a generator chooses to treat their hazardous waste in the generator's accumulation tanks or containers in conformance with the requirements of 40 CFR Part 262.34 and Subparts J or I of Part 265. Nothing in 40 CFR Part 262.34 precludes a generator from treating waste when it is in an accumulation tank or container covered by that provision. Since EPA allows for limited onsite storage without the need for a permit or interim status, the EPA believes that treatment in accumulation tanks or containers is permissible under the existing rules."

Although the EPA allows treatment of hazardous waste in accumulation tanks or containers, Ecology requires a generator to file a treatment-by-generator (TBG) request before treatment in this manner will be allowed. Ecology will approve a TBG request on a case-by-case basis and will base their decision upon the following:

- The inherent risk of the treatment process--low risk treatment processes including sedimentation, carbon adsorption, precipitation, phase separation, elementary neutralization, solidification, evaporation, etc., will be preferentially allowed

- The toxicity of the waste being treated--treatment of lower toxicity wastes will be preferentially allowed
- The risk to human health and the environment of a release of wastes and the probability of such release
- The relative benefit to the environment--treatment processes that result in a substantial benefit to the environment will be preferentially allowed.

A4.3.2 Elementary Neutralization of Dangerous Waste

In establishing the requirements applicable to generators of hazardous waste, the EPA allowed the use of elementary neutralization units (ENU) without a hazardous waste treatment permit. An ENU is a device that is used for neutralizing wastes that are hazardous only because they exhibit the corrosivity characteristic or because they are regulated as a listed hazardous waste because of the characteristic of corrosivity.

In the State of Washington, elementary neutralization is complicated because of the state-only designation for toxicity and the regulations established at WAC 173-802(5). With respect to the toxicity designation, common acids, such as nitric acid, may be regulated as a state-only dangerous waste because of the concentration of nitrate ions. Thus, the waste would be regulated because of state toxicity as well as corrosivity. A generator of such waste may petition Ecology to change the designation of that waste. Upon approval of the petition, the generator would be allowed to manage the waste in accordance with the regulations applicable to corrosive wastes (i.e., elementary neutralization would be allowed). The petition process for a dangerous waste designation change is described at WAC 173-303-910(5).

In addition to the restrictions discussed above, Ecology has established additional restrictions applicable to the ENU, itself. According to WAC 173-303-802(5), the owner or operator of an ENU must secure a National Pollutant Discharge Elimination System (NPDES) permit, state discharge permit under WAC 173-216, or comply with an approved pretreatment permit program for discharges to a publicly owned treatment works (POTW) before discharge. However, an ENU that does not result in a wastewater discharge is not required to undergo the permitting process.

A4.4 LAND DISPOSAL RESTRICTIONS

Wastes generated in association with the UST-ID Program, which will be placed in or on the land for disposal, require a determination regarding the applicability of land disposal restrictions (LDR). The LDR requirements have been discussed from a RCRA Subtitle C perspective in Section 4.7 of this document. However, additional state-only requirements have been established for wastes destined for land disposal.

Ecology has established state-only LDR requirements at WAC 173-303-140. Unlike the federal LDR requirements, which establish treatment of restricted

waste to specified concentrations or by a specified technology, the state LDR requirements are less prescriptive. The following wastes are restricted from land disposal in the State of Washington:

- Bulk or noncontainerized liquid waste unless the liquids have been removed or absorbed, the waste container is very small such as an ampule, or the container is a lab pack and has been appropriately packaged for disposal
- Ignitable and reactive waste
- Solid acid waste
- Organic/carbonaceous waste unless the generator certifies that recycling, treatment, and incineration facilities are not available within a radium of 1,000 miles from Washington State's border
- Leachable inorganic waste unless the waste has been stabilized so that a representative sample will not exhibit the toxicity characteristic.

In addition to the above restrictions, Ecology restricts the land disposal of any waste that is designated as extremely hazardous. The one exception to this restriction is for RMW that is also extremely hazardous, provided that all reasonable methods of treatment, detoxification, neutralization, or other waste management methodologies designed to mitigate hazards associated with these wastes have been employed. Any waste meeting the criteria of RMW and extremely hazardous waste may only be disposed after the above certification has been met and only at a facility owned by the DOE or a licensee of the U.S. Nuclear Regulatory Commission.

A4.5 IMPACTS TO THE UNDERGROUND STORAGE TANK-INTEGRATED DEMONSTRATION PROGRAM

The regulations of WAC 173-303 will impact UST-ID Program activities that generate, transport, treat, store, or dispose of dangerous waste. As discussed above, these regulations implement the federal RCRA Subtitle C requirements for hazardous waste management activities. Among other things, activities associated with sample collection; treatability studies; research, development, and demonstration studies; and development of waste pretreatment options will be impacted by these regulations. Because WAC 173-303 establishes regulations that are generally more restrictive than the federal RCRA Subtitle C regulations, careful evaluation of these requirements is warranted for any project associated with the UST-ID Program.

A5.0 STATE WASTEWATER DISCHARGE REGULATIONS

A5.1 CITY OF RICHLAND SEWER DISCHARGE LIMITS

The city of Richland's *City of Richland Ordinance, Number 35-84* (Ordinance) establishes wastewater pretreatment regulations for facilities discharging to the city's wastewater collection and treatment system, herein after referred to as POTW. Among other things, the objectives of this ordinance are to do the following:

- Prevent the introduction of pollutants into the city of Richland's POTW, which will interfere with the normal operation of the system or contaminate the resulting municipal sludge
- Prevent the introduction of pollutants into the city of Richland's POTW, which do not receive adequate treatment in the POTW and will cause pass through without such treatment
- Improve the opportunity to recycle and reclaim wastewater and sludge for the city's system.

A5.1.1 Applicability

The provisions contained in the Ordinance are only applicable to facilities that are capable of discharging wastewater to the city of Richland's POTW. Plans are in place to discharge certain wastewater streams from the 300 Area to the city of Richland's POTW by the year 1994. Any source discharging to this system may be required to meet the discharge limits specified at 40 CFR 403 as well as any discharge limits specified by the city of Richland.

A5.1.2 Discharge Limitations

Part 3 of the Ordinance establishes general discharge prohibitions for facilities discharging wastewater to the city of Richland's wastewater treatment system. These general discharge prohibitions include, among others, the following:

- Any liquids, solids, or gases that may cause fire or explosion or be injurious to the operation of the POTW including gasoline, toluene, xylene, ethers, perchlorates, and hydrides
- Any wastewaters having a pH of less than 5.0 or greater than 10.0
- Any substance that will cause the POTW to violate its NPDES and/or other disposal system permits
- Any wastewater having a temperature that will inhibit biological activity in the POTW treatment plant resulting in interference, but, in no case, wastewater with a temperature at the introduction into

the POTW which exceeds 40 °C (104 °F) (unless the POTW treatment plant is designed to accommodate such temperature).

Part 3 of the Ordinance also specifies limitations, expressed in milligrams per liter (mg/L), which must be met at the influent to the city of Richland's POTW as follows:

Material	Concentration
Cadmium	.0019 mg/L
Chromium	1.41 mg/L
Copper	0.16 mg/L
Cyanide	0.07 mg/L
Lead	0.11 mg/L
Mercury	0.13 mg/L
Nickel	0.31 mg/L
Silver	6.02 mg/L
Zinc	0.40 mg/L
Chloroform	5.81 mg/L
Ethylbenzene	26.25 mg/L
Methylene chloride	5.30 mg/L
Tetrachloroethylene	28.44 mg/L

A5.1.3 Discharge Permits

Part 5 of the Ordinance specifies that it is unlawful to discharge sewage, industrial wastes, or other wastes without a permit issued by the city of Richland to any sewer within the jurisdiction of the City, and/or the POTW. Any existing significant industrial discharger and those significant industrial dischargers proposing to connect to or to discharge sewage, industrial wastes, and other wastes to the POTW must obtain a Wastewater Discharge Permit before connecting to or discharging to the POTW. New dischargers are required to apply for the appropriate permit at least 90 days before connecting to the POTW. All information identified in Part 5 of the Ordinance must be submitted to the city of Richland before a permit will be issued.

A5.1.4 Impacts to the Underground Storage Tank-Integrated Demonstration Program

As discussed above, this Ordinance is expected to have minimal impacts on the UST-ID Program. This Ordinance will only impact projects or demonstrations generating industrial wastewaters or proposing to discharge such wastewaters to the city of Richland's POTW. In addition, any new

facility that is being constructed specifically to support the UST-ID Program could be impacted if discharges of sanitary sewage will be sent to the city of Richland's POTW.

A5.2 STATE WASTE DISCHARGE PERMIT PROGRAM

The State of Washington has established regulations at WAC 173-216 that govern the discharge of waste materials from industrial, commercial, and municipal operations into ground and surface waters of the state and into municipal sewer systems. However, these regulations specifically exclude the point source discharge of pollutants into navigable waters of the state, which are regulated via an NPDES permit. At the Hanford Site, the NPDES permitting program is governed by the EPA rather than Ecology.

A5.2.1 Applicability

Ecology defines underground waters as waters of the State of Washington. Therefore, any wastewater discharge to the soil column which may adversely impact the groundwater has been determined to be subject to the permitting requirements of WAC 173-216. An owner or operator of a facility discharging wastewater under the provisions of a WAC 173-216 permit must use best available technology/all known available and reasonable treatment, as defined in the *Clean Water Act of 1977* and *Water Pollution Control*, Chapter 90.48 of the Revised Code of Washington, respectively.

Existing wastewater streams at the Hanford Site will be permitted under WAC 173-216, in accordance with a schedule established in a consent order between the U.S. Department of Energy, Richland Field Office and Ecology. This consent order, Consent Order Number DE 91NM-177 (Ecology and DOE 1992), establishes a schedule for obtaining WAC 173-216 permits for 33 key wastewater streams that currently discharge to the soil column. These 33 wastewater streams have been categorized as Phase I or Phase II streams, based on the urgency of reducing or eliminating discharges to the soil column.

Any project associated with the UST-ID Program that will generate a wastewater discharge intended for disposal to the soil column will require an evaluation to determine the applicability of WAC 173-216. This assessment and the appropriate WAC 173-216 permit must be obtained before discharging wastewater to the soil column. If the stream in question will be tied into an existing wastewater discharge stream, the above referenced Consent Order will require revision to address the stream in question. Any revision to this Consent Order will require prior approval from Ecology.

A5.2.2 Permit Requirements

In order to obtain a permit, the owner or operator must first submit to Ecology, for approval, all engineering reports, plans, and specifications for the project in question. These plans and reports are required to be submitted to Ecology per WAC 173-240, "Submission of Plans and Reports for Construction of Wastewater Facilities." Based upon a review of the information required per WAC 173-240, Ecology will make a determination regarding permit issuance.

In addition to securing the appropriate permit for the wastewater discharge in question, the Consent Order will require revision to address the discharge and the associated monitoring requirements.

A5.2.3 Impacts to the Underground Storage Tank-Integrated Demonstration Program

Impacts to the UST-ID Program from the regulations of WAC 173-216 are expected to be minimal because it is unlikely that new technology development activities will choose discharge to the soil column as the preferred method of wastewater disposal. However, if a given project generates a wastewater stream and determines that it is appropriate to discharge to the soil column or to tie into an existing stream, these regulations will require an evaluation and the appropriate actions will be required. At a minimum, any wastewater stream that discharges to the soil column will require a permit issued pursuant to WAC 173-216 and a revision to the Consent Order to address the stream, as appropriate.

A5.3 SUBMISSION OF PLANS AND REPORTS FOR CONSTRUCTION OF WASTEWATER FACILITIES

This section has been included to provide a discussion of the data submittal requirements necessary to obtain a wastewater discharge permit in accordance with WAC 173-216, "State Waste Discharge Permit Program." As discussed above, WAC 173-216 requires a wastewater discharge permit applicant to submit certain information in accordance with WAC 173-240. The regulations of WAC 173-240 require any person applying for a wastewater discharge permit to submit engineering plans, reports, and specifications to Ecology for review and concurrence before a wastewater discharge permit will be issued.

A5.3.1 Applicability

The regulations at WAC 173-240 establish the informational requirements for both domestic and industrial wastewater facilities. However, in the case of a permit issued under WAC 173-216, the requirements for industrial wastewater facilities at WAC 173-240-110 through -150 are applicable.

Before constructing or modifying industrial wastewater facilities, engineering reports, plans, and specifications are required to be submitted to and approved by Ecology. The regulations of WAC 173-240 require all engineering reports, plans, and specifications to be submitted by the owner or operator at least 30 days before the time permit approval is required. Unless Ecology waives the three step submittal process, the following sequence of submittal is required by WAC 173-240-110(3):

- Submittal and approval of an engineering report
- Submittal and approval of plans and specifications
- Submittal of an operation and maintenance manual.

Each of the above documents must include specific information sufficient to allow Ecology to make a permitting decision on the proposed wastewater

discharge. The engineering report, plans and specifications, and operation and maintenance manual must include the required information of WAC 173-240-130, -140, and -150, respectively.

A5.3.2 Impacts to the Underground Storage Tank-Integrated Demonstration Program

The requirements of WAC 173-240 are applicable only as a condition to obtaining a permit in accordance with WAC 173-216 for discharges of wastewater to the soil column. It is unlikely that demonstrations associated with the UST-ID Program will result in discharges to the soil column. However, in the event that this is the case, the appropriate wastewater discharge permit will be required. Significant delays are possible if this determination is not made early in the technology evaluation phases. A minimum of 30 days is required for Ecology to review the required documentation and additional agreements may be required with Ecology before allowing such discharges.

A6.0 OTHER RELEVANT REQUIREMENTS

A6.1 WYDEN AMENDMENTS

On November 5, 1990, "Public Law 101-510, Section 3137" (Wyden Bill) was passed by Congress to address safety measures for certain watch-list tanks at the Hanford Site. The Wyden Bill, now the Wyden Amendments, requires the Secretary of Energy to identify those SSTs and DSTs at the Hanford Site that may have a potential for releases of high-level waste due to uncontrolled increases in temperature or pressure. After those tanks have been identified, the Secretary is required to determine whether continuous monitoring is being carried out to detect a release or increase in excessive temperature or pressure at each identified tank. If it is determined that such monitoring is not being carried out, the Secretary is required to install the required monitoring, but only if the installation of the monitoring equipment does not increase the danger of a release.

The Wyden Amendments prohibit the addition of high-level radioactive wastes to watch-list tanks except for small amounts to be removed and returned to a tank for analysis, unless the Secretary determines that no safer alternative exists or that the tank does not pose a serious potential for a release of high-level radioactive waste.

A6.1.1 Applicability

As discussed above, the Secretary of Energy is required to identify those tanks at the Hanford Site that have the potential for releases of high level waste as a result of increases in temperature or pressure. Tanks that have been identified as meeting the criteria of the Wyden Amendments have been placed on a "Watch List." These tanks have been classified on the basis of hydrogen generation, the presence of ferrocyanide salts, organic-nitrate reaction potential, and heat generation.

Specific waste storage tanks have been identified as watch-list tanks because of hydrogen generation from the waste. Hydrogen is generated by a process of radiolysis, the decomposition of water cause by radioactivity within the tanks. The following tanks have been placed on the watch list because of hydrogen generation:

- Five DSTs
  - 241-AN-103, -104, -105
  - 241-SY-101, -103

- Eighteen SSTs
  - 241-A-101
  - 241-AX-101, -103
  - 241-S-102, -111, -112
  - 241-SX-101, -102, -103, -104, -105, -106, -109
  - 241-T-110
  - 241-U-103, -105, -108, -109.

Studies have indicated that ferrocyanide salts in the presence of nitrate and/or nitrite constituents can be made to react and explode under certain conditions, including elevated temperatures. The following 23 SSTs have been placed on the watch list because they contain ferrocyanide salts:

- 241-BX-102, -106, -110, -111
- 241-BY-101, -103, -104, -105, -106, -107, -108, -110, -111, -112
- 241-C-108, -109, -111, -112
- 241-T-101
- 241-TX-118
- 241-TY-101, -103, -104.

Certain tanks have been placed on the watch list because they contain high organic material and are potentially flammable. Many organic chemicals, if present in concentration of greater than 10 percent, have the potential to react with nitrate/nitrites at temperatures above 180 °C (356 °F). The following eight SSTs have been placed on the watch list for high organic material content:

- 241-C-103
- 241-B-103
- 241-TX-105, -118
- 241-S-102
- 241-SX-106
- 241-U-106, -107.

Single-shell tank 241-C-106 has been identified as a watch-list tank because of temperature concerns. Water is periodically added to this tank to keep the sludge wet and to promote heat transfer to the vapor space. The waste within this tank currently generates heat at a rate of 156,000 Btu/hour and, thus, water addition cannot be eliminated at this time.

A6.1.2 Constraints Associated With Watch-List Tanks

According to the Wyden Amendments, Secretarial approval is required before adding waste to any watch list tank. In addition, Secretarial approval has been obtained for actions involving the addition of water to watch list tanks resulting from routine maintenance and operations. Therefore, any action associated with a watch list tank should be carefully reviewed to determine whether or not Secretarial approval is required for the action in question.

Activities conducted within a watch list tank, such as characterization, mitigation, and remediation activities, will also require additional safety and environmental documentation. The goal of the safety assessment (SA) is to systematically identify the hazards of a situation; describe and analyze measures taken to eliminate, control, or mitigate identified hazards; and to eliminate, control, or mitigate those hazards. The SA also analyzes potential accidents associated with a proposed action and the resulting risks if an accident were to occur. The SA is intended to support an activity until a safety analysis report is updated to envelope a given action.

Activities conducted within a watch list tank are also required to be evaluated through development of an environmental assessment (EA). An EA provides the DOE with sufficient information to determine whether a proposed action requires an EIS or a finding of no significant impact, as discussed in Section 2 of this document. Finally, activities conducted within a watch list tank will be required to undergo an engineering evaluation of alternatives to ensure that the proposed action is the most appropriate course of action to be taken.

A6.1.3 Impacts to the Underground Storage Tank-Integrated Demonstration Program

Impacts to the UST-ID Program from the Wyden Amendments will be contingent upon whether a proposed action is being undertaken in a watch list tank. If demonstration activities are not being undertaken in a watch list tank, the Wyden Amendments will have no impact at all. However, if demonstration activities will be undertaken in a watch list tank, significant evaluations will be required before the action may be initiated. As discussed above, a review will be required to determine if Secretarial Action is required, and an EA will require development and approval from DOE before the proposed action may proceed.

A7.0 REFERENCES

A7.1 CODE OF FEDERAL REGULATIONS

40 CFR 61, "National Emission Standards for Hazardous Air Pollutants," Subpart H, U.S. Environmental Protection Agency, Washington, D.C.

40 CFR 262, "Standards Applicable to Generators of Hazardous Waste," U.S. Environmental Protection Agency, Washington, D.C.

40 CFR 264, "Standards for Owners and Operators of Hazardous Waste Treatment, Storage, and Disposal Facilities," U.S. Environmental Protection Agency, Washington, D.C.

40 CFR 265, "Interim Status Standards for Owners and Operators of Hazardous Waste Treatment, Storage, and Disposal Facilities," U.S. Environmental Protection Agency, Washington, D.C.

40 CFR 403, "General Pretreatment Regulations for Existing and New Sources of Pollution," U.S. Environmental Protection Agency, Washington, D.C.

A7.2 DOCUMENTS

Ecology, EPA, and DOE, 1990, *Hanford Federal Facility Agreement and Consent Order*, 2 Vols., as amended, Washington State Department of Ecology, U.S. Environmental Protection Agency, and U.S. Department of Energy.

Ecology and DOE, 1992, "In the matter of the compliance by United States Department of Energy with Chapter 70.105 and 90.48 RCW and the Rules and Regulations of the Department of Ecology," Consent Order DE 91NM-177 (for the permitting of liquid effluent discharges under *Washington Administrative Code* 173-216), Dated February 3, 1992, Washington State Department of Ecology, Olympia, Washington.

Winters, W. I., L. Jensen, L. M. Sasaki, R. L. Weiss, J. F. Keller, A. J. Schmidt, M. J. Woodruff, 1990, *Waste Characterization Plan for the Hanford Site Single-Shell Tanks*, WHC-EP-0210, Rev. 2, Westinghouse Hanford Company, Richland, Washington.

NIOSH, 1991, *Registry of Toxic Effects of Chemical Substances, National Institute for Occupational Safety and Health*, U.S. Department of Health and Human Services, Washington, D.C.

A7.3 FEDERAL REGISTER

51 *Federal Register* 56, "Hazardous Waste Management System: General; Identification and Listing of Hazardous Waste; Standards for Generators of Hazardous Waste; Standards for Transporters of Hazardous Waste; EPA Administered Permit Programs; Authorization of State Hazardous Waste Programs; Final Rule," U.S. Environmental Protection Agency, Washington, D.C.

A7.4 PUBLIC LAWS

Clean Water Act of 1977, 33 USC 1251 et seq.

City of Richland Ordinance, No. 35-84.

Comprehensive Environmental Response, Compensation, and Liability Act of 1980, 42 USC 9601 et seq.

National Defense Authorization Act for Fiscal Year 1991, Public Law 101-510, Section 3137, "Safety Measures for Waste Tanks at Hanford Nuclear Reservation," November 5, 1990.

National Environmental Policy Act of 1969, 42 USC 4321 et seq.

Resource Conservation and Recovery Act of 1976, 42 USC 6901 et seq.

State Environmental Policy Act of 1971, Revised Code of Washington 43.21C, Olympia, Washington.

State of Washington Hazardous Waste Management Act of 1987, Revised Code of Washington, Chapter 70.105.050, as amended, Olympia, Washington.

Water Pollution Control, Revised Code of Washington, Chapter 90.48, as amended, Olympia, Washington.

A7.5 WASHINGTON (STATE) ADMINISTRATIVE CODE

WAC 173-216, "State waste discharge permit program," Washington State Department of Ecology, Olympia, Washington.

WAC 173-240, "Submission of Plans and Reports for Construction of Wastewater Facilities," Washington State Department of Ecology, Olympia, Washington.

WAC 173-303, "Dangerous Waste Regulations," Washington State Department of Ecology, Olympia, Washington.

WAC 173-400, "General Regulations of Air Pollution," Washington State Department of Ecology, Olympia, Washington.

WAC 173-460, "Controls for New Sources of Air Pollutants," Washington State Department of Ecology, Olympia, Washington.

WAC 173-802, "SEPA procedures," Washington State Department of Ecology, Olympia, Washington.

WAC 191-11, "SEPA RULES," Washington State Council on Environmental Policy, Olympia, Washington.

WAC 246-247, "Radiation Protection - Air Emissions," Washington State Department of Health, Olympia, Washington.

This page intentionally left blank.

DISTRIBUTION

Number of copies		
ONSITE		
1	U.S. Department of Energy-Richland Field Office	
	Public Reading Room	A1-65
1	Pacific Northwest Laboratory	
	PNL Technical Files	K1-11
39	Westinghouse Hanford Company	
	E. H. Smith (30)	B2-19
	Central Files	L8-04
	Document Processing and Distribution (2)	L8-15
	EDMC (2)	H4-22
	Environmental Resource Center	H4-55
	Information Release Administration (3)	A2-24

This page intentionally left blank.

DISTRIBUTION

Number of copies		
ONSITE		
1	U.S. Department of Energy-Richland Field Office	
	Public Reading Room	A1-65
1	Pacific Northwest Laboratory	
	PNL Technical Files	K1-11
39	Westinghouse Hanford Company	
	E. H. Smith (30)	B2-19
	Central Files	L8-04
	Document Processing and Distribution (2)	L8-15
	EDMC (2)	H4-22
	Environmental Resource Center	H4-55
	Information Release Administration (3)	A2-24