CH2M HILL DOCUMENT RELEASE FORM

(1) Document Number:	RPP-RPT-23205	(2) Revision Number: 0 A	(3) Effective Date: N/A
(4) Document Type:	☐ Digital Image ☒ Hard copy ☐ PDF ☐ Video	(a) Number of pages (including the DRF) or number of digital images	60
(5) Release Type	☐ New ☐ Cancel	☒ Page Change	☐ Complete Revision
(6) Document Title:	ULTRASONIC INSPECTION RESULTS FOR DOUBLE-SHELL TANK 241-AP-106 - FY 2005		
(7) Change/Release Description:	Change the term "course" and "courses" to "plate" and "plates" in the body of the document to describe the horizontal pieces of the tank.		
(8) Change Justification:	This is at the request of the ORP Project Manager to be consistent with previous years reports on DST ultrasonic inspection results. This is an editorial change.		

(9) Associated Structure, System, and Component (SSC) and Building Number:		
	(a) Structure Location: 241-AP-106	(c) Building Number: N/A
	(b) System Designator: WST	(d) Equipment ID Number (EIN): N/A

(10) Impacted Documents:	(a) Document Type	(b) Document Number	(c) Document Revision
	NONE	N/A	N/A

(11) Approvals:

(a) Author (Print/Sign): CE Jensen	Date: 23 JUNE 05
(b) Responsible Manager (Print/Sign): BH Thacker	Date: 6/28/05
(c) Reviewer (Optional, Print/Sign): MA Haq	Date: 6/28/05
(d) Reviewer (Optional, Print/Sign):	Date:

(12) Distribution:

(a) Name	(b) MSIN	(a) Name	(b) MSIN	Release Stamp
JL Castleberry	R3-26	CE Jensen	R3-26	
GP Duncan	R3-26			
TL Faust	S5-03			
PC Miller	R1-51			
BH Thacker	S5-10			
MA Haq	S5-10			
RR True	R3-26			

DATE: JUL 0 8 2005 HANFORD RELEASE STA: 4 ID: 2

(13) Clearance	(a) Cleared for Public Release	(b) Restricted Information?	(c) Restriction Type:
	☒ Yes ☐ No	☐ Yes ☒ No	N/A

(14) Clearance Review (Print/Sign): L. Fox — Date: 7-8-05

A-6003-881 (05/05)

ULTRASONIC INSPECTION RESULTS FOR DOUBLE-SHELL TANK 241-AP-106 - FY 2005

CHRIS E. JENSEN
CH2M HILL HANFORD CORP.
Richland, WA 99352
U.S. Department of Energy Contract DE-AC27-99RL14047

EDT/ECN: N/A
UC:
Cost Center: 7G220
Charge Code: 500450
B&R Code:
Total Pages: 60

Key Words: DST, ULTRASONIC, INSPECTION, CORROSION, INTEGRITY

Abstract: This report documents the ultrasonic examination of 241-AP-106. There was no reportable wall thinning detected in any of the plate areas examined. Small degrees of average wall thinning were observed in two courses, the 0.5625 inch thick Course and the 0.875 inch thick Course. The greatest single wall thinning is 9.0% in course 1. There were no crack like indications nor reportable pitting indications detected in any of the weld heat affected zones or wall courses.

TRADEMARK DISCLAIMER. Reference herein to any specific commercial product, process, or service by trade name, trademark, manufacturer, or otherwise, does not necessarily constitute or imply its endorsement, recommendation, or favoring by the United States Government or any agency thereof or its contractors or subcontractors.

Printed in the United States of America. To obtain copies of this document, contact: Document Control Services, P.O. Box 950, Mailstop H6-08, Richland WA 99352, Phone (509) 372-2420; Fax (509) 376-4989.

DATE: HANFORD RELEASE ID
STA: 4
2
JUL 08 2005

Janis Braden 7/8/05
Release Approval Date
Janis Braden

Release Stamp

Approved For Public Release

Tank Farm Contractor (TFC) **RECORD OF REVISION**	(1) Document Number RPP-RPT-23205	Page 1

(2) Title
ULTRASONIC INSPECTION RESULTS FOR DOUBLE-SHELL TANK 241-AP-106 - FY 2005

Change Control Record

(3) Revision	(4) Description of Change - Replace, Add, and Delete Pages	Authorized for Release	
		(5) Resp. Engr. (print/sign/date)	(6) Resp. Mgr. (print/sign/date)
0	INITIAL RELEASE	CE JENSEN	BH THACKER
0A RS	CHANGE THE TERM "COURSE" AND "COURSES" TO "PLATE" AND "PLATES" IN THE REPORT SECTION.	CE JENSEN 6 July 05	BH THACKER 7/8/05

0066930

RPP-RPT-23205
Revision 0A

ULTRASONIC INSPECTION RESULTS FOR DOUBLE-SHELL TANK 241-AP-106 – FY 2005

RECEIVED
OCT 04 2005
EDMC

C.E. Jensen

CH2M HILL Hanford Group, Inc.

Date Published
July 2005

CH2MHILL
Hanford Group, Inc.

Post Office Box 1500
Richland, Washington

Prepared for the U.S. Department of Energy
Office of River Protection

Contract No. DE-AC27-99RL14047

Approved for public release; distribution is unlimited

RPP-RPT-23205, Rev. 0A

Ultrasonic Inspection Results for Double-Shell Tank 241-AP-106 – FY 2005

July 2005

Prepared by:

A. M. Ermi,
COGEMA Engineering Corporation

Prepared for:

C. E. Jensen
CH2M HILL Hanford Group Inc.

This page intentionally left blank.

CONTENTS

1.0 INTRODUCTION 1-1

2.0 OBJECTIVE AND SCOPE 2-1

3.0 INSPECTION EQUIPMENT DESCRIPTION 3-1

4.0 UT INSPECTION DESCRIPTION 4-1

5.0 INDICATION REPORTING CRITERIA 5-1

6.0 PERFORMANCE DEMONSTRATION TESTS 6-1

7.0 TANK 241-AP-106 HISTORY 7-1

8.0 GENERAL REQUIREMENTS AND INSPECTION SCOPE 8-1

9.0 EQUIPMENT SETUP AT AP TANK FARM 9-1

10.0 INSPECTION RESULTS 10-1

11.0 EVALUATION OF INSPECTION RESULTS 11-1
- 11.1 TANK 241-AP-106 UT DATA EVALUATION 11-1
- 11.2 DST ULTRASONIC INSPECTION DATA RESULTS COMPARISON 11-4

12.0 FINDINGS, CONCLUSIONS, AND RECOMMENDATIONS 12-1

13.0 REFERENCES 13-1

ATTACHMENTS

1. AUTOMATED ULTRASONIC EXAMINATION FOR CORROSION AND CRACKING (Procedure COGEMA-SVUT-INS-007.3, Rev. 2) ..... Att. 1-1

2. COGEMA "AUTOMATED ULTRASONIC THICKNESS DATA REPORT SHEETS" ..... Att. 2-1

3. ULTRASONIC EXAMINATION OF DOUBLE-SHELL TANK 241-AP-106 EXAMINATION COMPLETED NOVEMBER 2004 (PNNL THIRD PARTY REVIEW) ..... Att. 3-1

FIGURES

Figure 1-1. Typical Double-Shell Tank Configuration 1-1

Figure 3-1. P-scan Crawler System on Tank Mock-up 3-1

Figure 4-1. Schematic of UT Setup for Vertical Wall Inspection 4-1

Figure 4-2. Schematic of UT Setup for First Pass of Weld Inspections 4-2

Figure 4-3. Schematic of UT Setup for Second Pass of Weld Inspections 4-3

Figure 7-1. Waste Level History of Double-Shell Tank 241-AP-106 7-2

Figure 9-1. Field Set-Up at Riser for Double-Shell Tank on AP-Farm 9-1

Figure 10-1. Schematic of UT Scan Paths on East Side of Tank 241-AP-106 Wall (via Riser 030) 10-2

Figure 11-1. Scan Data Average Wall Thickness Compared to Nominal Plate Thickness 11-2

TABLES

Table 10-1. Summary of Primary Tank Wall Scan 1 (via Riser 030) 10-3

Table 10-2. Summary of Primary Tank Wall Scan 2 (via Riser 030) 10-4

Table 10-3. Summary of Primary Tank Weld Scans (via Riser 030) 10-4

Table 10-4. Summary of Plate #5 / Knuckle Horizontal Weld Scans (via Riser 030) 10-5

Table 10-5. Primary Tank Vertical Wall Scan 1 – Plate #1 (via Riser 030) 10-5

Table 10-6. Primary Tank Vertical Wall Scan 1 - Plate #2 (via Riser 030) 10-6

Table 10-7. Primary Tank Vertical Wall Scan 1 - Plate #3 (via Riser 030) 10-6

Table 10-8. Primary Tank Vertical Wall Scan 1 – Plate #4 (via Riser 030) 10-7

Table 10-9. Primary Tank Vertical Wall Scan 1 – Plate #5 (via Riser 030) 10-7

Table 10-10. Primary Tank Vertical Wall Scan 2 – Plate #1 (via Riser 030) 10-8

Table 10-11. Primary Tank Vertical Wall Scan 2 – Plate #2 (via Riser 030) 10-8

Table 10-12. Primary Tank Vertical Wall Scan 2 - Plate #3 (via Riser 030) 10-9

Table 10-13. Primary Tank Vertical Wall Scan 2 - Plate #4 (via Riser 030) 10-9

Table 10-14. Primary Tank Vertical Wall Scan 2 - Plate #5 (via Riser 030) 10-10

Table 10-15. Primary Tank Vertical Wall Weld Scan - Plate #2 (via Riser 030) 10-10

Table 10-16. Primary Tank Vertical Wall Weld Scan - Plate #3 (via Riser 030) 10-11

Table 10-17. Primary Tank Vertical Wall Weld Scan - Plate #4 (via Riser 030) 10-11

Table 10-18. Primary Tank Vertical Wall Weld Scan - Plate #5 (via Riser 030) 10-12

Table 10-19. Primary Tank Horizontal Weld - Plate #5 to Knuckle Scan, Plate #5 Side (via Riser 030) 10-13

Table 10-20. Primary Tank Horizontal Weld - Plate #5 to Knuckle Scan, Knuckle Side (via Riser 030) 10-14

Table 11-1. Average Tank Wall Thickness Values 11-3

Table 11-2. Double-Shell Tanks Chronological Inspection Results Findings 11-4

Table 11-3. Tank Wall Thinning By Nominal Plate Size 11-7

TERMS

ASME	American Society of Mechanical Engineers
CH2M HILL	CH2M HILL Hanford Group, Inc.
COGEMA Engineering	COGEMA Engineering Corporation
DST	double-shell tank
DSTIP	Double-Shell Tank Integrity Project
FY	fiscal year
HAZ	heat-affected zone
JCS	Job Control System
NDE	Nondestructive Examination
PDT	Performance Demonstration Test
PNNL	Pacific Northwest National Laboratory
RL	U.S. Department of Energy, Richland Operations Office
RMS	Root Mean Square
T-SAFT	Tandem Synthetic Aperture Focusing Technique
TWINS	Tank Waste Information Network System
TWRS	Tank Waste Remediation System
UT	Ultrasonic Testing
WDOE	Washington State Department of Ecology

EXECUTIVE SUMMARY

Background

Through FY 1999, six double-shell tanks were ultrasonically examined to meet the integrity requirements of the *Washington Administrative Code*, Chapter 173-303, "Dangerous Waste Regulations". Subsequent to the examinations, integrity assessment reports were issued for each double-shell tank farm and submitted to the Washington State Department of Ecology in FY 1999. In June 2000, the Washington State Department of Ecology issued Administrative Orders 00NWPKW-1250 and 00NWPKW-1251 providing prescriptive examination requirements for all double-shell tanks by FY 2005. In 2003, the Administrative Orders were incorporated into the Hanford Federal Facility Agreement and Consent Order, Milestones Series M-48. Milestone M-48-13 requires examination by September 30, 2005, of four DSTs not previously examined. This report documents the required ultrasonic examination of double-shell tank 241-AP-106, completed in the first quarter of FY 2005.

Methodology

The primary tank wall examinations consisted of a vertical 30-inch strip consisting of two 15-inch ultrasonic examination scans. The primary wall vertical examinations were looking for wall thinning, cracking, and pitting in the tank wall. The weld heat affected zones examined included 25 linear feet of vertical welds and 21 linear feet of horizontal welds. These examinations were performed using the P-scan nondestructive examination technique.

The ultrasonic examinations were carried out in accordance with ASME Boiler and Pressure Vessel Code, Section V, "Nondestructive Examinations". The personnel and non-destructive examination equipment were qualified to perform the examinations on the double-shell tanks by performance demonstration tests administered by Pacific Northwest National Laboratories.

The required accuracy for the ultrasonic examinations is to be within 0.020 inches for wall thinning, 0.050 inches for pitting, and 0.10 inches for cracking. The performance demonstration tests revealed that the examiners meet this requirement.

Results

There was no reportable wall thinning detected in any of the plate areas examined. The primary wall vertical scans yielded overall average wall thickness values that deviated from the nominal values by -0.001 to +0.023 inches. Small degrees of average wall thinning were observed in two plates, the 0.5625 inch thick Plate #3 (-0.006 inches) and the 0.875 inch thick Plate #5 (-0.012 inches). Of the 12 inch long vertical wall plate scans yielding minimums falling below the nominal values, the greatest deviation was 9.0% below the nominal (Plate #1, Scan 1), where reportable wall thinning is defined as greater than 10% below the nominal.

There were no reportable pitting indications nor any crack-like indications detected in any of the vertical wall plates.

There were no areas of reportable wall thinning, no crack-like indications nor reportable pitting indications detected in any of the weld heat-affected zones. This included the primary tank vertical weld scans and the knuckle-to-shell horizontal weld scan.

Conclusions

Based on the results of this examination (no reportable indications), the material condition of the tank is satisfactory for continued operation.

The tanks inspected to date are summarized in the following table.

Double-Shell Tanks Inspected Through November 2004

Double-Shell Tank	Inspection Year (FY)								
	1997	1998	1999	2000	2001	2002	2003	2004	2005
AN-101						x			
AN-102					x				
AN-105			x			(1)			
AN-106			x						
AN-107		x							
AP-101							x (3)		
AP-103							x (4)		
AP-104								x	
AP-105							x		
AP-106									x
AP-107				x					
AP-108				x		(2)			
AW-101					x				
AW-102						x	(5)		
AW-103	x								
AW-104						x			
AW-105					x				
AW-106						x			
AY-101					x	x	(1)		
AY-102			x						
AZ-101			x						
AZ-102							x (3)		
SY-101								x	
SY-102								x	
SY-103								x	

(1) Limited scope reexamination.

(2) Linear indication evaluated.

(3) Includes primary knuckle Synthetic Aperture Focusing Technique (T-SAFT) examination.

(4) Linear indication detected; A follow-up inspection determined that it is a small area of incomplete fusion.

(5) Primary knuckle T-SAFT examination only.

1.0 INTRODUCTION

In May 1996 the Tank Waste Remediation System (TWRS) Decision Board recommended, and U.S. Department of Energy, Richland Operations Office (RL) agreed, that the condition of the double-shell tanks (DST) should be determined by ultrasonic testing (UT) inspection of a limited area in six of the 28 DSTs (Figure 1-1). The Washington State Department of Ecology (WDOE) agreed with the strategy of limited ultrasonic inspection of DSTs. Data collected during the UT inspections will be used to assess the condition of the tank, judge the effects of past corrosion control practices, and satisfy a regulatory requirement to periodically assess the integrity of waste tanks.

Figure 1-1. Typical Double-Shell Tank Configuration

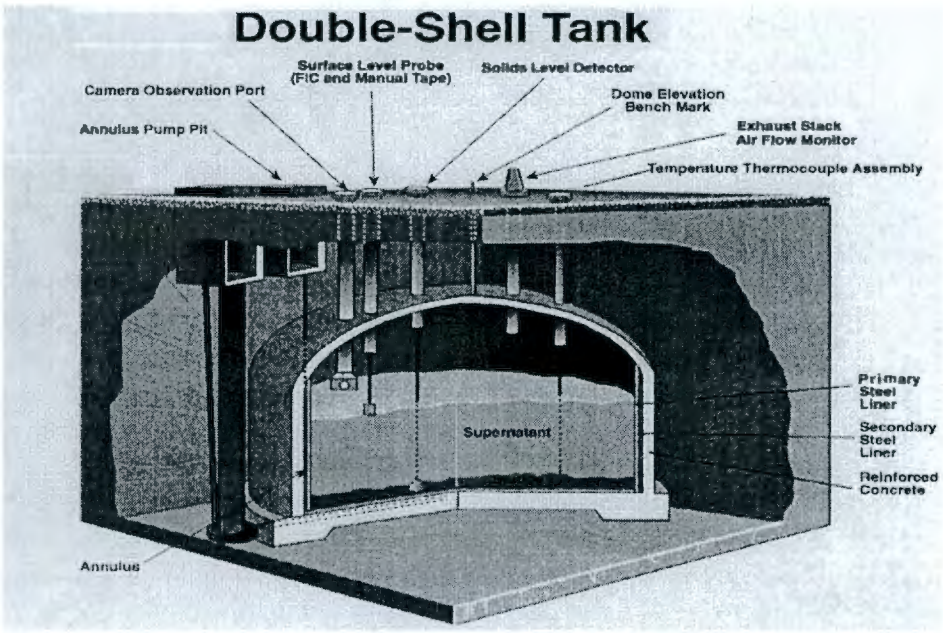

In November 1996, DST 241-AW-103 was the first tank inspected to determine if Hanford DST walls could be inspected without removing the existing surface rust and scale. Equipment similar to that used to perform routine inspections of oil tanks and large pipelines was used. UT sensors were mounted on a remote-controlled crawler that used magnetic wheels to affix itself and move about on the tank walls. The crawler was deployed into the tank annulus and vertically traversed the primary and secondary containment walls to collect data on the wall thickness and the size of any pits or cracks. The successful completion of this inspection met the requirements of RL Milestone T21-97-455 and represented the first UT inspection of a Hanford DST (*Final Report - Ultrasonic Examination of Tank 241-AW-103 Walls*, Leshikar 1997).

In fiscal year (FY) 1998, FY 1999, and FY 2000, similar inspections were performed per Engineering Task Plans HNF-2820 (*Engineering Task Plan for the Ultrasonic Inspection of Hanford Double-Shell Tanks*, Pfluger 1999) and RPP-5583 (*Engineering Task Plan for the Ultrasonic Inspection of Hanford Double-Shell Tanks - FY2000*, Jensen 2000) on 241-AN-107, 241-AN-106, 241-AN-105, 241-AY-102, 241-AZ-101, 241-AP-107, and 241-AP-108. An

attempt was made to examine 241-AY-101 in FY 1999, but corrosion product on the tank wall prevented reliable examination.

In June 2000, WDOE issued an Administrative Order requiring UT examinations of the remaining 20 DSTs through FY 2005 (*Administrative Order No. 00NWPKW-1251, Failure to Comply with Major Milestone M-32 of the Tri-Party Agreement*, Silver 2000). In 2003, the WDOE Administrative Order (Silver 2000) was incorporated into the Hanford Federal Facility Agreement and Consent Order Milestone Series M-48 (HFFACO 2003), requiring examination during each FY through FY 2005 of four DSTs not previously examined. Based on the results of the above listed eight DST inspections and per the Milestone Series M-48 (HFFACO 2003), engineering task plans were prepared for ultrasonic DST inspections scheduled for the subsequent fiscal years.

In FY 2001, UT inspections were performed on four DSTs: 241-AN-102, 241-AW-101, 241-AW-105, and 241-AY-101 (following cleaning of selected areas of the 241-AY-101 wall). These DSTs were examined per Engineering Task Plan RPP-6839 (*Engineering Task Plan for the Ultrasonic Inspection of Hanford Double-Shell Tanks - FY2001*, Jensen 2000a).

In FY 2002, UT inspections were performed on four more DSTs: 241-AN-101, 241-AW-102, 241-AW-104, and 241-AW-106. Also in FY 2002, a more extensive examination of 241-AY-101 was performed, and an examination of 241-AP-108 was limited to characterization of the linear indication found in FY 2000. In addition, a limited scope reexamination of the upper walls of tank 241-AN-105 was performed in FY 2002. These DSTs were examined per RPP-7869 (*Engineering Task Plan for the Ultrasonic Inspection of Hanford Double-Shell Tanks - FY2002*, Jensen 2002), and RPP-8867 (*Engineering Task Plan for the Ultrasonic Inspection of Hanford Double-Shell Tanks 241-AP-108, 241-AY-101, and 241-AZ-102 - FY2002*, Jensen 2002a).

In FY 2003, UT inspections were performed on four more DSTs: 241-AP-101, 241-AP-103, 241-AP-105, and 241-AZ-102. Also, a primary knuckle inspection on 241-AW-102 using the Tandem Synthetic Aperture Focusing Technique (T-SAFT) not completed during FY 2002 was completed in early FY 2003. In addition, a supplementary, limited scope examination of the tank 241-AY-101 secondary tank wall was completed. These DSTs were examined per RPP-11832 (*Engineering Task Plan for the Ultrasonic Inspection of Hanford Double-Shell Tanks - FY2003*, Jensen 2002b).

In FY 2004, UT inspections were performed on four more DSTs: 241-SY-101, 241-SY-102, 241-SY-103, and 241-AP-104. A limited scope examination of tank 241-AN-105 originally planned for FY 2004 was deferred until FY 2005. These DSTs were examined per RPP-17750 (*Engineering Task Plan for the Ultrasonic Inspection of Hanford Double-Shell Tanks - FY2004*, Jensen 2003).

In FY 2005, UT inspections were planned on four more DSTs: 241-AN-103, 241-AN-104, 241-AP-102, and 241-AP-106. Limited scope examinations of tanks 241-AN-101, 241-AN-105, 241-AP-104 and 241-SY-101 were also planned for FY 2005. These DSTs were to be examined per RPP-22571 (*Engineering Task Plan for the Ultrasonic Inspection of Hanford Double-Shell Tanks - FY2005*, Jensen 2005).

DST 241-AP-106 was the first of the four tanks selected for standard inspection in FY 2005. Inspections of the tank 241-AP-106 walls and welds were completed in the first quarter of FY 2005, and is the subject of this report. The services of COGEMA Engineering Corporation (COGEMA Engineering) were retained to provide UT examinations, procedures and inspectors, and report the inspection results. Examination of 241-AP-106 was performed with UT equipment provided by CH2M HILL Hanford Group, Inc. (CH2M HILL).

This page intentionally left blank.

2.0 OBJECTIVE AND SCOPE

This report describes the inspection system, evaluates the inspection results, and documents findings with conclusions and recommendations. The inspections were conducted in accordance with the criteria and scope set forth in RPP-22571 (Jensen 2005) for the FY 2005 UT inspection of DST 241-AP-106.

This page intentionally left blank.

3.0 INSPECTION EQUIPMENT DESCRIPTION

Crawler / Scanning Bridge Systems – The crawler is a remotely controlled device that delivers the ultrasonic transducers to the tank walls. The crawler used during most P-scan imaging weighs approximately 35 pounds and has dimensions (including its traveling bridge) of approximately 21 inches wide by 18 inches long by 6 inches high. The traveling bridge on the crawler can be outfitted with various ultrasonic transducer configurations (Figure 3-1).

Figure 3-1. P-scan Crawler System on Tank Mock-up

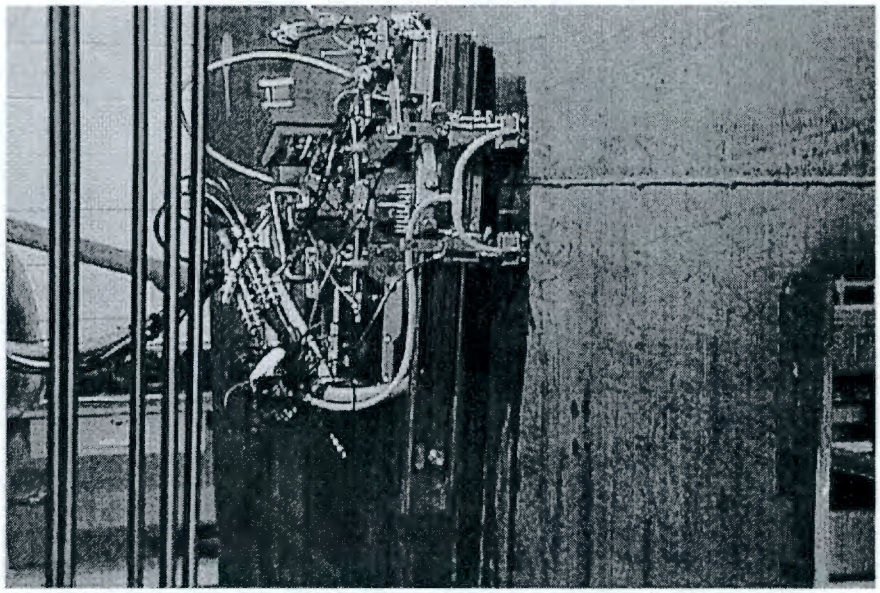

The crawler system was deployed through a 24 inch annulus inspection riser using a customized deployment tool. The P-scan tank wall crawler attaches to the tank wall with two pairs of magnetic wheels. As the crawler moves slowly forward the transducers glide from side-to-side over the tank wall surface. Water couplant is continuously fed to all transducers at a rate needed to maintain an acceptable signal.

Deployment Tool – A deployment tool was specifically designed to insert and retrieve the scanning system into and out of the DST annular space. The scanner sits on a platform that is manually lowered to the appropriate elevation. The platform has cables attached that can be controlled to move the scanner platform into contact with the examination surface. The scanner is then driven onto the surface. The deployment tool is retracted until the scanner needs to be removed from the annular space.

P-scan – P-scan is the name of the computerized pulse-echo ultrasonic inspection system used by the inspection vendor. The P-scan system is manufactured by Force Institute in Denmark. It acquires data from zero and angle beam transducers mounted on the crawler, allows real-time analysis, and records the data in electronic memory for post inspection analysis. Force Institute has designated "P-scan mode" to represent the angle beam (flaw length) view and "T-scan

mode" to represent the zero beam (thickness) view. T-scan mode is used for normal operation and, if crack-like indications are detected, then the P-scan mode is employed.

During normal T-scan and P-scan operations, the waveforms of the reflected sound wave signals for each transducer are displayed in the "A-scan monitoring mode". The displays are continuously monitored (but not saved), and are primarily used to verify that the transducers are functioning properly (e.g., there is proper probe contact, adequate water flowing, and correctly operating transducer cables). When an indication is detected, the area is rescanned using the "A-scan recording mode". The recorded A-scan waveforms are then reviewed off-line, serving as an additional tool in the evaluation of the indication.

Overview Camera – This camera was deployed to observe the area immediately around the inspection area and to aid crawler deployment in the annulus.

Side-view Camera – This camera and light system were installed in a riser adjacent to the inspection riser to provide an overall view of the inspection process.

Riser Enclosure – A modular structure that is placed over the inspection riser. This structure is used to combat adverse weather conditions and supplies an internal hoist for deployment of equipment.

Data Acquisition Control Center – A pull-type trailer was used to house the crawler controls, video monitors, and data collection and evaluation hardware. The trailer was located inside the AP Tank Farm boundary fence.

4.0 UT INSPECTION DESCRIPTION

The following is the description of the data collection methodology:

Tank inspection was performed under Job Control System (JCS) work package number 2E-04-1854. All work steps, guidelines, procedures, personnel responsibilities, and protocol for the inspection (Jensen 2005) were included in the subject work package. The COGEMA Engineering procedure that establish the methods, equipment and requirements for the P-scan imaging system UT measurements and flaw detection is *Automated Ultrasonic Examination For Corrosion And Cracking*, COGEMA-SVUT-INS-007.3 (Attachment 1).

A single remote crawler system was utilized for the various DST 241-AP-106 inspections:

P-scan Crawler for Tank Walls - A remotely controlled, steerable crawler was used to deliver the P-scan UT transducers to the tank wall (Figure 3-1). The crawler was deployed through the 24 inch diameter annulus inspection Riser Number 030 to perform the vertical wall scans and the vertical and horizontal weld scans.

The P-scan crawler inspects the primary tank wall using one dual-element 0° transducer to detect wall thinning and corrosion pitting, and two 45° shear-wave transducers to detect cracking transverse to the scanning direction. This examination setup is illustrated in the Figure 4-1 schematic.

Figure 4-1. Schematic of UT Setup for Vertical Wall Inspection

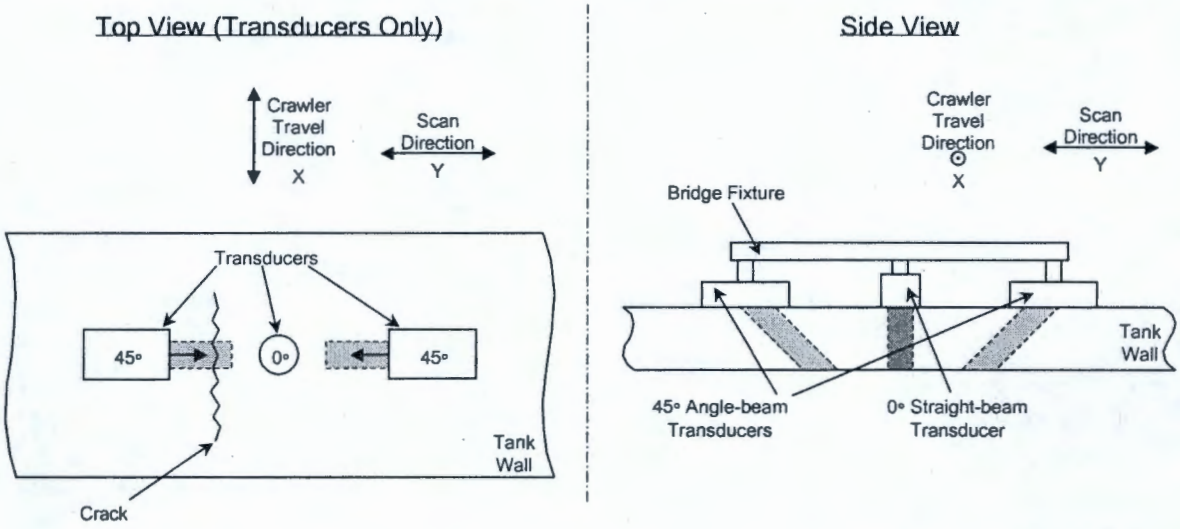

Vertical Wall Inspection Setup – Uses two 45° Transducers and one 0° Transducer (Inspect for Wall Thinning, Pitting and Axial Cracks)

Note that the examination of the welds and heat affected zones (HAZ) actually consist of angle beam examinations in the HAZ. The welds are not directly examined since the physical

configuration does not permit transducer placement on the weld. This physical configuration is the weld crown. The DSTs were not designed or fabricated for in-service inspection, and therefore the weld crowns were not prepared for examination.

To detect cracks parallel to the weld, a 60° shear-wave transducer was directed toward the weld and a dual-element 0° transducer is also included to detect wall thinning and corrosion pitting (Figure 4-2). The examination of the HAZ using 60° angle beams will provide some coverage of the actual weld to the inside surface. For example, in a previous UT examination, a "lack of fusion" in a weld was identified (*Ultrasonic Inspection Results for Double-Shell Tank 241-AP-103*, Jensen 2003a).

Figure 4-2. Schematic of UT Setup for First Pass of Weld Inspections

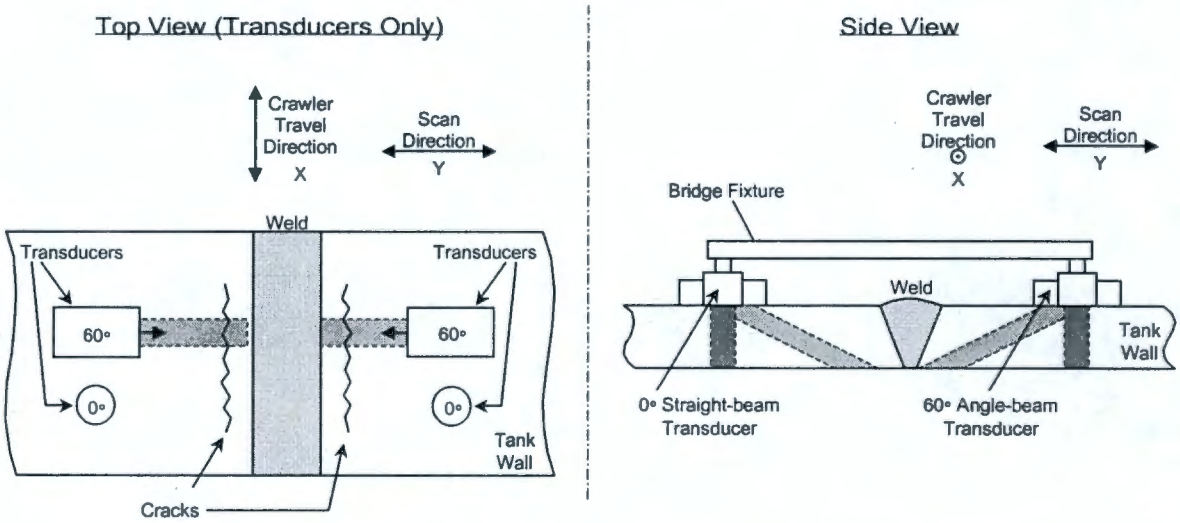

First Pass of Vertical and Horizontal Weld Inspection – Uses two 60° Transducers and two 0° Transducers (Inspect for Wall Thinning, Pitting and HAZ Cracks Parallel to the Weld)

To detect cracks oriented perpendicular to welds, two opposing 45° shear-wave transducers were directed parallel to the weld. Welds were examined from both sides of the weld crown (Figure 4-3).

Figure 4-3. Schematic of UT Setup for Second Pass of Weld Inspections

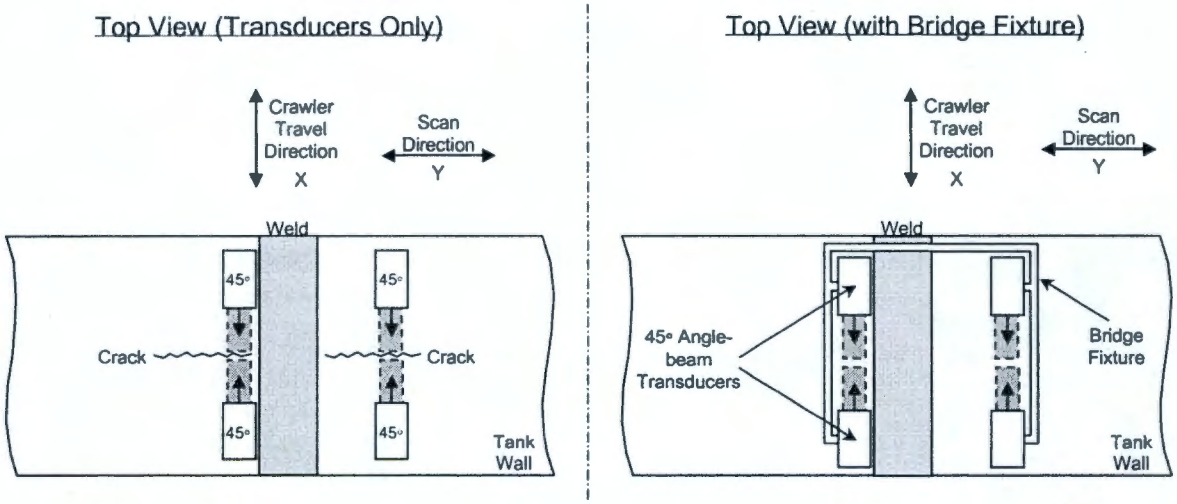

Second Pass of Vertical and Horizontal Weld Inspection – Uses four 45° Transducers (Inspect for Heat-Affected Zone Cracks Perpendicular to the Weld)

Data and images from the P-scan crawler were returned to a nearby control center located inside the tank farm fence. The control center contained the crawler controls, video monitors, and data collection and evaluation software and hardware. The UT inspector continuously monitored the signals for reportable indications.

This page intentionally left blank.

5.0 INDICATION REPORTING CRITERIA

COGEMA Engineering was required to report to the customer the following anomalies:

- Wall thinning that exceeded 10 percent of the nominal wall thickness
- Pit depths that exceeded 25 percent of the nominal wall thickness
- Cracks that exceeded 0.1 inch in depth

The reporting criteria is established to identify indications that should be tracked. This tracking is to be used to determine if there is any active mechanism causing additional thinning, pit growth, or crack growth, based on subsequent examinations on the eight to ten year examination interval. The values are nominally 50% of the "acceptance criteria" established in *Acceptance Criteria for Non-Destructive Examination of Double-Shell Tanks* (Jensen 1995) and recommended in *Guidelines for Development of Structural Integrity Programs for DOE High-Level Waste Storage Tanks* (Bandyopadhyay et al. 1997).

For indications exceeding the "acceptance criteria", actions are initiated to evaluate the operability of the DST (Jensen 2005) through the occurrence reporting process. Indications exceeding the "reporting criteria" are reported to the CH2M HILL Project Engineer to be documented in the inspection report (Jensen 2005).

This page intentionally left blank.

6.0 PERFORMANCE DEMONSTRATION TESTS

Prior to field use, COGEMA Engineering personnel satisfactorily completed a performance demonstration test (PDT). The test was conducted to qualify personnel, test procedures, and ensure the equipment's ability to detect and size wall thinning, pits, and cracks in a series of test plates with artificial defects. The performance demonstration test was performed on a tank mock-up in the 306E Facility located in the Hanford Site 300 Area. This mock-up also demonstrated the successful deployment and retrieval of the equipment. The PNNL report, "*Report on Performance Demonstration Test – PDT, May 2000,*" (Attachment 3 of *Ultrasonic Inspection Results of Double-Shell Tank 241-AP-108*, Jensen 2000b) provides the details of the complete evaluation of the P-scan system PDT.

This page intentionally left blank.

7.0 TANK 241-AP-106 HISTORY

The 241-AP Tank Farm consists of eight DSTs located in the 200 East Area of the Hanford Site. These underground tanks were built from 1983 through 1986, and are 75 feet in diameter with an operating capacity of 1.16 million gallons.

Tank 241-AP-106 entered service in August 1986 with a small volume of flush water. In 1988 the tank received a substantial volume of dilute non-complexed waste from the 242-A Evaporator and 3000 gallons of waste was sent to the Hanford Grout Treatment Facility for disposal. In early 1989 waste from tank 241-AP-106 was transferred to the 242-A Evaporator and a reduced volume of waste was received from the same. Tank 241-AP-106 received a small amount of dilute non-complexed waste from tank 241-AW-106 before transferring a majority of its inventory to tank 241-AP-105. In late 1989 the tank received its largest transfer to date from tank 241-AY-102 which was mostly B-Plant vessel cleanout and B-Plant strontium processing wastes. A second transfer from tank 241-AY-102 in 1989 filled tank 241-AP-106 close to capacity where it remained until March 1995.

Tank 241-AP-106 was almost emptied in March 1995 with a small transfer to tank 241-AW-102 and a larger transfer to tank 241-AP-108. It then began collecting small volumes of water and dilute non-complexed waste from various sources including B-Plant cells, the 300 and 400 areas, the 222-S Laboratory, T-Plant, and the Plutonium Finishing Plant Laboratories. The tank was again almost emptied in 1999 with another transfer to tank 241-AP-108. In 2000 more miscellaneous flush water was added with a substantial dilute non-complexed waste addition from tank 241-SY-102, leaving the tank about half-filled. (*Tank Characterization Report for Double-Shell Tank 241-AP-106*, Adams 2001).

Tank 241-AP-106 currently contains approximately 1,137,000 gallons of supernatant waste equivalent to a level of approximately 413 inches. The tank is categorized as sound. (*Waste Tank Summary Report for Month Ending September 30, 2004*, Hanlon 2004).

The waste level history since September 1986 is shown in Figure 7-1, based on data obtained from the Tank Waste Information Network System (TWINS)[1].

---

[1] TWINS, http://twins.pnl.gov/twins.htm, queried 12/01/2004 [Data Source: Measurements, SACS, Surface Level, Tank Name AP-106, All Measurement Date values]

Figure 7-1. Waste Level History of Double-Shell Tank 241-AP-106

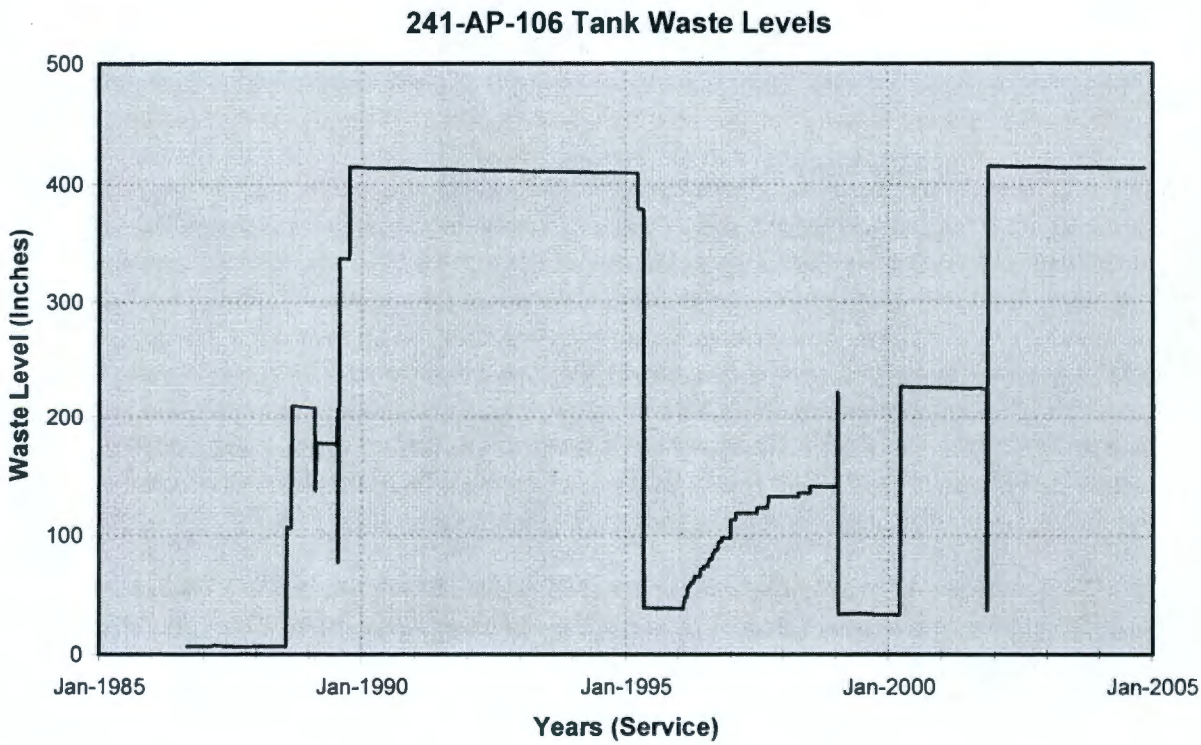

Since 1989, the minimum recorded waste level was approximately 33 inches (March 2000), and the maximum recorded waste level was approximately 415 inches (October 1989 and November-December 2001). During the 5-1/2 year period between October 1989 and March 1995, the waste level remained relatively constant, averaging 412 inches. Since November 2001, the waste level has also been relatively constant, averaging 414 inches.

Since July 1989, recorded temperatures of the tank have ranged from a maximum of 82°F (April 2000) to a minimum of 54°F (March 1996), and have averaged 66°F. This is based on data obtained from the TWINS[2].

[2] TWINS, http://twins.pnl.gov/twins.htm, queried 12/01/2004 [Data Source: Measurements, SACS, Tank Temperature Readings, Tank Name AP-106, All Measurement Date values].

8.0 GENERAL REQUIREMENTS AND INSPECTION SCOPE

FY 2005 Contract Number 21186, Release 30, specifies that the contractor provide (among others) the following deliverables to the Double-Shell Tank Integrity Project (DSTIP) organization:

- The contractor shall provide AP-106 NDE Support and Data Analysis
- The contractor shall prepare recommended engineering reports and studies as directed by the DSTIP project leads

The areas on the primary tank that were identified for UT inspection in the engineering task plan (Jensen 2005) and work package number 2E-04-1854 are described below.

Primary Tank Wall and Welds:

- A vertical strip (approximately 30 inches wide by 35 feet long) of the primary wall between the upper haunch transition and the lower knuckle for pits, cracks, and wall thinning. The vertical strip may be comprised of one or more strips whose total width is 30 inches.
- Twenty feet of the circumferential weld joining the cylinder to the lower knuckle, one vertical weld joining the lowest shell plate plates (about 10 feet of weld), and one vertical weld joining the next to the lowest shell plate plates (about 10 feet of weld). A minimum of twenty (20) feet of vertical weld shall be examined.

This page intentionally left blank.

9.0 EQUIPMENT SETUP AT AP TANK FARM

Prior to performing the actual inspection, the shield plug was removed from the 24 inch Riser 030, and a temporary cover and riser extension were secured to the riser. A portable enclosure was installed over the riser to provide the means for deploying the UT equipment and protecting the operators from the weather. An electric chain hoist, mounted to the roof frame, was used for maneuvering the equipment into position. The control center trailer was set up inside the AP Tank Farm's boundary fence, and the control cables were run along the ground to the equipment located at the riser. A typical tank farm setup for the AP-Farm is shown in Figure 9-1.

Figure 9-1. Field Set-Up at Riser for Double-Shell Tank on AP-Farm

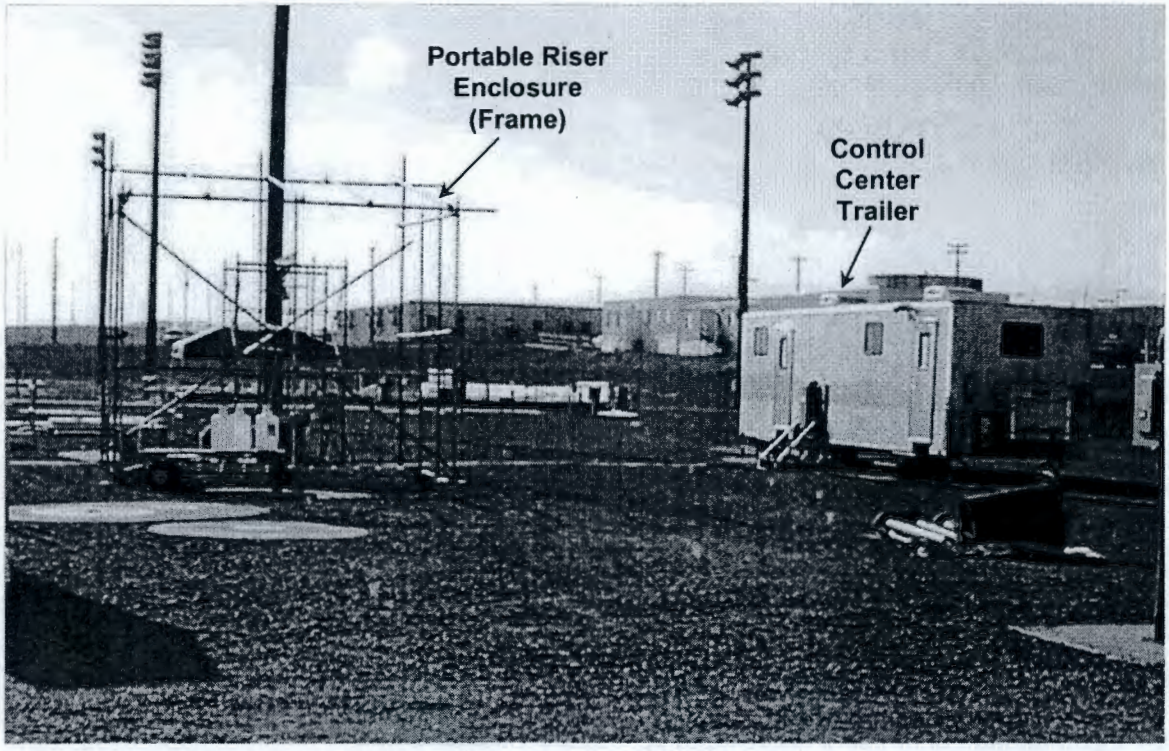

This page intentionally left blank.

10.0 INSPECTION RESULTS

Tank 241-AP-106 was fabricated from carbon steel plate. The primary tank's exterior surface varies from mill scale to coatings of various degrees of rust caused by in-service corrosion of carbon steel. A description of the plates is as follows with the location of the plates as shown in Figure 10-1 (*Tank Cross Section 241-AP Tanks*, Braun-Hanford 1986).

Primary Knuckle (top) – Connects dome of tank to side-wall

Primary wall – Consists of (from top to bottom)
Plate #1 – approximately 7 feet 8 inch tall, 1/2 inch nominal thickness
Plate #2 – approximately 7 feet 8 inch tall, 1/2 inch nominal thickness
Plate #3 – approximately 7 feet 8 inch tall, 9/16 inch nominal thickness
Plate #4 – approximately 9 feet tall, 3/4 inch nominal thickness
Plate #5 – approximately 2 feet tall, 7/8 inch nominal thickness

Primary Knuckle (bottom) – Approximately 15/16 inch nominal thickness. Connects sidewall of tank to primary tank bottom.

Primary Tank Bottom – Connected to primary knuckle. The outer three feet is approximately 7/8 inch nominal thickness, transitioning to 1/2 inch nominal thickness.

The P-scan crawler was deployed through the 24 inch diameter annulus inspection Riser 030 at the east side of tank 241-AP-106 for examinations of the primary tank wall, and the vertical and horizontal welds. All tank welds examined were in the "as-welded" condition. The various scan paths for the crawlers are shown in Figure 10-1, along with other pertinent tank information. Note that for Plate #1 only, the vertical wall scans were performed from the plate bottom to the plate top. This was due to the interference of the recently modified crawler cable bracket with the secondary dome if the scans were performed from the customary top to bottom. Both Plate #1 scans were also started at radial locations north of the centerline of the riser rather than at their usual locations (refer to scans for Plates #2 through #5). This was due to the presence of duct tape on the Plate #1 plate that prevented scans at the usual locations.

The UT P-scan data were examined by COGEMA Engineering's Level III certified inspector and by Limited Level II certified inspectors. The Limited Level II inspectors were "P-scan Limited", indicating that they are qualified to collect and examine the P-scan data, but are not qualified to interpret the data.

Figure 10-1. Schematic of UT Scan Paths on East Side of Tank 241-AP-106 Wall (via Riser 030)

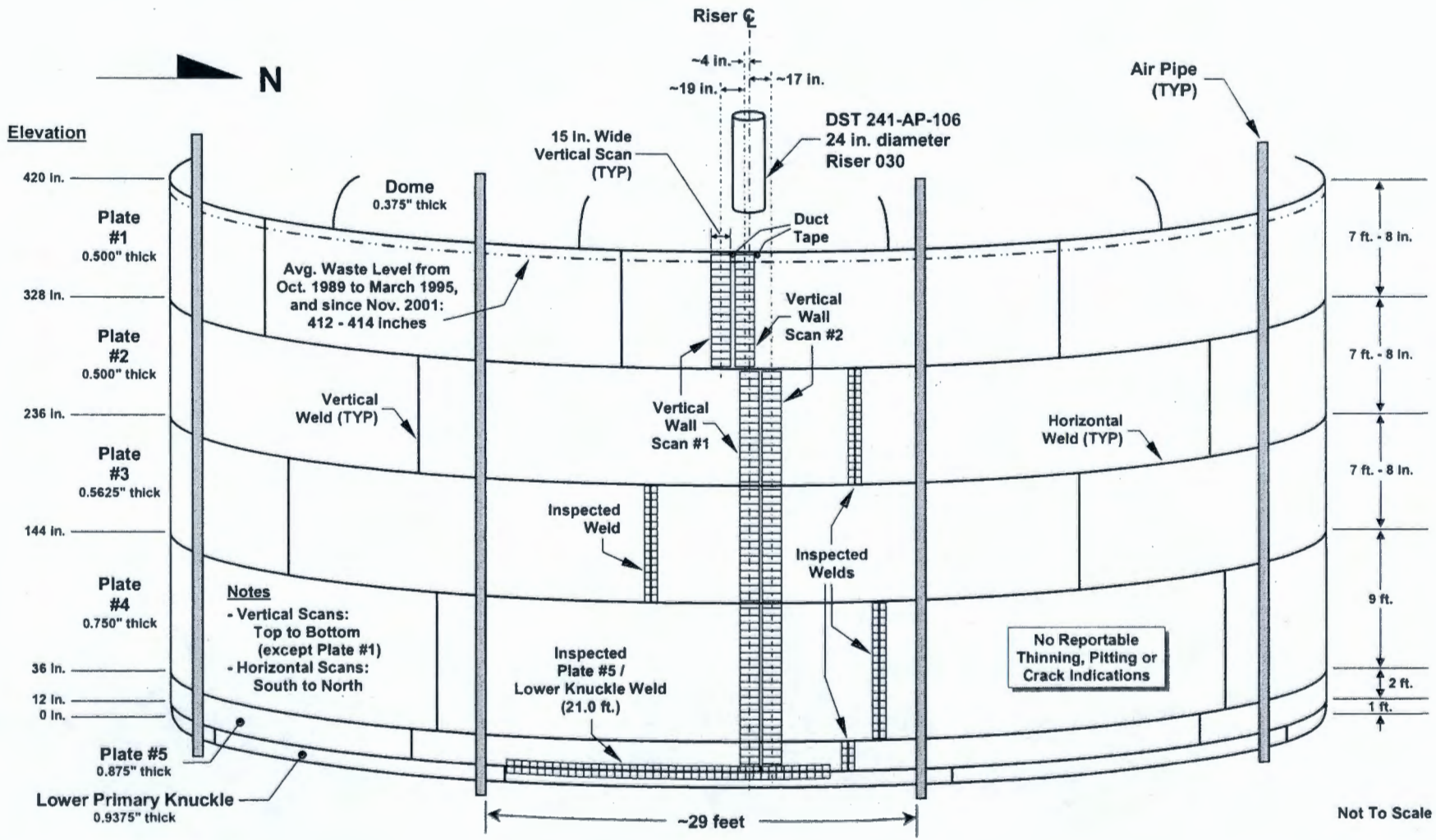

The following pages contain tables that present summary and detailed wall thickness data, which were derived from the COGEMA "Automated Ultrasonic Thickness Data Report Sheets". The inspection data sheets, the transducer calibration sheets, the original tank wall and weld scan map, and an interpretation of the data by an independent Level III certified NDE Inspector are included in Attachment 2 for the P-scan data.

Tables 10-1 through 10-4 show the summarized minimum wall thickness values obtained using the P-scan system on the primary tank vertical walls, vertical plate welds, and horizontal knuckle weld. Although the data are reported to three significant figures, the accuracy of the wall thickness data, based on the results of the performance demonstration test, is 0.012 inch root-mean-square (RMS).

Table 10-1. Summary of Primary Tank Wall Scan 1 (via Riser 030)

Plate Description	Elevation of Wall Scan (inches)	Wall Scan Distance (inches) [1]	Design Nominal (inches)	Measured Minimum (inches)	Scan Minimum % of Nominal
Plate #1	419.3 to 329	90.3	0.500	0.455	91.0%
Plate #2	327 to 239.6	87.4	0.500	0.498	99.6%
Plate #3	235 to 146.6	88.4	0.5625	0.553	98.3%
Plate #4	143 to 39.6	103.4	0.750	0.752	100.3%
Plate #5	35 to 15.1	19.9	0.875	0.854	97.6%

[1] All scan widths were 15 inches.

Table 10-2. Summary of Primary Tank Wall Scan 2 (via Riser 030)

Plate Description	Elevation of Wall Scan (inches)	Wall Scan Distance (inches) [1]	Design Nominal (inches)	Measured Minimum (inches)	Scan Minimum % of Nominal
Plate #1	419.3 to 329	90.3	0.500	0.505	101.0%
Plate #2	327 to 238.8	88.2	0.500	0.489	97.8%
Plate #3	235 to 146.4	88.6	0.5625	0.539	95.8%
Plate #4	143 to 38.9	104.1	0.750	0.747	99.6%
Plate #5	35 to 15.5	19.5	0.875	0.867	99.1%

[1] All scan widths were 15 inches.

Table 10-3. Summary of Primary Tank Weld Scans (via Riser 030)

Weld Description	Elevation of Weld Scan (inches)	Weld Scan Distance (inches) [1]	Design Nominal (inches)	Measured Minimum (inches)	Scan Minimum % of Nominal
Vertical Weld Plate #2	327 to 238	89.0	0.500	0.481	96.2%
Vertical Weld Plate #3	235 to 147.7	87.3	0.5625	0.532	94.6%
Vertical Weld Plate #4	143 to 42.1	100.9	0.750	0.723	96.4%
Vertical Weld Plate #5	35 to 14.7	20.3	0.875	0.848	96.9%

[1] Scan widths were 11.0 – 11.5 inches.

Table 10-4. Summary of Plate #5 / Knuckle Horizontal Weld Scans (via Riser 030)

Weld Description	Vertical Location of Weld Scan	Weld Scan Distance (inches) [1]	Design Nominal (inches)	Measured Minimum (inches)	Scan Minimum % of Nominal
Horizontal Weld Plate #5 to Knuckle, Plate #5 Side	From ~1 in. to ~4.85 in. above Plate #5 / Knuckle Weld	252.5	0.875	0.825	94.3%
Horizontal Weld Plate #5 to Knuckle, Knuckle Side	From ~1 in. to ~4.85 in. below Plate #5 / Knuckle Weld	252.5	0.9375	0.904	96.4%

[1] Scan widths were 9.7 inches

Tables 10-5 through 10-14 contain the detailed data for wall scans as presented in 12 inch long by 15 inch wide connecting scans. The detailed data for vertical and horizontal welds are presented in 12 inch long by 9.7 to 11.5 inch wide scans in Tables 10-15 through 10-20.

Table 10-5. Primary Tank Vertical Wall Scan 1 – Plate #1 (via Riser 030)

Scan I.D. Number (Data Sheets)	Elevation of Start of Wall Scan (inches)	Vertical Location of Wall Scan (inches)	Design Nominal (inches)	Measured Average (inches)	Measured Minimum (inches)
Scan "Vert. Wall / Plate 1" (Page Att. 2-3)	329	0 – 12 [1]	0.500	0.520	0.511
	341	12 – 24	0.500	0.525	0.518
	353	24 – 36	0.500	0.525	0.519
	365	36 – 48	0.500	0.525	0.504
	377	48 – 60	0.500	0.525	0.505
	389	60 – 72	0.500	0.525	0.518
	401	72 – 84	0.500	0.520	0.499
	413	84 – 90.3	0.500	0.515	0.455

[1] Scan start was 1 inch above the centerline of the second horizontal weld, and 19 inches south of the centerline of Plate #1 Scan 2; Scanned from bottom to top of plate; Scan width was 15 inches.

Table 10-6. Primary Tank Vertical Wall Scan 1 - Plate #2 (via Riser 030)

Scan I.D. Number (Data Sheets)	Elevation of Start of Wall Scan (inches)	Vertical Location of Wall Scan (inches)	Design Nominal (inches)	Measured Average (inches)	Measured Minimum (inches)
Scan "Vert. Wall / Plate 2" (Page Att. 2-5)	327	0 – 12 [1]	0.500	0.518	0.510
	315	12 – 24	0.500	0.520	0.518
	303	24 – 36	0.500	0.520	0.518
	291	36 – 48	0.500	0.520	0.518
	279	48 – 60	0.500	0.523	0.519
	267	60 – 72	0.500	0.522	0.498
	255	72 – 84	0.500	0.520	0.502
	243	84 – 87.4	0.500	0.518	0.499

[1] Scan start was 1 inch below the centerline of the second horizontal weld, and centerline of 24 inch Riser 030; Scan width was 15 inches.

Table 10-7. Primary Tank Vertical Wall Scan 1 - Plate #3 (via Riser 030)

Scan I.D. Number (Data Sheets)	Elevation of Start of Wall Scan (inches)	Vertical Location of Wall Scan (inches)	Design Nominal (inches)	Measured Average (inches)	Measured Minimum (inches)
Scan "Vert. Wall / Plate 3" (Page Att. 2-7)	235	0 – 12 [1]	0.5625	0.564	0.559
	223	12 – 24	0.5625	0.565	0.559
	211	24 – 36	0.5625	0.568	0.563
	199	36 – 48	0.5625	0.568	0.555
	187	48 – 60	0.5625	0.568	0.565
	175	60 – 72	0.5625	0.566	0.561
	163	72 – 84	0.5625	0.564	0.560
	151	84 – 88.4	0.5625	0.564	0.553

[1] Scan start was 1 inch below the centerline of the third horizontal weld, and centerline of 24 inch Riser 030; Scan width was 15 inches.

Table 10-8. Primary Tank Vertical Wall Scan 1 – Plate #4 (via Riser 030)

Scan I.D. Number (Data Sheets)	Elevation of Start of Wall Scan (inches)	Vertical Location of Wall Scan (inches)	Design Nominal (inches)	Measured Average (inches)	Measured Minimum (inches)
Scan "Vert. Wall / Plate 4" (Page Att. 2-9)	143	0 – 12 [1]	0.750	0.769	0.763
	131	12 – 24	0.750	0.769	0.766
	119	24 – 36	0.750	0.769	0.766
	107	36 – 48	0.750	0.769	0.752
	95	48 – 60	0.750	0.769	0.764
	83	60 – 72	0.750	0.769	0.765
	71	72 – 84	0.750	0.772	0.764
	59	84 – 96	0.750	0.770	0.763
	47	96 – 103.4	0.750	0.764	0.753

[1] Scan start was 1 inch below the centerline of the fourth horizontal weld, and centerline of 24 inch Riser 030; Scan width was 15 inches.

Table 10-9. Primary Tank Vertical Wall Scan 1 – Plate #5 (via Riser 030)

Scan I.D. Number (Data Sheets)	Elevation of Start of Wall Scan (inches)	Vertical Location of Wall Scan (inches)	Design Nominal (inches)	Measured Average (inches)	Measured Minimum (inches)
Scan "Vert. Wall / Plate 5" (Page Att. 2-11)	35	0 – 12 [1]	0.875	0.875	0.864
	23	12 – 19.9	0.875	0.873	0.854

[1] Scan start was 1 inch below the centerline of the fifth horizontal weld, and centerline of 24 inch Riser 030; Scan width was 15 inches.

Table 10-10. Primary Tank Vertical Wall Scan 2 – Plate #1 (via Riser 030)

Scan I.D. Number (Data Sheets)	Elevation of Start of Wall Scan (inches)	Vertical Location of Wall Scan (inches)	Design Nominal (inches)	Measured Average (inches)	Measured Minimum (inches)
Scan "Vert. Wall / 2nd / Plate 1" (Page Att. 2-13)	329	0 – 12 (1)	0.500	0.520	0.505
	341	12 – 24	0.500	0.525	0.510
	353	24 – 36	0.500	0.525	0.519
	365	36 – 48	0.500	0.525	0.513
	377	48 – 60	0.500	0.525	0.520
	389	60 – 72	0.500	0.525	0.519
	401	72 – 84	0.500	0.520	0.516
	413	84 – 90.3	0.500	0.520	0.510

(1) Scan start was 1 inch above the centerline of the second horizontal weld, and 4 inches south of the centerline of 24 inch Riser 030; Scanned from bottom to top of plate; Scan width was 15 inches.

Table 10-11. Primary Tank Vertical Wall Scan 2 – Plate #2 (via Riser 030)

Scan I.D. Number (Data Sheets)	Elevation of Start of Wall Scan (inches)	Vertical Location of Wall Scan (inches)	Design Nominal (inches)	Measured Average (inches)	Measured Minimum (inches)
Scan "Vert. Wall / 2nd / Plate 2" (Page Att. 2-15)	327	0 – 12 (1)	0.500	0.513	0.489
	315	12 – 24	0.500	0.515	0.512
	303	24 – 36	0.500	0.517	0.502
	291	36 – 48	0.500	0.517	0.502
	279	48 – 60	0.500	0.518	0.499
	267	60 – 72	0.500	0.519	0.513
	255	72 – 84	0.500	0.517	0.494
	243	84 – 88.2	0.500	0.515	0.496

(1) Scan start was 1 inch below the centerline of the second horizontal weld, and 17 inches north of the centerline of 24 inch Riser 030; Scan width was 15 inches.

Table 10-12. Primary Tank Vertical Wall Scan 2 - Plate #3 (via Riser 030)

Scan I.D. Number (Data Sheets)	Elevation of Start of Wall Scan (inches)	Vertical Location of Wall Scan (inches)	Design Nominal (inches)	Measured Average (inches)	Measured Minimum (inches)
Scan "Vert. Wall / 2nd / Plate 3" (Page Att. 2-17)	235	0 – 12 (1)	0.5625	0.567	0.539
	223	12 – 24	0.5625	0.570	0.555
	211	24 – 36	0.5625	0.570	0.560
	199	36 – 48	0.5625	0.572	0.560
	187	48 – 60	0.5625	0.572	0.558
	175	60 – 72	0.5625	0.570	0.553
	163	72 – 84	0.5625	0.568	0.551
	151	84 – 88.6	0.5625	0.565	0.548

(1) Scan start was 1 inch below the centerline of the third horizontal weld, and 17 inches north of the centerline of 24 inch Riser 030; Scan width was 15 inches.

Table 10-13. Primary Tank Vertical Wall Scan 2 - Plate #4 (via Riser 030)

Scan I.D. Number (Data Sheets)	Elevation of Start of Wall Scan (inches)	Vertical Location of Wall Scan (inches)	Design Nominal (inches)	Measured Average (inches)	Measured Minimum (inches)
Scan "Vert. Wall / 2nd / Plate 4" (Page Att. 2-19)	143	0 – 12 (1)	0.750	0.769	0.754
	131	12 – 24	0.750	0.768	0.765
	119	24 – 36	0.750	0.768	0.766
	107	36 – 48	0.750	0.769	0.766
	95	48 – 60	0.750	0.769	0.766
	83	60 – 72	0.750	0.769	0.765
	71	72 – 84	0.750	0.773	0.758
	59	84 – 96	0.750	0.771	0.765
	47	96 – 104.1	0.750	0.764	0.747

(1) Scan start was 1 inch below the centerline of the fourth horizontal weld, and 17 inches north of the centerline of 24 inch Riser 030; Scan width was 15 inches.

Table 10-14. Primary Tank Vertical Wall Scan 2 - Plate #5 (via Riser 030)

Scan I.D. Number (Data Sheets)	Elevation of Start of Wall Scan (inches)	Vertical Location of Wall Scan (inches)	Design Nominal (inches)	Measured Average (inches)	Measured Minimum (inches)
Scan "Vert. Wall / 2nd / Plate 5" (Page Att. 2-21)	35	0 – 12 (1)	0.875	0.875	0.867
	23	12 – 19.5	0.875	0.873	0.867

(1) Scan start was 1 inch below the centerline of the fifth horizontal weld, and 17 inches north of the centerline of 24 inch Riser 030; Scan width was 15 inches.

Table 10-15. Primary Tank Vertical Wall Weld Scan - Plate #2 (via Riser 030)

Scan I.D. Number (Data Sheets)	Elevation of Start of Weld Scan (inches)	Vertical Location of Weld Scan (inches)	Design Nominal (inches)	Measured Average (inches)	Measured Minimum (inches)
Scan "Vert. Weld / Plate 2" (Page Att. 2-23)	327	0 – 12 (1)	0.500	0.510	0.491
	315	12 – 15.3	0.500	0.510	0.499
Scan "Vert. Weld / Plate 2A" (Page Att. 2-25)	314.1	0 – 12 (2)	0.500	0.510	0.500
	302.1	12 – 24	0.500	0.510	0.493
	290.1	24 – 36	0.500	0.510	0.500
	278.1	36 – 48	0.500	0.510	0.495
	266.1	48 – 60	0.500	0.510	0.488
	254.1	60 – 72	0.500	0.510	0.481
	242.1	72 – 76.1	0.500	0.510	0.501

(1) Scan start was 1 inch below the centerline of the second horizontal weld; Scan width was 11.4 inches.

(2) Start of scan @ 12.9 inches of scan Vert. Weld / Plate 2; Scan width was 11.4 inches.

Table 10-16. Primary Tank Vertical Wall Weld Scan - Plate #3 (via Riser 030)

Scan I.D. Number (Data Sheets)	Elevation of Start of Weld Scan (inches)	Vertical Location of Weld Scan (inches)	Design Nominal (inches)	Measured Average (inches)	Measured Minimum (inches)
Scan "Vert. Weld / Plate 3" (Page Att. 2-27)	235	0 – 12 (1)	0.5625	0.550	0.537
	223	12 – 24	0.5625	0.550	0.532
	211	24 – 36	0.5625	0.550	0.538
	199	36 – 43.5	0.5625	0.550	0.543
Scan "Vert. Weld / Plate 3A" (Page Att. 2-29)	191.5	0 – 12 (2)	0.5625	0.550	0.539
	179.5	12 – 24	0.5625	0.550	0.538
	167.5	24 – 36	0.5625	0.550	0.538
	155.5	36 – 43.8	0.5625	0.550	0.538

(1) Scan start was 1 inch below the centerline of the third horizontal weld; Scan width was 11.5 inches.

(2) Start of scan @ end of scan Vert. Weld / Plate 3; Scan width was 11.5 inches.

Table 10-17. Primary Tank Vertical Wall Weld Scan - Plate #4 (via Riser 030)

Scan I.D. Number (Data Sheets)	Elevation of Start of Weld Scan (inches)	Vertical Location of Weld Scan (inches)	Design Nominal (inches)	Measured Average (inches)	Measured Minimum (inches)
Scan "Vert. Weld / Plate 4" (Page Att. 2-31)	143	0 – 12 (1)	0.750	0.755	0.723
	131	12 – 24	0.750	0.755	0.739
	119	24 – 36	0.750	0.755	0.740
	107	36 – 48	0.750	0.760	0.740
	95	48 – 60	0.750	0.760	0.744
	83	60 – 72	0.750	0.760	0.737
	71	72 – 81.1	0.750	0.760	0.741
Scan "Vert. Weld / Plate 4A" (Page Att. 2-33)	61.9	0 – 8 (2)	0.750	0.760	0.744
Scan "Vert. Weld / Plate 4B" (Page Att. 2-35)	53.9	0 – 11.8 (3)	0.750	0.755	0.735

(1) Scan start was 1 inch below the centerline of the fourth horizontal weld; Scan width was 11.4 inches.

(2) Start of scan @ end of scan Vert. Weld / Plate 4; Scan width was 11.4 inches.

(3) Start of scan @ end of scan Vert. Weld / Plate 4A; Scan width was 11.4 inches.

Table 10-18. Primary Tank Vertical Wall Weld Scan - Plate #5 (via Riser 030)

Scan I.D. Number (Data Sheets)	Elevation of Start of Weld Scan (inches)	Vertical Location of Weld Scan (inches)	Design Nominal (inches)	Measured Average (inches)	Measured Minimum (inches)
Scan "Vert. Weld / Plate 5" (Page Att. 2-37)	35	0 – 12 [1]	0.875	0.865	0.849
	23	12 – 20.3	0.875	0.865	0.848

[1] Scan start was 1 inch below the centerline of the fifth horizontal weld; Scan width was 11.0 inches.

Table 10-19. Primary Tank Horizontal Weld - Plate #5 to Knuckle Scan, Plate #5 Side (via Riser 030)

Scan I.D. Number (Data Sheets)	Elevation of Horizontal Weld Scan (inches)	Horizontal Location of Weld Scan, Plate #5 Side (inches)	Design Nominal (inches)	Measured Average (inches)	Measured Minimum (inches)
Scan "Horz. Weld / Plate / Knuckle" (Page Att. 2-44)	From ~1 in. to ~4.85 in. above Plate #5 / Knuckle Weld	0 – 12 [1]	0.875	0.865	0.852
		12 – 24	0.875	0.865	0.852
		24 – 36	0.875	0.865	0.853
		36 – 48	0.875	0.865	0.852
		48 – 60	0.875	0.865	0.857
		60 – 72	0.875	0.865	0.860
		72 – 84	0.875	0.865	0.861
		84 – 96	0.875	0.865	0.861
		96 – 108	0.875	0.865	0.850
		108 – 120	0.875	0.865	0.861
Scan "Horz. Weld / Plate / KnuckleA" (Page Att. 2-45)	From ~1 in. to ~4.85 in. above Plate #5 / Knuckle Weld	0 – 12 [2]	0.875	0.865	0.861
		12 – 24	0.875	0.865	0.842
		24 – 36	0.875	0.865	0.852
		36 – 48	0.875	0.865	0.861
		48 – 60.5	0.875	0.865	0.852
Scan "Horz. Weld / Plate / KnuckleB" (Page Att. 2-46)	From ~1 in. to ~4.85 in. above Plate #5 / Knuckle Weld	0 – 12 [3]	0.875	0.865	0.851
		12 – 24	0.875	0.865	0.852
		24 – 36	0.875	0.865	0.846
		36 – 48	0.875	0.865	0.856
		48 – 60	0.875	0.860	0.825
		60 – 72	0.875	0.855	0.832

[1] Start of scan @ knuckle side vertical weld, north of south air line south of 24 inch riser; Scan width was 9.7 inches.

[2] Start of scan @ end of scan Horz. Weld / Plate / Knuckle; Scan width was 9.7 inches.

[3] Start of scan @ end of scan Horz. Weld / Plate / KnuckleA; Scan width was 9.7 inches.

Table 10-20. Primary Tank Horizontal Weld - Plate #5 to Knuckle Scan, Knuckle Side (via Riser 030)

Scan I.D. Number (Data Sheets)	Elevation of Horizontal Weld Scan (inches)	Horizontal Location of Weld Scan, Knuckle Side (inches)	Design Nominal (inches)	Measured Average (inches)	Measured Minimum (inches)
Scan "Horz. Weld / Plate / Knuckle" (Page Att. 2-47)	From ~1 in. to ~4.85 in. below Plate #5 / Knuckle Weld	0 – 12 (1)	0.9375	0.945	0.939
		12 – 24	0.9375	0.945	0.933
		24 – 36	0.9375	0.945	0.920
		36 – 48	0.9375	0.945	0.936
		48 – 60	0.9375	0.945	0.926
		60 – 72	0.9375	0.945	0.921
		72 – 84	0.9375	0.940	0.935
		84 – 96	0.9375	0.940	0.929
		96 – 108	0.9375	0.940	0.919
		108 – 120	0.9375	0.940	0.926
Scan "Horz. Weld / Plate / KnuckleA" (Page Att. 2-48)	From ~1 in. to ~4.85 in. below Plate #5 / Knuckle Weld	0 – 12 (2)	0.9375	0.940	0.933
		12 – 24	0.9375	0.940	0.911
		24 – 36	0.9375	0.940	0.923
		36 – 48	0.9375	0.940	0.930
		48 – 60.5	0.9375	0.940	0.912
Scan "Horz. Weld / Plate / KnuckleB" (Page Att. 2-49)	From ~1 in. to ~4.85 in. below Plate #5 / Knuckle Weld	0 – 12 (3)	0.9375	0.935	0.922
		12 – 24	0.9375	0.930	0.924
		24 – 36	0.9375	0.930	0.908
		36 – 48	0.9375	0.925	0.904
		48 – 60	0.9375	0.925	0.910
		60 – 72	0.9375	0.935	0.924

(1) Start of scan @ knuckle side vertical weld, north of south air line south of 24 inch riser; Scan width was 9.7 inches.

(2) Start of scan @ end of scan Horz. Weld / Plate / Knuckle; Scan width was 9.7 inches.

(3) Start of scan @ end of scan Horz. Weld / Plate / KnuckleA; Scan width was 9.7 inches.

11.0 EVALUATION OF INSPECTION RESULTS

The results from the inspection of tank 241-AP-106 are evaluated and compared with results of all other tank ultrasonic inspections.

11.1 TANK 241-AP-106 UT DATA EVALUATION

The UT P-scan data were interpreted by W. H. Nelson, COGEMA Engineering's Level III certified inspector. The P-scan data were also examined by J. B. Elder, an independent Level III certified NDE Inspector. Mr. Elder independently evaluated the P-scan raw data and concurred with COGEMA Engineering's interpretation (Attachment 2). The P-scan data have also been evaluated by PNNL as a third party review. Their results and conclusions were found to be consistent with those described in this report. Their P-scan data review is *Ultrasonic Examination Of Double-Shell Tank 241-AP-106 - Examination Completed November 2004*, PNNL report number PNNL-14971, Rev. 0 (Attachment 3).

The results of the tank 241-AP-106 UT inspections indicated no reportable wall thinning, no pit-like indications, and no cracking in any of the areas examined. Figure 11-1 illustrates all of the "as-found" average wall thickness measurements of the primary tank vertical wall scans generated from the P-scan Inspection Data Sheets (Attachment 2). Each measurement plotted on Figure 11-1 is the average of all data collected over a 12 inch long by 15 inch wide scan area. Areas of interest for tank 241-AP-106 are the vapor space above the current liquid waste, the current liquid-vapor interface (approximately 34.4 feet or 413 inches), and the liquid region.

The overall average wall thickness measurements for the walls and weld HAZs are tabulated in Table 11-1. The UT data show that the primary tank average wall thickness values generally exceed the nominal values specified in the design documents. The UT data, when compared to construction specifications, drawings, standards, and codes (*241-AP Double-Shell Tanks Integrity Assessment Report*, Jensen 1999), reveal that the as-found condition of the tank plates and welds are all within the allowable design limits. A summary of the results associated with the areas examined is presented below.

Primary Tank Wall: Two vertical strips encompassing Plate #1 through Plate #5 were examined. The overall average wall thickness for each plate vertical scan varied only 0.005 inches from plate to plate (for same nominal-thickness plates) and a maximum of only 0.004 inches within the same plate (for all plates). All overall plate wall averages were between 0.001 inches less than to 0.023 inches greater than their nominal plate thickness values. No reportable wall thinning, pitting indications or crack-like indications were found.

Primary Tank Welds: One vertical weld in each of the four Plates #2 through #5 was examined. The plate walls adjacent to the welds averaged 0.013 inches less than (Plate #3) to 0.010 inches greater than (Plate #2) their nominal plate thickness values.. No crack-like indications were found. There were also no reportable wall thinning or pitting indications found.

Figure 11-1. Scan Data Average Wall Thickness Compared to Nominal Plate Thickness

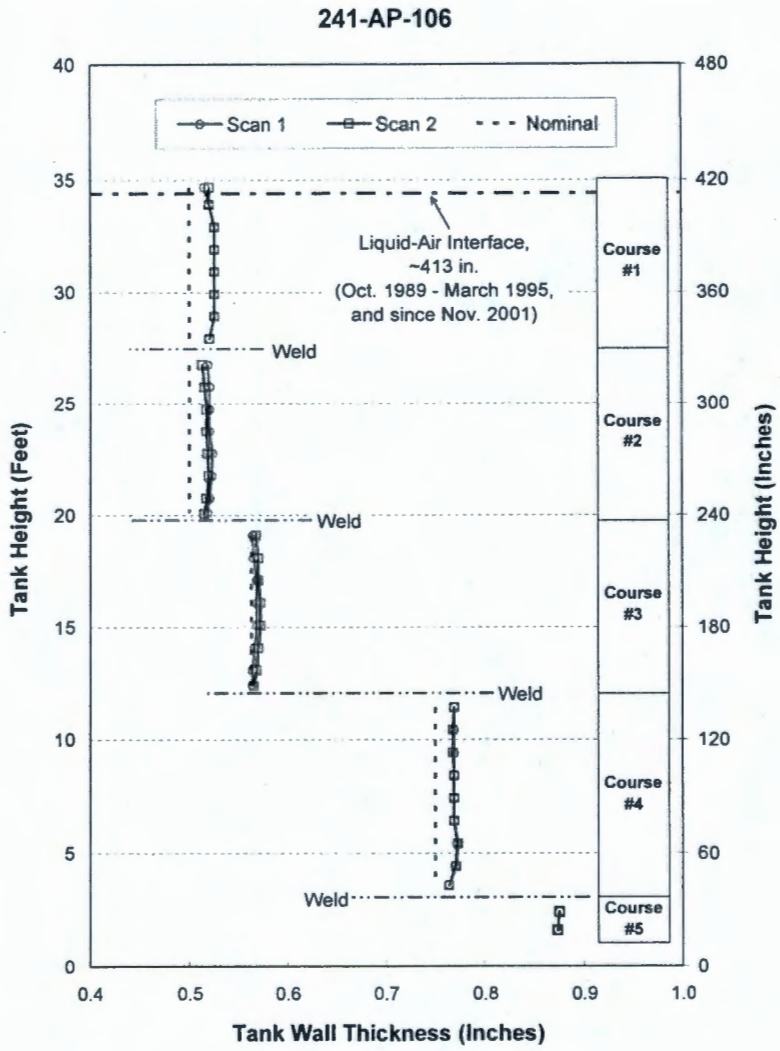

Primary Tank Knuckle-to-Shell Weld: A 21.0 feet region of the horizontal knuckle-to-shell weld was examined. No crack-like indications were found. There were also no reportable wall thinning or pitting indications found. The plate walls adjacent to the weld averaged 0.011 inches less than (Plate #5 side) to 0.001 inches greater than (Knuckle side) their nominal plate thickness values.

Table 11-1. Average Tank Wall Thickness Values

Scan Description	Scan Location	Scan 1 Average (inches)	Scan 2 Average (inches)	Average Thickness (inches)	Nominal Thickness (inches)	Average minus Nominal (inches)
Vertical Wall Scans [1]	Plate #1	0.5225	0.5231	0.5228	0.500	+ 0.023
	Plate #2	0.5201	0.5164	0.5183	0.500	+ 0.018
	Plate #3	0.5659	0.5693	0.5676	0.5625	+ 0.005
	Plate #4	0.7689	0.7689	0.7689	0.750	+ 0.019
	Plate #5	0.8740	0.8740	0.8740	0.875	– 0.001
Vertical Welds	Plate #2	0.5100	n/a [2]	0.5100	0.500	+ 0.010
	Plate #3	0.5500	n/a	0.5500	0.5625	– 0.013
	Plate #4	0.7578	n/a	0.7578	0.750	+ 0.008
	Plate #5	0.8650	n/a	0.8650	0.875	– 0.010
Lower Primary Knuckle Weld	Plate #5 Side	0.8643	n/a	0.8643	0.875	– 0.011
	Knuckle Side	0.9386	n/a	0.9386	0.9375	+ 0.001

(1) Scan 1 and Scan 2 were on the same plate.

(2) n/a – not applicable (only one scan performed)

11.2 DST ULTRASONIC INSPECTION DATA RESULTS COMPARISON

The following Tables 11-2 and 11-3 provide a summary of primary tank vertical wall inspection results and a comparison of primary tank wall thinning.

Table 11-2 reports the inspection results chronologically according to fiscal year (October 1 through September 30).

Table 11-2. Double-Shell Tanks Chronological Inspection Results Findings

Tank	Inspection Year (FY)	Reportable Plate Crack Indication	Reportable Plate Pitting	Reportable Plate Thinning	Reportable Weld Thinning, Pitting or Cracking
AW-103	1997	None	None	None	None
AN-107	1998	None	None	None	None
AN-106	1999	None	None	None	None
AN-105	1999	None	None	Two very minute areas of a plate (20% maximum reduction in thickness) [a]	None
AZ-101	1999	None	None	One area of a plate (11.4% maximum reduction in thickness)	None
AY-102	1999	None	None	None	None
AP-107	2000	None	None	None	None
AP-108	2000	None	None	Two minute areas of a plate (13.8% maximum reduction in thickness).	None [b]
AW-101	2001	None	None	A pit like indication in a very minute area of a plate (16% maximum reduction in thickness).	None
AW-105	2001	None	None	None	None
AY-101	2001	None	Pit-like indication at historical liquid-air interface	Some pit-like indications identified as thinning	Three areas of 10% wall thinning in vertical welds
AN-102	2001	None	None	One minute area of a plate (11% maximum reduction in thickness)	None
AN-101	2002	None	None	One small area of a plate (12 % maximum reduction in thickness)	Four local areas near vertical welds (14% maximum reduction in thickness)

(Cont. on next page)

Table 11-2. (Cont.) Double-Shell Tanks Chronological Inspection Results Findings

Tank	Inspection Year (FY)	Reportable Plate Crack Indication	Reportable Plate Pitting	Reportable Plate Thinning	Reportable Weld Thinning, Pitting or Cracking
AW-106	2002	None	None	One small area	10.4% maximum reduction in thickness
AY-101	2002	Not Investigated	None	72 areas of >10% wall thinning, most in the historical liquid-air interface in Plate #2 (20.2% maximum reduction in thickness)	Not Investigated
AW-104	2002	None	None	None	None
AW-102	2002 & 2003 [c]	None	None	None	None
AN-105	2002	None	None	None	Not Investigated
AP-101	2003	None	None	None	None
AP-105	2003	None	None	None	None
AP-103	2003	None	None	None	None [d]
AZ-102	2003	None	None	Six small areas in the vicinity of the liquid-air interface in Plate #2 (13.2% to 17.8% maximum reduction in thickness)	Three small areas of wall thinning near the Plate #1 vertical weld (10.9% to 16.8% maximum reduction in thickness)
SY-103	2004	None	None	Six small areas in the Plate #1 Vapor Space (10.4% to 12.8% maximum reduction in thickness)	None
SY-101	2004	None	None	Numerous areas in the vicinity of the historical liquid-air interface on Plate #1 (10.4% to 18.4% maximum reduction in thickness)	Numerous areas in Plate #1 and two areas in Plate #2 (10.6% to 17.3% maximum reduction in thickness)
SY-102	2004	None	None	Numerous areas in Plate #1 (10.1% to 12.5% maximum reduction in thickness)	One small area in Plate #1 (10.7% maximum reduction in thickness)

(Cont. on next page)

Table 11-2. (Cont.) Double-Shell Tanks Chronological Inspection Results Findings

Tank	Inspection Year (FY)	Reportable Plate Crack Indication	Reportable Plate Pitting	Reportable Plate Thinning	Reportable Weld Thinning, Pitting or Cracking
AP-104	2004	None	None	None	None
AP-106	2005	None	None	None	None

(a) Based on a review of the tank 241-AN-105 data gathering technique in FY 1999, prompted by the FY 2002 results, the FY 1999 wall thinning data is considered questionable.

(b) Although below reporting criteria at the time, one linear crack-like indication 6 inch long by 0.142 inch deep in a nominal 0.750 inch thick plate was observed. Subsequent examination of tank 241-AP-108 in FY 2002 revealed no change in size.

(c) Primary knuckle examination using T-SAFT conducted in FY 2003.

(d) One linear crack-like indication 2.92 inches long in the weld heat-affected zone of a nominal 0.875 inch thick plate was detected. A follow-up inspection determined that the indication is a small area of incomplete fusion that is not open to either surface of the tank.

The inspection results in Table 11-2 show that the overall condition of the inspected tanks is satisfactory. Defects or minute reportable localized plate thinning may be due to various reasons, such as fabrication defects, construction damage or in-service corrosion.

Wall thickness data gathered from ultrasonic examination of twenty-five DSTs were compared to evaluate the degree of wall thinning that may have occurred among the tanks examined. These wall thickness data do not allow a direct calculation of wall thinning, since no measurements were made of original plate thicknesses at the time of construction. However, wall thickness data from ultrasonic testing may be compared to the specified nominal plate thickness. This assessment used the minimum wall thickness in each scanning area (generally 12 inches by 15 inches) from the vertical wall scans and then calculated the average for each plate using the minimum thickness values.

Table 11-3 provides a summary of wall thinning, defined as nominal plate thickness minus average minimum plate thickness[3], by nominal plate size, and by DST examined. The negative values in the table indicate where the average of all minimum values of plate thickness exceeds nominal plate thickness. The Table also provides the calculated average wall thinning and associated standard deviation by DST examined for all nominal plate thicknesses, and by nominal plate thickness for all DSTs examined.

Tank 241-AP-106 did not exhibit any significant thinning. Small degrees of average wall thinning were observed in the 0.5625 inch thick Plate #3 (0.006 inches) and in the 0.875 inch thick Plate #5 (0.012 inches).

[3] Average minimum plate thickness is defined as the average of all the minimum measured thicknesses for each scanning area (generally 12 inches by 15 inches) for a given plate size and DST.

Table 11-3. Tank Wall Thinning By Nominal Plate Size

DST	FY Examined	Wall Thinning* By Nominal Plate Size (Inches)						
		0.375"	0.500"	0.5625"	0.750"	0.875"	AVG	STD DEV
AN-101	2002	n/a	0.008	n/a	0.027	0.015	0.013	0.014
AN-102	2001	n/a	0.004	n/a	0.003	0.005	0.004	0.016
AN-105	1999	n/a	0.026	n/a	0.007	0.001	0.019	0.032
AN-105	2002	n/a	0.015	n/a	n/exam.	n/exam.	0.015	0.021
AN-106	1999	n/a	0.006	n/a	0.015	0.012	0.009	0.009
AN-107	1998	n/a	-0.018	n/a	-0.015	0.013	-0.016	0.017
AP-101	2003	n/a	-0.008	-0.003	-0.002	0.010	-0.004	0.008
AP-103	2003	n/a	0.008	-0.004	-0.009	0.007	0.000	0.012
AP-104	2004	n/a	-0.006	-0.016	-0.016	0.011	-0.010	0.014
AP-105	2003	n/a	0.004	-0.006	-0.002	0.010	0.000	0.009
AP-106	2005	n/a	-0.007	0.006	-0.012	0.012	-0.004	0.012
AP-107	2000	n/a	-0.011	-0.012	-0.017	-0.013	-0.013	0.008
AP-108	2000	n/a	-0.017	-0.012	-0.011	-0.005	-0.014	0.016
AW-101	2001	n/a	0.008	n/a	0.014	0.020	0.010	0.013
AW-102	2002	n/a	-0.019	n/a	-0.006	0.008	-0.014	0.012
AW-103	1997	n/a	-0.010	n/a	-0.005	0.004	-0.007	0.008
AW-104	2002	n/a	-0.036	n/a	-0.031	-0.007	-0.033	0.011
AW-105	2001	n/a	0.000	n/a	0.008	-0.003	0.002	0.018
AW-106	2002	n/a	-0.004	n/a	0.015	0.000	0.001	0.016
AY-101	2001	-0.011	0.030	n/a	0.018	0.012	0.030	0.029
AY-102	1999	-0.021	0.001	n/a	0.008	n/a	0.000	0.012
AZ-101	1999	0.021	0.027	n/a	0.020	0.003	0.024	0.011
AZ-102	2003	0.017	0.007	n/a	-0.011	-0.004	0.002	0.019
SY-101	2004	0.056	0.009	n/a	0.026	-0.030	0.015	0.020
SY-102	2004	0.042	0.007	n/a	0.009	0.031	0.012	0.014
SY-103	2004	0.041	0.008	n/a	0.019	-0.022	0.012	0.015
AVG:		0.021	0.001	-0.007	0.003	0.004		
STD DEV:		0.028	0.022	0.010	0.019	0.015		

* Thinning = nominal plate size – minimum thickness
n/a – not applicable; n/exam. – not examined

This page intentionally left blank.

12.0 FINDINGS, CONCLUSIONS, AND RECOMMENDATIONS

The findings, conclusions, and recommendations from the UT inspection of DST 241-AP-106 are listed below.

- The primary wall vertical scans yielded overall average wall thickness values that generally exceeded the nominal values. The average wall thickness values ranged from 0.001 inches less than (Plate #5) to 0.023 inches greater than (Plate #1) their nominal plate thickness values.

- No reportable wall thinning was detected in any of the areas examined. Small degrees of average wall thinning were observed in the 0.5625 inch thick Plate #3 (0.006 inches) and in the 0.875 inch thick Plate #5 (0.012 inches). Of the 12 inch long vertical wall plate scans yielding minimums falling below the nominal values, the greatest deviation was 9.0% below the nominal (Plate #1, Scan 1), where reportable wall thinning is defined as greater than 10% below the nominal.

- No reportable pitting indications nor any crack-like indications were detected in any of the vertical wall plates.

- No crack-like indications were detected in any of the weld heat-affected zones.

- No reportable wall thinning or reportable pitting indications were detected in any of the weld heat-affected zones. The primary tank vertical weld scans (Plates #2 through #5) and the knuckle-to-shell horizontal weld scan (Plate #5 to lower knuckle) yielded overall average wall thickness values that ranged from 0.013 inches less than (Plate #3) to 0.010 inches greater than (Plate #2) the nominal values.

- According to a recent Tank Integrity Assessment Project DST Lifecycle Schedule, tank 241-AP-106 is scheduled for its second, standard UT examination in about nine years. Based on the results of this UT examination, it is recommended that this schedule be maintained – there is no reason to perform any near-term follow-up inspections on this tank. Following the second UT examination, inspection parameters such as wall thinning rates can be calculated and used to better quantify and evaluate any continual wall thinning or degradation.

  A visual examination of tank 241-AP-106 is scheduled in FY 2009 that will include visually examining the internal primary tank wall.

This page intentionally left blank.

13.0 REFERENCES

Adams, M. R., 2001, *Tank Characterization Report for Double-Shell Tank 241-AP-106*, HNF-SD-WM-ER-361, Rev. 2, CH2M HILL Hanford Group, Inc., Richland, Washington.

Bandyopadhyay, K. K., S. Bush, M. Kassir, B. Mather, P. Shewmon, M. Streicher, B. Thompson, D. van Rooyen, and J. Weeks. 1997. *Guidelines for Development of Structural Integrity Programs for DOE High-Level Waste Storage Tanks*, BNL-52527, Brookhaven National Laboratory, Upton, New York.

Braun-Hanford, 1986, *Tank Cross Section 241-AP Tanks*, H-2-90534, Rev. 3, Braun-Hanford Co., Richland, Washington.

Hanford Federal Facility Agreement and Consent Order (HFFACO), 2003, by the Washington State Department of Ecology, the United States Environmental Protection Agency, and the United States Department of Energy, 89-10 REV. 6, as amended through April 24, 2003.

Hanlon, B. M., 2004, *Waste Tank Summary Report for Month Ending September 30, 2004*, HNF-EP-0182, Rev 198, CH2M HILL Hanford Group, Inc., Richland, Washington.

Jensen, C. E. 1995. *Acceptance Criteria for Non-Destructive Examination of Double-Shell Tanks*, WHC-SD-WM-AP-036, Revision 0, Westinghouse Hanford Company, Richland, Washington.

Jensen, C. E., 1999, *241-AP Double-Shell Tanks Integrity Assessment Report*, HNF-4958, Rev. 0, Lockheed Martin Hanford Corporation, Richland, Washington.

Jensen, C. E., 2000, *Engineering Task Plan for the Ultrasonic Inspection of Hanford Double-Shell Tanks - FY2000*, RPP-5583, Rev. 0, CH2M HILL Hanford Group, Inc., Richland, Washington.

Jensen, C. E., 2000a, *Engineering Task Plan for the Ultrasonic Inspection of Hanford Double-Shell Tanks - FY2001*, RPP-6839, Rev. 0, CH2M HILL Hanford Group, Inc., Richland, Washington.

Jensen, C. E., 2000b, *Ultrasonic Inspection Results of Double-Shell Tank 241-AP-108*, RPP-6684, Rev. 0-A, CH2M HILL Hanford Group, Inc., Richland, Washington.

Jensen, C. E., 2002, *Engineering Task Plan for the Ultrasonic Inspection of Hanford Double-Shell Tanks - FY2002*, RPP-7869, Rev. 0C, CH2M HILL Hanford Group, Inc., Richland, Washington.

Jensen, C. E., 2002a, *Engineering Task Plan for the Ultrasonic Inspection of Hanford Double-Shell Tanks 241-AP-108, 241-AY-101, and 241-AZ-102 - FY2002*, RPP-8867, Rev. 0B, CH2M HILL Hanford Group, Inc., Richland, Washington.

Jensen, C. E., 2002b, *Engineering Task Plan for the Ultrasonic Inspection of Hanford Double-Shell Tanks - FY2003*, RPP-11832, Rev. 0, CH2M HILL Hanford Group, Inc., Richland, Washington.

Jensen, C. E., 2003, *Engineering Task Plan for the Ultrasonic Inspection of Hanford Double-Shell Tanks - FY2004*, RPP-17750, Rev. 0, CH2M HILL Hanford Group, Inc., Richland, Washington.

Jensen, C. E., 2003a, *Ultrasonic Inspection Results for Double-Shell Tank 241-AP-103*, RPP-13802, Rev. 0-A, CH2M HILL Hanford Group, Inc., Richland, Washington.

Jensen, C. E., 2005, *Engineering Task Plan for the Ultrasonic Inspection of Hanford Double-Shell Tanks - FY2005*, RPP-22571, Rev. 0, CH2M HILL Hanford Group, Inc., Richland, Washington.

Leshikar, G. A., 1997, *Final Report - Ultrasonic Examination of Tank 241-AW-103 Walls*, HNF-SD-WM-TRP-282, Rev. 0, SGN Eurisys Services Corporation, Richland, Washington.

Pfluger, D. C., 1999, *Engineering Task Plan for the Ultrasonic Inspection of Hanford Double-Shell Tanks*, HNF-2820, Rev. 2, Lockheed Martin Hanford Corporation, Richland, Washington.

Silver, D., 2000, *Administrative Order No.00NWPKW-1251, Failure to Comply with Major Milestone M-32 of the Tri-Party Agreement*, Washington State Department of Ecology, Olympia, Washington.

ATTACHMENT 1

AUTOMATED ULTRASONIC EXAMINATION FOR CORROSION AND CRACKING

**(COGEMA Engineering Corporation
Procedure COGEMA-SVUT-INS-007.3, Rev. 2
Effective: December 16, 2003)**

UNCONTROLLED COPY

This page intentionally left blank.

AUTOMATED ULTRASONIC EXAMINATION FOR CORROSION AND CRACKING

1.0 PURPOSE

This procedure establishes the method, equipment, and requirements for automated, direct contact ultrasonic test (UT) straight-beam, thickness measurements, angle beam flaw detection, and sizing, in carbon steel waste storage tanks utilizing the "P-scan" ultrasonic imaging system.

2.0 SCOPE

2.1 Requirements

The requirements herein are applicable to weld inspection, crack detection, sizing, wall thickness measurement, and the detection of wall thinning conditions, such as pitting, erosion, and corrosion in double shell tanks from 0.100 inches to 1.0 inch in thickness. At least one side must be accessible and the component surface to be measured must be parallel with the opposite surface. The requirements are also applicable to the automated UT detection and depth sizing of surface connected planar flaws.

2.2 Scanning

Scanning is performed using remotely controlled automatic scanners.

2.3 Examinations

Examinations shall be performed from inside the annulus of the double shell tanks.

2.4 Instructions

This procedure provides the instructions for the use of Tip Diffraction Techniques including the Absolute Arrival Time Technique (AATT), and the Relative Arrival Time Technique (RATT), for the sizing of planar flaws.

2.5 Methodology

The methodology in this procedure meets the requirements as addressed in Reference 4.1 as applicable to meet the requirements for inspection of double shell tanks.

3.0 RESPONSIBILITIES

Only certified Level II or Level III ultrasonic examiners shall interpret data to determine whether it represents relevant or non-relevant indication in accordance with the applicable specification. Level III ultrasonic examiners shall review all data collected prior to issuing a final report.

4.0 REFERENCES

4.1 ASME Boiler & Pressure Vessel Code, Section V, Article 4, 1995 Edition.

4.2 COGEMA SV-CP-PRC-014, *Qualification and Certification OF NDE Personnel.*

4.3 COGEMA SVAD-PRC-001, *Nondestructive Examination Administrative Procedure.*

4.4 COGEMA SVUT-PRC-007, *Ultrasonic Examination Procedure.*

4.5 FORCE Institutes, P-scan System 4 Instruction Manual

5.0 PERSONNEL REQUIREMENTS

5.1 Personnel Qualifications

Personnel performing or supervising data acquisition or performing data analysis to the requirements of this procedure shall be qualified and certified to at least level II in ultrasonics in accordance with reference 4.2 or equivalent. In addition, they shall be trained in techniques for sizing stress corrosion cracking/planar flaws.

5.2 Certification Level

Personnel performing review for final acceptance of examination data shall be certified to at least level II in ultrasonics in accordance with reference 4.2 or equivalent.

5.3 Support Personnel

Personnel, whose responsibilities are limited to set-up, tear down, and track or scanner operation need not be certified. Such personnel shall possess sufficient knowledge of the equipment to satisfy the Level III examiner.

6.0 EQUIPMENT

6.1 Ultrasonic Instrument/Examination System

The P-scan computerized pulse-echo ultrasonic inspection system shall be used. The system shall be equipped with a stepped gain control in units of 1dB with a dynamic range of at least 115 dB, capable of generating and receiving frequencies in the range of 0.5 to 15 MHz. The following components may be used:

PS-4	P-scan processor
Analysis computer	Off-line data analysis with P-scan analysis software
Digital Controller, WSC-2S, or other approved scan controller	Automatic scanner controller
AWS-5, AWS5-D, RUTI*	Automatic P-scan scanner
Pump	Couplant pump for P-scan system

*Remote Ultrasonic Test Instrument (RUTI) system

6.2 Transducers

Straight-beam and angle-beam transducers with single or dual elements, with or without delay tips, may be used, provided they can be attached to and manipulated by the scanner, and can be adequately coupled to the test item with a resultant backwall signal response of at least a 2 to 1 signal-to-noise ratio. Sizes and frequencies shall be as specified for the following applications:

6.2.1 For high sensitivity applications such as the detection of pitting, erosion or corrosion, transducer sizes in the range of 1/4 inch to 1/2 inch, with a frequency in the range of 4.0 to 10 MHz, shall be used.

6.2.2 For weld inspection, detection and sizing of planar flaws that are open to the surface, angle beam transducers with a nominal angle of 45°, with an element size in the range of 1/4 inch to 1/2 inch, and with a frequency in the range of 4.0 to 10 MHz, shall be used. Where interference from weld geometry prevents examination of the required volume with a 45° transducer, a 60° angle may be substituted.

6.2.3 Transducers of other angles, element sizes, modes of propagation, or frequencies outside the above ranges may be used to suit other required examination techniques.

6.3 Cables

6.3.1 Cables of any compatible type and number of connectors may be used for examination. The length shall be limited to 400 feet, or less where signal degradation occurs. The same cables shall be used for calibration and examination.

6.3.2 The scanner control cable for analog scanners shall be limited to 330 feet maximum. Digitally controlled scanners shall have a maximum cable length as stipulated by the manufacture's recommendation.

6.4 Couplant

6.4.1 Site approved water should be used as couplant for the examination.

6.4.2 Couplant application should be accomplished by means of an automatic couplant delivery system whenever possible. Care should be taken to use only as much water as required, as excess water in the annulus is undesirable.

6.5 User Calibration Blocks

6.5.1 For general thickness measurements, or the detection of pitting, erosion, or corrosion, user calibration blocks shall be made of an acoustically similar material as that being measured. A standard step block with 0.1 inch or greater increments encompassing the nominal thickness to be measured shall be used.

6.5.2 For weld inspection, crack detection and sizing measurements, user calibration blocks shall be made of an acoustically similar material as that being measured. A standard notched block with 0.1 inch or greater increments encompassing the nominal thickness to be measured shall be used.

6.6 Reference Blocks

Reference blocks (e.g., Rompas, IIW, DSC) utilized for beam angle exit point determination or screen width calibration shall be of similar material composition as the component under examination.

6.7 Pulse Repetition Rate

The repetition rates are set at rates such that signal wrap-around does not occur. In addition, the rates are sufficient to pulse the transducer at least six times within the time necessary to move one-half the transducer dimension parallel to the scan direction at maximum scanning speed.

7.0 CALIBRATION

7.1 Verification of Instrument Linearity

Instrument alignment verification for screen height and amplitude control should be performed within three (3) months prior to use of the instrument or at the beginning and end of each outage period, whichever is less. Instrument linearity verification is independent of transducer or scanner characteristics. Verification with one transducer/scanner combination is valid for any other combination. The due date for alignment verification shall be recorded on the calibration sheet.

7.2 System Parameters

The system parameters used for calibration and examination should be established as outlined in Reference 4.5 as required. The system should be operated in the T-SCAN program for thickness mapping and zero degree inspection and in the P-SCAN program for crack detection, weld inspection and/or additional evaluation.

7.3 General Requirements

7.3.1 Calibration shall include the complete ultrasonic examination system. Any change in transducers, wedges, couplants, cables, instruments, recording devices, scanners, power source, personnel, or any other parts of the examination system shall be cause for system calibration check.

7.3.2 If a secondary ultrasonic system is to be used, it must be calibrated before the inspection is started and not removed from the examination system during the inspection or recalibration will be required.

7.3.3 System calibration checks and final calibration for instrument sensitivity and sweep range shall be performed on the same block used for initial calibration using at least one reflector. These checks shall be performed:

a) At the start and finish of each series of examinations.
b) At intervals not to exceed 16 hours.
c) When there is a change as described in 7.3.1.
d) If the examiner suspects a malfunction.

7.3.4 If the horizontal sweep, thickness, or "Z" positions have changed more than **5 %** of the nominal thickness, void all examinations performed after the last valid calibration verification, and reexamine the voided areas.

7.3.5 Calibration checks may be performed on either a reference block or the basic calibration block, but must include a check of the entire examination

system. Calibration checks may be accomplished by static or dynamic calibration.

7.3.6 Simulated calibration checks may be used in lieu of calibration checks where the spread of contamination or serious time constraints would result from performing a standard calibration check. Simulated calibration will use blocks, cables, or transducers of similar types and lengths as those used for testing and will be documented on the calibration data sheet. A baseline, simulated calibration shall be performed immediately after performing the initial calibration, or after a calibration check where the entire examination system is utilized. The initial simulated calibration check values are independent of the values obtained utilizing the entire examination system. The established tolerance applies to the subsequent simulated calibration checks.

7.3.7 During calibration, the temperature of the calibration block should be within 25 degrees Fahrenheit of the ambient inspection temperature.

7.4 Calibration Process for Thickness Mapping / T-scan

The basic process for calibration is the same for thickness mapping (T-scan), weld inspection, flaw detection, and sizing. The calibration reflectors for straight beam are the backwall reflections from a step wedge. The reflectors for angle beam transducers are the notch base and tips from a notched block. The calibration process is as follows:

7.4.1 Select and connect the appropriate transducer(s), input the parameters, including thickness, frequency, index delay, gates, inspection method(s), and velocity. Apply the couplant to the applicable points on the calibration standard. (Select a sufficiently thin step for detection of unexpected low reading or pits and a step greater than the maximum thickness expected.)

7.4.2 Place the transducer(s) on the 1.00" calibration step and adjust the gain control to produce a reflection of 80% full screen height (FSH). Input this gain level as the reference level. Obtain a response from the 0.300" calibration step, and verify that it produces an acceptable signal. Other thickness ranges may be used for system calibration. Initial calibration accuracy will be within +/- 0.010" in T-scan. Record reading on the Automated Ultrasonic Thickness Calibration Sheet (Attachment 1).

7.4.3 The vital parameters used for the calibration shall be identical to the inspection parameters with the exceptions of file name(s), X, Y and Z ranges, reference level compensations, thickness, gates or comment parameters which may be adjusted as required.

7.5 Calibration Process for Weld Inspection / Crack Detection / P-scan

7.5.1 Select and connect the appropriate transducer(s), input the parameters, including thickness, frequency, index delay, gates, inspection method(s), and velocity. Apply the couplant to the applicable points on the calibration standard. The 5%T notch on a 1" thick plate should be used to obtain the reference level.

7.5.2 Manipulate the transducer to receive the maximum response from the reference notch. Adjust the gain control to produce a reflection of 80% full screen height (FSH). Input this value as the reference level. Obtain a response from the calibration reflector and verify that the response is within +/- 2dB.

7.5.3 Repeat step 7.5.2 as required for each transducer until the system is calibrated.

7.5.4 The vital parameters used for the calibration shall be identical to the inspection parameters with the exceptions of file name(s), X, Y and Z ranges, reference level compensations, thickness, gates or comment parameters which may be adjusted as required.

7.6 Sizing Calibration for Tip Diffraction Techniques (AATT, RATT)

a) Select an appropriate transducer.

b) Select a sizing calibration block of similar thickness and material containing at least two notches of known depths.

c) For the AATT technique, set at least two gates, to cover the entire area of interest. The first gate in the first leg, ending just before the ID. Position the transducer on the calibration block. Alternately peak the shallow and deep signals from the notch tips (see Figure 1, Attachment 2). Using the index delay and velocity controls, adjust the system until the system correctly reads the remaining ligament with the "Z" cursor.

d) For the RATT technique, the system mode should be set to A-SCAN. Manipulate the transducer until signals are obtained from the shallow notch tip and the notch base simultaneously (see Figure 2, Attachment 2). Using the index delay and velocity, adjust the distance between the two signals to read the actual reflector depth in inches. Repeat the same process on the deep notch. Alternate this procedure until the screen/system represents a desirable linear depth screen in inches.

c) Save the calibration, and record this data on the Automated Ultrasonic P-Scan Calibration Sheet (Attachment 3).

8.0 EXAMINATION

8.1 Surface Condition

8.1.1 The surface from which measurements are to be taken should be free of loose scale, unbonded coating, heavy oxidation, weld spatter, or other material which may interfere with movement of the transducer or the transmission of sound into the material.

8.1.2 A surface finish of 250 RMS or better should be provided. The requesting organization must approve the use of any base material preparation process, which may reduce the thickness below the allowable tolerance.

8.2 Extent of Examination

The location of the areas to be measured and/or the number of scans to be performed shall be designated by the applicable work instructions. The location, scan numbers, and reference points of all scans shall be recorded on the applicable data sheets. See Attachment 4 for minimum examination volume and beam direction for weld inspection.

NOTE: Additional scan areas will not require revision to this procedure.

8.3 Flaw Location

When performing examinations to detect planar flaws, angle beam transducers shall be used. Calibration is performed as in Section 7.5. All angle beam examinations shall be performed in P-scan.

8.4 Ultrasonic Measurement

User calibration shall have been completed per the applicable requirements of Section 7.0 prior to performing any of the examinations.

8.4.1 Transducer overlap between passes shall be a minimum of **50%** of the element size. Scanning speed shall not exceed **6 inches** per second.

8.4.2 Should measurements be observed larger or smaller than the calibration range, check the calibration for accuracy in the encountered thickness range. If the calibration is accurate in this range, amend the calibration sheet and continue the examination. If the calibration is not within the

tolerance allowed in the spec, then recalibrate and rescan all areas where readings were encountered outside the originally calibrated range.

8.5 Limitations and Precautions

8.5.1 Care must be taken to ensure the transducer face is flush with the examination surface during scanning.

8.5.2 When it is necessary to determine the origin of mid-wall indications, a 4MHz shear wave transducer(s) may be used in the P-Scan program to detect pit openings or perpendicular connections between laminar indications.

8.6 Recording

Upon completion of each scan area, the data file(s) shall be recorded on a disk. All measurements within the predetermined gated area are stored, along with the text information with each file.

8.7 General Sizing Guidelines

8.7.1 It is recognized that, of the methods of sizing described in this procedure, no one technique is completely accurate in sizing all flaws in all thicknesses. By using complementary methods, however, a realistic approximation of the flaw depth can be obtained.

8.7.2 The method of sizing pits is primarily utilizing a 0° dual element transducer. The 45° shear wave transducers may be used to confirm qualitatively the depth of the pit.

8.7.3 When sizing crack-like indications, the entire flawed area shall be scanned with the imaging mode. The entire flaw length shall be evaluated. It is recommended that A-Scans be recorded at the deepest location of the flaw. The primary technique for sizing crack-like indications is the high frequency, 45° shear wave transducer utilizing the Absolute Arrival Time Technique (AATT). The dual element, straight beam may be used as a complimentary technique.

8.7.4 Additional sizing technique sequences may be utilized if the primary techniques identified prove to be indeterminable.

8.8 Sizing with Tip Diffraction Techniques (AATT, RATT)

8.8.1 The AATT technique uses shear waves to obtain a diffracted echo (satellite pulse) from the flaw tip (see Figure 1, Attachment 2). The RATT technique uses shear wave reflected signals from both the flaw tip and the flaw base (see Figure 2, Attachment 2). Both techniques can be utilized using the same transducer.

a) AATT Technique

Locate the deepest extremity of the flaw and maximize the signal from the flaw tip. The distance to the flaw tip represents the remaining material ligament from the outside surface. To determine the relative through wall flaw depth, subtract this dimension from the local material wall thickness.

b) RATT Technique

Locate the deepest extremity of the flaw, and obtain a signal from the flaw base. Manipulate the transducer until the doublet (flaw base and tip signal appearing simultaneously) is observed. These signals do not have to be peaked, as the doublet separation directly indicates the relative through wall depth. To determine remaining material ligament, subtract the relative through wall depth measurement from the local material wall thickness.

8.8.2 Other sizing techniques or variations to the techniques may be used with the approval of the UT Level Ill. Such approval, signature and a description of the technique shall be recorded in the "Remarks" column on the Automated Ultrasonic P-Scan Calibration Sheet (Attachment 3).

9.0 EVALUATION

9.1 Relevant Indications

Relevant Indications, including pitting, thinning and crack-like indications, along with the minimum thickness reading in the area of interest, shall be recorded and used for evaluation per Paragraph 9.2.

9.1.1 P-scan data shall be evaluated to a sensitivity of 20% reference level (-14dB). All crack-like indications are recordable regardless of amplitude.

9.1.2 T-scan data shall be evaluated utilizing all available images to detect and evaluate indications.

9.1.3 Reportable indications shall be evaluated by Level III personnel prior to final report submittal.

9.2 Reporting/Special Criteria

Reporting and special notification criteria are noted in Section 9.8.

9.3 Statistical Information

The statistical information (Minimum and Mean thickness) provided under "Setup" pages 1 & 2 of the post-processing software should be reported for each "Part" of a given scan location. Where data noise invalidates these values, the analyst should determine the values using the level control.

9.4 Printouts

Printouts should be made in accordance with the customer's request. In absence of further direction, both the merged set-up pages and the merged image, adjusted to show the minimum thickness, shall be printed at a level that best shows the wear patterns or at Nominal T - **10.0%**, whichever provides the most useful information. P-scan data should be printed with the level control set at 20% reference level **(-14dB)**.

9.5 Recording Crack Size

9.5.1 All flaw sizing data acquired should be used to determine the flaw depth. This data shall be reported individually for each flaw and shall include all data necessary to achieve the best accuracy of flaw depth.

9.5.2 If, during sizing, a <u>flaw length other than that reported during the detection examination</u> is measured, or other discrepant conditions occur, record the corrected lengths, locations. or distances on the Automated Ultrasonic P-scan Data Report (Attachment 5) in the spaces provided.

9.5.3 If, during sizing, the area is determined <u>not to be flawed</u>, and the resultant reflector(s) is due to component/weld geometry or metallurgical structure, the true origin (e.g., root, mismatch, etc.) shall be documented and substantiated on the Ultrasonic P-scan Data Report.

9.6 Scanning Limitations

Record all limitations due to weld configurations, obstructions, single side access restrictions, etc., in the remarks section on the applicable Ultrasonic Data Report. Details as to specific length or area in relation to L (X) and/or W (Y) reference points should be recorded.

9.7 Flaw Evaluation

Reportable indications shall be evaluated by Level III personnel prior to final report submittal.

9.8 Reporting Levels

All indications which meet or exceed the following conditions shall be reported to the project cognizant engineer.

a) Pit depth exceeds 25% of the wall thickness.

b) Wall thinning exceeds 10% of the wall thickness.

c) Surface crack depths exceeding 0.100 inches.

10.0 REPORTS

10.1 Thickness Data Reports

An Automated Ultrasonic Thickness Data Report (Attachment 6) shall be prepared for each examination or series of examinations performed. This report shall include identity of equipment, the thickness measurements obtained, and should be referenced to the calibration sheet.

10.2 Calibration Reports

An Automated Ultrasonic Thickness Calibration Sheet (Attachment 1), and an Automated Ultrasonic P-Scan Calibration Sheet (Attachment 3) shall be prepared for each examination or series of examinations performed. These reports shall include the materials and equipment used for examination.

10.3 Sketch Sheets

Automated Ultrasonic Examination Sketch Sheet(s) (Attachments 7 and/or 8) should be prepared for each examination or series of examinations performed. These reports should include a sketch of the component or item examined, identifying scan locations, including dimensions, reference points, and grid locations, where applicable.

10.4 Sizing Data Reports

An Automated Ultrasonic P-Scan Data Report (Attachment 5) shall be completed only when cracking is detected. Each report shall be related to the applicable Automated Ultrasonic Examination Calibration Sheet(s).

10.5 Final Reports

Final reports are to be distributed and maintained in accordance with the applicable contract.

11.0 ATTACHMENTS

Attachment 1: Sample Automated Ultrasonic Thickness Calibration Sheet

Attachment 2: Figure 1: Absolute Arrival Time Technique (AATT)
Figure 2: Relative Arrival Time Technique (RATT)

Attachment 3: Sample Automated Ultrasonic P-scan Calibration Sheet

Attachment 4: Examination Volume, Minimum Beam Directions and Extent of Examination

Attachment 5: Sample Automated Ultrasonic P-scan Data Report

Attachment 6: Sample Automated Ultrasonic Thickness Data Report

Attachment 7: Automated Ultrasonic Examination Sketch Sheet – Tank Walls and Knuckles

Attachment 8: Automated Ultrasonic Examination Sketch Sheet – Tank Bottom

COGEMA ENGINEERING

AUTOMATED ULTRASONIC EXAMINATION FOR CORROSION AND CRACKING

Attachment 1: Sample Automated Ultrasonic Thickness Calibration Sheet

AUTOMATED ULTRASONIC THICKNESS CALIBRATION SHEET		Job #	Riser #
Location:	System:	Calibration Block:	
Procedure:	Rev.	Thickness:	Material:
UT System:	Serial No.	Reference Block:	
Software Version:	Rev.	Thickness:	Material:
Linearity Due Date:		Reference Block Temp:	°F
Scanner Type:	Serial No.	Couplant:	Batch No.
Scanner Cable:		Cable Length:	Feet
Signal Cable:		Cable Length:	Feet

Channel	Transducer Make	Model	Freq. (MHz)	Size	Serial No.	Angle (deg)	Wedge Type
1							
2							
3							
4							

INITIAL CALIBRATION			CALIBRATION CHECKS						
DATE:									
TIME:									
REFLECTOR:									
CH. 1	THK. 1								
	THK. 2								
CH. 2	THK. 1								
	THK. 2								
CH. 3	THK. 1								
	THK. 2								
CH. 4	THK. 1								
	THK. 2								
EXAMINER:									

Remarks:

Examiner:	Examiner:	Reviewer:
Level: ____ Date: _____	Level: ____ Date: _____	Level: ____ Date: _____

Rev. Dec. 03, 2003

Attachment 2: Absolute Arrival Time Technique (AATT) &
Relative Arrival Time Technique (RATT)

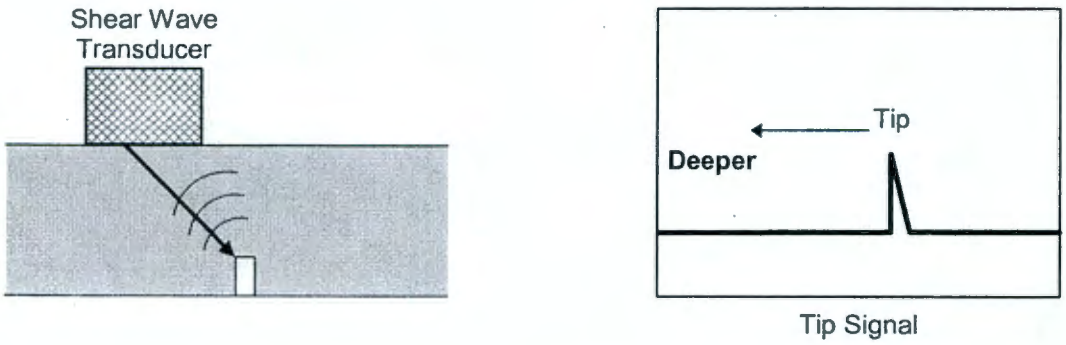

Figure 1. Absolute Arrival Time Technique

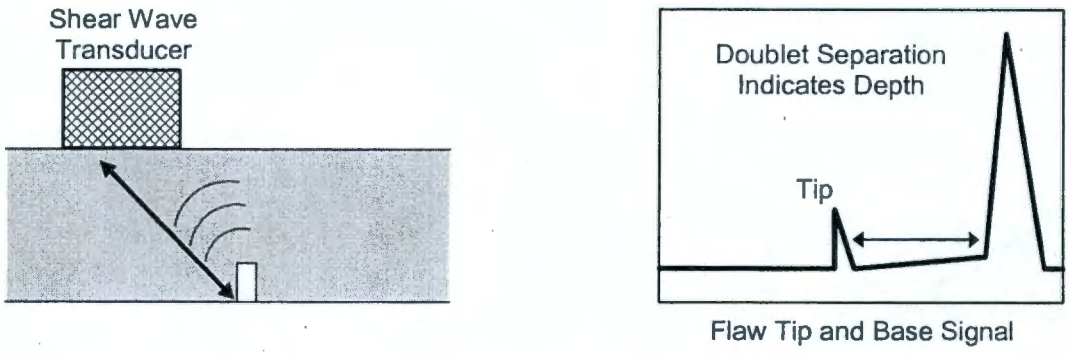

Figure 2. Relative Arrival Time Technique

COGEMA ENGINEERING

AUTOMATED ULTRASONIC EXAMINATION FOR CORROSION AND CRACKING

Attachment 3: Sample Automated Ultrasonic P-scan Calibration Sheet

AUTOMATED ULTRASONIC P-SCAN CALIBRATION SHEET			Job #	Riser #
Location:	System:		Calibration Block:	
Procedure:		Rev.	Thickness:	Material:
UT System:	Serial No.		Reference Block:	
Software Version:		Rev.	Thickness:	Material:
Linearity Due Date:			Reference Block Temp:	°F
Scanner Type:	Serial No.		Couplant:	Batch No.
Scanner Cable:			Cable Length:	Feet
Signal Cable:			Cable Length:	Feet

Channel	Transducer Make	Model	Freq. (MHz)	Size	Serial No.	Angle (deg) Nom. / Act.	Wedge Type
1							
2							
3							
4							

INITIAL CALIBRATION			CALIBRATION CHECKS						
DATE:									
TIME:									
REFLECTOR / ORIENTATION:									
CH. 1	AMPLITUDE								
	LOCATION								
CH. 2	AMPLITUDE								
	LOCATION								
CH. 3	AMPLITUDE								
	LOCATION								
CH. 4	AMPLITUDE								
	LOCATION								
EXAMINER:									

Remarks:

Examiner:	Examiner:	Reviewer:
Level: ____ Date: _____	Level: ____ Date: _____	Level: ____ Date: _____

Rev. Dec. 03, 2003

Attachment 4: Examination Volume, Minimum Beam Directions and Extent of Examination

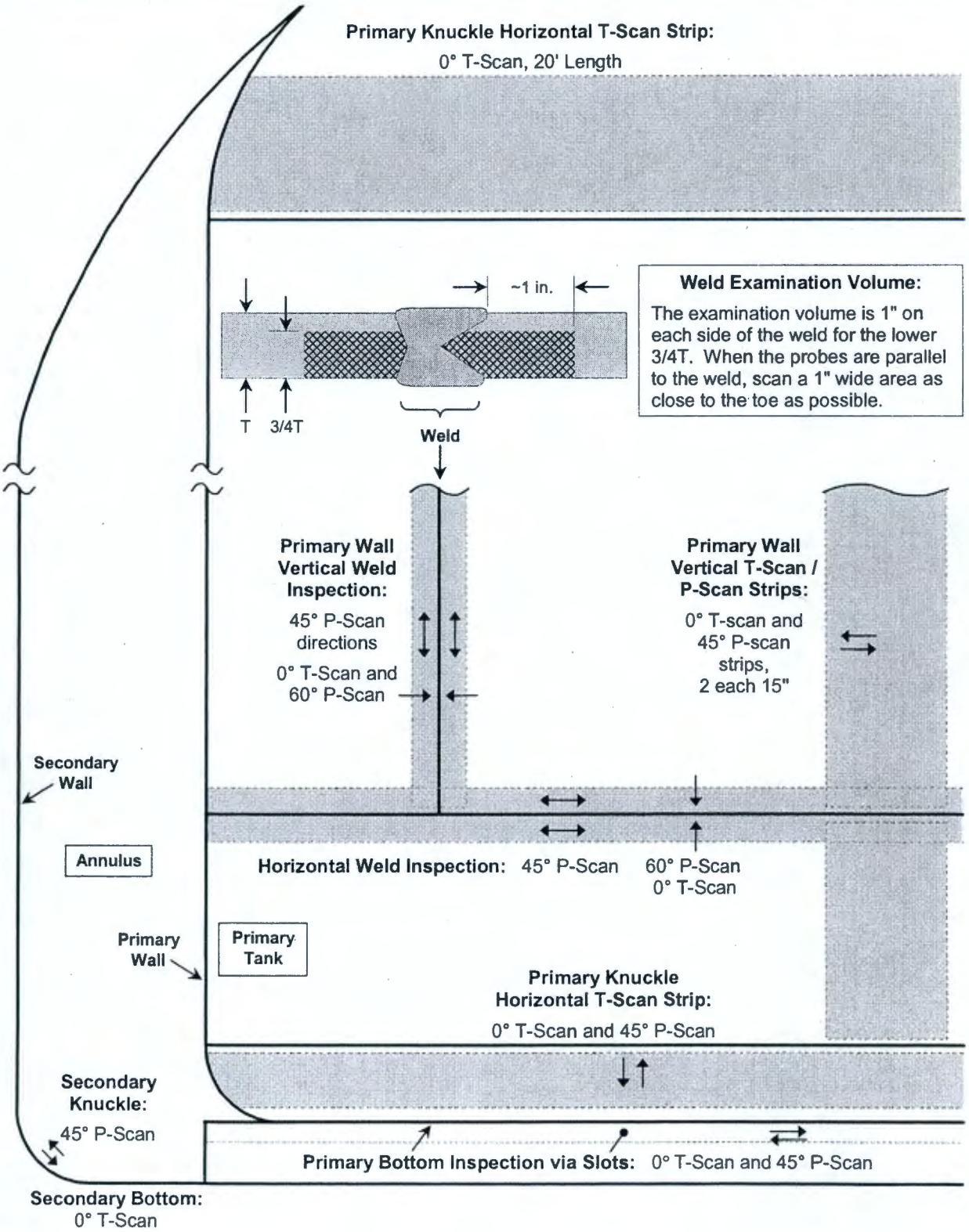

Attachment 4 (continued): Extent of Examination

Primary Tank Wall

Vertical Strips - Examine a vertical strip 30" x 35 feet long of the primary wall between the upper haunch transition and the lower knuckle for pits, cracks and wall thinning. Axial cracks on the tank inner wall surface shall be detected and sized. The vertical strip may be comprised of one or more strips whose total width is equal to 30 inches.

Weld Areas - Examine 20 feet of horizontal weld area (heat affected zone), at tank to knuckle weld. Examine one ~10 foot section of vertical weld joining the lowest shell course plates and one ~10 foot section of vertical weld joining the next to lowest shell course plates. Axial and circumferential cracks on the tank inner surface shall be detected and sized.

Primary Tank Knuckles

Examine 20 feet of the primary tank lower knuckle in the circumferential direction to detect and size cracking in the circumferential direction and to detect pits and wall thinning. Examine 20 feet of the primary tank upper knuckle in the circumferential direction to detect pits and wall thinning. The areas to be examined are from the welds joining the transition plates with the knuckles to the furthest reach of the transducer assembly that is allowed by geometric constraints.

Secondary Tank

Secondary Tank Lower Knuckle – Examine a 20 foot length of the secondary tank knuckle over the entire area of the knuckle for the presence of circumferential cracks.

Secondary Tank Bottom – Examine the secondary tank bottom over an area of 10 ft^2 to detect and measure thickness and pits.

Primary Tank Bottom

Examine the primary tank bottom for pits, wall thinning and cracks oriented in the circumferential direction (perpendicular to the air channels) in 16 air channels. The tank bottom is to be examined for a distance of 12 feet towards the tank center, starting seven inches inboard of the outside radius of the tank cylindrical section. The primary tank bottom scan head is designed to examine the accessible area in the air channel in one pass through the channel.

COGEMA ENGINEERING

AUTOMATED ULTRASONIC EXAMINATION FOR CORROSION AND CRACKING

Attachment 5: Sample Automated Ultrasonic P-scan Data Report

AUTOMATED ULTRASONIC P-SCAN DATA REPORT		Job #	Riser #
Location:	System:	Exam Start:	Exam End:
Component ID:		Examination Surface: ☐ OD ☐ ID ☐ PAINTED	Nominal Thickness:
Configuration: TO		Calibrated Range: TO	Temp: °F
Total Length Examined:	Scan Width:	Ref. Level Correction (Trans. Corr): ____ DB	
Procedure:	Rev.	Material Type: ☐ SS ☐ CS OTHER: _____	Condition:
File Name / Item #:		Transducer: ☐ DUAL ☐ SGL ☐ 0 DEG ☐ ANGLE: ____ °	
X_O Ref. Point (L_O):			
Y_O Ref. Point (W_O):			

	Sizing Method	Angle (deg)	Reference Cal. Sheet	Set-Up / File Name
1	45° SHEAR			
2	60° SHEAR			
3	AATT			
4	DUAL 0°			

INDICATION INFORMATION

Ind.	Method	Weld Side	Depth R. Lig.	Max. Amp.	L1 (in)	Length (in)	L2 (in)	W1 (in)	Width (in)	W2 (in)	Indication Type

Remarks:

Examiner:	Examiner:	Analyst:	Reviewer:
_____	_____	_____	_____
Level: ____	Date: _____	Level: ____	Level: ____

Rev. Dec. 03, 2003

COGEMA ENGINEERING

AUTOMATED ULTRASONIC EXAMINATION FOR CORROSION AND CRACKING

Attachment 6: Sample Automated Ultrasonic Thickness Data Report

AUTOMATED ULTRASONIC THICKNESS DATA REPORT		Job #	Riser #
Location:		Exam Start:	Exam End:
Component ID:		Examination Surface: ☐ OD ☐ ID ☐ PAINTED	Nominal Thickness:
Configuration: TO		Calibrated Range: TO	Temp: °F
Total Length Examined:	Scan Width:	Ref. Level Correction (Trans. Corr.): _____ DB	
Procedure:	Rev	Material Type: ☐ SS ☐ CS OTHER: _____	Condition:
File Name:		Transducer: ☐ DUAL ☐ SGL ☒ 0 DEG ☐ ANGLE: ____ °	
X_O Ref. Point (L_O):			
Y_O Ref. Point (W_O):			

Part # / Indication	X Start (in)	X Stop (in)	Y Start (in)	Y Stop (in)	Ave. Thk. (in)	Min. Thk., R. Lig. (in)	Area Reportable	Max. Thk. (in)

Remarks:

Examiner:	Examiner:	Analyst:	Reviewer:
_____	_____	_____	_____
Level: ____	Date: _____	Level: ____	Level: ____

Rev. Dec. 03, 2003

Attachment 7: Automated Ultrasonic Examination Sketch Sheet – Tank Walls and Knuckles

Tank 241-____

Riser ___

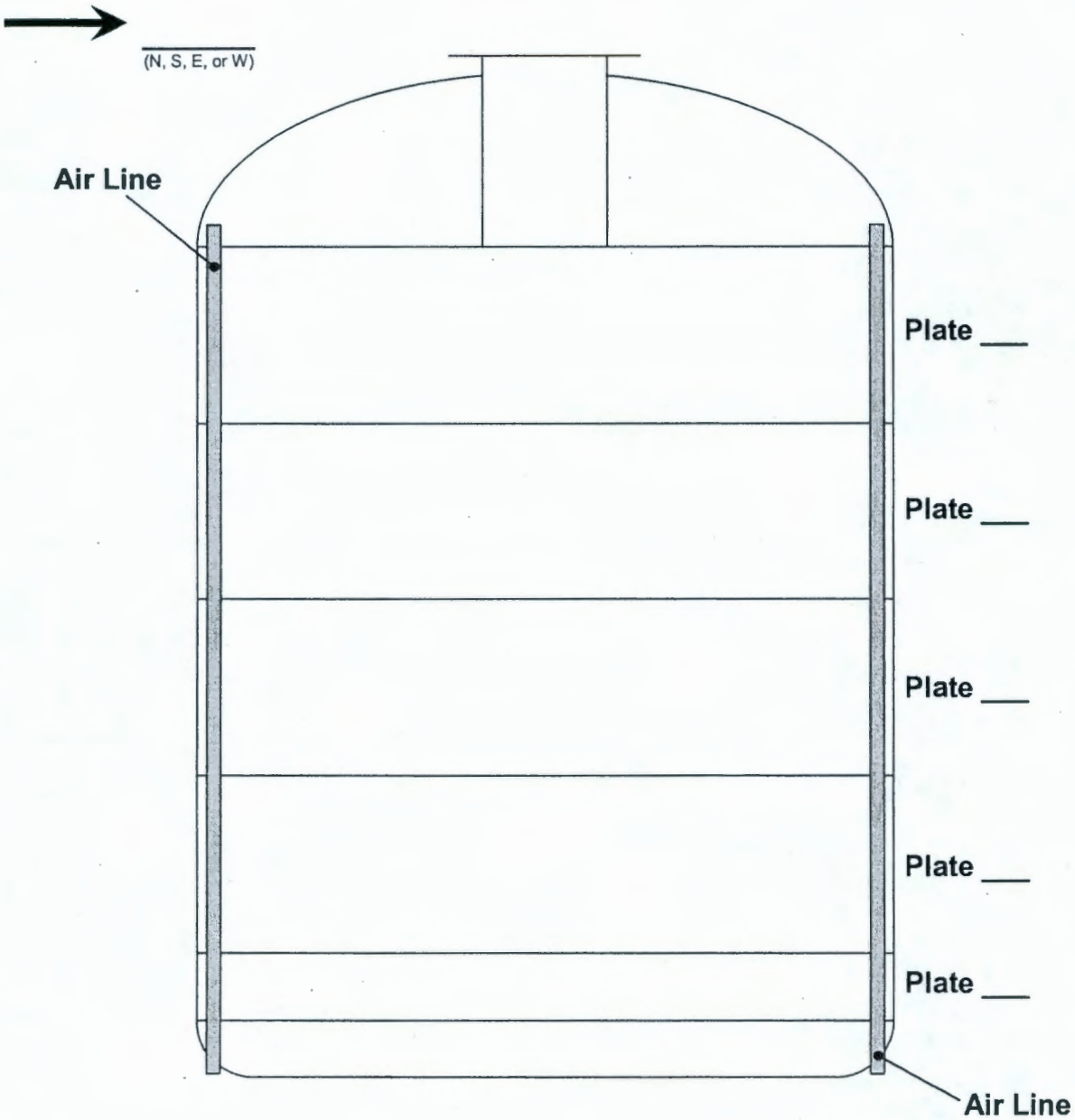

Attachment 8: Automated Ultrasonic Examination Sketch Sheet – Tank Bottom

Tank 241-_____

Typical Air Channels Under Tank Bottom

Note: Flow Path Geometry and Number of Channels Differ from Tank to Tank

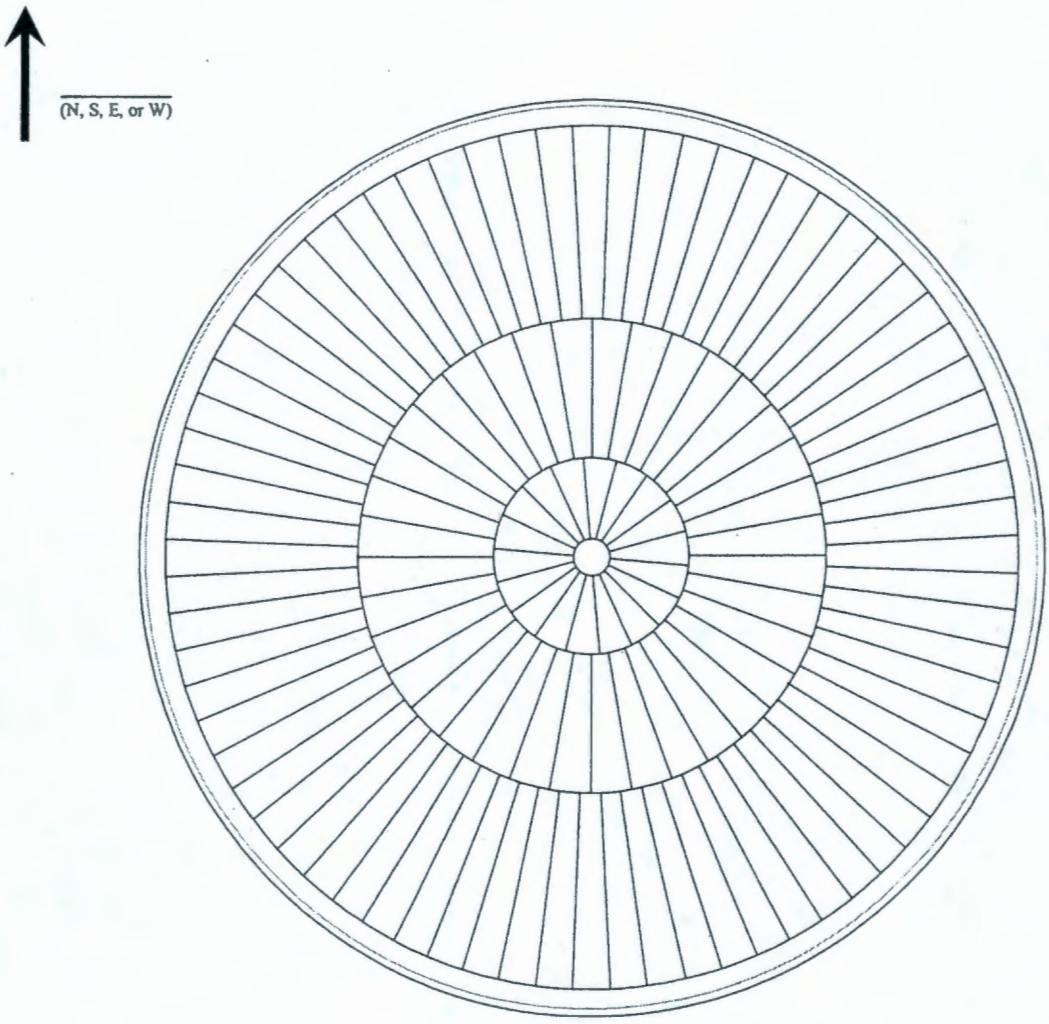

This page intentionally left blank.

ATTACHMENT 2

COGEMA "AUTOMATED ULTRASONIC THICKNESS DATA REPORT SHEETS"

This page intentionally left blank.

ATTACHMENT 2

COGEMA "AUTOMATED ULTRASONIC THICKNESS DATA REPORT SHEETS"

AUTOMATED ULTRASONIC THICKNESS DATA REPORT		Job # 04-41	Riser # 30
Location: 200 EAST TANK FARM		Exam Start: 10/18/04 0911	Exam End: 1743
Component ID: 106-AP		Examination Surface: ☒ OD ☐ ID ☐ PAINTED	Nominal Thickness: .500"
Configuration: PLATE TO		Calibrated Range: 0.3" TO 1.0"	Temp: AMB °F
Total Length Examined: 90.3"	Scan Width: 15"	Ref. Level Correction (Trans. Corr.): 0 DB	
Procedure: COGEMA SVUT-INS-007.3	Rev 2	Material Type: ☐ SS ☒ CS OTHER:	Condition: N/A
File Name: VERT.WALL/PLATE1		Transducer: ☒ DUAL ☐ SGL ☒ 0 DEG ☐ ANGLE: °	
X_O Ref. Point (L_O): 1" above bottom horiz.			
Y_O Ref. Point (W_O): 19" from center line of 2nd pass, south of 2nd pass			

Part # / Indication	X Start (in)	X Stop (in)	Y Start (in)	Y Stop (in)	Ave. Thk. (in)	Min. Thk., R. Lig. (in)	Area Reportable	Max. Thk. (in)
0-12					.520"	.511"		.530"
12-24					.525"	.518"		.530"
24-36					.525"	.519"		.530"
36-48					.525"	.504"		.530"
48-60					.525"	.505"		.530"
60-72					.525"	.518"		.530"
72-84					.520"	.499"		.530"
84-90.3					.515"	.455"		.530"

Remarks:

Scan started at the bottom horizontal weld and scanned up to top horizontal weld.

[N1] See Attached Letter From J. B. Elder

Examiner: W. H. Nelson	Examiner:	Analyst: W. H. Nelson	Reviewer: J. B. Elder
Level: III Date: 10/18/04	Date:	Level: III Date: 10/26/04	[N1] Level: III Date:

COGEMA-SVUT-INS-007.3, Rev. 2, Attachment 6 *Rev. Dec. 03, 2003*

AUTOMATED ULTRASONIC P-SCAN DATA REPORT		Job # 04-41	Riser # 30
Location: 200 EAST TANK FARM	System: PSP-4	Exam Start: 10/18/04 0916	Exam End: 1750
Component ID: 106-AP		Examination Surface: ☒ OD ☐ ID ☐ PAINTED	Nominal Thickness: 0.5000"
Configuration: PLATE TO		Calibrated Range: 0" TO 1.414"	Temp: AMB °F
Total Length Examined: 90.2"	Scan Width: 15"	Ref. Level Correction (Trans. Corr): 0 DB	
Procedure: COGEMA SVUT-INS-007.3	Rev. 2	Material Type: ☐ SS ☒ CS OTHER:	Condition: N/A
File Name / Item #: VERT.WALL/PLATE1		Transducer: ☐ DUAL ☒ SGL ☐ 0 DEG ☒ ANGLE: 45°	
X_O Ref. Point (L_O): 1" above bottom horiz. weld			
Y_O Ref. Point (W_O): 19" from center line of 2nd pass, south of 2nd pass			

	Sizing Method	Angle (deg)	Reference Cal. Sheet	Set-Up / File Name
1	45° SHEAR			
2	60° SHEAR			
3	AATT			
4	DUAL 0°			

INDICATION INFORMATION

Ind.	Method	Weld Side	Depth R. Lig.	Max. Amp.	L1 (in)	Length (in)	L2 (in)	W1 (in)	Width (in)	W2 (in)	Indication Type

Remarks:

Scan started at the bottom horizontal weld and scanned up to the top horizontal weld.
No crack like indications

[N1] See Attached Letter From J. B. Elder

Examiner: W. H. Nelson	Examiner:	Analyst: W. H. Nelson	Reviewer: J. B. Elder
Level: III Date: 10/18/04	Date:	Level: III Date: 10/26/04	[N1] Level: III Date:

COGEMA-SVUT-INS-007.3, Rev. 2, Attachment 5 — Rev. Dec. 03, 2003

AUTOMATED ULTRASONIC THICKNESS DATA REPORT	Job # 04-41	Riser # 30

Location: 200 EAST TANK FARM	Exam Start: 10/21/04 0909	Exam End: 2005
Component ID: 106-AP	Examination Surface: ☒ OD ☐ ID ☐ PAINTED	Nominal Thickness: .500"
Configuration: PLATE TO	Calibrated Range: 0.3" TO 1.0"	Temp: AMB °F
Total Length Examined: 87.4" / Scan Width: 15"	Ref. Level Correction (Trans. Corr.): 0 DB	
Procedure: COGEMA SVUT-INS-007.3 / Rev 2	Material Type: ☐ SS ☒ CS OTHER:	Condition: N/A
File Name: VERT.WALL/PLATE2	Transducer: ☒ DUAL ☐ SGL ☒ 0 DEG ☐ ANGLE: °	
X_o Ref. Point (L_o): 1" below horiz. weld		
Y_o Ref. Point (W_o): center line of 24" riser		

Part # / Indication	X Start (in)	X Stop (in)	Y Start (in)	Y Stop (in)	Ave. Thk. (in)	Min. Thk., R. Lig. (in)	Area Reportable	Max. Thk. (in)
0-12					.518"	.510"		.525"
12-24					.520"	.518"		.525"
24-36					.520"	.518"		.525"
36-48					.520"	.518"		.525"
48-60					.523"	.519"		.530"
60-72					.522"	.498"		.530"
72-84					.520"	.502"		.525"
84-87.4					.518"	.499"		.520"

Remarks:

[N1] See Attached Letter From J. B. Elder

Examiner: W. H. Nelson	Examiner:	Analyst: W. H. Nelson	Reviewer: J. B. Elder
Level: III Date: 10/21/04	Date:	Level: III Date: 10/27/04	[N1] Level: III Date:

COGEMA-SVUT-INS-007.3, Rev. 2, Attachment 6 — Rev. Dec. 03, 2003

AUTOMATED ULTRASONIC P-SCAN DATA REPORT		Job # 04-41	Riser # 30
Location: 200 EAST TANK FARM	System: PSP-4	Exam Start: 10/25/04 0900	Exam End: 1424
Component ID: 106-AP		Examination Surface: ☒ OD ☐ ID ☐ PAINTED	Nominal Thickness: 0.5000"
Configuration: PLATE TO		Calibrated Range: 0" TO 1.414"	Temp: AMB °F
Total Length Examined: 88.8"	Scan Width: 15"	Ref. Level Correction (Trans. Corr): 0 DB	
Procedure: COGEMA SVUT-INS-007.3	Rev. 2	Material Type: ☐ SS ☒ CS OTHER:	Condition: N/A
File Name / Item #: VERT.WALL/PLATE2		Transducer: ☐ DUAL ☒ SGL ☐ 0 DEG ☒ ANGLE: 45°	
X_O Ref. Point (L_O): 1" below horiz. weld			
Y_O Ref. Point (W_O): center line of 24" riser			

	Sizing Method	Angle (deg)	Reference Cal. Sheet	Set-Up / File Name
1	45° SHEAR			
2	60° SHEAR			
3	AATT			
4	DUAL 0°			

INDICATION INFORMATION

Ind.	Method	Weld Side	Depth R. Lig.	Max. Amp.	L1 (in)	Length (in)	L2 (in)	W1 (in)	Width (in)	W2 (in)	Indication Type

Remarks:

No crack like indications

[N1] See Attached Letter From J. B. Elder

Examiner: W. H. Nelson	Examiner:	Analyst: W. H. Nelson	Reviewer: J. B. Elder
WHNelson		WHNelson	[N1]
Level: III Date: 10/25/04	Date:	Level: III Date: 10/27/04	Level: III Date:

COGEMA-SVUT-INS-007.3, Rev. 2, Attachment 5 Rev. Dec. 03, 2003

AUTOMATED ULTRASONIC THICKNESS DATA REPORT	Job # 04-41	Riser # 30

Location: 200 EAST TANK FARM	Exam Start: 10/21/04 0909	Exam End: 2005
Component ID: 106-AP	Examination Surface: ☒ OD ☐ ID ☐ PAINTED	Nominal Thickness: .5625"
Configuration: PLATE TO	Calibrated Range: 0.3" TO 1.0"	Temp: AMB °F
Total Length Examined: 88.4" / Scan Width: 15"	Ref. Level Correction (Trans. Corr.): 0 DB	
Procedure: COGEMA SVUT-INS-007.3 / Rev 2	Material Type: ☐ SS ☒ CS OTHER:	Condition: N/A
File Name: VERT.WALL/PLATE3	Transducer: ☒ DUAL ☐ SGL ☒ 0 DEG ☐ ANGLE: °	
X_O Ref. Point (L_O): 1" below horiz. weld		
Y_O Ref. Point (W_O): center line of 24" riser		

Part # / Indication	X Start (in)	X Stop (in)	Y Start (in)	Y Stop (in)	Ave. Thk. (in)	Min. Thk., R. Lig. (in)	Area Reportable	Max. Thk. (in)
0-12					.564"	.559"		.565"
12-24					.565"	.559"		.570"
24-36					.568"	.563"		.570"
36-48					.568"	.555"		.570"
48-60					.568"	.565"		.570"
60-72					.566"	.561"		.570"
72-84					.564"	.560"		.570
84-88.4					.564"	.553"		.570"

Remarks:

[N1] See Attached Letter From J. B. Elder

Examiner: W. H. Nelson	Examiner:	Analyst: W. H. Nelson	Reviewer: J. B. Elder
WH Nelson		WH Nelson	[N1]
Level: III Date: 10/21/04	Date:	Level: III Date: 10/27/04	Level: III Date:

COGEMA-SVUT-INS-007.3, Rev. 2, Attachment 6 — Rev. Dec. 03, 2003

AUTOMATED ULTRASONIC P-SCAN DATA REPORT		Job # 04-41	Riser # 30
Location: 200 EAST TANK FARM	System: PSP-4	Exam Start: 10/21/04 0915	Exam End: 2010
Component ID: 106-AP		Examination Surface: ☒ OD ☐ ID ☐ PAINTED	Nominal Thickness: ~~0.5620"~~ .5625" WDN 12/10/04
Configuration: PLATE TO		Calibrated Range: 0" TO 1.59"	Temp: AMB °F
Total Length Examined: 88.5"	Scan Width: 15"	Ref. Level Correction (Trans. Corr): 0 DB	
Procedure: COGEMA SVUT-INS-007.3	Rev. 2	Material Type: ☐ SS ☒ CS OTHER:	Condition: N/A
File Name / Item #: VERT.WALL/PLATE3		Transducer: ☐ DUAL ☒ SGL ☐ 0 DEG ☒ ANGLE: 45°	
X_o Ref. Point (L_o): 1" below horiz. weld			
Y_o Ref. Point (W_c): center line of 24" riser			

	Sizing Method	Angle (deg)	Reference Cal. Sheet	Set-Up / File Name
1	45° SHEAR			
2	60° SHEAR			
3	AATT			
4	DUAL 0°			

INDICATION INFORMATION

Ind.	Method	Weld Side	Depth R. Lig.	Max. Amp.	L1 (in)	Length (in)	L2 (in)	W1 (in)	Width (in)	W2 (in)	Indication Type

Remarks:
No crack like indications

[N1] See Attached Letter From J. B. Elder

Examiner: W. H. Nelson	Examiner:	Analyst: W. H. Nelson	Reviewer: J. B. Elder
WH Nelson		WH Nelson	[N1]
Level: III Date: 10/21/04	Date:	Level: III Date: 10/27/04	Level: III Date:

COGEMA-SVUT-INS-007.3, Rev. 2, Attachment 5 — Rev. Dec. 03, 2003

AUTOMATED ULTRASONIC THICKNESS DATA REPORT	Job # 04-41	Riser # 30

Location: 200 EAST TANK FARM	Exam Start: 11/01/04 0934	Exam End: 2015
Component ID: 106-AP	Examination Surface: ☒ OD ☐ ID ☐ PAINTED	Nominal Thickness: .750"
Configuration: PLATE TO	Calibrated Range: 0.3" TO 1.0"	Temp: AMB °F
Total Length Examined: 103.4" / Scan Width: 15"	Ref. Level Correction (Trans. Corr.): 0 DB	
Procedure: COGEMA SVUT-INS-007.3 / Rev 2	Material Type: ☐ SS ☒ CS OTHER:	Condition: N/A
File Name: VERT.WALL/PLATE4	Transducer: ☒ DUAL ☐ SGL ☒ 0 DEG ☐ ANGLE: °	
X_o Ref. Point (L_o): 1" below horiz. weld		
Y_o Ref. Point (W_o): center line of 24" riser		

Part # / Indication	X Start (in)	X Stop (in)	Y Start (in)	Y Stop (in)	Ave. Thk. (in)	Min. Thk., R. Lig. (in)	Area Reportable	Max. Thk. (in)
0-12					.769"	.763"		.776"
12-24					.769"	.766" WDN		.776"
24-36					.769"	.766" 12/10/04		.775"
36-48					.769"	.752"		.775"
48-60					.769"	.764"		.775"
60-72					.769"	.765"		.775"
72-84					.772"	.764"		.775"
84-96					.770"	.763"		.775"
96-103.4					.764"	.753"		.775"

Remarks:

[N1] See Attached Letter From J. B. Elder

Examiner: W. H. Nelson	Examiner:	Analyst: W. H. Nelson	Reviewer: J. B. Elder
WH Nelson		WH Nelson	[N1]
Level: III Date: 11/01/04	Date:	Level: III Date: 11/02/04	Level: III Date:

COGEMA-SVUT-INS-007.3, Rev. 2, Attachment 6 — Rev. Dec. 03, 2003

AUTOMATED ULTRASONIC P-SCAN DATA REPORT		Job # 04-41	Riser # 30
Location: 200 EAST TANK FARM	System: PSP-4	Exam Start: 11/01/04 0941	Exam End: 2020
Component ID: 106-AP		Examination Surface: ☒ OD ☐ ID ☐ PAINTED	Nominal Thickness: 0.7500"
Configuration: PLATE TO		Calibrated Range: 0" TO 2.12"	Temp: AMB °F
Total Length Examined: 103.3"	Scan Width: 15"	Ref. Level Correction (Trans. Corr): 0 DB	
Procedure: COGEMA SVUT-INS-007.3	Rev. 2	Material Type: ☐ SS ☒ CS OTHER:	Condition: N/A
File Name / Item #: VERT.WALL/PLATE4		Transducer: ☐ DUAL ☒ SGL ☐ 0 DEG ☒ ANGLE: 45°	
X_O Ref. Point (L_O): 1" below horiz. weld			
Y_O Ref. Point (W_O): center line of 24" riser			

	Sizing Method	Angle (deg)	Reference Cal. Sheet	Set-Up / File Name
1	45° SHEAR			
2	60° SHEAR			
3	AATT			
4	DUAL 0°			

INDICATION INFORMATION

Ind.	Method	Weld Side	Depth R. Lig.	Max. Amp.	L1 (in)	Length (in)	L2 (in)	W1 (in)	Width (in)	W2 (in)	Indication Type

Remarks:

No crack like indications

[N1] See Attached Letter From J. B. Elder

Examiner: W. H. Nelson	Examiner:	Analyst: W. H. Nelson	Reviewer: J. B. Elder
WH Nelson		WH Nelson	[N1]
Level: III Date: 11/01/04	Date:	Level: III Date: 11/02/04	Level: III Date:

COGEMA-SVUT-INS-007.3, Rev. 2, Attachment 5 Rev. Dec. 03, 2003

AUTOMATED ULTRASONIC THICKNESS DATA REPORT	Job # 04-41	Riser # 30

Location: 200 EAST TANK FARM	Exam Start: 10/19/04 1003	Exam End: 1446
Component ID: 106-AP	Examination Surface: ☒ OD ☐ ID ☐ PAINTED	Nominal Thickness: .875"
Configuration: PLATE TO	Calibrated Range: 0.3" TO 1.0"	Temp: AMB °F
Total Length Examined: 19.9" / Scan Width: 15"	Ref. Level Correction (Trans. Corr.): 0 DB	
Procedure: COGEMA SVUT-INS-007.3 / Rev 2	Material Type: ☐ SS ☒ CS OTHER:	Condition: N/A
File Name: VERT.WALL/PLATE5	Transducer: ☒ DUAL ☐ SGL ☒ 0 DEG ☐ ANGLE: °	
X_O Ref. Point (L_O): 1" below horiz. weld		
Y_O Ref. Point (W_O): center line of 24" riser		

Part # / Indication	X Start (in)	X Stop (in)	Y Start (in)	Y Stop (in)	Ave. Thk. (in)	Min. Thk., R. Lig. (in)	Area Reportable	Max. Thk. (in)
0-12					.875"	.864"		.880"
12-19.9					.873"	.854"		.880"

Remarks:

[N1] See Attached Letter From J. B. Elder

Examiner: W. H. Nelson	Examiner:	Analyst: W. H. Nelson	Reviewer: J. B. Elder
Level: III Date: 10/19/04	Date:	Level: III Date: 10/26/04	[N1] Level: III Date:

COGEMA-SVUT-INS-007.3, Rev. 2, Attachment 6 — Rev. Dec. 03, 2003

AUTOMATED ULTRASONIC P-SCAN DATA REPORT		Job # 04-41	Riser # 30
Location: 200 EAST TANK FARM	System: PSP-4	Exam Start: 10/19/04 1009	Exam End: 1442
Component ID: 106-AP		Examination Surface: ☒ OD ☐ ID ☐ PAINTED	Nominal Thickness: 0.8750"
Configuration: PLATE TO		Calibrated Range: 0" TO 2.47"	Temp: AMB °F
Total Length Examined: 19.9"	Scan Width: 15"	Ref. Level Correction (Trans. Corr): 0 DB	
Procedure: COGEMA SVUT-INS-007.3	Rev. 2	Material Type: ☐ SS ☒ CS OTHER:	Condition: N/A
File Name / Item #: VERT.WALL/PLATE5		Transducer: ☐ DUAL ☒ SGL ☐ 0 DEG ☒ ANGLE: 45°	
X_O Ref. Point (L_O): 1" below horiz. weld			
Y_O Ref. Point (W_O): center line of 24" riser			

	Sizing Method	Angle (deg)	Reference Cal. Sheet	Set-Up / File Name
1	45° SHEAR			
2	60° SHEAR			
3	AATT			
4	DUAL 0°			

INDICATION INFORMATION

Ind.	Method	Weld Side	Depth R. Lig.	Max. Amp.	L1 (in)	Length (in)	L2 (in)	W1 (in)	Width (in)	W2 (in)	Indication Type

Remarks:

No crack like indications

[N1] See Attached Letter From J. B. Elder

Examiner: W. H. Nelson	Examiner:	Analyst: W. H. Nelson	Reviewer: J. B. Elder
Level: III Date: 10/19/04	Date:	Level: III Date: 10/26/04	[N1] Level: III Date:

COGEMA-SVUT-INS-007.3, Rev. 2, Attachment 5 — Rev. Dec. 03, 2003

AUTOMATED ULTRASONIC THICKNESS DATA REPORT	Job # 04-41	Riser # 30

Location: 200 EAST TANK FARM	Exam Start: 10/18/04 0911	Exam End: 1743
Component ID: 106-AP	Examination Surface: ☒ OD ☐ ID ☐ PAINTED	Nominal Thickness: .500"
Configuration: PLATE TO	Calibrated Range: 0.3" TO 1.0"	Temp: AMB °F
Total Length Examined: 90.3" / Scan Width: 15"	Ref. Level Correction (Trans. Corr.): 0 DB	
Procedure: COGEMA SVUT-INS-007.3 / Rev 2	Material Type: ☐ SS ☒ CS OTHER:	Condition: N/A
File Name: VERT.WALL/2ND/PLATE1	Transducer: ☒ DUAL ☐ SGL ☒ 0 DEG ☐ ANGLE: °	
X_O Ref. Point (L_O): 1" above bottom horiz.		
Y_O Ref. Point (W_O): 4" off center of center line of 24" riser, south of center line		

Part # / Indication	X Start (in)	X Stop (in)	Y Start (in)	Y Stop (in)	Ave. Thk. (in)	Min. Thk., R. Lig. (in)	Area Reportable	Max. Thk. (in)
0-12					.520"	.505"		.530"
12-24					.525"	.510"		.530"
24-36					.525"	.519"		.530"
36-48					.525"	.513"		.530"
48-60					.525"	.520"		.530"
60-72					.525"	.519"		.530"
72-84					.520"	.516"		.530"
84-90.3					.520"	.510"		.530"

Remarks:

Scan started at the bottom horizontal weld and scanned up to top horizontal weld.

[N1] See Attached Letter From J. B. Elder

Examiner: W. H. Nelson	Examiner:	Analyst: W. H. Nelson	Reviewer: J. B. Elder
WH Nelson		WH Nelson	[N1]
Level: III Date: 10/18/04	Date:	Level: III Date: 10/26/04	Level: III Date:

COGEMA-SVUT-INS-007.3, Rev. 2, Attachment 6 *Rev. Dec. 03, 2003*

AUTOMATED ULTRASONIC P-SCAN DATA REPORT			Job # 04-41	Riser # 30
Location: 200 EAST TANK FARM	System: PSP-4	Exam Start: 10/18/04 0916		Exam End: 1750
Component ID: 106-AP		Examination Surface: ☒ OD ☐ ID ☐ PAINTED		Nominal Thickness: 0.5000"
Configuration: PLATE TO		Calibrated Range: 0" TO 1.414"		Temp: AMB °F
Total Length Examined: 91.4"	Scan Width: 15"	Ref. Level Correction (Trans. Corr): 0 DB		
Procedure: COGEMA SVUT-INS-007.3	Rev. 2	Material Type: ☐ SS ☒ CS OTHER:		Condition: N/A
File Name / Item #: VERT.WALL/2ND/PLATE1		Transducer: ☐ DUAL ☒ SGL ☐ 0 DEG ☒ ANGLE: 45°		
X_O Ref. Point (L_O): 1" above bottom horiz. weld				
Y_O Ref. Point (W_O): 4" off center of center line of 24" riser,south of center line				

	Sizing Method	Angle (deg)	Reference Cal. Sheet	Set-Up / File Name
1	45° SHEAR			
2	60° SHEAR			
3	AATT			
4	DUAL 0°			

INDICATION INFORMATION

Ind.	Method	Weld Side	Depth R. Lig.	Max. Amp.	L1 (in)	Length (in)	L2 (in)	W1 (in)	Width (in)	W2 (in)	Indication Type

Remarks:

Scan started at the bottom horizontal weld and scanned up to the top horizontal weld.
No crack like indications

[N1] See Attached Letter From J. B. Elder

Examiner: W. H. Nelson	Examiner:	Analyst: W. H. Nelson	Reviewer: J. B. Elder
WH Nelson		WH Nelson	[N1]
Level: III Date: 10/18/04	Date:	Level: III Date: 10/26/04	Level: III Date:

COGEMA-SVUT-INS-007.3, Rev. 2, Attachment 5 Rev. Dec. 03, 2003

AUTOMATED ULTRASONIC THICKNESS DATA REPORT	Job # 04-41	Riser # 30

Location: 200 EAST TANK FARM	Exam Start: 11/03/04 0851	Exam End: 1931
Component ID: 106-AP	Examination Surface: ☒ OD ☐ ID ☐ PAINTED	Nominal Thickness: .500"
Configuration: PLATE TO	Calibrated Range: .3" TO 1.0"	Temp: AMB °F
Total Length Examined: 88.2" / Scan Width: 15"	Ref. Level Correction (Trans. Corr.): 0 DB	
Procedure: COGEMA SVUT-INS-007.3 / Rev 2	Material Type: ☐ SS ☒ CS OTHER:	Condition: N/A
File Name: VERT.WALL/2ND/PLATE2	Transducer: ☒ DUAL ☐ SGL ☒ 0 DEG ☐ ANGLE: °	

X_O Ref. Point (L_O): 1" below horiz. weld

Y_O Ref. Point (W_O): 17" from center line of 1st pass to center line of second pass

Part # / Indication	X Start (in)	X Stop (in)	Y Start (in)	Y Stop (in)	Ave. Thk. (in)	Min. Thk., R. Lig. (in)	Area Reportable	Max. Thk. (in)
0-12					.513"	.489"		.520"
12-24					.515"	.512"		.520"
24-36					.517"	.502"		.520"
36-48					.517"	.502"		.520"
48-60					.518"	.499"		.525"
60-72					.519"	.513"		.525"
72-84					.517"	.494"		.520"
84-88.2					.515"	.496"		.520"

Remarks:

[N1] See Attached Letter From J. B. Elder

Examiner: W. H. Nelson	Examiner:	Analyst: W. H. Nelson	Reviewer: J. B. Elder
WH Nelson		WH Nelson	[N1]
Level: III Date: 11/03/04	Date:	Level: III Date: 11/14/04	Level: III Date:

COGEMA-SVUT-INS-007.3, Rev. 2, Attachment 6 — Rev. Dec. 03, 2003

AUTOMATED ULTRASONIC P-SCAN DATA REPORT		Job # 04-41	Riser # 30
Location: 200 EAST TANK FARM	System: PSP-4	Exam Start: 11/03/04 0855	Exam End: 1936
Component ID: 106-AP		Examination Surface: ☒ OD ☐ ID ☐ PAINTED	Nominal Thickness: 0.5000"
Configuration: PLATE TO		Calibrated Range: O" TO 1.414"	Temp: AMB °F
Total Length Examined: 88.1"	Scan Width: 15"	Ref. Level Correction (Trans. Corr): 0 DB	
Procedure: COGEMA SVUT-INS-007.3	Rev. 2	Material Type: ☐ SS ☒ CS OTHER:	Condition: N/A
File Name / Item #: VERT.WALL/2ND/PLATE2		Transducer: ☐ DUAL ☒ SGL ☐ 0 DEG ☒ ANGLE: 45°	
X_O Ref. Point (L_O): Started 1" below horiz. weld			
Y_O Ref. Point (W_O): 17" from center line of first pass to center line of second pass			

Sizing Method	Angle (deg)	Reference Cal. Sheet	Set-Up / File Name
1 45° SHEAR			
2 60° SHEAR			
3 AATT			
4 DUAL 0°			

INDICATION INFORMATION

Ind.	Method	Weld Side	Depth R. Lig.	Max. Amp.	L1 (in)	Length (in)	L2 (in)	W1 (in)	Width (in)	W2 (in)	Indication Type

Remarks:

No crack like indications

[N1] See Attached Letter From J. B. Elder

Examiner: W. H. Nelson	Examiner:	Analyst: W. H. Nelson	Reviewer: J. B. Elder
WH Nelson		WH Nelson	[N1]
Level: III Date: 11/03/04	Date:	Level: III Date: 12/02/04	Level: III Date:

COGEMA-SVUT-INS-007.3, Rev. 2, Attachment 5 Rev. Dec. 03, 2003

AUTOMATED ULTRASONIC THICKNESS DATA REPORT	Job # 04-41	Riser # 30

Location: 200 EAST TANK FARM	Exam Start: 11/03/04 0851	Exam End: 1732
Component ID: 106-AP	Examination Surface: ☒ OD ☐ ID ☐ PAINTED	Nominal Thickness: .5625"
Configuration: PLATE TO	Calibrated Range: 0.3" TO 1.0"	Temp: AMB °F
Total Length Examined: 88.6" / Scan Width: 15"	Ref. Level Correction (Trans. Corr.): 0 DB	
Procedure: COGEMA SVUT-INS-007.3 / Rev 2	Material Type: ☐ SS ☒ CS OTHER:	Condition: N/A
File Name: VERT.WALL/2ND/PLATE3	Transducer: ☒ DUAL ☐ SGL ☒ 0 DEG ☐ ANGLE: °	
X_O Ref. Point (L_O): 1" below horiz. weld		
Y_O Ref. Point (W_O): 17" from center line of 1st pass to center line of second pass		

Part # / Indication	X Start (in)	X Stop (in)	Y Start (in)	Y Stop (in)	Ave. Thk. (in)	Min. Thk., R. Lig. (in)	Area Reportable	Max. Thk. (in)
0-12					.567"	.539"		.575"
12-24					.570"	.555"		.575"
24-36					.570"	.560"		.575"
36-48					.572"	.560"		.575"
48-60					.572"	.558"		.575"
60-72					.570"	.553"		.575"
72-84					.568"	.551"		.575"
84-88.6					.565"	.548"		.575"

Remarks:

[N1] See Attached Letter From J. B. Elder

Examiner: W. H. Nelson	Examiner:	Analyst: W. H. Nelson	Reviewer: J. B. Elder
WH Nelson		WH Nelson	[N1]
Level: III Date: 11/03/04	Date:	Level: III Date: 11/14/04	Level: III Date:

COGEMA-SVUT-INS-007.3, Rev. 2, Attachment 6 — Rev. Dec. 03, 2003

AUTOMATED ULTRASONIC P-SCAN DATA REPORT		Job # 04-41	Riser # 30
Location: 200 EAST TANK FARM	System: PSP-4	Exam Start: 11/03/04 0855	Exam End: 1936
Component ID: 106-AP		Examination Surface: ☒ OD ☐ ID ☐ PAINTED	Nominal Thickness: ~~0.5620"~~ .5625 WDN 12/10/04
Configuration: PLATE TO		Calibrated Range: 0" TO 2.2"	Temp: AMB °F
Total Length Examined: 88.5"	Scan Width: 15"	Ref. Level Correction (Trans. Corr): 0 DB	
Procedure: COGEMA SVUT-INS-007.3	Rev. 2	Material Type: ☐ SS ☒ CS OTHER:	Condition: N/A
File Name / Item #: VERT.WALL/2ND/PLATE3		Transducer: ☐ DUAL ☒ SGL ☐ 0 DEG ☒ ANGLE: 45°	
X_o Ref. Point (L_o): Started 1" below horiz. weld			
Y_o Ref. Point (W_o): 17" from center line of first pass to center line of second pass			

	Sizing Method	Angle (deg)	Reference Cal. Sheet	Set-Up / File Name
1	45° SHEAR			
2	60° SHEAR			
3	AATT			
4	DUAL 0°			

INDICATION INFORMATION

Ind.	Method	Weld Side	Depth R. Lig.	Max. Amp.	L1 (in)	Length (in)	L2 (in)	W1 (in)	Width (in)	W2 (in)	Indication Type

Remarks:
No crack like indications

[N1] See Attached Letter From J. B. Elder

Examiner: W. H. Nelson	Examiner:	Analyst: W. H. Nelson	Reviewer: J. B. Elder
WHNelson		WHNelson	[N1]
Level: III Date: 11/03/04	Date:	Level: III Date: 12/02/04	Level: III Date:

COGEMA-SVUT-INS-007.3, Rev. 2, Attachment 5 — Rev. Dec. 03, 2003

AUTOMATED ULTRASONIC THICKNESS DATA REPORT	Job # 04-41	Riser # 30

Location: 200 EAST TANK FARM	Exam Start: 11/02/04 0729	Exam End: 1417
Component ID: 106-AP	Examination Surface: ☒ OD ☐ ID ☐ PAINTED	Nominal Thickness: .750"
Configuration: PLATE TO	Calibrated Range: 0.3" TO 1.0"	Temp: AMB °F
Total Length Examined: 104.1" / Scan Width: 15"	Ref. Level Correction (Trans. Corr.): 0 DB	
Procedure: COGEMA SVUT-INS-007.3 / Rev 2	Material Type: ☐ SS ☒ CS OTHER:	Condition: N/A
File Name: VERT.WALL/2ND/PLATE4	Transducer: ☒ DUAL ☐ SGL ☒ 0 DEG ☐ ANGLE: °	
X_O Ref. Point (L_O): 1" below horiz. weld		
Y_O Ref. Point (W_O): 17" from center line of 1st pass to center line of second pass		

Part # / Indication	X Start (in)	X Stop (in)	Y Start (in)	Y Stop (in)	Ave. Thk. (in)	Min. Thk., R. Lig. (in)	Area Reportable	Max. Thk. (in)
0-12					.769"	.754"		.776"
12-24					.768"	.765"		.776"
24-36					.768"	.766"		.776"
36-48					.769"	.766"		.776"
48-60					.769"	.766"		.776"
60-72					.769"	.765"		.776"
72-84					.773"	.758"		.776"
84-96					.771"	.765"		.775"
96-104.1					.764"	.747"		.775"

Remarks:

[N1] See Attached Letter From J. B. Elder

Examiner: W. H. Nelson	Examiner:	Analyst: W. H. Nelson	Reviewer: J. B. Elder
WH Nelson		WH Nelson	[N1]
Level: III Date: 11/02/04	Date:	Level: III Date: 11/02/04	Level: III Date:

COGEMA-SVUT-INS-007.3, Rev. 2, Attachment 6 — Rev. Dec. 03, 2003

AUTOMATED ULTRASONIC P-SCAN DATA REPORT		Job # 04-41	Riser # 30
Location: 200 EAST TANK FARM	System: PSP-4	Exam Start: 11/02/04 0736	Exam End: 1440
Component ID: 106-AP		Examination Surface: ☒ OD ☐ ID ☐ PAINTED	Nominal Thickness: 0.7500"
Configuration: PLATE TO		Calibrated Range: 0" TO 2.12	Temp: AMB °F
Total Length Examined: 104"	Scan Width: 15"	Ref. Level Correction (Trans. Corr): 0 DB	
Procedure: COGEMA SVUT-INS-007.3	Rev. 2	Material Type: ☐ SS ☒ CS OTHER:	Condition: N/A
File Name / Item #: VERT.WALL/2ND/PLATE4		Transducer: ☐ DUAL ☒ SGL ☐ 0 DEG ☒ ANGLE: 45°	
X_O Ref. Point (L_O): 1" below horiz. weld			
Y_O Ref. Point (W_O): 17" from center line of 1st pass to center line of 2nd pass			

	Sizing Method	Angle (deg)	Reference Cal. Sheet	Set-Up / File Name
1	45° SHEAR			
2	60° SHEAR			
3	AATT			
4	DUAL 0°			

INDICATION INFORMATION

Ind.	Method	Weld Side	Depth R. Lig.	Max. Amp.	L1 (in)	Length (in)	L2 (in)	W1 (in)	Width (in)	W2 (in)	Indication Type

Remarks:

No crack like indications

[N1] See Attached Letter From J. B. Elder

Examiner: W. H. Nelson	Examiner:	Analyst: W. H. Nelson	Reviewer: J. B. Elder
Level: III Date: 11/02/04	Date:	Level: III Date: 11/02/04	[N1] Level: III Date:

COGEMA-SVUT-INS-007.3, Rev. 2, Attachment 5 — Rev. Dec. 03, 2003

AUTOMATED ULTRASONIC THICKNESS DATA REPORT	Job # 04-41	Riser # 30

Location: 200 EAST TANK FARM	Exam Start: 10/19/04 1003	Exam End: 1446
Component ID: 106-AP	Examination Surface: ☒ OD ☐ ID ☐ PAINTED	Nominal Thickness: .875"
Configuration: PLATE TO	Calibrated Range: 0.3" TO 1.0"	Temp: AMB °F
Total Length Examined: 19.5" / Scan Width: 15"	Ref. Level Correction (Trans. Corr.): 0 DB	
Procedure: COGEMA SVUT-INS-007.3 / Rev 2	Material Type: ☐ SS ☒ CS OTHER:	Condition: N/A
File Name: VERT.WALL/2ND/PLATE5	Transducer: ☒ DUAL ☐ SGL ☒ 0 DEG ☐ ANGLE: °	
X_o Ref. Point (L_o): 1" below horiz. weld		
Y_o Ref. Point (W_o): 17" from center line of first pass		

Part # / Indication	X Start (in)	X Stop (in)	Y Start (in)	Y Stop (in)	Ave. Thk. (in)	Min. Thk., R. Lig. (in)	Area Reportable	Max. Thk. (in)
0-12					.875"	.867"		.880"
12-19.5					.873"	.867"		.880"

Remarks:

[N1] See Attached Letter From J. B. Elder

Examiner: W. H. Nelson	Examiner:	Analyst: W. H. Nelson	Reviewer: J. B. Elder
Level: III Date: 10/19/04	Date:	Level: III Date: 10/26/04	[N1] Level: III Date:

COGEMA-SVUT-INS-007.3, Rev. 2, Attachment 6 — Rev. Dec. 03, 2003

AUTOMATED ULTRASONIC P-SCAN DATA REPORT		Job # 41-04	Riser # 30
Location: 200 EAST TANK FARM	System: PSP-4	Exam Start: 10/19/04 1009	Exam End: 1442
Component ID: 106-AP		Examination Surface: ☒ OD ☐ ID ☐ PAINTED	Nominal Thickness: 0.8750"
Configuration: PLATE TO		Calibrated Range: 0.3" TO 1.0"	Temp: AMB °F
Total Length Examined: 19.5"	Scan Width: 15"	Ref. Level Correction (Trans. Corr): 0 DB	
Procedure: COGEMA SVUT-INS-007.3	Rev. 2	Material Type: ☐ SS ☒ CS OTHER:	Condition: N/A
File Name / Item #: VERT.WALL/2ND/PLATE5		Transducer: ☐ DUAL ☒ SGL ☐ 0 DEG ☒ ANGLE: 45°	
X_O Ref. Point (L_O): 1" below horiz. weld			
Y_O Ref. Point (W_O): 17" from center line of first pass			

	Sizing Method	Angle (deg)	Reference Cal. Sheet	Set-Up / File Name
1	45° SHEAR			
2	60° SHEAR			
3	AATT			
4	DUAL 0°			

INDICATION INFORMATION

Ind.	Method	Weld Side	Depth R. Lig.	Max. Amp.	L1 (in)	Length (in)	L2 (in)	W1 (in)	Width (in)	W2 (in)	Indication Type

Remarks:

No crack like indications

[N1] See Attached Letter From J. B. Elder

Examiner: W. H. Nelson	Examiner:	Analyst: W. H. Nelson	Reviewer: J. B. Elder
Level: III Date: 10/19/04	Date:	Level: III Date: 10/26/04	[N1] Level: III Date:

COGEMA-SVUT-INS-007.3, Rev. 2, Attachment 5 Rev. Dec. 03, 2003

AUTOMATED ULTRASONIC THICKNESS DATA REPORT	Job # 04-41	Riser # 30

Location: 200 EAST TANK FARM	Exam Start: 11/04/04 0852	Exam End: 1530
Component ID: 106-AP	Examination Surface: ☒ OD ☐ ID ☐ PAINTED	Nominal Thickness: .500"
Configuration: PLATE TO PLATE	Calibrated Range: .3" TO 1.0"	Temp: AMB °F
Total Length Examined: 15.3" / Scan Width: 11.4"	Ref. Level Correction (Trans. Corr.): 0 DB	
Procedure: COGEMA SVUT-INS-007.3 / Rev 2	Material Type: ☐ SS ☒ CS OTHER:	Condition: N/A
File Name: VERT.WELD/PLATE2	Transducer: ☒ DUAL ☐ SGL ☒ 0 DEG ☐ ANGLE: °	
X_O Ref. Point (L_O): Started 1" below horiz. weld		
Y_O Ref. Point (W_O): Center line of vert. weld		

Part # / Indication	X Start (in)	X Stop (in)	Y Start (in)	Y Stop (in)	Ave. Thk. (in)	Min. Thk., R. Lig. (in)	Area Reportable	Max. Thk. (in)
0-12					.510"	.491"		.520"
12-15.3					.510"	.499"		.520"

Remarks:

[N1] See Attached Letter From J. B. Elder

Examiner: W. H. Nelson	Examiner:	Analyst: W. H. Nelson	Reviewer: J. B. Elder
WH Nelson		WH Nelson	[N1]
Level: III Date: 11/04/04	Date:	Level: III Date: 11/09/04	Level: III Date:

COGEMA-SVUT-INS-007.3, Rev. 2, Attachment 6 — Rev. Dec. 03, 2003

AUTOMATED ULTRASONIC P-SCAN DATA REPORT		Job # 04-41	Riser # 30
Location: 200 EAST TANK FARM	System: PSP-4	Exam Start: 11/04/04 0845	Exam End: 1522
Component ID: 106-AP		Examination Surface: ☒ OD ☐ ID ☐ PAINTED	Nominal Thickness: 0.5000"
Configuration: PLATE TO PLATE		Calibrated Range: 0" TO 2"	Temp: AMB °F
Total Length Examined: 12.9"	Scan Width: 10.9"	Ref. Level Correction (Trans. Corr): 0 DB	
Procedure: COGEMA SVUT-INS-007.3	Rev. 2	Material Type: ☐ SS ☒ CS OTHER:	Condition: N/A
File Name / Item #: VERT.WELD/PLATE2		Transducer: ☐ DUAL ☒ SGL ☐ 0 DEG ☒ ANGLE: 60°	
X_o Ref. Point (L_o): Started 1" below horiz. weld			
Y_o Ref. Point (W_o): Center line of vert. weld			

	Sizing Method	Angle (deg)	Reference Cal. Sheet	Set-Up / File Name
1	45° SHEAR			
2	60° SHEAR			
3	AATT			
4	DUAL 0°			

INDICATION INFORMATION

Ind.	Method	Weld Side	Depth R. Lig.	Max. Amp.	L1 (in)	Length (in)	L2 (in)	W1 (in)	Width (in)	W2 (in)	Indication Type

Remarks:

No crack like indications

[N1] See Attached Letter From J. B. Elder

Examiner: W. H. Nelson	Examiner:	Analyst: W. H. Nelson	Reviewer: J. B. Elder
WH Nelson		WH Nelson	[N1]
Level: III Date: 11/04/04	Date:	Level: III Date: 11/09/04	Level: III Date:

COGEMA-SVUT-INS-007.3, Rev. 2, Attachment 5 Rev. Dec. 03, 2003

AUTOMATED ULTRASONIC THICKNESS DATA REPORT	Job # 04-41	Riser # 30

Location: 200 EAST TANK FARM	Exam Start: 11/04/04 0852	Exam End: 1530
Component ID: 106-AP	Examination Surface: ☒ OD ☐ ID ☐ PAINTED	Nominal Thickness: .500"
Configuration: PLATE TO PLATE	Calibrated Range: .3" TO 1.0"	Temp: AMB °F
Total Length Examined: 76.1" / Scan Width: 11.4"	Ref. Level Correction (Trans. Corr.): 0 DB	
Procedure: COGEMA SVUT-INS-007.3 / Rev 2	Material Type: ☐ SS ☒ CS OTHER:	Condition: N/A
File Name: VERT.WELD/PLATE2A	Transducer: ☒ DUAL ☐ SGL ☒ 0 DEG ☐ ANGLE: °	
X_O Ref. Point (L_O): 2A started @ 12.9" of 2		
Y_O Ref. Point (W_O): Center line of vert. weld		

Part # / Indication	X Start (in)	X Stop (in)	Y Start (in)	Y Stop (in)	Ave. Thk. (in)	Min. Thk., R. Lig. (in)	Area Reportable	Max. Thk. (in)
0-12					.510"	.500"		.520"
12-24					.510"	.493"		.520"
24-36					.510"	.500"		.520"
36-48					.510"	.495"		.520"
48-60					.510"	.488"		.520"
60-72					.510"	.481"		.520"
72-76.1					.510"	.501"		.520"

Remarks:

[N1] See Attached Letter From J. B. Elder

Examiner: W. H. Nelson	Examiner:	Analyst: W. H. Nelson	Reviewer: J. B. Elder
WHNelson		WHNelson	[N1]
Level: III Date: 11/04/04	Date:	Level: III Date: 11/09/04	Level: III Date:

COGEMA-SVUT-INS-007.3, Rev. 2, Attachment 6 *Rev. Dec. 03, 2003*

AUTOMATED ULTRASONIC P-SCAN DATA REPORT		Job # 04-41	Riser # 30
Location: 200 EAST TANK FARM	System: PSP-4	Exam Start: 11/04/04 0845	Exam End: 1522
Component ID: 106-AP		Examination Surface: ☒ OD ☐ ID ☐ PAINTED	Nominal Thickness: 0.5000"
Configuration: PLATE TO PLATE		Calibrated Range: 0" TO 2"	Temp: AMB °F
Total Length Examined: 73.7"	Scan Width: 10.9"	Ref. Level Correction (Trans. Corr): 0 DB	
Procedure: COGEMA SVUT-INS-007.3	Rev. 2	Material Type: ☐ SS ☒ CS OTHER:	Condition: N/A
File Name / Item #: VERT.WELD/PLATE2A		Transducer: ☐ DUAL ☒ SGL ☐ 0 DEG ☒ ANGLE: 60°	
X_o Ref. Point (L_o): 2A started @ 12.9" of 2			
Y_o Ref. Point (W_o): Center line of vert. weld			

	Sizing Method	Angle (deg)	Reference Cal. Sheet	Set-Up / File Name
1	45° SHEAR			
2	60° SHEAR			
3	AATT			
4	DUAL 0°			

INDICATION INFORMATION

Ind.	Method	Weld Side	Depth R. Lig.	Max. Amp.	L1 (in)	Length (in)	L2 (in)	W1 (in)	Width (in)	W2 (in)	Indication Type

Remarks:

No crack like indications

[N1] See Attached Letter From J. B. Elder

Examiner: W. H. Nelson	Examiner:	Analyst: W. H. Nelson	Reviewer: J. B. Elder
(W.H.) Nelson		(W.H.) Nelson	[N1]
Level: III Date: 11/04/04	Date:	Level: III Date: 11/09/04	Level: III Date:

COGEMA-SVUT-INS-007.3, Rev. 2, Attachment 5 *Rev. Dec. 03, 2003*

AUTOMATED ULTRASONIC THICKNESS DATA REPORT	Job # 04-41	Riser # 30

Location: 200 EAST TANK FARM	Exam Start: 11/09/04 0727	Exam End: 1505
Component ID: 106-AP	Examination Surface: ☒ OD ☐ ID ☐ PAINTED	Nominal Thickness: .5625"
Configuration: PLATE TO PLATE	Calibrated Range: .3" TO 1.0"	Temp: AMB °F
Total Length Examined: 43.5" / Scan Width: 11.5"	Ref. Level Correction (Trans. Corr.): 0 DB	
Procedure: COGEMA SVUT-INS-007.3 / Rev 2	Material Type: ☐ SS ☒ CS OTHER:	Condition: N/A
File Name: VERT.WELD/PLATE3	Transducer: ☒ DUAL ☐ SGL ☒ 0 DEG ☐ ANGLE: °	
X_O Ref. Point (L_O): Started 1" below horiz. weld		
Y_O Ref. Point (W_O): Center line of vert. weld		

Part # / Indication	X Start (in)	X Stop (in)	Y Start (in)	Y Stop (in)	Ave. Thk. (in)	Min. Thk., R. Lig. (in)	Area Reportable	Max. Thk. (in)
0-12					.550"	.537"		.560"
12-24					.550"	.532"		.560"
24-36					.550"	.538"		.560"
36-43.5					.550"	.543"		.560"

Remarks:

[N1] See Attached Letter From J. B. Elder

Examiner: W. H. Nelson	Examiner:	Analyst: W. H. Nelson	Reviewer: J. B. Elder
WHNelson		WHNelson	[N1]
Level: III Date: 11/09/04	Date:	Level: III Date: 11/12/04	Level: III Date:

COGEMA-SVUT-INS-007.3, Rev. 2, Attachment 6 *Rev. Dec. 03, 2003*

AUTOMATED ULTRASONIC P-SCAN DATA REPORT			Job # 04-41	Riser # 30
Location: 200 EAST TANK FARM	System: PSP-4	Exam Start: 11/09/04 0719		Exam End: 1500
Component ID: 106-AP		Examination Surface: ☒ OD ☐ ID ☐ PAINTED		Nominal Thickness: 0.5625"
Configuration: PLATE TO PLATE		Calibrated Range: 0" TO 2.25"		Temp: AMB °F
Total Length Examined: 41"	Scan Width: 11.1"	Ref. Level Correction (Trans. Corr): 0 DB		
Procedure: COGEMA SVUT-INS-007.3	Rev. 2	Material Type: ☐ SS ☒ CS OTHER:		Condition: N/A
File Name / Item #: VERT.WELD/PLATE3		Transducer: ☐ DUAL ☒ SGL ☐ 0 DEG ☒ ANGLE: 60°		
X_O Ref. Point (L_O): Started 1" below horiz. weld				
Y_O Ref. Point (W_O): Center line of vert. weld				

	Sizing Method	Angle (deg)	Reference Cal. Sheet	Set-Up / File Name
1	45° SHEAR			
2	60° SHEAR			
3	AATT			
4	DUAL 0°			

INDICATION INFORMATION

Ind.	Method	Weld Side	Depth R. Lig.	Max. Amp.	L1 (in)	Length (in)	L2 (in)	W1 (in)	Width (in)	W2 (in)	Indication Type

Remarks:
No crack like indications

[N1] See Attached Letter From J. B. Elder

Examiner: W. H. Nelson	Examiner:	Analyst: W. H. Nelson	Reviewer: J. B. Elder
WHNelson		WHNelson	[N1]
Level: III Date: 11/09/04	Date:	Level: III Date: 11/12/04	Level: III Date:

COGEMA-SVUT-INS-007.3, Rev. 2, Attachment 5 Rev. Dec. 03, 2003

AUTOMATED ULTRASONIC THICKNESS DATA REPORT	Job # 04-41	Riser # 30

Location: 200 EAST TANK FARM	Exam Start: 11/09/04 0727	Exam End: 1505
Component ID: 106-AP	Examination Surface: ☒ OD ☐ ID ☐ PAINTED	Nominal Thickness: .5625"
Configuration: PLATE TO PLATE	Calibrated Range: .3" TO 1.0"	Temp: AMB °F
Total Length Examined: 43.8" / Scan Width: 11.5"	Ref. Level Correction (Trans. Corr.): 0 DB	
Procedure: COGEMA SVUT-INS-007.3 / Rev 2	Material Type: ☐ SS ☒ CS OTHER:	Condition: N/A
File Name: VERT.WELD/PLATE3A	Transducer: ☒ DUAL ☐ SGL ☒ 0 DEG ☐ ANGLE: °	
X_o Ref. Point (L_o): 3A started @ end of 3		
Y_o Ref. Point (W_o): Center line of vert. weld		

Part # / Indication	X Start (in)	X Stop (in)	Y Start (in)	Y Stop (in)	Ave. Thk. (in)	Min. Thk., R. Lig. (in)	Area Reportable	Max. Thk. (in)
0-12					.550"	.539"		.560"
12-24					.550"	.538"		.560"
24-36					.550"	.538"		.560"
36-43.8					.550"	.538"		.560"

Remarks:

[N1] See Attached Letter From J. B. Elder

Examiner: W. H. Nelson	Examiner:	Analyst: W. H. Nelson	Reviewer: J. B. Elder
WH Nel		WH Nel	[N1]
Level: III Date: 11/09/04	Date:	Level: III Date: 11/12/04	Level: III Date:

COGEMA-SVUT-INS-007.3, Rev. 2, Attachment 6 *Rev. Dec. 03, 2003*

AUTOMATED ULTRASONIC P-SCAN DATA REPORT		Job # 04-41	Riser # 30
Location: 200 EAST TANK FARM	System: PSP-4	Exam Start: 11/09/04 0719	Exam End: 1500
Component ID: 106-AP		Examination Surface: ☒ OD ☐ ID ☐ PAINTED	Nominal Thickness: 0.5625"
Configuration: PLATE TO PLATE		Calibrated Range: 0" TO 2.25"	Temp: AMB °F
Total Length Examined: 41.5"	Scan Width: 11.1"	Ref. Level Correction (Trans. Corr): 0 DB	
Procedure: COGEMA SVUT-INS-007.3	Rev. 2	Material Type: ☐ SS ☒ CS OTHER:	Condition: N/A
File Name / Item #: VERT.WELD/PLATE3A		Transducer: ☐ DUAL ☒ SGL ☐ 0 DEG ☒ ANGLE: 60°	
X_o Ref. Point (L_o): 3A started @ end of 3			
Y_o Ref. Point (W_o): Center line of vert. weld			

	Sizing Method	Angle (deg)	Reference Cal. Sheet	Set-Up / File Name
1	45° SHEAR			
2	60° SHEAR			
3	AATT			
4	DUAL 0°			

INDICATION INFORMATION

Ind.	Method	Weld Side	Depth R. Lig.	Max. Amp.	L1 (in)	Length (in)	L2 (in)	W1 (in)	Width (in)	W2 (in)	Indication Type

Remarks:
No crack like indications

[N1] See Attached Letter From J. B. Elder

Examiner: W. H. Nelson	Examiner:	Analyst: W. H. Nelson	Reviewer: J. B. Elder
WHNelson		WHNelson	[N1]
Level: III Date: 11/09/04	Date:	Level: III Date: 11/12/04	Level: III Date:

COGEMA-SVUT-INS-007.3, Rev. 2, Attachment 5 *Rev. Dec. 03, 2003*

AUTOMATED ULTRASONIC THICKNESS DATA REPORT	Job # 04-41	Riser # 30

Location: 200 EAST TANK FARM	Exam Start: 11/08/04 0750	Exam End: 1915
Component ID: 106-AP	Examination Surface: ☒ OD ☐ ID ☐ PAINTED	Nominal Thickness: .750"
Configuration: PLATE TO PLATE	Calibrated Range: .3" TO 1.0"	Temp: AMB °F
Total Length Examined: 81.1" / Scan Width: 11.4"	Ref. Level Correction (Trans. Corr.): 0 DB	
Procedure: COGEMA SVUT-INS-007.3 / Rev 2	Material Type: ☐ SS ☒ CS OTHER:	Condition: N/A
File Name: VERT.WELD/PLATE4	Transducer: ☒ DUAL ☐ SGL ☒ 0 DEG ☐ ANGLE: °	
X_O Ref. Point (L_O): Started 1" below horiz. weld		
Y_O Ref. Point (W_O): Center line of vert. weld		

Part # / Indication	X Start (in)	X Stop (in)	Y Start (in)	Y Stop (in)	Ave. Thk. (in)	Min. Thk., R. Lig. (in)	Area Reportable	Max. Thk. (in)
0-12					.755"	.723"		.775"
12-24					.755"	.739"		.775"
24-36					.755"	.740"		.775"
36-48					.760"	.740"		.775"
48-60					.760"	.744"		.775"
60-72					.760"	.737"		.775"
72-81.1					.760"	.741"		.775"

Remarks:

[N1] See Attached Letter From J. B. Elder

Examiner: W. H. Nelson	Examiner:	Analyst: W. H. Nelson	Reviewer: J. B. Elder
Level: III Date: 11/08/04	Date:	Level: III Date: 11/12/04	[N1] Level: III Date:

COGEMA-SVUT-INS-007.3, Rev. 2, Attachment 6 — Rev. Dec. 03, 2003

AUTOMATED ULTRASONIC P-SCAN DATA REPORT		Job # 04-41	Riser # 30
Location: 200 EAST TANK FARM	System: PSP-4	Exam Start: 11/08/04 0736	Exam End: 1920
Component ID: 106-AP		Examination Surface: ☒ OD ☐ ID ☐ PAINTED	Nominal Thickness: 0.7500"
Configuration: PLATE TO PLATE		Calibrated Range: 0" TO 3"	Temp: AMB °F
Total Length Examined: 78.7"	Scan Width: 10.8"	Ref. Level Correction (Trans. Corr): 0 DB	
Procedure: COGEMA SVUT-INS-007.3	Rev. 2	Material Type: ☐ SS ☒ CS OTHER:	Condition: N/A
File Name / Item #: VERT.WELD/PLATE4		Transducer: ☐ DUAL ☒ SGL ☐ 0 DEG ☒ ANGLE: 60°	
X_o Ref. Point (L_o): Started 1" below horiz. weld			
Y_o Ref. Point (W_o): Center line of vert. weld			

	Sizing Method	Angle (deg)	Reference Cal. Sheet	Set-Up / File Name
1	45° SHEAR			
2	60° SHEAR			
3	AATT			
4	DUAL 0°			

INDICATION INFORMATION

Ind.	Method	Weld Side	Depth R. Lig.	Max. Amp.	L1 (in)	Length (in)	L2 (in)	W1 (in)	Width (in)	W2 (in)	Indication Type

Remarks:

No crack like indications

[N1] See Attached Letter From J. B. Elder

Examiner: W. H. Nelson	Examiner:	Analyst: W. H. Nelson	Reviewer: J. B. Elder
WHNelson		WHNelson	[N1]
Level: III Date: 11/08/04	Date:	Level: III Date: 11/12/04	Level: III Date:

COGEMA-SVUT-INS-007.3, Rev. 2, Attachment 5 Rev. Dec. 03, 2003

AUTOMATED ULTRASONIC THICKNESS DATA REPORT	Job # 04-41	Riser # 30

Location: 200 EAST TANK FARM	Exam Start: 11/08/04 0750	Exam End: 1915
Component ID: 106-AP	Examination Surface: ☒ OD ☐ ID ☐ PAINTED	Nominal Thickness: .750"
Configuration: PLATE TO PLATE	Calibrated Range: .3" TO 1.0"	Temp: AMB °F
Total Length Examined: 8" / Scan Width: 11.4"	Ref. Level Correction (Trans. Corr.): 0 DB	
Procedure: COGEMA SVUT-INS-007.3 / Rev 2	Material Type: ☐ SS ☒ CS OTHER:	Condition: N/A
File Name: VERT.WELD/PLATE4A	Transducer: ☒ DUAL ☐ SGL ☒ 0 DEG ☐ ANGLE: °	
X_O Ref. Point (L_O): 4A started @ end of 4		
Y_O Ref. Point (W_O): Center line of vert. weld		

Part # / Indication	X Start (in)	X Stop (in)	Y Start (in)	Y Stop (in)	Ave. Thk. (in)	Min. Thk., R. Lig. (in)	Area Reportable	Max. Thk. (in)
0-8					.760"	.744"		.775"

Remarks:

[N1] See Attached Letter From J. B. Elder

Examiner: W. H. Nelson	Examiner:	Analyst: W. H. Nelson	Reviewer: J. B. Elder
WHNelson		WHNelson	[N1]
Level: III Date: 11/08/04	Date:	Level: III Date: 11/12/04	Level: III Date:

COGEMA-SVUT-INS-007.3, Rev. 2, Attachment 6 — Rev. Dec. 03, 2003

AUTOMATED ULTRASONIC P-SCAN DATA REPORT		Job # 04-41	Riser # 30
Location: 200 EAST TANK FARM	System: PSP-4	Exam Start: 11/08/04 0736	Exam End: 1920
Component ID: 106-AP		Examination Surface: ☒ OD ☐ ID ☐ PAINTED	Nominal Thickness: 0.7500"
Configuration: PLATE TO PLATE		Calibrated Range: 0" TO 3"	Temp: AMB °F
Total Length Examined: 5.4"	Scan Width: 10.8"	Ref. Level Correction (Trans. Corr): 0 DB	
Procedure: COGEMA SVUT-INS-007.3	Rev. 2	Material Type: ☐ SS ☒ CS OTHER:	Condition: N/A
File Name / Item #: VERT.WELD/PLATE4A		Transducer: ☐ DUAL ☒ SGL ☐ 0 DEG ☒ ANGLE: 60°	
X_o Ref. Point (L_o): 4A started @ end of 4			
Y_o Ref. Point (W_o): Center line of vert. weld			

	Sizing Method	Angle (deg)	Reference Cal. Sheet	Set-Up / File Name
1	45° SHEAR			
2	60° SHEAR			
3	AATT			
4	DUAL 0°			

INDICATION INFORMATION

Ind.	Method	Weld Side	Depth R. Lig.	Max. Amp.	L1 (in)	Length (in)	L2 (in)	W1 (in)	Width (in)	W2 (in)	Indication Type

Remarks:

No crack like indications

[N1] See Attached Letter From J. B. Elder

Examiner: W. H. Nelson	Examiner:	Analyst: W. H. Nelson	Reviewer: J. B. Elder
WH Nel		WH Nel	[N1]
Level: III Date: 11/08/04	Date:	Level: III Date: 11/12/04	Level: III Date:

COGEMA-SVUT-INS-007.3, Rev. 2, Attachment 5 *Rev. Dec. 03, 2003*

AUTOMATED ULTRASONIC THICKNESS DATA REPORT	Job # 04-41	Riser # 30

Location: 200 EAST TANK FARM	Exam Start: 11/08/04 0750	Exam End: 1915
Component ID: 106-AP	Examination Surface: ☒ OD ☐ ID ☐ PAINTED	Nominal Thickness: .750"
Configuration: PLATE TO PLATE	Calibrated Range: .3" TO 1.0"	Temp: AMB °F
Total Length Examined: 11.8" / Scan Width: 11.4"	Ref. Level Correction (Trans. Corr.): 0 DB	
Procedure: COGEMA SVUT-INS-007.3 / Rev 2	Material Type: ☐ SS ☒ CS OTHER:	Condition: N/A
File Name: VERT.WELD/PLATE4B	Transducer: ☒ DUAL ☐ SGL ☒ 0 DEG ☐ ANGLE: °	
X_o Ref. Point (L_o): 4B started @ end of 4A		
Y_o Ref. Point (W_o): Center line of vert. weld		

Part # / Indication	X Start (in)	X Stop (in)	Y Start (in)	Y Stop (in)	Ave. Thk. (in)	Min. Thk., R. Lig. (in)	Area Reportable	Max. Thk. (in)
0-11.8					.755"	.735"		.775"

Remarks:

[N1] See Attached Letter From J. B. Elder

Examiner: W. H. Nelson	Examiner:	Analyst: W. H. Nelson	Reviewer: J. B. Elder
WHNelson		WHNelson	[N1]
Level: III Date: 11/08/04	Date:	Level: III Date: 11/12/04	Level: III Date:

COGEMA-SVUT-INS-007.3, Rev. 2, Attachment 6 *Rev. Dec. 03, 2003*

AUTOMATED ULTRASONIC P-SCAN DATA REPORT		Job # 04-41	Riser # 30
Location: 200 EAST TANK FARM	System: PSP-4	Exam Start: 11/08/04 0736	Exam End: 1920
Component ID: 106-AP		Examination Surface: ☒ OD ☐ ID ☐ PAINTED	Nominal Thickness: 0.7500"
Configuration: PLATE TO PLATE		Calibrated Range: 0" TO 3"	Temp: AMB °F
Total Length Examined: 9.4"	Scan Width: 10.8"	Ref. Level Correction (Trans. Corr): 0 DB	
Procedure: COGEMA SVUT-INS-007.3	Rev. 2	Material Type: ☐ SS ☒ CS OTHER:	Condition: N/A
File Name / Item #: VERT.WELD/PLATE4B		Transducer: ☐ DUAL ☒ SGL ☐ 0 DEG ☒ ANGLE: 60°	
X_O Ref. Point (L_O): 4B started @ end of 4A			
Y_O Ref. Point (W_O): Center line of vert. weld			

	Sizing Method	Angle (deg)	Reference Cal. Sheet	Set-Up / File Name
1	45° SHEAR			
2	60° SHEAR			
3	AATT			
4	DUAL 0°			

INDICATION INFORMATION

Ind.	Method	Weld Side	Depth R. Lig.	Max. Amp.	L1 (in)	Length (in)	L2 (in)	W1 (in)	Width (in)	W2 (in)	Indication Type

Remarks:

No crack like indications

[N1] See Attached Letter From J. B. Elder

Examiner: W. H. Nelson	Examiner:	Analyst: W. H. Nelson	Reviewer: J. B. Elder
WH Nelson		WH Nelson	[N1]
Level: III Date: 11/08/04	Date:	Level: III Date: 11/12/04	Level: III Date:

COGEMA-SVUT-INS-007.3, Rev. 2, Attachment 5 *Rev. Dec. 03, 2003*

AUTOMATED ULTRASONIC THICKNESS DATA REPORT	Job # 04-41	Riser # 30

Location: 200 EAST TANK FARM	Exam Start: 11/08/04 0750	Exam End: 1915
Component ID: 106-AP	Examination Surface: ☒ OD ☐ ID ☐ PAINTED	Nominal Thickness: .875"
Configuration: PLATE TO PLATE	Calibrated Range: .3" TO 1.0"	Temp: AMB °F
Total Length Examined: 20.3" / Scan Width: 11"	Ref. Level Correction (Trans. Corr.): 0 DB	
Procedure: COGEMA SVUT-INS-007.3 / Rev 2	Material Type: ☐ SS ☒ CS OTHER:	Condition: N/A
File Name: VERT.WELD/PLATE5	Transducer: ☒ DUAL ☐ SGL ☒ 0 DEG ☐ ANGLE: °	
X_O Ref. Point (L_O): started 1" below horiz. weld		
Y_O Ref. Point (W_O): Center line of vert. weld		

Part # / Indication	X Start (in)	X Stop (in)	Y Start (in)	Y Stop (in)	Ave. Thk. (in)	Min. Thk., R. Lig. (in)	Area Reportable	Max. Thk. (in)
0-12					.865"	.849"		.875"
12-20.3					.865"	.848"		.875"

Remarks:

[N1] See Attached Letter From J. B. Elder

Examiner: W. H. Nelson	Examiner:	Analyst: W. H. Nelson	Reviewer: J. B. Elder
WH Nelson		WH Nelson	[N1]
Level: III Date: 11/08/04	Date:	Level: III Date: 11/12/04	Level: III Date:

COGEMA-SVUT-INS-007.3, Rev. 2, Attachment 6 *Rev. Dec. 03, 2003*

AUTOMATED ULTRASONIC P-SCAN DATA REPORT		Job # 04-41	Riser # 30
Location: 200 EAST TANK FARM	System: PSP-4	Exam Start: 11/08/04 0736	Exam End: 1920
Component ID: 106-AP		Examination Surface: ☒ OD ☐ ID ☐ PAINTED	Nominal Thickness: 0.8750"
Configuration: PLATE TO PLATE		Calibrated Range: 0" TO 3.5"	Temp: AMB °F
Total Length Examined: 17.9"	Scan Width: 10.4"	Ref. Level Correction (Trans. Corr): 0 DB	
Procedure: COGEMA SVUT-INS-007.3	Rev. 2	Material Type: ☐ SS ☒ CS OTHER:	Condition: N/A
File Name / Item #: VERT.WELD/PLATE5		Transducer: ☐ DUAL ☒ SGL ☐ 0 DEG ☒ ANGLE: 60°	
X_o Ref. Point (L_o): started 1" below horiz. weld			
Y_o Ref. Point (W_o): Center line of vert. weld			

Sizing Method	Angle (deg)	Reference Cal. Sheet	Set-Up / File Name
1 45° SHEAR			
2 60° SHEAR			
3 AATT			
4 DUAL 0°			

INDICATION INFORMATION

Ind.	Method	Weld Side	Depth R. Lig.	Max. Amp.	L1 (in)	Length (in)	L2 (in)	W1 (in)	Width (in)	W2 (in)	Indication Type

Remarks:

No crack like indications

[N1] See Attached Letter From J. B. Elder

Examiner: W. H. Nelson	Examiner:	Analyst: W. H. Nelson	Reviewer: J. B. Elder
W H Nelson		W H Nelson	[N1]
Level: III Date: 11/08/04	Date:	Level: III Date: 11/12/04	Level: III Date:

COGEMA-SVUT-INS-007.3, Rev. 2, Attachment 5 — Rev. Dec. 03, 2003

AUTOMATED ULTRASONIC P-SCAN DATA REPORT		Job # 04-41	Riser # 30
Location: 200 EAST TANK FARM	System: PSP-4	Exam Start: 11/08/04 1450	Exam End: 2010
Component ID: 106-AP		Examination Surface: ☒ OD ☐ ID ☐ PAINTED	Nominal Thickness: 0.5000"
Configuration: PLATE TO PLATE		Calibrated Range: 0" TO 1.414"	Temp: AMB °F
Total Length Examined: 88.3"	Scan Width: 5.9"	Ref. Level Correction (Trans. Corr): 0 DB	
Procedure: COGEMA SVUT-INS-007.3	Rev. 2	Material Type: ☐ SS ☒ CS OTHER:	Condition: N/A
File Name / Item #: VERT.WELD/2ND/PLATE2		Transducer: ☐ DUAL ☒ SGL ☐ 0 DEG ☒ ANGLE: 45°	
X_O Ref. Point (L_O): Started 1" below horiz. weld			
Y_O Ref. Point (W_O): center line of vert. weld			

	Sizing Method	Angle (deg)	Reference Cal. Sheet	Set-Up / File Name
1	45° SHEAR			
2	60° SHEAR			
3	AATT			
4	DUAL 0°			

INDICATION INFORMATION

Ind.	Method	Weld Side	Depth R. Lig.	Max. Amp.	L1 (in)	Length (in)	L2 (in)	W1 (in)	Width (in)	W2 (in)	Indication Type

Remarks:

No crack like indications

[N1] See Attached Letter From J. B. Elder

Examiner: W. H. Nelson	Examiner:	Analyst: W. H. Nelson	Reviewer: J. B. Elder
WHNelson		WHNelson	[N1]
Level: III Date: 11/08/04	Date:	Level: III Date: 11/09/04	Level: III Date:

COGEMA-SVUT-INS-007.3, Rev. 2, Attachment 5 — Rev. Dec. 03, 2003

AUTOMATED ULTRASONIC P-SCAN DATA REPORT		Job # 04-41	Riser # 30
Location: 200 EAST TANK FARM	System: PSP-4	Exam Start: 11/10/04 0955	Exam End: 2011
Component ID: 106-AP		Examination Surface: ☒ OD ☐ ID ☐ PAINTED	Nominal Thickness: .5625 ~~0.5620"~~ WDN 12/10/04
Configuration: PLATE TO PLATE		Calibrated Range: 0" TO 2.2"	Temp: AMB °F
Total Length Examined: 88.7"	Scan Width: 5.6"	Ref. Level Correction (Trans. Corr): 0 DB	
Procedure: COGEMA SVUT-INS-007.3	Rev. 2	Material Type: ☐ SS ☒ CS OTHER:	Condition: N/A
File Name / Item #: VERT.WELD/2ND/PLATE3		Transducer: ☐ DUAL ☒ SGL ☐ 0 DEG ☒ ANGLE: 45°	
X_O Ref. Point (L_O): Started 1" below horiz. weld			
Y_O Ref. Point (W_O): center line of vert. weld			

	Sizing Method	Angle (deg)	Reference Cal. Sheet	Set-Up / File Name
1	45° SHEAR			
2	60° SHEAR			
3	AATT			
4	DUAL 0°			

INDICATION INFORMATION

Ind.	Method	Weld Side	Depth R. Lig.	Max. Amp.	L1 (in)	Length (in)	L2 (in)	W1 (in)	Width (in)	W2 (in)	Indication Type

Remarks:

No crack like indications

[N1] See Attached Letter From J. B. Elder

Examiner: W. H. Nelson	Examiner:	Analyst: W. H. Nelson	Reviewer: J. B. Elder
Level: III Date: 11/10/04	Date:	Level: III Date: 12/02/04	[N1] Level: III Date:

COGEMA-SVUT-INS-007.3, Rev. 2, Attachment 5 — Rev. Dec. 03, 2003

AUTOMATED ULTRASONIC P-SCAN DATA REPORT		Job # 04-41	Riser # 30
Location: 200 EAST TANK FARM	System: PSP-4	Exam Start: 11/08/04 1450	Exam End: 2010
Component ID: 106-AP		Examination Surface: ☒ OD ☐ ID ☐ PAINTED	Nominal Thickness: 0.7500"
Configuration: PLATE TO PLATE		Calibrated Range: 0" TO 2.12"	Temp: AMB °F
Total Length Examined: 43.5"	Scan Width: 6.2"	Ref. Level Correction (Trans. Corr): 0 DB	
Procedure: COGEMA SVUT-INS-007.3	Rev. 2	Material Type: ☐ SS ☒ CS OTHER:	Condition: N/A
File Name / Item #: VERT.WELD/2ND/PLATE4		Transducer: ☐ DUAL ☒ SGL ☐ 0 DEG ☒ ANGLE: 45°	
X_o Ref. Point (L_o): Started 1" below horiz. weld			
Y_o Ref. Point (W_o): center line of vert. weld			

	Sizing Method	Angle (deg)	Reference Cal. Sheet	Set-Up / File Name
1	45° SHEAR			
2	60° SHEAR			
3	AATT			
4	DUAL 0°			

INDICATION INFORMATION

Ind.	Method	Weld Side	Depth R. Lig.	Max. Amp.	L1 (in)	Length (in)	L2 (in)	W1 (in)	Width (in)	W2 (in)	Indication Type

Remarks:
No crack like indications

[N1] See Attached Letter From J. B. Elder

Examiner: W. H. Nelson	Examiner:	Analyst: W. H. Nelson	Reviewer: J. B. Elder
WH Nelson		WH Nelson	[N1]
Level: III Date: 11/08/04	Date:	Level: III Date: 11/09/04	Level: III Date:

COGEMA-SVUT-INS-007.3, Rev. 2, Attachment 5 Rev. Dec. 03, 2003

AUTOMATED ULTRASONIC P-SCAN DATA REPORT		Job # 04-41	Riser # 30
Location: 200 EAST TANK FARM	System: PSP-4	Exam Start: 11/08/04 1450	Exam End: 2010
Component ID: 106-AP		Examination Surface: ☒ OD ☐ ID ☐ PAINTED	Nominal Thickness: 0.7500"
Configuration: PLATE TO PLATE		Calibrated Range: 0" TO 2.12"	Temp: AMB °F
Total Length Examined: 63"	Scan Width: 6.2"	Ref. Level Correction (Trans. Corr): 0 DB	
Procedure: COGEMA SVUT-INS-007.3	Rev. 2	Material Type: ☐ SS ☒ CS OTHER:	Condition: N/A
File Name / Item #: VERT.WELD/2ND/PLATE4A		Transducer: ☐ DUAL ☒ SGL ☐ 0 DEG ☒ ANGLE: 45°	
X_o Ref. Point (L_o): 4A started @ 40.9" of 4			
Y_o Ref. Point (W_o): center line of vert. weld			

	Sizing Method	Angle (deg)	Reference Cal. Sheet	Set-Up / File Name
1	45° SHEAR			
2	60° SHEAR			
3	AATT			
4	DUAL 0°			

INDICATION INFORMATION

Ind.	Method	Weld Side	Depth R. Lig.	Max. Amp.	L1 (in)	Length (in)	L2 (in)	W1 (in)	Width (in)	W2 (in)	Indication Type

Remarks:

No crack like indications

[N1] See Attached Letter From J. B. Elder

Examiner: W. H. Nelson	Examiner:	Analyst: W. H. Nelson	Reviewer: J. B. Elder
WHNelson		WHNelson	[N1]
Level: III Date: 11/08/04	Date:	Level: III Date: 11/09/04	Level: III Date:

COGEMA-SVUT-INS-007.3, Rev. 2, Attachment 5 *Rev. Dec. 03, 2003*

AUTOMATED ULTRASONIC P-SCAN DATA REPORT			Job # 04-41	Riser # 30
Location: 200 EAST TANK FARM	System: PSP-4	Exam Start: 11/08/04 1450		Exam End: 2010
Component ID: 106-AP		Examination Surface: ☒ OD ☐ ID ☐ PAINTED		Nominal Thickness: 0.8750"
Configuration: PLATE TO PLATE		Calibrated Range: 0" TO 2.47"		Temp: AMB °F
Total Length Examined: 19.8"	Scan Width: 5.3"	Ref. Level Correction (Trans. Corr): 0 DB		
Procedure: COGEMA SVUT-INS-007.3	Rev. 2	Material Type: ☐ SS ☒ CS OTHER:		Condition: N/A
File Name / Item #: VERT.WELD/2ND/PLATE5		Transducer: ☐ DUAL ☒ SGL ☐ 0 DEG ☒ ANGLE: 45°		
X_O Ref. Point (L_O): Stated 1" below horiz. weld				
Y_O Ref. Point (W_O): center line of vert. weld				

	Sizing Method	Angle (deg)	Reference Cal. Sheet	Set-Up / File Name
1	45° SHEAR			
2	60° SHEAR			
3	AATT			
4	DUAL 0°			

INDICATION INFORMATION

Ind.	Method	Weld Side	Depth R. Lig.	Max. Amp.	L1 (in)	Length (in)	L2 (in)	W1 (in)	Width (in)	W2 (in)	Indication Type

Remarks:
No crack like indications

[N1] See Attached Letter From J. B. Elder

Examiner: W. H. Nelson	Examiner:	Analyst: W. H. Nelson	Reviewer: J. B. Elder
WH Nelson		WH Nelson	[N1]
Level: III Date: 11/08/04	Date:	Level: III Date: 11/09/04	Level: III Date:

COGEMA-SVUT-INS-007.3, Rev. 2, Attachment 5 Rev. Dec. 03, 2003

AUTOMATED ULTRASONIC THICKNESS DATA REPORT	Job # 04-41	Riser # 30

Location: 200 EAST TANK FARM	Exam Start: 11/10/04 0847	Exam End: 2211
Component ID: 106-AP	Examination Surface: ☒ OD ☐ ID ☐ PAINTED	Nominal Thickness: .875"
Configuration: PLATE TO KNUCKLE	Calibrated Range: .3" TO 1.0"	Temp: AMB °F
Total Length Examined: 120" / Scan Width: 9.7"	Ref. Level Correction (Trans. Corr.): 0 DB	
Procedure: COGEMA SVUT-INS-007.3 / Rev 2	Material Type: ☐ SS ☒ CS OTHER:	Condition: N/A
File Name: HORIZ.WELD/PLATE/KNUCKLE	Transducer: ☒ DUAL ☐ SGL ☒ 0 DEG ☐ ANGLE: °	
X_O Ref. Point (L_O): started @ knuckle side vert. weld /south of 24" riser/north of south air line		
Y_O Ref. Point (W_O): Center line of horiz. weld		

Part # / Indication	X Start (in)	X Stop (in)	Y Start (in)	Y Stop (in)	Ave. Thk. (in)	Min. Thk., R. Lig. (in)	Area Reportable	Max. Thk. (in)
0-12					.865"	.852"		.875"
12-24					.865"	.852"		.875"
24-36					.865"	.853"		.875"
36-48					.865"	.852"		.875"
48-60					.865"	.857"		.875"
60-72					.865"	.860"		.875"
72-84					.865"	.861"		.875"
84-96					.865"	.861"		.875"
96-108					.865"	.850"		.875"
108-120					.865"	.861"		.875"

Remarks:
Plate side

[N1] See Attached Letter From J. B. Elder

Examiner: W. H. Nelson	Examiner:	Analyst: W. H. Nelson	Reviewer: J. B. Elder
WHNel		WHNel	[N1]
Level: III Date: 11/10/04	Date:	Level: III Date: 11/13/04	Level: III Date:

COGEMA-SVUT-INS-007.3, Rev. 2, Attachment 6 *Rev. Dec. 03, 2003*

AUTOMATED ULTRASONIC THICKNESS DATA REPORT	Job # 04-41	Riser # 30

Location: 200 EAST TANK FARM	Exam Start: 11/10/04 0847	Exam End: 2211
Component ID: 106-AP	Examination Surface: ☒ OD ☐ ID ☐ PAINTED	Nominal Thickness: .875"
Configuration: PLATE TO KNUCKLE	Calibrated Range: .3" TO 1.0"	Temp: AMB °F
Total Length Examined: 60.5" / Scan Width: 9.7"	Ref. Level Correction (Trans. Corr.): 0 DB	
Procedure: COGEMA SVUT-INS-007.3 / Rev 2	Material Type: ☐ SS ☒ CS OTHER:	Condition: N/A
File Name: HORIZ.WELD/PLATE/KNUCKLE A	Transducer: ☒ DUAL ☐ SGL ☒ 0 DEG ☐ ANGLE: °	
X_O Ref. Point (L_O): knuckle A started @ end of knuckle		
Y_O Ref. Point (W_O): Center line of horiz. weld		

Part # / Indication	X Start (in)	X Stop (in)	Y Start (in)	Y Stop (in)	Ave. Thk. (in)	Min. Thk., R. Lig. (in)	Area Reportable	Max. Thk. (in)
0-12					.865"	.861"		.870"
12-24					.865"	.842"		.870"
24-36					.865"	.852"		.870"
36-48					.865"	.861"		.870"
48-60.5					.865"	.852"		.870"

Remarks:
Plate side

[N1] See Attached Letter From J. B. Elder

Examiner: W. H. Nelson	Examiner:	Analyst: W. H. Nelson	Reviewer: J. B. Elder
Level: III Date: 11/10/04	Date:	Level: III Date: 11/13/04	[N1] Level: III Date:

COGEMA-SVUT-INS-007.3, Rev. 2, Attachment 6 *Rev. Dec. 03, 2003*

AUTOMATED ULTRASONIC THICKNESS DATA REPORT	Job # 04-41	Riser # 30

Location: 200 EAST TANK FARM	Exam Start: 11/10/04 0847	Exam End: 2211
Component ID: 106-AP	Examination Surface: ☒ OD ☐ ID ☐ PAINTED	Nominal Thickness: .875"
Configuration: PLATE TO KNUCKLE	Calibrated Range: .3" TO 1.0"	Temp: AMB °F
Total Length Examined: 72" / Scan Width: 9.7"	Ref. Level Correction (Trans. Corr.): 0 DB	
Procedure: COGEMA SVUT-INS-007.3 / Rev 2	Material Type: ☐ SS ☒ CS OTHER:	Condition: N/A
File Name: HORIZ.WELD/PLATE/KNUCKLE B	Transducer: ☒ DUAL ☐ SGL ☒ 0 DEG ☐ ANGLE: °	
X_O Ref. Point (L_O): knuckle B started @ end of knuckle A		
Y_O Ref. Point (W_O): Center line of horiz. weld		

Part # / Indication	X Start (in)	X Stop (in)	Y Start (in)	Y Stop (in)	Ave. Thk. (in)	Min. Thk., R. Lig. (in)	Area Reportable	Max. Thk. (in)
0-12					.865"	.851"		.870"
12-24					.865"	.852"		.870"
24-36					.865"	.846"		.870"
36-48					.865"	.856"		.870"
48-60					.860"	.825"		.865"
60-72					.855"	.832"		.865"

Remarks:
Plate side

[N1] See Attached Letter From J. B. Elder

Examiner: W. H. Nelson	Examiner:	Analyst: W. H. Nelson	Reviewer: J. B. Elder
WH Nelson		WH Nelson	[N1]
Level: III Date: 11/10/04	Date:	Level: III Date: 11/13/04	Level: III Date:

COGEMA-SVUT-INS-007.3, Rev. 2, Attachment 6 — Rev. Dec. 03, 2003

AUTOMATED ULTRASONIC THICKNESS DATA REPORT	Job # 04-41	Riser # 30

Location: 200 EAST TANK FARM	Exam Start: 11/10/04 0851	Exam End: 2214
Component ID: 106-AP	Examination Surface: ☒ OD ☐ ID ☐ PAINTED	Nominal Thickness: .9375"
Configuration: PLATE TO KNUCKLE	Calibrated Range: .3" TO 1.0"	Temp: AMB °F
Total Length Examined: 120" / Scan Width: 9.7"	Ref. Level Correction (Trans. Corr.): 0 DB	
Procedure: COGEMA SVUT-INS-007.3 / Rev 2	Material Type: ☐ SS ☒ CS OTHER:	Condition: N/A
File Name: HORIZ.WELD/PLATE/KNUCKLE	Transducer: ☒ DUAL ☐ SGL ☒ 0 DEG ☐ ANGLE: °	
X_O Ref. Point (L_O): started @ knuckle side vert. weld /south of 24" riser/north of south air line		
Y_O Ref. Point (W_O): Center line of horiz. weld		

Part # / Indication	X Start (in)	X Stop (in)	Y Start (in)	Y Stop (in)	Ave. Thk. (in)	Min. Thk., R. Lig. (in)	Area Reportable	Max. Thk. (in)
0-12					.945"	.939"		.955"
12-24					.945"	.933"		.955"
24-36					.945"	.920"		.955"
36-48					.945"	.936"		.955"
48-60					.945"	.926"		.955"
60-72					.945"	.921"		.955"
72-84					.940"	.935"		.950"
84-96					.940"	.929"		.950"
96-108					.940"	.919"		.950"
108-120					.940"	.926"		.950"

Remarks:
Knuckle side

[N1] See Attached Letter From J. B. Elder

Examiner: W. H. Nelson	Examiner:	Analyst: W. H. Nelson	Reviewer: J. B. Elder
Level: III Date: 11/10/04	Date:	Level: III Date: 11/13/04	[N1] Level: III Date:

COGEMA-SVUT-INS-007.3, Rev. 2, Attachment 6 — Rev. Dec. 03, 2003

AUTOMATED ULTRASONIC THICKNESS DATA REPORT	Job # 04-41	Riser # 30

Location: 200 EAST TANK FARM	Exam Start: 11/10/04 0851	Exam End: 2214
Component ID: 106-AP	Examination Surface: ☒ OD ☐ ID ☐ PAINTED	Nominal Thickness: .9375"
Configuration: PLATE TO KNUCKLE	Calibrated Range: .3" TO 1.0"	Temp: AMB °F
Total Length Examined: 60.5" / Scan Width: 9.7"	Ref. Level Correction (Trans. Corr.): 0 DB	
Procedure: COGEMA SVUT-INS-007.3 / Rev 2	Material Type: ☐ SS ☒ CS OTHER:	Condition: N/A
File Name: HORIZ.WELD/PLATE/KNUCKLE A	Transducer: ☒ DUAL ☐ SGL ☒ 0 DEG ☐ ANGLE: °	
X_O Ref. Point (L_O): knuckle A started @ end of knuckle		
Y_O Ref. Point (W_O): Center line of horiz. weld		

Part # / Indication	X Start (in)	X Stop (in)	Y Start (in)	Y Stop (in)	Ave. Thk. (in)	Min. Thk., R. Lig. (in)	Area Reportable	Max. Thk. (in)
0-12					.940"	.933"		.950"
12-24					.940"	.911"		.950"
24-36					.940"	.923"		.950"
36-48					.940"	.930"		.950"
48-60.5					.940"	.912"		.950"

Remarks:
Knuckle side

[N1] See Attached Letter From J. B. Elder

Examiner: W. H. Nelson	Examiner:	Analyst: W. H. Nelson	Reviewer: J. B. Elder
WH Nelson		WH Nelson	[N1]
Level: III Date: 11/10/04	Date:	Level: III Date: 11/13/04	Level: III Date:

COGEMA-SVUT-INS-007.3, Rev. 2, Attachment 6 — Rev. Dec. 03, 2003

AUTOMATED ULTRASONIC THICKNESS DATA REPORT	Job # 04-41	Riser # 30

Location: 200 EAST TANK FARM	Exam Start: 11/10/04 0851	Exam End: 2214
Component ID: 106-AP	Examination Surface: ☒ OD ☐ ID ☐ PAINTED	Nominal Thickness: .9375"
Configuration: PLATE TO KNUCKLE	Calibrated Range: .3" TO 1.0"	Temp: AMB °F
Total Length Examined: 72" / Scan Width: 9.7"	Ref. Level Correction (Trans. Corr.): 0 DB	
Procedure: COGEMA SVUT-INS-007.3 / Rev 2	Material Type: ☐ SS ☒ CS OTHER:	Condition: N/A
File Name: HORIZ.WELD/PLATE/KNUCKLE B	Transducer: ☒ DUAL ☐ SGL ☒ 0 DEG ☐ ANGLE: °	
X_o Ref. Point (L_o): knuckle B started @ end of knuckle A		
Y_o Ref. Point (W_o): Center line of horiz. weld		

Part # / Indication	X Start (in)	X Stop (in)	Y Start (in)	Y Stop (in)	Ave. Thk. (in)	Min. Thk., R. Lig. (in)	Area Reportable	Max. Thk. (in)
0-12					.935"	.922"		.945"
12-24					.930"	.924"		.940"
24-36					.930"	.908"		.940"
36-48					.925"	.904"		.935"
48-60					.925"	.910"		.935"
60-72					.935"	.924"		.945"

Remarks:
Knuckle side

[N1] See Attached Letter From J. B. Elder

Examiner: W. H. Nelson	Examiner:	Analyst: W. H. Nelson	Reviewer: J. B. Elder
WH Nelson		WH Nelson	[N1]
Level: III Date: 11/10/04	Date:	Level: III Date: 11/13/04	Level: III Date:

COGEMA-SVUT-INS-007.3, Rev. 2, Attachment 6 — Rev. Dec. 03, 2003

AUTOMATED ULTRASONIC P-SCAN DATA REPORT		Job # 04-41	Riser # 30
Location: 200 EAST TANK FARM	System: PSP-4	Exam Start: 11/11/04 0910	Exam End: 1454
Component ID: 106-AP		Examination Surface: ☒ OD ☐ ID ☐ PAINTED	Nominal Thickness: 0.9370"
Configuration: PLATE TO ~~KNUKLE~~ KNUCKLE (CWSN 12/10/04)		Calibrated Range: 0" TO 3.75"	Temp: AMB °F
Total Length Examined: 120"	Scan Width: 7.5"	Ref. Level Correction (Trans. Corr): 0 DB	
Procedure: COGEMA SVUT-INS-007.3	Rev. 2	Material Type: ☐ SS ☒ CS OTHER:	Condition: N/A
File Name / Item #: HORIZ.WELD/60/PLATE/KNUCKLE		Transducer: ☐ DUAL ☒ SGL ☐ 0 DEG ☒ ANGLE: 60°	
X_O Ref. Point (L_O): Started @ first air slot north air line, south of 24" riser			
Y_O Ref. Point (W_O): Center line of horiz. weld			

	Sizing Method	Angle (deg)	Reference Cal. Sheet	Set-Up / File Name
1	45° SHEAR			
2	60° SHEAR			
3	AATT			
4	DUAL 0°			

INDICATION INFORMATION

Ind.	Method	Weld Side	Depth R. Lig.	Max. Amp.	L1 (in)	Length (in)	L2 (in)	W1 (in)	Width (in)	W2 (in)	Indication Type

Remarks:

No crack like indications

[N1] See Attached Letter From J. B. Elder

Examiner: W. H. Nelson	Examiner:	Analyst: W. H. Nelson	Reviewer: J. B. Elder
(WH) Nelson		(WH) Nelson	[N1]
Level: III Date: 11/11/04	Date:	Level: III Date: 11/21/04	Level: III Date:

COGEMA-SVUT-INS-007.3, Rev. 2, Attachment 5 Rev. Dec. 03, 2003

AUTOMATED ULTRASONIC P-SCAN DATA REPORT		Job # 04-41	Riser # 30
Location: 200 EAST TANK FARM	System: PSP-4	Exam Start: 11/11/04 0910	Exam End: 1454
Component ID: 106-AP		Examination Surface: ☒ OD ☐ ID ☐ PAINTED	Nominal Thickness: 0.9370"
Configuration: PLATE TO ~~KNUKLE~~ KNUCKLE (WHN 12/10/04)		Calibrated Range: 0" TO 3.75"	Temp: AMB °F
Total Length Examined: 120"	Scan Width: 7.7"	Ref. Level Correction (Trans. Corr): 0 DB	
Procedure: COGEMA SVUT-INS-007.3	Rev. 2	Material Type: ☐ SS ☒ CS OTHER:	Condition: N/A
File Name / Item #: HORIZ.WELD/60/PLATE/KNUCKLE A		Transducer: ☐ DUAL ☒ SGL ☐ 0 DEG ☒ ANGLE: 60°	
X_0 Ref. Point (L_0): KnuckleA started @ end of Knuckle			
Y_0 Ref. Point (W_0): Center line of horiz. weld			

	Sizing Method	Angle (deg)	Reference Cal. Sheet	Set-Up / File Name
1	45° SHEAR			
2	60° SHEAR			
3	AATT			
4	DUAL 0°			

INDICATION INFORMATION

Ind.	Method	Weld Side	Depth R. Lig.	Max. Amp.	L1 (in)	Length (in)	L2 (in)	W1 (in)	Width (in)	W2 (in)	Indication Type

Remarks:
No crack like indications

[N1] See Attached Letter From J. B. Elder

Examiner: W. H. Nelson	Examiner:	Analyst: W. H. Nelson	Reviewer: J. B. Elder
WH Nelson		WH Nelson	[N1]
Level: III Date: 11/11/04	Date:	Level: III Date: 11/21/04	Level: III Date:

COGEMA-SVUT-INS-007.3, Rev. 2, Attachment 5 Rev. Dec. 03, 2003

AUTOMATED ULTRASONIC P-SCAN DATA REPORT		Job # 04-41	Riser # 30
Location: 200 EAST TANK FARM	System: PSP-4	Exam Start: 11/10/04 0955	Exam End: 2011
Component ID: 106-AP		Examination Surface: ☒ OD ☐ ID ☐ PAINTED	Nominal Thickness: 0.9370"
Configuration: PLATE TO ~~KNUKLE~~ KNUCKLE		Calibrated Range: 0" TO 2.65"	Temp: AMB °F
Total Length Examined: 120"	Scan Width: 5.6"	Ref. Level Correction (Trans. Corr): 0 DB	
Procedure: COGEMA SVUT-INS-007.3	Rev. 2	Material Type: ☐ SS ☒ CS OTHER:	Condition: N/A
File Name / Item #: HORIZ.WELD/2ND/PLATE/KNUCKLE		Transducer: ☐ DUAL ☒ SGL ☐ 0 DEG ☒ ANGLE: 45°	
X_o Ref. Point (L_o): Started @ first air slot north of south air line, south of 24" riser			
Y_o Ref. Point (W_o): Center line of horiz. weld			

	Sizing Method	Angle (deg)	Reference Cal. Sheet	Set-Up / File Name
1	45° SHEAR			
2	60° SHEAR			
3	AATT			
4	DUAL 0°			

INDICATION INFORMATION

Ind.	Method	Weld Side	Depth R. Lig.	Max. Amp.	L1 (in)	Length (in)	L2 (in)	W1 (in)	Width (in)	W2 (in)	Indication Type

Remarks:
No crack like indications

[N1] See Attached Letter From J. B. Elder

Examiner: W. H. Nelson	Examiner:	Analyst: W. H. Nelson	Reviewer: J. B. Elder
WH Nelson		WH Nelson	[N1]
Level: III Date: 11/10/04	Date:	Level: III Date: 11/20/04	Level: III Date:

COGEMA-SVUT-INS-007.3, Rev. 2, Attachment 5 *Rev. Dec. 03, 2003*

AUTOMATED ULTRASONIC P-SCAN DATA REPORT		Job # 04-41	Riser # 30
Location: 200 EAST TANK FARM	System: PSP-4	Exam Start: 11/10/04 0955	Exam End: 2011
Component ID: 106-AP		Examination Surface: ☒ OD ☐ ID ☐ PAINTED	Nominal Thickness: 0.9370"
Configuration: PLATE TO ~~KNUCKLE~~ KNUCKLE		Calibrated Range: 0" TO 2.65"	Temp: AMB °F
Total Length Examined: 120"	Scan Width: 5.6"	Ref. Level Correction (Trans. Corr): 0 DB	
Procedure: COGEMA SVUT-INS-007.3	Rev. 2	Material Type: ☐ SS ☒ CS OTHER:	Condition: N/A
File Name / Item #: HORIZ.WELD/2ND/PLATE/KNUCKLE A		Transducer: ☐ DUAL ☒ SGL ☐ 0 DEG ☒ ANGLE: 45°	
X_o Ref. Point (L_o): KnuckleA started @ end of knuckle			
Y_o Ref. Point (W_o): Center line of horiz. weld			

	Sizing Method	Angle (deg)	Reference Cal. Sheet	Set-Up / File Name
1	45° SHEAR			
2	60° SHEAR			
3	AATT			
4	DUAL 0°			

INDICATION INFORMATION

Ind.	Method	Weld Side	Depth R. Lig.	Max. Amp.	L1 (in)	Length (in)	L2 (in)	W1 (in)	Width (in)	W2 (in)	Indication Type

Remarks:

No crack like indications

[N1] See Attached Letter From J. B. Elder

Examiner: W. H. Nelson	Examiner:	Analyst: W. H. Nelson	Reviewer: J. B. Elder
(WH) Nelson		(WH) Nelson	[N1]
Level: III Date: 11/10/04	Date:	Level: III Date: 11/20/04	Level: III Date:

COGEMA-SVUT-INS-007.3, Rev. 2, Attachment 5 — Rev. Dec. 03, 2003

AUTOMATED ULTRASONIC THICKNESS CALIBRATION SHEET			Job # 04-41	Riser # 30
Location: 200 EAST TANK FARM	System: 106-AP		Calibration Block: 444-99-30-004	
Procedure: COGEMA SVUT-INS-007.3	Rev. 2		Thickness: 0.3" to 1.0"	Material: Carbon Steel
UT System: PSP-4	Serial No. 206/209		Reference Block: N/A	
Software Version: P-SCAN Sys. 4 1.3	Rev. 2		Thickness: N/A	Material: N/A
Linearity Due Date: 11/30/2004			Reference Block Temp: AMB °F	
Scanner Type: AWS-5d	Serial No. 309		Couplant: Water	Batch No. N/A
Scanner Cable: COAXIAL			Cable Length: 80 Feet	
Signal Cable: COAXIAL			Cable Length: 80 Feet	

Channel	Transducer Make	Model	Freq. (MHz)	Size	Serial No.	Angle (deg)	Wedge Type
1	KB	MSEB	5	8x2MM	01933	0	
2							
3							
4							

INITIAL CALIBRATION			CALIBRATION CHECKS						
DATE:		10/14/04	10/14/04	10/18/04	10/18/04	10/19/04	10/19/04	10/21/04	10/21/04
TIME:		0746	2134	0911	1743	1003	1446	0909	2005
REFLECTOR:		.3"-1.0"	.3"-1.0"	.3"-1.0"	.3"-1.0"	.3"-1.0"	.3"-1.0"	.3"-1.0"	.3"-1.0"
CH. 1	THK. 1	.303"	.303"	.303"	.299"	.299"	.299"	.302"	.302"
	THK. 2	1.00"/0db	1.00"/-1db	1.00"/0db	.999"/-1db	1.00"/0db	.996"/0db	1.00"/0db	1.00"/1db
CH. 2	THK. 1	.299"	.299"	.299"	.298"	.303"	.299"	.299"	.295"
	THK. 2	1.00"/0db	1.00"/-1db	1.00"/0db	.999"/-1db	1.00"/0db	.996"/0db	1.00"/0db	.997"/-1db
CH. 3	THK. 1	.299"	.299"	.298"	.298"	.299"	.299"	.299"	.295"
	THK. 2	1.00"/0db	1.00"/-1db	1.00"/0db	.999"/0db	1.00"/0db	1.00"/0db	1.00"/0db	.997"/-1db
CH. 4	THK. 1								
	THK. 2								
EXAMINER:		WHN	WHN	WHN	WHN	WHN	WHN	WHN	WHN

Remarks:
CAL.T (VERT. WALL)

Examiner: W. H. Nelson	Examiner:	Reviewer:
WH Nel		
Level: III Date: 10/14-21/04	Level: ____ Date:	Level: __ Date:

COGEMA-SVUT-INS-007.3, Rev. 2, Attachment 1 *Rev. Dec. 03, 2003*

AUTOMATED ULTRASONIC THICKNESS CALIBRATION SHEET			Job # 04-41	Riser # 30
Location: 200 EAST TANK FARM	System: 106-AP		Calibration Block: 444-99-30-004	
Procedure: COGEMA SVUT-INS-007.3	Rev. 2		Thickness: 0.3" to 1.0"	Material: Carbon Steel
UT System: PSP-4	Serial No. 206/209		Reference Block: N/A	
Software Version: P-SCAN Sys. 4 1.3	Rev. 2		Thickness: N/A	Material: N/A
Linearity Due Date: 11/30/2004			Reference Block Temp: AMB °F	
Scanner Type: AWS-5d	Serial No. 309		Couplant: Water	Batch No. N/A
Scanner Cable: COAXIAL			Cable Length: 80 Feet	
Signal Cable: COAXIAL			Cable Length: 80 Feet	

Channel	Transducer Make	Model	Freq. (MHz)	Size	Serial No.	Angle (deg)	Wedge Type
1	KB	MSEB	5	8x2MM	01933	0	
2							
3							
4							

		INITIAL CALIBRATION	CALIBRATION CHECKS						
DATE:		11/01/04	11/01/04	11/02/04	11/02/04	11/03/04	11/03/04		
TIME:		0934	2015	0729	1417	0851	1932		
REFLECTOR:		.3"-1.0"	.3"-1.0"	.3"-1.0"	.3"-1.0"	.3"-1.0"	.3"-1.0"		
CH. 1	THK. 1	.302"	.299"	.302"	.298"	.302"	.295"		
	THK. 2	1.00"/0db	.994"/-1db	1.00"/0db	.997"/-1db	1.00"/0db	.994"/-1db		
CH. 2	THK. 1	.302"	.302"	.299"	.299"	.302"	.295"		
	THK. 2	1.00"/0db	.993"/2db	1.00"/0db	.996"/1db	1.00"/0db	.996"/1db		
CH. 3	THK. 1	.302"	.295"	.302"	.299"	.299"	.295"		
	THK. 2	1.00"/0db	.997"/-1db	1.00"/0db	.997"/-1db	1.00"/0db	.994"/0db		
CH. 4	THK. 1								
	THK. 2								
EXAMINER:		WHN	WHN	WHN	WHN	WHN	WHN		

Remarks:
CAL.T1 (VERT. WALL)

Examiner: W. H. Nelson	Examiner:	Reviewer:
WH Nel		
Level: III Date: 11/1-3/04	Level: ____ Date:	Level: __ Date:

COGEMA-SVUT-INS-007.3, Rev. 2, Attachment 1 Rev. Dec. 03, 2003

AUTOMATED ULTRASONIC THICKNESS CALIBRATION SHEET			Job # 04-41	Riser # 27
Location: 200 EAST TANK FARM	System: 106-AP		Calibration Block: 444-99-30-004	
Procedure: COGEMA SVUT-INS-007.3	Rev. 2		Thickness: 0.3" to 1.0"	Material: Carbon Steel
UT System: PSP-4	Serial No. 206/209		Reference Block: N/A	
Software Version: P-SCAN Sys. 4 1.3	Rev. 2		Thickness: N/A	Material: N/A
Linearity Due Date: 11/30/2004			Reference Block Temp: AMB °F	
Scanner Type: AWS-5d	Serial No. 309		Couplant: Water	Batch No. N/A
Scanner Cable: COAXIAL			Cable Length: 80 Feet	
Signal Cable: COAXIAL			Cable Length: 80 Feet	

Channel	Transducer Make	Model	Freq. (MHz)	Size	Serial No.	Angle (deg)	Wedge Type
1	KB	MSEB	5	8x2MM	01999	0	
2	KB	MSEB	5	8x2MM	01930	0	
3							
4							

INITIAL CALIBRATION		CALIBRATION CHECKS							
DATE:		11/08/04	11/08/04	11/08/04	11/08/04	11/09/04	11/09/04	11/09/04	11/09/04
TIME:		0750	0755	1911	1915	0727	0732	1502	1505
REFLECTOR:		.3"-1.0"	.3"-1.0"	.3"-1.0"	.3"-1.0"	.3"-1.0"	.3"-1.0"	.3"-1.0"	.3"-1.0"
CH. 1	THK. 1	.299"	.299"	.299"	.299"	.299"	.303"	.295"	.303"
	THK. 2	1.00"/0db	1.00"/0db	1.004"/-2db	.996"/0db	1.00"/0db	1.00"/0db	.993"/0db	1.00"/0db
CH. 2	THK. 1	.299"	.299"	.299"	.299"	.299"	.299"	.299"	.299"
	THK. 2	1.00"/0db	1.00"/0db	1.00"/0db	1.00"/0db	1.00"/0db	1.00"/0db	.996"/1db	1.00"/0db
CH. 3	THK. 1	.299"	.299"	.303"	.299"	.299"	.299"	.299"	.295"
	THK. 2	1.00"/0db	1.00"/0db	1.00"/0db	1.00"/0db	1.00"/0db	1.00"/0db	.996"/1db	.996"/0db
CH. 4	THK. 1								
	THK. 2								
EXAMINER:		WHN	WHN	WHN	WHN	WHN	WHN	WHN	WHN

Remarks:
CAL.T3 (WELDS)

Examiner: W. H. Nelson	Examiner:	Reviewer:
WH Nel		
Level: III Date: 11/08&09/04	Level: ____ Date:	Level: ___ Date:

COGEMA-SVUT-INS-007.3, Rev. 2, Attachment 1 *Rev. Dec. 03, 2003*

AUTOMATED ULTRASONIC THICKNESS CALIBRATION SHEET			Job # 04-41	Riser # 27
Location: 200 EAST TANK FARM	System: 106-AP		Calibration Block: 444-99-30-004	
Procedure: COGEMA SVUT-INS-007.3	Rev. 2		Thickness: 0.3" to 1.0"	Material: Carbon Steel
UT System: PSP-4	Serial No. 206/209		Reference Block: N/A	
Software Version: P-SCAN Sys. 4 1.3	Rev. 2		Thickness: N/A	Material: N/A
Linearity Due Date: 11/30/2004			Reference Block Temp: AMB °F	
Scanner Type: AWS-5d	Serial No. 309		Couplant: Water	Batch No. N/A
Scanner Cable: COAXIAL			Cable Length: 80 Feet	
Signal Cable: COAXIAL			Cable Length: 80 Feet	

Channel	Transducer Make	Model	Freq. (MHz)	Size	Serial No.	Angle (deg)	Wedge Type
1	KB	MSEB	5	8x2MM	01999	0	
2	KB	MSEB	5	8x2MM	01930	0	
3							
4							

INITIAL CALIBRATION			CALIBRATION CHECKS						
DATE:		11/04/04	11/04/04	11/04/04	11/04/04	11/10/04	11/10/04	11/10/04	11/10/04
TIME:		0932	0932	1527	1530	0847	0851	2211	2214
REFLECTOR:		.3"-1.0"	.3"-1.0"	.3"-1.0"	.3"-1.0"	.3"-1.0"	.3"-1.0"	.3"-1.0"	.3"-1.0"
CH. 1	THK. 1	.303"	.299"	.299"	.299"	.299"	.299"	.295"	.299"
	THK. 2	1.00"/0db	1.00"/0db	.996"/2db	.996"/0db	1.00"/0db	1.00"/0db	.993"/1db	1.00"/0db
CH. 2	THK. 1	.303"	.299"	.295"	.299"	.299"	.299"	.299"	.299"
	THK. 2	1.00"/0db	1.00"/0db	.993"/2db	1.00"/0db	1.00"/0db	1.00"/0db	.996"/0db	1.00"/0db
CH. 3	THK. 1	.299"	.299"	.295"	.299"	.299"	.299"	.299"	.299"
	THK. 2	1.00"/0db	1.00"/0db	.993"/2db	1.00"/0db	1.00"/0db	1.00"/0db	1.00"/0db	1.00"/0db
CH. 4	THK. 1								
	THK. 2								
EXAMINER:		WHN	WHN	WHN	WHN	WHN	WHN	WHN	WHN

Remarks:
CAL.T2 (WELDS)

Examiner: W. H. Nelson	Examiner:	Reviewer:
WH Nelson		
Level: III Date: 11/04&10/04	Level: ____ Date:	Level: ___ Date:

COGEMA-SVUT-INS-007.3, Rev. 2, Attachment 1 *Rev. Dec. 03, 2003*

AUTOMATED ULTRASONIC P-SCAN CALIBRATION SHEET			Job # 04-41	Riser # 30
Location: 200 EAST TANK FARM	System: 106-AP		Calibration Block: 444-99-30-004	
Procedure: COGEMA SVUT-INS-007.3		Rev. 2	Thickness: 1.0"	Material: Carbon Steel
UT System: PSP-4	Serial No. 209/206		Reference Block: N/A	
Software Version: P-SCAN Sys. 4 1.3		Rev. 2	Thickness: N/A	Material: N/A
Linearity Due Date: 11/30/2004			Reference Block Temp: AMB °F	
Scanner Type: AWS-5d	Serial No. 310		Couplant: Water	Batch No. N/A
Scanner Cable: COAXIAL			Cable Length: 80 Feet	
Signal Cable: COAXIAL			Cable Length: 80 Feet	

Channel	Transducer Make	Model	Freq. (MHz)	Size	Serial No.	Angle (deg) Nom. / Act.	Wedge Type
1	KB	MWB	4	8x9mm	3027	45	
2	KB	MWB	4	8x9mm	3098	45	
3							
4							

INITIAL CALIBRATION			CALIBRATION CHECKS						
DATE:		10/14/04	10/14/04	10/18/04	10/18/04	10/19/04	10/19/04	10/21/04	10/21/04
TIME:		0752	2140	0916	1750	1009	1442	0915	2010
REFLECTOR / ORIENTATION:		.050" Notch	.050" Notch	.050" Notch	.050" Notch	.050" Notch	.050" Notch	.050" Notch	.050" Notch
CH. 1	AMPLITUDE	80%/0db	80%/2db	80%/0db	80%/-1db	80%/0db	80%/2db	80%/0db	80%/0db
	LOCATION	1.414"	1.400"	1.414"	1.417"	1.414"	1.404"	1.414"	1.404"
CH. 2	AMPLITUDE	80%/0db	80%/1db	80%/0db	80%/1db	80%/0db	80%/2db	80%/0db	80%/1db
	LOCATION	1.414"	1.407"	1.414"	1.407"	1.414"	1.400"	1.414"	1.401"
CH. 3	AMPLITUDE								
	LOCATION								
CH. 4	AMPLITUDE								
	LOCATION								
EXAMINER:		WHN	WHN	WHN	WHN	WHN	WHN	WHN	WHN

Remarks:
CAL.P (VERT.WALL)

Examiner: W. H. Nelson	Examiner:	Reviewer:
WH Nel		
Level: III Date: 10/14-21/04	Level: ____ Date:	Level: ___ Date:

COGEMA-SVUT-INS-007.3, Rev. 2, Attachment 3 *Rev. Dec. 03, 2003*

AUTOMATED ULTRASONIC P-SCAN CALIBRATION SHEET			Job # 04-41	Riser # 30
Location: 200 EAST TANK FARM	System: 106-AP		Calibration Block: 444-99-30-004	
Procedure: COGEMA SVUT-INS-007.3	Rev. 2		Thickness: 1.0"	Material: Carbon Steel
UT System: PSP-4	Serial No. 209/206		Reference Block: N/A	
Software Version: P-SCAN Sys. 4 1.3	Rev. 2		Thickness: N/A	Material: N/A
Linearity Due Date: 11/30/2004			Reference Block Temp: AMB °F	
Scanner Type: AWS-5d	Serial No. 310		Couplant: Water	Batch No. N/A
Scanner Cable: COAXIAL			Cable Length: 80 Feet	
Signal Cable: COAXIAL			Cable Length: 80 Feet	

Channel	Transducer Make	Model	Freq. (MHz)	Size	Serial No.	Angle (deg) Nom. / Act.	Wedge Type
1	KB	MWB	4	8x9mm	03242	45	
2	KB	MWB	4	8x9mm	03243	45	
3							
4							

INITIAL CALIBRATION		CALIBRATION CHECKS							
DATE:		10/25/04	10/25/04	11/01/04	11/01/04	11/02/04	11/02/04	11/03/04	11/03/04
TIME:		0900	1424	0941	2020	0736	1440	0855	1936
REFLECTOR / ORIENTATION:		.050" Notch	.050" Notch	.050" Notch	.050" Notch	.050" Notch	.050" Notch	.050" Notch	.050" Notch
CH. 1	AMPLITUDE	80%/0db	80%/1db	80%/0db	80%/2db	80%/0db	80%/2db	80%/0db	80%/1db
	LOCATION	1.414"	1.407"	1.414"	1.401"	1.414"	1.404"	1.414"	1.401"
CH. 2	AMPLITUDE	80%/0db	80%/1db	80%/0db	80%/0db	80%/0db	80%/2db	80%/0db	80%/1db
	LOCATION	1.414"	1.404"	1.414"	1.411"	1.414"	1.411"	1.414"	1.407"
CH. 3	AMPLITUDE								
	LOCATION								
CH. 4	AMPLITUDE								
	LOCATION								
EXAMINER:		WHN	WHN	WHN	WHN	WHN	WHN	WHN	WHN

Remarks:
CAL.P1 (VERT.WALL)

Examiner: W. H. Nelson	Examiner:	Reviewer:
WHNelson		
Level: III Date: 10/25-11/03/04	Level: ____ Date:	Level: ___ Date:

COGEMA-SVUT-INS-007.3, Rev. 2, Attachment 3 *Rev. Dec. 03, 2003*

AUTOMATED ULTRASONIC P-SCAN CALIBRATION SHEET			Job # 04-41	Riser # 30
Location: 200 EAST TANK FARM	System: 106-AP		Calibration Block: 444-99-30-004	
Procedure: COGEMA SVUT-INS-007.3	Rev. 2		Thickness: 1.0"	Material: Carbon Steel
UT System: PSP-4	Serial No. 209/206		Reference Block: N/A	
Software Version: P-SCAN Sys. 4 1.3	Rev. 2		Thickness: N/A	Material: N/A
Linearity Due Date: 11/30/2004			Reference Block Temp: AMB °F	
Scanner Type: AWS-5d	Serial No. 310		Couplant: Water	Batch No. N/A
Scanner Cable: COAXIAL			Cable Length: 80 Feet	
Signal Cable: COAXIAL			Cable Length: 80 Feet	

Channel	Transducer Make	Model	Freq. (MHz)	Size	Serial No.	Angle (deg) Nom. / Act.	Wedge Type
1	KB	MWB	4	8x9mm	03245	45	
2	KB	MWB	4	8x9mm	3140	45	
3	KB	MWB	4	8x9mm	03246	45	
4	KB	MWB	4	8x9mm	3150	45	

INITIAL CALIBRATION		CALIBRATION CHECKS							
DATE:		11/08/04	11/08/04	11/10/04	11/10/04				
TIME:		1450	2010	0955	2011				
REFLECTOR / ORIENTATION:		.050" Notch	.050" Notch	.050" Notch	.050" Notch				
CH. 1	AMPLITUDE	80%/0db	80%/1db	80%/0db	80%/2db				
	LOCATION	1.414"	1.407"	1.414"	1.413"				
CH. 2	AMPLITUDE	80%/0db	80%/0db	80%/0db	80%/0db				
	LOCATION	1.414"	1.404"	1.414"	1.420"				
CH. 3	AMPLITUDE	80%/0db	80%/0db	80%/0db	80%/1db				
	LOCATION	1.414"	1.413"	1.414"	1.409"				
CH. 4	AMPLITUDE	80%/0db	80%/1db	80%/0db	80%/-2db				
	LOCATION	1.414"	1.417"	1.414"	1.420"				
EXAMINER:		WHN	WHN	WHN	WHN				

Remarks:
CAL.P2(VERT.WELD/2nd)

Examiner: W. H. Nelson	Examiner:	Reviewer:
WH Nelson		
Level: III Date: 11/08-10/04	Level: ____ Date:	Level: III Date:

COGEMA-SVUT-INS-007.3, Rev. 2, Attachment 3 Rev. Dec. 03, 2003

AUTOMATED ULTRASONIC P-SCAN CALIBRATION SHEET			Job # 04-41	Riser # 30
Location: 200 EAST TANK FARM	System: 106-AP		Calibration Block: 444-99-30-004	
Procedure: COGEMA SVUT-INS-007.3		Rev. 2	Thickness: 1.0"	Material: Carbon Steel
UT System: PSP-4	Serial No. 209/206		Reference Block: N/A	
Software Version: P-SCAN Sys. 4 1.3		Rev. 2	Thickness: N/A	Material: N/A
Linearity Due Date: 11/30/2004			Reference Block Temp: AMB °F	
Scanner Type: AWS-5d	Serial No. 310		Couplant: Water	Batch No. N/A
Scanner Cable: COAXIAL			Cable Length: 80 Feet	
Signal Cable: COAXIAL			Cable Length: 80 Feet	

Channel	Transducer Make	Model	Freq. (MHz)	Size	Serial No.	Angle (deg) Nom. / Act.	Wedge Type
1	KB	MWB	4	8x9mm	3094	60	
2	KB	MWB	4	8x9mm	3198	60	
3							
4							

INITIAL CALIBRATION			CALIBRATION CHECKS						
DATE:		11/04/04	11/04/04	11/08/04	11/08/04	11/09/04	11/09/04	11/10/04	11/10/04
TIME:		0845	1522	0736	1920	0719	1500	0858	2206
REFLECTOR / ORIENTATION:		.050" Notch	.050" Notch	.050" Notch	.050" Notch	.050" Notch	.050" Notch	.050" Notch	.050" Notch
CH. 1	AMPLITUDE	80%/0db	80%/-1db	80%/0db	80%/-1db	80%/0db	80%/0db	80%/0db	80%/1db
	LOCATION	2.00"	1.978"	2.00"	1.997"	2.00"	1.978"	2.00"	1.982"
CH. 2	AMPLITUDE	80%/0db	80%/0db	80%/0db	80%/0db	80%/0db	80%/0db	80%/0db	80%/-1db
	LOCATION	2.00"	1.981"	2.00"	1.976"	2.00"	2.004"	2.00"	1.976"
CH. 3	AMPLITUDE								
	LOCATION								
CH. 4	AMPLITUDE								
	LOCATION								
EXAMINER:		WHN	WHN	WHN	WHN	WHN	WHN	WHN	WHN

Remarks:
CAL.P3(VERT.WELD)

Examiner: W. H. Nelson	Examiner:	Reviewer:
W H Nelson		
Level: III Date: 11/04-10/04	Level: ____ Date:	Level: ___ Date:

COGEMA-SVUT-INS-007.3, Rev. 2, Attachment 3 Rev. Dec. 03, 2003

AUTOMATED ULTRASONIC P-SCAN CALIBRATION SHEET			Job # 04-41	Riser # 30
Location: 200 EAST TANK FARM	System: 106-AP		Calibration Block: 444-99-30-004	
Procedure: COGEMA SVUT-INS-007.3	Rev. 2		Thickness: 1.0"	Material: Carbon Steel
UT System: PSP-4	Serial No. 209/206		Reference Block: N/A	
Software Version: P-SCAN Sys. 4 1.3	Rev. 2		Thickness: N/A	Material: N/A
Linearity Due Date: 11/30/2004			Reference Block Temp: AMB °F	
Scanner Type: AWS-5d	Serial No. 310		Couplant: Water	Batch No. N/A
Scanner Cable: COAXIAL			Cable Length: 80 Feet	
Signal Cable: COAXIAL			Cable Length: 80 Feet	

Channel	Transducer Make	Model	Freq. (MHz)	Size	Serial No.	Angle (deg) Nom. / Act.	Wedge Type
1	KB	MWB	4	8x9mm	1856	60	
2	KB	MWB	4	8x9mm	3029	60	
3							
4							

INITIAL CALIBRATION			CALIBRATION CHECKS						
DATE:		11/11/04	11/11/04						
TIME:		0931	1445						
REFLECTOR / ORIENTATION:		.050" Notch	.050" Notch						
CH. 1	AMPLITUDE	80%/0db	80%/2db						
	LOCATION	2.00"	1.985"						
CH. 2	AMPLITUDE	80%/0db	80%/-2db						
	LOCATION	2.00"	2.004"						
CH. 3	AMPLITUDE								
	LOCATION								
CH. 4	AMPLITUDE								
	LOCATION								
EXAMINER:		WHN	WHN						

Remarks:
CAL.P4(VERT.WELD/RESCAN)

Examiner: W. H. Nelson	Examiner:	Reviewer:
WH Nelson		
Level: III Date: 11/11/04	Level: ____ Date:	Level: ___ Date:

COGEMA-SVUT-INS-007.3, Rev. 2, Attachment 3 Rev. Dec. 03, 2003

AUTOMATED ULTRASONIC P-SCAN CALIBRATION SHEET			Job # 04-41	Riser # 30
Location: 200 EAST TANK FARM	System: 106-AP		Calibration Block: 444-99-30-004	
Procedure: COGEMA SVUT-INS-007.3	Rev. 2		Thickness: 1.0"	Material: Carbon Steel
UT System: PSP-4	Serial No. 209/206		Reference Block: N/A	
Software Version: P-SCAN Sys. 4 1.3	Rev. 2		Thickness: N/A	Material: N/A
Linearity Due Date: 11/30/2004			Reference Block Temp: AMB °F	
Scanner Type: AWS-5d	Serial No. 310		Couplant: Water	Batch No. N/A
Scanner Cable: COAXIAL			Cable Length: 80 Feet	
Signal Cable: COAXIAL			Cable Length: 80 Feet	

Channel	Transducer Make	Model	Freq. (MHz)	Size	Serial No.	Angle (deg) Nom. / Act.	Wedge Type
1	KB	MWB	4	8x9mm	23200	60	
2	KB	MWB	4	8x9mm	23098	60	
3							
4							

INITIAL CALIBRATION			CALIBRATION CHECKS						
DATE:		11/11/04	11/11/04						
TIME:		0910	1454						
REFLECTOR / ORIENTATION:		.050" Notch	.050" Notch						
CH. 1	AMPLITUDE	80%/0db	80%/2db						
	LOCATION	2.00"	1.983"						
CH. 2	AMPLITUDE	80%/0db	80%/2db						
	LOCATION	2.00"	2.001"						
CH. 3	AMPLITUDE								
	LOCATION								
CH. 4	AMPLITUDE								
	LOCATION								
EXAMINER:		WHN	WHN						

Remarks:
CAL.P5(HORZ.WELD/RESCAN)

Examiner: W. H. Nelson	Examiner:	Reviewer:
WHNelson		
Level: III Date: 11/11/04	Level: ____ Date:	Level: ___ Date:

COGEMA-SVUT-INS-007.3, Rev. 2, Attachment 3 *Rev. Dec. 03, 2003*

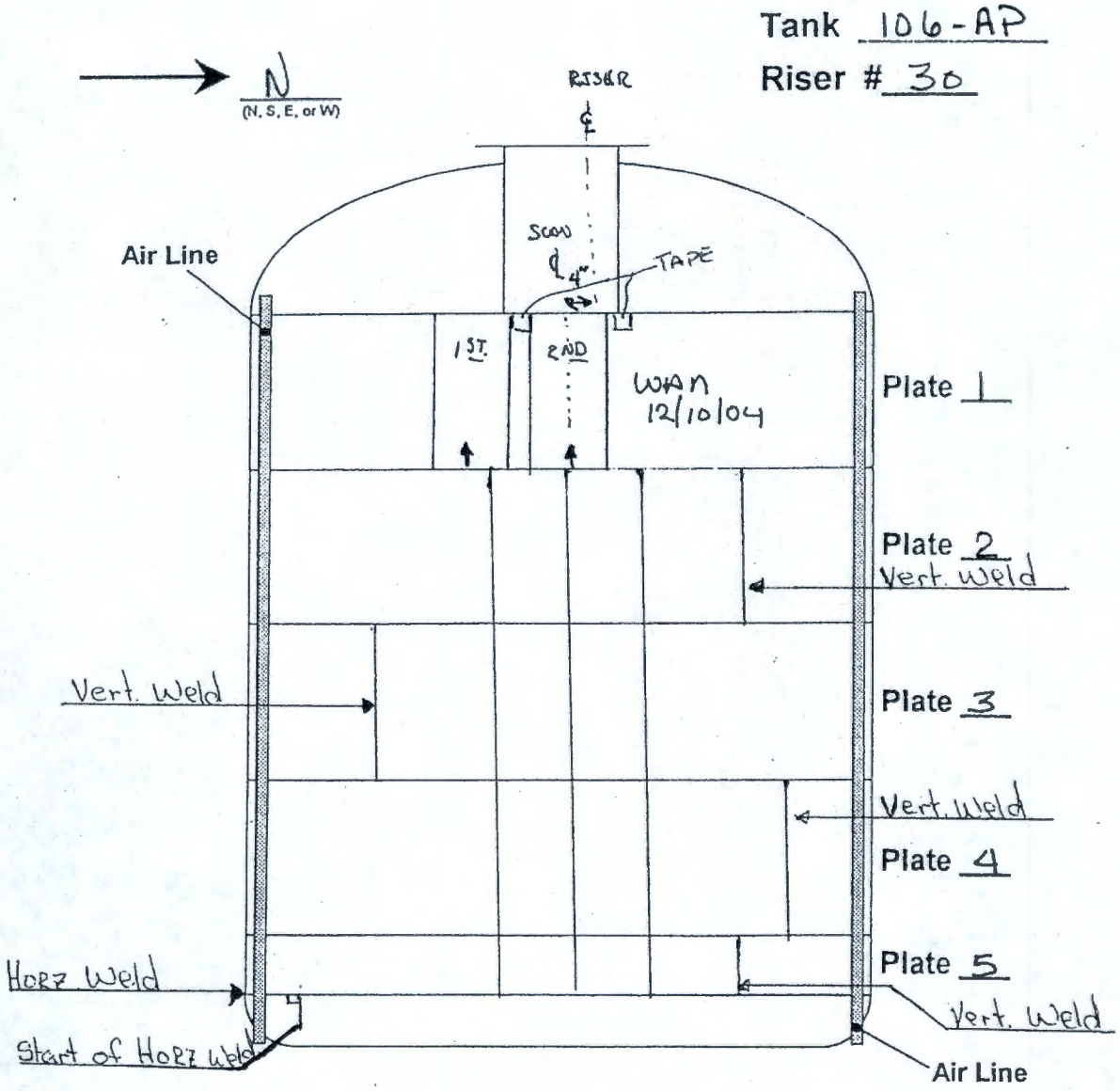
Tank 106-AP
Riser # 30
N
(N, S, E, or W)
RISER
SCAN
TAPE
Air Line
1ST
2ND
WAN
12/10/04
Plate 1
Plate 2
Vert. Weld
Vert. Weld
Plate 3
Vert. Weld
Plate 4
Plate 5
Horz Weld
Vert. Weld
Start of Horz Weld
Air Line

November 28, 2004

Mr. Daron Tate
COGEMA Engineering Corp.
2425 Stevens Center
Richland, WA. 99352

This letter is to certify that I have reviewed the P-scan automated ultrasonic data from Hanford waste tank 241-AP-106. The data reviewed was from the primary tank wall and was collected by Mr. Nelson October 18th. through November 11th. 2004. The data is acceptable. The data from vertical strips, vertical welds and horizontal weld was analyzed to the requirements of COGEMA procedure SVUT-INS-007.3 Revision 2.

There are no reportable indications. No cracking, reportable pitting or thinning was detected in any of the areas examined.

Sincerely,

James B. Elder
ASNT UT Level III

CC: Mr. W. H. Nelson - COGEMA

This page intentionally left blank.

ATTACHMENT 3

ULTRASONIC EXAMINATION OF DOUBLE-SHELL TANK 241-AP-106
EXAMINATION COMPLETED NOVEMBER 2004
(PNNL THIRD PARTY REVIEW)

This page intentionally left blank.

PNNL-14971 Rev. 0

Ultrasonic Examination of Double-Shell Tank 241-AP-106 Examination Completed November 2004

AF Pardini
GJ Posakony

December 2004

Prepared for
the U.S. Department of Energy
under Contract DE-AC06-76RL01830

Pacific Northwest National Laboratory
Richland, Washington 99352

This page intentionally left blank.

Summary

COGEMA Engineering Corporation (COGEMA), under a contract from CH2M Hill Hanford Group (CH2M Hill), has performed an ultrasonic nondestructive examination of selected portions of Double-Shell Tank 241-AP-106. The purpose of this examination was to provide information that could be used to evaluate the integrity of the wall of the primary tank. The requirements for the ultrasonic examination of Tank 241-AP-106 were to detect, characterize (identify, size, and locate), and record measurements made of any wall thinning, pitting, or cracks that might be present in the wall of the primary tank. Any measurements that exceed the requirements set forth in the Engineering Task Plan (ETP), RPP-22571 (Jensen 2004) and summarized on page 1 of this document, are reported to CH2M Hill and the Pacific Northwest National Laboratory (PNNL) for further evaluation. Under the contract with CH2M Hill, all data is to be recorded on disk and paper copies of all measurements are provided to PNNL for third-party evaluation. PNNL is responsible for preparing a report that describes the results of the COGEMA ultrasonic examinations.

Examination Results

The results of the examination of Tank 241-AP-106 have been evaluated by PNNL personnel. The ultrasonic examination consisted of two 15-in. wide scans over the entire height of the tank and the heat-affected zone (HAZ) of four vertical welds and one horizontal weld. The examination was performed to detect any wall thinning, pitting, or cracking in the primary tank wall.

Primary Tank Wall Vertical Scan Paths

Two 15-in.-wide vertical scan paths were performed on shell courses #1, #2, #3, #4, and #5. The shell courses were examined for wall thinning, pitting, and cracks oriented vertically on the primary tank wall. There were no areas of wall thinning that exceeded the reportable level of 10% of the nominal thickness. No pitting or vertical crack-like indications were detected in shell courses #1, #2, #3, #4, or #5.

Primary Tank Wall Weld Scan Paths

The HAZ of vertical welds in shell courses #2, #3, #4, and #5 were examined for wall thinning, pitting, and cracks oriented either perpendicular or parallel to the weld. There were no areas of wall thinning that exceeded the reportable level of 10% of the nominal thickness. No pitting or crack-like indications were detected in the weld HAZ areas in shell courses #2, #3, #4, and #5.

The HAZ of the horizontal weld between shell course #5 and the tank knuckle was examined for wall thinning, pitting and cracks oriented either perpendicular or parallel to the weld. There were no areas of wall thinning that exceeded the reportable level of 10% of the nominal thickness. No pitting or crack-like indications were detected in the weld HAZ areas on shell course #5 side or on the knuckle side of the horizontal weld.

Contents

1.0 Introduction 1

2.0 Qualified Personnel, Equipment, and Procedure 2

2.1 Personnel Qualifications 2
2.2 Ultrasonic Examination Equipment 2
2.3 Ultrasonic Examination Procedure 3

3.0 Ultrasonic Examination Configuration 4

3.1 Primary Tank Wall Transducer Configuration 4
3.2 Weld Zone Transducer Configuration 5

4.0 Ultrasonic Examination Location 7

5.0 Ultrasonic Examination Results 9

6.0 Conclusions 12

6.1 Primary Tank Wall Vertical Scan Paths 12
6.2 Primary Tank Wall Weld Scan Paths 12

7.0 References 13

Figures

3.1 Transducer Configuration for Examining the Primary Tank Wall 4

3.2 Transducer Configurations for Examination of Weld Zone in the Primary Tank Wall 5

3.3 Views of the Weld Zone to be Ultrasonically Examined in the Primary Tank Wall 6

4.1 UT of 241-AP-106 from Riser 30 7

4.2 Sketch of Scan Paths on Tank 241-AP-106 8

5.1 UT Data from Tank 241-AP-106 10

5.2 UT Data from Tank 241-AP-106 cont. 11

1.0 Introduction

COGEMA Engineering Corporation (COGEMA), under a contract from CH2M Hill Hanford Group (CH2M Hill), has performed an ultrasonic nondestructive examination (UT) of selected portions of Double-Shell Tank (DST) 241-AP-106. The purpose of this examination was to provide information that could be used to evaluate the integrity of the DST. The requirements for the UT of Tank 241-AP-106 were to detect, characterize (identify, size, and locate), and record measurements made of any wall thinning, pitting, or cracks that might be present in the wall of the primary tank. Any measurements that exceed the requirements set forth in the Engineering Task Plan (ETP), RPP-22571 (Jensen 2004), are reported to CH2M Hill and the Pacific Northwest National Laboratory (PNNL) for further evaluation. Specific measurements that are reported include the following:

- Wall thinning that exceeds 10% of the nominal thickness of the shell course plate.
- Pits with depths that exceed 25% of the nominal shell course plate thickness.
- Stress-corrosion cracks that exceed 0.10-in. (through-wall) that are detected in the inner wall of the tank, heat-affected zone (HAZ) of welds, or in the tank knuckle.

The accuracy requirements for ultrasonic measurements for the different types of defects are as follows:

- Wall thinning – measure thickness within ±0.020-in.
- Pits – size depths within ±0.050-in.
- Cracks – size the depth of cracks on the inner wall surfaces within ±0.1-in.
- Location – locate all reportable indications within ±1.0-in.

Under the contract with CH2M Hill, all data is to be recorded on disk and paper copies of all measurements are provided to PNNL for third-party evaluation. PNNL is responsible for preparing a report that describes the results of the COGEMA UT.

2.0 Qualified Personnel, Equipment, and Procedure

Qualification of personnel participating in the DST inspection program, the UT equipment (instrument and mechanical scanning fixture), and the UT procedure that will be used in the examination of the current DST is required by CH2M Hill. Personnel participating in the examinations are to be certified in accordance with the American Society for Nondestructive Testing (ASNT) Guideline SNT-TC-1A-92 and associated documentation is to be provided. The capability of the UT system, personnel, and procedure is to be validated through a performance demonstration test (PDT) administered by PNNL on a mock-up simulating the actual DST. The current procedure for the UT is to be based on the Section V, Article 4, *Boiler and Pressure Vessel Code* defined by the American Society for Mechanical Engineers (ASME).

2.1 Personnel Qualifications

The following individuals were qualified and certified to perform UT of the Hanford DST 241-AP-106:

- **Mr. Wesley Nelson**, ASNT Level III (#LM-1874) in UT, has been identified as COGEMA's UT Level III authority for this project. Mr. Nelson has been certified by COGEMA as a UT Level III in accordance with COGEMA procedure COGEMA-SVCP-PRC-014, latest revision. Further documentation has been provided to establish his qualifications. Reference: Letter from PNNL to C.E. Jensen dated August 22, 2000, "Report on Performance Demonstration Test – PDT, May 2000."

- **Mr. James B. Elder**, ASNT Level III (#JM-1891) in UT, has been contracted by COGEMA to provide peer review of all DST UT data. Mr. Elder has been certified by JBNDT as a UT Level III in accordance with JBNDT written practice JBNDT-WP-1, latest revision. Further documentation has been provided to establish his qualifications. Reference: PNNL-11971, *Final Report - Ultrasonic Examination of Double-Shell Tank 241-AN-107.*

2.2 Ultrasonic Examination Equipment

CH2M Hill has provided the UT equipment for the examination of Tank 241-AP-106. This equipment consists of a Force Technology P-Scan ultrasonic test instrument and a Force Technology AWS-5D remote-controlled, magnetic-wheel crawler for examining the primary tank wall. Ultrasonic transducers used for the examinations are commercial off the shelf. The P-Scan ultrasonic system has been qualified through a PDT administered by PNNL. Reference: PNNL-11971, *Final Report-Ultrasonic Examination of Double-Shell Tank 241-AN-107.*

2.3 Ultrasonic Examination Procedure

COGEMA has provided the UT procedure for the examination of Tank 241-AP-106. This procedure, COGEMA-SVUT-INS-007.3, Revision 2, outlines the type of UT and mechanical equipment that are to be used as well as the types of transducers. Both straight-beam and angle-beam transducers are used for the examination of the primary tank wall and the HAZ of selected primary tank vertical and horizontal welds. The examination procedures include full documentation on methods for calibration, examination, and reporting. Hard copies of the T-Scan (thickness) and P-Scan (projection or angle beam) views of all areas scanned are made available for analysis. The UT procedure requires the use of specific UT transducers for the different examinations. A calibration performed before and after the examinations ensures that each transducer used in the inspection is adjusted and that the entire system is performing correctly. The COGEMA UT procedure has been qualified through a PDT. Reference: PNNL-11971, *Final Report - Ultrasonic Examination of Double-Shell Tank 241-AN-107.*

3.0 Ultrasonic Examination Configuration

COGEMA is required to inspect selected portions of the DSTs which may include the primary and secondary tank walls, the HAZ of the primary tank vertical and horizontal welds, and the tank knuckle and bottoms. The P-Scan system has been configured to perform these examinations and has been performance tested. The examination of Tank 241-AP-106 included UT of the primary tank wall and the HAZ of selected welds in the primary tank wall.

3.1 Primary Tank Wall Transducer Configuration

Figure 3.1 provides an example of the scanning configuration generally used during an examination of the primary tank wall. However, other configurations can be used at the discretion of the COGEMA UT Level III (i.e., 45-degree transducers can be removed for simple wall thickness measurements). The functional diagram in Figure 3.1 shows one straight-beam and two angle-beam transducers ganged together for examining the primary tank wall. The straight beam is designed to detect and record wall thinning and pits, and the angle beams are designed to detect and record any cracking that may be present. These transducers are attached to the scanning bridge and they all move together. Information is captured every 0.035-in. (or as set by the NDE inspector) as the assembly is scanned across a line. At the end of each scan the fixture is indexed 0.035-in. (or as set by the NDE inspector) and the scan is repeated. The mechanical scanning fixture is designed to scan a maximum of 15-in. and then index for the next scan. The hard copy provides a permanent record that is used for the subsequent analysis.

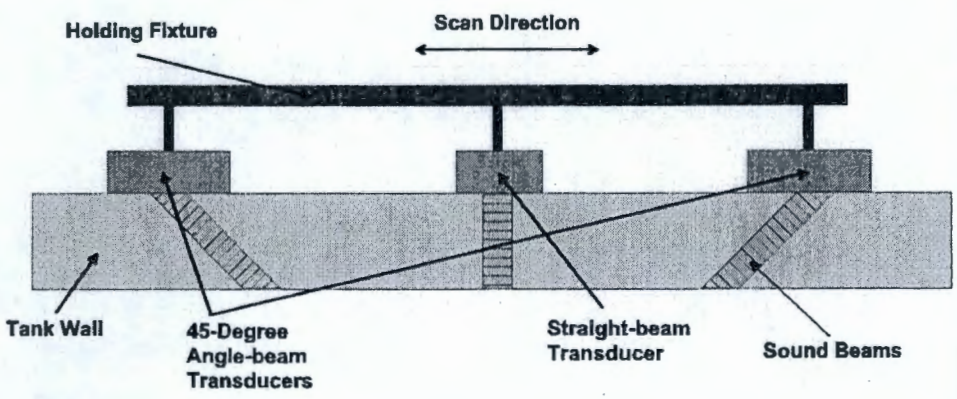

Transducer Specifications:

Angle-Beam
Type: MWB-45 04E
Frequency: 4 MHz
Size: 8 X 9 mm
Manufacturer: Krautkramer

Straight-Beam
Type: MSEB 5B
Frequency: 5 MHz
Size: Dual - 2 X 8 mm
Manufacturer: Krautkramer

Figure 3.1. Transducer Configuration for Examining the Primary Tank Wall

3.2 Weld Zone Transducer Configuration

Figure 3.2 is a functional sketch that shows the configurations for examination of the weld zone. The area of interest (HAZ of the weld) is shown as lying adjacent to the weld. Both cracks and pitting may occur in this region. The "A" portion of this sketch shows the 60-degree angle-beam transducers used for detecting cracks parallel to the weld. The straight-beam transducers in this sketch are used for detecting and recording any pitting or wall thinning that may be present. All transducers are ganged together. The scanning distance traveled is limited to a total of approximately 5.0-in. The sketch titled "B" shows the arrangement for detecting cracks that may lie perpendicular to the weld. Four 45-degree, angle-beam transducers are used for this inspection. Again the transducers are ganged together but the scan is limited to a total of approximately 4.0-in. The weld zone requirements are shown in Figure 3.3. The scan protocol, data capture, and index are the same for examining other weld areas in the tank.

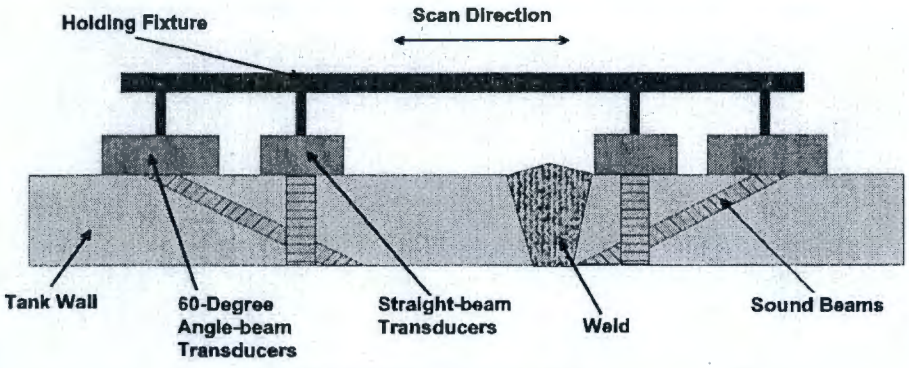

A. Configuration for pitting and cracks parallel to weld

Transducer Specifications:
Angle-Beam
Type: MWB-60 04E
Frequency: 4 MHz
Size: 8 X 9 mm
Manufacturer: Krautkramer

Straight-Beam
Type: MSEB 5B
Frequency: 5 MHz
Size: Dual - 2 X 8 mm
Manufacturer: Krautkramer

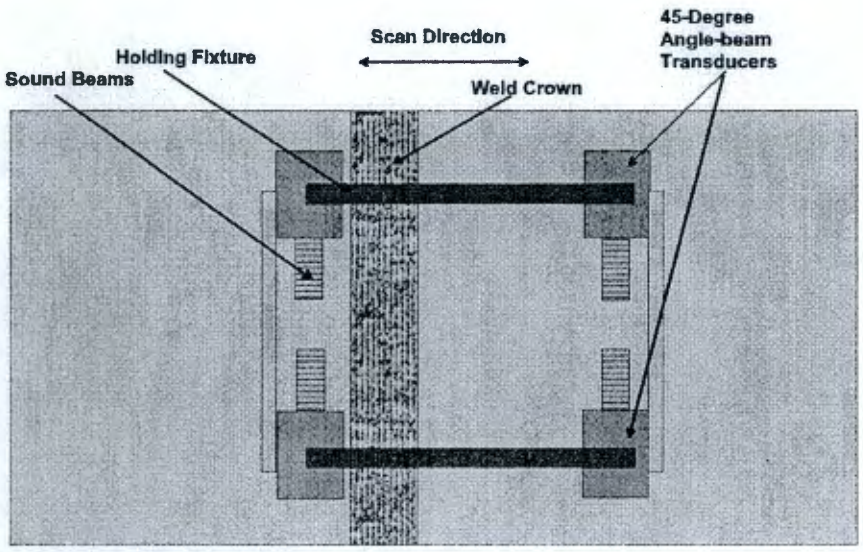

B. Configuration for cracks perpendicular to weld

Transducer Specifications:
Angle-Beam
Type: MWB-45 04E
Frequency: 4 MHz
Size: 8 X 9 mm
Manufacturer: Krautkramer

Figure 3.2. Transducer Configurations for Examination of Weld Zone in the Primary Tank Wall

In the HAZ, the requirement for characterizing cracks that lie perpendicular or parallel to welds in the primary tank wall is described in Figure 3.3. The HAZs are located on either side of the weld and defined as being within 1-in. of the toe of the weld and on the inner three-quarters of the thickness (3/4T) of the shell course plate. These zones are considered most likely to experience stress-corrosion cracking.

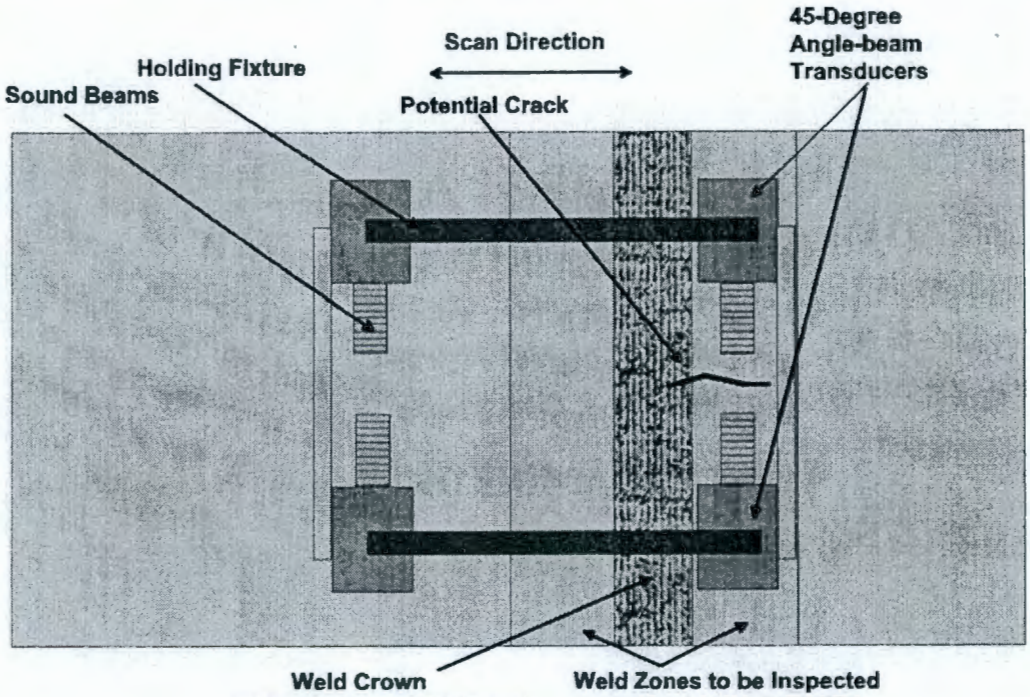

Top View --- Cracks Perpendicular to the Weld

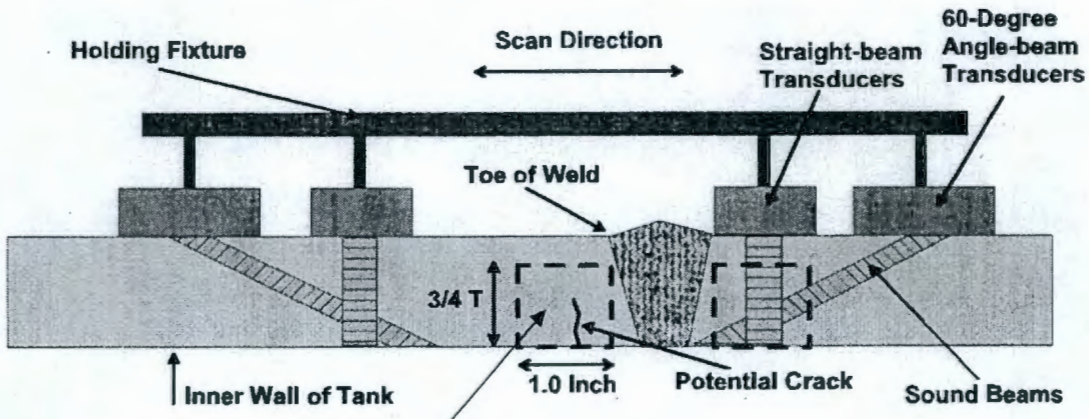

A zone ¾ T from the inner surface and 1.0-in. from the toe of the weld is to be ultrasonically examined for cracking, corrosion or pitting. Examinations are to be made on both sides of the weld.

End View --- Cracks Parallel to the Weld

Figure 3.3. Views of the Weld Zone to be Ultrasonically Examined in the Primary Tank Wall

4.0 Ultrasonic Examination Location

Tank 241-AP-106 is located in the Hanford 200 East area in AP Tank Farm. The crawler and associated scanner that hold the transducers were lowered into the 24-in. riser located on the east side of 241-AP-106 and designated as Riser 30. Figure 4.1 provides a graphic of the location of this riser.

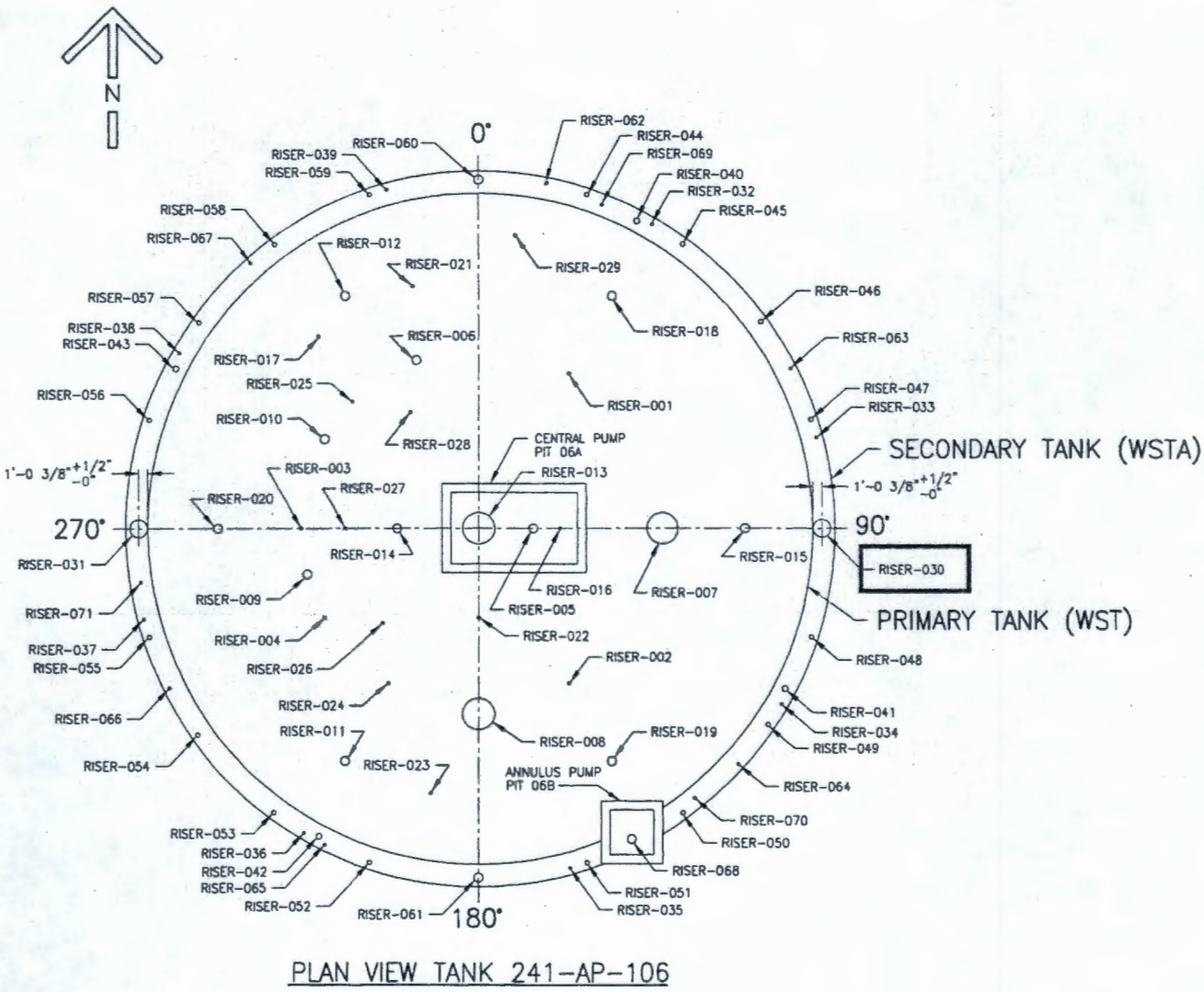

Figure 4.1. UT of 241-AP-106 from Riser 30

Figure 4.2 describes the areas on the primary wall of Tank 241-AP-106 that were ultrasonically examined. Two 15-in.-wide vertical scan paths were performed on shell courses #1, #2, #3, #4, and #5 below the entrance to Riser 30. Vertical weld HAZ examinations were done on shell courses #2, #3, #4, and #5, and the horizontal weld HAZ examination was done on the transition shell course #5 to knuckle weld.

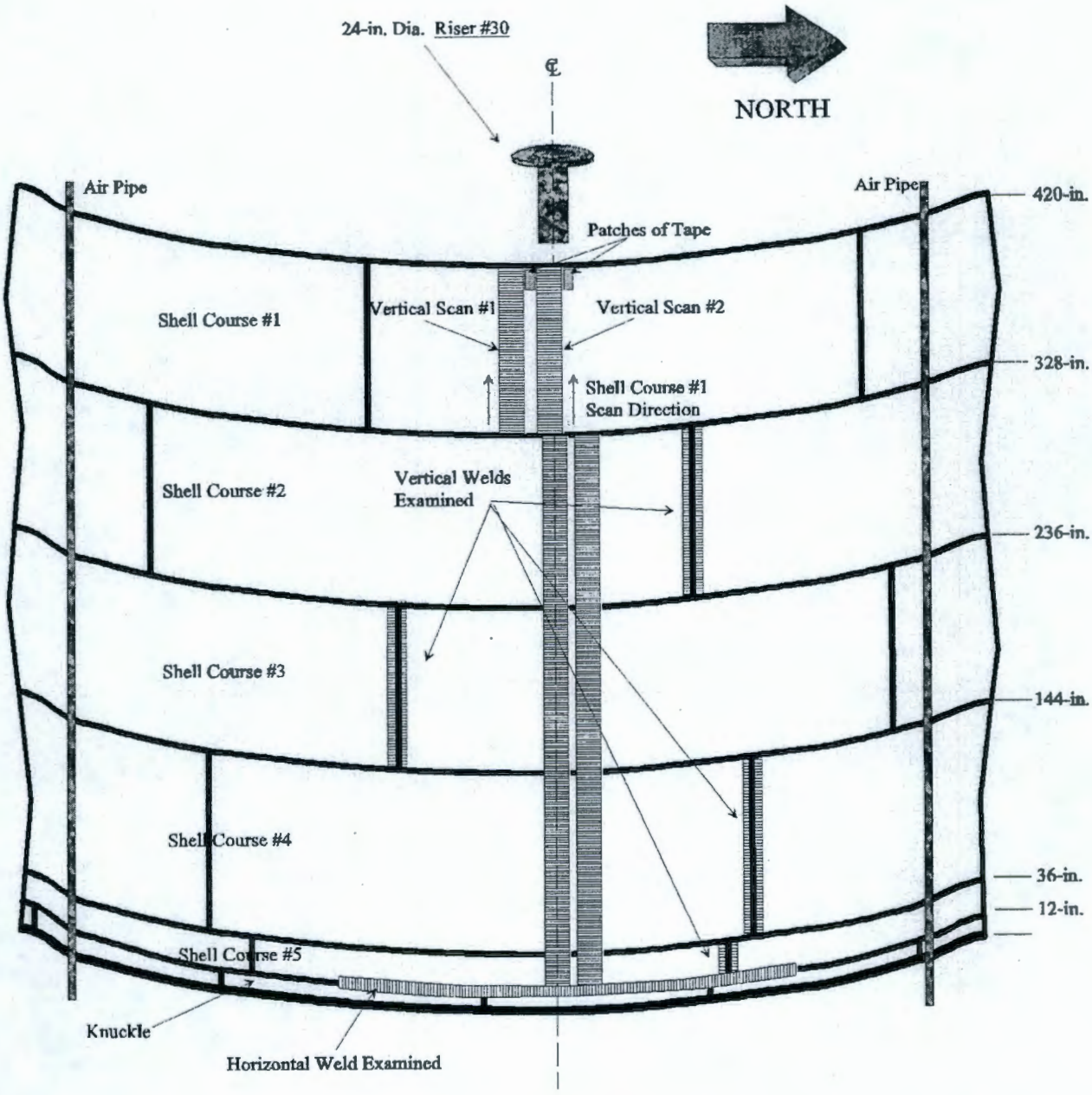

Figure 4.2. Sketch of Scan Paths on Tank 241-AP-106

5.0 Ultrasonic Examination Results

COGEMA has provided detailed reports including T-Scan and P-Scan hard copies of all areas that were ultrasonically examined to PNNL for third-party review. The data was analyzed by COGEMA Level III Mr. Wes Nelson and peer reviewed by JBNDT Level III Mr. Jim Elder. The results of the examination of Tank 241-AP-106 are presented in Figures 5.1 and 5.2.

Figures 5.1 and 5.2 show the wall thickness examination results for the primary tank wall and the HAZs of both vertical and horizontal welds. The examination consisted of two vertical paths beneath the 24-in. diameter riser. Vertical scan #1 was 15-in. wide on shell courses #1, #2, #3, #4, and #5 near the centerline of the 24-in. riser. Vertical scan #2 was adjacent to vertical scan #1 and was also 15-in. wide on shell courses #1, #2, #3, #4, and #5. Due to patches of tape on the surface of shell course #1, scans were performed from the bottom of the plate to the top. This obstruction was only on shell course #1, all other plates were scanned from the top down. The HAZs of vertical welds in shell courses #2, #3, #4, and #5 were examined and the HAZ in the horizontal weld between shell course #5 and the knuckle section was also examined. Areas in the figures that show two measurements in the same box are the result of the vertical scan paths overlapping the horizontal HAZ scan paths. Figures 5.1 and 5.2 display the minimum readings taken in each 15-in. wide by 12-in. long area of the scan. In the overlapping areas, both minimum readings from each of vertical and horizontal scan paths are given.

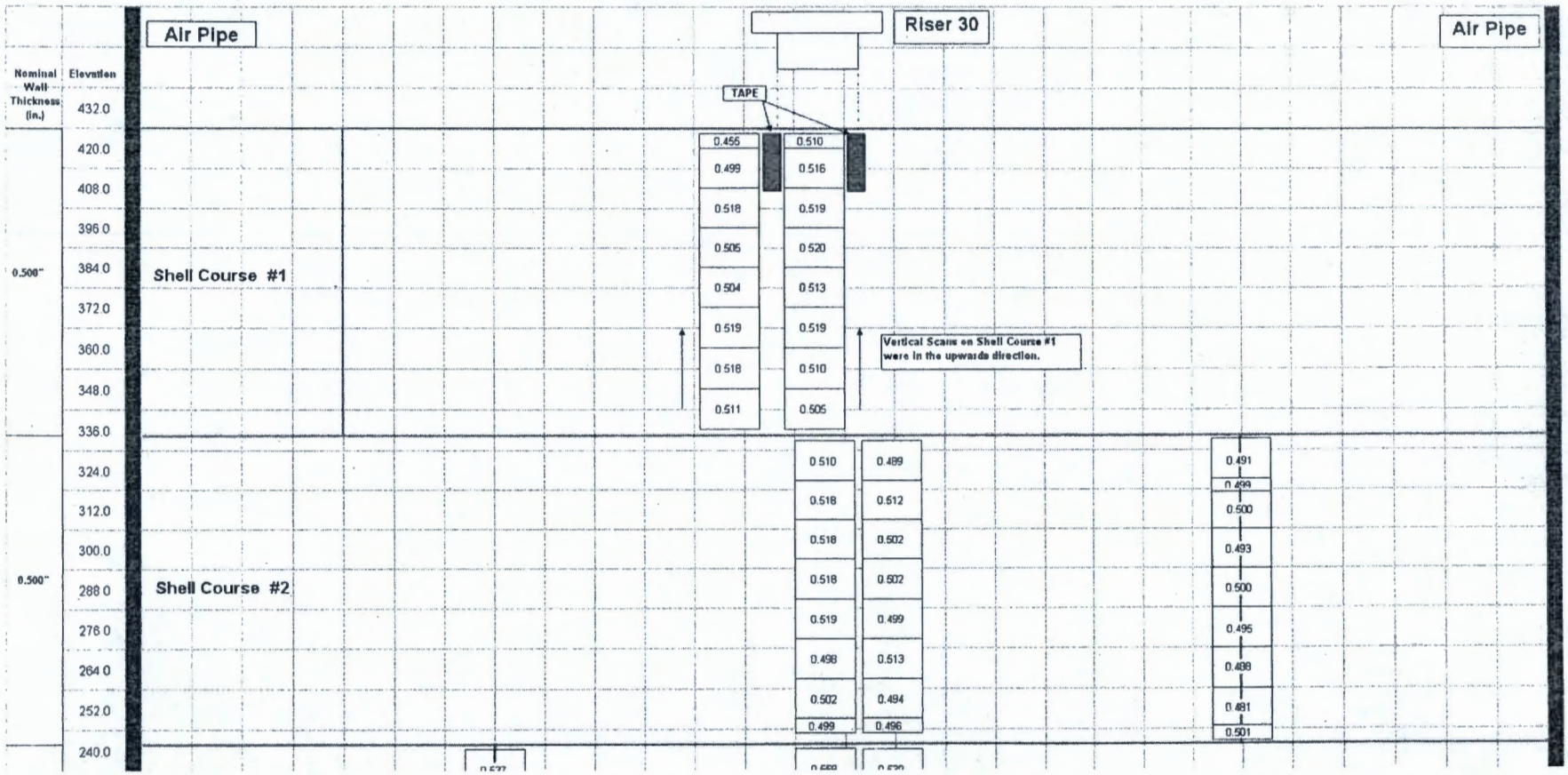

Figure 5.1. UT Data from Tank 241-AP-106

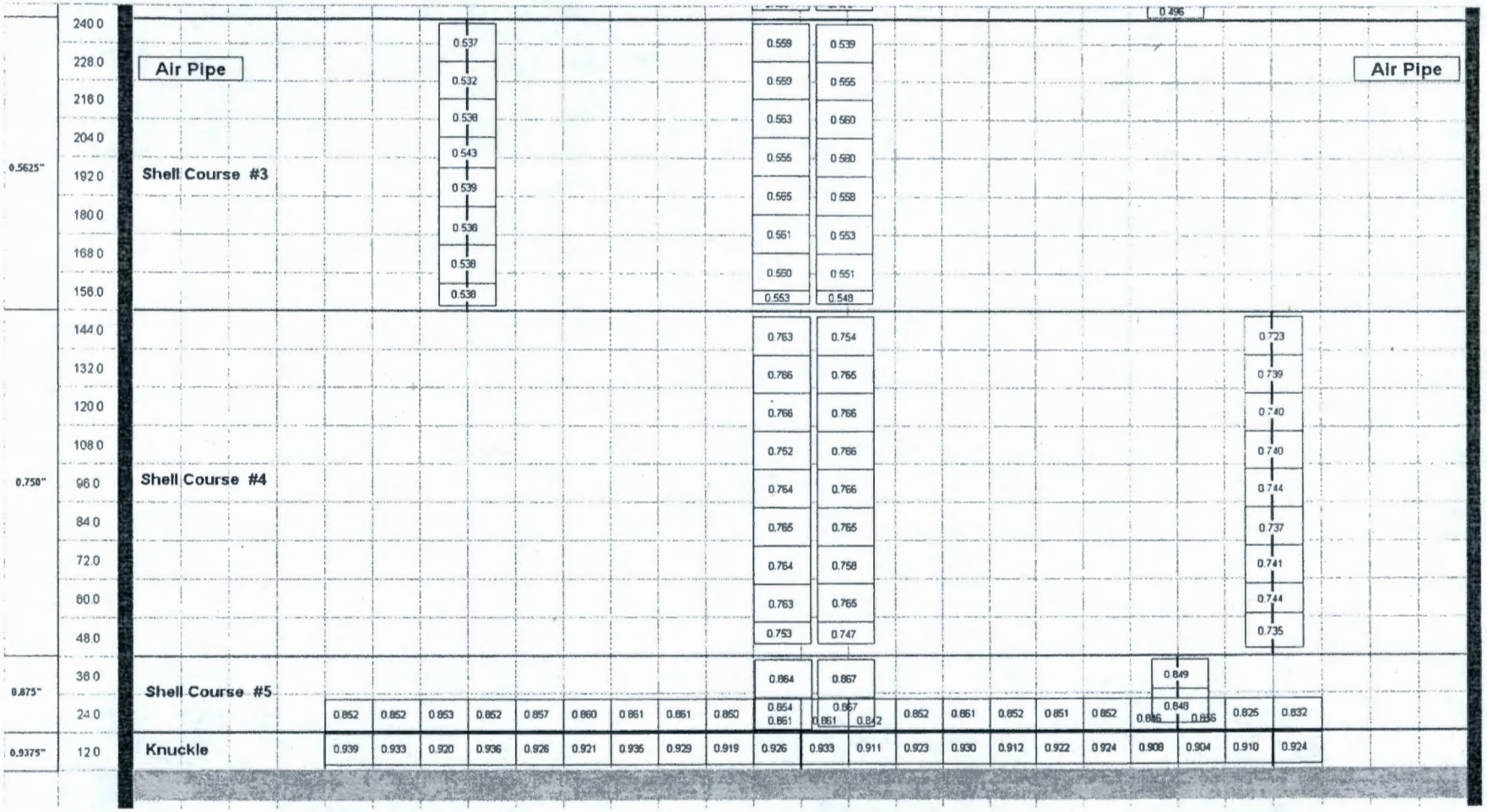

Figure 5.2 UT Data from Tank 241-AP-106 cont.

6.0 Conclusions

The results of the examination of Tank 241-AP-106 have been evaluated by PNNL personnel. The examination consisted of two 15-in. wide scans over the entire height of the tank and the HAZs of 4 vertical welds and 1 horizontal weld. The examination was performed to detect any wall thinning, pitting, or cracking in the primary tank wall.

6.1 Primary Tank Wall Vertical Scan Paths

Two 15-in.-wide scan paths were performed on shell courses #1, #2, #3, #4, and #5. The shell courses were examined for wall thinning, pitting, and cracks oriented vertically on the primary tank wall. The results indicated that the minimum thicknesses in the areas scanned with nominal thickness of 0.500-in. were as follows; shell course #1 was 0.455-in. and shell course #2 was 0.489-in. The nominal thickness in shell course #3 is 0.5625-in. and the minimum thickness in this area was 0.539-in. The nominal thickness in shell course #4 is 0.750-in. and the minimum thickness in this area was 0.747-in. The nominal thickness in shell course #5 is 0.875-in. and the minimum thickness in this area was 0.854-in. There were no areas of wall thinning that exceeded the reportable level of 10% of the nominal thickness. No pitting or vertical crack-like indications were detected in shell courses #1, #2, #3, #4, or #5.

6.2 Primary Tank Wall Weld Scan Paths

The HAZ of vertical welds in shell courses #2, #3, #4, and #5 were examined for wall thinning, pitting and cracks oriented either perpendicular or parallel to the weld. The results indicated that the minimum thicknesses in the weld areas scanned were as follows: The nominal thickness of shell course #2 is 0.500-in. and the minimum thickness in this weld area was 0.481-in. The nominal thickness in shell course #3 is 0.5625-in. and the minimum thickness in this weld area was 0.532-in. The nominal thickness in shell course #4 is 0.750-in. and the minimum thickness in this weld area was 0.723-in. The nominal thickness in shell course #5 is 0.875-in. and the minimum thickness in this weld area was 0.848-in. There were no areas of wall thinning that exceeded the reportable level of 10% of the nominal thickness. No pitting or crack-like indications were detected in the weld areas in shell courses #2, #3, #4, and #5.

The HAZ of the horizontal weld between shell course #5 and the tank knuckle was examined for wall thinning, pitting and cracks oriented either perpendicular or parallel to the weld. The results indicated that the minimum thickness in the weld area with nominal thickness of 0.875-in. on shell course #5 was 0.825-in. The minimum thickness in the weld area with nominal thickness of 0.9375-in. on the knuckle was 0.904-in. There were no areas of wall thinning that exceeded the reportable level of 10% of the nominal thickness. No pitting or crack-like indications were detected in the weld areas on shell course #5 side or on the knuckle side of the horizontal weld.

7.0 References

Jensen, C. E., 2004, *Engineering Task Plan for the Ultrasonic Inspection of Hanford Double-Shell Tanks FY2005*, RPP-22571, Rev 0, September 2004, CH2M Hill Hanford Group, Inc., Richland, Washington.

Distribution

No. of
Copies

Offsite

1 DOE Office of Science and
Technology
Kurt Gerdes
1154 Cloverleaf Building
19901 Germantown Road
Germantown, MD 20874-1290

Onsite

3 **Hanford Site**

J. L. Castleberry (1)	R3-76
C. E. Jensen (2)	R3-76

8 **Pacific Northwest National Laboratory**

S. L. Crawford (1)	K5-26
A. F. Pardini (5)	K5-26
G. J. Posakony (1)	K5-26
T. T. Taylor (1)	K5-26

This page intentionally left blank.