BHI-01018
Rev. 2

Environmental Restoration Contractor Management Plan for Inactive Miscellaneous Underground Storage Tanks (IMUSTs)

Prepared for the U.S. Department of Energy, Richland Operations Office
Office of Environmental Restoration

Submitted by: Bechtel Hanford, Inc.

TRADEMARK DISCLAIMER
Reference herein to any specific commercial product, process, or service by trade name, trademark, manufacturer, or otherwise, does not necessarily constitute or imply its endorsement, recommendation, or favoring by the United States Government or any agency thereof or its contractors or subcontractors.

This report has been reproduced from the best available copy. Available in paper copy and microfiche.

Available for a processing fee to U.S. Department of Energy and its contractors from:
U.S. Department of Energy
Office of Scientific and Technical Information
P.O. Box 62
Oak Ridge, TN 37831-0062
(865) 576-8401
fax: (865) 576-5728
email: reports@adonis.osti.gov
online ordering: http://www.doe.gov/bridge

Available for sale to the public, in paper, from:
U.S. Department of Commerce
National Technical Information Service
5285 Port Royal Road
Springfield, VA 22161
(800) 553-6847
fax: (703) 605.6900
email: orders@ntis.fedworld.gov
online ordering: http://www.ntis.gov/ordering.htm

Printed in the United States of America

DISCLM-5.CHP (11/99)

BHI-01018
Rev. 2
OU: N/A
TSD: N/A
ERA: N/A

APPROVAL PAGE

Title: Environmental Restoration Contractor Management Plan for Inactive Miscellaneous Underground Storage Tanks (IMUSTs)

Approval: J. J. McGuire, S&M Project Manager

Signature

5/21/02
Date

BHI-DIS JMR 5/22/02

The approval signature on this page indicates that this document has been authorized for information release to the public through appropriate channels. No other forms or signatures are required to document this information release.

BHI-01018
Rev. 2

Environmental Restoration Contractor Management Plan for Inactive Miscellaneous Underground Storage Tanks (IMUSTs)

Authors

J. D. Condron
N. R. Kerr
A. M. Nazarali
Bechtel Hanford, Inc.

Date Published

May 2002

EXECUTIVE SUMMARY

This document has been revised to include the descriptions of two inactive miscellaneous underground storage tanks (IMUSTs) (276-S-141 and 276-S-142) due to interim closure, to add two IMUSTs (200-E-58 and 270-E-1), and to delete four IMUSTs (vault tanks 244-ER-001, 244-UR-002, 244-UR-003, and 244-UR-004) due to transfer of management responsibility.

The Environmental Restoration Contractor's management plan for the IMUSTs currently managed by Bechtel Hanford, Inc. (BHI) is presented in this document. The management plan includes the following information:

- Provides a brief summary of the background and safety issues associated with IMUSTs
- Provides descriptive information for each IMUST (including management status, operational history, isolation/stabilization status, and current risk rankings)
- Identifies completed facility safety analysis documentation addressing the IMUST safety issues for 14 tanks
- Provides a risk assessment for nine IMUSTs without facility safety analysis documentation.

PURPOSE

The management plan was prepared to determine the controls necessary for each tank to ensure safety during the surveillance and maintenance (S&M) period.

BACKGROUND

In BHI-01018, Rev. 1, BHI included a risk assessment for the seven IMUSTs that would be under BHI management. Since the time that Rev. 1 was issued, two additional IMUSTs have been assigned to BHI (tanks 200-E-58 and 270-E-1). This revision contains the risk assessments

and the methodology used for nine IMUSTs. The nine IMUSTs are as follows: 216-BC-201, 216-BY-201, 216-TY-201, 241-B-361, 241-T-361, 241-U-361, 270-W, 200-E-58, and 270-E-1.

BHI ACTIONS TO DATE

Since 1997, BHI has completed auditable safety analysis (ASA) or safety analysis report (SAR) documents that identify, research, evaluate, and disposition issues for 14 of the 23 in-scope IMUST tanks (241-WR vaults [9 total], and tanks 241-CX-70, 241-CX-71, 241-CX-72, 276-S-141, and 276-S-142). The ASA and SAR documents have been reviewed and approved by the U.S. Department of Energy. The associated ASA or SAR concluded that existing surveillance and administrative requirements under the Radiation Area Remedial Action (RARA) Program are adequate to ensure near- and long-term safety under inactive S&M. The 276-S-141 and 276-S-142 hexone tanks at the Reduction-Oxidation (REDOX) Facility are managed as inactive facility components under the REDOX SAR (BHI 2001a).

BHI has prepared risk assessments for nine of the in-scope IMUSTs (as defined in Appendix A) that lack an ASA or SAR analysis. These risk assessments are presented in Appendix B of this document. Recent studies by other companies for similar tanks were considered in the risk assessments. Studies reviewed included the unreviewed safety questions at the tank farms related to ferrocyanide hazards, criticality, and organic concerns, as well as the 241-Z-361 sludge characterization sampling and analysis plan. The assigned risk rankings are consistent with the conclusions of these studies. For each of the nine tanks, the assessment concluded that continued S&M in accordance with the RARA Program and procedures is adequate to ensure near- and long-term safety under inactive S&M. Items under the RARA Program include periodic surveillance, access control, maintenance against biological intrusion, and response to contingencies (e.g., subsidence and natural phenomena). Final disposition of these tanks will be determined as part of the larger aggregate area that contains the tank. When these decisions are made, additional safety and environmental requirements should be considered.

TABLE OF CONTENTS

1.0 INTRODUCTION 1-1

1.1 OVERVIEW 1-1

1.2 PURPOSE 1-1

1.3 BACKGROUND OF BHI-01018 1-1

1.4 BACKGROUND OF IMUST SAFETY ISSUES 1-2

1.5 DEVELOPMENT OF RISK RANKINGS 1-3

1.5.1 ASA/SAR Risk Rankings 1-3
1.5.2 Risk Assessment Risk Rankings 1-3

2.0 IMUST SAFETY ISSUES 2-1

2.1 HYDROGEN GENERATION AND BUILDUP 2-1

2.2 FERROCYANIDE REACTIVITY 2-1

2.3 ORGANIC SALT REACTIVITY 2-1

2.4 HIGH HEAT 2-2

2.5 CRITICALITY 2-2

2.6 FLAMMABILITY 2-2

2.7 NOXIOUS VAPOR EMISSIONS 2-2

2.8 LEAK POTENTIAL 2-3

2.9 RADIOLOGICAL HAZARDS 2-3

3.0 DESCRIPTION AND RISK RANKINGS FOR ERC IMUSTS 3-1

3.1 216-BC-201 SIPHON TANK 3-1

3.2 216-BY-201 SIPHON TANK 3-2

3.3 216-TY-201 SIPHON TANK 3-4

3.4 241-B-361 SETTLING TANK 3-5

3.5 241-U-361 SETTLING TANK 3-7

3.6 241-T-361 SETTLING TANK 3-8

3.7 241-WR VAULT AND TANKS 241-WR-001, 241-WR-002, 241-WR-003, 241-WR-004, 241-WR-005, 241-WR-006; 241-WR-007, 241-WR-008, AND 241-WR-009 3-9

3.8 241-CX-70 PROCESS WASTE HANDLING TANK 3-11

3.9 241-CX-71 NEUTRALIZATION TANK 3-12

3.10 241-CX-72 EXPERIMENTAL TANK 3-13

3.11 270-W NEUTRALIZATION TANK 3-14

3.12 276-S-141 AND 276-S-142 HEXONE RECOVERY/STORAGE TANKS 3-15

3.13 200-E-58 NEUTRALIZATION TANK 3-17

3.14 TANK 270-E-1 3-18

4.0 CONCLUSIONS 4-1

5.0 REFERENCES 5-1

APPENDICES

A. IMUST STATUS AND OWNERSHIP ..... A-i
B. RISK ASSESSMENTS ..... B-i

FIGURES

3-1. Location of the 216-BY-201 Siphon Tank....3-22
3-4. 216-BY-201 Siphon Tank....3-23
3-5. Location of the 216-TY-201 Siphon Tank....3-24
3-6. 216-TY-201 Siphon Tank....3-25
3-7. Location of the 241-B-361 Settling Tank....3-26
3-8. Settling Tanks 241-B-361, 241-U-361, and 241-T-361....3-27
3-9. Location of the 241-U-361 Settling Tank....3-28
3-10. Location of the 241-T-361 Settling Tank....3-29
3-11. Location of the 241-WR-Vault and Tanks....3-30
3-12. 241-WR Vault and Tanks....3-31
3-13. Location of Tanks 241-CX-70, 241-CX-71, and 241-CX-72....3-32
3-14. Tank 241-CX-70....3-33
3-15. Tank 241-CX-71....3-34
3-16. Tank 241-CX-72....3-35
3-17. Location of the 270-W Neutralization Tank....3-36
3-18. 270-W Neutralization Tank....3-37
3-19. Location of the 276-S-141 and 276-S-142 Hexone Tanks....3-38
3-20. Tanks 276-S-141 and 276-S-142....3-39
3-21. Location of the 200-E-58 Neutralization Tank....3-40
3-22. 200-E-58 Neutralization Tank....3-41
3-23. Location of the 270-E-1 Neutralization Tank....3-42
3-24. 270-E-1 Neutralization Tank....3-43

TABLES

1-1. Risk Rankings for IMUSTs Based on ASA/SAR Documents....1-5
1-2. Risk Rankings for IMUSTs Based on Risk Assessment....1-8

ACRONYMS

ASA	auditable safety analysis
BHI	Bechtel Hanford, Inc.
DOE	U.S. Department of Energy
ECN	Engineering Change Notice
ERC	Environmental Restoration Contractor
IMUSTs	inactive miscellaneous underground storage tanks
ITS	in-tank solidification (unit)
PDD	process distillate discharge
PUREX	Plutonium-Uranium Extraction [Facility/Plant]
RARA	Radiation Area Remedial Action
REDOX	Reduction-Oxidation [Facility/Plant]
RPP	River Protection Project
S&M	surveillance and maintenance
SAR	safety analysis report
TBP	tributyl phosphate
UNH	uranyl nitrate hexahydrate
WHC	Westinghouse Hanford Company
WIDS	Waste Information Data System

METRIC CONVERSION CHART

Into Metric Units			Out of Metric Units		
If You Know	*Multiply By*	*To Get*	*If You Know*	*Multiply By*	*To Get*
Length			**Length**		
inches	25.4	millimeters	millimeters	0.039	inches
inches	2.54	centimeters	centimeters	0.394	inches
feet	0.305	meters	meters	3.281	feet
yards	0.914	meters	meters	1.094	yards
miles	1.609	kilometers	kilometers	0.621	miles
Area			**Area**		
sq. inches	6.452	sq. centimeters	sq. centimeters	0.155	sq. inches
sq. feet	0.093	sq. meters	sq. meters	10.76	sq. feet
sq. yards	0.836	sq. meters	sq. meters	1.196	sq. yards
sq. miles	2.6	sq. kilometers	sq. kilometers	0.4	sq. miles
acres	0.405	hectares	hectares	2.47	acres
Mass (weight)			**Mass (weight)**		
ounces	28.35	grams	grams	0.035	ounces
pounds	0.454	kilograms	kilograms	2.205	pounds
ton	0.907	metric ton	metric ton	1.102	ton
Volume			**Volume**		
teaspoons	5	milliliters	milliliters	0.033	fluid ounces
tablespoons	15	milliliters	liters	2.1	pints
fluid ounces	30	milliliters	liters	1.057	quarts
cups	0.24	liters	liters	0.264	gallons
pints	0.47	liters	cubic meters	35.315	cubic feet
quarts	0.95	liters	cubic meters	1.308	cubic yards
gallons	3.8	liters			
cubic feet	0.028	cubic meters			
cubic yards	0.765	cubic meters			
Temperature			**Temperature**		
Fahrenheit	subtract 32, then multiply by 5/9	Celsius	Celsius	multiply by 9/5, then add 32	Fahrenheit
Radioactivity			**Radioactivity**		
picocuries	37	millibecquerel	millibecquerels	0.027	picocuries

1.0 INTRODUCTION

1.1 OVERVIEW

This document addresses 23 inactive miscellaneous underground storage tanks (IMUSTs) located in the 200 East and 200 West Areas of the Hanford Site that are currently managed by Bechtel Hanford, Inc. (BHI). This document presents the Environmental Restoration Contractor (ERC) management plan for these IMUSTs and contains the following information:

- Provides a brief summary of the background and safety issues associated with the ERC IMUSTs
- Identifies each IMUST managed by BHI
- Provides a general description of each IMUST (including management status, operational history, and isolation/stabilization status)
- Identifies relative risk rankings for each IMUST
- Identifies 14 IMUSTs with completed facility safety analysis documentation
- Presents a risk assessment for nine of the IMUSTs that lack facility safety analysis documentation (as defined in Appendix A).

1.2 PURPOSE

This management plan was prepared to determine the controls necessary for each IMUST to ensure safety during the surveillance and maintenance (S&M) period.

1.3 BACKGROUND OF BHI-01018

In Section 4.0 of BHI-01018, Rev. 0, BHI committed to prepare or update safety analysis documents to address the safety issues for eight BHI-managed IMUSTs (i.e., tanks 216-BC-201, 241-B-361, 241-U-361, 241-T-361, and 244-UR, and vault tanks 244-UR-001, 244-UR-002, 244-UR-003, and 244-UR-004).

After Rev. 0 was issued and prior to the issuance of Rev. 1, two additional IMUSTs were transferred to BHI (216-TY-201 and 270-W), and an additional IMUST (216-BY-201) was transferred from the River Protection Project (RPP) (formerly known as Tank Waste Remediation System) to BHI. In addition, the U.S. Department of Energy (DOE) directed that the 244-UR vault tanks be transferred from BHI to the RPP.

As a result of the completed or near-term transfers of IMUSTs, DOE directed BHI to prepare a risk assessment for the seven remaining IMUSTs that would be under BHI management.

Since the issuance of Rev. 1, two additional IMUSTs (200-E-58 and 270-E-1) have been added to BHI's management responsibility under the ERC scope of work. Appendix A presents the details of these transfers. Appendix B of this document contains the risk assessments (and the methodology used) for the nine remaining IMUSTs: 216-BC-201, 216-BY-201, 216-TY-201, 241-B-361, 241-T-361, 241-U-361, 270-W, 200-E-58, and 270-E-1. Also the risk assessments of the 276-S-141 and 276-S-142 Hexone tanks have been updated to reflect remedial action taken in 2002.

1.4 BACKGROUND OF IMUST SAFETY ISSUES

In the early 1990s, potential safety and tank integrity issues were identified for 50 miscellaneous inactive underground tanks that were formerly associated with the following plutonium and uranium separations and waste management activities:

- Settling solids before disposal of supernatant in cribs and/or reverse wells
- Neutralizing acidic process wastes before crib disposal
- Receiving and processing of single-shell tank waste for uranium recovery operations
- Collecting water that intruded into diversion boxes and transfer pipeline encasements, and any leakage that occurred during waste transfer operations
- Waste handling
- Process experimentation.

An engineering study of these 50 tanks (later termed as "IMUSTs") was published in 1994 by Westinghouse Hanford Company (WHC) in *Engineering Study for 50 Miscellaneous Inactive Underground Radioactive Waste Tanks Located at the Hanford Site* (WHC 1994a). The engineering study compiled available data and provided a preliminary assessment of the potential safety hazards associated with the tanks. Chemical safety hazards (i.e., hydrogen buildup, ferrocyanide explosion, organic salt reactivity, flammability of tank contents, and emission of vapors) were addressed and qualitatively evaluated based on available tank information. Other hazards associated with tank/vault integrity, criticality safety, radiological protection, and heat generation were also addressed. The engineering study also provided a qualitative risk ranking for the 50 IMUSTs.

Shortly thereafter, WHC published a safety issue resolution strategy plan (WHC 1994b) that described the approach to be used to identify, confirm, and resolve the IMUST safety issues for the 50 tanks. The strategy plan identified a number of major tasks, contingent tasks, and schedules that were intended to verify the presence or absence of safety issues for the tanks. The

WHC plan also established a qualitative risk-ranking approach that was partly based on quantitative (i.e., algorithm-based) calculations to prioritize the order in which the tanks would be addressed. Use of the strategy plan approach generally resulted in higher risk rankings for each of the tanks than those established in the engineering study.

1.5 DEVELOPMENT OF RISK RANKINGS

The current ownership/status of the 23 tanks addressed in this document is provided in Appendix A.

1.5.1 ASA/SAR Risk Rankings

BHI has completed auditable safety analysis (ASA) or safety analysis report (SAR) documents that identify, research, and evaluate the IMUST safety issues for 14 tanks (241-WR vaults [9 total], and tanks 241-CX-70, 241-CX-71, 241-CX-72, 276-S-141, and 276-S-142).

Inventory data and historical information contained within the ASA/SARs were evaluated by chemical engineering staff and former operations staff and were used as the basis for the three-tier qualitative risk rankings given in Table 1-1 (i.e., low, moderate, and high). The ASA and SAR documents have received DOE final approval.

Based on experience gained when preparing the ASA and SAR documents and preparing the risk assessments for the IMUSTs, BHI concluded that the prior risk rankings established by WHC overstated both the hazards and the risks associated with the tanks for continued S&M. Investigation to date has identified both translational and typographical errors that resulted in questionable or erroneous data and rankings.

The risk rankings presented in Table 1-1 have not been altered (with the exception of tanks 276-S-141 and 276-S-142) from the rankings presented in BHI-01018, Rev. 1. The risk ranking for these tanks are reduced based on interim closure action, which consists of grout fill. Table 1-1 presents the tanks in the order in which they are presented in the document and does not represent a priority-basis listing. For each of these tanks, the associated ASA or SAR risk rankings concluded that existing surveillance and administrative requirements under the Radiation Area Remedial Action (RARA) Program are adequate to ensure near- and long-term safety under inactive S&M.

1.5.2 Risk Assessment Risk Rankings

BHI has prepared risk assessments for the nine remaining IMUSTs (216-BC-201, 216-BY-201, 216-TY-201, 241-B-361, 241-U-361, 241-T-361, 270-W, 200-E-58, and 270-E-1) that are under BHI management. These risk assessments are provided in Appendix B.

The best available inventory for the tanks (developed in Appendix B) was evaluated by a team of chemical engineering staff and former operations staff and was used as the basis for the five-tier

qualitative risk rankings presented in Table 1-2 (as formulated in Appendix B). Table 1-2 presents the tanks in the order in which they are presented in the document and does not represent a priority-basis listing. Appendix B describes the evaluation of the data extremes in determining a reasonable inventory, as well as the methodology used as a basis for assigning "N/A (not applicable)," "none," "low," "medium," or "high" risk rankings.

For each of these tanks, the BHI assessment concluded that continued S&M in accordance with the RARA Program and procedures is adequate to ensure near- and long-term safety under inactive S&M.

Table 1-1. Risk Rankings for IMUSTs Based on ASA/SAR Documents. (3 Pages)

Tank Row #	Tank Number	Tank Type	Relative Ranking on Potential Safety Issues [a,b]									Sludge Volume (gal)[c]	Liquid Volume (gal)[c]	Total Volume (gal)[c]	Notes
			H_2	FeCN	Org	Heat	Crit	Flam	Vap	Leak	Rad				
1	241-WR-001	Vault	L	L	L	L	L	L	L	L	L	0	0	0	Risk rankings and volume data based on BHI-01157 (BHI 2001b). Tank has been isolated.
	241-WR-001 Sump/Pit	--	L	L	L	L	L	L	L	H	L	0	14,000	14,000	Risk rankings and volume data based on BHI-01157 (BHI 2001b). Sump/pit is basically open tank; with exception of leak potential, the sump/pit rankings are the same as the tank. Sump/pit has been isolated.
2	241-WR-002	Vault	L	L	L	L	L	L	L	L	L	0	0	0	Risk rankings and volume data based on BHI-01157 (BHI 2001b). Tank has been isolated.
	241-WR-002 Sump/Pit	--	L	L	L	L	L	L	L	H	L	0	35,000 to 70,000	35,000 to 70,000	Risk rankings and volume data based on BHI-01157 (BHI 2001b). Sump/pit is basically open tank; with exception of leak potential, the sump/pit rankings are the same as the tank. Sump/pit has been isolated.
3	241-WR-003	Vault	L	None	L	L	L	L	L	L	L	0	0	0	Risk rankings and volume data based on BHI-01157 (BHI 2001b). Tank has been isolated.
	241-WR-003 Sump/Pit	--	--	--	--	--	--	--	--	L	--	0	<25	<25	Risk rankings and volume data based on BHI-01157 (BHI 2001b). Sump/pit has been isolated.
4	241-WR-004	Vault	L	None	L	L	L	L	L	L	L	0	0	0	Risk rankings and volume data based on BHI-01157 (BHI 2001b). Tank has been isolated.
	241-WR-004 Sump/Pit	--	--	--	--	--	--	--	--	L	--	0	<25	<25	Risk rankings and volume data based on BHI-01157 (BHI 2001b). Sump/pit has been isolated.

Table 1-1. Risk Rankings for IMUSTs Based on ASA/SAR Documents. (3 Pages)

Tank Row #	Tank Number	Tank Type	Relative Ranking on Potential Safety Issues [a,b]									Sludge Volume (gal)[c]	Liquid Volume (gal)[c]	Total Volume (gal)[c]	Notes
			H_2	FeCN	Org	Heat	Crit	Flam	Vap	Leak	Rad				
5	241-WR-005	Vault	L	None	L	L	L	L	L	L	L	0	0	0	Risk rankings and volume data based on BHI-01157 (BHI 2001b). Tank has been isolated.
	241-WR-005 Sump/Pit	--	--	--	--	--	--	--	--	L	--	0	0	0	Risk rankings and volume data based on BHI-01157 (BHI 2001b). Sump/pit has been isolated.
6	241-WR-006	Vault	L	None	L	L	L	L	L	L	L	0	0	0	Risk rankings and volume data based on BHI-01157 (BHI 2001b). Tank has been isolated.
	241-WR-006 Sump/Pit	--	--	--	--	--	--	--	--	L	--	0	0	0	Risk rankings and volume data based on BHI-01157 (BHI 2001b). Sump/pit has been isolated.
7	241-WR-007	Vault	L	None	L	L	L	L	L	L	L	0	0	0	Risk rankings and volume data based on BHI-01157 (BHI 2001b). Tank has been isolated.
	241-WR-007 Sump/Pit	--	--	--	--	--	--	--	--	L	--	0	0	0	Risk rankings and volume data based on BHI-01157 (BHI 2001b). Sump/pit has been isolated.
8	241-WR-008	Vault	L	None	L	L	L	L	L	L	L	0	0	0	Risk rankings and volume data based on BHI-01157 (BHI 2001b). Tank has been isolated.
	241-WR-008 Sump/Pit	--	--	--	--	--	--	--	--	L	--	0	0	0	Risk rankings and volume data based on BHI-01157 (BHI 2001b). Sump/pit has been isolated.
9	241-WR-009	Vault	L	None	L	M	L	L	L	H	L	0	23,000	23,000	Risk rankings and volume data based on BHI-01157 (BHI 2001b). Tank has been isolated.
	241-WR-009 Sump/Pit	--	--	--	--	--	--	--	--	L	--	0	0	0	Risk rankings and volume data based on BHI-01157 (BHI 2001b). Tank sump/pit is isolated.

Table 1-1. Risk Rankings for IMUSTs Based on ASA/SAR Documents. (3 Pages)

Tank Row #	Tank Number	Tank Type	Relative Ranking on Potential Safety Issues [a,b]									Sludge Volume (gal)[c]	Liquid Volume (gal)[c]	Total Volume (gal)[c]	Notes
			H_2	FeCN	Org	Heat	Crit	Flam	Vap	Leak	Rad				
10	241-CX-70	Waste Handling	L	L	L	L	L	L	L	L	L	0	0	0	Risk rankings and volume data based on analysis contained in BHI-01173 (BHI 2000). Tank has been isolated and emptied.
11	241-CX-71	Neutralization	L	None	M	L	L	L	L	L	L	930	0	930	Risk rankings based on analysis contained in BHI-01173 (BHI 2000); volume data cited from WHC-EP-0775 (WHC 1994b). Tank has been isolated and capped with grout.
12	241-CX-72	Experimental	L	None	M	M	L	L	L	L	L	650	0	650	Risk rankings based on analysis contained in BHI-01173 (BHI 2000); volume data cited from WHC-EP-0775 (WHC 1994b). Tank has been isolated and capped with grout.
13	276-S-141	Recovery Storage	None	L	L	L	None	None	None	None	L	130	None	130	Revised based on interim closure which consists of grout fill (USQ determination 0200W-US-0217-02).
14	276-S-142	Recovery Storage	None	L	L	L	None	None	None	None	L	130	None	130	Revised based on interim closure which consists of grout fill (USQ determination 0200W-US-0217-02).

[a] Relative rankings: H = high; M = moderate; L = low; NA = not applicable.
[b] Issue abbreviations:

H_2 = hydrogen generation and buildup
FeCN = ferrocyanide reactivity
Org = organic salt reactivity
Heat = high heat
Crit = criticality
Flam = flammability
Vap = emission of radioactive or toxic vapors
Leak = leak potential
Rad = radioactivity.

[c] Volumes have been rounded to the nearest 10 gal.

Table 1-2. Risk Rankings for IMUSTs Based on Risk Assessment. (2 Pages)

Tank Row #	Tank Number	Tank Type	Relative Ranking on Potential Safety Issues [a,b]									Sludge Volume (gal)[c]	Liquid Volume (gal)[c]	Total Volume (gal)[c]	Notes
			H_2	FeCN	Org	Heat	Crit	Flam	Vap	Leak	Rad				
1	216-BC-201	Siphon	None	None	None	L	None	None	L	L	L	0 to 1,010	0 to 11,060	0 to 11,060	Risk rankings and volume data based on the risk assessment methodology, as documented in Appendix B. Tank has been isolated.
2	216-BY-201	Siphon	None	None	None	L	None	None	L	L	L	0 to 750	0 to 8,230	0 to 8,230	Risk rankings and volume data based on the risk assessment methodology, as documented in Appendix B. Tank has been isolated.
3	216-TY-201	Siphon	None	None	None	L	None	None	L	L	L	0 to 750	0 to 8,230	0 to 8,230	Risk rankings and volume data based on the risk assessment methodology, as documented in Appendix B. Tank has been isolated.
4	241-B-361	Settling	None	N/A	N/A	L	L	None	L	L	L	20,680	0	20,680	Risk rankings and volume data based on the risk assessment methodology, as documented in Appendix B. Tank has been isolated.
5	241-U-361	Settling	None	N/A	None	L	None	None	L	L	L	27,730	100	27,830	Risk rankings and volume data based on the risk assessment methodology, as documented in Appendix B. Tank has been isolated.
6	241-T-361	Settling	None	N/A	N/A	L	L	None	L	L	L	24,500	0	24,500	Risk rankings and volume data based on the risk assessment methodology, as documented in Appendix B. Tank has been isolated.

Table 1-2. Risk Rankings for IMUSTs Based on Risk Assessment. (2 Pages)

Tank Row #	Tank Number	Tank Type	Relative Ranking on Potential Safety Issues [a,b]									Sludge Volume (gal)[c]	Liquid Volume (gal)[c]	Total Volume (gal)[c]	Notes
			H_2	FeCN	Org	Heat	Crit	Flam	Vap	Leak	Rad				
7	270-W	Neutralization Tank	None	N/A	None	L	None	None	L	L	L	0 to 3,780	0 to 3,780	0 to 3,780	Risk rankings and volume data based on the risk assessment methodology, as documented in Appendix B. Tank has been isolated.
8	200-E-58	Neutralization Tank	None	N/A	None	L	None	None	L	L	L	17,034	11,356	28,350	Risk rankings and volume data based on the risk assessment methodology, as documented in Appendix B. Tank has been isolated.
9	270-E-1	Neutralization Tank	None	N/A	None	L	None	None	L	L	L	<14,400	<322	<14,762	Risk rankings and volume data based on the risk assessment methodology, as documented in Appendix B. Tank has been isolated.

[a] Relative rankings: H = high; M = moderate; L = low; N/A = not applicable.
[b] Issue abbreviations:

H_2 = hydrogen generation and buildup
FeCN = ferrocyanide reactivity
Org = organic salt reactivity
Heat = high heat
Crit = criticality
Flam = flammability
Vap = emission of radioactive or toxic vapors
Leak = leak potential
Rad = radioactivity.

[c] Volumes have been rounded to the nearest 10 gal.

2.0 IMUST SAFETY ISSUES

A brief discussion of the following potential safety issues associated with the IMUSTs is contained in this section:

- Hydrogen generation
- Ferrocyanide reactivity
- Organic salt reactivity
- High heat
- Criticality
- Flammability
- Noxious vapor emissions
- Leak potential
- Radiological hazards.

Each of these safety issues was addressed and the potential risk ranking assigned by a team of chemical engineering staff and former operations staff, as described in Section 1.5.

2.1 HYDROGEN GENERATION AND BUILDUP

Hydrogen generation and buildup is a potential safety issue for the IMUSTs because of radiolysis and other chemicals reactions. If IMUSTs are hermetically sealed (and hydrogen gas was being generated), the hydrogen could build up to flammable concentrations that could be ignited if an ignition source were present. When the IMUSTs are not well sealed, hydrogen can diffuse from tanks or be removed by atmospheric pumping.

2.2 FERROCYANIDE REACTIVITY

Ferrocyanide reactivity is a potential safety issue for the IMUSTs that were connected to the ferrocyanide process flow path. Although ferrocyanides are stable in solution, an explosion risk exists at elevated temperatures in the presence of oxidizers (e.g., nitrates). Low tank temperatures and the lack of heat from radionuclide decay preclude potential ferrocyanide reactions. Wastes must contain >8% ferrocyanide content, be dry, and exceed 482°F to pose any risk.

2.3 ORGANIC SALT REACTIVITY

Organic salt reactivity is a potential safety issue for the IMUSTs that could contain organic salts. If an exothermic reaction of the organic salts is sufficient to initiate combustion, a release of radionuclides might occur. Three parameters must be met to pose a risk due to organic salt

reaction: the total organic carbon must be >3%, the moisture level must be <20%, and the tank temperature must exceed 185°F.

2.4 HIGH HEAT

High heat transients are a safety concern from two perspectives: (1) structural damage to tanks constructed of concrete, and (2) a prerequisite condition for either ferrocyanide or organic salt reactions. If the cyclic temperature of the concrete exceeds 350°F, the concrete could be damaged, contributing to leak or release potential. If the temperature exceeds 185°F, one of three requisite parameters for organic salt reaction is met. If the temperature exceeds 482°F, one of the requisite parameters for ferrocyanide reactions is met.

2.5 CRITICALITY

Criticality is a potential safety issue for IMUSTs that contain fissionable materials. The potential for criticality is dependent upon a number of factors, including (1) the amount and concentration of fissionable isotopes, (2) the amount of moderating material, (3) the quantities and nuclear properties of other constituents in terms of neutron absorption and neutron scattering, (4) the distribution of the constituents in the waste, and (5) the geometric shape of the waste or waste container.

2.6 FLAMMABILITY

The presence of organic solvents (e.g., kerosene) or flammable gas mixtures (in addition to hydrogen) in IMUST vapor spaces is a potential safety issue for IMUSTs. It is recognized that hydrogen is a flammable gas and that organics subject to elevated temperatures may volatize and contribute to a flammable gas mixture. If flammable gases are produced and build up to the lower explosive limit concentration, these gases can be ignited if an ignition source and oxygen are present.

2.7 NOXIOUS VAPOR EMISSIONS

Noxious vapor emissions are a potential worker safety issue for IMUSTs that contain volatile organic and inorganic materials or produce flammable/explosive vapors. If enough noxious vapors are produced and released from the tank, the vapors can produce a hazard for workers near the IMUSTs or during entry. Vapor emissions are related to hydrogen generation, the possible degradation of ferrocyanide compounds, and the existence of organics in the IMUSTs. Vapor emissions may be related to hydrogen generation because the chemical reactions that produce hydrogen also produce noxious gases in the waste tanks.

2.8 LEAK POTENTIAL

A safety issue under consideration is the potential for tank leakage, which is an environmental concern. Stainless- or carbon-steel tanks may corrode, or concrete tanks or vaults may degrade as a result of exposure to hazardous substances or harsh environmental conditions.

2.9 RADIOLOGICAL HAZARDS

Health physics and radiological protection are concerned with materials emitting ionizing radiation and its effect upon personnel. Radiological hazard is an operational concern to workers rather than a safety issue.

3.0 DESCRIPTION AND RISK RANKINGS FOR ERC IMUSTS

This section contains the following types of information regarding the IMUSTs:

- Identification of each IMUST currently managed by BHI
- General information (e.g., location, construction, waste information, isolation/stabilization status, and inventory) for each tank
- Identification of IMUSTs addressed in DOE-approved ASA and SARs
- Reference to the risk assessment for seven IMUSTs
- Maps identifying the location of each IMUST within the 200 Areas of the Hanford Site
- Sketches of each IMUST.

3.1 216-BC-201 SIPHON TANK

Location

The 216-BC-201 siphon tank is located approximately 500 ft south of Route 4S, which is south of the 200 East Area. The tank is north of and adjacent to the 216-B-14 through 216-B-19 Cribs. The top of the siphon tank is located approximately 7 ft below grade, and the top of the tank risers is approximately 2 ft below grade. The location of the siphon tank is shown in Figure 3-1.

Construction

As shown in Drawing H-2-2770, Rev. 1, the siphon tank is a rectangular-shaped horizontal tank with exterior dimensions of 27 ft long, 10.75 ft wide, and 9.5 ft deep. The tank's normal working capacity is approximately 11,000 gal. The siphon tank is an unlined, reinforced-concrete tank with walls, floor, and top that are 1 ft thick. Two 4-in. inlet lines penetrate the tank and a Miller siphon in the bottom of the tank empties to a 14-in. discharge line. The top of the tank has two manholes, two 8-in. vent risers, and one 4-in. riser. In addition, two 2-in. risers penetrate the side of the tank. The siphon tank is shown in Figure 3-2.

Waste Information

From 1956 to 1957, the siphon tank received scavenged waste that originated from waste streams associated with the former uranium (metal) recovery operations conducted at U Plant. The U Plant waste streams were initially sent to the tank farms for storage. These wastes were treated in the tank farms with ferrocyanide to precipitate metals (including cesium) as part of the tank space recovery campaign being conducted during this timeframe. The supernatant from these treated wastes was then transferred to the siphon tank for discharge to cribs.

The 216-BC-201 siphon tank discharged waste to six different cribs (216-B-14 through 216-B-19). As shown in Drawing H-2-2770, the siphon tank received and held wastes until the tank level reached 5.5 ft (approximately 11,000 gal). When this level was reached, the siphon action would begin and discharge the tank wastes to the in-service crib. The siphon action and discharge would stop when the tank level was reduced to 6 in. (approximately 1,000 gal). The siphon arrangement was intended to flood the crib area with a significant amount of liquids at one time, which would result in a more uniform distribution of contaminants throughout the crib-specific retention volume rather than heavy concentrations near the discharge point.

Isolation/Stabilization

Drawing H-2-2908, Rev. 6, indicates that the valve handle extensions and tubes for the gate valves in both of the 4-in. tank inlet lines were removed below grade. Although the drawing does not show valve position, it is likely that the valves were closed prior to removal of the valve handles. Drawing H-2-2770 indicates that each of the five risers were sealed with expanding rubber stoppers and an additional 2 ft of overburden was placed on top of the tank and risers.

Inventory

Historical reviews of reference documents did not identify any documented inventory for this tank. The team evaluation considered various probable levels and concentrations. The potential variance was found not to be significant to the risk conclusions. See Appendix B, Table B-1, for more detailed information.

IMUST Risk Rankings

The siphon tank risk rankings are summarized in Table 1-2. These rankings are based on BHI research and evaluation of drawings and documents. The basis for these rankings is documented in Appendix B, Table B-2.

Required Actions and Schedule

The risk assessment provided in Appendix B addresses the IMUST safety issues for the 216-BC-201 siphon tank. BHI concludes that the RARA Program is adequate to ensure near- and long-term safety of this tank under inactive S&M. Based on this analysis, BHI concludes that no further action is required at this time.

3.2 216-BY-201 SIPHON TANK

Location

The 216-BY-201 siphon tank is located in the northwest portion of the 200 East Area, between the 241-BY tank farm and the 216-B-43 through 216-B-50 Cribs. The top of the siphon tank is located approximately 3 ft below grade on the north end and about 6 ft below grade on the south

end (BHI 1994). A monitoring pit located near the southeast corner of the tank is visible and can be identified by a steel cover. The location of the siphon tank is shown in Figure 3-3.

Construction

Drawing H-2-2604, Rev. 4, indicates that the siphon tank is a rectangular-shaped horizontal tank with exterior dimensions of 41.3 ft long, 6.3 ft wide, and 9.2 ft deep. The tank's normal working capacity is approximately 8,200 gal. The siphon tank is an unlined, reinforced-concrete tank with walls and top that are 8 in. thick and a floor that is 1 ft thick. One 4-in. inlet line penetrates the tank and a Miller siphon in the bottom of the tank empties to a 14-in. discharge line. The top of the tank has two manholes, one 4-in. vent riser, one 6-in. riser, and one 2-in. line from former water monitor. The siphon tank is shown in Figure 3-4.

Waste Information

From 1954 to 1957, the siphon tank received scavenged waste that originated from waste streams associated with the tributyl phosphate (TBP) acid waste from U Plant. The U Plant waste streams were initially sent to the tank farms for storage. These wastes were later treated in the tank farms with potassium ferrocyanide to precipitate cesium as part of the tank space recovery campaign being conducted during this timeframe. The supernatant from these treated wastes was then transferred to the siphon tank for discharge to cribs. From 1965 to 1974, the siphon tank received waste storage tank condensate from the in-tank solidification (ITS)-1 unit in the 241-BY tank farm.

The 216-BY-201 siphon tank discharged waste to eight different cribs (216-B-43 through 216-B-50). As shown in Drawing H-2-2604, the siphon tank received and held wastes until the tank level reached 5.5 ft (approximately 8,200 gal). When this level was reached, the siphon action would begin and discharge the tank wastes to the in-service crib. The siphon action and discharge would stop when the tank level was reduced to 6 in. (approximately 750 gal). The siphon arrangement was intended to flood the crib area with a significant amount of liquids at one time, which would result in a more uniform distribution of contaminants throughout the crib-specific retention volume instead of heavy concentrations near the discharge point.

Isolation/Stabilization

Drawing H-2-2604 (which has no associated Engineering Change Notice [ECN]) does not give any isolation details; however, the siphon tank is not discernible from the surface except for a sign stating "Restricted Access – 216-BY-201" (Waste Information Data System [WIDS]).

Inventory

Historical reference reviews did not identify any documented inventory for this tank. The team evaluation considered various probable levels and concentrations. The potential variance was found not to be significant to the risk conclusions. See Appendix B, Table B-3, for more detailed information.

IMUST Risk Rankings

The siphon tank risk rankings are summarized in Table 1-2. These rankings are based on BHI research and evaluation of drawings and documents. The basis for these rankings is documented in Appendix B, Table B-4.

Required Actions and Schedule

The risk assessment provided in Appendix B addresses the IMUST safety issues for the 216-BY-201 siphon tank. BHI concludes that the RARA Program is adequate to ensure near- and long-term safety of this tank under inactive S&M. Based on this analysis, BHI concludes that no further action is required at this time.

3.3 216-TY-201 SIPHON TANK

Location

The 216-TY-201 siphon tank is east of the 241-TY tank farm, approximately 215 ft east of Camden Avenue, and approximately 500 ft north of 22nd Street. The location of the siphon tank is shown in Figure 3-5.

Construction

Drawing H-2-2670, Rev. 1, indicates that the siphon tank is a rectangular horizontal tank with exterior dimensions of 27 ft long, 10 ft wide, and 9.5 ft deep. The tank's normal working capacity is approximately 8,200 gal. The siphon tank is an unlined, reinforced-concrete tank with walls, floor, and top that are 1 ft thick. Two 3-in. inlet lines penetrate the tank (one inlet line was capped spare) and a Miller siphon in the bottom of the tank empties to a 14-in. discharge line. The top of the tank has two manholes, one 4-in. vent riser, and two 8-in. vent risers. The siphon tank is shown in Figure 3-6.

Waste Information

From 1953 to 1955, the siphon tank received first-cycle scavenged waste that originated from waste streams associated with the former fuel separations operations conducted at T Plant. The T Plant waste streams were initially sent to the tank farms for storage. The wastes were later treated in the tank farms with ferrocyanide to precipitate cesium as part of the tank space recovery campaign being conducted during this timeframe. The supernatant from these treated wastes was then transferred to the siphon tank for discharge to cribs. After 1955, the siphon tank received 300 Area laboratory wastes from the Pacific Northwest Laboratory's 340 Building (via tank truck) and wastes from the 221-T Building via the 241-T-111 and 241-T-112 single-shell tanks.

The 216-TY-201 siphon tank discharged waste to three different cribs (216-T-26 through 216-T-28). As shown in Drawing H-2-2670, the siphon tank received and held wastes until the

tank level reached 5.5 ft (approximately 8,200 gal). When this level was reached, the siphon action would begin and discharge the tank wastes to the in-service crib. The siphon action and discharge would stop when the tank level was reduced to 6 in. (approximately 750 gal). The siphon arrangement was intended to flood the crib area with a significant amount of liquids at one time, which would result in a more uniform distribution of contaminants throughout the crib-specific retention volume rather than heavy concentrations near the discharge point.

Isolation/Stabilization

Drawing H-2-2670 (which has no associated ECN) does not provide isolation details; however, the WIDS database states that the vent filters (for the risers) have been removed and the pipes have been capped. The siphon tank is below grade with the exception of three vent risers protruding above ground (as documented in WIDS).

Inventory

Historical reference reviews did not identify any documented inventory for this tank. The team evaluation considered various probable levels and concentrations. The potential variance was found not to be significant to the risk conclusions. See Appendix B, Table B-5, for more detailed information.

IMUST Risk Rankings

The siphon tank risk rankings are summarized in Table 1-2. These rankings are based on BHI research and evaluation of drawings and documents. The basis for these rankings is documented in Appendix B, Table B-6.

Required Actions and Schedule

The risk assessment provided in Appendix B addresses the IMUST safety issues for the 216-TY-201 siphon tank. BHI concludes that the RARA Program is adequate to ensure near- and long-term safety of this tank under inactive S&M. Based on this analysis, BHI concludes that no further action is required at this time.

3.4 241-B-361 SETTLING TANK

Location

The 241-B-361 settling tank is located approximately 900 ft northeast of the 221-B Building in the 200 East Area. The tank is located approximately 100 ft east of Baltimore Road and 100 ft south of the 216-B-5 reverse well. The top of the settling tank is located 6 ft below grade. The top of the nine tank risers are located slightly above grade. The location of the settling tank is shown in Figure 3-7.

Construction

Drawing W-72902, Rev. 16, shows the 241-B-361 settling tank as a domed, unlined, reinforced-concrete tank with exterior dimensions of 20 ft diameter by approximately 19 ft in height, with 5- to 6-in.-thick walls, floor, and dome. The tank's normal working capacity is approximately 32,000 gal. The tank has one 3-in. inlet and one 3-in. outlet that penetrate the sides of the tank. The tank dome has a 42-in. manhole with a central 4-in. vent riser in addition to four 12-in. risers and four 4-in. risers located on the periphery of the tank dome. The 241-B-361 settling tank is shown in Figure 3-8.

Waste Information

From 1945 to 1947, the 241-B-361 settling tank received low-level, low-salt, alkaline radioactive liquid wastes from cell 5-6 washings in the 221-B Canyon and additional wastes from the bismuth phosphate process in the 224-B Building. After a period of settling, the low-level waste overflowed to the 216-B-5 reverse well.

Isolation/Stabilization

Drawings H-2-71677 (Rev. 1), H-2-71657 (Rev. 0), and H-2-1031 (Rev. 16) indicate that the inlet line to 241-B-361 was cut and blanked and the tank risers were blind-flanged and gasketed as part of tank isolation Project B-231. Drawing SK-2-4662, Rev. 1, shows that the outlet was to be blanked; however, this could not be verified on as-built Drawing H-2-71677.

Inventory

The best available inventory information is provided in Appendix B, Table B-7. Based on a level measurement, it is estimated that approximately 21,000 gal of sludge and no supernatant remain in tank 241-B-361. Because of limited sampling, the concentrations and precise volume may vary. The team evaluation considered various probable levels and concentrations. The potential variance was found not to be significant to the risk conclusions.

IMUST Risk Rankings

The settling tank risk rankings are summarized in Table 1-2. These rankings are based on BHI research and evaluation of drawings and documents. The basis for these rankings is documented in Appendix B, Table B-8.

Required Actions and Schedule

The risk assessment provided in Appendix B addresses the IMUST safety issues for the 241-B-361 settling tank. BHI concludes that the RARA Program is adequate to ensure near- and long-term safety of this tank under inactive S&M. Based on this analysis, BHI concludes that no further action is required at this time.

3.5 241-U-361 SETTLING TANK

Location

The 241-U-361 settling tank is located approximately 800 ft southwest of the 221-U Building, and approximately 100 ft east of the 216-U-1 and 216-U-2 Cribs. The top of the settling tank is located 6 ft below grade. The top of the tank risers are located slightly above grade. The location of the settling tank is shown in Figure 3-9.

Construction

Drawing W-72902 shows the 241-U-361 settling tank as a domed, unlined, reinforced-concrete tank with exterior dimensions of 20 ft in diameter by approximately 19 ft in height, with 5- to 6-in.-thick walls, floor, and dome. The tank's normal working capacity is approximately 32,000 gal. The tank has one 3-in. inlet and one 3-in. outlet that penetrate the sides of the tank. The tank dome has a 42-in. manhole with a 4-in. vent riser in addition to four 12-in. risers and four 4-in. risers located on the periphery of the tank dome. The tops of the risers are located above grade. The 241-U-361 settling tank is shown in Figure 3-8.

Waste Information

From 1951 to 1957, the 241-U-361 settling tank received low-level wastes from the uranium recovery process in 221-U and decontamination wastes from 224-U. The waste streams routed through the settling tank included cell drainage from the 221-U canyon, uranium trioxide conversion waste, 276-U solvent scrubbing waste, and uranium trioxide equipment decontamination liquids. After a period of settling, the tank overflowed to the 216-U-1 and 216-U-2 Cribs.

Isolation/Stabilization

Drawing H-2-71676, Rev. 1, indicates that the inlet line to the tank 241-U-361 was cut and capped and the tank inlet line was plugged. As also shown in Drawing H-2-71676, the tank outlet line to the 216-U-1 and 216-U-2 Cribs was cut and plugged. Drawings H-2-71676, H-2-71657, and H-2-71632 (Rev. 1) indicate that the tank risers were blind-flanged and gasketed as part of tank isolation Project B-231.

Inventory

The best available inventory information is provided in Appendix B, Table B-9. Based on a level measurement it is estimated that approximately 28,000 gal of sludge and 100 gal of supernatant remain in 241-U-361. Because of limited sampling, concentrations and precise volume may vary. The team evaluation considered various probable levels and concentrations. The potential variance was found not to be significant to the risk conclusions.

IMUST Risk Rankings

The settling tank risk rankings are summarized in Table 1-2. These rankings are based on BHI research and evaluation of drawings and documents. The basis for these rankings is documented in Appendix B, Table B-10.

Required Actions and Schedule

The risk assessment provided in Appendix B addresses the IMUST safety issues for the 241-U-361 settling tank. BHI concludes that the RARA Program is adequate to ensure near- and long-term safety of this tank under inactive S&M. Based on this analysis, BHI concludes that no further action is required at this time.

3.6 241-T-361 SETTLING TANK

Location

The 241-T-361 settling tank is located approximately 700 ft southwest of the 224-T Building. The top of the settling tank is located 6 ft below grade, and the tops of the tank risers are located slightly above grade. The location of the settling tank is shown in Figure 3-10.

Construction

Drawing W-72902 shows the 241-T-361 settling tank as a domed, unlined, reinforced-concrete tank. The tank has exterior dimensions of 20 ft in diameter by approximately 19 ft in height, with 5- to 6-in.-thick walls, floor, and dome. The tank's normal working capacity is approximately 32,000 gal. The tank has one 3-in. inlet and one 3-in. outlet that penetrate the sides of the tank. The tank dome has a 42-in. manhole with a central 4-in. vent riser, in addition to four 12-in. risers and four 4-in. risers located on the periphery of the tank dome. As shown in Drawing H-2-951, Rev. 1, one of the 4-in. risers was also used as an inlet to the tank. The 241-T-361 settling tank is shown in Figure 3-8.

Waste Information

From 1944 to 1947, the 241-T-361 settling tank received low-level, low-salt alkaline wastes from 221-T and 224-T. From 1946 to 1947, the settling tank received wastes specifically from 221-T canyon cell washing activities at T Plant. After a period of settling, the tank overflowed to the 216-T-3 reverse well (1945-1946) and later to the 216-T-6 Crib (1946-1947).

Isolation/Stabilization

Drawings H-2-71676 and H-2-951 indicate that both tank inlet lines were blind-flanged and plugged. The tank outlet to the 216-T-3 reverse well was also blind-flanged and plugged. Drawings H-2-71676, H-2-71657, and H-2-71632 indicate that the periphery tank risers were

blind-flanged and gasketed, and the 4-in. central vent riser was cut and capped below grade as part of the tank isolation Project B-231.

Inventory

The best available inventory information is provided in Appendix B, Table B-11. Based on a level measurement, it is estimated that approximately 25,000 gal of sludge and no supernatant remain in 241-T-361. Because of limited sampling, the concentrations and precise volume may vary. The team evaluation considered various probable levels and concentrations. The potential variance was found not to be significant to the risk conclusions.

IMUST Risk Rankings

The settling tank risk rankings are summarized in Table 1-2. These rankings are based on BHI research and evaluation of drawings and documents. The basis for these rankings is documented in Appendix B, Table B-12.

Required Actions and Schedule

The risk assessment provided in Appendix B addresses the IMUST safety issues for the 241-T-361 settling tank. BHI concludes that the RARA Program is adequate to ensure near- and long-term safety of this tank under inactive S&M. Based on this analysis, BHI concludes that no further action is required at this time.

3.7 241-WR VAULT AND TANKS 241-WR-001, 241-WR-002, 241-WR-003, 241-WR-004, 241-WR-005, 241-WR-006; 241-WR-007, 241-WR-008, AND 241-WR-009

Location

The 241-WR vault is located approximately 200 ft northeast of the 221-U Building. The top of the vault is located about 1 ft above grade. The location of the 241-WR vault is shown in Figure 3-11.

Construction

The 241-WR vault is a two-level, underground concrete structure that contains nine process cells. Each process cell is 24 ft wide by 24 ft long and contains a process tank and a small (2 ft by 3 ft by 7-in.-deep) sump. As shown in Drawings H-2-40229 (Rev. 3) and H-2-40230 (Rev. 3), the overall structure has a maximum length of 128 ft, a maximum width of 66 ft, and maximum depth of 48.8 ft. The exterior walls are typically 2 ft thick, with interior cell separating walls varying from 1 to 2 ft in thickness.

The lower level of the vault contains five tanks (241-WR-001 through 241-WR-005), which was known as the radioactive (or "hot side") zone. The lower level is overlain by a pump pit that

contained auxiliary equipment to support vault operations. The upper level contains four tanks (241-WR-006 through 241-WR-009), which was known as the nonradioactive (or "cold side") zone. The 241-WR vault and tanks are shown in Figure 3-12.

Each of the nine tanks is constructed of welded stainless-steel and is 20 ft in diameter by 19.2 ft deep, with dished bottoms and heads. Each tank has a capacity of 50,000 gal.

Waste Information

The 241-WR vault received uranium- and thorium-bearing waste slurries and solutions from the tank farms in preparation for use as a feed material for uranium and thorium recovery operations being conducted at the 221-U Building. Following blending, pH adjustment, and chemical conditioning, the feed material was transferred to the U Plant canyon for uranium (metal) recovery.

The 241-WR vault was used to store uranyl nitrate hexahydrate (UNH), nitric acid, and TBP in support of the uranium recovery operations (1952 through 1958) and stored thorium nitrate solution (1958 through 1976) in support of the Reduction-Oxidation (REDOX) Facility and the Plutonium-Uranium Extraction (PUREX) Facility processes.

Isolation/Stabilization

The isolation of the 241-WR vault was conducted under Project B-231 in the 1984 to 1985 timeframe, as documented on the following drawings: H-2-71669 (Rev. 1), H-2-71605, H-2-71606 (Rev. 2), H-2-71667 (Rev. 1), and H-2-71668 (Rev. 1). All above-ground utilities to the vault (e.g., steam and electricity) have been removed or disconnected. Below-grade exhaust lines from the individual tank cells to the 291-U exhaust duct were cut and plugged with concrete. Essentially all above-grade support facilities were removed, and only the vault structure and below-grade ducts remain. The roof of the vault was sealed with expanded urethane foam with an ultraviolet-resistant sealant to prevent water infiltration.

Inventory

As part of Project B-231, individual tank evaluations (as well as the current tank or sump level measurements) were to be documented on a stabilization evaluation form. As reported in the *Engineering Study for 50 Miscellaneous Inactive Underground Radioactive Waste Tanks Located at the Hanford Site, Washington* (WHC 1994a), these forms were not located for the 241-WR vault, and other records of residual inventories are incomplete. Appendix F of the *U Plant Facility Safety Analysis Report* (BHI 2001b) includes a detailed discussion of the current status and contents of the 241-WR vault tanks, pits, and sumps. As noted therein, the best available information indicates that tank 241-WR-009 contains 23,000 gal, tank 241-WR-001 sump/pit contains 14,000 gal, and tank 241-WR-002 sump/pit contains 35,000 to 70,000 gal of residual waste. The remainder of the tanks and sump/pits contain either minimal inventories (less than 25 gal) or are believed to be empty.

IMUST Risk Rankings

The 241-WR vault tank risk rankings are provided in Table 1-1. These rankings were established based on reasonable engineering judgment and the hazard and safety analysis of the *U Plant Facility Safety Analysis Report* (BHI 2001b). The U Plant SAR has been approved by DOE.

Required Actions and Schedule

The U Plant SAR (BHI 2001b) addressed IMUST safety issues for the 241-WR vault and tanks. It was concluded that continued S&M in accordance with the RARA Program and procedures is adequate to ensure near- and long-term safety of this tank under inactive S&M. Based on this analysis, BHI concludes that no further action is required at this time.

3.8 241-CX-70 PROCESS WASTE HANDLING TANK

Location

The 241-CX-70 process waste-handling tank is located approximately 500 ft east of the 209-E Building and approximately 100 ft south of the former site of the Strontium Semiworks (201-C) Process Facility. The top of the tank is approximately 11 ft below grade, and the top of the tank risers are located slightly above grade. The location of tank 241-CX-70 is shown in Figure 3-13.

Construction

Tank 241-CX-70 is a 30,000-gal-capacity, underground waste-handling tank. The tank consists of an underground concrete shell with a 0.3-in. stainless-steel liner. The tank's interior dimensions are 20 ft in diameter by 15 ft high. The tank's sides and top are constructed of 1-ft-thick concrete, with the tank bottom thickness varying from 2 ft at the edges to 9 in. at the center. Two fill pipes enter the side of the tank. Nine risers extend out of the tank to above grade. Tank 241-CX-70 is shown in Figure 3-14.

Waste Information

Tank 241-CX-70 was built in 1952 to store high-level process waste from REDOX process flow sheet improvement studies being conducted at the Strontium Semiworks (201-C) Facility. Tank 241-CX-70 was used in this capacity until 1957.

Isolation/Stabilization

Residual liquid inventories were removed from tank 241-CX-70 in 1979. From 1987 to 1991, waste removal activities (i.e., sluicing, pumping, and vacuum removal) were conducted to remove the residual sludge. The tank was confirmed empty and clean in 1992, and the two fill pipes entering the tank have been isolated and capped. The nine risers that extend above grade

have been capped. Two wood covers were installed over the tank and shield a former access pit and one of the risers.

Inventory

The *Auditable Safety Analysis for Surveillance and Maintenance of the 241-CX Tank System* (BHI 2000) contains a detailed discussion of the inventory of tank 241-CX-70. The tank is currently empty.

IMUST Risk Rankings

Tank 241-CX-70 risk rankings are provided in Table 1-1. These rankings were established based on reasonable engineering judgment and the hazard and safety analysis (BHI 2000). The 241-CX tank system ASA has been approved by DOE.

Required Actions and Schedule

The 241-CX tank system ASA (BHI 2000) addressed IMUST safety issues for tank 241-CX-70. It was concluded that continued S&M in accordance with the RARA Program and procedures is adequate to ensure near- and long-term safety of this tank under inactive S&M. Based on this analysis, BHI concludes that no further action is required at this time.

3.9 241-CX-71 NEUTRALIZATION TANK

Location

The 241-CX-71 neutralization tank is located approximately 450 ft east of the 209-E Building and approximately 50 ft south of the site of the former Strontium Semiworks (201-C) Facility. The top of the tank is located approximately 3.5 ft below grade, and the top of the tank risers are located slightly above grade. The location of tank 241-CX-71 is shown in Figure 3-13.

Construction

Tank 241-CX-71 is a stainless-steel underground neutralization tank with a capacity of approximately 3,800 gal. The tank is reported to be 9 ft in diameter and 9 ft high. Two risers extend above grade. Drawings of the tank do not exist. A sketch of tank 241-CX-71 is shown in Figure 3-15.

Waste Information

From 1952 to 1957, tank 241-CX-71 was used for the neutralization of acidic waste streams (i.e., hot shop sink wastes, process condensate, and condensate cooling water) that originated in the 201-C Facility. The tank design provided for a period of waste holdup and exposure to crushed limestone to neutralize the acidic portion of the waste streams prior to discharge to the

216-C-1 Crib. Additional limestone was periodically added through a central riser pipe as dissolution of the limestone bed occurred.

Isolation/Stabilization

In 1986, the residual limestone and waste sludge was capped with grout. The two risers extending above grade were also grouted and capped.

Inventory

The 241-CX tank system ASA (BHI 2000) contains a detailed discussion of the inventory of the tank. The tank is estimated to contain approximately 930 gal of residual limestone and sludge.

IMUST Risk Rankings

Tank 241-CX-71 risk rankings are provided in Table 1-1. These rankings were established based on reasonable engineering judgment and the hazard and safety analysis (BHI 2000). The 241-CX tank system ASA has been approved by DOE.

Required Actions and Schedule

The 241-CX-71 tank system ASA addressed IMUST safety issues for tank 241-CX-71. It was concluded that continued S&M in accordance with the RARA Program and procedures is adequate to ensure near- and long-term safety of this tank under inactive S&M. Based on this analysis, BHI concludes that no further action is required at this time.

3.10 241-CX-72 EXPERIMENTAL TANK

Location

The 241-CX-72 experimental tank is located approximately 550 ft east of the 209-E Building and approximately 100 ft southeast of the former site of the Strontium Semiworks (201-C) Facility. The top of the tank is located approximately 14 ft below grade. The tank is located underneath an access hatch that is located at floor level inside a temporary, 22-ft by 48-ft, plywood greenhouse structure. The location of the tank is shown in Figure 3-13.

Construction

Tank 241-CX-72 is a vertically oriented tank that is 40 in. in diameter by 35.8 ft high. The tank is constructed of 0.4-in.-thick stainless-steel plating, with five stiffening rings around the perimeter connected by three rows of vertical guides. A cylindrical heater is located just above each stiffening ring. The tank rests on a concrete pad inside a 6-ft-diameter steel caisson. The top of the tank is sealed with a plate that extends over and seals the caisson. The bottom of the caisson is sealed with a 12-in.-thick reinforced-grout plug that provides a base pad for tank 241-CX-72.

The tank capacity is approximately 2,300 gal. Five risers extend from the top of the tank, in addition to a manually operated agitator. Two inlet pipes also penetrate the tank.
Tank 241-CX-72 is shown in Figure 3-16.

Waste Information

Tank 241-CX-72 was an experimental tank used to study the characteristics of self-concentrating waste from the PUREX process. The tank was used in this capacity for approximately 1 year.

Isolation/Stabilization

In 1986, the tank void space was filled with approximately 24 ft of grout.

Inventory

The ASA (BHI 2000), contains a detailed discussion of the inventory of tank 241-CX-72. Approximately 650 gal of dried sludge are located under the grout layer.

IMUST Risk Rankings

Tank 241-CX-72 risk rankings are provided in Table 1-1. These rankings are based on reasonable engineering judgment based on the hazard and safety analysis (BHI 2000). The 241-CX tank system ASA has been approved by DOE.

Required Actions and Schedule

The 241-CX tank system ASA (BHI 2000) addressed IMUST safety issues for tank 241-CX-72. It was concluded that continued S&M in accordance with the RARA Program and procedures is adequate to ensure near- and long-term safety of this tank under inactive S&M. Based on this analysis, BHI concludes that no further action is required at this time.

3.11 270-W NEUTRALIZATION TANK

Location

The 270-W neutralization tank is located under the northeast end of the 2715-UA Building, inside the 224-U facility fence in 200 West Area. The location of the neutralization tank is shown in Figure 3-17.

Construction

Drawing H-2-43118, Rev. 5, indicates that the neutralization tank is a vertically oriented cylindrical tank, 9 ft in height and 9 ft in diameter. The tank's normal working capacity is approximately 3,780 gal. The tank is constructed of stainless steel. A central 42-in. charging riser was provided to add limestone to the tank. The tank has one 6-in. riser. One 3-in. inlet line penetrates the tank, and there is one 6-in. discharge line. Tank 270-W is shown in Figure 3-18.

Waste Information

From 1952 to 1960, the neutralization tank received 224-U process condensate flows and stack drains from the UO_3 Plant. The tank was filled with limestone and used to neutralize the acidic process condensate that was generated as a waste stream in the concentration of UNH solution. The neutralized wastes overflowed from the 270-W neutralization tank to the 216-U-8 Crib.

Isolation/Stabilization

Drawing H-2-32485, Rev. 1 (a conceptual drawing), indicates plans to fill the charging riser (presumably with sand, gravel, or grout) prior to the construction of the 2715-UA Building (which was constructed in the 1960s). However, it could not be confirmed if the riser had ever been filled. Drawing H-2-43118 (from 1970) indicates that the tank was abandoned and the lines were capped. No formal documentation of as-builts drawings were located. Drawing SK-2-56961 shows that both the inlet line to tank 270-W and the tank outlet line to the 216-U-8 Crib were plugged and the bypass line around the 270-W neutralization tank was blanked off. According to WHC (1994a), visual inspection of the site indicates that the charging and vent risers were cut below ground level and a cement slab was poured over them.

Inventory

Historical reference reviews did not identify any documented inventory for this tank. The team evaluation considered various probable levels and concentrations. The potential variance was found not to be significant to the risk conclusions. See Appendix B, Table B-13, for additional details.

IMUST Risk Rankings

The neutralization tank risk rankings are summarized in Table 1-2. These rankings are based on BHI research and evaluation of drawings and documents. The basis for these rankings is documented in Appendix B, Table B-14.

Required Actions and Schedule

The risk assessment provided in Appendix B addresses the IMUST safety issues for the 270-W neutralization tank. It was concluded that the RARA Program is adequate to ensure near- and long-term safety of this tank under inactive S&M. Based on this analysis, BHI concludes that no further action is required at this time.

3.12 276-S-141 AND 276-S-142 HEXONE RECOVERY/STORAGE TANKS

Location

The 276-S-141 and 276-S-142 hexone recovery/storage tanks are underground storage tanks that are located approximately 150 ft northwest of the 202-S Building. The tops of the tanks are

located approximately 2 to 3 ft below grade. The location of tanks 276-S-141 and 276-S-142 is shown in Figure 3-19.

Construction

As shown in Drawing H-2-5303, Rev. 3, the hexone storage tanks are horizontal 0.38-in.-thick, carbon-steel, single-shell underground storage tanks that are approximately 28 ft long and 12 ft in diameter. The tanks have dished heads welded onto the end of the shells. The tops of the tanks are located 3 ft underground. Each tank has a working capacity of 21,500 gal. The following ancillary equipment is currently associated with these tanks:

- Abandoned above- and below-grade piping
- Abandoned above-grade vent piping and flame arrestor

The hexone tanks are shown in Figure 3-20.

Waste Information

From 1951 to 1967, the 276-S-141 and 276-S-142 hexone tanks received and stored reagent-grade methyl isobutyl ketone (hexone) used in the REDOX process. When the REDOX Plant was deactivated in 1967, the final cycle-recovered hexone from the plant was placed in the hexone tanks for storage. Tank 276-S-142 also contained kerosene and TBP from a one-time campaign to separate americium, curium, and promethium from Shippingport reactor blanket fuel in 1966.

Isolation/Stabilization

In 1991 and 1992, tanks 276-S-141 and 276-S-142 were remediated using a distillation process to remove free liquids from the tanks. A residual of approximately 250 gal of sludge and less than 30 gal of liquid heel were reported to be left in each tank. A nitrogen purge system was added to ensure that hexone evaporation did not create a flammable mixture. The need to continue using the nitrogen purge system was evaluated, and the system was terminated in 1999. After sampling detected vapor concentrations approaching the lower flammability limits, the nitrogen purge system was reactivated to reduce the oxygen levels in the tank system. In 2001, the sludge in the tanks was sampled for constituents and a videotape of the sampling activities was produced. Interim closure of the tanks was performed in 2002, consisting of grout fill (USQ determination 0200W-US-0217-02).

Inventory

The *REDOX Facility Safety Analysis Report* (BHI 2001a), as amended by USQ determination 0200W-US-N0217-02, addresses the residual inventories remaining in the hexone tanks. It is estimated that a maximum 132-gal tarry sludge heel with no liquid remains in each tank.

IMUST Risk Rankings

The 276-S-141 and 276-S-142 hexone tank risk rankings are provided in Table 1-1. These rankings are based on reasonable engineering judgment and the REDOX SAR (BHI 2001a), as amended by USQ determination 0200W-US-N0217-02.

Required Actions and Schedule

The REDOX SAR (BHI 2001a) addressed IMUST safety issues for the hexone tanks. Tanks 241-S-141 and 241-S-142 tanks are adequately managed under the facility's SAR (BHI 2001a), as amended by USQ determination 0200W-US-N0217-02.

3.13 200-E-58 NEUTRALIZATION TANK

Location

The tank is located approximately 45 ft south of the 295-AB Building, south of 202A Building (PUREX) in the 200 East Area. Alias identities of this tank include 216-A-5 and 216-A-TK-5. The location of tank 200-E-58 is shown in Figure 3-21.

Construction

Tank 200-E-58 is an underground, stainless-steel, cylindrical neutralization tank. The tank has an internal diameter of 11.3 ft. and is approximately 10 ft high with 0.38-in.-thick walls and 0.13-in.-thick bottom. The tank capacity is approximately 7,500 gal. The tank charging riser is a 40-in. internal diameter, 0.5-in.-thick carbon steel cylinder coated with coal tar on the external surface and extends approximately 1 ft above grade as shown on Drawing H-2-56057. The 8-in.-diameter tank inlet is located at the bottom of the tank and branches into an 8-in. stainless-steel perforated distribution cross header. An 8-in.-diameter outlet is located at the top of the tank (Figure 3-22).

Waste Information

Tank 200-E-58 was used to neutralize acidic condensate from the PUREX process distillate discharge (PDD) stream from approximately 1955 to 1961. The condensate streams originated in the PUREX F5, H4, J8, and K4 concentrators. Acidic liquid waste entered the tank from the bottom and was forced upward through a bed of limestone. Interaction with the limestone neutralized the waste prior to overflow through the outlet pipe. The neutralized condensate was discharged to the 216-A-5, 216-A-10, 216-A-38-1, and 216-A-45 Cribs. Tank 200-E-58 was used until the end of PUREX operation in 1988 (WIDS).

Isolation/Stabilization

The 200-E-58 tank isolation, which occurred in 1997, is shown on Drawing H-2-75575. Downstream isolation of the tank was accomplished in the sampler pit by closing valves,

removing valve handles, and sealing penetrations. Upstream isolation of the tank was accomplished in the 295-AB Building caisson and at the PUREX canyon wall by blanking, plugging, and capping input lines. In addition the tank charging riser was capped by installing a 0.5-in.-thick aluminum plate covered by a concrete pour and topped with an aluminum cover.

Inventory

Sludge has accumulated below the inlet distribution cross. Calcium carbonate was loaded routinely into the charging riser to neutralize the PDD stream during PUREX operations. No detailed information was obtained from the historical records indicating the residual waste volumes or specific characteristics. Review of historical documents and interviews with waste specialists resulted in the upper bounding estimates that are summarized in Appendix B, Table B-15.

IMUST Risk Rankings

The neutralization tank risk rankings are summarized in Table B-16. These rankings are based on BHI research, evaluation of historical documents, and analogous waste site methodologies.

Required Actions and Schedule

The risk assessment provided in Appendix B includes the IMUST safety issues for tank 200-E-58. Based on this analysis, it is concluded that the RARA Program is adequate to ensure near- and long-term safety for inactive surveillance activities. BHI concludes that no further risk-reduction action is required until closure or a potentially unsatisfactory surveillance is observed.

3.14 TANK 270-E-1

Location

Tank 270-E-1 is located approximately 700 ft west of the 221-B Building, near the southwest corner of the 216-B-64 basin. It is associated with the 221-B and 224-B Buildings and the 216-B-12 Crib (Figure 3-23).

Construction

The tank had a 40-in.-diameter chute and a 6-in.-diameter riser extending to the surface from the stainless-steel below-grade tank. The tank has a diameter of approximately 9 ft and its height is approximately 9 ft, with 8.2 ft from the bottom to centerline of the outlet (as shown on Drawings H-2-43110 and H-2-43118). Capacity of the tank is approximately 3,900 gal (Figure 3-24).

Waste Information

The tank was used to neutralize acidic process condensate from the 221-B and the 224-B Facilities via the 241-ER-151 diversion box. Condensate entered the tank at the bottom and flowed upward through the limestone to an outlet pipe located 8 ft above the tank bottom. The tank contained a limestone bed through which the condensate percolated, reacted, and then overflowed to the 216-B-12 Crib. The tank was installed in 1952 and was taken out of service abandoned in the 1960s. A 1974 report indicated the surface of the sludge was located at 7.6 ft; no liquid was visible at this time. Sludge volume was estimated to be 3,800 gal. Radiation readings were less than 100 counts per minute (direct and smearable) and less than 0.5 mrad/hr at the risers. Waste in this tank is likely to include limestone, process condensate precipitates, salts, and residual process condensate. The process condensate that passed through this tank contained an average of 0.015 g per gallon of uranium, 2.6 E-7 g per gallon of plutonium, and 1.8 E-6 Ci per gallon of beta emitters.

Isolation/Stabilization

Drawing H-2-43046 indicates the 270-E Building was removed and the tank was capped and abandoned in the early 1960s. A sketch (SK-2-56961) from 1972 shows that the 40-in. riser was cut below the ground surface and covered with earth. A 1974 letter states that an unsuccessful effort to sample the tank was made on July 1, 1974. The letter also indicated plans to cut the inlet line and to pump the remaining liquid from the tank. The inlet and outlet lines would then be capped. Drawing H-2-44501, Sheet 97 shows that the inlet and outlet lines have been capped. During the investigation of soil contamination surrounding the tank, a small-diameter pipe, approximately 2 in. in diameter, was visible near the location of tank 270-E-1. It is possible that the pipe is a "swab riser" and is associated with an adjacent underground pipeline.

Inventory

Review of historical documents and interviews with waste specialists did not identify any additional information in the WIDS database. Analogous waste site assumptions are provided in Appendix B, Table B-17.

IMUST Risk Rankings

The neutralization tank risk rankings are summarized in Table B-18. These rankings are based on BHI research, evaluation of historical documents, and analogous waste site methodologies.

Required Actions and Schedule

The risk assessment provided in Appendix B includes the IMUST safety issues for tank 270-E-1. Based on this analysis, it is concluded that the RARA Program is adequate to ensure near- and long-term safety for inactive surveillance activities. BHI concludes that no further risk reduction action is required until closure or a potentially unsatisfactory surveillance is observed.

Figure 3-1. Location of the 216-BC-201 Siphon Tank.

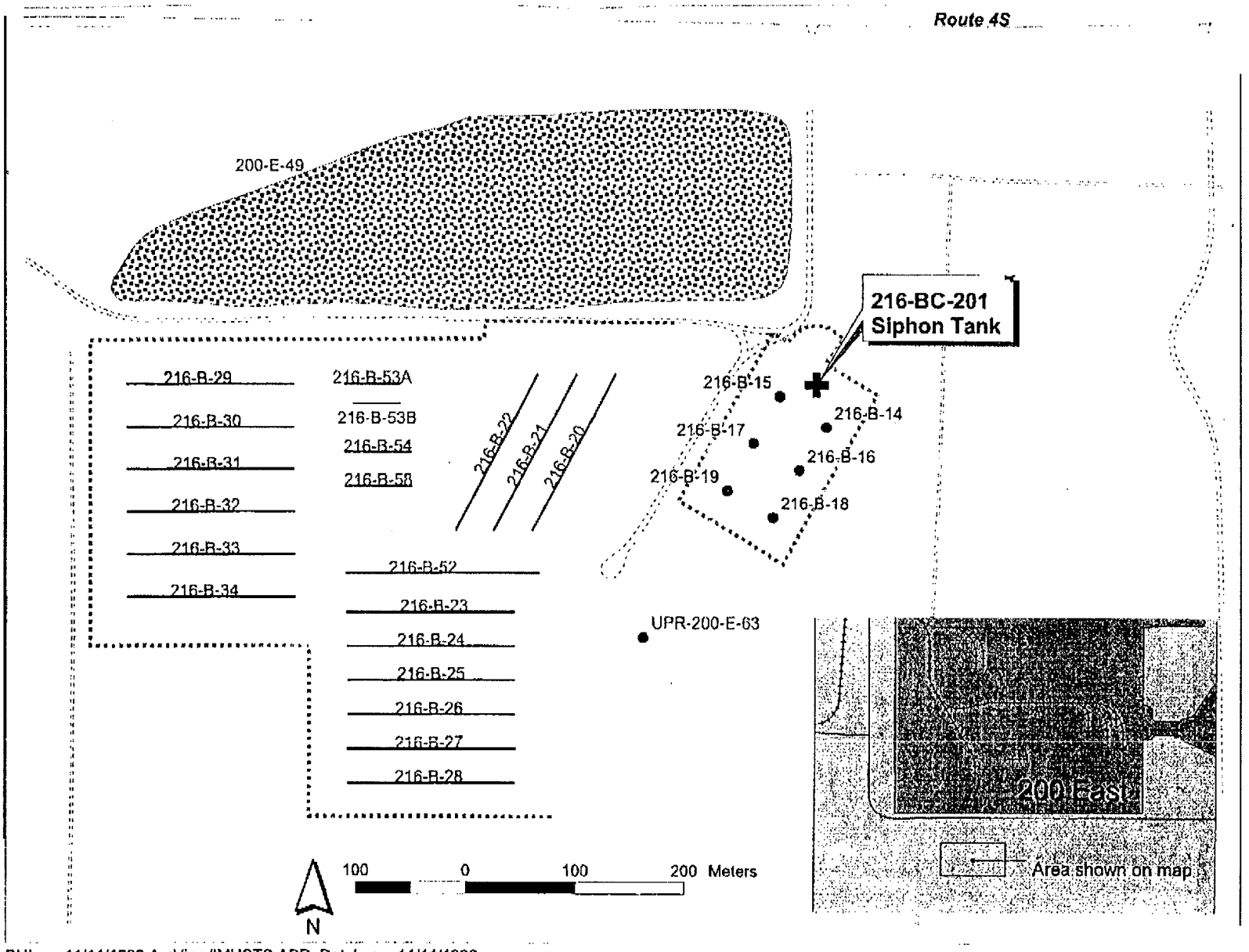

Figure 3-2. 216-BC-201 Siphon Tank.

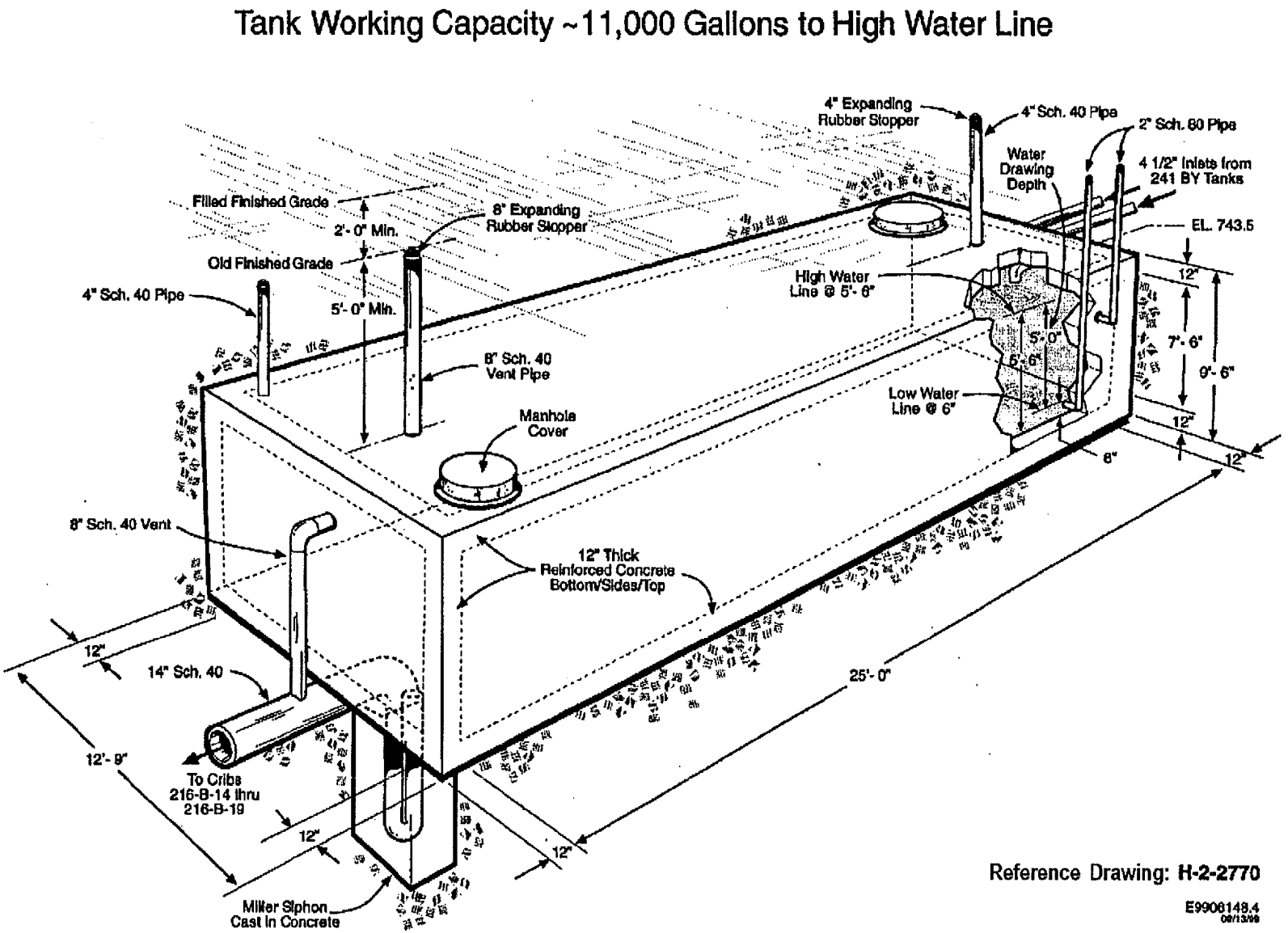

Figure 3-3. Location of the 216-BY-201 Siphon Tank.

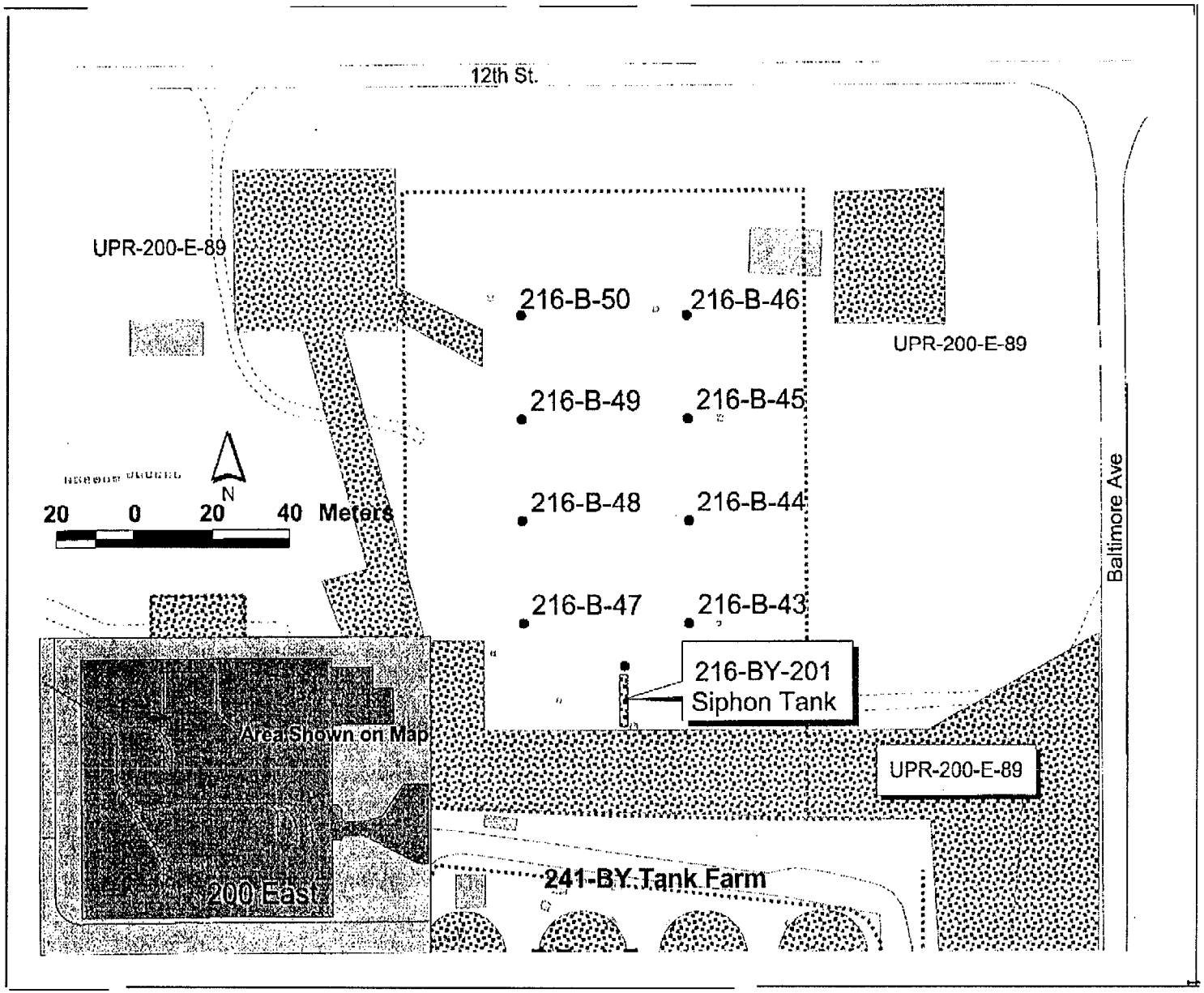

BHI:rpp 07/20/1999 ArcView/IMUSTS.APR Database: 07/20/1999

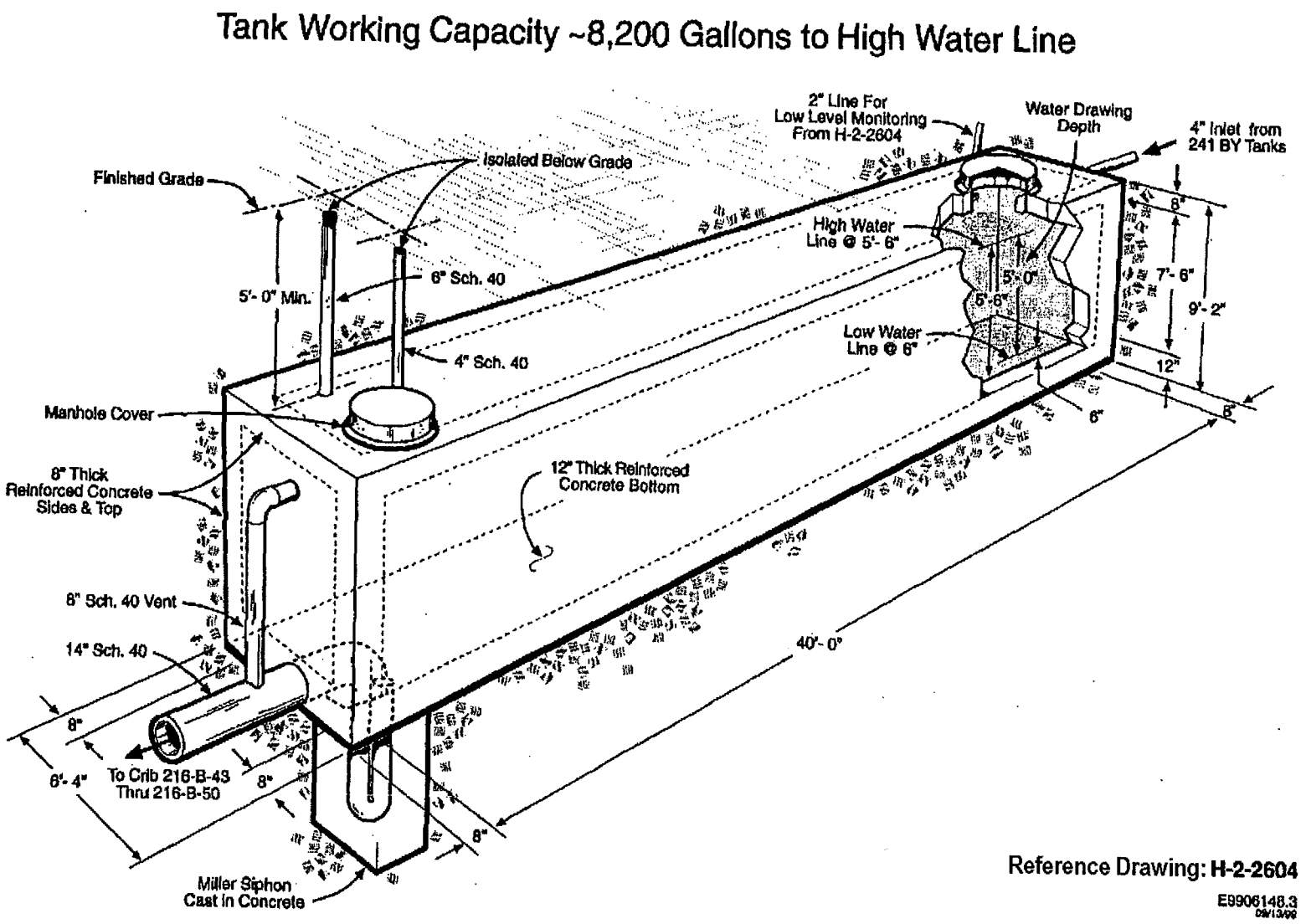

Figure 3-4. 216-BY-201 Siphon Tank.

Figure 3-5. Location of the 216-TY-201 Siphon Tank.

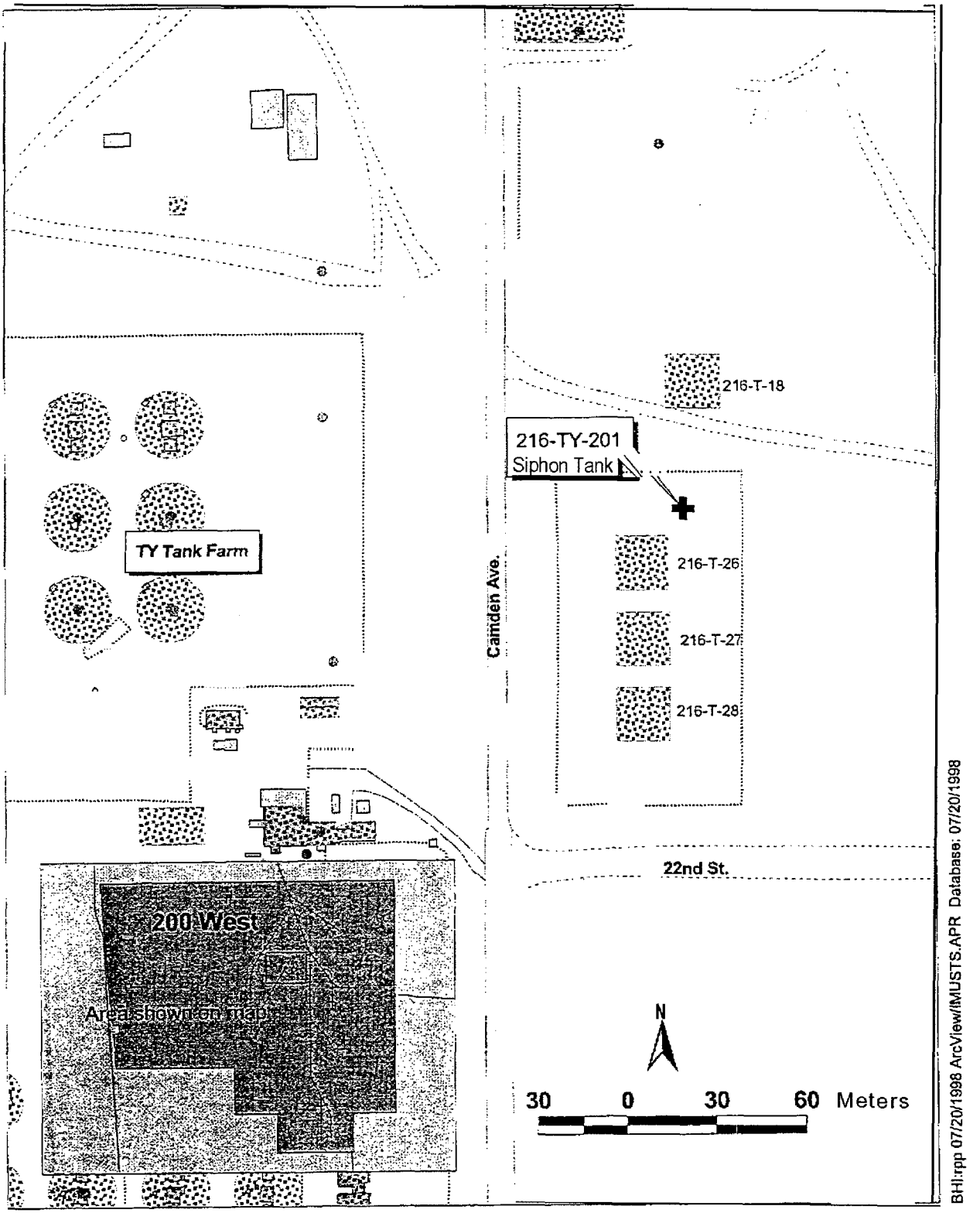

Figure 3-6. 216-TY-201 Siphon Tank.

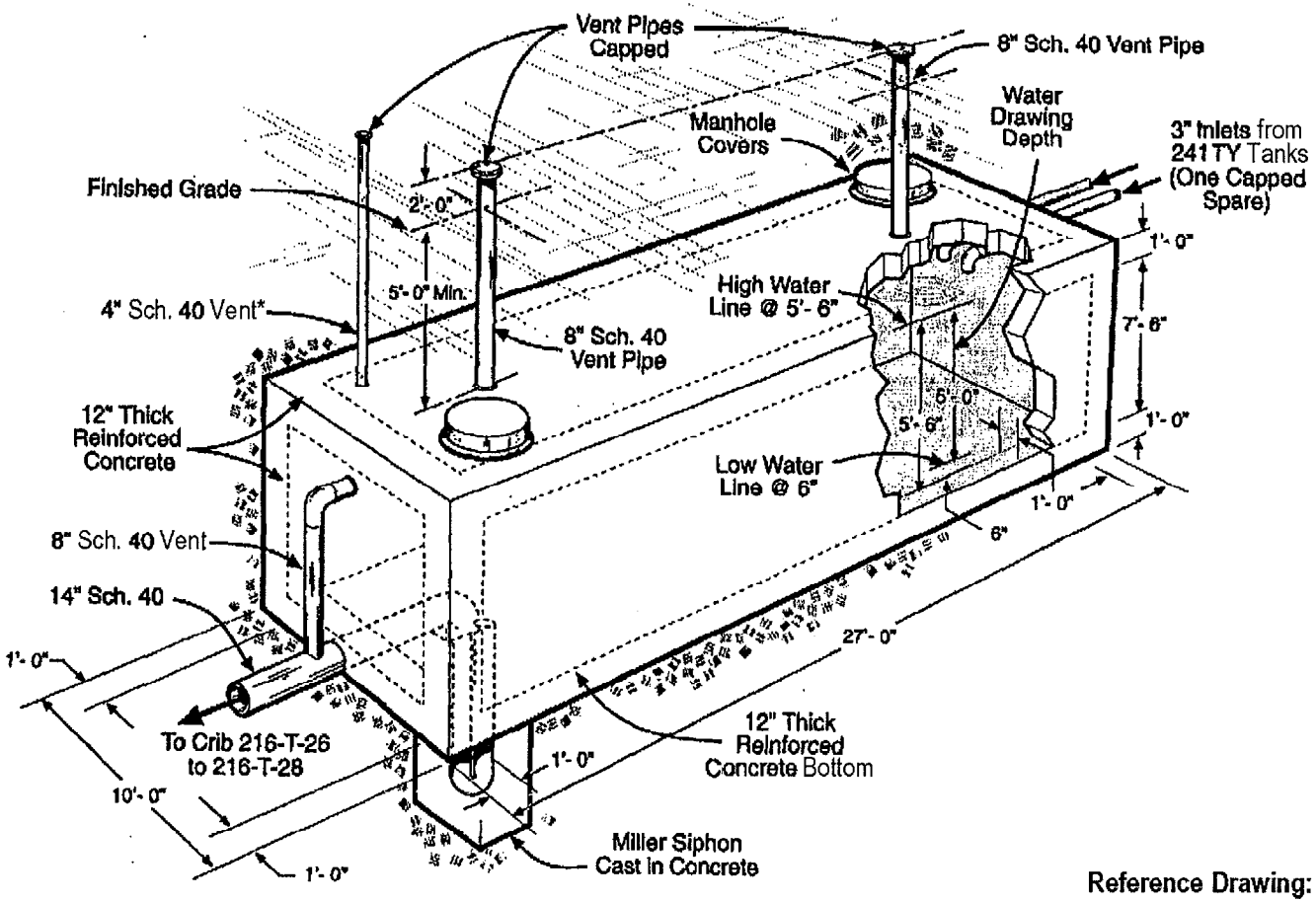

Reference Drawing: **H-2-2670**

E9906148.2
09/13/99

*Visual **Inspection** of Tank Indicates Riser is **Likely 6"***

Figure 3-7. Location of the 241-B-361 Settling Tank.

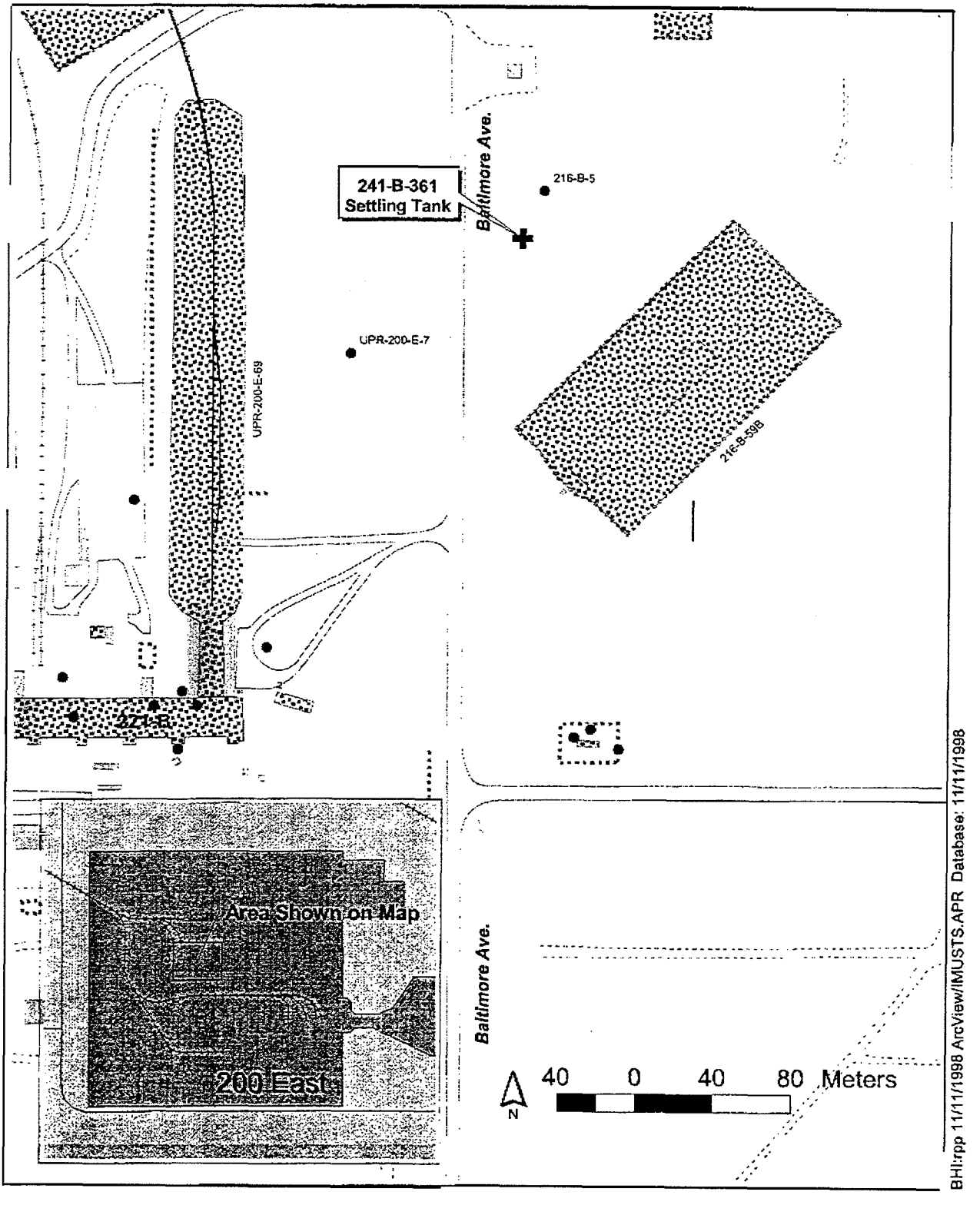

Figure 3-8. Settling Tanks 241-B-361, 241-U-361, and 241-T-361.

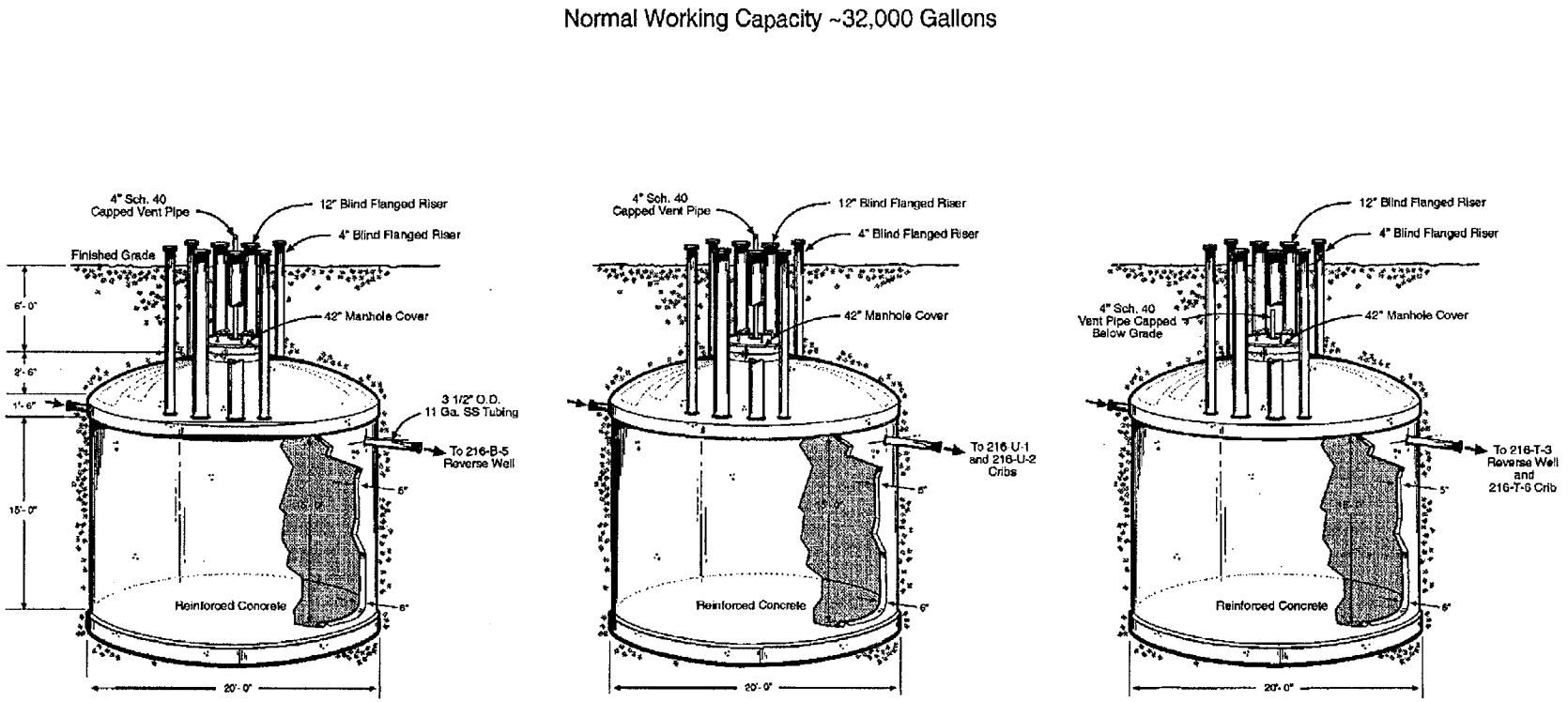

Reference Drawing: W-72902

Figure 3-9. Location of the 241-U-361 Settling Tank.

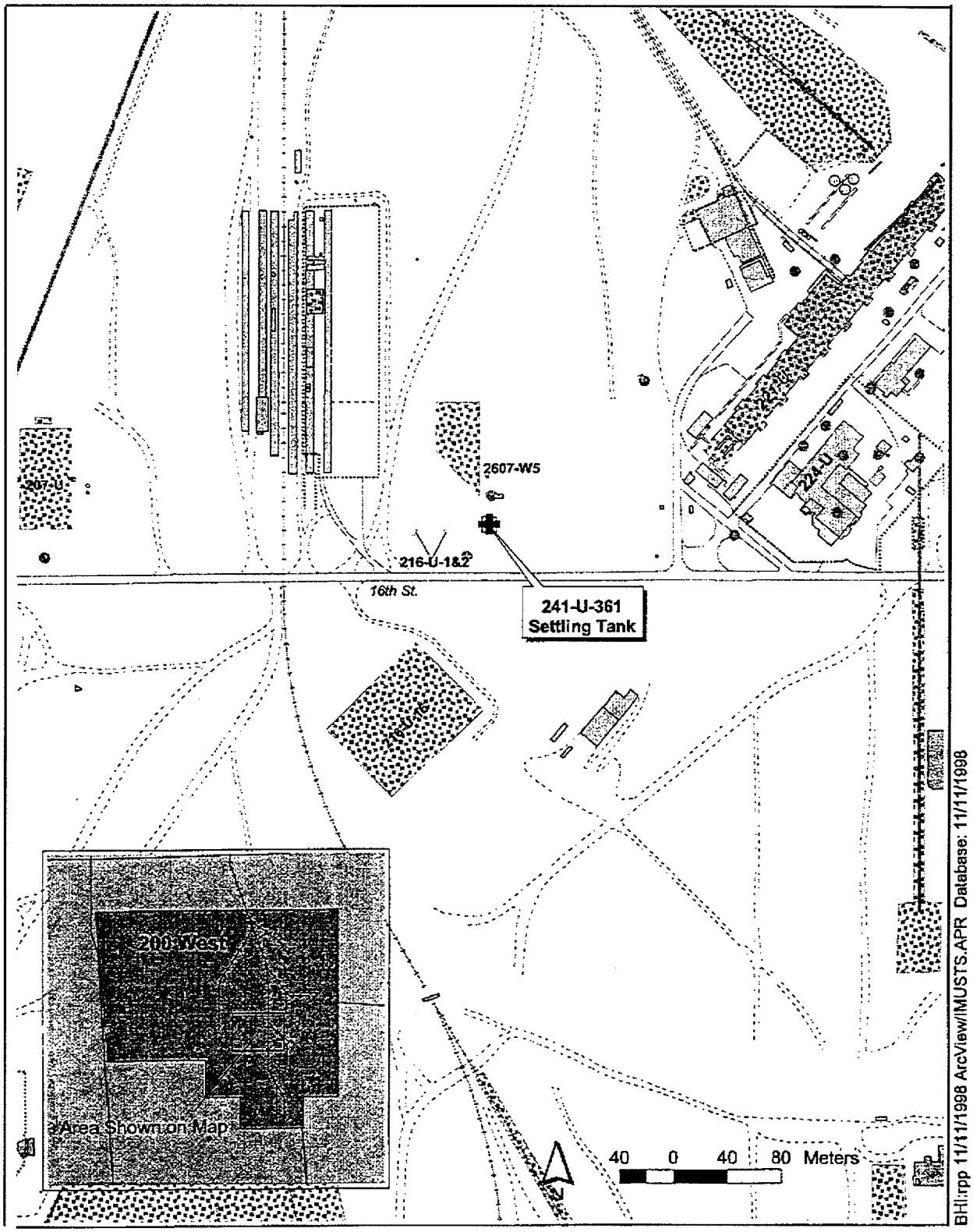

Figure 3-10. Location of the 241-T-361 Settling Tank.

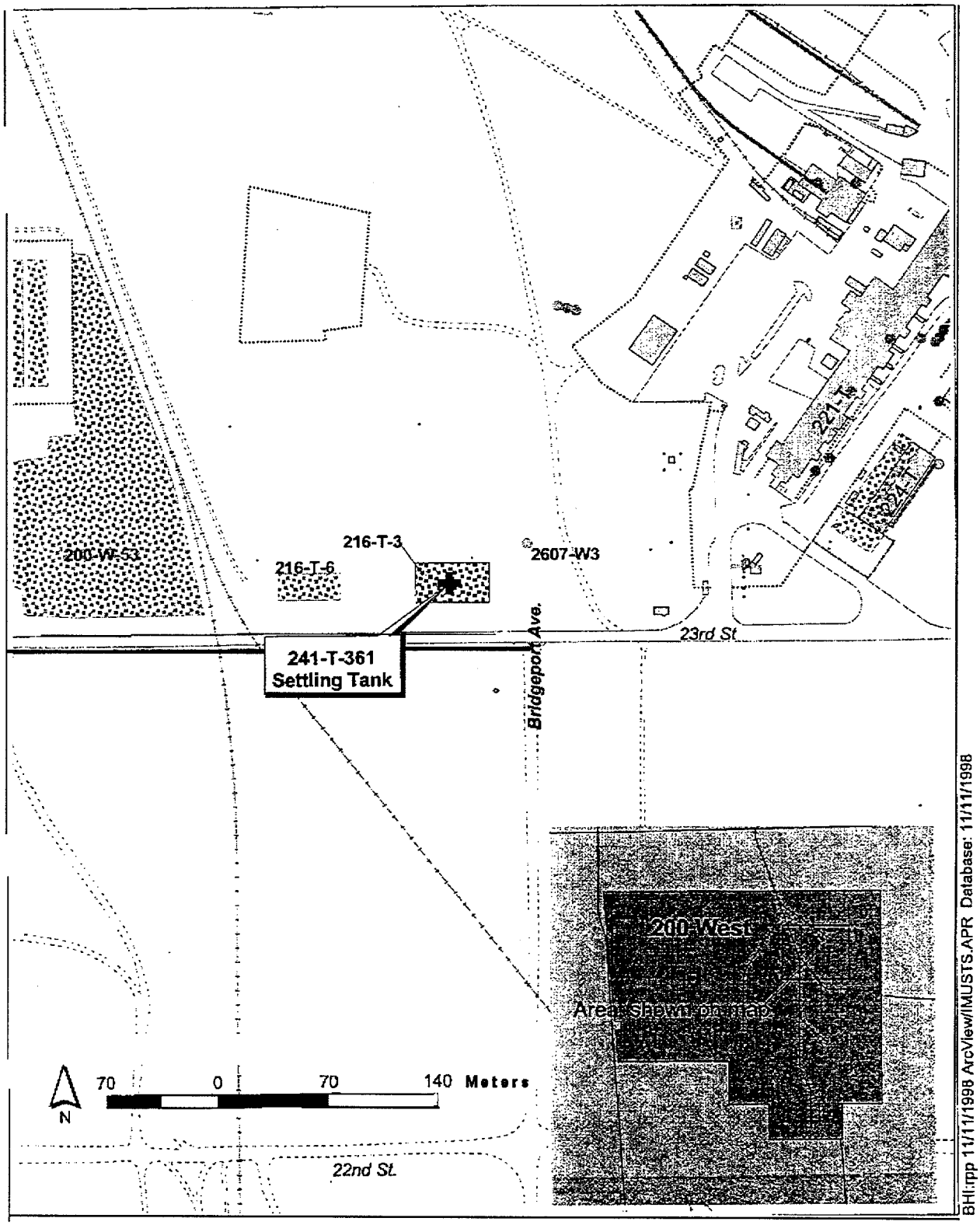

Figure 3-11. Location of the 241-WR-Vault and Tanks.

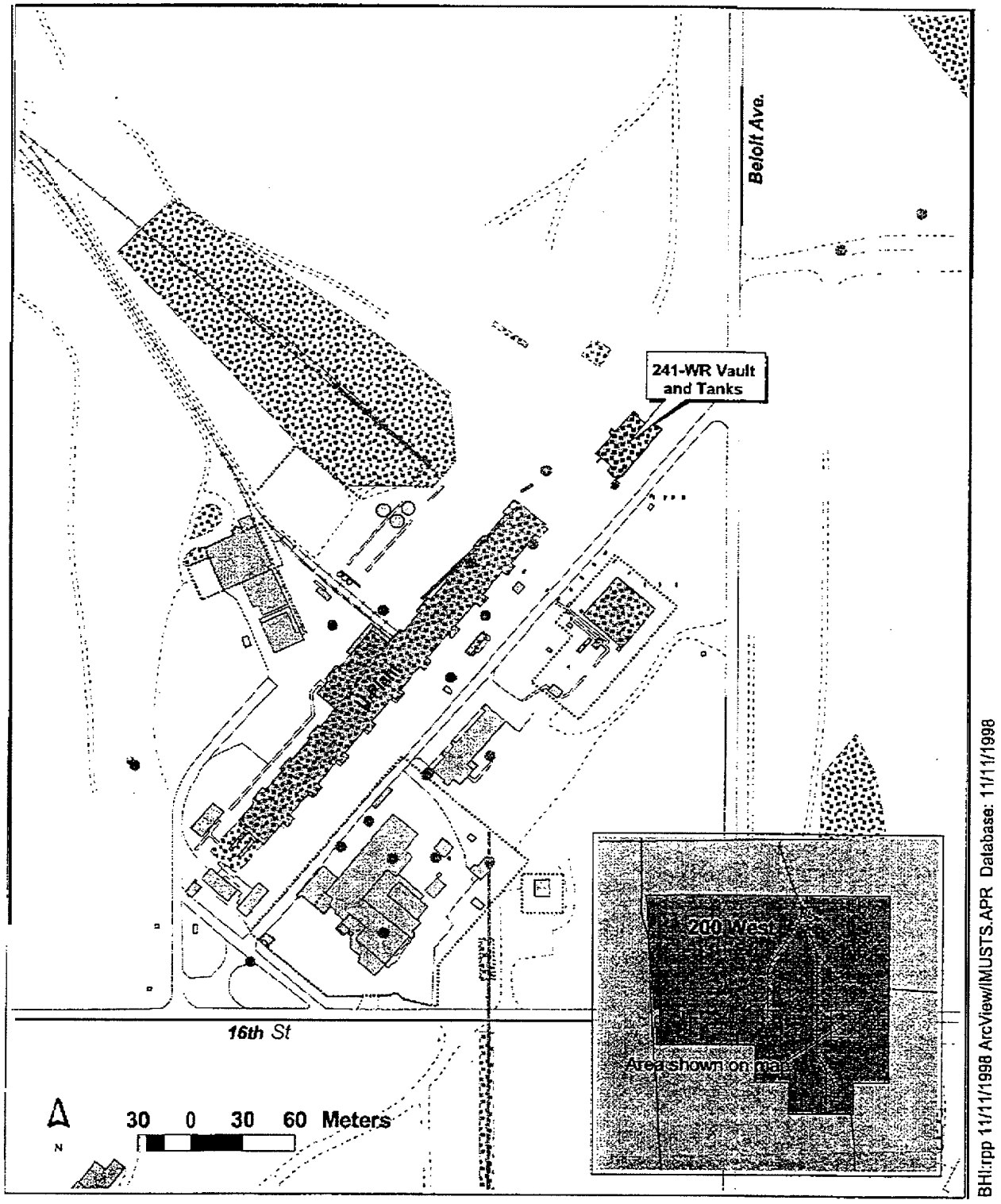

Figure 3-12. 241-WR Vault and Tanks.

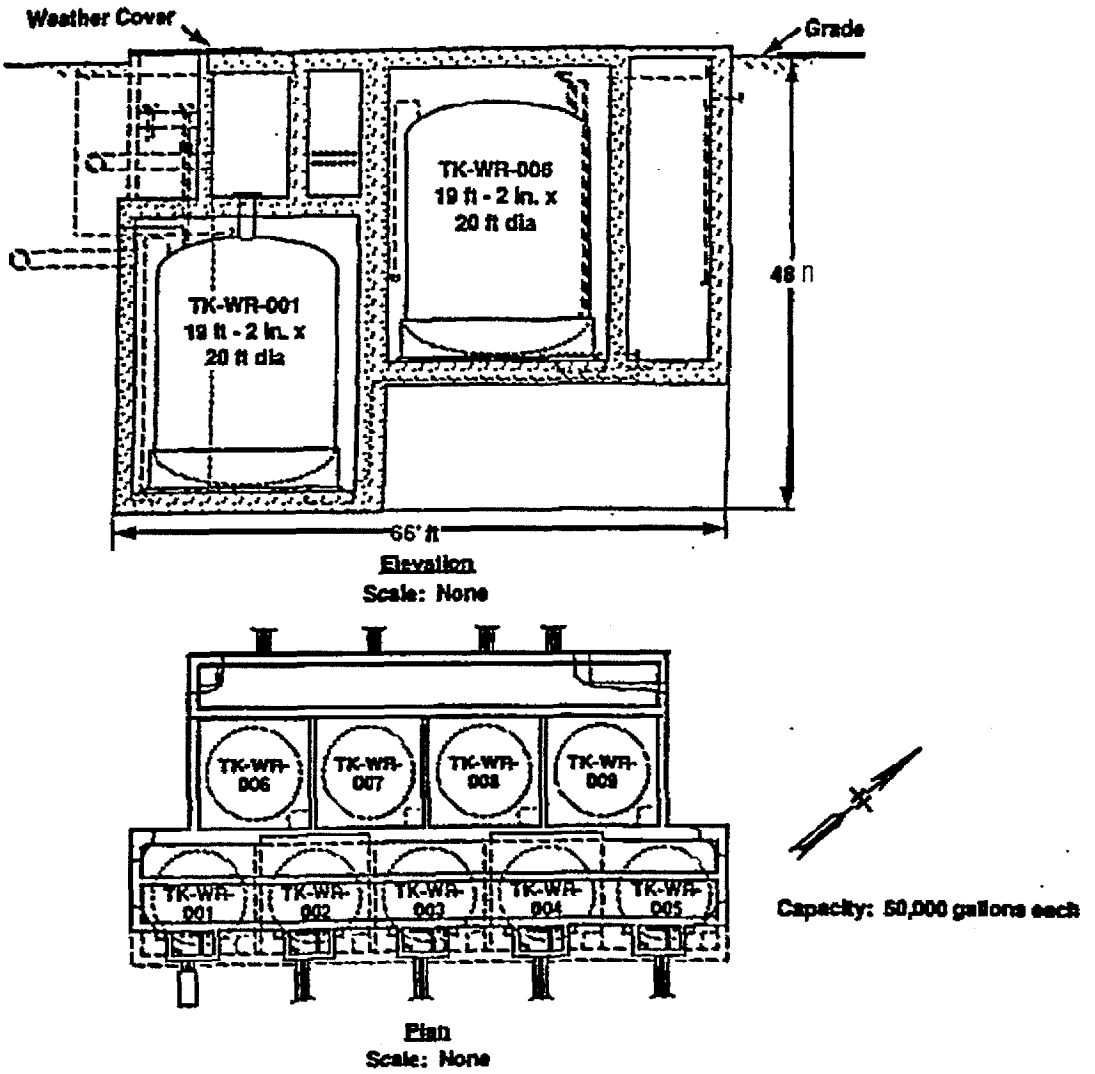

Figure 3-13. Location of Tanks 241-CX-70, 241-CX-71, and 241-CX-72.

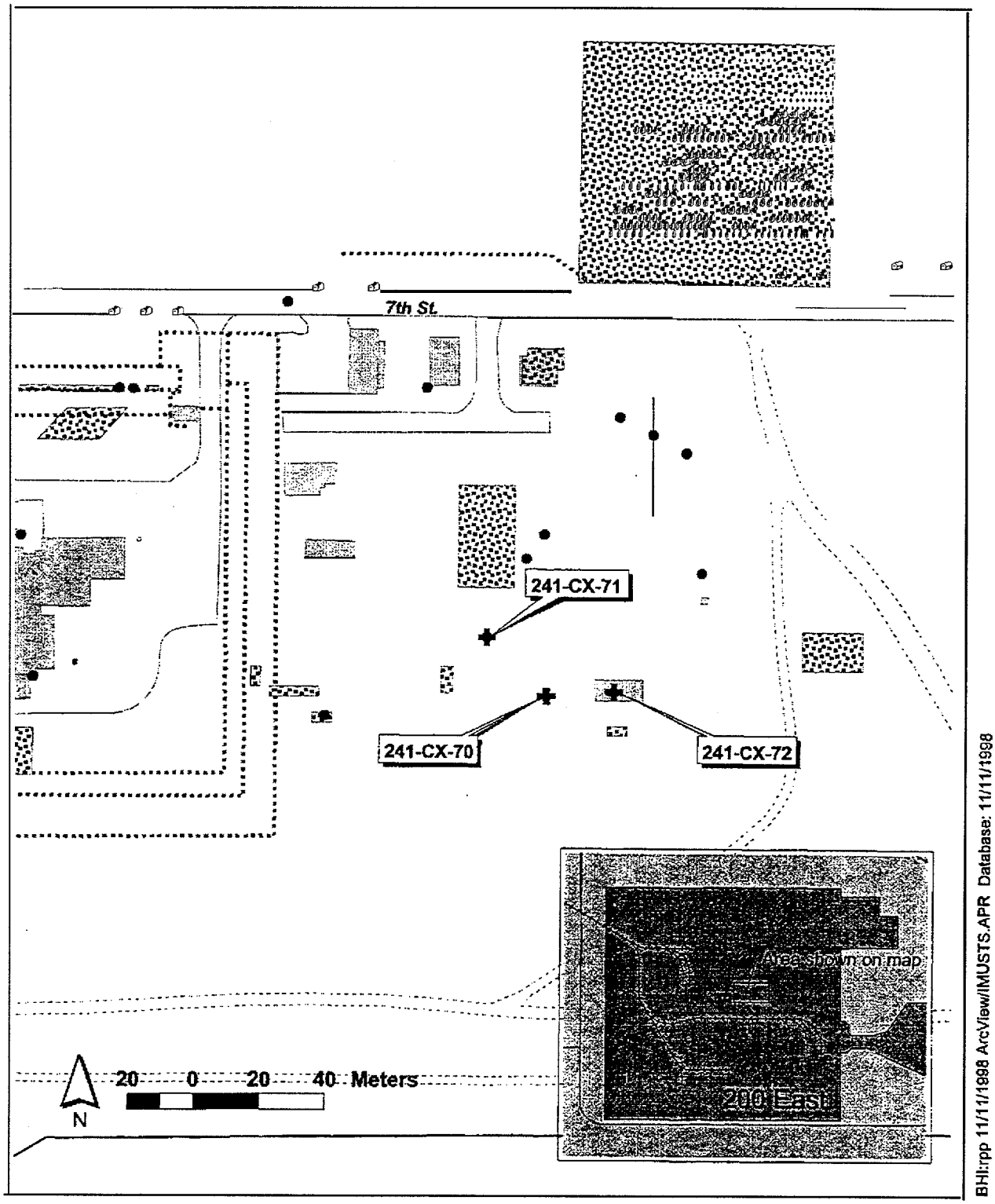

Figure 3-14. Tank 241-CX-70.

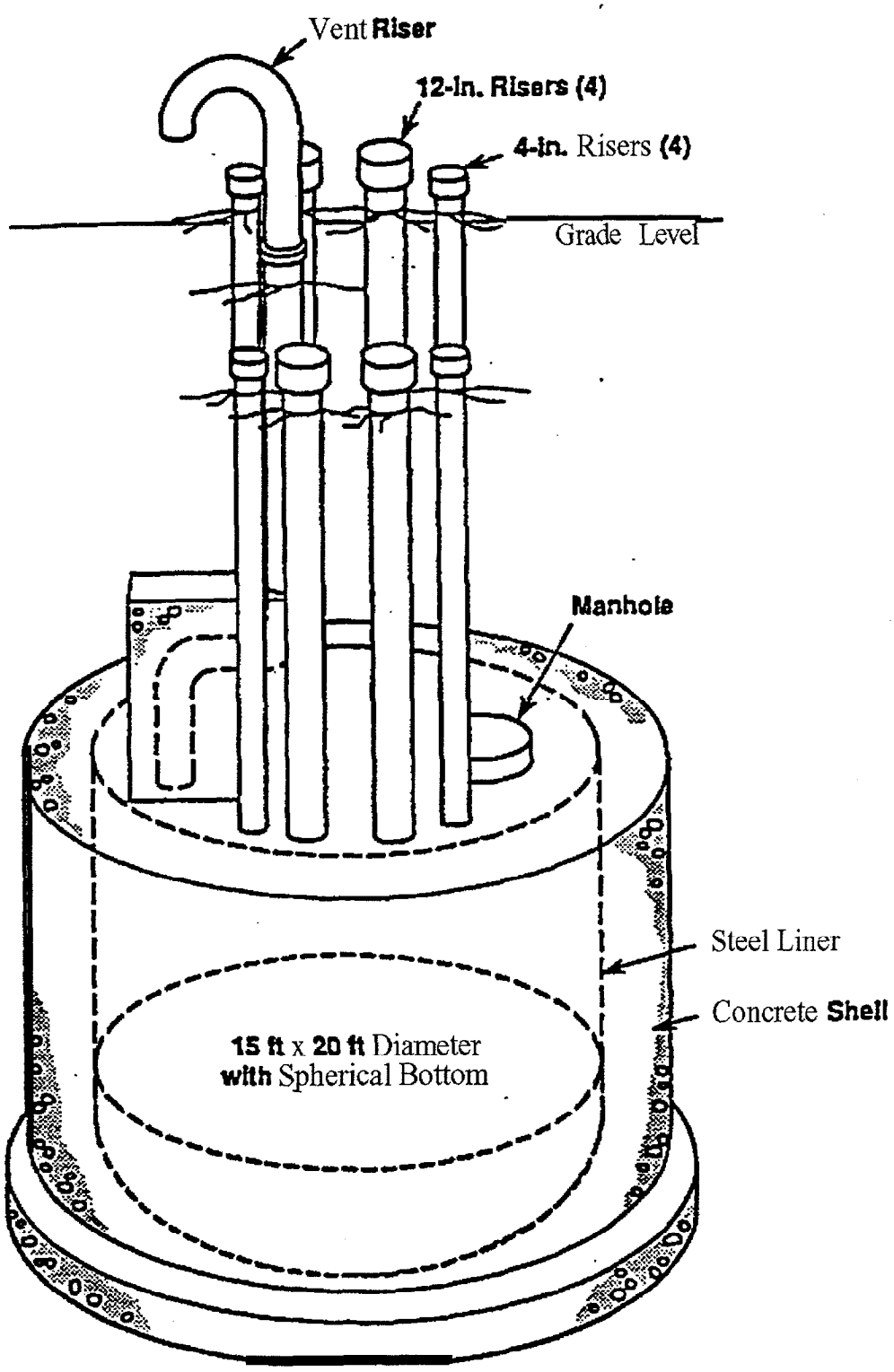

Capacity: 30,000 gallons

Figure 3-15. Tank 241-CX-71.

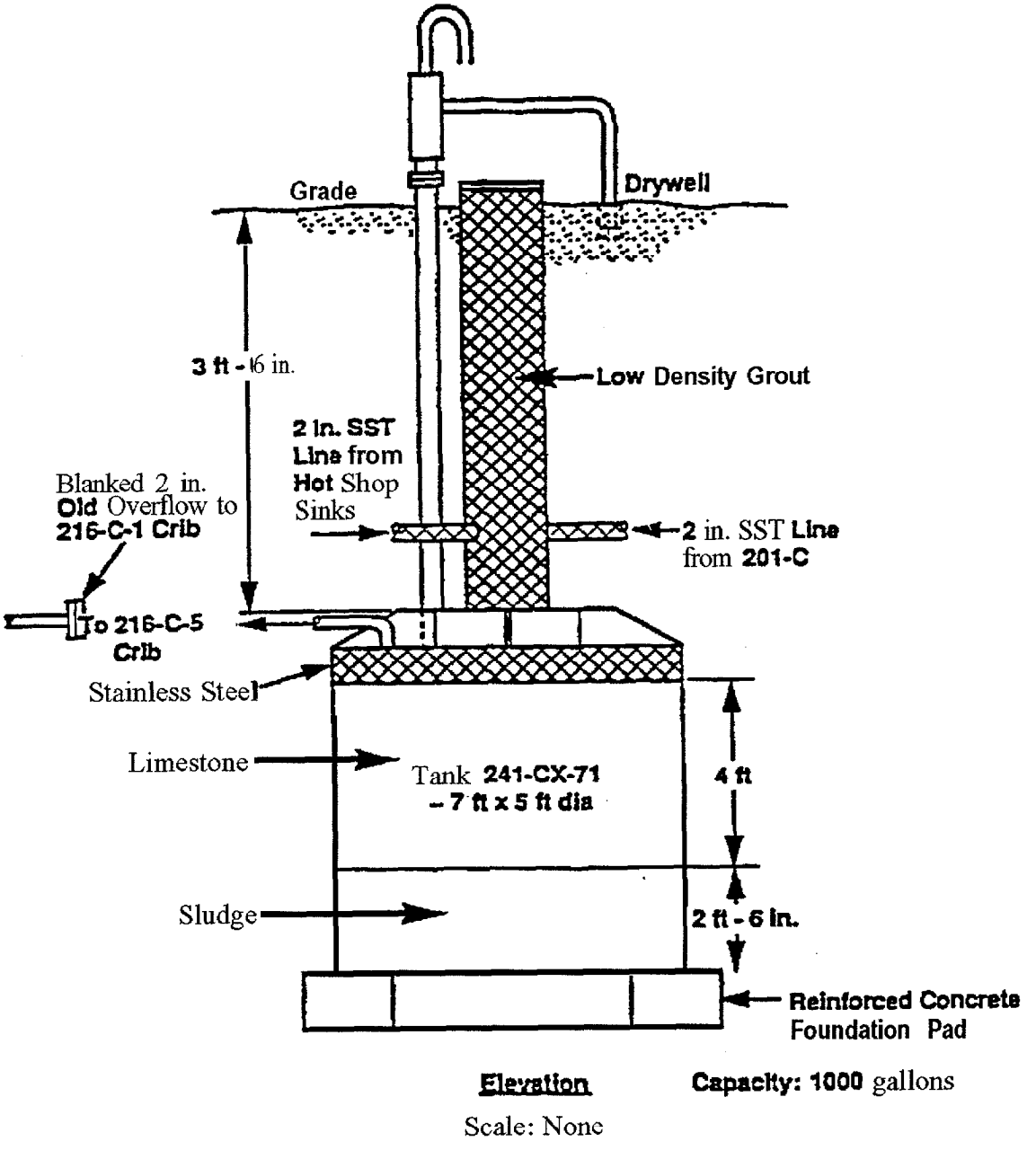

Figure 3-16. Tank 241-CX-72.

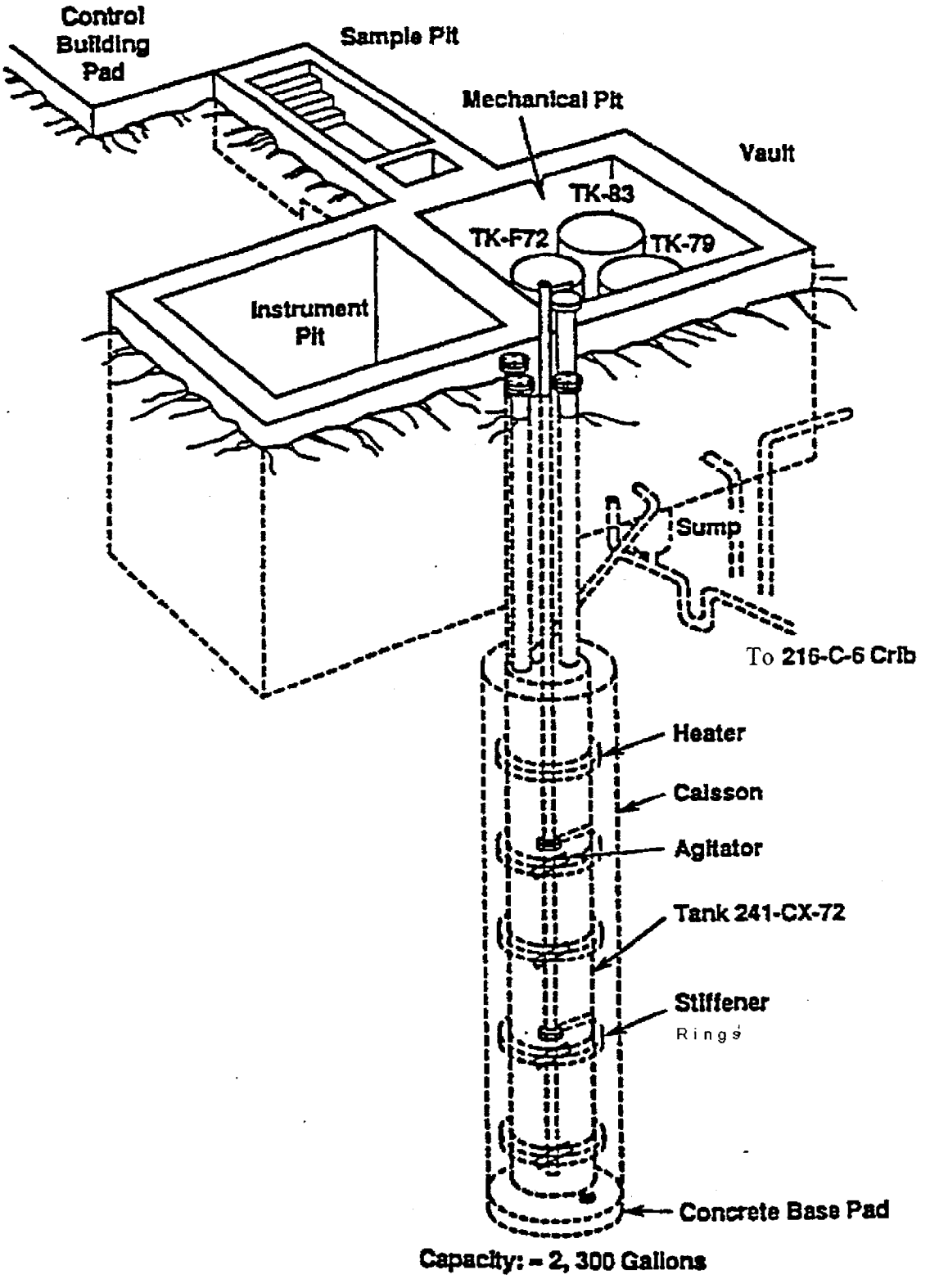

Figure 3-17. Location of the 270-W Neutralization Tank.

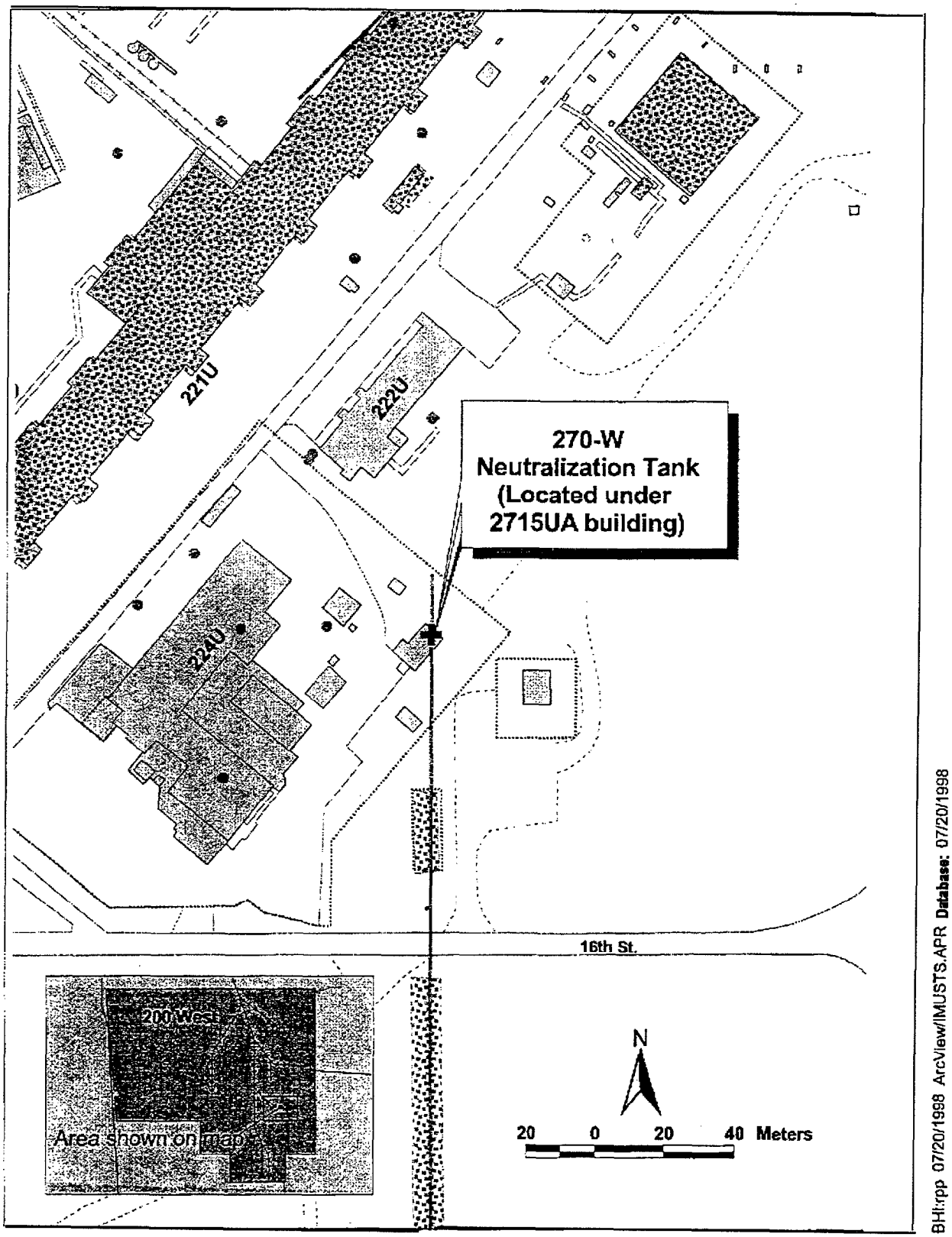

Figure 3-18. 270-W Neutralization Tank.

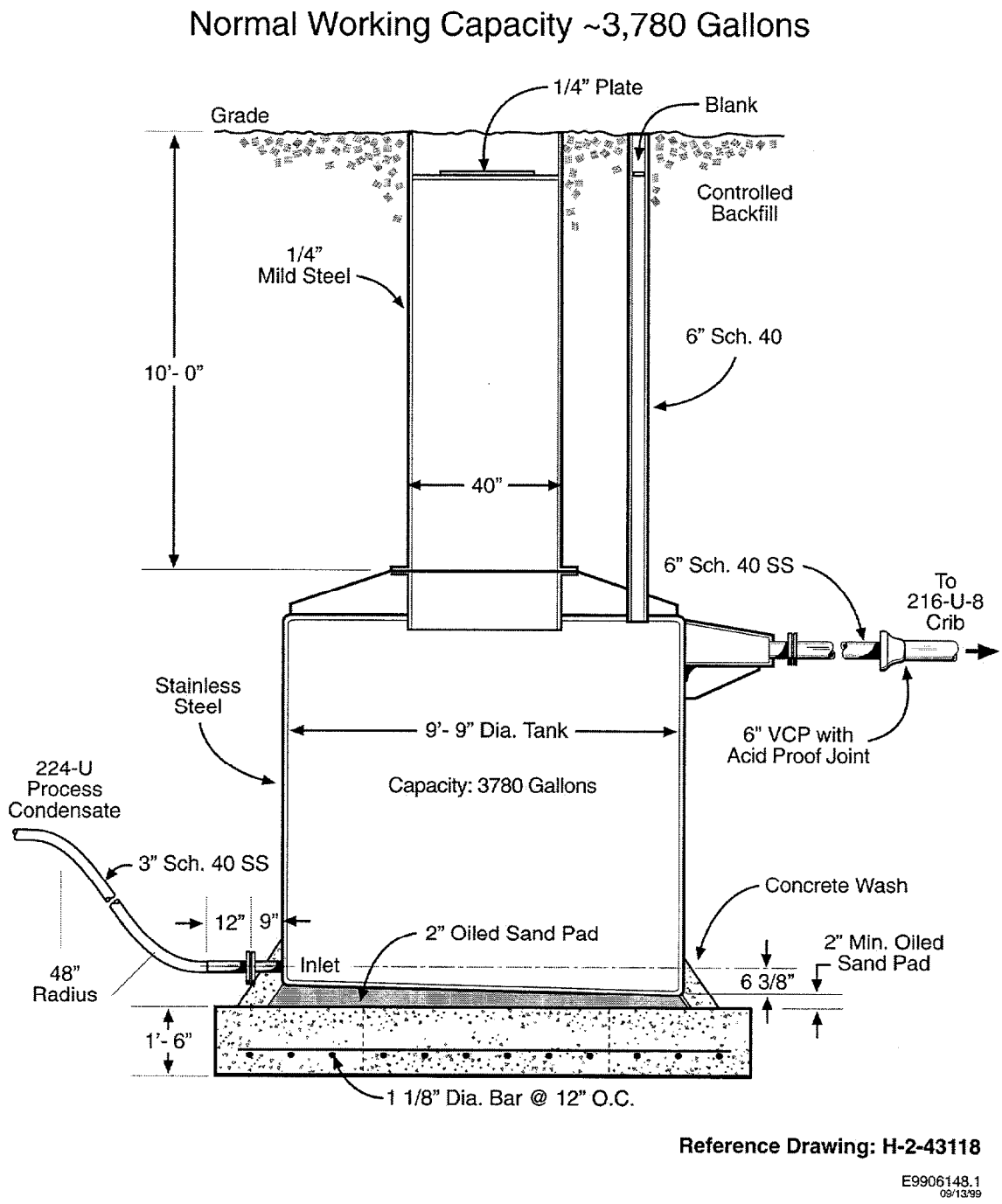

Figure 3-19. Location of the 276-S-141 and 276-S-142 Hexone Tanks.

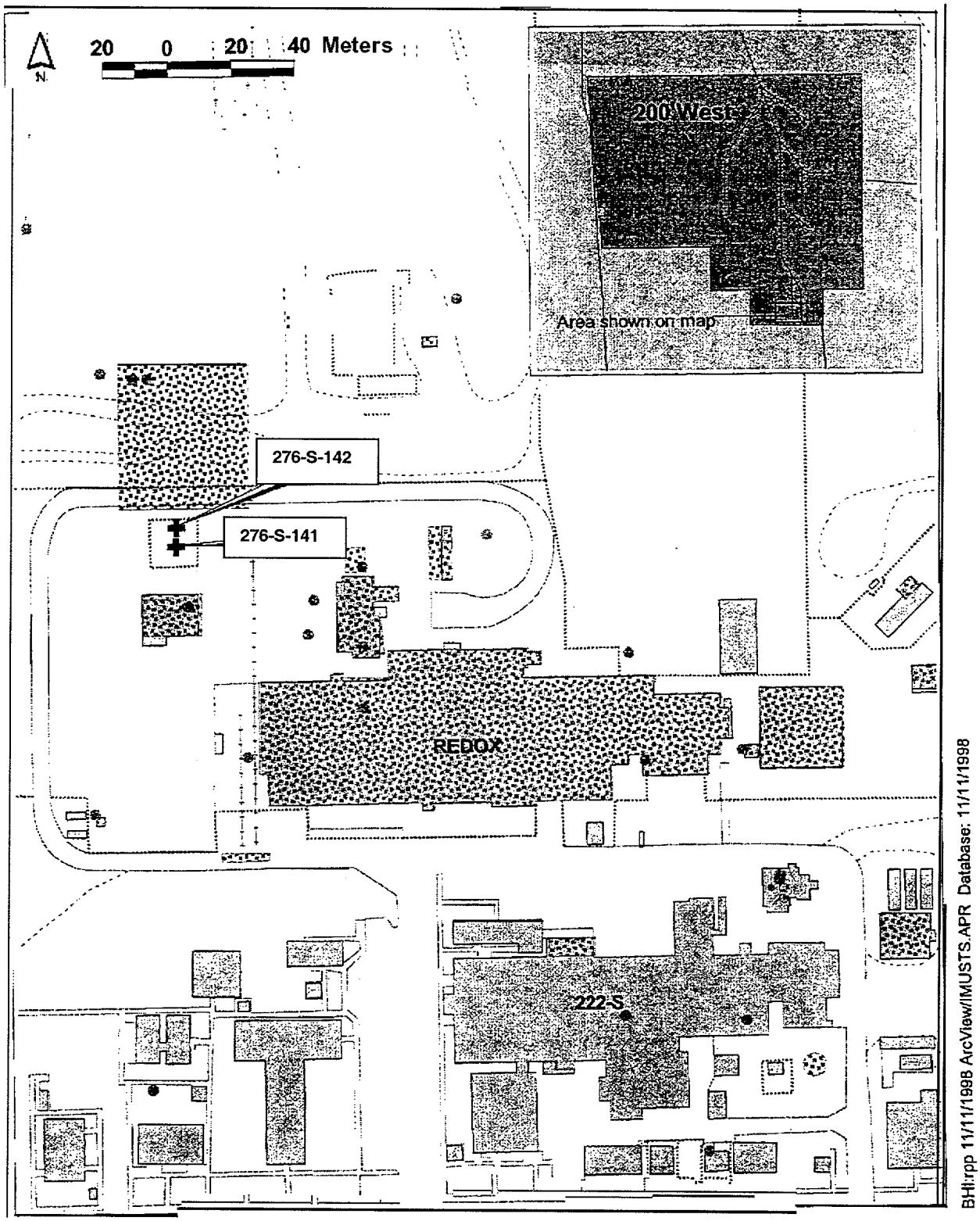

Figure 3-20. Tanks 276-S-141 and 276-S-142.

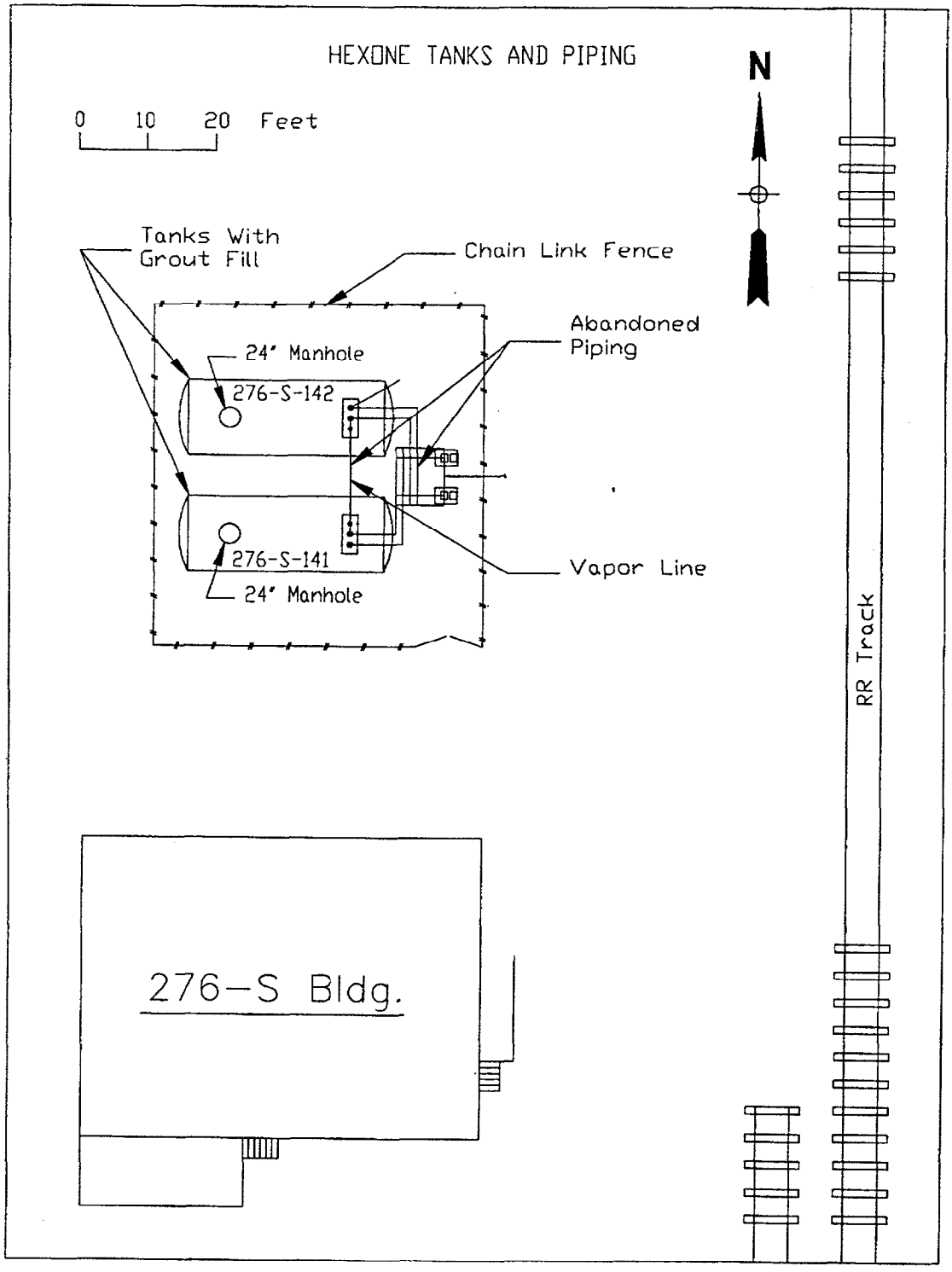

Figure 3-21. Location of the 200-E-58 Neutralization Tank.

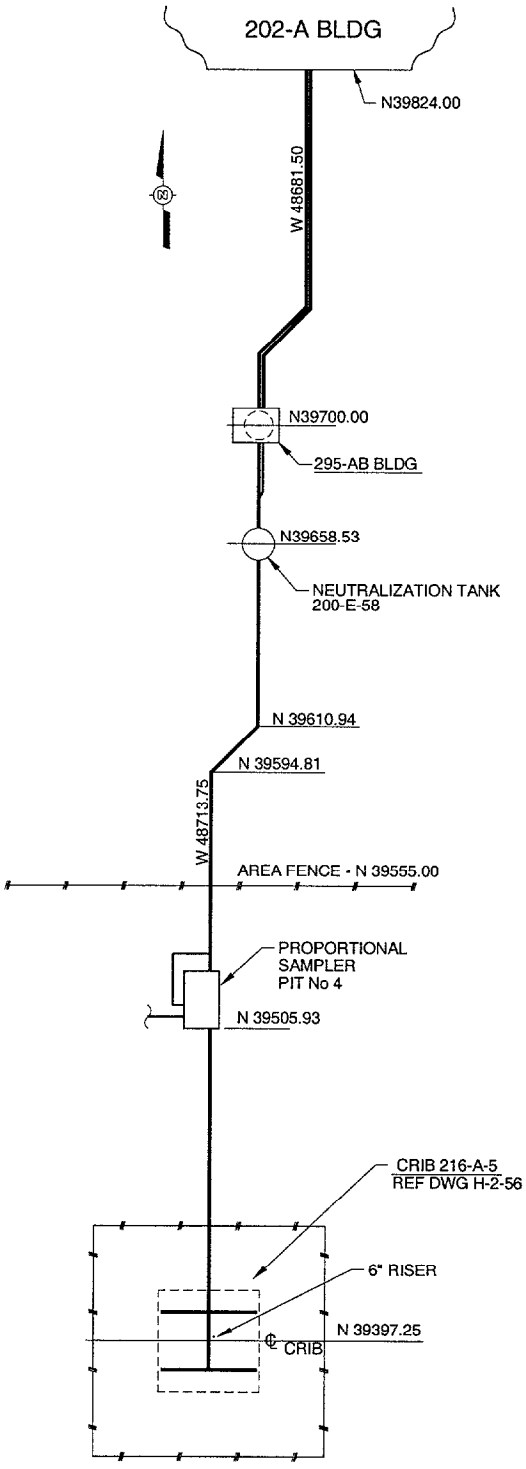

Figure 3-22. 200-E-58 Neutralization Tank.

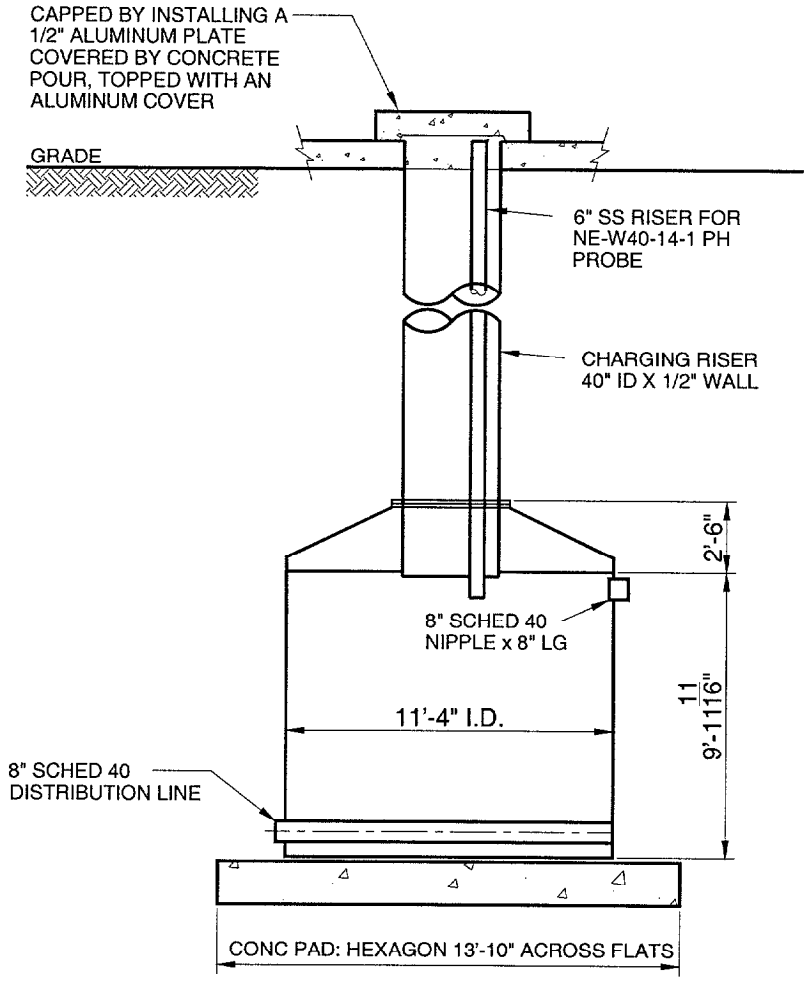

Figure 3-23. Location of the 270-E-1 Neutralization Tank

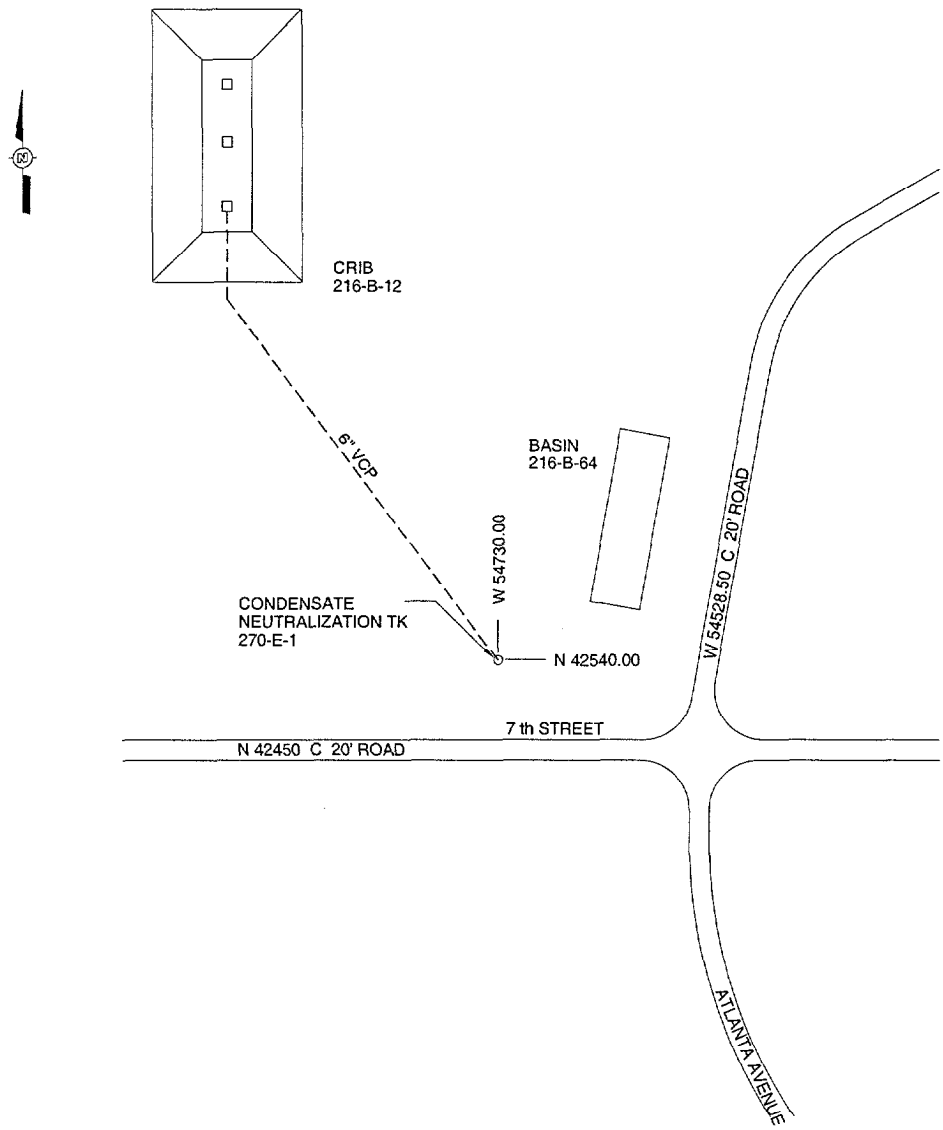

Figure 3-24. 270-E-1 Neutralization Tank.

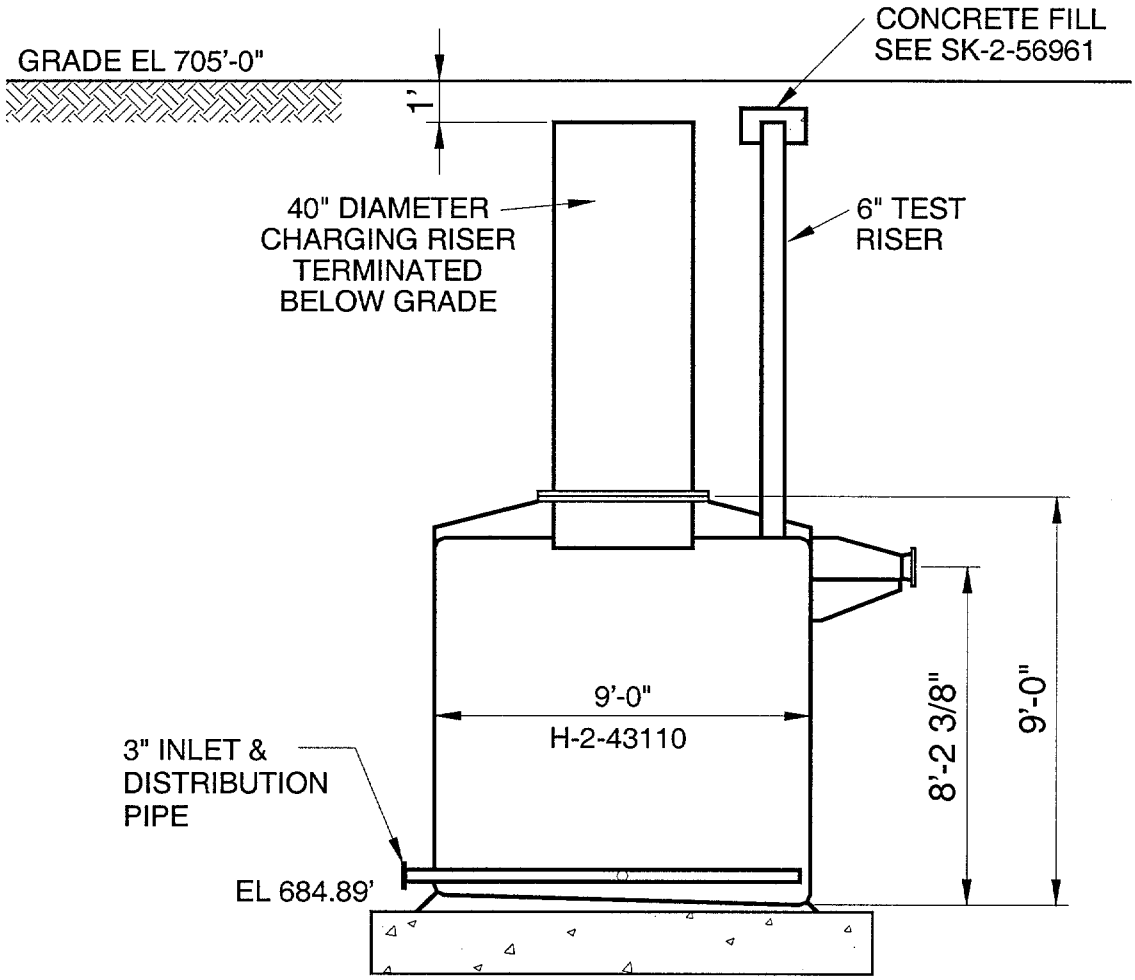

4.0 CONCLUSIONS

This document concludes that the remaining IMUSTs can be safely managed as inactive waste sites. The RARA Program provides for periodic surveillance, herbicide application, and radiological surveys. The frequency of these routine measures is determined on a site-specific basis. Pesticides, surface stabilization, subsidence control, and housekeeping practices (e.g., tumbleweed management) are used/performed as needed. The areas are posted and access controls are implemented to minimize inadvertent intrusion.

The existing characterization data were deemed adequate for preparation of this document; however, the data may be inadequate for the final disposition decisions. Final disposition (i.e., site closure) decisions may require additional characterization, depending upon the selected options. Settling tanks 241-B-361, 241-T-361, and 241-U-361 contain the largest inventories of hazardous materials. However, these tanks were not in the ferrocyanide waste stream, nor are they likely to contain significant levels of pumpable liquids. In addition, tanks 241-B-361 and 241-T-361 were not subject to organic waste processes, and there is no evidence that tanks 241-U-361 received organics.

Continued S&M under the RARA Program will ensure the necessary protection for continued S&M for all of the tanks, with the exception of the inactive hexone storage tanks. The 276-S-141 and 276-S-142 hexone tanks are safely managed as inactive facility components under the SAR (BHI 2001a).

5.0 REFERENCES

BHI, 1994, *Geophysical Investigation of the Flush Tank, 200-BP-1, 200 East Area*, BHI-00042, Rev. 0, Bechtel Hanford, Inc., Richland, Washington.

BHI, 1999, *Nuclear Safety Documentation Changes*, BCP-99117, Rev. 0, dated, March 9, 1999, Bechtel Hanford, Inc., Richland, Washington

BHI, 2000, *Auditable Safety Analysis for Surveillance and Maintenance of the 241-CX Tank System*, BHI-01173, Rev. 1, Bechtel Hanford, Inc., Richland, Washington.

BHI, 2001a, *REDOX Facility Safety Analysis Report*, BHI-01142, Rev. 3, Bechtel Hanford, Inc., Richland, Washington.

BHI, 2001b, *U Plant Facility Safety Analysis Report*, BHI-01157, Rev. 3, Bechtel Hanford, Inc., Richland, Washington.

WHC, 1994a, *Engineering Study for 50 Miscellaneous Inactive Underground Radioactive Waste Tanks Located at the Hanford Site, Washington*, WHC-SD-EN-ES-040, Rev. 0, Westinghouse Hanford Company, Richland, Washington.

WHC, 1994b, *Safety Issue Resolution Strategy Plan for Inactive Miscellaneous Underground Storage Tanks*, WHC-EP-0775, Westinghouse Hanford Company, Richland, Washington.

LIST OF DRAWINGS

H-2-951, Rev. 1, 216-T-3, 216-T-6 *By-Pass Line Near 361-T Tank Plot Plan.*

H-2-1031, Rev. 16, 216-B-5 Reverse Well, *216-B-9 Crib and Tile Field – Plan and Details.*

H-2-2604, Rev. 4, *Supernatant Disposal Flush Tank TBP Waste Scavenging.*

H-2-2670, Rev. 1, *Supernatant Disposal Flush Tank Waste Scavenging.*

H-2-2770, Rev. 1, *Siphon Tank 1st Cycle & T.B.P. Waste Scavenging.*

H-2-2908, Rev. 6, 216-B51 *French Drain & Misc. Details – 1st Cycle & TBP Waste Scavenging.*

H-2-5303, Rev. 3, *276-S Organic-Solvent Make-Up Underground Storage Tanks Vendors Information.*

H-2-32485, Rev. 1, *Arch. & Elec. Maintenance Storage Building.*

H-2-40086, Rev. 5, *Mechanical Vessel Assembly 14' x 12' Tank TK-UR-002 & TK-UR-003.*

H-2-40199, Rev. 2, *Structural Concrete – Plans and Details Process Tank Vault.*

H-2-40200, Rev. 2, *Structural Concrete – Sections and Details Process Tank Vault.*

H-2-40201, Rev. 3, *Structural Concrete – Reinforcing -- Sections Process Tank Vault*, (Sheet #1).

H-2-40229, Rev. 3, *Structural Concrete Diversion Station Sections & Elevations* (Sheet #1).

H-2-40230, Rev. 3, *Structural Concrete Diversion Station Sections & Elevations* (Sheet #2).

H-2-43118, Rev. 5, *Condensate Neutralization Tank & Chemical Storage Facilities Arrangements and Details.*

H-2-43046, Rev 5, *241 E W Transfer System.*

H-2-43110, Rev 2, *Modification of 9-9 Tank.*

H-2-43118, Rev 5, *Condensate Neutralization Tank & Chemical Storage Facility Arrangement Details.*

H-2-56057, Rev 2, *Neutralization Tank Detail & Installation.*H-2-71605, Rev. 2, *Structural Vault Isolation Plans and Schedule 200 E and 200 W.*

H-2-71606, Rev. 2, *Structural Vault Isolation Sections and Details 200 E and 200 W.*

H-2-71632, Rev. 1, *Piping General Notes, Symbols and Legend.*

H-2-71653, Rev. 1, *Piping Plans and Sections 241-U Area.*

H-2-71657, Rev. 0, *Piping Standard Isolation Details* (Sheets #1 and #2).

H-2-71658, Rev. 1, *Piping Plans – UR Vault Isolation.*

H-2-71659, Rev. 1, *Piping Plans and Sections UR Vault Isolation.*

H-2-71667, Rev. 1, *HVAC/Process Piping WR Vault Isolation.*

H-2-71668, Rev. 1, *Instr/Elec/Prcs Piping WR Vault Isolation.*

H-2-71669, Rev. 1, *Utility Piping WR Vault Isolation.*

H-2-71676, Rev. 1, *Piping Plans Tanks 241-U-361 & 241-T-361.*

H-2-71677, Rev. 1, *Piping Plan and Elevation Tank 241-B-361.*

H-2-75575, Rev 6, *Engineering Flow Diagram, PDD Process Cnds Mon* (Sheet #2).

SK-2-4662, Rev. 1, *Piping Plan and Elevation Tank 241-B-361.*

SK-2-56961, *Piping Plans and Section TK-270-E-1 and TK-270-W.*

W-72902, Rev. 16, *Bl'd 241 TUB 20'0" Dia. Settling Tank 361 Arrangement and Concrete.*

APPENDIX A

IMUST STATUS AND OWNERSHIP

APPENDIX A

IMUST STATUS AND OWNERSHIP

Table A-1. IMUST Status and Ownership. (3 Pages)

Number of Tanks	Tank Number	Tank Type	Ownership	Ownership Notes	In Scope (Yes/No)?	In Scope Notes
1	216-BC-201	Siphon	BHI		Yes	Included in Appendix B – Risk Assessment.
2	216-BY-201	Siphon	TWRS	To be transferred to BHI (Bechtel 1999).	Yes	Included in Appendix B – Risk Assessment.
3	216-TY-201	Siphon	BHI	Transferred to BHI (Bechtel 1999).	Yes	Included in Appendix B – Risk Assessment.
4	241-B-361	Settling	BHI		Yes	Included in Appendix B – Risk Assessment.
5	241-CX-70	Waste Handling	BHI		Yes	Risk rankings based on analysis contained in ASA, approved by Pak (1998) and Bauer (1998).
6	241-CX-71	Neutralization	BHI		Yes	Risk rankings based on analysis contained in ASA, approved by Pak (1998) and Bauer (1998).
7	241-CX-72	Experimental	BHI		Yes	Risk rankings based on analysis contained in ASA, approved by Pak (1998) and Bauer (1998).
8	241-T-361	Settling	BHI		Yes	Included in Appendix B – Risk Assessment.
9	241-U-361	Settling	BHI		Yes	Included in Appendix B – Risk Assessment.
10	241-WR-001	Vault	BHI		Yes	Risk rankings contained in SAR, approved by Gerton (1999) and Bauer (1999).
	241-WR-001 Sump/Pit	--				
11	241-WR-002	Vault	BHI		Yes	Risk rankings contained in SAR, approved by Gerton (1999) and Bauer (1999).
	241-WR-002 Sump/Pit	--				

Table A-1. IMUST Status and Ownership. (3 Pages)

Number of Tanks	Tank Number	Tank Type	Ownership	Ownership Notes	In Scope (Yes/No)?	In Scope Notes
12	241-WR-003	Vault	BHI		Yes	Risk rankings contained in SAR, approved by Gerton (1999) and Bauer (1999).
	241-WR-003 Sump/Pit	--				
13	241-WR-004	Vault	BHI		Yes	Risk rankings contained in SAR, approved by Gerton (1999) and Bauer (1999).
	241-WR-004 Sump/Pit	--				
14	241-WR-005	Vault	BHI		Yes	Risk rankings contained in SAR, approved by Gerton (1999) and Bauer (1999).
	241-WR-005 Sump/Pit	--				
15	241-WR-006	Vault	BHI		Yes	Risk rankings contained in SAR, approved by Gerton (1999) and Bauer (1999).
	241-WR-006 Sump/Pit	--				
16	241-WR-007	Vault	BHI		Yes	Risk rankings contained in SAR, approved by Gerton (1999) and Bauer (1999).
	241-WR-007 Sump/Pit	--				
17	241-WR-008	Vault	BHI		Yes	Risk rankings contained in SAR, approved by Gerton (1999) and Bauer (1999).
	241-WR-008 Sump/Pit	--				
18	241-WR-009	Vault	BHI		Yes	Risk rankings contained in SAR, approved by Gerton (1999) and Bauer (1999).
	241-WR-009 Sump/Pit	--				
19	270-W	Neutralization Tank	BHI	Transferred to BHI in CCN-069540.	Yes	Included in Appendix B – Risk Assessment.

Table A-1. IMUST Status and Ownership. (3 Pages)

Number of Tanks	Tank Number	Tank Type	Ownership	Ownership Notes	In Scope (Yes/No)?	In Scope Notes
20	276-S-141	Recovery Storage	BHI		Yes	Revised based on interim closure which consists of grout fill (USQ determination 0200W-US-0217-02).
21	276-S-142	Recovery Storage	BHI		Yes	Revised based on interim closure which consists of grout fill (USQ determination 0200W-US-0217-02).
22	200-E-58	Neutralization Tank	BHI		Yes	Included in Appendix B – Risk Assessment.
23	270-E-1	Neutralization Tank	BHI		Yes	Included in Appendix B – Risk Assessment.

A.1 REFERENCES

Bauer, L. K., 1998, *Approval of the Safety Basis for 241-CX System Surveillance and Maintenance (S&M)*, CCN 063195, letter to J. D. Wagoner, dated October 23, 1998, U.S. Department of Energy, Richland Operations Office, Richland, Washington.

Bauer, L. K., 1999, *Approval of the U Plant Complex Authorization Basis*, CCN 067481, letter to J. C. Hall, dated March 29, 1999, U.S. Department of Energy, Richland Operations Office, Richland, Washington.

Bechtel, S. E., 1999, *Contract DE-AC06-93RL12367 – Transfer of Waste Sites*, CCN 069540, letter to S. D. Liedle, dated June 7, 1999, U.S. Department of Energy, Richland Operations Office, Richland, Washington.

Gerton, R. E., 1999, *Approval of the U Plant Safety Analysis Report (SAR)*, CCN 071219, letter to S. D. Liedle, dated July 27, 1999, U.S. Department of Energy, Richland Operations Office, Richland, Washington.

Gerton, R. E., 1999, *Approval of the Safety Basis for 241-CX Tank System*, CCN 064026, letter to S. D. Liedle, dated November 19, 1998, U.S. Department of Energy, Richland Operations Office, Richland, Washington.

APPENDIX B

RISK ASSESSMENTS

APPENDIX B

RISK ASSESSMENTS

B.1 SCOPE

The risk assessments presented in this appendix address inactive miscellaneous underground storage tank (IMUST) issues during the extended period of surveillance and maintenance (S&M) that is anticipated prior to ultimate disposition of the tanks. Disposition alternatives are not addressed in this appendix.

The research for the risk assessments focused on obtaining the best available historical documentation for the tanks (e.g., laboratory sample results and as-built information concerning isolation and stabilization). Experience to date (i.e., preparation of similar documents) has indicated that subsequent usage and/or citation of base data is often subject to translational or typographical errors. The research attempted to rectify these translational and typographical errors and other inconsistencies in published documentation and resulted in a determination of the best available information.

The Bechtel Hanford, Inc. (BHI) risk rankings are based on the best available information that was obtained. The purpose of developing the best available information was to establish a realistic inventory from which to determine the necessary controls for each tank. The risk rankings were established using qualitative methods and reasonable engineering judgment. The risk assessments concluded that existing surveillance and administrative requirements under the Radiation Area Remedial Action (RARA) Program are adequate to ensure near- and long-term safety under inactive S&M.

B.2 DETERMINATION OF BEST AVAILABLE INFORMATION

To determine the best available information concerning the material condition and inventories of the tanks, a chronological table of documented data (e.g., level measurements, sample results, and other documented observations) specific to each tank was prepared.

Where information was in conflict (e.g., level measurements or inventories), the data were evaluated and a technical basis was provided for using, dismissing, or re-evaluating information. These evaluations are documented in the best available information tables (Tables B-1) column titled "Evaluation of References."

Decisions regarding the validity of the data were based on the following:

- Historical production processes
- Presence/absence of chemical/radiological constituents

- Credible concentrations of remaining constituents
- Credible volumes of remaining constituents.

Because detailed characterization of many of the tanks has not been performed, there is significant uncertainty associated with this "best available" information. To compensate for these uncertainties, the data extremes were evaluated by chemical and operations engineering staff with an in-depth knowledge of chemical processes and operations at the Hanford Site. The best available information was, in some cases, composed from multiple sources based on team judgment. Examples of such cases are as follows:

- Sample analysis data for the 241-U-361 settling tank provided uranium concentration. The given uranium concentration would result in a uranium inventory much larger than deemed reasonable (based on the operational history of 241-U-361). In this instance, the team evaluated the existing data and alternatively based the uranium inventory on the average waste flow value.

- Sample analysis data for the 241-T-361 settling tank did not present a concentration for uranium. The team determined that the sample was not analyzed for the presence of uranium. In lieu of a uranium concentration value, the team again based the uranium inventory on the average waste flow value.

The last row of the best available information tables (Tables B-1) identifies the best available total radionuclide and chemical inventory estimate for the tank.

B.3 RISK RANKING

Hazards associated with IMUST safety issues (i.e., hydrogen generation/buildup, ferrocyanide reactivity, organic salt reactivity, criticality, and flammability) are addressed in the risk ranking table.

The best available documentation was reviewed by chemical engineering staff and former operations staff to determine if there were any potential chemical vulnerability issues. Possible deviations in the best available inventory were considered in assigning the risk rankings of each tank.

The following methodology was used in determining the risk rankings:

- **N/A (not applicable)** – Used to show that the safety issue is not applicable to the tank (e.g., tanks not in the FeCN path, tanks that received no organics). The consequences are not discussed as the condition is not possible [FeCN, Org].

- **NONE** – Used to identify tanks in which the conditions necessary for the hazard to occur are not all met (e.g., an organic salt reaction requires the presence of both organic salts and high temperatures). Two examples are as follows:

  1. Tank 216-BC-201 contains trace quantities of organic salts, but there is no significant heat source. The consequences are not discussed as the condition is improbable [H2, FeCN, Org, Flam].

  2. Tank 241-BC-201 has an estimated quantity of fissionable materials that is well below the subcritical mass. The consequences are not discussed as the condition is improbable [Crit].

- **LOW** – Used to identify those tanks that may have the potential for a hazardous condition but have little risk. Two examples are as follows:

  1. Tank 216-BC-201 could potentially leak, however, the impact of such a leak is judged to be minimal since the tank liquids were routinely discharged to the soil column (via 216-B-14 through 216-B-19 Cribs). The consequences are discussed briefly [Heat, Vap, Leak, Rad].

  2. Tank 241-B-361 has an estimated quantity of fissionable materials that is greater than the subcritical mass limit but below the minimum critical concentration in a waste matrix, but since the probability of criticality is highly unlikely, the risk is low. The consequences are not discussed [Crit].

- **MODERATE** – Used to identify those tanks that may have the potential for a hazardous condition (short- or long-term), with some risk, such as the following:

  1. A hazardous condition with a remote likelihood that could lead to a lost time injury.

  2. A hazardous condition that is likely to occur and could result in a reportable occurrence.

- **HIGH** – Used to identify tanks with a remote likelihood for a hazardous condition (acute or chronic) to occur that could lead to a debilitating permanent injury or death.

B.4 SIMILAR STUDIES BY OTHER COMPANIES

Recent work performed by other companies for similar tanks was also considered in the team's evaluations. The team reviewed studies resolving the unreviewed safety questions at tank farms related to ferrocyanide hazards, criticality, and organic concerns. The team also reviewed the 241-Z-361 sludge characterization sampling and analysis plan, which contained historical research, headspace vapor sample data, and conclusions regarding the tank's condition. The assigned risk rankings are consistent with the conclusions of these studies.

B.5 CONCLUSIONS

Although the available characterization data were limited, process knowledge and uncertainty considerations provided a basis for the conclusions of this risk assessment. Each tank was analyzed individually and the risk rankings were assigned for the IMUST safety issues (presented in Section 2.0 in the main text of this document). No tank conditions were identified during the review of the seven IMUSTs that required controls beyond those provided by the RARA Program. Therefore, the existing S&M controls of the RARA Program are concluded to be adequate to ensure protection of workers and the environment. As previously noted, the assigned risk rankings are consistent with the conclusions of recent IMUST studies prepared by other onsite contractors.

Final disposition of these tanks will be determined as part of the larger operable unit that contains the tank. When the final disposition is determined, additional characterization, waste treatment, and/or structural stabilization may be required.

Table B-1. Determination of Best Available Information for 216-BC-201 Siphon Tank. (3 Pages)

Reference	Information from Cited Reference	Supporting Comments on Reference Information	Evaluation of References
HW-83718 (Doud 1964)	216-B-14, 216-B-15, 216-B-16, 216-B-18 received U Plant scavenged wastes. 216-B-17 received tank farm scavenged wastes. 216-B-19 received U Plant and tank farm scavenged wastes. **Crib** **14** **15** **16** **17** **18** **19** **Start** 1/56 4/56 4/56 1/56 3/56 2/57 **Stop** 2/56 12/57 8/56 1/56 4/56 10/57		No information regarding inventory or volume.
ARH-947, Rev. 1 (Curren 1972)	Quotes HW-83718 exactly.		No new information is presented.
ARH-CD-371 4Q (Anderson 1976)	P. 14-16 present a summary of crib inventories up to 1976.[A] **Crib** **14** **15** **16** **17** **18** **19** **Total** **Pu g** 25 5 10 10 10 10 **70** **β Ci** 1.4E5 6.9E4 5.4E4 2000 5.1E4 1.12E4 **3.3E5** **Sr Ci** 400 200 700 160 190 200 **1.9E3** **Ru Ci** 5.9E4 2.2E4 1.3E4 250 1.9E4 5100 **1.2E5** **Cs Ci** 250 200 650 220 250 270 **1.8E3** **Co Ci** 5 5 5 1 5 5 **26** **U kg** 218 104 322 354 236 181 **1.4E3** **Liters*** 8.71E6 6.32E6 5.6E6 3.41E6 8.52E6 6.4E6 **3.9E7** * Volume discharged to crib in liters.	[A] The 216-B-14 through 216-B-19 Cribs were no longer in operation, therefore this should be a summary of the final inventory.	Presents radiological inventories discharged to cribs. ***CONCLUSIONS: Will use all concentrations here in calculating the total inventory.***
RHO-CD-673 (Maxfield 1979)	BC Disposal Site received the greatest amount of radiological inventory at any one site 9.2E5 Ci beta.[A] **Crib** **14** **15** **16** **17** **18** **19** **Total** **Start** 1/56 4/56 4/56 1/56 3/56 2/57 **1/56** **Stop** 2/56 12/57 8/56 1/56 4/56 10/57 **12/57** **Pu g** 25 5 10 10 10 10 **70** **β Ci** 1.4E5 6.9E4 5.4E4 2000 5.1E4 1.1E4 **3.3E5** **Sr Ci** 400 200 700 160 190 200 **1.9E3** **Ru Ci** 5.9E4 2.2E4 1.3E4 250 1.9E4 5100 **1.2E5** **Cs Ci** 250 200 650 220 250 270 **1.8E3** **Co Ci** 5 5 5 1 5 5 **26** **U kg** 220 100 320 350 240 180 **1.4E3** **Liters** 8.71E6 6.32E6 5.6E6 3.41E6 8.52E6 6.4E6 **3.9E7**	[A] The BC disposal site was composed of more than the 216-B-14 through 216-B-19 Cribs. Presents same data as ARH-CD-371 4Q, differences in rounding only, the exceptions are underlined. Operation dates agree with HW-83718.	No new information is presented.

Table B-1. Determination of Best Available Information for 216-BC-201 Siphon Tank. (3 Pages)

Reference	Information from Cited Reference	Supporting Comments on Reference Information	Evaluation of References
PNL-6456 (Stenner et al. 1988)	216-B-14 through 19 received scavenged TBP supernatant waste from 221-U Building during uranium recovery operations, high salt, neutral/basic. Gives inventories decayed to April 1, 1986. **Crib / 14 / 15 / 16 / 17 / 18 / 19 / Total** **Start** 1/56 / 4/56 / 4/56 / 1/56 / 3/56 / 2/57 / **1/56** **Stop** 2/56 / 12/57 / 8/56 / 1/56 / 4/56 / 10/57 / **12/57** **Pu^{238} Ci** 1.43 / 2.85E-1 / 5.71E-1 / 5.71E-1 / 5.71E-1 / 5.71E-1 / **4.0** **Pu^{240} Ci** 3.85E-1 / 7.7E-2 / 1.54E-1 / 1.54E-1 / 1.54E-1 / 1.54E-1 / **1.1** **H3 Ci** 0 / 0 / 4.5E2 / 0 / 0 / 0 / **4.5E2** **β Ci** 6.21E2 / 3.91E2 / 1.29E3 / 3.61E2 / 4.2E2 / 4.56E2 / **3.5E3** **Sr Ci** 1.89E2 / 9.58E1 / 3.31E2 / 7.57E1 / 8.97E1 / 9.69E1 / **8.8E2** **Ru Ci** 4E-5 / 2E-5 / 1E-5 / 0 / 1E-5 / 1E-5 / **9E-5** **Cs Ci** 1.24E2 / 1.01E2 / 3.23E2 / 1.09E2 / 1.24E2 / 1.42E2 / **9.2E2** **Co Ci** 1.03E-1 / 1.09E-1 / 1.03E-1 / 2.04E-2 / 1.03E-1 / 1.17E-1 / **5.6E-1** **U^{238} Ci** 7.3E-2 / 3.48E-2 / 1.08E-1 / 1.19E-1 / 7.91E-2 / 6.06E-2 / **4.7E-1** **Liters** 8.71E6 / 6.32E6 / 5.6E6 / 3.41E6 / 8.52E6 / 6.4E6 / **3.9E7** **Crib / 14 / 15 / 16 / 17 / 18 / 19 / Total** **FeCN** 5E3 / 3.3E3 / 3E3 / 1.8E3 / 5E3 / 3.4E3 / **2.2E4 kg** **Na** 6E5 / 4E5 / 5E5 / 5E5 / 4E5 / 7E5 / **3.1E6 kg** **NO3** 1.5E6 / 9E5 / 1.1E6 / 1.1E6 / 1E6 / 1.5E6 / **7.1E6 kg** **PO4** 4E4 / 5E4 / 7E4 / 6E4 / 5E4 / 1E5 / **3.7E5 kg** **SO4** 5E4 / 6E4 / 1.1E5 / 9E4 / 7E4 / 9E4 / **4.7E5 kg**	Operations dates agree with HW-83718. Total volumes agree with ARH-CD-371 4Q. Appears to be RHO-CD-673 data decayed.	Presents chemical inventories discharged to cribs. ***CONCLUSIONS: Will use all chemical concentrations here in calculating the total inventory.***
BHI-00179 (DeFord and Carpenter 1995a)	Discusses the 216-B-14 through 216-B-19 Cribs. • States that radionuclides contained within the waste stream include: Cs137, Sr90, Ru106, Pu, and U (*Hanford Site Waste Management Units Report* (DOE-RL 1987), and WHC-EP-0141-2 [WHC 1990]).[A] **Crib / 14 / 15 / 16 / 17 / 18 / 19 / Total** **Start** 1/56 / 4/56 / 4/56 / 1/56 / 3/56 / 2/57 / **1/56** **Stop** 2/56 / 12/57 / 8/56 / 1/56 / 4/56 / 10/57 / **12/57** **Liters** 8.71E6 / 6.32E6 / 5.6E6 / 3.41E6 / 8.52E6 / 6.4E6 / **3.9E7** Gives chemical constituents for 216-B-14 through 19 (with qualifier stating to be "used as a guideline only" – p.4-1) – quotes PNL-6456 exactly.	[A] Not able to verify. Operations dates agree with HW-83718. Total volumes agree with ARH-CD-371 4Q.	No new information is presented.

Table B-1. Determination of Best Available Information for 216-BC-201 Siphon Tank. (3 Pages)

Reference	Information from Cited Reference	Supporting Comments on Reference Information	Evaluation of References
CCN 062352 (Cuneo and Anderson 1998)	Conservatively calculates inventory of 216-BC-201 based on average crib concentration...decays inventory 30 years, takes average concentration, multiplies by 10 for conservatism, assumes tank is full=57,000 L and multiplies. Decayed Concentrations are as follows: Pu=1.8E-6 g/L, Sr=2.4E-5 Ci/L, Ru=negligible, Cs=2.4E-5 Ci/L, Co=negligible, U=3.6E-5 kg/L. Section 6.0 presents the following rankings: H2 = L FeCN = L Org = L Heat = L Crit = L Flam = L Vapor = L Leak = L Rad = L		No new information is presented.
WIDS 1999[A]	It is estimated that 1.032E7 gal (3.896E7 l) waste flowed through 216-BC-201. At the time of discharge all six cribs held a total of 26 Ci Co-60, 1,840 Ci Cs-137, 1850 Ci Sr-90, 70 g Pu, 1,410 kg U.	Agrees with ARH-CD-371 4Q data, with minor differences in rounding. [A] Waste Information Data System, owned and operated by BHI.	No new information is presented.
Conclusions	Chemical Concentrations: PNL-6456 Radiological Concentrations: ARH-CD-371 4Q Volume of Sludge: <1,010 gal[A] Volume of Supernatant: <11,060 gal[B]	[A] The amount of sludge in the tank is unknown, but it is not considered feasible that the sludge depth could exceed 6 in. (the low water line where flushing action would stop). [B] The amount of supernate in the tank is unknown, but it cannot exceed the high water line (5 ft 6 in.) where the siphon action would have started and flushed the liquids to the 6 in. level.	Estimated Total Inventory: Sludge Volume = <1,010 gal Supernate Volume = <11,060 gal Total Volume = <11,060 gal Total Volume = <4.2E+04 l Pu: Concentration* 70 g/ 3.9E7 l; Est. Total Inventory 7.5E-2 g β: 3.3E+5 Ci/ 3.9E+7 l; 3.5E+2 Ci Sr: 1.9E+3 Ci/ 3.9E+7 l; 2 Ci Ru: 1.2E+5 Ci/ 3.9E+7 l; 1.3E+2 Ci Cs: 1.8E+3 Ci/ 3.9E+7 l; 1.9 Ci Co: 26 Ci/ 3.9E+7 l; 2.8+E-2 Ci U: 1.4E+3 kg/ 3.9E+7 l; 1.5 kg FeCN: 2.2E+4 kg/ 3.9E+7 l; 2.4E+1 kg Na: 3.1E+6 kg/ 3.9E+7 l; 3.3E+3 kg Nitrate: 7.1E+6 kg/ 3.9E+7 l; 7.6E+3 kg Phosphate: 3.7E+5 kg/ 3.9E+7 l; 4.0E+2 kg Sulfate: 4.7E+5 kg/ 3.9E+7 l; 5.0E+2 kg * Concentration is calculated by dividing the total discharge inventory by the total flow, radiological inventory is original data – no decay.

Table B-2. Evaluation of Best Available Information to Determine Relative Risk Rankings for IMUST Tank 216-BC-201. (2 Pages)

Tank Number	Tank Type	Relative Ranking on Potential Safety Issues[a, b]									Sludge Volume (gal)	Liquid Volume (gal)	Total Volume (gal)	Notes
		H_2	FeCN	Org	Heat	Crit	Flam	Vap	Leak	Rad				
216-BC-201	Siphon Tank	None Note 1	None Note 2	None Note 3	L Note 4	None Note 5	None Note 6	L Note 7	L Note 8	L Note 9	<1,010 Note 10	<11,060 Note 11	<11,060	*Estimated inventory of tank based on average concentration of discharges to 216-B-14 to 216-B-19 Cribs cited in ARH-CD-371 4Q and PNL-6456 (see Note 12).*

The following evaluation/qualitative risk ranking notes were based on a multidisciplinary peer review of the historical process chemicals, available sample data and other documents (cited in Table B-1), as described in Section A.2. The review was conducted to identify the best available information and to determine if there were any potential chemical vulnerability or other safety issues associated with the ERC IMUST tanks. The review was specifically directed toward identifying existing conditions that would have any severe consequences or conditions that could become more hazardous over time (e.g., through evaporation, chemical decomposition, or introduction of water).

NOTES:

Note 1: Hydrogen. Although liquids may still remain in the 216-BC-201 tank, the hydrogen generation rates (from either radiolytic decomposition or chemical reactions not induced by radiation) are expected to be low (i.e., the Cs, Pu, and Sr concentrations are low, the Ru would have since decayed significantly). The siphon tank was vented to atmosphere until 1981 when the vents were plugged and backfilled. Atmospheric pumping and diffusion would have promoted the removal of hydrogen. The tank is not hermetically sealed -any hydrogen generated would be expected to diffuse through the porous concrete walls. In addition, the tank is underground, isolated (as described in Section 3.0), constructed of unlined concrete, and contains no ignition sources. Accordingly, a qualitative risk ranking of NONE was assigned for hydrogen generation and buildup.

Note 2: Ferrocyanide. It is possible that trace amounts of ferrocyanide are present in the 216-BC-201 tank waste; however previous tank farm evaluation of ferrocyanide watch list tanks have not detected significant amounts of FeCN in the tanks (upstream of the siphon tank). Since FeCN was intended to precipitate materials in the tank farms, it is reasonable to conclude that the FeCN concentration of the supernatant wastes pumped through the siphon tank to the cribs is less than what is present in the tank farms. After an exhaustive study of the FeCN tanks (WHC-SD-WM-SARR-038, Rev. 1 [Meacham et al. 1996]) it was concluded that FeCN was not an issue in the tanks farms. Further, there is no indication that the high temperatures required to initiate a ferrocyanide reaction currently exist in the tank. As the conditions required to initiate a reaction are not all met, a risk ranking of NONE has been assigned.

Note 3: Organic Salt. Organic salt reactions require the presence of organic salts and high temperatures. Although there may be trace amounts of organic materials remaining in the tank, the siphon design of the tank does not allow for the formation of a floating layer. Further, there is no known heat source (either external or from internal chemical reactions) that could cause organic salt reactions.

As the conditions required to initiate a reaction are not all met, the risk ranking for an organic salt reaction is NONE.

Note 4: Heat. The Cs and Sr concentrations for estimated tank residual inventory are very low. There is no evidence that any significant heat generation is occurring in the tank. Actual or potential sources of heat (radioactive decay or chemical reactions) are insignificant and would not result in consequential changes in the tank status. Therefore, the risk ranking for high heat is LOW.

Note 5: Criticality. Based on the average concentration of discharges to the 216-B-14 through 216-B-19 Cribs, the amount of residual fissionable materials remaining in the tank is estimated to be 7.5E-02 g Pu. This amount of fissionable material is significantly less than subcritical mass limits for an optimum plutonium system and is likely to be fairly uniformly distributed through the waste matrix; accordingly, the potential for criticality is judged to be NONE.

Note 6: Flammability. As noted above, although there may be some potential for generation of very small amounts of hydrogen, there is no credible potential for hydrogen accumulation, volatilization of organics, or ignition of flammable materials. As the conditions required for a reaction are not all met, the risk ranking for flammability is ranked NONE.

Note 7: Vapor Emissions. There may be trace amounts of volatile organic or inorganic materials in the tank. However, based on the examination of waste stream records and process document, the potential for the production of noxious vapors is not considered likely. As noted above, some small amounts of hydrogen may be generated and diffused from the tank to surrounding soils. The tank is located outside with no direct paths to vent the tank, any consequences would be minimal. Therefore, the vapor emissions resulting from this are judged to be of LOW risk ranking.

Table B-2. Evaluation of Best Available Information to Determine Relative Risk Rankings for IMUST Tank 216-BC-201. (2 Pages)

Tank Number	Tank Type	Relative Ranking on Potential Safety Issues[a, b]									Sludge Volume (gal)	Liquid Volume (gal)	Total Volume (gal)	Notes
		H_2	FeCN	Org	Heat	Crit	Flam	Vap	Leak	Rad				

Note 8: Leak Potential. It is likely that some liquids may remain in the tank and the potential for degradation of a reinforced concrete tank is high. However, the quantity is much less than that which was discharged to the corresponding solid column units. Since the tank liquids were routinely discharged to the soil column (via the 216-B-14 to 216-B-19 Cribs), the impacts of this small amount of additional liquid leaking to the environment (should the tank leak) is not judged to be significant. Accordingly, the risk ranking for tank leak potential is judged to be LOW.

Note 9: Radiation. The tank is known to contain radiological material. However, the tank is below grade and shielded by several feet of soil and the potential source term is small. In the S&M state, the tank poses little to no radiation exposure to workers. The risk ranking for radiation is judged to be LOW.

Note 10: Sludge Volume. The records search did not locate any estimates for sludge volume that may remain in the tank. It is likely that some amount of sludge remains in the tank, but the waste streams entering the tank would be expected to have low solids content, and the turbulence of the siphon action would tend to resuspend particulate and flush it through to the cribs. It is not considered feasible that sludge depth could exceed 6 in. (the low water line where flushing action would stop).

Note 11: Liquid Volume. The records search did not locate any estimates for liquid volume that may remain in the tank. It is likely that some amount of liquid remains in the tank, but the amount of liquid cannot exceed the high water line (5 ft 6 in.) where the siphon action would have started and flushed the liquids to the 6 in. level.

Note 12: The records search did not locate any inventory estimates for holdup volumes or concentrations remaining in the tank, but did locate documentation for discharges through the tank to the 216-B-14 through 216-B-19 Cribs. The average waste concentration of discharges to these cribs was used to estimate the remaining average concentration of inventory remaining in the tank. Since the total volume of sludge is unknown, these average concentrations are then applied to a worst case sludge volume to determine a conservative inventory estimated. The inventory data for total discharges to the 216-B-14 through 216-B-19 Cribs (presented in ARH-CD-371 4Q) is believed to be the most accurate radionuclide constituent inventory information for materials that passed through the 216-BC-201 siphon tank, while the inventory data presented in PNL-6456 is believed to be the most accurate chemical constituent inventory information. Therefore, these two sources were used in establishing a representative inventory.

UNCERTAINTY. As noted above, there is no documentation of liquid or sludge volumes remaining in the tank. The volume is not known. However, hazards related to both minimal volume levels and maximum volume levels are considered, and the waste volume was found to be a minor issue. Potential volumes of liquids pose no more risk than the existing crib waste that surrounds the tank. The residual inventory has been estimated based on average concentrations of discharges to the downstream cribs, assuming the tank is filled to normal working capacity. This is a fairly conservative approach and provides some confidence that the estimated tank inventory is reasonable. Risk ranking decisions were based on both the potential and the consequences, using process knowledge, as detailed in Sections A.2 and A.3. The postulated concentrations did not play an important role in these determinations.

BHI RECOMMENDATION. Based on the above evaluations, BHI believes the tank does not represent either an imminent or foreseeable safety concern. BHI staff concluded that continued S&M of the tank under the RARA program represents no significant risks to the worker, public, or environment.

[a] Relative rankings: H = high; M = moderate; and L = low.
[b] Issue abbreviations:

H_2	=	hydrogen generation and buildup	Flam	=	flammability
FeCN	=	ferrocyanide reactivity	Vap	=	emission of radioactive or toxic vapors
Org	=	organic salt reactivity	Leak	=	leak potential
Heat	=	high heat	Rad	=	radioactivity.
Crit	=	criticality			

Table B-3. Determination of Best Available Information for 216-BY-201 Siphon Tank. (4 Pages)

Reference	Information from Cited Reference	Supporting Comments on Reference Information	Evaluation of References
HW-83718 (Doud 1964)	216-B-43 through 216-B-50 received U Plant scavenged wastes. **Crib** **43** **44** **45** **46** **47** **48** **49** **50** **Start** 11/54 12/54 4/55 9/55 9/55 11/55 11/55 Not used **Stop** 3/55 6/55 12/55 2/57 12/55		No information regarding inventory or volume.
ARH-947, Rev. 1 (Curren 1972)	Quotes HW-83718 exactly with exception of 216-B-50. 216-B-50 received ITS #1 condensate starting on 1/65.		No information regarding inventory or volume.
ARH-CD-371 4Q (Anderson 1976)	P. 16-18 present a summary of inventory up to 1976.[A] **Crib** **43** **44** **45** **46** **47** **48** **49** **50** **Total** **Pu g** 0.5 15 10 20 5 5 15 <2.39E-1 **71** **β Ci** 3520 2.2E4 5.3E4 1.2E5 4.5E4 6.1E4 1.1E5 241 **4.1E5** **Sr Ci** 1400 2900 2800 1500 620 1300 2700 <6 **1.3E4** **Ru Ci** 50 5500 1.7E4 2.8E4 1.9E4 6800 2.4E4 11.1 **1.0E5** **Cs Ci** 300 700 1500 200 150 450 410 87.8 **3.8E3** **Co Ci** 1 5 5 5 1 1 5 <3.31E-1 **23** **U kg** 13.6 2.27 6.8 191 6.8 2.27 318 <2.85E-1 **5.4E2** **Liters*** 2.12E6 5.6E6 4.92E6 6.7E6 3.71E6 4.09E6 6.7E6 5.48E7 **8.9E7** * Volume discharged to crib in liters.	[A] The 216-BY-43 through 50 Cribs were no longer in operation, therefore this should be a summary of the final inventory.	Presents radiological inventories discharged to cribs. ***CONCLUSIONS: Will use all concentrations here in calculating the total inventory.***
RHO-CD-673 (Maxfield 1979)	**Crib** **43** **44** **45** **46** **47** **48** **49** **50** **Total** **Start** 11/54 11/54 4/55 9/55 9/55 11/55 11/55 1/65 **11/54** **Stop** 11/54 3/55 6/55 12/55 9/55 7/57 12/57 1/74 **1/74** **Pu g** 0.5 15 10 20 5 5 15 <2.4E-1 **71** **β Ci** 3500 2.2E4 5.3E4 1.2E5 4.5E4 6.1E4 1.1E5 241 **4.1E5** **Sr Ci** 1400 2900 2800 1500 620 1300 2700 <6 **1.3E4** **Ru Ci** 50 5500 1.7E4 2.8E4 1.9E4 6800 2.4E4 11 **1.0E5** **Cs Ci** 300 700 1500 200 150 450 410 88 **3.8E3** **Co Ci** 1 5 5 5 1 1 5 <3.3E-1 **23** **U kg** 14 5.3[A] 6.8 190 6.8 2.3 320 <2.9E-1 **5.5E2** **Liters** 2.1E6 5.6E6 4.9E6 6.7E6 3.7E6 4.1E6 6.7E6 5.9E7[B] **9.3E7[B]**	A few of the operation dates differ from those given in HW-83718 – the differences are underlined. Most of the inventory values are the same as values given in ARH-CD-371 4Q, the exceptions are underlined – if not otherwise noted difference is in rounding only. [A] Believe value of U is in error, RHO-CD-673 states that as of 6/30/78 2.27 kg U remain. [B] volume is larger than given in ARH-CD-371 4Q.	Possible error in U No other new information is presented.

Table B-3. Determination of Best Available Information for 216-BY-201 Siphon Tank. (4 Pages)

Reference	Information from Cited Reference	Supporting Comments on Reference Information	Evaluation of References
PNL-6456 (Stenner et al. 1988)	The 216-B-43 through 216-B-49 Cribs received scavenged TBP supernatant waste from the 221-U Building, high salt, neutral basic. The 216-B-50 Crib received the waste storage tank condensate from the ITS #1 Unit in the 241-BY Tank Farm. Gives inventories decayed to April 1, 1986. **Crib 43 44 45 46 47 48 49 50 Total** **Start** 11/54 11/54 4/55 9/55 9/55 11/55 11/55 1/65 **11/54** **Stop** 11/54 3/55 6/55 12/55 9/55 7/57 12/55 1/74 **1/74** **Pu^{239}Ci** 2.85E-2 8.56E-1 5.71E-1 1.14 2.85E-1 2.85E-1 8.56E-1 1.36E-2 **4.04** **Pu^{240}Ci** 7.7E-3 2.31E-1 1.54E-1 3.08E-1 7.66E-2 7.7E-2 2.31E-1 3.68E-3 **1.09** **β Ci** 1.53E3 3.27E3 3.98E3 1.58E3 7.20E2 1.63E3 2.88E3 1.14E2 **1.57E4** **Sr^{90} Ci** 6.3E2 1.31E3 1.29E3 6.92E2 2.86E2 6.00E2 1.24E3 3.72 **6.1E3** **H^3 Ci** 1.7E2 4.5E2 3.9E2 5.36E2 0 3.27E2 5.36E2 9E1 **2.5E3** **Cs^{137} Ci** 1.42E2 3.36E2 7.27E2 9.69E1 7.27E1 2.18E2 1.98E2 5.58E1 **1.85E3** **Co^{60} Ci** 1.57E-2 8.48E-2 8.99E-2 8.99E-2 1.79E-2 1.79E-2 8.99E-2 2.83E-2 **4.34E-1** **U^{238} Ci** 4.56E-3 7.6E-4 2.28E-3 6.36E-2 2.28E-3 7.6E-4 1.06E-1 1E-4 **1.8E-1** **Ru^{106} Ci** 0 0 0 1E-5 0 0 1E-5 1E-5 **3E-5** **Liters** 2.12E6 5.6E6 4.92E6 6.7E6 3.71E6 4.09E6 6.7E6 5.48E7 **8.86E7** **Crib 43 44 45 46 47 48 49 50 Total** **FeCN** 1.1E3 3E3 2.6E3 4E3 2E3 2.2E3 4E3 0 **1.9E4 kg** **Na** 1.7E5 3.3E5 3.4E5 5E5 3.1E5 4E5 6E5 5E2 **2.7E6 kg** **NH4NO3** 0 0 0 0 0 0 0 1E4 **1E4 kg** **NO3** 4E5 8E5 9E5 1.2E6 7E5 1E6 1.5E6 1.5E3 **6.5E6 kg** **PO4** 2.1E4 4E4 4.1E4 7E4 4E4 6E4 6E4 0 **3.3E5 kg** **SO4** 2.9E4 6E4 6E4 1E5 6E4 8E4 8E4 0 **4.7E5 kg** **NH4CO3** 0 0 0 0 0 0 0 9.1E3 **9.1E3 kg**	Operations dates agree with RHO-CD-673 with the underlined exception (which agrees with HW-83718). Volumes agree with ARH-CD-371 4Q. Inventory appears to be RHO-CD-673 data decayed.	Presents chemical inventories discharged to cribs. ***CONCLUSIONS: Will use all chemical concentrations here in calculating the total inventory.***
DOE/RL-88-32 (DOE-RL 1989)	Quotes PNL-6456 exactly (with exception of 216-B-50 period of use given as 3/65-1/74).		No new information is presented.
WHC-SD-EN-HC-004 (Kerr 1992)	Contents of 216-B-49 represents upper limits of contaminant levels (for 216-B-43 through 50). Gives worst case estimate of the hazardous substances discharged to 216-B-49 Crib as provided by DOE/RL 88-32: Chemicals (6E5 kg sodium, 1.15E6 kg nitrate, 8E4 kg sulfate, 6E4 kg phosphate, 4E3 kg ferrocyanide)[A] Rad (0.09 Ci Co, 1240 Ci Sr, 198 Ci Cs, 0.86 Ci Pu239, 0.231 Ci Pu240, 0.102 Ci U238, etc.)[B] Attachment 3 contains ferrocyanide discussion.	[A] DOE/RL 88-32 actually gives 1.5E6 kg nitrate. [B] Decayed 4/1/86 – DOE/RL 88-32 actually gives 0.106 Ci U238 and also lists 536 Ci H3, 2880 Ci beta, and 1E05 Ci Ru106.	No new information is presented.

Table B-3. Determination of Best Available Information for 216-BY-201 Siphon Tank. (4 Pages)

Reference	Information from Cited Reference	Supporting Comments on Reference Information	Evaluation of References
BHI-00179 (DeFord and Carpenter 1995a)	Discusses the 216-B-43 through 216-B-50 Cribs. **Crib** **43** **44** **45** **46** **47** **48** **49** **50** **Total** **Start** 11/54 11/54 4/55 9/55 9/55 11/55 11/55 1/65 **11/54** **Stop** 11/54 3/55 6/55 12/55 9/55 11/55 12/55 1/74 **1/74** **Liters** 2.1E6 5.6E6 4.9E6 6.7E6 3.7E6 4.1E6 6.7E6 5.5E7 **8.9E7** Gives chemical constituents for 216-B-43 through 50 (with qualifier stating to be "used as a guideline only" –p.3-1). **Crib** **43** **44** **45** **46** **47** **48** **49** **50** **Total** **FeCN** 1.1E3 3E3 2.6E3 4E3 2E3 2.2E3 4E3 0 1.9E4 kg **Na** 1.7E5 3.3E5 3.4E5 5E5 3.1E5 4E5 6E5 5E2 2.7E6 kg **NH4NO3** 0 0 0 0 0 0 0 1E4 1E4 kg **NO3** 4E5 8E5 9E4[A] 1.2E6 7E5 1E6 1.5E6 1.5E3 5.7E6 kg[A] **PO4** 2.1E4 4E4 4.1E4 7E4 4E4 6E4 6E4 0 3.3E5 kg **S-acid*** 2.9E4 6E4 6E4 1E5 6E4 8E4 8E4 0 4.7E5 kg **NH4CO3**[B] * Sulfamic Acid.	Dates are similar to HW-83718 and RHO-CD-673 but not the same. [A] Quantity of nitrate in 216-B-45 is an order of magnitude less than PNL-6456. [B] Ignores presence of ammonium carbonate given in PNL-6456.	Information less reliable, no new information is presented.
DOE/RL-95-59 (DOE-RL 1995)	Table 5-2 Decayed through 12/31/89, except if underlined then decayed through 4/1/86. **Crib** **43-49** **50** **Total** **Co60** 4.06E-2[A] 2.83E-2 6.89E-2 Ci **Sr90** 4.43E2 3.39 4.46E2 Ci **Cs137** 1.64E3 5.12E1 1.69E3 Ci **Total Pu (g)** 7.05E1 2.39E-1 7.07E1 g **Pu239** 1.01E3[B] 1.36E-2 1.01E3 Ci **Pu240** 1.09 3.68E-3 1.09 Ci **Total U** 1.8E-1 9.5E-5 1.8E-1 Ci **H3** 2.41E3 9E1 2.5E3 Ci **Alpha** 2.65E2 1.47E-2 2.65E2 Ci **Beta** 1.04E4 1.05E2 1.05E4 Ci **U-238** 1.8E-1 1E-4 1.8E-1 Ci **Crib** **43-49** **50** **Total** **FeCN** 2.27E4 0 2.27E4 kg[C] **Na** 2.65E6 5E2 2.65E6 kg **NH4CO3** 0 9.1E4 9.1E4 kg **NH4NO3** 0 1E4 1E4 kg **NO3** 5.69E6 1.5E3 5.69E6 kg **PO4** 3.32E5 0 3.32E5 kg **SO4** 4.69E5 0 4.69E5 kg The 216-B-43 through 216-B-49 Cribs operated from 11/54-12/55 and received 3.4E7 l of waste. The 216-B-50 Crib operated from 1965-1974 and received 6.06E7 l of waste.[D]	[A] The total inventory is an order of magnitude less than the total inventories of PNL-6456. [B] Quantity of Pu is 250 times greater than that given in PNL-6456. [C] Quantity of FeCN does NOT agree with PNL 6456. [D] Total = 9.5E7 l.	Provides no technical basis for quantity of FeCN, data is suspect.

Table B-3. Determination of Best Available Information for 216-BY-201 Siphon Tank. (4 Pages)

Reference	Information from Cited Reference	Supporting Comments on Reference Information	Evaluation of References
WIDS 1999[A]	No inventory data.	[A] Waste Information Data System, owned and operated by BHI.	No new information is presented.
Conclusions	Chemical Concentrations: PNL-6456 Radiological Concentrations: ARH-CD-371 4Q Volume of Sludge: <750 gal[A] Volume of Supernatant: <8,230 gal[B]	[A] The amount of sludge in the tank is unknown, but it is not considered feasible that the sludge depth could exceed 6 in. (the low water line where flushing action would stop). [B] The amount of supernate in the tank is unknown, but it cannot exceed the high water line (5 ft 6 in.) where the siphon action would have started and flushed the liquids to the 6 in. level.	Estimated Total Inventory: Sludge Volume = <750 gal Supernate Volume = <8,230 gal Total Volume = <8,230 gal Total Volume = <3 1E+04 l Total Concentration* / Inventory / Est. Pu: 71 g/ 8.9E+7 l, 2.5E-2 g β Ci: 4.1E+5 Ci/ 8.9E+7 l, 1.4E+2 Sr: 1.3E+4 Ci/ 8.9E+7 l, 4.6 Ci Ru Ci: 1.0E+5 Ci/8.9E+7 l, 3.5E+1 Cs: 3.8E+3 Ci/ 8.9E+7 l, 1.3 Ci Co Ci: 23 Ci/ 8.9E+7 l, 8.1E-3 U kg: 5.4E+2 kg/ 8.9E+7 l, 1.9E-1 FeCN: 1.9E+4 kg/ 8.9E+7 l, 6.7 kg Na kg: 2.7E+6 kg/ 8.9E+7 l, 9.5E+2 Nitrate kg: 6.5E+6 kg/ 8.9E+7 l, 2.3E+3 Phosphate kg: 3.3E+5 kg/ 8.9E+7 l, 1.2E+2 Sulfate kg: 4.7E+5 kg/ 8.9E+7 l, 1.6E+2 NH4NO3: 1E+4 kg/ 8.9E+7 l, 3.5 kg NH4CO3: 9.1E+3 kg/ 8.9E+7 l, 3.2 kg * Concentration is calculated by dividing the total discharge inventory by the total flow, radiological inventory is original data – no decay.

Table B-4. Evaluation of Best Available Information to Determine Relative Risk Rankings for IMUST Tank 216-BY-201. (2 Pages)

Tank Number	Tank Type	Relative Ranking on Potential Safety Issues[a,b]									Sludge Volume (gal)	Liquid Volume (gal)	Total Volume (gal)	Notes
		H_2	FeCN	Org	Heat	Crit	Flam	Vap	Leak	Rad				
216-BY-201	Siphon Tank	None Note 1	None Note 2	None Note 3	L Note 4	None Note 5	None Note 6	L Note 7	L Note 8	L Note 9	<750 Note 10	<8,230 Note 11	<8,230	*Estimated inventory of tank based on average concentration of discharges to 216-B-14 to 216-B-19 Cribs cited in ARH-CD-371 4Q and PNL-6456 (see Note 12).*

The following evaluation/qualitative risk ranking notes were based on a multidisciplinary peer review of the historical process chemicals, available sample data and other documents (cited in Table B-3) as described in Section A.2. The review was conducted to identify the best available information and to determine if there were any potential chemical vulnerability or other safety issues associated with the ERC IMUST tanks. The review was specifically directed toward identifying existing conditions that would have any severe consequences or conditions that could become more hazardous over time (e.g., through evaporation, chemical decomposition, or introduction of water).

NOTES:

Note 1: Hydrogen. Although liquids may still remain in the 216-BY-201 tank, the hydrogen generation rates (from either radiolytic decomposition or chemical reactions not induced by radiation) are expected to be low (i.e., the Cs, Pu, and Sr concentrations are low). The tank is not hermetically sealed -any hydrogen generated would be expected to diffuse through the porous concrete walls. In addition, the tank is underground, isolated (as described in Section 3.0), constructed of unlined concrete, and contains no ignition sources. Accordingly, a qualitative risk ranking of NONE was assigned for hydrogen generation and buildup.

Note 2: Ferrocyanide. It is possible that trace amounts of ferrocyanide are present in the 216-BY-201 tank waste; however previous tank farm evaluation of ferrocyanide watch list tanks have not detected significant amounts of FeCN in the tanks (upstream of the siphon tank). Since FeCN was intended to precipitate materials in the tank farms, it is reasonable to conclude that the FeCN concentration of the supernatant wastes pumped through the siphon tank to the cribs is less than what is present in the tank farms. After an exhaustive study of the FeCN tanks (WHC-SD-WM-SARR-038, Rev. 1 [Meacham et al. 1996]) it was concluded that FeCN was not an issue in the tanks farms. Further, there is no indication that the high temperatures required to initiate a ferrocyanide reaction currently exist in the tank. As the conditions required to initiate a reaction are not all met, a risk ranking of NONE has been assigned.

Note 3: Organic Salt. Organic salt reactions require the presence of organic salts and high temperatures. Although there may be trace amounts of organic materials remaining in the tank, the siphon design of the tank does not allow for the formation of a floating layer. Further, there is no known heat source (either external or from internal chemical reactions) that could cause organic salt reactions. As the conditions required to initiate a reaction are not all met, the risk ranking for an organic salt reaction is NONE.

Note 4: Heat. The Cs and Sr concentrations for the estimated tank residual inventory are very low. There is no evidence that any significant heat generation is occurring in the tank. Actual or potential sources of heat (radioactive decay or chemical reactions) are insignificant and would not result in consequential changes in the tank status. Therefore, the risk ranking for high heat is LOW.

Note 5: Criticality. Based on the average concentration of discharges to the 216-B-43 through 216-B-50 Cribs, the amount of residual fissionable materials remaining in the tank is estimated to be 2.5E-02 g Pu. This amount of fissionable material is significantly less than subcritical mass limits for an optimum plutonium system and is likely to be fairly uniformly distributed through the waste matrix; accordingly, the potential for criticality is judged to be NONE.

Note 6: Flammability. As noted above, although there may be some potential for generation of very small amounts of hydrogen, there is no credible potential for hydrogen accumulation, volatilization of organics, or ignition of flammable materials. As the conditions required for a reaction are not all met, the risk ranking for flammability is ranked NONE.

Note 7: Vapor Emissions. There may be trace amounts of volatile organic or inorganic materials in the tank. However, based on the examination of waste stream records and process documents, the potential for the production of noxious vapors is not considered likely. Consequences: As noted above, some small amounts of hydrogen may be generated and diffused from the tank to surroundings soils. The tank is located outside with no direct paths to vent the tank, any consequences would be minimal. Therefore, the vapor emissions resulting from this are judged to be of LOW risk ranking.

Table B-4. Evaluation of Best Available Information to Determine Relative Risk Rankings for IMUST Tank 216-BY-201. (2 Pages)

Tank Number	Tank Type	Relative Ranking on Potential Safety Issues[a,b]									Sludge Volume (gal)	Liquid Volume (gal)	Total Volume (gal)	Notes
		H_2	FeCN	Org	Heat	Crit	Flam	Vap	Leak	Rad				

Note 8: Leak Potential. It is likely that some liquids may remain in the tank and the potential for degradation of a reinforced concrete tank is high. However, the quantity is much less than that which was discharged to the corresponding solid column units. Since the tank liquids were routinely discharged to the soil column (via the 216-B-43 to 216-B-50 Cribs), the impacts of this small amount of additional liquid leaking to the environment (should the tank leak) is not judged to be significant. Accordingly, the risk ranking for tank leak potential is judged to be LOW.

Note 9: Radiation. The tank is known to contain radiological material. However, the tank is below grade and shielded by several feet of soil and the potential source term is small. In the S&M state, the tank poses little to no radiation exposure to workers. The risk ranking for radiation is judged to be LOW.

Note 10: Sludge Volume. The records search did not locate any estimates for sludge volume that may remain in the tank. It is likely that some amount of sludge remains in the tank, but the waste streams entering the tank would be expected to have low solids content, and the turbulence of the siphon action would tend to resuspend particulate and flush it through to the cribs. It is not considered feasible that sludge depth could exceed 6 in. (the low water line where flushing action would stop).

Note 11: Liquid Volume. The records search did not locate any estimates for liquid volume that may remain in the tank. It is likely that some amount of liquid remains in the tank, but the amount of liquid cannot exceed the high water line (5 ft 6 in.) where the siphon action would have started and flushed the liquids to the 6 in. level.

Note 12: The records search did not locate any inventory estimates for holdup volumes or concentrations remaining in the tank, but did locate documentation for discharges through the tank to the 216-B-43 through 216-B-50 Cribs. The average waste concentration of discharges to these cribs was used to estimate the remaining average concentration of inventory remaining in the tank. Since the total volume of sludge is unknown, these average concentrations are then applied to a worst case sludge volume to determine a conservative inventory estimated. The inventory data for total discharges to the 216-B-43 through 216-B-50 Cribs (presented in ARH-CD-371 4Q) is believed to be the most accurate radionuclide constituent inventory information for materials that passed through the 216-BY-201 siphon tank, while the inventory data presented in PNL-6456 is believed to be the most accurate chemical constituent inventory information. Therefore, these two sources were used in establishing a representative inventory.

UNCERTAINTY. As noted above, there is no documentation of liquid or sludge volumes remaining in the tank. The volume is not known. However, hazards related to both minimal volume levels and maximum volume levels are considered, and the waste volume was found to be a minor issue. Potential volumes of liquids pose no more risk than the existing crib waste that surrounds the tank. The residual inventory has been estimated based on average concentrations of discharges to the downstream cribs, assuming the tank is filled to normal working capacity. This is a fairly conservative approach and provides some confidence that the estimated tank inventory is reasonable. Risk ranking decisions were based on both the potential and the consequences, using process knowledge, as detailed in Sections A.2 and A.3. The postulated concentrations did not play an important role in these determinations.

BHI RECOMMENDATION. Based on the above evaluations, BHI believes the tank does not represent either an imminent or foreseeable safety concern. BHI staff concluded that continued S&M of the tank under the RARA program represents no significant risks to the worker, public, or environment.

[a] Relative rankings: H = high; M = moderate; and L = low.
[b] Issue abbreviations:

H_2	=	hydrogen generation and buildup	Flam	=	flammability
FeCN	=	ferrocyanide reactivity	Vap	=	emission of radioactive or toxic vapors
Org	=	organic salt reactivity	Leak	=	leak potential
Heat	=	high heat	Rad	=	radioactivity.
Crit	=	criticality			

Table B-5. Determination of Best Available Information for 216-TY-201 Siphon Tank. (5 Pages)

Reference	Information from Cited Reference	Supporting Comments on Reference Information	Evaluation of References
HW-83718 (Doud 1964)	The 216-T-26 and 216-T-27 Cribs received scavenged wastes. The 216-T-28 Crib received 221-T decontamination waste. **Crib** **26** **27** **28** **Start** 8/55 not used 2/60[A] **Stop** 11/56 not used	[A] The 216-T-28 Crib was still active when this document was written.	No information regarding inventory or volume.
ARH-947, Rev. 1 (Current 1972)	The 216-T-26 through 216-T-28 Cribs received waste types as given in HW-83718. **Crib** **26** **27** **28** **Start** 8/55 9/65 2/60 **Stop** 11/56 11/65 12/66	All cribs inactive.	No information regarding inventory or volume.
ARH-CD-371 4Q (Anderson 1976)	P. 25-26 present a summary of inventory up to 1976[A] **Crib** **26** **27** **28** **Total** **Start** 8/55 9/65 2/60 **8/55** **Stop** 11/56 11/65 12/66 **12/66** **Pu g** 59 13 70 **1.4E2** **β Ci** 2.9E4 3.6E3 5.85E4 **9.11E4** **Sr Ci** 6.7E2 1.4E2 2.0E2 **1.0E3** **Ru Ci** 2.6E3 1.5E3 1.0E3 **5.1E3** **Cs Ci** 1.7E2 1.0E2 3.5E2 **6.2E2** **Co Ci** 1 1 5 **7** **U kg** 1.5E2 7.26 3.91E2 **5.48E2** **Liters*** 1.2E7 7.19E6 4.23E7 **6.1E7** * Volume discharged to crib in liters.	[A] The 216-T-26 through 216-T-28 Cribs were no longer in operation, therefore this should be a summary of the final inventory. Operations dates agree with ARH-947.	Presents radiological inventories discharged to cribs. ***CONCLUSIONS: Will use all concentrations here in calculating the total inventory.***
RHO-CD-673 (Maxfield 1979)	**Crib** **26** **27** **28** **Total** **Start** 8/55 9/65 2/60 **8/55** **Stop** 11/56 11/65 12/66 **12/66** **Pu g** 59 13 70 **1.4E2** **β Ci** 2.9E4 3.6E3 <u>5.9E4</u> **<u>9.2E4</u>** **Sr Ci** 6.7E2 1.4E2 2.0E2 **1.0E3** **Ru Ci** 2.6E3 1.5E3 1.0E3 **5.1E3** **Cs Ci** 1.7E2 1.0E2 3.5E2 **6.2E2** **Co Ci** 1 1 5 **7** **U kg** 1.5E2 <u>7.3</u> <u>3.9E2</u> **<u>5.5E2</u>** **Liters** 1.2E7 7.19E6 4.23E7 **6.1E7**	Presents the same data as ARH-CD-371 4Q, differences in rounding only, the exceptions are underlined. Operation dates agree with ARH-947.	No new information is presented.

Table B-5. Determination of Best Available Information for 216-TY-201 Siphon Tank. (5 Pages)

Reference	Information from Cited Reference	Supporting Comments on Reference Information	Evaluation of References
PNL-6456 (Stenner et al. 1988)	The 216-T-26 Crib received first cycle scavenged TBP supernatant waste from the 221-T Building via the 101, 103 and 104-TY tanks in the 241-TY Tank Farm, high salt, neutral/basic. The 216-T-27 Crib received 300 Area laboratory waste from the 340 facility, low salt, neutral/basic. The 216-T-28 Crib. 2/60-2/63 received steam condensate decon. waste and miscellaneous effluents from 221-T via the 112-T tank in the 241-T Tank Farm. 2/63-9/63 received the above and decon. waste from 2706-T Building. 9/63-7/64 received the above and 300 Area laboratory waste from 340. 7/64-5/66 received the steam condensate decon. waste and miscellaneous waste from the 221-T Building via the 112-T tank in the 241-T Tank Farm and 300 Area laboratory waste from 340 facility (rerouted decon waste from the 2706 Building to the 216-T-4 Ditch). 5/66-12/66 received steam condensate decon. waste and miscellaneous waste from the 221-T Building via the 112-T tank in the 241-T Tank Farm (rerouted 300 Area laboratory waste from the 340 facility to the 216-T-34 Crib). Gives inventories decayed to April 1, 1986. **Crib** **26** **27** **28** **Total** **Start** 8/55 9/65 2/60 **8/55** **Stop** 11/56 11/65 12/66 **12/66** **Co Ci** 1.89E-2 6.7E-2 3.19E-1 **4.0E-1** **Cs Ci** 8.25E1 6.09E1 2.10E2 **3.2E2** **Pu^{239} Ci** 3.37 7.42E-1 4 **8.1** **Pu^{240} Ci** 9.08E-1 2E-1 1.08 **2.2** **Ru Ci** 0 5.5E-4 2.6E-4 **6.1E-5** **Sr Ci** 3.09E2 8.26E1 1.16E2 **4.6E2** **U^{238} Ci** 5.03E-2 2.43E-3 1.31E-1 **1.8E-1** **β Ci** 7.82E2 2.82E2 6.67E2 **4.6E2** **Liters** 1.2E7 7.19E6 4.23E7 **6.1E7**	Operations dates agree with ARH-947. Volumes agree with ARH-CD-371 4Q. Radiological inventory appears to be RHO-CD-673 data decayed.	Presents chemical inventories discharged to cribs. ***CONCLUSIONS: Will use all chemical concentrations here in calculating the total inventory.***

Table B-5. Determination of Best Available Information for 216-TY-201 Siphon Tank. (5 Pages)

Reference	Information from Cited Reference	Supporting Comments on Reference Information	Evaluation of References
PNL-6456 (Stenner et al. 1988)	**Crib** **26** **27** **28** **Total** **FeCN** 6E3 0 0 **6E3 kg** **Fluoride** 3E4 0 0 **3E4 kg** **Na** 7E5 0 0 **7E5 kg** **NaOH** 1E5 0 0 **1E5 kg** **Nitrate** 1E6 1E3 1E4 **1E6 kg** **Nitrite** 1.1E5 0 0 **1.1E5 kg** **Phosphate** 2.3E5 0 0 **2.3E5 kg** **NaAl** 1E5 0 0 **1E5 kg** **NaSi** 4E4 0 0 **4E4 kg** **Sulfate** 5E4 0 0 **5E4 kg**		
DOE/RL-92-16 (DOE-RL 1993)	Inventory decayed to 12/31/89. **Crib** **26** **27** **28** **Total** **Co Ci** 1.89-2 6.7E-2 3.19E-1 **4.0E-1** **Cs Ci** 7.56E1 5.59E1 1.93E2 **3.2E2** **Pu^{239} Ci** 3.37 7.42E-1 4 **8.1** **Pu^{240} Ci** 9.08E-1 2E-1 1.08 **2.2** **Pu g** 59 13 70 **1.4E2** **Ru Ci** 8.02E-8 4.09E-5 1.96E-5 **6.1E-5** **Sr Ci** 2.82E2 7.53E1 1.06E2 **4.6E2** **U^{238} Ci** 5.03E-1[A] 2.43E-3 1.31E-1 **6.4E-1[A]** **Liters** 1.2E7 7.19E6 4.23E7 **6.1E7** Quotes chemical inventories given in PNL-6456. 216-T-26 Years in Service = 1955-1956 Received first-cycle scavenged TBP supernatant waste Total fluid volume received = 12,000 m^3 (states this represents the current volume of tank). 216-T-27 Years in Service = 1965 Received 300 Area laboratory waste from 340 facility Total fluid volume received = 7,190 m^3 (states this represents the current volume of tank). 216-T-28 Years in Service = 1960-1966 Received steam condensate decontamination waste, laboratory waste, miscellaneous waste via tank farm Total fluid volume received = 42,300 m^3 (states this represents the current volume of tank).	[A] The inventory of U238 in the 216-T-26 Crib appears to be off by a magnitude of order. Operation dates agree with ARH-947. Volume agrees with ARH-CD-371 4Q. Appears to be ARH-CD-371 4Q radiological content decayed (with the exception of U concentration).	No new information is presented.

Table B-5. Determination of Best Available Information for 216-TY-201 Siphon Tank. (5 Pages)

Reference	Information from Cited Reference	Supporting Comments on Reference Information	Evaluation of References
BHI-00177 (DeFord and Carpenter 1995b)	**Crib** 26 27 28 **Total** **Start** 8/55 9/65 2/60 **8/55** **Stop** 11/56 11/65 2/66[A] **2/66**[A] **Liters** 1.2E7 7.19E6 4.23E7 **6.1E7** Quotes chemical inventories given in PNL-6456 for 216-T-26 through 28	[A] Stop date does NOT agree with ARH-947.	No new information is presented.
HNF-SD-WM-ER-699 (McCain 1998)	Postulates contents of tank 241-T-112. Gives listing of major transfers (p. A-9). 241-T-112 received waste from 241-T-111 and 221-T before transfer to TY Cribs – (second cycle waste from BiPO4 process [T Plant], lanthum fluoride finishing waste) and wash solution from equipment decontamination at T Plant. 241-T-112 received waste from 241-TX-118, miscellaneous sources, and 241-T-106 after transfer to TY Cribs (supernatant waste and flush water).		Tank 241-T-112 received many different sources of waste after discharging to the TY Crib. The current contents of the tank are not necessarily representative of what is in 216-TY-201.
HNF-2503 (Stickney and Lipke 1998)	Supernate liquid from the 241-TY Tank Farm system overflowed to 216-TY-201 en route to the cribs from 1953 to 1955. From 1955, 216-TY-201 was used for supernate en route from 241-T-112 to 216-T Cribs. • There should be no organic or explosive materials in this IMUST (HNF-SD-WM-ER-699). Based on the review of data 216-TY-201 may contain more than incidental quantities of organic materials.[A] Content unknown, but based on low water line of 6 in., it is estimated that the remaining volume could be 638 gal at the time of isolation, possible some or all of liquid has evaporated leaving only sludge. Pages B-24 and B-25 gives concentrations for 241-T-112, and postulates that contents of 216-TY-201 are similar/same. Some of the concentrations are as follows: Sludge – 5,110 µg/g Al, 28,800 µg/g Bi, 16,400 µg/g Fe, 41,000 µg/g Na, 395 µg/g Pb, 313 µg/g Sr, 3,100 µg/g U, 36,600 µg/g OH, 0.184 µCi/g Cs-137, 6 µCi/g Sr-90, 5.71E-4 µCi/g Pu-238, 0.07 µCi/g Pu-239, 1E-4 µCi/g Am241 Supernate - 44 µg/ml Bi, 57,200 µg/ml Na, 46 µg/ml Pb, 9,800 µg/ml OH, 9E-6 µCi/g Am241	[A] This seems to contradict statement made above. Concentrations within tank 241-T-112 are generally higher than those which flowed through the 216-T-26 through 216-T-28 Cribs presented in ARH-CD-371 4Q. 241-T-112 inventory composed of a variety of sources (only a small percentage went to TY Crib).	Tank 241-T-112 received many different sources of waste after discharging to the TY Crib. The current contents of the tank are not necessarily representative of what is in 216-TY-201.
WIDS 1999[A]	• Based on low water line of 6 in., remaining volume could be 638 gal (HNF-2503). Quotes solid and liquid compositions given in HNF-SD-ER-699 and HNF-2503.	[A] Waste Information Data System, owned and operated by BHI.	No new information is presented.

Table B-5. Determination of Best Available Information for 216-TY-201 Siphon Tank. (5 Pages)

Reference	Information from Cited Reference	Supporting Comments on Reference Information	Evaluation of References
Conclusions	Chemical Concentrations: PNL-6456 Radiological Concentrations: ARH-CD-371 4Q Volume of Sludge: <750 gal[A] Volume of Supernatant: <8,230 gal[B]	[A] The amount of sludge in the tank is unknown, but it is not considered feasible that the sludge depth could exceed 6 in. (the low water line where flushing action would stop). [B] The amount of supernate in the tank is unknown, but it cannot exceed the high water line (5 ft 6 in.) where the siphon action would have started and flushed the liquids to the 6 in. level.	Estimated Total Inventory: Sludge Volume = <750 gal Supernate Volume = <8,230 gal Total Volume = <8,230 gal Total Volume = <3.1E+04 l Concentration* / Est. Total Inventory Pu 1.4E+2 g/ 6.1E+7 l 7.1E-02 g β 9.11E+4 Ci/ 6.1E+7 l 4.7E+01 Ci Sr 1.0E+3 Ci/ 6.1E+7 l 5.1E-01 Ci Ru 5.1E+3 Ci/ 6.1E+7 l 2.6E+00 Ci Cs 6.2E+2 Ci/ 6.1E+7 l 3.2E-01 Ci Co 7 Ci/ 6.1E+7 l 3.6E-03 Ci U 5.48E+2 kg/ 6.1E+7 l 2.8E-01 kg FeCN 6E+3 kg/ 6.1E+7 l 3.1E+00 kg Fluoride 3E+4 kg/ 6.1E+7 l 1.5E+01 kg Na 7E+5 kg/ 6.1E+7 l 3.6E+02 kg NaOH 1E+5 kg/ 6.1E+7 l 5.1E+01 kg Nitrate 1E+6 kg/ 6.1E+7 l 5.1E+02 kg Nitrite 1.1E+5 kg/ 6.1E+7 l 5.6E+01 kg Phosphate 2.3E+5 kg/ 6.1E+7 l 1.2E+02 kg NaAl 1E+5 kg/ 6.1E+7 l 5.1E+01 kg NaSi 4E+4 kg/ 6.1E+7 l 2.0E+01 kg Sulfate 5E+4 kg/ 6.1E+7 l 2.6E+01 kg * Concentration is calculated by dividing the total discharge inventory by the total flow, radiological inventory is original data – no decay.

Table B-6. Evaluation of Best Available Information to Determine Relative Risk Rankings for IMUST Tank 216-TY-201. (2 Pages)

Tank Number	Tank Type	Relative Ranking on Potential Safety Issues[a,b]									Sludge Volume (gal)	Liquid Volume (gal)	Total Volume (gal)	Notes
		H_2	FeCN	Org	Heat	Crit	Flam	Vap	Leak	Rad				
216-TY-201	Siphon Tank	None Note 1	None Note 2	None Note 3	L Note 4	None Note 5	None Note 6	L Note 7	L Note 8	L Note 9	<750 Note 10	<8,230 Note 11	<8,230	*Estimated inventory of tank based on average concentration of discharges to 216-T-26 to 216-T-28 Cribs cited in ARH-CD-371 4Q and PNL-6456 (see Note 12).*

The following evaluation/qualitative risk ranking notes were based on a multidisciplinary peer review of the historical process chemicals, available sample data and other documents (cited in Table B-5) as described in Section A.2. The review was conducted to identify the best available information and to determine if there were any potential chemical vulnerability or other safety issues associated with the ERC IMUST tanks. The review was specifically directed toward identifying existing conditions that would have any severe consequences or conditions that could become more hazardous over time (e.g., through evaporation, chemical decomposition, or introduction of water).

NOTES:

Note 1: Hydrogen. Although liquids may still remain in the 216-TY-201 tank, the hydrogen generation rates (from either radiolytic decomposition or chemical reactions not induced by radiation) are expected to be low (i.e., the Cs, Pu, and Sr concentrations are low). The tank is not hermetically sealed -any hydrogen generated would be expected to diffuse through the porous concrete walls. In addition, the tank is isolated (as described in Section 3.0), constructed of unlined concrete, and contains no ignition sources. Accordingly, a qualitative risk ranking of NONE was assigned for hydrogen generation and buildup.

Note 2: Ferrocyanide. It is possible that trace amounts of ferrocyanide are present in the 216-TY-201 tank waste; however previous tank farm evaluation of ferrocyanide watch list tanks have not detected significant amounts of FeCN in the tanks (upstream of the siphon tank). Since FeCN was intended to precipitate materials in the tank farms, it is reasonable to conclude that the FeCN concentration of the supernatant wastes pumped through the siphon tank to the cribs is less than what is present in the tank farms. After an exhaustive study of the FeCN tanks (WHC-SD-WM-SARR-038, Rev. 1 [Meacham et al. 1996]) it was concluded that FeCN was not an issue in the tanks farms. Further, there is no indication that the high temperatures required to initiate a ferrocyanide reaction currently exist in the tank. As the conditions required to initiate a reaction are not all met, a risk ranking of NONE has been assigned.

Note 3: Organic Salt. Organic salt reactions require the presence of organic salts and high temperatures. Although there may be trace amounts of organic materials remaining in the tank, the siphon design of the tank does not allow for the formation of a floating layer. Further, there is no known heat source (either external or from internal chemical reactions) that could cause organic salt reactions.

As the conditions required to initiate a reaction are not all met, the risk ranking for an organic salt reaction is NONE.

Note 4: Heat. The Cs and Sr concentrations for the estimated tank residual inventory are very low. There is no evidence that any significant heat generation is occurring in the tank. Actual or potential sources of heat (radioactive decay or chemical reactions) are insignificant and would not result in consequential changes in the tank status. Therefore, the risk ranking for high heat is LOW.

Note 5: Criticality. Based on the average concentration of discharges to the 216-T-26 through 216-T-28 Cribs, the amount of residual fissionable materials remaining in the tank is estimated to be 7.1 E-02 g Pu. This amount of fissionable material is significantly less than subcritical mass limits for an optimum plutonium system and is likely to be fairly uniformly distributed through the waste matrix; accordingly, the potential for criticality is judged to be NONE.

Note 6: Flammability. As noted above, although there may be some potential for generation of very small amounts of hydrogen, there is no credible potential for hydrogen accumulation, volatilization of organics, or ignition of flammable materials. As the conditions required for a reaction are not all met, the risk ranking for flammability is NONE.

Note 7: Vapor Emissions. There may be trace amounts of volatile organic or inorganic materials in the tank. However, based on the examination of waste stream records and process documents, the potential for the production of noxious vapors is not considered likely. As noted above, some small amounts of hydrogen may be generated and diffused from the tank. The tank is located outside with no direct paths to vent the tank, any consequences would be minimal. Therefore, the vapor emissions resulting from this are judged to be of LOW risk ranking.

Table B-6. Evaluation of Best Available Information to Determine Relative Risk Rankings for IMUST Tank 216-TY-201. (2 Pages)

Tank Number	Tank Type	Relative Ranking on Potential Safety Issues[a,b]									Sludge Volume (gal)	Liquid Volume (gal)	Total Volume (gal)	Notes
		H_2	FeCN	Org	Heat	Crit	Flam	Vap	Leak	Rad				

Note 8: Leak Potential. It is likely that some liquids may remain in the tank and the potential for degradation of a reinforced concrete tank is high. However, the quantity is much less than that which was discharged to the corresponding solid column units. Since the tank liquids were routinely discharged to the soil column (via the 216-T-26 to 216-T-28 Cribs), the impacts of this small amount of additional liquid leaking to the environment (should the tank leak) is not judged to be significant. Accordingly, the risk ranking for tank leak potential is judged to be LOW.

Note 9: Radiation. The tank is known to contain radiological material. However, the tank is below grade and shielded by several feet of soil and the potential source term is small. In the S&M state, the tank poses little to no radiation exposure to workers. The risk ranking for radiation is judged to be LOW.

Note 10: Sludge Volume. The records search did not locate any estimates for sludge volume that may remain in the tank. It is likely that some amount of sludge remains in the tank, but the waste streams entering the tank would be expected to have low solids content, and the turbulence of the siphon action would tend to resuspend particulate and flush it through to the cribs. It is not considered feasible that sludge depth could exceed 6 in. (the low water line where flushing action would stop).

Note 11: Liquid Volume. The records search did not locate any estimates for liquid volume that may remain in the tank. It is likely that some amount of liquid remains in the tank, but the amount of liquid cannot exceed the high water line (5 ft 6 in.) where the siphon action would have started and flushed the liquids to the 6 in. level.

Note 12: The records search did not locate any inventory estimates for holdup volumes or concentrations remaining in the tank, but did locate documentation for discharges through the tank to the 216-T-26 through 216-T-28 Cribs. The average waste concentration of discharges to these cribs was used to estimate the remaining average concentration of inventory remaining in the tank. Since the total volume of sludge is unknown, these average concentrations are then applied to a worst case sludge volume to determine a conservative inventory estimated. The inventory data for total discharges to the 216-T-26 through 216-T-28 Cribs (presented in ARH-CD-371 4Q) is believed to be the most accurate radionuclide constituent inventory information for materials that passed through the 216-TY-201 siphon tank, while the inventory data presented in PNL-6456 is believed to be the most accurate chemical constituent inventory information. Therefore, these two sources were used in establishing a representative inventory.

UNCERTAINTY. As noted above, there is no documentation of liquid or sludge volumes remaining in the tank. The volume is not known. However, hazards related to both minimal volume levels and maximum volume levels are considered, and the waste volume was found to be a minor issue. Potential volumes of liquids pose no more risk than the existing crib waste that surrounds the tank. The residual inventory has been estimated based on average concentrations of discharges to the downstream cribs, assuming the tank is filled to normal working capacity. This is a fairly conservative approach and provides some confidence that the estimated tank inventory is reasonable. Risk ranking decisions were based on both the potential and the consequences, using process knowledge, as detailed in Sections A.2 and A.3. The postulated concentrations did not play an important role in these determinations.

BHI RECOMMENDATION. Based on the above evaluations, BHI believes the tank does not represent either an imminent or foreseeable safety concern. BHI staff concluded that continued S&M of the tank under the RARA program represents no significant risks to the worker, public, or environment.

[a] Relative rankings: H = high; M = moderate; and L = low.
[b] Issue abbreviations:

H_2	=	hydrogen generation and buildup	Flam	=	flammability
FeCN	=	ferrocyanide reactivity	Vap	=	emission of radioactive or toxic vapors
Org	=	organic salt reactivity	Leak	=	leak potential
Heat	=	high heat	Rad	=	radioactivity.
Crit	=	criticality			

Table B-7. Determination of Best Available Information for 241-B-361 Settling Tank. (10 Pages)

Reference	Information from Cited Reference	Supporting Comments on Reference Information	Evaluation of References
HW-28121 (Healy 1953)	4,275 g estimated Pu, 3,800 Ci estimated fission product were discharged to the settling tank.[A]	[A] A portion of which flowed on to the 216-B-5 reverse well.	No technical basis for estimated throughput is given. Data presented is for the total inventory discharged to 241-B-361 settling tank and is not representative of the inventory still remaining in the settling tank.
HW-33591 (Ruppert and Heid 1954)	P. 3 presents a summary of inventory up to July 1, 1954.[A] 361-B tank received a total of: 4,275 estimated Pu - g, 3,800 estimated fission prod – Ci.[B]	Quotes information given in HW-28121 [A] 241-B-361 was no longer in operation, therefore this should be a summary of the total inventory which passed through the tank. [B] A portion of which flowed on to the 216-B-5 reverse well.	No new information presented.
Letter from D. G. Harlow to J. A. Teal 07/31/74 (Harlow 1974)	It is estimated that 120e6 gal waste flowed through 241-B-361. The waste averaged 3.7E-5 g/gal Pu and 3.28E-5 Ci/gal beta.[A] Uses latest level data to calculate: 21,500 gal of liquid (13 ft 5.5 in.) and 7,050 gal of sludge (3 ft 7.75 in.).[B] Liquid is clear yellow with no solids and a pH-10.4. Liquid concentrations/inventories are as follows: Cs (11.92 µCi/gal = 0.26 Ci), Pu (1.87E-5 g/gal = 0.402 g).	[A] This would yield 4.4 kg Pu and 3,900 Ci beta. [B] Depths are both measured from the bottom of the tank, i.e., liquid level is 9.8 ft thick.	The average flow data was likely based on process flow sheets. These levels were taken prior to final pumping and stabilization. The majority of the supernate is assumed to have been pumped out, leaving only minor quantities, if any. Therefore, the supernate concentrations are not an issue.
Letter from J. S. Buckingham to R. L. Walser 04/05/76 (Buckingham 1976a)	Measurements of a sample of supernatant liquid from tank 361-B. pH 10.2 Pu239 0.91 µg/L Cs137 2.81 µCi/L Sr90 5.80 µCi/L		The majority of the supernate is assumed to have been pumped out, leaving only minor quantities, if any. Therefore, the supernate concentrations are not an issue.

Table B-7. Determination of Best Available Information for 241-B-361 Settling Tank. (10 Pages)

Reference	Information from Cited Reference	Supporting Comments on Reference Information	Evaluation of References
ARH-N-314 (Horton 1974), reported 11/11/76	Laboratory notebook of Horton with results of 10/15/76 sample – residue is black and has the consistency of thick pudding heat gen = 10^{-4} W/L. Concentration of sludge: Bulk Density 1.297 g/cc Particle Density 1.0107 g/cc %H2O 72.9 Al 0.06 moles/L Ba <0.04 moles/L Fe 0.3 moles/L NO3 4.2 moles/L Na 1.3 moles/L Cd <0.003 moles/L Ni 0.3 moles/L Mg 0.03 moles/L Mn 0.4 moles/L Si 0.4 moles/L SO4 <0.4 moles/L PO4 <1.3 moles/L Pu <7.81E-4 g/L 89+90Sr 2.95E4 µCi/L 137Cs 1.858E3 µCi/L 125Sb 1.17E3 µCi/L 144Ce 4.63E2 µCi/L 155Eu 4.51E2 µCi/L 60Co 1.55E2 µCi/L		Sludge concentration values appear reasonable, concentration of Pu would probably be fairly low due to short duration within tank full settling would not occur.

Table B-7. Determination of Best Available Information for 241-B-361 Settling Tank. (10 Pages)

Reference	Information from Cited Reference	Supporting Comments on Reference Information	Evaluation of References
MEM-111676 (Horton 1976a)	Letter summarizing results of 10/15/76 sample.[A] Presents the same results, slightly differently (i.e., chemical are listed as compounds, and some rounding is shown). Residue is black and has the consistency of thick pudding heat gen = 10^{-4} W/L. Concen of sludge: Bulk Density 1.30 g/cc Particle Density 1.01 g/cc %H2O 72.9 Al2O3 0.06 moles/L Ba 0.04 moles/L FeOOH 0.3 moles/L NaNO3 4.2 moles/L Na 1.3 moles/L Ni 0.3 moles/L Mg 0.03 moles/L Mn 0.4 moles/L SiO2 0.4 moles/L Na2SO4 <0.4 moles/L Na3PO4 <1.3 moles/L Pu <7.81E-4 g/L 89+90Sr 2.95E4 µCi/L 137Cs 1.86E3 µCi/L 125Sb 1.17E3 µCi/L 144Ce 4.63E2 µCi/L 155Eu 4.51E2 µCi/L 60Co 1.55E2 µCi/L	[A] Results are formulated in ARH-N-314.	No new information presented.

Table B-7. Determination of Best Available Information for 241-B-361 Settling Tank. (10 Pages)

Reference	Information from Cited Reference	Supporting Comments on Reference Information	Evaluation of References
Letter from J. E. Horton to J. E. Mirabella 07/23/79 (Horton 1979)	4/30/79 sample – residue is black and has the consistency of pudding heat gen = 10^{-7} W/L. Supernatant and solids info given separately. Supernatant Bi+3 <8.05E-5 M[A] 137Cs+ 1.91 µCi/L Fe+3 0.0002 M F- 0.010 M La+3 0.0003 M Mg+2 <9.0E-5 M Mn+2 <2.0E-5 M NaAlO2 <4.05E-4 M Na2CO3 0.190 M NaNO2 0.030 M NaNO3 1.07 M NaOH 0.24 M Na3PO4 0.01 M Na2SO4 0.04 M Ni+2 <5.2E-5 M 239Pu 9.92E-6 g/L SiO4 0.002 M 89+90Sr 3.09E-2 µCi/L U+6 8.38E-3 g/L Density 1.06 g/cc Water 90.0 %[B]	[A] Bad copy, cannot read, " – 5" is inserted from RHO-ST-37 (Smith 1980). [B] Bad copy; in 90 to 100% range.	The concentration of Pu sludge is suspect. The concentration given would have greatly exceeded the tank farm discharge specifications. Furthermore, the Pu/U ratios are questionable. The ratio is the opposite of what would be expected from the process waste stream.

Table B-7. Determination of Best Available Information for 241-B-361 Settling Tank. (10 Pages)

Reference	Information from Cited Reference	Supporting Comments on Reference Information	Evaluation of References
Letter from J. E. Horton to J. E. Mirabella 07/23/79 (Horton 1979)	Solids: Component — Weight Percent Al+3 — <0.06 Bi+2 — 10.3 137Cs+ — None detected F- — 0.04 Fe+3 — 1.3 H+ — 6.1 M (HCL) La+3 — 3.2 Mg+2 — 0.5 Mn+2 — 3.0 Ni+2 — 0.04 NO3- — 2.0 PO4-3 — 3.4 239Pu — 8.50E-5 g/g SiO4 — 0.4 SO4-2 — 0.2 89+90Sr — 9.52E-2 Ci/g U+6 — 1.1E-5g/g Bulk Density — 1.29 g/cc Material Balance — 96.0 % Particle Density — 3.93 g/cc Water — 72.0 %		
RHO-CD-673 (Maxfield 1979)	Rad Content of the 216-B-5 reverse well calculated from discharge data.[A] Pu 4.3E3 g (decayed 6/30/78 =4280) Beta 3.8E3 Ci Sr 76 Ci Ru 160 Ci Cs 81 Ci	[A] Total discharged to 241-B-361, of which a portion went to the 216-B-5 reverse well.	Data presented is for the total inventory discharged to the 241-B-361 settling tank and is not representative of the inventory still remaining in the settling tank.

Table B-7. Determination of Best Available Information for 241-B-361 Settling Tank. (10 Pages)

Reference	Information from Cited Reference	Supporting Comments on Reference Information	Evaluation of References
RHO-ST-37 (Smith 1980)	Concentration given (theoretically based on the Horton [1979] sample):[A] Study of 216-B-5 reverse well, suggests concentrations are same as those found within 241-B-361, as given: Analysis of Sludge: Component / Solids, wt% / Liquids Al+3 / <0.06 / - Bi+2 / 10.3 / 8.05E-5 M Fe+3 / 1.3 / 0.0002 M H+ / / F- / 0.04 / 0.010 M La+3 / 3.2 / 0.0003 M Mg+2 / 0.5 / <9.0E-5 M Mn+2 / 3.0 / <2.0E-5 M NaAlO2 / 0.04 / <4.05E-4 M Na2CO3 / - / 0.190 M NaNO2 / - / 0.030 M NaNO3 / - / 1.07 M NaOH / - / 0.24 M Na3PO4 / - / 0.01 M Na2SO4 / - / 0.04 M Ni+2 / - / <5.2E-5 M NO3- / 2.0 / - PO4-3 / 3.4 / - SiO4 / 0.4 / 0.002 M SO4-2 / 0.2 / - 239Pu / 3.4 µCi/g / 6.1E-7 µCi/ml 137Cs+ / 1.4 µCi/g / 2.5E-3 µCi/ml 89+90Sr / 23 µCi/g / 3.1E-5 µCi/ml 238U / 1.1E-5 g/g / 8.4E-6 g/ml Bulk Density / 1.29 g/cc Particle Density / 3.93 g/cc Moisture Content / ~72.0 wt% Volume / 1.20E+5 l ~2.4 kg of Pu remains (~ ½ discharge Pu was retained in the settling tank and the rest went to the 216-B-5 reverse well). In situ analysis agrees well yielding 1.6 kg of Pu remaining. Ground monitoring indicates no leakage located.	[A] All underlined data represents values which differ from the Horton (1979) sample (the solid concentration of Pu and Cs appear to be based on MEM-111676).	The concentrations given here appear credible for the waste received by the 241-B-361 tank (i.e., ratios of Pu/U and Cs/Sr appear correct). The sludge analysis was done in approximately the same time frame as Horton (1979). The correction of the Pu, Cs, and Sr concentrations is not explained in the document. ***CONCLUSION: Will use all concentrations here in calculating the total inventory.***

Table B-7. Determination of Best Available Information for 241-B-361 Settling Tank. (10 Pages)

Reference	Information from Cited Reference	Supporting Comments on Reference Information	Evaluation of References
SD-DD-FL-001 (RHO 1982)	• Volume of sludge = 1.2E5 l, 2.4 kg Pu (RHO-ST-37). No pumpable liquid remaining in tank.		Reasonable to assume little to no pumpable liquid remains in the tank.
RHO-RE-ST-30 P (RHO 1985)	241-B-361.total discharge Pu (g) = 2,600.[A]	[A] Assumed to be discharged to soil from 216-B-5 reverse well.	Doesn't present any information regarding 241-B-361 contents.
WHC-SD-DD-TI-057 (Rymarz and Speer 1991)	• 120E6 gal passed through 241-B-361 containing 4.3 kg Pu, approximately half (2.4 kg Pu) was left in 241-B-361 (RHO-ST-37). States that 2E6 Ci Sr is in tank. States that the most recent sampling was from 4/30/79 (Horton 1979); • 32,000 gal sludge (RHO-ST-37, RHO-WM-PL-10 [RHO 1984],[A] and *Hanford Site Waste Management Units Report* [WHC 1987]) • 9.46 ft waste level yields volume of 22,000 gal (Data Sheet from T0-020-597, RHO June 4, 1985)[B] • No pumpable liquid remains (RHO-ST-37 and *Hanford Site Waste Management Units Report* [WHC 1987[C]]). Quotes concentrations given in RHO-ST-37.	[A] Not able to verify. [B] Not able to verify. [C] Not able to verify.	Much of data is not new. Detail regarding 2E6 Ci Sr in tank is discounted. Level volume of 22,000 gal is obtained from a data sheet and is likely to be more accurate than many other sludge levels.
WHC-EP-0182-42 (Hanlon 1991)	Unknown volume, interim stabilized 1985 (*Waste Storage Tank Status and Leak Detection Criteria* [Welty 1988]).[A]	[A] Not able to verify.	No new information is presented.

Table B-7. Determination of Best Available Information for 241-B-361 Settling Tank. (10 Pages)

Reference	Information from Cited Reference	Supporting Comments on Reference Information	Evaluation of References
WHC-SD-EN-ES-040 (Freeman-Pollard 1994)	The sludge moisture content was ~70 wt% in 1980.[A] • 2.46 kg Pu, 2E6 Ci Sr-89/90, and 125 Ci Ce (WHC-SD-DD-TI-057). (States that the given concentration in WHC-SD-DD-TI-057[B] [23 µCi/g] yields 2,500 Ci Sr, so 2E6 Ci Sr believed to be in error.) • 1,060 Ci beta/gamma (WIDS) • DOE/RL-92-05 reports 32,000 gal of sludge with 5.42 lb Pu • 20,678 gal sludge and 0 gal liquid [Stabilization Evaluation Form (6/26/85)[C]]. Figure 2-21 shows 241-B-361 and states, 0 gal liquid, 22,000 gal solids. Quotes concentrations given in RHO-ST-37 (not repeated here). Isolated in the early 1980s and stabilized in 1985. Table 6-1 presents risks (L, M, H): H2 = M FeCN = L Org = M Flam = L Vap = M Integ = L Rad = H Crit = M No pumpable liquid.	[A] Probably based on RHO-ST-37. [B] Which is=RHO-ST-37 (Horton 1979). [C] Not able to verify.	Much of data is not new. Volume of 20,678 gal sludge said to be presented in the stabilization evaluation form is believed to be the best volume information available. ***CONCLUSION: Will use a volume of 20,678 gal sludge and 0 gal supernate as final volumes.***
WHC-EP-0775 (Wang and Powers 1994)	Table B-1 states normal capacity = 36,000 gal, solids volume = 20,678 gal, supernate volume = 0 gal. Gives the following rankings: H2 = H FeCN = L Org = M* Heat = L Crit = L Flam = H Vap = H Leak = M Rad = M No pumpable liquids.	Information very likely quoted from WHC-SD-EN-ES-040.	No new information presented.
WHC-EP-0861 (Powers 1995)	Table A-1 states normal capacity = 36,000 gal, solids volume = 20,678 gal, supernate volume = 0 gal.	Information very likely quoted from WHC-SD-EN-ES-040.	No new information presented.
BHI-00179 (DeFord and Carpenter 1995a)	• An estimated 32,000 gal of sludge, primarily bismuth phosphate, with about 2.46 kg of Pu is contained in the tank (SD-DD-FL-001).		No new information presented.

Table B-7. Determination of Best Available Information for 241-B-361 Settling Tank. (10 Pages)

Reference	Information from Cited Reference	Supporting Comments on Reference Information	Evaluation of References
DOE/RL-95-59 (DOE-RL 1995)	• Approximately 3.10E7 l of liquid was discharged to 241-B-361 from 224-B and 221-B, containing an estimated 4.28E3 g of Pu and 3.8E3 Ci mostly short lived beta-gamma activity (HW-17088 [Brown and Ruppert 1950]). • 216-B-5 reverse well - the waste stream contained an estimated 76 Ci Sr90, 106 Ci Ru106, and 81 Ci of Cs137 (RHO-CD-673). The waste discharged to the 241-B-361 settling tank and 216-B-5 reverse well was a low-salt, alkaline waste containing 1.4E-4 g/L Pu, 2.6E-i/L Cs, 5.3E-6 Ci/L Ru, 2.5E-6 Ci/L Sr, 1.2E-5 Ci/L beta – analysis gives major constituent as BiPO4 Table 5-2 states that the 216-B-5 reverse well contains 2.55E1 Ci Sr90, 2.92E1 Ci Cs137, 4.27E3 g Pu, 2.44E2 Ci Pu-239, 6.57E1 Ci Pu240, 1.03E-11 Ci Ru106, 2.62E2 Ci Alpha, 1.08E2 Ci beta (all decayed to 12/31/89 except for underlined which were decayed to 4/1/86). Table 5-3 states that the 216-B-5 reverse well contains 5E3 kg AlNO3,[A] 5E4 kg F, 8E4 kg K, 4E5 kg NO3, 1.2E4 kg Oxalate, 2.9E4 kg PO4, 3.3E3 kg SO4 (derived from WIDS 1991[B] and PNL-6456[C]).	[A] PNL-6456 gives as ammonium nitrate. [B] Not able to verify. [C] PNL-6456 also gives 3.5E5 kg Na.	Most of data is not new. New data is not representative of what is contained with 241-B-361 settling tank.
BHI-00464 (Chiaramonte 1996)	• Approximately ½ of the 4.27 kg (9.41 lb) Pu discharged passed through the tank and entered the 216-B-5 reverse well (RHO-ST-37). Discusses a discrepancy that is said to exist between the Sr and Cs reported for the sludge and that discharged (30 and two times respectively) (DOE/RL-95-59). Quotes the concentrations for discharge given in DOE/RL-95-59.		No new information is presented.
WIDS 1999[A]	Unit now estimated to contain 22,000 gal sludge (2.46 kg Pu, 1,060 Ci beta/gamma).	[A] Waste Information Data System, owned and operated by BHI.	No new information is presented.

Table B-7. Determination of Best Available Information for 241-B-361 Settling Tank. (10 Pages)

Reference	Information from Cited Reference	Supporting Comments on Reference Information	Evaluation of References
Conclusion	Chemical concentrations: RHO-ST-37 Radiological concentrations: RHO-ST-37 Volume of Sludge: WHC-EN-ES-ED-040^ Volume of Supernatant: WHC-EN-ES-ED-040	^ 20,678 gal.	Estimated Total Inventory: Sludge Volume = 20,678 gal Supernate Volume = 0 gal Bulk Density (1.29 g/cc) Total Volume = 1.0E+08 g Est. Total Concentration* / Inventory Al+3 <0.06% <6.1E+4 g Bi+2 10.3% 1.0E+7 g Fe+3 1.3% 1.3E+6 g F- 0.04% 4.0E+4 g La+3 3.2% 3.2E+6 g Mg+2 0.5% 5.0E+5 g Mn+2 3.0% 3.0E+6 g NaAlO2 0.04% 4.0E+4 g NO3- 2.0% 2.0E+6 g PO4-3 3.4% 3.4E+6 g SiO4 0.4% 4.0E+5 g SO4-2 0.2% 2.0E+5 g 239Pu 3.4 µCi/g 3.4E+2 Ci 137Cs+ 1.4 µCi/g 1.4E+2 Ci 89+90Sr 23 µCi/g 2.3E+3 Ci 238U 1.1E-5 g/g 1.1E+3 g * Radiological inventory is original data – no decay.

Table B-8. Evaluation of Best Available Information to Determine Relative Risk Rankings for IMUST Tank 241-B-361. (2 Pages)

Tank Number	Tank Type	Relative Ranking on Potential Safety Issues[a,b]									Sludge Volume (gal)	Liquid Volume (gal)	Total Volume (gal)	Notes
		H_2	FeCN	Org	Heat	Crit	Flam	Vap	Leak	Rad				
241-B-361	Settling	None Note 1	N/A Note 2	N/A Note 3	L Note 4	L Note 5	None Note 6	L Note 7	L Note 8	L Note 9	20,678 Note 10	0 Note 11	20,678	*Inventory of tank based on RHO-ST-37 (see Note 12).*

The following evaluation/qualitative risk ranking notes were based on a multidisciplinary peer review of the historical process chemicals, available sample data and other documents (cited in Table B-7) as described in Section A.2. The review was conducted to identify the best available information and to determine if there were any potential chemical vulnerability or other safety issues associated with the ERC IMUST tanks. The review was specifically directed toward identifying existing conditions that would have any severe consequences or conditions that could become more hazardous over time (e.g., through evaporation, chemical decomposition, or introduction of water).

NOTES:

Note 1: Hydrogen. Although liquids may still remain in the tank, the hydrogen generation rates (from either radiolytic decomposition of water or chemicals or chemical reactions not induced by radiation) are expected to be low (i.e., the Cs, Pu, and Sr concentrations are fairly low). Further, the 241-B-361 tank is not hermetically sealed (eleven risers extend above grade) and any hydrogen generated would be expected to diffuse through the porous concrete walls or unsealed openings. In addition, the tank is underground, isolated (as described in Section 3.0), constructed of unlined concrete, and contains no ignition sources. Accordingly, a qualitative risk ranking of NONE was assigned for hydrogen generation and buildup.

Note 2: Ferrocyanide. The 241-B-361 tank was not in the ferrocyanide process flow path (did not receive waste that contained ferrocyanide). Accordingly, ferrocyanide reactivity is not a safety issue for this tank. The risk ranking is N/A.

Note 3: Organic Salt. Organic salt reactions require the presence of organic salts and high temperatures. There is no known heat source (either external or from internal chemical reactions) that could cause organic salt reactions. Also, there were no organics used during the service life of this tank. Accordingly, organic salt reactivity is not a safety issue for this tank. The risk ranking is N/A.

Note 4: Heat. A sludge sample taken in 1976 demonstrated a heat generation rate of 10^{-4} W/L (MEM-111676), a later sludge sample taken in 1979 demonstrated a drop in heat generation to 10^{-7} W/L (Horton 1979). In the past twenty years it is likely that the heat generation has continued to drop, due to decay. Actual or potential sources of heat (radioactive decay or chemical reactions) are insignificant and would not result in consequential changes in the tank status. Therefore, the risk ranking for high heat is LOW.

Note 5: Criticality. The amount of fissionable materials contained in the settling tank exceeds the subcritical mass limits for an optimum plutonium system. However, the fissionable materials are known (based on tank farms work summarized in WHC-SD-WM-TI-725 [Bratzel et al. 1996]) to adhere to other molecules and tend to be fairly uniformly dispersed through the waste matrix, and the concentration is substantially less than the minimum critical concentration in soil or waste (i.e., the sample results of 3.4 mCi/g of waste are significantly less than the minimum critical concentration of 27 mCi/g in an optimum SiO2 system). Since SiO2 is considered a more optimal moderation medium than a typical waste matrix, and in the current S&M state there is no concentration mechanism that could lead to criticality, the risk ranking for criticality is judged to be LOW.

Note 6: Flammability. As noted above, although there may be some potential for generation of small amounts of hydrogen, there is no credible potential for hydrogen accumulation or ignition of flammable materials. Also, there were no organics used during the service life of this tank. As the conditions required for a reaction are not all met, the risk ranking for flammability is NONE.

Note 7: Vapor Emissions. The sample results do not identify the presence of volatile inorganic materials, nor the potential interactions that would produce noxious vapors. As noted above, some hydrogen may be generated and diffused from the tanks through unsealed openings and the effects of atmospheric pumping. The tank is located outside with no direct paths to vent the tank, any consequences would be minimal. Therefore, the vapor emissions resulting from this are judged to be of LOW risk ranking.

Note 8: Leak Potential. As stated in Note 11, although documents state no pumpable liquids remain in the tank, some small amount of liquids may remain. The potential for degradation of a reinforced concrete tank is likely. However, the remaining sludge is not highly mobile and the quantity is much less than that which was discharged to the corresponding solid column units. Since the tank liquids were routinely discharged to the soil column (via the reverse well), the impacts of this small additional amount of tank leakage to the environment is not judged to be significant. The risk ranking for tank leak potential is judged to be LOW.

Table B-8. Evaluation of Best Available Information to Determine Relative Risk Rankings for IMUST Tank 241-B-361. (2 Pages)

Tank Number	Tank Type	Relative Ranking on Potential Safety Issues[a,b]									Sludge Volume (gal)	Liquid Volume (gal)	Total Volume (gal)	Notes
		H_2	FeCN	Org	Heat	Crit	Flam	Vap	Leak	Rad				

Note 9: Radiation. The tank is known to contain radiological material. However, the tank is below grade and shielded by several feet of soil. In the S&M state, the tank poses little to no radiation exposure to workers. The risk ranking for radiation is judged to be LOW.

Note 10: Sludge Volume. The sludge volume reported in WHC-SD-EN-ES-040 was cited from a Stabilization Evaluation Form. Although this form could not be located in archive files when BHI performed the records search for the preparation of this document, this information is believed to be the most accurate sludge volume for the tank.

Note 11: Liquid Volume. WHC-SD-EN-ES-040 cites the stabilization evaluation form for 241-B-361, stating that no supernatant remains in the tank. Although this form could not be located in archive files when BHI performed the records search for the preparation of this document, this information is believed to be the most accurate liquid volume for the tank. Reported samples from 1974 through 1979 all indicated the presence of liquids in the tank, and there was no documentation that these liquids were removed, otherwise stabilized, or the tank had leaked. Therefore, some amount of liquid may remain in the tank.

Note 12: The sample data reported in RHO-ST-37 for both radiological and chemical constituents is believed to be the most accurate inventory concentration information for the tank. The RHO-ST-37 concentration data cited for Pu 239, Cs 137, and Sr 89/90 appears to correct the earlier Horton 1979 data which cited concentrations in units of g/g. The Horton (1979) data was judged to be suspect as the g/g concentrations would have: 1) greatly exceeded the tank farms waste discharge specifications at the time, and, 2) the Plutonium to Uranium ratio (of approximately 8:1) were opposite of what would be expected. (i.e., there should be much less Pu than U). Both the RHO-ST-37 concentration data units (mCi/g for Pu, Cs, and Sr and g/g of U) and the Pu/U and Cs/Sr ratios are appropriate for the associated waste streams. Therefore, this source was used in establishing a representative inventory.

UNCERTAINTY. The concentrations of RHO-ST-37 are likely on the high end (as they are greater than the total throughput of 241-B-361 given in HW-28121 and greater than the in situ analysis postulated inventory given in RHO-ST-37). Risk ranking decisions were based on both the potential and the consequences, using process knowledge, as detailed in Sections A.2 and A.3. The postulated concentrations did not play an important role in these determinations.

BHI RECOMMENDATION. Based on the above evaluations, BHI believes the tank does not represent either an imminent or foreseeable safety concern. BHI staff concluded that continued S&M of the tank under the RARA program represents no significant risks to the worker, public, or environment. Due to uncertainties within the estimated data, sampling/detailed characterization should be considered to provide a decisional basis for remediation or ultimate disposition of the tank.

[a] Relative rankings: H = high; M = moderate; and L = low.
[b] Issue abbreviations:

H_2	=	hydrogen generation and buildup	Flam	=	flammability
FeCN	=	ferrocyanide reactivity	Vap	=	emission of radioactive or toxic vapors
Org	=	organic salt reactivity	Leak	=	leak potential
Heat	=	high heat	Rad	=	radioactivity.
Crit	=	criticality			

Table B-9. Determination of Best Available Information for 241-U-361 Settling Tank. (5 Pages)

Reference	Information from Cited Reference	Supporting Comments on Reference Information	Evaluation of References
Letter from D. G. Harlow to J. A. Teal 07/31/74 (Harlow 1974)	It is estimated that 60E6 gal waste flowed through 241-U-361. The waste averaged 7.08E-7 g/gal Pu, 6.71E-2 g/gal U, 2.02E-5 Ci/gal beta. [A, B] The latest data indicated a liquid level of 14 ft 6-1/2 in. = 6,000 gal liquid and a sludge level of 11 ft 8-1/2 in. = 25,000 gal sludge. [C] Concen liquid: 37.17µCi/gal Cs =.22 Ci , <1.78E-6 g/gal Pu (<.011 g).	[A] This would equal 42.5 g Pu, 4,026 kg U, and 1,212 Ci beta a portion of which flowed to 216-U-1 and 216-U-2 Cribs. [B] (Notes hand written on page state that the liquid is clear yellow with a pH=4, the notes also state that 50 gal NaOH was added to adjust the pH to 12.5). [C] Depths are both measured from the bottom of the tank, i.e., liquid level is 2.8 ft thick.	The average flow data was likely based on process flow sheets. These levels were taken prior to final pumping and stabilization. The majority of the supernate is assumed to have been pumped out, leaving only minor quantities if any. Therefore, the supernate concentrations are not an issue. ***CONCLUSION: Will use estimated total U discharged (total flow * average flow concentration) as conservative bound for inventory of U.***
ARH-N-314 (Horton 1974)	Laboratory notebook with results of 4/28/76 sample notes/results. Notebook provides multiple stage sampling data, the sludge sample totals are calculated only for the following: Concen of sludge:[A] Bulk Density 1.4907 g/cc Particle Density 5.969 g/cc %H2O 65.6 Pu 9.97E-7 µCi/g 89+90Sr 4.85 µCi/g U 0.133 µCi/g Cs137 8.8 µCi/g Supernate results: Density 1.0255 g/cc % H2O 95.6 Al <0.004% NO2 <0.003% NO3 0.5% OH pH=7.5 0 CO2 <0.007% U 3.55E-2 g/L Fe <8.11E-5 M 0 Pu <1.17E-6 g/L 89+90Sr 1.67E2 µCi/L 137Cs 1.12 µCi/L	[A] Pu and U concentrations have been erroneously given in terms of µCi/g, should be given as g/g (previously said g/g, has been erased).	Concentration of U is not reasonable, and greatly exceeds the quantity of U said to be discharged to 241-U-361 in Harlow (1974). The majority of the supernate is assumed to have been pumped out, leaving only minor quantities if any. Therefore, the supernate concentrations are not an issue.

Table B-9. Determination of Best Available Information for 241-U-361 Settling Tank. (5 Pages)

Reference	Information from Cited Reference	Supporting Comments on Reference Information	Evaluation of References
Letter from J. S. Buckingham to R. L. Walser 03/16/76 (Buckingham 1976b)	Measurements of a sample of supernatant liquid from tank 361-U. pH 4 Pu239 1.17 µg/L Cs137 11.1 µCi/L Sr90 573 µCi/L	Low pH, acidic environment would explain high Sr concentration.	The majority of the supernate is assumed to have been pumped out, leaving only minor quantities if any. Therefore, the supernate concentrations are not an issue.
MEM-111776 (Horton 1976b)	Letter summarizing results of 4/28/76 sample.[A] Presents totaled results for all sludge components. Sludge is brownish yellow and has the consistency of soft mud. Concen of sludge:[B] Bulk Density 1.49 g/cc[C] Particle Density 5.97 g/cc[C] %H2O 65.6 Al2O3 2.4% Na2CO3 <1.0% FeOOH 2.9% NaNO2 <1.0% NaNO3 27.2% Mg 0.06% Mn 0.6% Na2SO4 1.3% Na3PO4 <1.0% Ni 0.5% SiO2 0.3% Na 4.4% U 0.133 µCi/g Pu 9.97E-7 µCi/g 89+90Sr 4.9 µCi/g 137Cs 8.8 µCi/g	[A] Results are formulated in ARH-N-314. [B] Pu and U concentrations have been erroneously given in terms of µCi/g, should be given as g/g (previously said g/g, has been erased). [C] Densities have been rounded.	More fully presents the sludge concentrations developed in ARH-N-314. Concentration of U is not reasonable, and greatly exceeds the quantity of U said to be discharged to 241-U-361 in Harlow (1974). ***CONCLUSIONS: Will use all concentrations presented here (with the exception of the U concentration) in calculating the total inventory.***
SD-DD-FL-001 (RHO 1982)	Radiological inventory = 60 Ci beta.		No technical basis is provided for inventory.
RHO-CD-213 (Stalos and Walker 1987)	5/7/77 - nitrate solution added 1/28/85 pumped 4/29/85 pumped 7/18/85 interim stabilized at 142.25 in. liquid level.[A]	[A] Depth measurement equates to 25,000 gal.	Appears to be good level data, however, does not discriminate between the volume of sludge and liquid.

Table B-9. Determination of Best Available Information for 241-U-361 Settling Tank. (5 Pages)

Reference	Information from Cited Reference	Supporting Comments on Reference Information	Evaluation of References
WHC-SD-DD-TI-057 (Rymarz and Speer 1991)	MEM-111776 sample data = 69,000 kg U[A], 760 Ci Sr, 1,365 Ci Cs, and <1 g Pu (26,150 gal). 60E6 gal (7.08E-7 g/gal Pu, 6.71E-2 g/gal U...42.5 g Pu, 4,026 kg U). • RHO-WM-PL-10[B] 27,500 gal waste. • Data Sheet from T0-020-597, RHO July 17, 1985,[C] states that a pumping decreased the liquid content in the tank by approximately 1350 gal liquid. The pumping decreased the waste level to 11.8 ft, with little or no liquid reported remaining.	[A] Appears to be an error: (9.9E7 cm^3 * 1.49 g/cm^3 * 0.133 µCi/g = 2.0E7 µCi = 6.5E-6 g or 9.9E7 cm^3 * 1.49 g/cm^3 * 0.133 g/g = 2E7 g = 20,000 kg). [B] Not able to verify. [C] Not able to verify.	Appears to be good level data.
WHC-EP-0182-42 (Hanlon 1991)	Unknown volume, interim stabilized, manual tape removed 1985 (*Waste Storage Tank Status and Leak Detection Criteria* document).		No new information is presented.
WHC-SD-DD-TI-063 (Smith 1992)	1.75E8 gal effluent 8,900 lb U, 43 g Pu discharged to 241-U-361, a portion of which flowed to 216-U-1 and 216-U-2 Cribs.[A] 27,500 gal sludge remains.	[A] Claims to be referenced from DOE 1991, however there is no DOE 1991 in reference list.	Cannot determine source based on presented information. No new information is presented.
DOE/RL-92-16 (DOE-RL 1993)	Years in Service = 1951-1967 Received radioactive liquid, plutonium sludge Total fluid volume received = 104 m^3 [A] (states this represents the current volume of tank).	[A] 27,500 gal.	No technical basis is provided for volume.
WHC-SD-EN-ES-040 (Freeman-Pollard 1994)	• 42.5 g Pu, 4026 kg U • 1 g Pu, 69,000 kg U. Sludge total weight (SG=1.49) = 325,000 lb...if U 69,000 kg – U would be 47% (not realistic since sludge reported to contain 65.6% water, 27.2% sodium nitrate, and 10% other salts)...it is therefore expected that the U content is <6,900 kg and close to the 4,000 kg average flow estimate of WHC-SD-DD-TI-057. Figure 2-22 shows 98 gal liquid and 27,734 gal solids. • 27,734 gal sludge (141.5 in.), 98 gal supernate (0.5 in.) (Stabilization Evaluation Form[A]) • 27,500 gal sludge (DOE/RL-95-13 [DOE-RL 1995][B]). Quotes concentrations based on MEM-111776 sample data. Table 6-1 presents rankings: H2 = M FeCN = L Org = M Flam = L Vap = M Integ = L Rad = H Crit = L Little or no liquid.	[A] Not able to verify. [B] Not able to verify.	Volume of 27,734 gal sludge and 98 gal supernate said to be presented in the stabilization evaluation form is in good agreement with WHC-SD-DD-TI-057, and is believed to be the best available volume information available. ***CONCLUSION: Will use a volume of 27,734 gal sludge and 98 gal supernate as final volumes.***

Table B-9. Determination of Best Available Information for 241-U-361 Settling Tank. (5 Pages)

Reference	Information from Cited Reference	Supporting Comments on Reference Information	Evaluation of References
WHC-EP-0775 (Wang and Powers 1994)	Estimated to contain about 1,400 Ci Cs. Table B-1 states normal capacity = 36,000 gal, solids volume = 27,734 gal, supernate volume = 98 gal. Table A-6 states semi-volatile organics (kerosene, TBP) and volatile organics indicated. Gives the following rankings: H2 = H FeCN = L Org = M* Heat = L Crit = L Flam = H Vap = H Leak = M Rad = H States little or no liquid.		No basis given for 1,400 Ci Cs, it appears to be based on the Cs concentration given in ARH-N-314. Therefore, there is no new information presented.
WHC-EP-0861 (Powers 1995)	Estimated to contain about 1,400 Ci Cs.[A] Table A-1 states normal capacity = 36,000 gal, solids volume = 27,734 gal, supernate volume = 98 gal.[A]	[A] Information very likely quoted from WHC-EP-0775.	No new information is presented.
WIDS 1999[A]	27,500 gal sludge/ with unknown Pu content.	[A] Waste Information Data System, owned and operated by BHI.	No new information is presented.

Table B-9. Determination of Best Available Information for 241-U-361 Settling Tank. (5 Pages)

Reference	Information from Cited Reference	Supporting Comments on Reference Information	Evaluation of References
Conclusion	Chemical concentrations: MEM-111776 Radiological concentrations: MEM-111776 [A] + Harlow 1974 [B] Volume of Sludge: WHC-SD-EN-ES-040 Volume of Supernatant: WHC-SD-EN-ES-040	[A] Excluding the concentration given for U. [B] The total discharged U (average flow x total flow, given in Harlow [1974]) is included.	Total Inventory Sludge Volume = 27,734 gal Supernate Volume = 98 gal* Bulk Density (1.49 g/cc) Total Volume = 1.6E+08 g Concentration** / Est. Total Inventory Al2O3 2.4% 3.8E+6 g Na2CO3 <1.0% <1.6E+6 g FeOOH 2.9% 4.5E+6 g NaNO2 <1.0% <1.6E+6 g NaNO3 27.2% 4.3E+7 g Mg 0.06% 9.4E+4 g Mn 0.6% 9.4E+5 g Na2SO4 1.3% 2.0E+6 g Na3PO4 <1.0% <1.6E+6 g Ni 0.5% 7.8E+5 g SiO2 0.3% 4.7E+5 g Na 4.4% 6.9E+6 g Pu 9.97E-7 g/g 1.6E+2 g 89+90Sr 4.9 µCi/g 7.7E+2 Ci 137Cs 8.8 µCi/g 1.4E+3 Ci Total Flow / Ave. Flow Conc. / Est. Total Inventory U 60E+6 gal x 6.71E-2 g/gal <4.0E+6 g * Not included in total inventory, contribution minor. **Radiological inventory is original data – no decay

Table B-10. Evaluation of Best Available Information to Determine Relative Risk Rankings for IMUST Tank 241-U-361. (2 Pages)

Tank Number	Tank Type	Relative Ranking on Potential Safety Issues[a,b]									Sludge Volume (gal)	Liquid Volume (gal)	Total Volume (gal)	Notes
		H_2	FeCN	Org	Heat	Crit	Flam	Vap	Leak	Rad				
241-U-361	Settling	None Note 1	N/A Note 2	None Note 3	L Note 4	None Note 5	None Note 6	L Note 7	L Note 8	L Note 9	27,734 Note 10	98 Note 11	27,734	*Inventory of tank based on MEM-111776 and Harlow (1974) (see Note 12).*

The following evaluation/qualitative risk ranking notes were based on a multidisciplinary peer review of the historical process chemicals, available sample data and other documents (cited in Table B-9) as described in Section A.2. The review was conducted to identify the best available information and to determine if there were any potential chemical vulnerability or other safety issues associated with the ERC IMUST tanks. The review was specifically directed toward identifying existing conditions that would have any severe consequences or conditions that could become more hazardous over time (e.g., through evaporation, chemical decomposition, or introduction of water).

NOTES:

Note 1: Hydrogen. Although liquids may still remain in the tank, the hydrogen generation rates (from either radiolytic decomposition of water or chemicals or chemical reactions not induced by radiation) are expected to be low (i.e., the Cs, Sr, and Pu concentrations are fairly low). Further, the 241-U-361 tank is not hermetically sealed and any hydrogen generated would be expected to diffuse through the porous concrete walls or unsealed openings. In addition, the tank is underground, isolated (as described in Section 3.0), constructed of unlined concrete, and contains no ignition sources. Accordingly, a qualitative risk ranking of NONE was assigned for hydrogen generation and buildup.

Note 2: Ferrocyanide. The 241-U-361 tank was not in the ferrocyanide process flow path (did not receive waste that contained ferrocyanide). Accordingly, ferrocyanide reactivity is not a safety issue for this tank. The risk ranking is N/A.

Note 3: Organic Salt. Organic salt reactions require the presence of organic salts and high temperatures. There is no known heat source (either external or from internal chemical reactions) that could cause organic salt reactions. Although there may be trace amounts of organic materials remaining in the tank, the sample results do not identify any organic content in the tank. Also, the design of the tank (which would overflow to a crib) does not allow for the formation of a floating layer. As the conditions required to initiate a reaction are not all met, the risk ranking for an organic salt reaction is NONE.

Note 4: Heat. Decay of the original inventory (Cs and Sr) results in a very low potential for heat generation. Actual or potential sources of heat (radioactive decay or chemical reactions) are insignificant and would not result in consequential changes in the tank status. Therefore, the risk ranking is LOW.

Note 5: Criticality. The 241-U-361 tank primarily received depleted uranium, which is not a fissionable material. Sample data given in MEM-111776 shows little to no fissionable material is contained in 241-U-361. Accordingly, criticality is not a safety issue for this tank. The risk ranking is NONE.

Note 6: Flammability. As noted above, although there may be some potential for generation of small amounts of hydrogen, there is no credible potential for hydrogen accumulation or ignition of flammable materials. Also, the sample data shows there are no organic solvents present in the tank. As the conditions required for a reaction are not all met, the risk ranking for flammability is NONE.

Note 7: Vapor Emissions. The sample results do not identify the presence of volatile organic or inorganic materials, nor the potential interactions that would produce noxious vapors. As noted above, some hydrogen may be generated and diffused from the tanks through unsealed openings and the effects of atmospheric pumping. The tank is located outside with no direct paths to vent the tank, any consequences would be minimal. Therefore, the vapor emissions resulting from this are judged to be of LOW risk ranking.

Note 8: Leak Potential. As stated in Note 11, although documents state no pumpable liquids remain in the tank, some small amount of liquids may remain. The potential for degradation of a reinforced concrete tank is likely. However, the remaining sludge is not highly mobile and the quantity is much less than that which was discharged to the corresponding solid column units. Since the tank liquids were routinely discharged to the soil column (via the reverse well), the impacts of this small additional amount of tank leakage to the environment is not judged to be significant. The risk ranking for tank leak potential is judged to be LOW.

Note 9: Radiation. The tank is known to contain radiological material. However, the tank is below grade and shielded by several feet of soil. In the S&M state, the tank poses little to no radiation exposure to workers. The risk ranking for radiation is judged to be LOW.

Table B-10. Evaluation of Best Available Information to Determine Relative Risk Rankings for IMUST Tank 241-U-361. (2 Pages)

Tank Number	Tank Type	Relative Ranking on Potential Safety Issues[a,b]									Sludge Volume (gal)	Liquid Volume (gal)	Total Volume (gal)	Notes
		H_2	FeCN	Org	Heat	Crit	Flam	Vap	Leak	Rad				

Note 10: Sludge Volume. The sludge volume reported in WHC-SD-EN-ES-040 was cited from a Stabilization Evaluation Form. Although this form could not be located in archive files when BHI performed the records search for the preparation of this document, this information is believed to be the most accurate sludge volume for the tank.

Note 11: Liquid Volume. WHC-SD-EN-ES-040 cites the stabilization evaluation form for 241-U-361, stating that very little supernatant remains in the tank. Although this form could not be located in archive files when BHI performed the records search for the preparation of this document, this information is believed to be the most accurate liquid volume for the tank. However, some liquid may remain in the tank.

Note 12: The sample data reported in MEM-111776 for both radiological and chemical constituents is believed to be the most accurate inventory concentration information for the tank (with the exception of U). The cited U exceeds credible concentrations and total throughput of 241-U-361, as given in Harlow (1974) (by a factor of >4). The U concentration is approximately 3 orders of magnitude greater than would be anticipated. The Harlow (1974) value for U throughput (based on process flow sheets) is chosen as a reasonable upper inventory. Therefore, these two sources were used in establishing a representative inventory.

UNCERTAINTY. The concentrations of MEM-111776 and Harlow (1974) are likely on the high end (as the postulated inventory of Pu is greater than the total throughput of 241-U-361 given in Harlow [1974], the total discharged U [as given in Harlow (1974)] is included in the inventory – only a portion would remain). Risk ranking decisions were based on both the potential and the consequences, using process knowledge, as detailed in Sections A.2 and A.3. The postulated concentrations did not play an important role in these determinations.

BHI RECOMMENDATION. Based on the above evaluations, BHI believes the tank does not represent either an imminent or foreseeable safety concern. BHI staff concluded that continued S&M of the tank under the RARA program represents no significant risks to the worker, public, or environment. Due to uncertainties within the estimated data, sampling/detailed characterization should be considered to provide a decisional basis for remediation or ultimate disposition of the tank.

[a] Relative rankings: H = high; M = moderate; and L = low.
[b] Issue abbreviations:

H_2	=	hydrogen generation and buildup	Flam	=	flammability
FeCN	=	ferrocyanide reactivity	Vap	=	emission of radioactive or toxic vapors
Org	=	organic salt reactivity	Leak	=	leak potential
Heat	=	high heat	Rad	=	radioactivity.
Crit	=	criticality			

Table B-11. Determination of Best Available Information for 241-T-361 Settling Tank. (6 Pages)

Reference	Information from Cited Reference	Supporting Comments on Reference Information	Evaluation of Reference
HW-7775 (Rhoads 1947)	Sludge depth of 241-T-361 = 9 ft, 1 ¼ in.[A] Sludge is caked and quite hard.[B]	[A] Depth measurement equates to 19,300 gal of sludge. [B] The liquid level was not measured.	Appears to be good level data, does not present volume of supernate.
HW-28121 (Healy 1953)	361-T tank received: 3,350 g estimated Pu, 2,800 Ci estimated fission products[A]	[A] A portion of which flowed on to 216-T-6 Crib and 216-T-3 reverse well.	No technical basis for estimated throughput is given. Data presented is for the total inventory discharged to the 241-T-361 settling tank and is not representative of the inventory still remaining in the settling tank.
HW-33591 (Ruppert and Heid 1954)	P. 4 presents inventory up to July 1, 1954.[A] 361-T tank received: 3,350 g estimated Pu, 2,800 Ci estimated fission products.[B]	Uses same data as HW-28121. [A] 241-T-361 was no longer in operation, therefore this should be a summary of the total inventory which passed through the tank. [B] A portion of which flowed on to 216-T-6 Crib and 216-T-3 reverse well.	No new information is presented.
Letter from D. G. Harlow to J. A. Teal 07/31/74 (Harlow 1974)	It is estimated that 170E6 gal waste flowed through 241-T-361. The waste averaged 2.29E-6 g/gal Pu, 1.33E-4 g/gal U, and 1.06E-4 Ci/gal beta.[A] Latest data indicates a liquid level of 12 ft 7 in. (which yields 19,650 gal of liquid)[B] and a sludge level of 5 ft 2 ½ in. (which yields 11,050 gal of sludge).[C] The liquid is clear yellow with no solids and a pH=10.6. Liquid concentrations/inventories are as follows: Cs (3.71 µCi/gal = 0.058 Ci),[D] Pu (1.45E-4 g/gal = 2.27 g)[D]	[A] This would equal <390 g Pu, 22.6 kg U, and 18,000 Ci beta total discharges to the tank. [B] This value is in error. The level calculates to yield a volume of 15,690 gal. [C] Depths are both measured from the bottom of the tank, i.e., liquid level is 7.4 ft thick. [D] Back-calculating the cited inventory divided by the concentration would actually yield ~15,600 gal liquid.	The average flow data was likely based on process flow sheets. These levels were taken prior to final pumping and stabilization. The majority of the supernate is believed to have been pumped out, leaving only minor quantities, if any. Therefore, the supernate concentrations are not an issue ***CONCLUSION: Will use estimated total U discharged (total flow * average flow concentration) as conservative bound for inventory of U.*** ***Will use the concentration of Cs in the supernate to arrive at a realistic Cs inventory.***

Table B-11. Determination of Best Available Information for 241-T-361 Settling Tank. (6 Pages)

Reference	Information from Cited Reference	Supporting Comments on Reference Information	Evaluation of Reference
Letter from J. S. Buckingham to R. L. Walser 04/05/76 (Buckingham 1976a)	Measurements of a sample of supernatant liquid from tank 361-T pH 11.5 Pu239 0.22 µg/L Cs137 4.10 µCi/L Sr90 0.53 µCi/L		The majority of the supernate is believed to have been pumped out, leaving only minor quantities, if any. Therefore, the supernate concentrations are not an issue.
ARH-N-314 (Horton 1974), reported 11/05/76	Laboratory notebook with results of 10/23/76 sample notes/results.[A] Concentration of sludge:[B] Bulk Density 2.53 g/cc Particle Density 3.91 g/cc %H2O 61.3 Al <1.9%[C] Fe 1.96% Ca 1.04%[D] NO3 17.4% PO4 1.0% SO4 <0.6% Si 1.8% Mg 0.2% Mn 3.8%[C] Ni 5.8% Na 3.1% Pu 2.30E-5 g/g 89+90Sr 0.120 µCi/g 137Cs 67.6 µCi/g CO3 0.9% NO2 1.4% Ca 0.6%[C]	[A] Two pages of sample information (p. 116 and 117) do not appear to have been used in calculating the final conclusions which are given on p. 118. [B] Does not give supernate concentrations. [C] The data is sloppy and difficult to read, several numbers are given and corrected. [D] Two different values are given for Ca, it is not clear why.	The data is sloppy with several rework numbers presented alongside other numbers. The subsequent Horton letter (ARHC-021677 [Horton 1977a]) presenting final data will be used (as is clearly presented).

Table B-11. Determination of Best Available Information for 241-T-361 Settling Tank. (6 Pages)

Reference	Information from Cited Reference	Supporting Comments on Reference Information	Evaluation of Reference
ARHC-021677 (Horton 1977a)	Letter summarizing results of 10/23/76 sample.[A] Residue is black and has the consistency of soft axle grease. Heat gen = 10^{-4} W/L. Concentration of sludge: Bulk Density 2.53 g/cc Particle Density 3.91 g/cc %H2O 61.3 Al <1.0% Fe 2.0% CO3 0.9% Ca 0.6% NO2 1.4% NO3 17.4% SO4 <1.0% PO4 1.0% Ni 5.8% Si 1.8% Na 3.1% Mg 0.2% Mn 1.7% Pu 2.30E-5 g/g 89+90Sr 0.120 µCi/g 137Cs 67.6 µCi/g	[A] Laboratory data is found in ARH-N-314, there are minor inconsistencies with laboratory data.	Presents the sludge concentrations developed in ARH-N-314. The data is more clearly summarized here. ***CONCLUSION: Will use all concentrations presented here in calculating the total inventory with the exception of the Cs concentration, which is unrealistically high.*** ***It is noted that the concentration of U in the laboratory sample was not analyzed.***
Letter from J. E. Horton to D. C. Lini, 06/77 (Horton 1977b)	Quotes data given in ARHC-021677.		No new information is presented.
Letter from T. A. Lane to J. E. Mirabella 07/25/77 (Lane 1977)	Discusses the addition of diatomaceous earth to a sample taken from 241-T-361. The diatomaceous earth was mixed in until the material was a stiff solid paste. This process determined that the water content was 73.58%.[A]	[A] Slightly higher than the water content given in ARHC-021677.	Provides no information regarding actual inventory or volume.
RHO-RE-ST-30 P (RHO 1985)	241-T-361...total leaked Pu (g) = 2000.[A]	[A] Believed to be discharged to soil from reverse well/crib.	Doesn't present any information regarding the remaining 241-T-361 contents.
RHO-CD-213 (Stalos and Walker 1987)	7/18/77 transfer 7/12/85 pumped 7/16/85 interim stabilized, liquid level 129.25 in.[A]	[A] Depth measurement equates to 22,800 gal.	Appears to be good level data, however, does not discriminate between the volume of sludge and liquid.

Table B-11. Determination of Best Available Information for 241-T-361 Settling Tank. (6 Pages)

Reference	Information from Cited Reference	Supporting Comments on Reference Information	Evaluation of Reference
WHC-SD-DD-TI-057 (Rymarz and Speer 1991)	Reports indicating the type and amount of waste in the tank are incomplete and often contradict each other, as follows: • 15,500 Ci beta/gamma and 2 kg Pu (RHO-WM-PL-10[A] and *Hanford Site Waste Management Units Report* [WHC 1987]) • 170E6 gal waste (2.29E-6 g/gal Pu and 1.33E-4 g/gal U.yields <390 g Pu) (Harlow 1974). Quotes sludge sample concentrations given in ARHC-021677. These concentrations yield 2.6 kg Pu and 7,800 Ci Cs. In 1985 the tank was pumped to 10.04 ft (Data Sheet from T0-020-597, RHO July 11, 1985[C] and Data Sheet from T0-020-597, RHO July 15, 1985[D]). Pumping would have left 12,000 gal sludge, 11,000 gal liquid, uses ARHC-021677 concentrations for sludge and Harlow (1974) concentrations for liquid.	[A] Not able to verify. [B] Inventories were calculated based on a sludge volume of 12,000 gal. [C] Not able to verify. [D] Not able to verify.	Much of data is not new. Data sheets conclude a level of 10.04 ft. The 11,000 gal and 12,000 gal volumes are estimates. It is likely these volumes were estimated with a slant towards the worst case liquid volume.
WHC-EP-0182-42 (Hanlon 1991)	Unknown volume, isolated 1985 (*Waste Storage Tank Status and Leak Detection Criteria* document).		No new information presented.
DOE/RL-92-16 (DOE-RL 1993)	Years in Service = 1976[A] Received radioactively contaminated liquid with estimated 75,700 L (28,000 gal) of sludge/drainage from T Plant. Total fluid volume received = 105.98 m^3 [B] (current volume of tank).	[A] The settling tank was not in service in 1976 (must be a typo). [B] 28,000 gal.	No technical basis provided for volume.

Table B-11. Determination of Best Available Information for 241-T-361 Settling Tank. (6 Pages)

Reference	Information from Cited Reference	Supporting Comments on Reference Information	Evaluation of Reference
WHC-SD-EN-ES-040 (Freeman-Pollard 1994)	• 11,000 gal supernatant (WHC-SD-DD-TI-057) • No liquid in the tank (Stabilization Form) • 15,500 Ci beta/gamma and 2 kg Pu[A] • Pu must be <390 g (Harlow 1974) • >2 kg Pu (HW-33591) • Nothing added after 1950 (WHC-SD-DD-TI-057) • 2,125 Ci beta/gamma with unknown Pu content.[B] Figure 2-22 shows 11,000 gal liquid and 12,000 gal solid. Appendix A, p. 61 quotes concentrations for sludge analysis given in ARHC-021677. • 4.4 lb Pu (15,500 Ci beta/gamma) in 28,000 gal sludge (DOE/RL-91-61). 24,500 gal waste (Stabilization Form 7/10/85).[C] Appendix A, p. 62 states 1.13e7 l went to 216-T-3 reverse well and 4.5e7 l went to 216-T-6 Crib.[D] Table 6-1 presents ranking: H2 = M FeCN = L Org = M Flam = L Vap = M Integ = L Rad = H Crit = M	[A] Should call out RHO-WM-PL-10 and WHC 1987. [B] States contained in WIDS, is not given in WIDS. [C] Not able to verify. [D] This yields a total of 5.6E7 l (1.5E7 gal), which is much less than the total flow to 241-T-361 (170E6 gal) given in Harlow (1974). The reason for the discrepancy is unknown.	Much of this data is not new. Volume of 24,500 gal sludge and 0 gal supernate said to be presented in the stabilization evaluation form is reasonably consistent with HW-7775 level data, and is believed to be the best volume information available. ***CONCLUSION: Will use a volume of 24,500 gal sludge and 0 gal supernate as final volumes.***
WHC-EP-0775 (Wang and Powers 1994)	The tank is estimated to contain over 15,000 Ci Cs Table B-1, normal capacity = 36,000 gal, 24,500 gal solids, 0 gal supernate.[A] Table A-6 - volatiles and semi-volatiles indicated.[B] Gives the following rankings: H2 = H FeCN = L Org = M* Heat = L Crit = L Flam = H Vap = H Leak = M Rad = H	[A] Information very likely quoted from WHC-SD-EN-ES-040. [B] No organics were used during the service life of this settling tank.	No basis for 15,000 Ci Cs, it appears to be based on the Cs concentration given in ARHC-021677. Therefore, there is no new information presented.
WHC-EP-0861 (Powers 1995)	Estimated to contain over 15,000 Ci Cs. Table A-1, normal capacity=36,000 gal with 24,500 gal solids, 0 gal supernate.[A] Table A-7 - volatiles and semi-volatiles indicated.[B]	[A] Information very likely quoted from WHC-SD-EN-ES-040. [B] No organics were used during the service life of this settling tank.	No new information presented.
WIDS 1999[A]	No inventory information.	[A] Waste Information Data System, owned and operated by BHI.	No new information presented.

Table B-11. Determination of Best Available Information for 241-T-361 Settling Tank. (6 Pages)

Reference	Information from Cited Reference	Supporting Comments on Reference Information	Evaluation of Reference
Conclusion	Chemical concentrations: ARHC-021677 Radiological concentrations: ARHC-021677^+Harlow 1974[B, C] Volume of Sludge: WHC-EN-ES-ED-040 Volume of Supernatant: WHC-EN-ES-ED-040	[A] All concentrations given in ARHC-021677 are used in determining the total inventory with the exception of the concentration given for Cs, which was judged to be unrealistically high. The Cs concentration given in ARHC-021677 was much higher than that found in the supernate, which is opposite of what would be expected. The Cs concentration should be lower in the sludge than the supernate (as Cs is soluble in water and would not have precipitated out). [B] The liquid concentration of Cs given in Harlow (1974) is included in determining the total inventory. This concentration is judged to be reasonable and applicable in to the sludge contained within 241-T-361. [C] Also the total U discharged to 241-T-361 is included in determining the total inventory since ARHC-021677 did not test for U. This value is calculated based on the average flow concentration of U multiplied by the total flow to the tank (both are given in Harlow [1974]). The value is conservative and bounding as a portion (likely around half) was discharged to the 216-T-3 reverse well or the 216-T-6 Crib.	Estimated Total Inventory: Sludge Volume = 24,500 gal Supernate Volume = 0 gal Bulk Density (2.53 g/cc) Total Volume = 2.3 E+08 g Total Concentration* Est. Inventory Al <1.0% <2.3E+6 g Fe 2.0% 4.7E+6 g CO3 0.9% 2.1E+6 g Ca 0.6% 1.4E+6 g NO2 1.4% 3.3E+6 g NO3 17.4% 4.1E+7 g SO4 <1.0% <2.3E+6 g PO4 1.0% 2.3E+6 g Ni 5.8% 1.4E+7 g Si 1.8% 4.2E+6 g Na 3.1% 7.3E+6 g Mg 0.2% 4.7E+5 g Mn 1.7% 4.0E+6 g Pu 2.30E-5 g/g 5.4E+3 g 89+90Sr 0.120 µCi/g 2.8E+1 g 137Cs 3.71 µCi/gal 9.1E-2 Ci Total Flow Ave. Flow Conc. Est. Total Inventory U 170EE+6 gal * 1.33E-4 g/gal <2.3E+4 g * Radiological inventory is original data – no decay

Table B-12. Evaluation of Best Available Information to Determine Relative Risk Rankings for IMUST Tank 241-T-361. (2 Pages)

Tank Number	Tank Type	Relative Ranking on Potential Safety Issues[a,b]									Sludge Volume (gal)	Liquid Volume (gal)	Total Volume (gal)	Notes
		H_2	FeCN	Org	Heat	Crit	Flam	Vap	Leak	Rad				
241-T-361	Settling	None Note 1	N/A Note 2	N/A Note 3	L Note 4	L Note 5	None Note 6	L Note 7	L Note 8	L Note 9	24,500 Note 10	0 Note 11	24,500	*Inventory of tank based on ARHC-021677 and Harlow (1974) (see Note 12).*

The following evaluation/qualitative risk ranking notes were based on a multidisciplinary peer review of the historical process chemicals, available sample data and other documents (cited in Table B-11) as described in Section A.2. The review was conducted to identify the best available information and to determine if there were any potential chemical vulnerability or other safety issues associated with the ERC IMUST tanks. The review was specifically directed toward identifying existing conditions that would have any severe consequences or conditions that could become more hazardous over time (e.g., through evaporation, chemical decomposition, or introduction of water).

NOTES:

Note 1: Hydrogen. Although liquids may still remain in the tank, the hydrogen generation rates (from either radiolytic decomposition of water or chemicals or chemical reactions not induced by radiation) are expected to be low (i.e., the estimated Cs and cited Sr concentrations are fairly low). Further, the 241-T-361 tank is not hermetically sealed (eight risers extend above grade) and any hydrogen generated would be expected to diffuse through the porous concrete walls or unsealed openings. In addition, the tank is underground, isolated (as described in Section 3.0), constructed of unlined concrete, and contains no ignition sources. Accordingly, a qualitative risk ranking of NONE was assigned for hydrogen generation and buildup.

Note 2: Ferrocyanide. The 241-T-361 tank was not in the ferrocyanide process flow path (did not receive waste that contained ferrocyanide). Accordingly, ferrocyanide reactivity is not a safety issue for this tank. The risk ranking is N/A.

Note 3: Organic Salt. Organic salt reactions require the presence of organic salts and high temperatures. There is no known heat source (either external or from internal chemical reactions) that could cause organic salt reactions. Also, there were no organics used during the service life of this tank. Accordingly, organic salt reactivity is not a safety issue for this tank. The risk ranking is N/A.

Note 4: Heat. A sludge sample taken in 1977 (having low Cs and Sr concentrations) demonstrated a heat generation rate of 10^{-4} W/L (ARHC-021677). In the past twenty years it is likely that the heat generation will have dropped, due to decay. Actual or potential sources of heat (radioactive decay or chemical reactions) are insignificant and would not result in consequential changes in the tank status. Therefore, the risk ranking for high heat is LOW.

Note 5: Criticality. The amount of fissionable materials estimated in the settling tank exceeds the subcritical mass limits for an optimum plutonium system. However, the fissionable materials are known (based on tank farms work summarized in WHC-SD-WM-TI-725 [Bratzel et al. 1996]) to adhere to other molecules and tend to be fairly uniformly dispersed through the waste matrix, and the concentration is substantially less than the minimum critical concentration in soil or waste (i.e., the sample results of 2.3e-5 g/g [1.4 mCi/g, if all Pu-239] of waste are significantly less than the minimum critical concentration of 27 mCi/g in an optimum SiO2 system). Since SiO2 is considered a more optimal moderation medium than a typical waste matrix, and in the current S&M state there is no concentration mechanism that could lead to criticality, the risk ranking for criticality is judged to be LOW.

Note 6: Flammability. As noted above, although there may be some potential for generation of small amounts of hydrogen, there is no credible potential for hydrogen accumulation or ignition of flammable materials. Also, there were no organics used during the service life of this tank. As the conditions required for a reaction are not all met, the risk ranking for flammability is NONE.

Note 7: Vapor Emissions. The sample results do not identify the presence of volatile inorganic materials, nor the potential interactions that would produce noxious vapors. As noted above, some hydrogen may be generated and diffused from the tanks through unsealed openings and the effects of atmospheric pumping. The tank is located outside with no direct paths to vent the tank, any consequences would be minimal. Therefore, the vapor emissions resulting from this are judged to be of LOW risk ranking.

Note 8: Leak Potential. As stated in Note 11, although documents indicate no pumpable liquids remain in the tank, some small amount of liquids may remain. The potential for degradation of a reinforced concrete tank is likely. However, the remaining sludge is not highly mobile and the quantity is much less than that which was discharged to the corresponding solid column units. Since the tank liquids were routinely discharged to the soil column (via the reverse well or crib), the impacts of this small additional amount of tank leakage to the environment is not judged to be significant. The risk ranking for tank leak potential is judged to be LOW.

Note 9: Radiation. The tank is known to contain radiological material. However, the tank is below grade and shielded by several feet of soil. In the S&M state, the tank poses little to no radiation exposure to workers. The risk ranking for radiation is judged to be LOW.

Table B-12. Evaluation of Best Available Information to Determine Relative Risk Rankings for IMUST Tank 241-T-361. (2 Pages)

Tank Number	Tank Type	Relative Ranking on Potential Safety Issues[a,b]									Sludge Volume (gal)	Liquid Volume (gal)	Total Volume (gal)	Notes
		H_2	FeCN	Org	Heat	Crit	Flam	Vap	Leak	Rad				

Note 10: Sludge Volume. The sludge volume reported in WHC-SD-EN-ES-040 was cited from a Stabilization Evaluation Form. Although this form could not be located in archive files when BHI performed the records search for the preparation of this document, this information is believed to be the most accurate sludge volume for the tank.

Note 11: Liquid Volume. WHC-SD-EN-ES-040 cites the stabilization evaluation form for 241-T-361, stating that no supernatant remains in the tank. Although this form could not be located in archive files when BHI performed the records search for the preparation of this document, this information is believed to be the most accurate liquid volume for the tank. However, some liquid may remain in the tank.

Note 12: The sample data reported in ARHC-021677 for both radiological and chemical constituents is believed to be the most accurate inventory concentration information for the tank (with the exception of the concentration of Cs [which is too high] and the lack of concentration data for U). The concentration of Cs should be higher in the supernatant than in the sludge and previous supernate tank concentrations (given in ARHC-021677) seem more correct. Since ARHC-021677 did not sample for U the Harlow 1974 average flow data was used as a conservative bound in estimating the total inventory of U remaining in 241-T-361. Therefore, these two sources were used in establishing a representative inventory.

UNCERTAINTY. The concentrations of ARHC-021677 and Harlow (1974) are likely on the high end (as the postulated inventory of Pu is greater than the total throughput of 241-T-361 given in HW-28121). There is some uncertainty in regards to the presence of liquids. Risk ranking decisions were based on both the potential and the consequences, using process knowledge, as detailed in Sections A.2 and A.3. The postulated concentrations did not play an important role in these determinations.

BHI RECOMMENDATION. Based on the above evaluations, BHI believes the tank does not represent either an imminent or foreseeable safety concern. BHI staff concluded that continued S&M of the tank under the RARA program represents no significant risks to the worker, public, or environment. Due to uncertainties within the estimated data, sampling/detailed characterization should be considered to provide a decisional basis for remediation or ultimate disposition of the tank.

[a] Relative rankings: H = high; M = moderate; and L = low.
[b] Issue abbreviations:

H_2	=	hydrogen generation and buildup	Flam	=	flammability
FeCN	=	ferrocyanide reactivity	Vap	=	emission of radioactive or toxic vapors
Org	=	organic salt reactivity	Leak	=	leak potential
Heat	=	high heat	Rad	=	radioactivity.
Crit	=	criticality			

Table B-13. Determination of Best Available Information for 270-W Neutralization Tank. (3 Pages)

Reference	Information from Cited Reference	Supporting Comments on Reference Information	Evaluation of References
HW-83718 (Doud 1964)	Crib 216-U-8 received process condensate and stack drain (p. 9). Crib 216-U-8 Start 6/52 Stop 4/60		No information regarding inventory or volume.
ARH-947, Rev. 1 (Curren 1972)	Quotes HW-83718 exactly (p. 10).		No new information is presented.
Letter from D. G. Harlow to J. A. Teal 07/31/74 (Harlow 1974)	270-W is part of the line to 216-U-12 Crib. Liquid flowing into the tank 1.64E-9 Ci/gal of beta, 9.69E-5 g/gal of U, 1E-9 g/gal of Pu. Liquid volume (w/no limestone) = 3,780 gal.[A] Liquid volume (w/limestone) = 1,500 gal.[B]	[A] Yields 1E-5 Ci beta, 3.66E-1 g U, 3.78E-6 g Pu. [B] Yields 4E-6 Ci beta, 1.45E-1 g U, 1.5E-6 g Pu.	The average flow data was likely based on process flow sheets.
ARH-CD-371 4Q (Anderson 1976)	P. 28 present a summary of inventory passing through the 270-W neutralization tank up to 1976.[A] Crib 216-U-8 Start 6/52 Stop 3/60 Pu g 3.7E2 β Ci 2.7E3 Sr Ci <0.1 Ru Ci 2.3E2 Cs Ci <0.1 Co Ci <0.1 U kg 2.4E4 Liters 3.79E8	[A] Crib 216-U-8 was no longer in operation, therefore this should be a summary of the final inventory. Operations dates slightly different than ARH-947.	Presents radiological inventories discharged to crib. ***CONCLUSIONS: Will use all concentrations presented here in calculating the total inventory.***
RHO-CD-673 (Maxfield 1979)	Quotes ARH-CD-371 4Q.		No new information is presented.

Table B-13. Determination of Best Available Information for 270-W Neutralization Tank. (3 Pages)

Reference	Information from Cited Reference	Supporting Comments on Reference Information	Evaluation of References
PNL-6456 (Stenner et al. 1988)	Crib 216-U-8 6/52-3/60 received process condensate from 221-U Building and the 291-U stack drainage. was deactivated in 3/60 when ground settling occurred, acidic. Gives inventory discharged to 216-U-8 decayed through April 1, 1986 (p. 586 and 587). Crib 216-U-8 Start 6/52 Stop 3/60 Pu239 Ci 2.18E1 Pu240 Ci 5.7 β Ci 7.68E-1 Sr Ci 4.72E-2 Cs Ci 4.96E-2 Co Ci 2.04E-3 U238 Ci 8.04 Liters 3.78E8 Gives chemical inventory of 2E5 kg nitric acid.	Operations dates agree with HW-83718. Volume essentially agree with ARH-CD-371 4Q. Radiological inventory appears to be RHO-CD-673 data decayed.	Presents chemical inventories discharged to crib. ***CONCLUSIONS: Will use chemical concentrations presented here in calculating the total inventory.***
WHC-EP-0560 (Neilsen 1992)	P. 3-1 If the 3,780 gal tank was full of liquid only it would contain 10 µCi beta, 0.4 gm U, 4 µgm Pu.[A] Unknown amount of spent limestone sludge. Contains trace amounts of hydrogen fluoride, mercury, acetone, 2-butanol, 2-butanone, and n-nitrosodimethylamine. Could contain U, U oxide and other. The document states that additional analysis is necessary before making a waste designation.	[A] Agrees with Harlow (1974) concentrations.	No new information is presented.
WHC-SD-EN-ES-040 (Freeman-Pollard 1994)	P. A-55 Says no info on volume, unknown. Figure 2-22 capacity 3,800 gal, suggests probably full Table 6-1 presents the following rankings: H2 = L FeCN = L Org = M Flam = L Vap = L Integ = H Rad = L Crit = L Contents unknown.		No new information is presented.
WHC-EP-0775 (Wang and Powers 1994)	Table B-1 states normal capacity = 3,780 gal, solids vol=no data, supernate volume = no data, assumed all void.[A]	[A] Information very likely quoted from WHC-SD-EN-ES-040.	No new information is presented.

Table B-13. Determination of Best Available Information for 270-W Neutralization Tank. (3 Pages)

Reference	Information from Cited Reference	Supporting Comments on Reference Information	Evaluation of References
WHC-EP-0861 (Powers 1995)	Table A-1 states normal capacity = 3,780 gal, solids vol=no data, supernate volume = no data, assumed all void.[A]	[A] Information very likely quoted from WHC-SD-EN-ES-040.	No new information is presented.
WHC-EP-0182-99 (Hanlon 1996)	Table G-3 states that 270-W received condensate from 221-U of an unknown volume and was isolated in 1970.		No information regarding inventory or volume.
WIDS 1999[A]	Likely to contain unknown amount of spent limestone sludge (U, U oxide, and other) – additional analysis required before making a waste designation (discharged to 216-U-8) Building 2715-UA built over. • Last liquid to tank (2.64E-9 Ci/gal beta, 9.69E-5 g/gal U, 1E-9 g/gal Pu) (Harlow 1974)	[A] Waste Information Data System, owned and operated by BHI.	No new information presented.
Conclusion	Chemical concentrations: PNL-6456 Radiological concentrations: ARH-CD-371 4Q Volume of Sludge: <3,780 gal[A] Volume of Supernatant: <3,780 gal[B]	[A] The amount of sludge in the tank is unknown, but cannot exceed the working capacity of 3,780 gal. [B] The amount of supernate in the tank is unknown but cannot exceed the working capacity of 3,780 gal.	Estimated Total Inventory: Sludge Volume = <3,780 gal Supernate Volume = <3,780 gal Total Volume = <3,780 gal Total Volume = <1.4E+04 l Total Concentration* Est. Inventory Co <0.1 Ci/ 3.8E+8 l <3.8E-6 Ci Cs <0.1 Ci/ 3.8E+8 l <3.8E-6 Ci Sr <0.1 Ci/ 3.8E+8 l <3.8E-6 Ci Pu 3.7E+2 g/ 3.8E+8 l 1.4E-2 g U 2.4E+7 g/ 3.8E+8 l 9.0E+2 g Beta 2.7E+3 Ci/ 3.8E+8 l 1.0E-1 Ci Ru 2.3E+2 Ci/ 3.8E+8 l 8.7E-3 Ci Nitric Acid 2E+5 kg/ 3.8E+8 l 7.5 kg * Concentration is calculated by dividing the total discharge inventory by the total flow, radiological inventory is original data – no decay.

Table B-14. Evaluation of Best Available Information to Determine Relative Risk Rankings for IMUST Tank 270-W. (2 Pages)

Tank Number	Tank Type	Relative Ranking on Potential Safety Issues[a,b]									Sludge Volume (gal)	Liquid Volume (gal)	Total Volume (gal)	Notes
		H_2	FeCN	Org	Heat	Crit	Flam	Vap	Leak	Rad				
270-W	Neutralization Tank	None Note 1	N/A Note 2	None Note 3	L Note 4	None Note 5	None Note 6	L Note 7	L Note 8	L Note 9	<3,780 Note 10	<3,780 Note 11	<3,780	*Estimated inventory of tank based on average concentration of discharges to the 216-U-8 Crib cited in ARH-CD-371 4Q and PNL-6456. See Note 12*

The following evaluation/qualitative risk ranking notes were based on a multidisciplinary peer review of the historical process chemicals, available sample data and other documents (cited in Table B-13) as described in Section A.2. The review was conducted to identify the best available information and to determine if there were any potential chemical vulnerability or other safety issues associated with the ERC IMUST tanks. The review was specifically directed toward identifying existing conditions that would have any severe consequences or conditions that could become more hazardous over time (e.g., through evaporation, chemical decomposition, or introduction of water).

NOTES:

Note 1: Hydrogen. Although liquids may still remain in the tank, the hydrogen generation rates (from either radiolytic decomposition of water or chemicals or chemical reactions not induced by radiation) are expected to be low (i.e., the Cs and Sr concentrations are very low). Further, the 270-W tank is not likely hermetically sealed and any hydrogen generated would be expected to diffuse through unsealed openings. In addition, the tank is underground, isolated (as described in Section 3.0), and contains no ignition sources. Accordingly, a qualitative risk ranking of NONE was assigned for hydrogen generation and buildup.

Note 2: Ferrocyanide. The 270-W tank was not in the ferrocyanide process flow path (did not receive waste that contained ferrocyanide). Accordingly, ferrocyanide reactivity is not a safety issue for this tank. The risk ranking is N/A.

Note 3: Organic Salt. Organic salt reactions require the presence of organic salts and high temperatures. Although there may be trace amounts of organic materials remaining in the tank, there is no known heat source (either external or from internal chemical reactions) that could cause organic salt reactions. Also, the design of the tank (which would overflow to a crib) does not allow for the formation of a floating layer. As the conditions required to initiate a reaction are not all met, the risk ranking for an organic salt reaction is NONE.

Note 4: Heat. The Cs and Sr concentrations for the estimated tank residual inventory are very low. There is no evidence that any significant heat generation is occurring in the tank. Actual or potential sources of heat (radioactive decay or chemical reactions) are insignificant and would not result in consequential changes in the tank status. Therefore, the risk ranking for high heat is LOW.

Note 5: Criticality. Based on the average concentration of discharges to the 216-U-8 Crib, the amount of residual fissionable materials remaining in the tank is estimated to be 1.4 E-02 g Pu. This amount of fissionable material is significantly less than subcritical mass limits for an optimum plutonium system and is likely to be fairly uniformly distributed through the waste matrix; accordingly, the potential for criticality is judged to be NONE.

Note 6: Flammability. As noted above, although there may be some potential for generation of very small amounts of hydrogen, there is no credible potential for hydrogen accumulation or ignition of flammable materials. Although there may be trace amounts of organic solvents in the tank, the concentrations are not likely to be significant. As the conditions required for a reaction are not all met, the risk ranking for flammability is NONE.

Note 7: Vapor Emissions. There may be trace amounts of volatile organic or inorganic materials in the tank. However, based on the examination of waste stream records and process documents, the potential for the production of noxious vapors is not considered likely. As noted above, some small amounts of hydrogen may be generated and diffused from the tank. The tank is located outside with no direct paths to vent the tank, any consequences would be minimal. Therefore, the vapor emissions resulting from this are judged to be of LOW risk ranking.

Note 8: Leak Potential. It is likely that some liquids may remain in the tank and the integrity of the tank is unknown. However, since the tank liquids were routinely discharged to the soil column (via the 216-U-8 Crib), the impacts of this small additional amount of liquid leaking to the environment is not judged to be significant. Accordingly, the risk ranking for tank leak potential is judged to be LOW.

Note 9: Radiation. The tank is known to contain radiological material. However, the tank is below grade and shielded by several feet of soil and the potential source term is small. In the S&M state, the tank poses little to no radiation exposure to workers. The risk ranking for radiation is judged to be LOW.

Table B-14. Evaluation of Best Available Information to Determine Relative Risk Rankings for IMUST Tank 270-W. (2 Pages)

Tank Number	Tank Type	Relative Ranking on Potential Safety Issues[a,b]									Sludge Volume (gal)	Liquid Volume (gal)	Total Volume (gal)	Notes
		H_2	FeCN	Org	Heat	Crit	Flam	Vap	Leak	Rad				

Note 10: Sludge Volume. The amount of sludge remaining in the tank is not known, but cannot exceed the working capacity of the tank (3,780 gal). It is likely that there is a limestone/sludge mixture which maybe topped off with materials that were used to fill the charging riser prior to the construction of the 2715-UA Building.

Note 11: Liquid Volume. The amount of liquid remaining in the tank is not known, but cannot exceed the working capacity of 3,780 gal. Drawing H-2-32485 (conceptual drawing) indicates filling of the charging riser was a pre-condition to construction of 2715-UA Building (which was constructed in the 1960's) but could not be verified as having been done. Drawing H-2-43118 note (from 1970) states the tank was abandoned and lines were capped. No formal documentation of as-builts could be located. Some amount of liquid may remain in the tank, but the majority of the liquid was displaced if the charging riser was filled. Drawing SK-2-56961 shows both the inlet line to the 270-W tank and the tank outlet line to the 216-U-8 Crib were plugged and the bypass line around the 270-W was blanked off. According to WHC-SD-EN-ES-040, visual inspection of the site indicates that the charging and vent risers were cut below ground level and a cement slaboratory poured over them.

Note 12: The inventory data for total process condensate and stack drain discharges to the 216-U-8 Crib (presented in ARH-CD-371 4Q) is believed to be the most accurate radionuclide constituent inventory information for materials that passed through the 270-W neutralization tank, while the inventory data presented in PNL-6456 is believed to be the most accurate chemical constituent inventory information. This data has been used to determine an average concentration of waste throughput, which was applied to a worst case waste volume to estimate the total remaining inventory in the tank. Although Harlow (1974) refers to subsequent process condensate and stack drain discharges to another crib (216-U-12), it is not known if the subsequent discharges were routed through or around the 270-W tank (Harlow [1974] refers to a bypass line around 270-W). A review of associated engineering drawings could not clarify whether liquids flowing to the 216-U-12 Crib were sent through or around 270-W neutralization tank. Therefore, these two sources were used in establishing a representative inventory.

Even if subsequent discharges were made to the 216-U-12 Crib through the 270-W tank, since the waste streams were not changed, use of the average concentration for discharges based on the 216-U-8 Crib data is reasonable. It is noted that the chemical inventory for nitric acid is for 200,000 kg of nitric acid in 380 million L of discharges, <1% by weight.

UNCERTAINTY. As noted above, there is no documentation of liquid or sludge volumes remaining in the tank. The volume is not known. However, hazards related to both minimal volume levels and maximum volume levels are considered, and the waste volume was found to be a minor issue. Potential volumes of liquids pose no more risk than the existing crib waste that surrounds the tank. The residual inventory has been estimated based on average concentrations of discharges to the cribs, assuming the tank is filled to working capacity, with no volume occupied by limestone fill. This is a conservative approach and provides some confidence that the estimated tank inventory is reasonable. Risk ranking decisions were based on both the potential and the consequences, using process knowledge, as detailed in Sections A.2 and A.3. The postulated concentrations did not play an important role in these determinations.

BHI RECOMMENDATION. Based on the above evaluations, BHI believes the tank does not represent either an imminent or foreseeable safety concern. BHI staff concluded that continued S&M of the tank under the RARA program represents no significant risks to the worker, public, or environment.

[a] Relative rankings: H = high; M = moderate; and L = low.
[b] Issue abbreviations:

H_2	=	hydrogen generation and buildup	Flam	=	flammability
FeCN	=	ferrocyanide reactivity	Vap	=	emission of radioactive or toxic vapors
Org	=	organic salt reactivity	Leak	=	leak potential
Heat	=	high heat	Rad	=	radioactivity.
Crit	=	criticality			

Table B-15. Determination of Best Available Information for 200-E-58 Neutralization Tank.

Reference	Information from Cited Reference	Supporting Comments on Reference Information	Evaluation of References
HW-31000, Volume 2, Part II (GE 1955) WIDS	216-A-5 Start 12/55 Stop 10/66 216-A-10 Start 11/61 Stop 11/66	216-A-5 actively received neutralized process condensate effluent from 202-A through 11/61. The unit was in standby service for the 216-A10 Crib from 12/55 to 11/66. Last documented discharges were 10/66. 216-A-10 was in active service until its closure in 11/66. 216-A-5 Total condensate 1,630,000,000 L 216-A-10 Total condensate 3,210,000,000 L	The *PUREX Technical Manual*, HW-31000, Vol. 2, Part II, (page 1028) indicates that proportional samplers were provided for routine analysis. The manual indicates a low-level stream that contained trace amount of nitric acid. Manual also indicate process stream was similar to 270-W. Investigation and consultation with data and records specialist was unable to recovery any of the sample data that was specified in HW-31000.
DOE/RL-2000-60, Rev. 0 (DOE-RL 2001)	Crib 216-A-10 received process condensate from (a.k.a. 216-A-TK-1) 200-E-58.	Crib received low-level neutralized waste contained fractions of tritium, Sr-90, I-129, Am-241, Cs-137, Pu-238, Pu239/240 (350 total Pu) and 241kg of U.	DOE/RL-2000-60 provides a comprehensive review of the available characterization data and history which, is reflected in the WIDS database. No information regarding inventory concentrations specific to .200-E-58 IMUST tank.
Conclusion	Upper bound estimate based on crib volumes and inventory derived from DOE/RL-2000-60. Chemicals: nitrate, calcium carbonate Volume of calcium carbonate: 17,034 L Volume of Supernatant: 11,356 L	Though it is likely that the system may have been flushed in deactivation and upper bound estimate is assumed. Upper bound estimate is based on estimates of concentrations based on discharges to cribs. Highest isotopic concentrations to either the A-5 or A-10 Cribs are assumed. Minimal sludge volumes are assumed to maximize activity estimates. Typically calcium carbonate volumes would be 80 to 70% by volume. 60% is assumed.	Nitrate **6.97E+00** kg Total U **1.82E-03** kg Total Pu **1.24E-03** gm Am-241 **2.72E-06** Ci Cs-137 **2.85E-04** Ci Sr-90 **2.92E-04** Ci The inventory is calculated based on the highest concentration of 216-A-5 and 216-A10 cribs and 40% volume of Supernatant (11.36 m^3) in the tank.

[1]*PUREX Technical Manual*, HW-31000, March 1955, General Electric Company, Richland, Washington.
[2]DOE/RL, 2001, *200-PW-2 Uranium Rich Process Waste Group Operable Unit RI/FS Work Plan and Process Waste RCRA TSD Unit Sampling Plan*, DOE/RL 2000-60, Rev. 0, U.S. Department of Energy, Richland Operations Office, Richland, Washington.

Table B-16. Evaluation of Best Available Information to Determine Relative Risk Rankings for IMUST Tank 200-E-58 (2 Pages)

Tank Number	Tank Type	Relative Ranking on Potential Safety Issues[a,b]									Sludge Volume (L)	Liquid Volume (L)	Total Volume (L)	Notes
		H_2	FeCN	Org	Heat	Crit	Flam	Vap	Leak	Rad				
200-E-58	Neutralization Tank	None Note 1	N/A Note 2	None Note 3	L Note 4	None Note 5	None Note 6	L Note 7	L Note 8	L Note 9	17,034	11,356	28,350	*Based on average crib concentrations (216-A-5 and 216-A-10).*

The following evaluation/qualitative risk ranking notes were based on a multidisciplinary peer review of the historical process chemicals, available sample data and other documents (cited in Table B-13) as described in Section A.2. The review was conducted to identify the best available information and to determine if there were any potential chemical vulnerability or other safety issues associated with the ERC IMUST tanks. The review was specifically directed toward identifying existing conditions that would have any severe consequences or conditions that could become more hazardous over time (e.g., through evaporation, chemical decomposition, or introduction of water).

NOTES:

Note 1: Hydrogen. Although liquids may still remain in the tank, the hydrogen generation rates (from either radiolytic decomposition of water or chemicals or chemical reactions not induced by radiation) are expected to be low (i.e., the Cs and Sr concentrations are very low). Further, the 200-E-58 tank is not likely hermetically sealed and any hydrogen generated would be expected to diffuse through unsealed openings. In addition, the tank is underground, isolated (as described in Section 3.0), and contains no ignition sources. Accordingly, a qualitative risk ranking of NONE was assigned for hydrogen generation and buildup.

Note 2: Ferrocyanide. The 200-E-58 tank was not in the ferrocyanide process flow path (did not receive waste that contained ferrocyanide). Accordingly, ferrocyanide reactivity is not a safety issue for this tank. The risk ranking is N/A.

Note 3: Organic Salt. Organic salt reactions require the presence of organic salts and high temperatures. Although there may be trace amounts of organic materials remaining in the tank, there is no known heat source (either external or from internal chemical reactions) that could cause organic salt reactions. Also, the design of the tank (which would overflow to a crib) does not allow for the formation of a floating layer. As the conditions required to initiate a reaction are not all met, the risk ranking for an organic salt reaction is NONE.

Note 4: Heat. The Cs and Sr concentrations for the estimated tank residual inventory are very low. There is no evidence that any significant heat generation is occurring in the tank. Actual or potential sources of heat (radioactive decay or chemical reactions) are insignificant and would not result in consequential changes in the tank status. Therefore, the risk ranking for high heat is LOW.

Note 5: Criticality. Based on the analogous mass of fissionable material 1.24E-03 Pu. This amount of fissionable material is significantly less than subcritical mass limits for an optimum plutonium system and is likely to be fairly uniformly distributed through the waste matrix; accordingly, the potential for criticality is judged to be NONE.

Note 6: Flammability. As noted above, although there may be some potential for generation of very small amounts of hydrogen, there is no credible potential for hydrogen accumulation or ignition of flammable materials. Although there may be trace amounts of organic solvents in the tank, the concentrations are not likely to be significant. As the conditions required for a reaction are not all met, the risk ranking for flammability is NONE.

Note 7: Vapor Emissions. There may be trace amounts of volatile organic or inorganic materials in the tank. However, based on the examination of waste stream records and process documents, the potential for the production of noxious vapors is not considered likely. As noted above, some small amounts of hydrogen may be generated and diffused from the tank. The tank is located outside with no direct paths to vent the tank, any consequences would be minimal. Therefore, the vapor emissions resulting from this are judged to be of LOW risk ranking.

Note 8: Leak Potential. It is likely that some liquids may remain in the tank and the integrity of the tank is unknown. However, since the tank liquids were routinely discharged to the soil column (via the 216-A-5 and 216-A-10), the impacts of this small additional amount of liquid leaking to the environment is not judged to be significant. Accordingly, the risk ranking for tank leak potential is judged to be LOW.

Note 9: Radiation. The tank is known to contain radiological material. However, the tank is below grade and shielded by several feet of soil and the potential source term is small. In the S&M state, the tank poses little to no radiation exposure to workers. The risk ranking for radiation is judged to be LOW.

Table B-16. Evaluation of Best Available Information to Determine Relative Risk Rankings for IMUST Tank 200-E-58 (2 Pages)

Tank Number	Tank Type	Relative Ranking on Potential Safety Issues[a,b]									Sludge Volume (L)	Liquid Volume (L)	Total Volume (L)	Notes
		H_2	FeCN	Org	Heat	Crit	Flam	Vap	Leak	Rad				
UNCERTAINTY. As noted above, there is no documentation of liquid or sludge volumes remaining in the tank. The volume is not known. However, hazards related to both minimal volume levels and maximum volume levels are considered, and the waste volume was found to be a minor issue. Potential volumes of liquids pose no more risk than the existing crib waste that surrounds the tank. The residual inventory has been estimated based on average concentrations of discharges to the cribs, assuming the tank is filled to working capacity, with no volume occupied by limestone fill. This is a conservative approach and provides some confidence that the estimated tank inventory is reasonable. Risk ranking decisions were based on both the potential and the consequences, using process knowledge, as detailed in Sections A.2 and A.3. The postulated concentrations did not play an important role in these determinations.													
BHI RECOMMENDATION. Based on the above evaluations, BHI believes the tank does not represent either an imminent or foreseeable safety concern. BHI staff concluded that continued S&M of the tank under the RARA program represents no significant risks to the worker, public, or environment.														

[a] Relative rankings: H = high; M = moderate; and L = low.
[b] Issue abbreviations:

H_2	=	hydrogen generation and buildup	Flam	=	flammability
FeCN	=	ferrocyanide reactivity	Vap	=	emission of radioactive or toxic vapors
Org	=	organic salt reactivity	Leak	=	leak potential
Heat	=	high heat	Rad	=	radioactivity.
Crit	=	criticality			

Table B-17. Determination of Best Available Information for 270-E-1 Neutralization Tank.

Reference	Information from Cited Reference	Supporting Comments on Reference Information	Evaluation of References
DOE/RL-2000-60, Rev. 0 (DOE-RL 2001) RHO-CD-63 (Maxfield 1979) PNL-6456 (Stenner et al. 1988) DOE/RL-88-19 (DOE-RL 1998)	Crib 216-B-12 received process condensate. Crib 216-B-12 Start 11/52 Inactive 12/57 Restart 5/67 Stop 11/67	Crib received neutralized (i.e., low salt neutral /basic condensate waste from 221-U, 224-U, 221-B facilities. Crib inventories 180,000 kg ammonia nitrate TBP also indicated No Quantity Radionuclides include Co-60, Cs-137, and Pu-239/240 Total condensate 520,000,000 L	DOE/RL-2000-60 provides a comprehensive review of the available characterization data and history which, is reflected in the WIDS database. No information regarding inventory concentrations specific to .270-E-1 IMUST tank. No concentration data available for period of 270-E-1 operations
Conclusion	Chemical concentrations: Analogous with 270-W Radiological concentrations: Analogous with 270-W Volume of Sludge: <14,440 L Volume of Supernatant: <322 L	[A] 1974 records estimate the remaining sludge in the tank. [B] The amount of supernate in the tank is unknown but cannot exceed the working capacity of 14,762 L minus sludge or 322 L.	Estimated Total Inventory: Inventory 270-W / Est. Total 270-E-1 Co <3.8E-6 Ci / 8.4E-07 Ci Cs <3.8E-6 Ci / 8.4E-07 Ci Sr <3.8E-6 Ci / 8.4E-07 Ci Pu 1.4E-2 g / 3.1E-03 g U 9.0E+2 g / 2.0E+02 g Beta 1.0E-1 Ci / 2.2E-02 Ci Ru 8.7E-3 Ci / 1.9E-03 Ci * Concentration is calculated by multiplying the total inventory 270-W by the 0.22. Radiological inventory is original data – no decay.

Table B-18. Evaluation of Best Available Information to Determine Relative Risk Rankings for IMUST Tank 270-E-1. (2 Pages)

Tank Number	Tank Type	Relative Ranking on Potential Safety Issues[a,b]									Sludge Volume (L)	Liquid Volume (L)	Total Volume (L)	Notes
		H_2	FeCN	Org	Heat	Crit	Flam	Vap	Leak	Rad				
270-E-1	Neutralization Tank	None Note 1	N/A Note 2	None Note 3	L Note 4	None Note 5	None Note 6	L Note 7	L Note 8	L Note 9	<14,440	<322	<14,762	*Estimated inventory of tank based on sludge volume records and concentration of 270-W (see Table B-17).*

The following evaluation/qualitative risk ranking notes were based on a multidisciplinary peer review of the historical process chemicals, available sample data and other documents (cited in Table B-13) as described in Section A.2. The review was conducted to identify the best available information and to determine if there were any potential chemical vulnerability or other safety issues associated with the ERC IMUST tanks. The review was specifically directed toward identifying existing conditions that would have any severe consequences or conditions that could become more hazardous over time (e.g., through evaporation, chemical decomposition, or introduction of water).

NOTES:

Note 1: Hydrogen. Although liquids may still remain in the tank, the hydrogen generation rates (from either radiolytic decomposition of water or chemicals or chemical reactions not induced by radiation) are expected to be low (i.e., the Cs and Sr concentrations are very low). Further, the 270-E-1 tank is not likely hermetically sealed and any hydrogen generated would be expected to diffuse through unsealed openings. In addition, the tank is underground, isolated (as described in Section 3.0), and contains no ignition sources. Accordingly, a qualitative risk ranking of NONE was assigned for hydrogen generation and buildup.

Note 2: Ferrocyanide. The 270-E-1 tank was not in the ferrocyanide process flow path (did not receive waste that contained ferrocyanide). Accordingly, ferrocyanide reactivity is not a safety issue for this tank. The risk ranking is N/A.

Note 3: Organic Salt. Organic salt reactions require the presence of organic salts and high temperatures. Although there may be trace amounts of organic materials remaining in the tank, there is no known heat source (either external or from internal chemical reactions) that could cause organic salt reactions. Also, the design of the tank (which would overflow to a crib) does not allow for the formation of a floating layer. As the conditions required to initiate a reaction are not all met, the risk ranking for an organic salt reaction is NONE.

Note 4: Heat. The Cs and Sr concentrations for the estimated tank residual inventory are very low. There is no evidence that any significant heat generation is occurring in the tank. Actual or potential sources of heat (radioactive decay or chemical reactions) are insignificant and would not result in consequential changes in the tank status. Therefore, the risk ranking for high heat is LOW.

Note 5: Criticality. Based on the analogous mass of fissionable material, the amount of residual fissionable materials remaining in the tank is estimated to be 3.1E-03 g Pu. This amount of fissionable material is significantly less than subcritical mass limits for an optimum plutonium system and is likely to be fairly uniformly distributed through the waste matrix; accordingly, the potential for criticality is judged to be NONE.

Note 6: Flammability. As noted above, although there may be some potential for generation of very small amounts of hydrogen, there is no credible potential for hydrogen accumulation or ignition of flammable materials. Although there may be trace amounts of organic solvents in the tank, the concentrations are not likely to be significant. As the conditions required for a reaction are not all met, the risk ranking for flammability is NONE.

Note 7: Vapor Emissions. There may be trace amounts of volatile organic or inorganic materials in the tank. However, based on the examination of waste stream records and process documents, the potential for the production of noxious vapors is not considered likely. As noted above, some small amounts of hydrogen may be generated and diffused from the tank. The tank is located outside with no direct paths to vent the tank, any consequences would be minimal. Therefore, the vapor emissions resulting from this are judged to be of LOW risk ranking.

Note 8: Leak Potential. It is likely that some liquids may remain in the tank and the integrity of the tank is unknown. However, since the tank liquids were routinely discharged to the soil column (via the 216-U-8 Crib), the impacts of this small additional amount of liquid leaking to the environment is not judged to be significant. Accordingly, the risk ranking for tank leak potential is judged to be LOW.

Note 9: Radiation. The tank is known to contain radiological material. However, the tank is below grade and shielded by several feet of soil and the potential source term is small. In the S&M state, the tank poses little to no radiation exposure to workers. The risk ranking for radiation is judged to be LOW.

Table B-18. Evaluation of Best Available Information to Determine Relative Risk Rankings for IMUST Tank 270-E-1. (2 Pages)

Tank Number	Tank Type	Relative Ranking on Potential Safety Issues[a,b]									Sludge Volume (L)	Liquid Volume (L)	Total Volume (L)	Notes
		H_2	FeCN	Org	Heat	Crit	Flam	Vap	Leak	Rad				
UNCERTAINTY. As noted above, there is no documentation of liquid or sludge volumes remaining in the tank. The volume is not known. However, hazards related to both minimal volume levels and maximum volume levels are considered, and the waste volume was found to be a minor issue. Potential volumes of liquids pose no more risk than the existing crib waste that surrounds the tank. The residual inventory has been estimated based on average concentrations of discharges to the cribs, assuming the tank is filled to working capacity, with no volume occupied by limestone fill. This is a conservative approach and provides some confidence that the estimated tank inventory is reasonable. Risk ranking decisions were based on both the potential and the consequences, using process knowledge, as detailed in Sections A.2 and A.3. The postulated concentrations did not play an important role in these determinations.													
BHI RECOMMENDATION. Based on the above evaluations, BHI believes the tank does not represent either an imminent or foreseeable safety concern. BHI staff concluded that continued S&M of the tank under the RARA program represents no significant risks to the worker, public, or environment.														

[a] Relative rankings: H = high; M = moderate; and L = low.
[b] Issue abbreviations:

H_2	=	hydrogen generation and buildup	Flam	=	flammability
FeCN	=	ferrocyanide reactivity	Vap	=	emission of radioactive or toxic vapors
Org	=	organic salt reactivity	Leak	=	leak potential
Heat	=	high heat	Rad	=	radioactivity.
Crit	=	criticality			

B.6 REFERENCES

Anderson, J. D., 1976, *Radioactive Liquid Wastes Discharged to Ground in the 200 Areas During 1975*, ARH-CD-371 4Q, Atlantic Richfield Hanford Company, Richland, Washington.

Bratzel, D. R, 1996, *Tank Farm Nuclear Criticality Review*, WHC-SD-WM-TI-725, Rev. 0, Westinghouse Hanford Company, Richland, Washington.

Brown, R. E., and H. G. Ruppert, 1950, *Underground Disposal of Liquid Wastes at the Hanford Works, Washington*, HW-17088, General Electric Company, Richland, Washington.

Buckingham, J. S., 1976a, *Analyses of Tanks 361-B and 361-T Supernatant Liquid*, letter to R. L. Walser, dated April 5, 1976, Atlantic Richfield Hanford Company, Richland, Washington.

Buckingham, J. S., 1976b, *Analyses of Tank 361-U Supernatant Liquid*, letter to R. L. Walser, dated March 16, 1976, Atlantic Richfield Hanford Company, Richland, Washington.

Chiaramonte, G. R., 1996, *Hanford Sitewide Groundwater Remediation Strategy – Supporting Technical Information Report*, BHI-00464, Rev. 0, Bechtel Hanford, Inc., Richland, Washington.

Cuneo, V. J., and T. D. Anderson, 1998, *IMUST Qualitative Risk Ranking of 216-BC-201 Siphon Tank*, CCN 062352, interoffice memorandum to R. G. Egge and J. E. Rugg, dated October 6, 1998, Bechtel Hanford, Inc., Richland, Washington.

Curren, E. F., 1972, *200 Areas Disposal Sites for Radioactive Liquid Wastes*, ARH-947, Rev. 1, Atlantic Richfield Hanford Company, Richland, Washington.

DeFord, D. H., and R. W. Carpenter, 1995a, *B Plant Aggregate Area Management Study Technical Baseline Report*, BHI-00179, Rev. 0, Bechtel Hanford, Inc., Richland, Washington.

DeFord, D. H., and R. W. Carpenter, 1995b, *T Plant Aggregate Area Management Study Technical Baseline Report*, BHI-00177, Rev. 0, Bechtel Hanford, Inc., Richland, Washington.

DOE-RL, 1987, *Hanford Site Waste Management Units Report*, DOE/RL-88-30, Rev. 0, 2 vols., U.S. Department of Energy, Richland Operations Office, Richland, Washington.

DOE-RL, 1989, *Remedial Investigation/Feasibility Study Work Plan for the 200-BP-1 Operable Unit Hanford Site*, Richland, Washington, DOE/RL-88-32, Rev. 1, U.S. Department of Energy, Richland Operations Office, Richland, Washington.

DOE-RL, 1992, *T Plant Source Aggregate Area Management Study Report*, DOE/RL-91-61, Rev. 0, U.S. Department of Energy, Richland Operations Office, Richland, Washington.

DOE-RL, 1993, *200 West Groundwater Aggregate Area Management Study Report*, DOE/RL-92-16, Rev. 0, U.S. Department of Energy, Richland Operations Office, Richland, Washington.

DOE-RL, 1995, *Limited Field Investigation Report for the 200-UP-2 Operable Unit*, DOE/RL-95-13, Draft A, U.S. Department of Energy, Richland Operations Office, Richland, Washington.

DOE-RL, 1996, *200-BP-5 Operable Unit Treatability Test Report*, DOE/RL-95-59, Rev. 0, U.S. Department of Energy, Richland Operations Office, Richland, Washington.

DOE-RL, 1998, *Information on Hanford Site Cribs and Septic Systems*, DOE/RL-88-19, Rev. 0, U.S. Department of Energy, Richland Operations Office, Richland, Washington.

DOE-RL, 2001, *200-PW-2 Uranium Rich Process Waste Group Operable Unit RI/FS Work Plan and Process Waste RCRA TSD Unit Sampling Plan*, DOE/RL-2000-60, Rev. 0, U.S. Department of Energy, Richland Operations Office, Richland, Washington.

Doud, E., 1964, *200 Areas Disposal Sites for Radioactive Liquid Wastes*, HW-83718, General Electric Company, Hanford Atomic Products Operation, Richland, Washington.

Freeman-Pollard, J. R, 1994, *Engineering Study of 50 Miscellaneous Inactive Underground Radioactive Waste Tanks Located at the Hanford Site, Washington*, WHC-SD-EN-ES-040, Rev. 0, Westinghouse Hanford Company, Richland, Washington.

GE, 1955, *PUREX Technical Manual*, HW-31000, General Electric Company, Richland, Washington.

Hanlon, B. M., 1991, *Tank Farm Surveillance and Waste Status Report for September 1991*, WHC-EP-0182-42, Westinghouse Hanford Company, Richland, Washington.

Hanlon, B. M., 1996, *Waste Tank Summary Report for Month Ending June 30, 1996*, WHC-EP-0182-99, Westinghouse Hanford Company, Richland, Washington.

Harlow, D. G., 1974, *Disposition and Isolation of Tanks 241-B-361, 241-T-361, 241-U-361, 205-S-SG-2 (Tank and Sump), and 205-S-SG-1*, letter to J. A. Teal, dated July 31, 1974, Richland, Washington.

Healy, J. W., 1953, *Release of Radioactive Wastes to Ground*, HW-28121, Rev. 0, General Electric Company, Hanford Atomic Products Operation, Richland, Washington.

Horton, J. E., 1974, *Laboratory Notebook for Waste Management – Sludging and Sluicing*, ARH-N-314, Atlantic Richfield Hanford Company, Richland Washington.

Horton, J. E., 1976a, *Analysis and Characterization of 361-B Tank Sludge*, MEM-111676 to W. R. Christensen, dated November 16, 1976, Atlantic Richfield Hanford Company, Richland, Washington.

Horton, J. E., 1976b, *Analysis of 361-U Tank Sludge*, MEM-111776 to W. R. Christensen, dated November 17, 1976, Atlantic Richfield Hanford Company, Richland, Washington.

Horton, J. E., 1977a, *Analysis of Tank 361-T Sludge*, ARHC-021677, memorandum to W. R. Christensen, dated February 16, 1977, Atlantic Richfield Hanford Company, Richland, Washington.

Horton, J. E., 1977b, *Engineering Assistance Waste Concentration*, letter to D. C. Lini, dated June 1977, Richland, Washington.

Horton, J. E., 1979, *Characterization of Tank 361-B*, letter to J. E. Mirabella, dated July 23,1979, Rockwell Hanford Operations, Richland, Washington.

Kerr, N. R., 1992, *Safety Assessment for 200-BP-1, Task 4*, WHC-SD-EN-HC-004, Rev. 0B, Westinghouse Hanford Company, Richland, Washington.

Lane, T. A., 1977, *Diatomaceous Earth Addition to Tank 361-T*, letter to J. E. Mirabella, dated July 25, 1977, Rockwell Hanford Operations, Richland, Washington.

Maxfield, H. L., 1979, *Handbook of 200 Areas Wastes Sites*, RHO-CD-673, Rockwell Hanford Operations, Richland, Washington.

McCain, D. J., 1998, *Tank Characterization Report to Single-Shell Tank 241-T-112*, HNF-SD-WM-ER-699, Rev. 1, Lockheed Martin Hanford Corporation, Richland, Washington.

Meacham, J. E., R. J. Cash, D. R. Dickinson, J. M. Grisby, M. A. Lilga, A. K. Postma, and F. R. Reish, 1996, *Assessment of the Potential for Ferrocyanide Propagating Reaction Accidents*, WHC-SD-WM-SARR-038, Rev. 1, Westinghouse Hanford Company, Richland, Washington.

Neilsen, E. H., 1992, *Miscellaneous Underground Radioactive Waste Tanks*, WHC-EP-0560, Rev. 0, Westinghouse Hanford Company, Richland, Washington.

Powers, T. B., 1995, *Status Report for Inactive Miscellaneous Underground Storage Tanks at Hanford Site 200 Areas*, WHC-EP-0861, Rev. 0, Westinghouse Hanford Company, Richland, Washington.

RHO, 1982, *Rockwell Retired Contaminated Facility Listing and Description*, SD-DD-FL-001, Rockwell Hanford Operations, Richland, Washington.

RHO, 1984, *Long-Range Decommissioning Plan for Rockwell Hanford Operations Surplus Facilities Management Program*, RHO-WM-PL-10, Rev. 0, Rockwell Hanford Operations, Richland, Washington.

RHO, 1985, *Hanford Defense Waste Disposal Alternatives: Engineering Support Data for the Hanford Defense Waste-Environmental Impact Statement*, RHO-RE-ST-30 P, Rockwell Hanford Operations, Richland, Washington.

Rhoads, P. G., 1947, *Determination of Sludge Depths in Tanks 241-T 361 and 241-T 201 and Check On Depth of 241-T 361 Well,* HW-7775, letter to S. D. Smiley, dated October 8, 1947, Richland, Washington.

Ruppert, H. G., and K. R. Heid, 1954, *Summary of Liquid Radioactive Wastes Discharged to the Ground – 200 Areas July 1952 through June 1954*, HW-33591, Rev. 0, General Electric Company, Hanford Atomic Products Operation, Richland, Washington.

Rymarz, P. B., and D. R. Speer, 1991, *Summary of Radioactive Underground Tanks Managed by Hanford Restoration Operations*, WHC-SD-DD-TI-057, Rev. 0, Westinghouse Hanford Company, Richland, Washington.

Smith, D. L., 1992, *216-U-1 and 216-U-2 Cribs Interim Stabilization Final Report*, WHC-SD-DD-TI-063, Rev. 0, Westinghouse Hanford Company, Richland, Washington.

Smith, R. M., 1980, *216-B-5 Reverse Well Characterization Study*, RHO-ST-37, Rockwell Hanford Operations, Richland, Washington.

Stalos, S., and C. M. Walker (editors), 1987, *Waste Storage Tank Status and Leak Detection Criteria*, RHO-CD-213, Rockwell Hanford Operations, Richland, Washington.

Stenner, R. D., K. H. Kramer, and K. A. Higley, 1988, *Hazard Ranking System Evaluation of CERCLA Inactive Waste Sites at Hanford*, PNL-6456, Pacific Northwest Laboratory, Richland, Washington.

Stickney, R. G., and E. J. Lipke, 1998, *Authorization Basis Status Report (Miscellaneous TWRS Facilities, Tanks and Components)*, HNF-2503, Rev. 0, Duke Engineering and Services Hanford, Inc., Richland, Washington.

Wang, O. S., and T. B. Powers, 1994, *Safety Issue Resolution Strategy Plan for Inactive Miscellaneous Underground Storage Tanks*, WHC-EP-0775, Westinghouse Hanford Company, Richland, Washington.

Welty, R. K., 1988, *Waste Storage Tank Status & Leak Detection Criteria*, SD-WM-TI-356, Westinghouse Hanford Company, Richland, Washington.

WHC, 1987, *Estimates of Solid Waste Buried in 100 Area Burial Grounds*, WHC-EP-0620, Westinghouse Hanford Company, Richland, Washington.

WHC, 1990, *Westinghouse Hanford Company Effluent Discharges and Solid Waste Management Report for Calendar Year 1989: 200/600 Areas*, WHC-EP-0141-2, Westinghouse Hanford Company, Richland, Washington.

DISTRIBUTION

U.S. Department of Energy
Richland Operations Office

B.L. Foley	A6-38
J. D. Goodenough	A3-04
B. A. Ruhlman	A6-39
S. S. Seth	A5-11
P. J. Valcich	S4-49

ERC Team

D. R. Byers, BHI	R4-03
J. D. Condron, BHI	R4-03
L. R. Curry, BHI	H0-09
L. M. Dittmer, BHI	H0-19
R. G. Egge, BHI	R4-03
K. R. Fecht, BHI	H0-02
J. W. Golden, BHI	R4-02
W. M. Hayward, BHI	T7-05
N. R. Kerr, BHI	R4-03
S. P. Kretzschmar, BHI	R4-03
J. J. McGuire, BHI	R4-02
A. M. Nazarali, BHI	H9-02
W. L. Osborne, BHI	T7-05
R. G. Shuck, BHI	T7-05
S. R. Turney, BHI	R4-03
P. J. Woods, BHI	R4-02

Fluor Hanford

R. W. Bailey	S4-49
J. D. Williams	H8-20

200-E Library	R4-02
200-W Library	T7-05
Document and Information Services (3)	H0-09
DOE-RL Public Reading Room	H2-53
Hanford Technical Library	P8-55