RHO-RE-ST-30 ADD P

0003003

Engineering Support Data Update for the Hanford Defense Waste-Environmental Impact Statement

February 1987

Waste Management Systems Engineering Department

Prepared for the U.S. Department of Energy
under Contract DE-AC06-77RL01030

Rockwell International

Rockwell Hanford Operations
Richland, Washington

DISCLAIMER

This report was prepared as an account of work sponsored by an agency of the United States Government. Neither the United States Government nor any agency thereof, nor any of their employees, makes any warranty, express or implied, or assumes any legal liability or responsibility for the accuracy, completeness, or usefulness of any information, apparatus, product, or process disclosed, or represents that its use would not infringe privately owned rights. Reference herein to any specific commercial product, process, or service by trade name, trademark, manufacturer, or otherwise, does not necessarily constitute or imply its endorsement, recommendation, or favoring by the United States Government or any agency thereof. The views and opinions of authors expressed herein do not necessarily state or reflect those of the United States Government or any agency thereof.

Printed in the United States of America

Available from
National Technical Information Service
U. S. Department of Commerce
5285 Port Royal Road
Springfield, VA 22161

NTIS Price Codes
Microfiche Copy: A01

Printed Copy:

Pages	Price Codes
001-025	A02
026-050	A03
051-075	A04
076-100	A05
101-125	A06
126-150	A07
151-175	A08
176-200	A09
201-225	A10
226-250	A11
251-275	A12
276-300	A13

BD-9300-090.1 (R-7-83)

0003003

RHO-RE-ST-30 ADD P

Engineering Support Data Update for the Hanford Defense Waste-Environmental Impact Statement

February 1987

Waste Management Systems Engineering Department
Research and Engineering

Prepared for the U.S. Department of Energy
under Contract DE-AC06-77RL01030

Rockwell International
Rockwell Hanford Operations
P.O. Box 800
Richland, Washington 99352

ABSTRACT

This document provides updated engineering support data for development of an environmental impact statement for Hanford defense, high-level, transuranic, and tank wastes. This document should be used in conjunction with the original engineering support data entitled Hanford Defense Waste Disposal Alternatives: Engineering Support Data for the Hanford Defense Waste - Environmental Impact Statement. The updated data are intended to reflect data and information gathered since 1983, and are current to January 1987. Updated data include inventories, site descriptions, engineering methodologies for retrieval of single-shell tank waste, and facilities descriptions and costs. Errata for the original engineering data is also included as an appendix.

CONTENTS

1.0 Introduction 1
1.1 Purpose and Scope 1
1.2 Background 1

2.0 Sites and Inventories 3
2.1 Pre-1970 TRU Buried Solid Waste Sites 3
2.2 Single-Shell Tank Waste Characterization 3
2.3 Organic Constituents in Hanford Site Waste 6

3.0 Engineering Methodology 9
3.1 Retrieval of Single-Shell Tank Waste 9
3.2 Transuranic Extraction Processing 11

4.0 Engineering Data 12
4.1 Cost Impacts 12
4.2 Facilities Descriptions and Costs 13
4.2.1 Hanford Waste Vitrification Plant 13
4.2.2 Transportable Grout Facility 15
4.2.3 Waste Receiving and Processing Facility Costs 19
4.3 Selective Single-Shell Tank Retrieval 20

5.0 References 22

Appendix:
A. Errata for RHO-RE-ST-30 P A-1

Figures:
1. Hanford Waste Vitrification Plant 14
2. Flow From Transportable Grout Equipment to Disposal Site 16
3. Grout Disposal Vault 18

Tables:
1. Pre-1970 Transuranic Buried Solid-Waste Site Data 4
2. Organics Identified in Neutralized Cladding Removal Waste and Double-Shell Slurry Wastes 7
3. Organics Identified in Organic Complexant Waste 8
4. Summary Cost Changes 13
5. Costs for Grouting Double-Shell Tank Wastes 17
6. Additional Costs for Grouting Single-Shell Tank Wastes 19
7. Costs for the Waste Receiving and Processing Facility 19
8. Selective Retrieval of Single-Shell Tank Wastes 20
9. Selective Retrieval of Single-Shell Tank Wastes 21

1.0 INTRODUCTION

1.1 PURPOSE AND SCOPE

This document provides the updated engineering support data to be used by Pacific Northwest Laboratory (PNL) in preparing the Final Environmental Impact Statement: Disposal of Hanford Defense High-Level, Transuranic, and Tank Wastes (HDW-EIS). This document should be used in conjunction with the original engineering support data, Hanford Defense Waste Disposal Alternatives: Engineering Support Data for the Hanford Defense Waste-Environmental Impact Statement, RHO-RE-ST-30 P (Rockwell 1985).

The U.S. Department of Energy-Richland Operations Office (DOE-RL) requested that Rockwell Hanford Operations (Rockwell) provide the following support data:

- Information on the various waste classifications included in the scope of the HDW-EIS
- Descriptions of feasible engineering methodologies to accompany the various waste management alternatives
- Associated raw data on manpower, resource, and economic impacts.

Pacific Northwest Laboratory will use this information to generate accident scenarios, dose estimates, risk assessments, and socioeconomic analyses for the HDW-EIS.

Technical engineering support data used to prepare the draft HDW-EIS (DOE 1986a) are contained in RHO-RE-ST-30 P, and at the time of publication, the necessary numerical data were as accurate as possible. Since then, additional research and characterization and public comments requesting additional information have led to the additional data on defense waste and disposal technologies provided in this addendum. These data are current through January 1987.

1.2 BACKGROUND

On April 1, 1983, the official Notice of Intent (NOI) to prepare the HDW-EIS appeared in the Federal Register. Subsequent to publication of the NOI, a detailed outline was prepared by PNL and approved by the U.S. Department of Energy-Headquarters (DOE-HQ). The NOI called for evaluation of three alternatives: geologic disposal, onsite stabilization and isolation, and continued storage (no action). The detailed outline introduced another alternative entitled the reference alternative. The waste management strategy of each alternative was fully discussed in chapter 3.0 of the draft HDW-EIS.

The inventories and site descriptions provided in chapter 2 of this addendum are intended to reflect data obtained since 1983. Recent waste tank characterization data and computer modeling of the tank waste composition indicate that tank waste data presented in RHO-RE-ST-30 P are bounding; that is, the data are conservatively high when compared to field data (Rockwell 1986). Also, a Comprehensive Environmental Response, Compensation, and Liability Act (CERCLA) study concluded that two solid-waste burial sites previously thought to be transuranic (TRU) are actually low-level waste sites (DOE 1986b). Again, the RHO-RE-ST-30 P data are bounding in terms of potential impacts. Data from recent laboratory studies aimed at identifying organic constituents in the waste are also included.

Chapter 3 contains brief descriptions of updated engineering methodologies for waste retrieval and processing. Chapter 4 discusses updated engineering data (specifically, facility descriptions and cost updates) as well as partial retrieval of single-shell tanks (SST). Partial retrieval was added as a result of public and agency comments or concerns.

2.0 SITES AND INVENTORIES

The management of Hanford Defense Waste requires development of the technology and methods for permanent waste disposal. Additional development of defensible numerical analysis techniques used in evaluating and selecting appropriate process steps to implement disposal alternatives is also required. Numerical analyses and computer-model predictions for source-term data are the only means available to evaluate the effectiveness of some disposal systems because of the required lengthy waste isolation periods (10,000 yr). Characterization, prior to final disposal decisions, is a development area common to all waste categories. This chapter gives updated data on sites and inventories for pre-1970 TRU buried solid waste sites.

2.1 PRE-1970 TRU BURIED SOLID WASTE SITES

The pre-1970 TRU buried solid waste sites must be characterized prior to emplacement of engineered barriers for the following reasons:

- To estimate the potential for undesirable site subsidence and to provide data for developing cost-effective stabilization
- To support safety analyses and performance assessments
- To comply with applicable laws and regulations
- To address effluent and environmental control concerns
- To confirm the existence of a TRU buried solid waste site
- To validate some sites and reclassify others.

Table 1 reflects a change in the Hanford Site inventory of pre-1970 TRU buried solid-waste sites. There are currently nine sites categorized as pre-1970 TRU buried solid-waste sites. The draft HDW-EIS listed these nine sites, as well as two other sites that were outside the 200 Areas (618-1 and 618-2). A recently completed study (DOE 1986b), which examined records of inactive waste disposal locations on the Hanford Site, showed that the two 618 sites mentioned above each contained 1.0 g of plutonium, rather than the previously listed 1,000 g (Rockwell 1985). As a result of this lower quantity, both sites are now designated as low-level waste. No additional sites were found to contain TRU quantities that would place them in the pre-1970 TRU buried solid-waste site category.

2.2 SINGLE-SHELL TANK WASTE CHARACTERIZATION

Single-shell tank waste characterization includes the development of a plan to assemble and validate existing characterization data and to acquire additional data as required. The waste characterization data will be used to form a data base for the SST wastes.

Table 1. Pre-1970 Transuranic Buried Solid-Waste Site Data.

Site	Area overlying waste zone (m^2)	Overburden volume (m^3)	Waste volume[a] (m^3)	Plutonium (g)	Transuranic elements	
					(Ci)	(nCi/g)
200 West Area						
218-W-1	6,500	7,400	9,000	94,000	9,000	560
218-W-2	15,000	24,000	23,000	130,000	12,000	290
218-W-3	16,000	55,000	25,000	68,000	6,500	140
218-W-4B	5,500	23,000	6,800	9,900	950	78
218-W-4A	20,000	80,000	25,000	35,000	3,400	76
200 East Area						
218-E-1	2,500	8,200	3,000	900	86	16
218-E-5A	960	1,300	2,200	1,400	130	34
218-E-12B	3,400	7,700	4,400	1,200	110	14
Outside of the 200 Area[b]						
618-11	3,100	18,000	7,900	10,000	960	68
Totals	73,000	220,000	110,000	350,000	33,000	--

NOTE: All data are given to two significant figures. Transuranic concentration includes maximum ^{241}Am buildup.

[a]Volume of waste and associated contaminated soil.

[b]As a result of a CERCLA study, two sites (618-1 and 618-2) were found to contain gram quantities of plutonium. Therefore, they have been deleted as pre-1970 transuranic buried solid-waste sites. This table supersedes table 2-20 in RHO-RE-ST-30 P.

Two methods of characterization are currently being pursued: (1) simulation modeling and (2) sampling and analysis. The computer simulation model, Track Radioactive Components (TRAC), is used to estimate the total waste inventory and the distribution of waste components among tanks (Rockwell 1985). Core-sampling equipment, which is used to take waste samples from the SSTs while maintaining the waste layers, has been demonstrated. Data from both methods will be used to characterize the waste in the tanks. Wastes from nine of 149 SSTs in 3 of 12 tank farms have now been sampled and analyzed for comparison with TRAC model inventory predictions. Six key, environmentally important radionuclides (^{14}C, ^{129}I, ^{99}Tc, ^{239}Pu, ^{240}Pu, and ^{241}Am) from waste cores in each of the tanks have been analyzed. The nine tanks chosen for sampling were selected on the basis of TRAC model predictions indicating that significant amounts of the key radionuclides are present. For individual key radionuclides, the preliminary analysis results from these nine SSTs are discussed below. Continued sampling will be used to verify the inventory and location of the waste constituents.

- Carbon-14 and iodine-129. Inventories of ^{14}C and ^{129}I found in the nine SSTs sampled to date are significantly less (by factors of 1,000 and 10, respectively) than predicted by the TRAC model. This result is not surprising, because the TRAC model is anticipated to be a better predictor of insoluble radionuclide locations and amounts than it is of these soluble radionuclides. Moreover, there is a possibility that the actual amounts of ^{14}C and ^{129}I produced at the Hanford Site and initially routed to SSTs were substantially less than those accounted for by the TRAC model.

- Technetium-99. The cumulative inventory of ^{99}Tc found in the nine sampled tanks is only slightly less (factor of 1.3) than that predicted by the TRAC model. Technetium is a soluble radionuclide, and there is reason to believe, as for ^{14}C and ^{129}I, that the amount of ^{99}Tc in SSTs might be less than that predicted by the TRAC model.

- Plutonium-239 and plutonium-240. The TRAC model predicts that tanks in two of the three sampled tank farms contain a large fraction of the $^{239,240}Pu$ inventory expected to be present in the 149 SSTs. Sampling and analysis data for seven of the nine sampled tanks are in accord with this prediction. The actual amount of $^{239,240}Pu$ found in the sampled tanks is about three times as much as predicted by the TRAC model. The limited amount of sampling data is not sufficient to account for the observed difference in plutonium inventories. The two tank farms taken together may contain the approximate amount of plutonium predicted by the TRAC model, but with more plutonium distributed to one farm and less to the other farm than the TRAC model predicted.

- Americium-241. The inventory of ^{241}Am in the nine sampled tanks is about half of that predicted by the TRAC model.

The TRAC-predicted total inventories (not tank-by-tank) are conservative in the sense that TRAC generally overpredicts the amount of radionuclides. Overprediction is conservative, from a performance assessment point of view, because the environmental consequences for the estimated value would be worse than for the sample (observed) inventories. Thus, the data presented in RHO-RE-ST-30 P are conservative, preserving the bounding analysis developed in the draft HDW-EIS.

2.3 ORGANIC CONSTITUENTS IN HANFORD SITE WASTE

Ongoing efforts to characterize radioactive waste have included laboratory studies to identify organic constituents in the waste. The existing tank waste contains a number of organic compounds that were used by the Hanford Site chemical processing facilities. Due to the thermal and radiolytic history of the waste, it is likely that a significant fraction of the organic materials may have volatilized, decomposed, or polymerized.

Most of the organic compounds in the waste were introduced as chelating agents as a result of strontium recovery processing at B Plant. The chelating agents used by B Plant are hydroxyacetic acid, citric acid, hydroxyethylethylenediaminetriacetic acid (HEDTA) and ethylenediaminetetraacetic acid (EDTA). These compounds were used in approximately the following respective ratios: 25, 25, 40, and 10 wt%. Small amounts of these compounds may be found in multiple waste streams due to residuals after tank-to-tank transfers. Most of these organics and their degradation products are found in organic complexant waste.

Many of the chemical separation processes are based on extraction of the desired species from an aqueous solution by an organic solvent. Thus trace quantities of organic solvents are present in the wastes. Organic solvents previously used or in use at the Hanford Site include di-(2-ethyl hexyl) phosphoric acid, hexone, tributyl phosphate, normal paraffin hydrocarbon (kerosene), and carbon tetrachloride.

Sodium gluconate was introduced into the waste by the B Plant solvent cleanup process. Sugar (sucrose) is used by PUREX for nitric acid destruction. Most of the sugar is decomposed by this process.

Recent analytical data have revealed that a large volume of organics has indeed decomposed or polymerized. Preliminary data, presented in table 2, show that in a sample of neutralized cladding removal waste (NCRW), 95 wt% of the organic carbon present in the waste can be identified. The NCRW does not normally contain organics. The presence of organics in this sample was due to residual waste in the tank prior to the addition of the NCRW. However, analyses of double-shell slurry (DSS) can identify only 1 wt% of the organic carbon present. Future laboratory work will investigate postulated polymeric compounds present in DSS. Preliminary analytical data on organic complexant waste, as shown in table 3, allow 75 wt% of the organics present to be identified.

Table 2. Organics Identified in Neutralized Cladding Removal Waste and Double-Shell Slurry Wastes.

Organics	Neutralized cladding removal waste	Double-shell slurry wastes
	Carbon concentration in waste (µg/g)	Carbon concentration in waste (µg/g)
Solvent extractable		
Tri-n-butylphosphate	380	7
n-Undecane		<1
n-Dodecane	87	2
n-Tridecane	430	8
n-Tetradecane	390	4
n-Pentadecane		2
n-$C_{22}H_{46}$--n-$C_{34}H_{70}$		
Butylbenzylphthalate		
Dioctylphthalate	24	5
Unknown phthalates		
Volatile		
Acetone		
Methylene chloride		
Chloroform		
Unknown (mol wt. 75 or 76)		
Chelating complexing agents		
Citric acid	130	8
Ethylenediaminetetraacetic acid (EDTA)	170	22
Nitrilotriacetic acid (NTA)		2
Chelator fragments		
Methanetricarboxylic acid	64	1
Ethylenediaminetriacetic acid (ED3A)		1
Carboxylic acids		
Pentanedioic acid	130	
Hexanedioic	610	
Heptanedioic acid	330	
Octanedioic acid	1,000	
Nonanedioic acid	580	
Undecanoic acid		
Pentadecanoic acid	280	6
Heptadecanoic acid	310	2
Total organic carbon	5,200	5,900
Percent total organic carbon identified	95%	1%

NOTE: No entry indicates compound is below detection level. Exact contributions of unknown organics to waste total organic carbon content cannot be determined unequivocally. Total organic carbon analysis performed by combustion with coulometric titration.

GS87-3130-2

Table 3. Organics Identified in Organic Complexant Waste.

Organics	Carbon Concentration in Waste (µg/g)
Chelating/complexing agents	
Citric acid	3,800
N-(2-Hydroxyethyl)ethylenediaminetriacetic acid (HEDTA)	3,800
Ethylenediaminetetraacetic acid (EDTA)	3,100
Methane Tricarboxylic acid	1,200
Nitrilotriacetic acid (NTA)	440
Chelator fragments	
Ethylenediaminetriacetic acid (ED3A)	1,400
N-(2-Hydroxyethyl)ethylenediamine-N'N'-diacetic acid (HEDDA)	220
N-(ethylene)ethylenediaminetriacetic acid (E_2DTA)	190
N-(2-Hydroxyethyl)iminodiacetic acid (HEIDA)	150
N-(2-Hydroxyethyl)-N'-(methyl)ethylenediamine-'N,N'-diacetic acid (MeHEDDA'A)	170
N-(methyl)ethylenediamine-N,N'-diacetic acid (MeEDD'A)	70
Iminodiacetic acid (IDA)	9,100
Molecular weight (mol. wt.) species[a]	
A: mol. wt. 122	30
F: mol. wt. 173	20
J: mol. wt. 247	70
Carboxylic acids	
Docos-13en-oic acid	560
Hexanedioic acid	130
Hexadecanoic acid	330
Phthalic acid	80
Nonanedioic acid	60
Tetradecanoic acid	100
Pentanedioic acid	30
Octadecanoic acid	90
Hydroxybutanedioic acid	8
Butanedioic acid	8
Alkanes	
nC_{23}-nC_{35}	2,100
Phthalate esters	
Dibutylphthalate	190
Dioctylphthalate	8
Total organic carbon	37,000
Percent total organic identified	75%

[a]Molecular weights assigned to unknown chelator fragments on the basis of electron impact (70 eV) gas chromatograph-mass spectrometer.

PST87-3130-3

3.0 ENGINEERING METHODOLOGY

Waste retrieval and waste processing data were presented in RHO-RE-ST-30 P, appendix A. For retrieval of SST waste, mechanical retrieval was proposed for cost-estimate and resource-requirement purposes. Section 3.1 of this addendum offers an explanation for the choice of mechanical retrieval over other alternative methods (i.e., hydraulic retrieval or combined mechanical/hydraulic retrieval). Section 3.2 pertains to a recently developed solvent extraction waste preprocessing technique, which may be applicable to some Hanford Site wastes. This technique could dramatically reduce the volume of glass produced in either the Reference or Geologic Disposal alternatives.

3.1 RETRIEVAL OF SINGLE-SHELL TANK WASTE

In RHO-RE-ST-30 P, a waterless mechanical waste retrieval technique was assumed for retrieval of SST wastes. If visual inspection (by remote video) or the presence of drainable liquid indicated that the tank was sound, hydraulic sluicing would be presented as an alternative to complete cleanup of the tank. This section includes a review of the selection of waterless mechanical retrieval and of alternative retrieval methods. Prior to selection of a retrieval system for SST wastes, the National Academy of Sciences (NAS) will be asked to review all alternatives. In addition, the NAS will be asked to review state-of-the-art retrieval technology to assure that all reasonable alternatives are considered.

Single-shell tank waste retrieval was discussed in Alternatives for Long-Term Management of Defense High-Level Radioactive Waste (ERDA 1977). Mechanical retrieval was presented as the SST waste retrieval technology. Earlier evaluations for SST waste retrieval considered three retrieval systems. The three systems were a waterless mechanical retrieval system, a pumped retrieval system, and a combined (mechanical/pumped) retrieval system. Each of the proposed systems incorporated a pneumatic in-tank cleanup system to remove residual wastes. The concept of a pumped retrieval system was based on techniques used to remove the settled solids typically found in sewage or in uranium-bearing sands. Functional requirements and general criteria were established to evaluate the retrieval systems. The selected retrieval system had to have the capability to retrieve solidified radioactive waste from underground storage tanks, retrieve as close to 100% of the stored waste as practical, process and/or package the retrieved waste for transport to an onsite facility, accomplish the retrieval without destroying the structural integrity of the tanks, and minimize the amount of radioactive material discharged to the environment as a result of the retrieval operations. Elimination of the need to add liquid to the tanks was recognized as an advantage, but was not one of the criteria used in selecting the mechanical retrieval concept.

In addition to the three waste retrieval systems initially evaluated, other waste retrieval technologies have been proposed or have been used under other somewhat similar conditions. These techniques, described in the following paragraphs, will also be proposed to the NAS for consideration.

Hydraulic sluicing of tanks has been successfully performed at both the Hanford Site and at the Savannah River Plant. As a part of byproduct recovery efforts, the Hanford Site used a high-pressure sluicer and multistage pump to transfer material through direct-buried pipelines to vaults and then to B Plant for the recovery of strontium from the high-level waste sludges. This process is described in RHO-RE-ST-30 P as applied to the retrieval of double-shell tank (DST) wastes. Savannah River Plant operations have used in-tank mixers and multistage turbine pumps to resuspend solids and transfer wastes from older to newer tanks. Water sluicing is expected to remove up to 99.95% of the residual wastes from a sound tank. However, less efficient waste removal may be expected due to past leaks and the probability of leaks during recovery processing. There is a risk that liquid could leak out of tanks during this process.

A variation of hydraulic sluicing combines the use of high-pressure water jets with pneumatic retrieval. Sluicing is confined within a chamber placed over the material to be sluiced. The slurry created within the chamber is removed pneumatically. Low-flow, high-pressure jets within the chamber deliver liquid for sluicing, minimizing the amount of liquid that is added or is present in the tank. This process reduces the potential for leaks. A similar technique has been developed to support decontamination and decommissioning efforts, and several commercial sluicing devices are available for modification. All of these devices would require some modification to work in SSTs. The sluicing module would require an articulated arm similar to the device discussed in appendix A of RHO-RE-ST-30 P. Access to various areas of the tank would be hampered by in-tank obstructions such as air-lift circulators.

A second minimal sluicing technique is limited sluicing. This system employs a sluicer jet that is separate from the retrieval pump. Liquid use is limited by positioning the jet as close to the waste as possible. A slurry pool is formed at the pump, and the process continues from the center of the tank outward to the walls. This technique uses the unsluiced waste as a dam to minimize leaks. Again, an articulated arm may be necessary to position the sluicing jets and the pump.

Mechanical retrieval was presented as the method of SST waste retrieval based on engineering studies and independent consultant reviews. Waterless mechanical retrieval also removes the potential for any additional leakage from the tanks due to retrieval operations. A detailed description of this system is in RHO-RE-ST-30 P, appendix A. Because many of the SSTs have leaked and additional tanks may leak in the decades before retrieval is completed, the use of a mechanical recovery system was deemed appropriate for retrieval of the wastes in order "to not add more water to the single-shell tanks" (ERDA 1977). The use of pumped retrieval was questioned due to uncertainty that the retrieval systems would be capable of removing dense saltcake, sludge, or hard crystallized deposits in the presence of in-tank obstructions and debris. Mechanical retrieval is conservatively estimated to remove at least 95% of the wastes. Because the 95% value is considered to be conservative for these systems, it represents the upper limit of radiological risks during recovery operations; thus, it was selected as the bounding case evaluated in RHO-RE-ST-30 P and the draft HDW-EIS. The total

cost of recovery of wastes is slightly higher for mechanical retrieval than it is for sluicing. Mechanical retrieval costs are less than six percent of the total disposal costs for SSTs, while the cost of recovery of wastes using confined sluicing, for example, would be about two percent of the total disposal costs for SSTs. Hence, the cost of the process chosen would not affect the overall decisions regarding SST waste retrieval.

3.2 TRANSURANIC EXTRACTION PROCESSING

Several waste streams currently stored in DSTs will require intermediate processing before they are acceptable as feed to the grout and glass processes (DOE-RL 1986a). The processing would involve extracting the TRU elements from solution and then separating and washing the existing solids. If the TRU-bearing solids would be made into glass, the glass volume would be reduced. The volume of glass could be further reduced by dissolving the solids in acid and separating the TRU by solvent extraction. Recent technological developments have indicated that the transuranic extraction (TRUEX) process is a promising solvent extraction technique. The TRUEX process uses the bifunctional extractant octyl(phenyl)-N,N-diisobutyl-carbamoylmethylphosphine oxide (CMPO). With this extractant, enough TRU elements might be removed from the dissolved solids to make it low-level waste (<100 nCi/g). The low-level waste, which would be the bulk of the product, could then be grouted and placed in shallow land-burial sites.

Preliminary engineering assessments of laboratory data indicate that incorporation of the TRUEX process at the Hanford Site could dramatically reduce, almost by a factor of four, the volume of glass that would be produced as described in the Reference alternative. Should the SST waste be retrieved (Geologic Disposal alternative), the TRUEX process might reduce the volume of glass produced by a factor of three compared to using the radionuclide removal process if TRUEX is found to be appropriate for the waste. Relative costs would be reduced as well, although not necessarily in the same magnitudes.

Applicability of the TRUEX process will be based on results of technical feasibility and performance assessment analyses. Performance assessment is the analysis that evaluates the potential long-term isolation of a waste disposal system.

The TRUEX process may be used alone or with additional processes to provide a radionuclide disposition in the grout or glass that would cause minimal environmental impact. Use of the TRUEX process may allow large volumes of waste to be disposed of near the surface, because it substantially reduces the TRU activity of the wastes. However, the predicted performance of waste forms must be compared against pre-established criteria and standards. Other processes, including sludge washing and radionuclide removal, will be considered. These processes may be used in conjunction with the TRUEX process if necessary, removing additional radionuclides so that environmental impacts can be minimized and applicable standards for near-surface disposal can be met.

4.0 ENGINEERING DATA

4.1 COST IMPACTS

Three major items have changed since December 1985 with respect to costs. These are the facility costs associated with the Hanford Waste Vitrification Plant (HWVP), the costs to dispose of grout, and the repository fee per canister of waste.

The capital costs of HWVP went up approximately 30%, due to inflation and design changes. Design changes center around a larger size melter with associated equipment and increased storage capacity. Details are provided in section 4.2.1.

The grout costs have increased by about a factor of five. This increase is in response to State and public comments to ensure greater containment. Changes include adding a reinforced concrete vault, two Resource Conservation and Recovery Act (RCRA) liners, and a RCRA-style barrier in addition to the multilayered barrier. Details are provided in section 4.2.2.

The numbers used in the draft HDW-EIS for calculating the required fee per volume of waste disposed of in a deep geologic repository were based on very preliminary repository costs. Since then, there has been an effort underway to establish defense high-level waste disposal fees. This has resulted in a report that presents a perspective on methods to calculate a fee and provides a tentative cost range of $75,000 to $200,000 per canister depending on the approach used (DOE-RL 1986b). In addition, a notice in the Federal Register went out on December 2, 1986, requesting public comment on the proposed fee to be paid (DOE 1986c). The total cost presented in the Federal Register notice, divided by the number of canisters presented in the same notice, calculates to a range of $165,000 to $214,000 per canister. The draft HDW-EIS costs were based on $35,000 to $45,000 per canister. Table 4 summarizes the cost changes for grout and HWVP and for two fee estimates to show the total cost impact of the updates. The upper end is considered the more likely repository fee; hence, the use of the last column in table 4 is recommended.

Note that the cost for the Reference alternative differs from that presented in the Interim Hanford Waste Management Plan (HWMP) (DOE-RL 1986a). The cost presented in the HWMP is $6.5 billion. It includes items not covered in the HDW-EIS such as low-level waste, all required research and development (including characterization), and management and planning. The costs in table 4 cover limited interim operations costs associated with waste management and research and development costs only for the new facilities.

Table 4. Summary Cost Changes.

Alternative	Draft environmental impact statement cost (billions of dollars)	New cost based on $40,000 per canister[a]	New cost based on $150,000 per canister[a]	New cost based on $214,000 per canister[a]
Geologic				
Repository at Hanford	10.6	12.3	14.9	16.5
Repository offsite	11.3	13.0	15.6	17.2
Reference	2.6	3.4	3.6	3.7
Inplace stabilization and disposal	1.9	2.4	2.4	2.4
Continued storage	1.8	1.8	1.8	1.8

NOTE: All costs in FY 1987 dollars.
[a]Updated facilities costs are incorporated.

PST87-3130-4

4.2 FACILITIES DESCRIPTIONS AND COSTS

This section provides updated data regarding facility descriptions and costs. The data complement information found in RHO-RE-ST-30 P, appendix C, which pertains to the Hanford Waste Vitrification Plant (HWVP), Transportable Grout Facility (TGF), and the Waste Receiving and Processing (WRAP) facility.

4.2.1 Hanford Waste Vitrification Plant

This section provides an updated HWVP facility description and updated cost data in support of the Reference alternative.

The purpose of the HWVP is to vitrify, package, and temporarily store existing and future Hanford Site defense high-level and TRU waste prior to geologic disposal. The HWVP will operate for about 10 to 20 yr and will typically process 70 to 150 canisters of vitrified waste per year. The HWVP is similar to the Defense Waste Processing Facility (DWPF) at the Savannah River Plant, but with less capacity and different process waste. The construction cost of the facility is expected to be about $630 million, escalated to the midpoint of design and construction activities (about 1992). The operating cost is estimated to be about $40 million per year in 1987 dollars.

4.2.1.1 Facility Description. The HWVP will vitrify two blended waste feedstreams based on five general categories of waste (as described in appendix C of RHO-RE-ST-30 P).

The HWVP, shown in figure 1 as a preconceptual building arrangement, consists of process cells served by a canyon crane and ancillary systems to remotely process defense waste into a borosilicate glass matrix. The glass

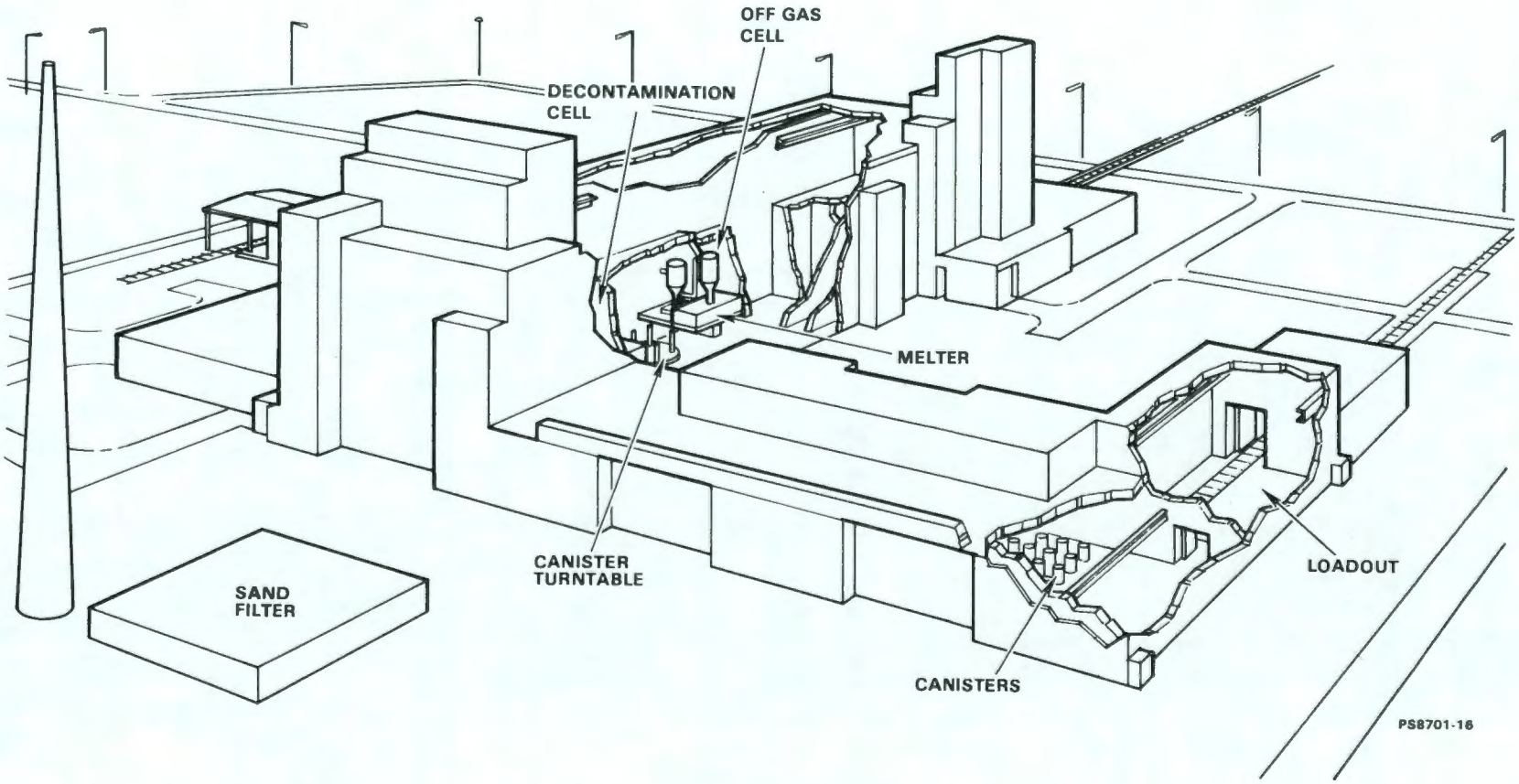

Figure 1. Hanford Waste Vitrification Plant.

will be poured into canisters that will be temporarily stored at the HWVP site. The waste canisters will eventually be transferred from the HWVP to a geologic repository for disposal. The facility is designed around a joule-heated, slurry-fed ceramic melter having a design feed rate of 110 L/h of glass former and radioactive waste slurry with a concentration of 400 g/L glass oxide. The average production rate is 45 kg/h of vitrified waste, with an upward design envelope of 100 kg/h. The current design for facility site is 40 percent larger than the design in the draft HDW-EIS. Factors contributing to the increase include an increased storage capacity (5-yr canister production capacity) and a larger melter size.

Additional details regarding facility description, relationship to other facilities, process description, HWVP waste form, waste feedstreams, resource requirements, and projected radiological and nonradiological emissions are available in appendix C of RHO-RE-ST-30 P.

4.2.1.2 Costs. The total design and construction cost for the HWVP facility is expected to be $630 million, escalated to the midpoint of design and construction activities (about 1992). This cost translates into $490 million in 1987 dollars. (The design and construction costs include a contingency factor that must be removed before further escalations or adjustments are made, and then the contingency factor must be reapplied). The capital equipment (not related to construction) costs are estimated at $25 million in 1987 dollars. Prestartup expenses including technology support and operations expense are estimated to be $225 million in 1987 dollars. The annual operating cost for facility operation is estimated to be $40 million in 1987 dollars.

4.2.2 Transportable Grout Facility

This section provides updates to the TGF, which is currently planned to be used for disposal of designated wastes at the Hanford Site in the Reference alternative described in the draft HDW-EIS.

The purpose of the TGF is to make a grouted waste form of wastes designated for disposal in near-surface disposal sites located in the 200 Areas. A grouted waste slurry would be formed by blending Hanford Site defense liquid wastes with grout-forming solids. The liquid waste would be the low-level fraction in both the Geologic and Reference alternatives. The grout slurry would be pumped into vaults and, possibly, into retired underground waste tanks where it would solidify into large monoliths.

4.2.2.1 Facilities Description. The grout process would involve two new facilities: (1) the Dry Materials Receiving and Handling Facility (DMRHF), where the grout-forming solids would be blended, and (2) the Transportable Grout Equipment (TGE) modules, where the blended solids would be mixed with liquid waste and the resulting slurry pumped to the disposal site (see fig. 2). A dedicated 3,800-m^3 DST would serve as the liquid feed tank for the grout process. These facilities are described in RHO-RE-ST-30 P, appendix C.

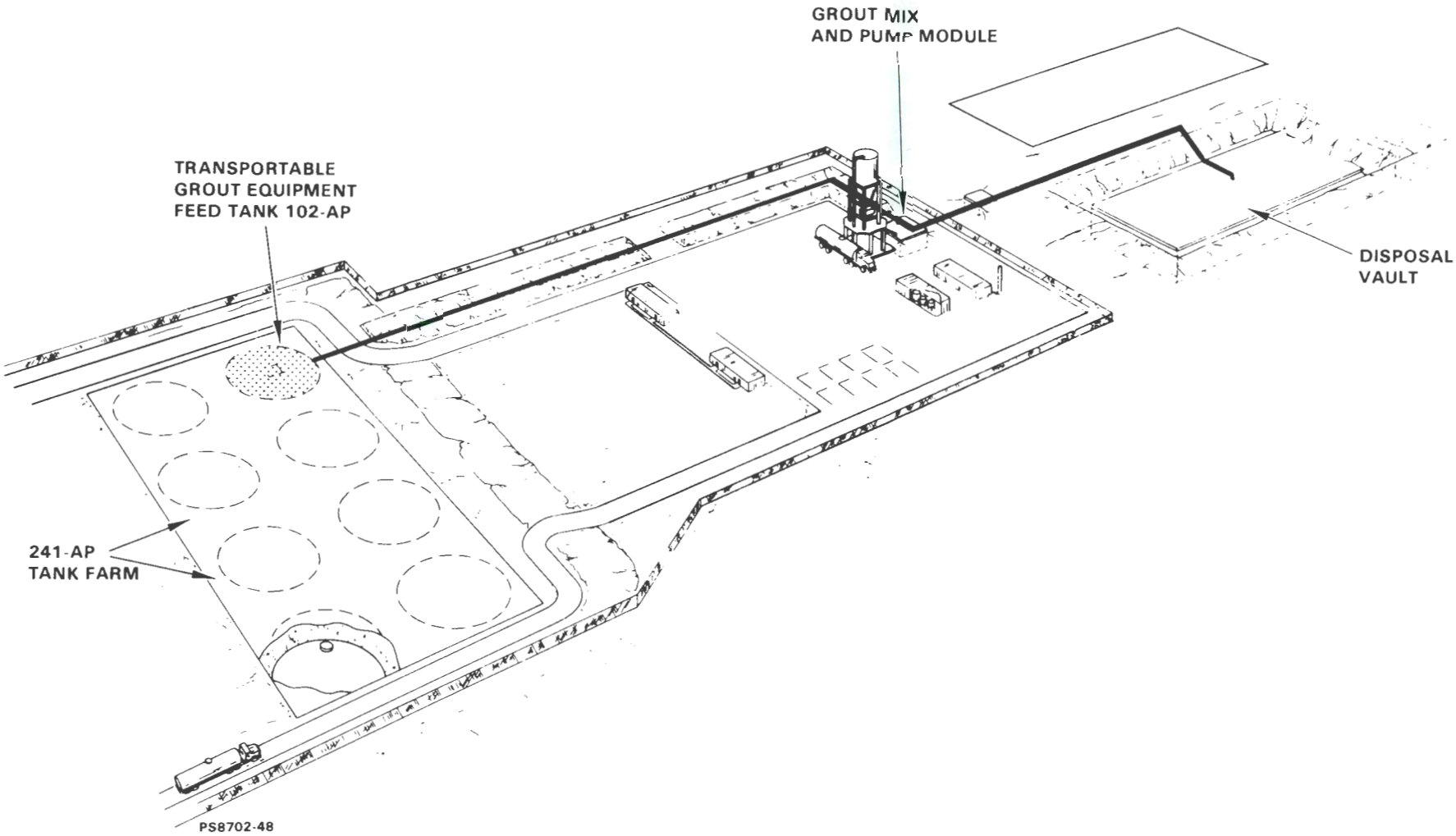

Figure 2. Flow From Transportable Grout Equipment to Disposal Site.

A significant update in the grout disposal process is the use of concrete vaults instead of trenches. The conceptual vault design is shown in figure 3. The vault design, including liner and leachate collection systems, conforms to engineering and scientific provisions of the RCRA and Washington Administrative Code (WAC 173-303) for disposal of hazardous wastes. Negotiations between DOE and the State of Washington will determine whether or not all grouted wastes will require liner and leachate collection systems.

4.2.2.2 Costs. Costs for grouting DST wastes according to the Reference alternative include construction, operation, and decontamination and decommissioning as shown in table 5. The costs associated with grouting are significantly greater than previously estimated in RHO-RE-ST-30 P. The increase is primarily due to the costs of vault construction, compared to the earlier trench design.

Table 5. Costs for Grouting Double-Shell Tank Wastes (Reference alternative).

Phase	Cost[a]
Construction	400
Operation[b]	270
Decontamination and decommissioning	14
Total	680

[a]Cost in millions of 1987 dollars; includes research and development costs plus construction costs for protective barriers. Data apply to the reference alternative. These data supersede table C-2-7 in RHO-RE-ST-30 P.

[b]Research and development costs included.

Costs for grouting only SST wastes are shown in table 6. The data in table 6 are provided to allow a comparison between the Reference and Geologic Disposal alternatives. Again the costs include construction, operation, and decontamination and decommissioning. Changes in grouting requirements delineated for the Reference alternative also apply when estimating costs for grouting SST waste.

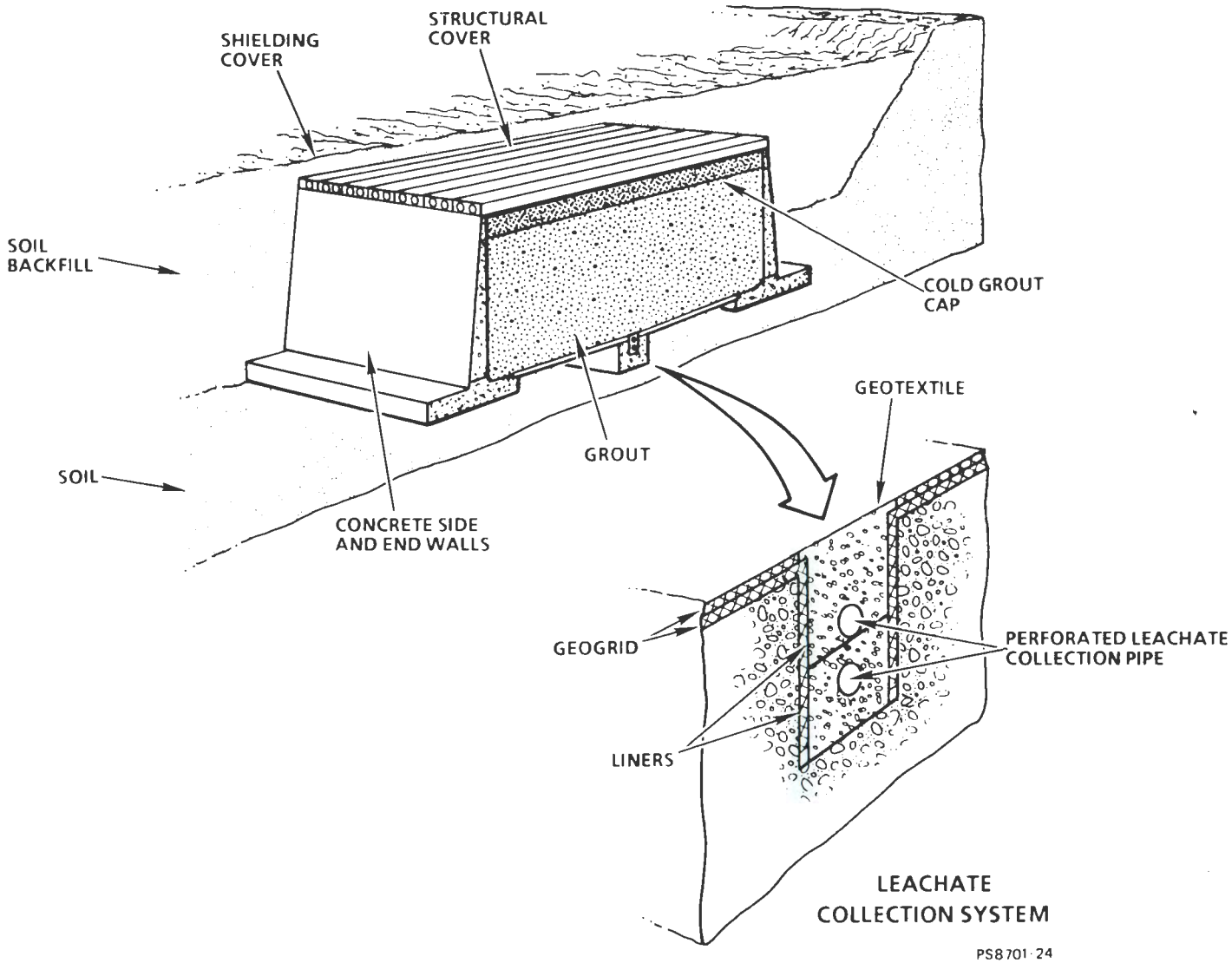

Figure 3. Grout Disposal Vault.

Table 6. Additional Costs for Grouting Single-Shell Tank Wastes.

Phase	Cost
Construction	860
Operation[a]	430
Decontamination and decommissioning	40
Total	1,330

NOTE: Costs in millions of 1987 dollars; includes research and development costs plus construction costs for protective barriers.

[a]Research and development costs included.

4.2.3 Waste Receiving and Processing Facility Costs

The major functions of the WRAP Facility are to inspect, process, package, and certify retrievably stored contact-handled (CH) TRU wastes and to examine and certify newly generated CH-TRU wastes for repository disposal. This section provides updated data regarding the costs of the WRAP Facility. Details regarding facility descriptions, the waste examination, processing, and packaging systems, the flow of materials through the WRAP Facility, the associated waste feedstreams, the resource requirements, and emissions may be found in RHO-RE-ST-30 P, appendix C.

The costs for the WRAP Facility are presented in table 7. The construction costs include the capital costs of constructing the facility. The operations costs through 2006 include shipping and disposal costs and all costs incurred during normal operation and maintenance while retrievably stored and newly generated TRU wastes are being processed.

Table 7. Costs for the Waste Receiving and Processing Facility.

Phase	Cost[a]
Construction	46
Operations	78
Decontamination and decommissioning	9
Total	130

NOTE: Costs in millions of 1987 dollars.

[a]These data supersede table C-3-6 in appendix C of RHO-RE-ST-30 P.

4.3 SELECTIVE SINGLE-SHELL TANK RETRIEVAL

The environmental impacts of partial retrieval of SST waste are bounded by the Geologic Disposal alternative, which evaluated removing all SST wastes, and the Reference alternative, which evaluated leaving all SST waste in place. Partial retrieval of SST waste would be done according to criteria that have not yet been established. Anticipating the possible criteria, two scenarios were examined in which wastes were retrieved based on TRU concentration and based on total TRU inventory. Other criteria such as concentrations of hazardous nonradioactive waste components or amounts of key radionuclides other than TRU elements may also be considered for selection of candidate tanks for retrieval in later studies. To date, the complete identification of hazardous components and their location in the SSTs are not yet available at a level necessary to perform this evaluation.

In the scenario where waste retrieval would be based on TRU concentration, all tanks containing >100 nCi of TRU components per gram of waste would be retrieved. Based on TRAC computer-model radionuclide inventory (Rockwell 1985), a total of 78 tanks contain TRU waste (see table 8).

Table 8. Selective Retrieval of Single-Shell Tank Wastes (Retrieval Based on Transuranic Concentration).

Transuranic concentration used as cutoff (nCi/g)	Number of tanks retrieved	Cost in millions of 1987 dollars
N/A (Geologic alternative)	149	7,400
100	78	4,500
200	61	4,100
500	29	3,200
1,000	15	2,600
N/A (Reference alternative)	0	2,000

For the second scenario, using total TRU inventory as the waste retrieval criteria, tanks containing the largest inventory of TRU components would be retrieved first. The concentration of TRU components in those tanks would not necessarily be >100 nCi/g. For this scenario, 90 percent of the TRU is contained in 63 of the 149 SSTs, based on TRAC predictions (see table 9). Specific data are available in RHO-WM-EV-17 (Kupfer 1987).

Table 9. Selective Retrieval of Single-Shell Tank Wastes (Retrieval Based on Total Transuranic Inventory Removed).

Percent of total transuranic removed	Number of tanks retrieved	Cost in millions of 1987 dollars
0% (Reference alternative)	0	2,000
15%	1	2,200
20%	2	2,400
35%	5	2,500
50%	10	2,900
60%	17	3,200
70%	25	3,400
80%	33	3,700
90%	63	4,500
100% (Geologic alternative)	149	7,400

With selective retrieval, SST feed pretreatment objectives are consistent with those for the Reference alternative for existing and future DST wastes. The feed pretreatment process for SST waste is limited to dissolution of the salt cake and the separation of sludge and dissolved salt cake by centrifugation. The sludge is washed with water to assure dissolution of soluble salts. Salt-well pumping of SSTs will remove most of the cesium-containing interstitial liquor so that the total cesium concentration in salt cake will be less than that for existing DST wastes. In the Reference alternative, cesium is not removed from existing DST waste. Consequently, cesium removal is not included for SST waste. Consistent with the Reference alternative, the clarified salt cake solution is not treated for removal of radionuclides (residual ^{99}Tc, ^{90}Sr, and actinides) in the selective SST retrieval option.

In the Reference alternative, complexed DST waste is treated with ozone to destroy organic complexants. Based on TRAC data (Rockwell 1985), significant quantities of complexants (approximately 90% of the total inventory in SSTs) are present in the interstitial liquid that remains in 18 SSTs. Ozonization may be required for these 18 tanks to ensure that a minimal amount of complexants and TRU elements will be incorporated into grout.

Cost comparisons by cost component and process modules for the SST retrieval scenarios are provided in RHO-WM-EV-17. Costs for retrieval and processing of SST waste per curie of TRU elements recovered are also in RHO-WM-EV-17. As expected, the cost per curie of TRU retrieved increases somewhat with the number of tanks processed. This is expected because the waste in the tanks containing the highest total TRU activity is assumed to be retrieved first. See tables 8 and 9 for cost data.

5.0 REFERENCES

DOE, 1986a, Draft Environmental Impact Statement, Disposal of Hanford Defense High-Level, Transuranic and Tank Wastes, DOE/EIS-0113, U.S. Department of Energy, Washington, D.C.

DOE, 1986b, Draft Phase I Installation Assessment of Inactive Waste-Disposal Sites at Hanford, U.S. Department of Energy, Washington, D.C.

DOE, 1986c, "Calculated Nuclear Waste Fund Disposal Fees for DOE Defense Program Waste; Inquiry and Request for Public Comment," Federal Register, vol. 51, No. 231, pp. 43566-43570, Washington, D.C.

DOE-RL, 1986a, Interim Hanford Waste Management Plan, U.S. Department of Energy - Richland Operations Office, Richland, Washington.

DOE-RL, 1986b, Perspective on Methods to Calculate a Fee for Disposal of Defense High-Level Waste in Combined (Civilian/Defense) Repositories, DOE-RL-86-10, U.S. Department of Energy - Richland Operations Office, Richland, Washington.

ERDA, 1977, Alternatives Long-Term Management of Defense High-Level Radioactive Waste, U.S. Energy Research and Development Administration, Washington, D.C.

Kupfer, M. J., 1987, Cost and Impacts of Retrieval and Processing of Wastes from Selected Single-Shell Tanks, RHO-WM-EV-17, Rockwell Hanford Operations, Richland, Washington.

Rockwell, 1985, Hanford Defense Waste Disposal Alternatives: Engineering Support Data for the Hanford Defense Waste-Environmental Impact Statement, RHO-RE-ST-30 P, Rockwell Hanford Operations, Richland, Washington.

Rockwell, 1986, Preliminary Assessment of the TRAC Model as a Predictor of Key Radionuclide Inventories, RHO-RE-EV-89 P, Rockwell Hanford Operations, Richland, Washington.

APPENDIX

ERRATA FOR RHO-RE-ST-30 P

HANFORD DEFENSE WASTE DISPOSAL ALTERNATIVES: ENGINEERING SUPPORT DATA FOR THE HANFORD DEFENSE WASTE-ENVIRONMENTAL IMPACT STATEMENT

February 1987

Page	Description of Change
xii	Table 2-34. Add "1995" after last word in table caption
xiii	Table 4-7. Insert "Waste" between "Tank" and "Alternatives"
xv	Table 4-60. Change "19709" to read "1970"
xviii	Table 4-123. Change caption to read "Nonradiological Emissions During Operational Phase for Future Tank Waste, Continued Storage Alternative"
2-8	Table 2-3. Change the AY Tank Farm A-dimension to read "2.1" vice "21."
2-13	Third paragraph, fourth line. Change "triacetic" to read "tetraacetic"
2-23	Table 2-13b. Insert new line before ^{243}Am entries: "^{241}Am 3 E+04 2 E+03 4 E+04 3 E+03 3 E+04"
2-39	Table 2-18. Change values for ^{242}Pu to read: "7.4 E-07 2.7 E-06 9.7 E-13"
2-40	Table 2-19. Under Geologic Disposal section insert line: "Makeup Soil (m^3) 14,000"
2-64	Table 2-27. Under 1991-1996, change the ^{239}Pu value to read "3.2 E+01"
2-77	Table 2-34. For ^{239}Pu value, change "2.0 E+03" to read "2.1 E+03"
2-78	Table 2-35. Change "$ZrO \cdot xH_2O$" to read "$ZrO_2 \cdot xH_2O$" Change "Mn^{4+}" to read "Mn^{2+}" Change "Co_3^{2-}" to read "CO_3^{2-}"
2-79	Table 2-36. To Note: add "(Implementation actually occurred July 1985.)"
2-92	Table 2-48. In caption, change "Reference" to read "Geologic"
3-5	Figure 3-3. Change caption to read "Geologic Disposal Alternative for Pre-1970 Transuranic Solid Waste and Contaminated Soil Sites."
4-7	Table 4-4. Change "Diesel fuel" to read "Gasoline" under Gasoline for Geologic Disposal, change "1,020" to read "9"
4-16	Table 4-13. Under Electrical for Hydraulic sluicing, change "20" to read "2.0"
4-17	Table 4-13. Change "Diesel fuel" to read "Gasoline"

4-22 Table 4-16. Under the Evaporation value for Thermal releases, change to read "2.4 E+12"

4-24 Table 4-17. Under the Hydraulic sluicing value for Thermal releases, change to read "7.2 E+06"

4-27 Table 4-18. Under the Double-Shell Tank Value for ^{239}Pu, change "3 E-30" to read "3 E-10"

4-30 Table 4-20. Add to table caption "(sheet 1 of 2)" Note: sheet 2 of 2 is on p. 4-90

4-32 Table 4-21. Change "Diesel fuel" to read "Gasoline"

4-37 Table 4-24. Under Thermal releases for Hydraulic sluicing, change "1.2 E+13" to read "1.2 E+12"

4-38 Table 4-24. Under Thermal releases for Markers, change "2.9 E+12" to read "7.6 E+12"

4-39 Table 4-25. Under Thermal releases for Hydraulic sluicing, change "3.6 E+12" to read "3.6 E+06"

4-45 Table 4-28. Under Diesel fuel for Grout preparation, change "3" to read "28"

4-48 Table 4-29. Change "Diesel fuel" to read "Gasoline"

4-53 Table 4-32. In the table caption, change "Operating" to read "Construction". Replace column heading labeled "Vitrification" with "Canisters" and replace column heading labeled "Canisters" with "Vitrification"

4-54 Table 4-32. Under Thermal releases for Markers, change "2.9 E+12" to read "7.6 E+12"

4-55 Table 4-33. Under Mechanical retrieval, add the following values:

Particulates (kg)	1,600
SO_x (kg)	3,500
CO (kg)	37,000
Hydrocarbons	3,600
NO_x (kg)	6,700
Aldehydes (kg)	410
Organic acids (kg)	410

Under Thermal releases for Hydraulic sluicing, change "3.6 E+12" to read "3.6 E+06"

4-63 Table 4-37. Under Coal for Evaporation and ozonization, add value "30,000"

4-64 Table 4-37. Change "Diesel fuel" to read "Gasoline"

4-70 Table 4-40. Under Thermal releases for Markers, change "2.9 E+12" to read "7.6 E+12"

4-71 Table 4-41. Under Thermal releases for Hydraulic sluicing, change "3.6 E+12" to read "3.6 E+06"

4-76 Table 4-44. Under In-place stabilization and disposal, change the value for Nonradiation worker to read "9.0 E+03"

4-82 Table 4-50. Change the values for ^{242}Pu to read "1.5 E-01 3.7 E-10 2.7 E-13"

4-83 Table 4-51. Change the values for ^{242}Pu to read "1.5 E-01 5.4 E-10 2.7 E-10"

4-84 Table 4-52. Change the values for ^{242}Pu to read "2.8 E-19 7.4 E-07 2.6 E-06 9.1 E-13." Change the Slag output value for ^{238}U to read "1.2 E-11"

4-86 Table 4-54. Under Geologic disposal, change the value for Diesel to read "1.2 E+06." The values listed for Water should be the values for Steel, and the values listed for Electricity should be the values listed for Water. Under Reference alternative, change the value for Rock filter to read "1.2 E+05"

4-87 Table 4-55. Under Geologic disposal, change the value for Electricity to read "3.06 E+05." Change "Concrte" to read "Concrete"

4-89 Table 4-57. Under Radiation worker for Vegetation Control, change "4.5 E+04" to read "4.5 E+03"

4-90 Change caption to read "Table 4-20. Construction Resource Usage for In-Place Stabilization and Disposal of Existing Tank Waste. (sheet 2 of 2)"

4-91 Table 4-58. Change "sheet 2 of 3" to read "sheet 1 of 2"

4-92 Table 4-58. Change "sheet 3 of 3" to read "sheet 2 of 2"

4-95 Table 4-60. Under Reference alternative, change the Annual release value for ^{241}Am to read "4.8 E-09." Under Isotope inventory, change the ^{137}Cs value to read "2.8 E+04"

4-96 Table 4-61. Replace "$^{3}H^{a,c}$" with "$^{3}H^{b,c}$". Under the Isotope inventory value for ^{233}U, change to read "6.5 E-01"

4-98 Table 4-63. Under Recovery building operations, change the Cost Total to read "1.4 E+07"

4-105 Table 4-68. Under In-place stabilization and disposal, change the Construction value to read "2.45 E+07"

4-130 Table 4-93. Change "SPI facility" to read "RH-WRAP"

4-133 Table 4-96. Change "SPI facility" to read "RH-WRAP"

4-143 Table 4-10. Under Tank disposal for In-place stabilization and disposal, change "14" to read "28"

4-154 Table 4-121. In caption, change "New" to read "Future Tank"

4-155 Table 4-122. Under Continued storage alternative, change the Thermal value to read "9.0"

4-159 Table 4-127. Under Evaporation/grout disposal (Gaseous), change the value for ^{90}Sr to read "6 E-10"

4-160 Table 4-128. In footnote e, change "19.7" to read "17.9"

4-163 Table 4-131. Delete last line of footnote.

4-164 Table 4-132. Under Pre-1970 TRU buried solid waste - Construction for Reference, change "1.2 E+03" to read "1.2 E+08"

4-166 Table 4-134. Under Future tank waste - Total for Reference, change "1.2 E+04" to read "4.2 E+04"

A-51 Figure A-3-8. Change "0.3-mm PIPE CAP" to read "0.3-m PIPE CAP"

B-14 Add parentheses around $\frac{C_2}{C_1}$ so that

$$\text{Scaling factor} = \left(\frac{C_2}{C_1}\right)^{0.6}$$

B-18 Under D-8K Caterpillar bulldozer for Horsepower, delete "240" For output rate of capacity, change to read "240 yd^3/h"

C-5 Replace with new page C-5

C-13 Replace with new page C-13

C-14 In fourth line, change "NO^-" to read "NO_x^-"

C-15 Table C-1-1. In fourth line of footnote b, change "steam" to read "stream"

C-40 Replace with new page C-40

E-3 Under definition for Crib, delete parenthetical expression

E-7 Under definition for ICRP, change "Radiation" to read "Radiological."

E-9 Under definition for P., add "A unit of measure for viscosity"

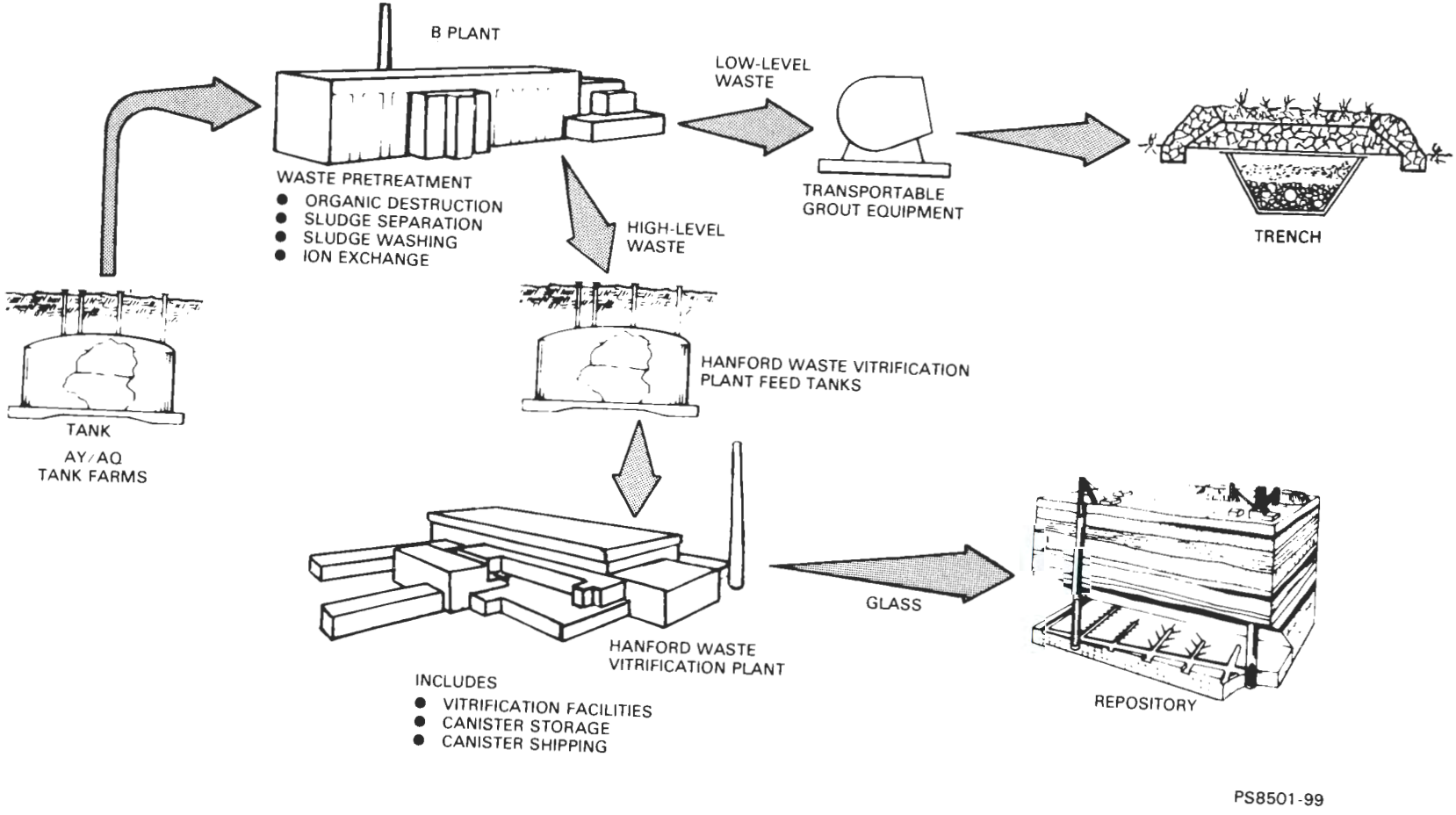

Figure C-1-3. B Plant Interconnections.

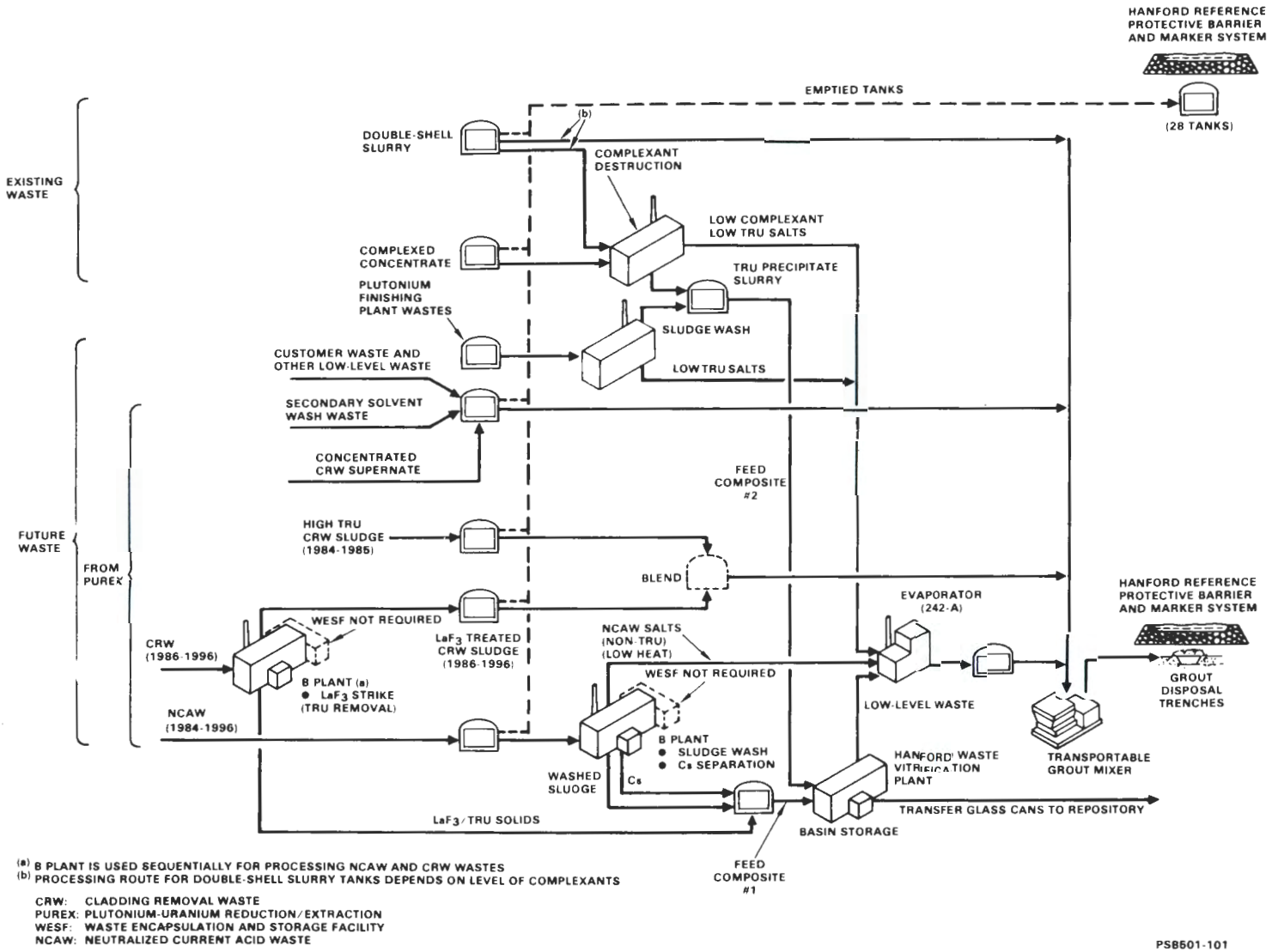

(a) B PLANT IS USED SEQUENTIALLY FOR PROCESSING NCAW AND CRW WASTES
(b) PROCESSING ROUTE FOR DOUBLE-SHELL SLURRY TANKS DEPENDS ON LEVEL OF COMPLEXANTS

CRW: CLADDING REMOVAL WASTE
PUREX: PLUTONIUM-URANIUM REDUCTION/EXTRACTION
WESF: WASTE ENCAPSULATION AND STORAGE FACILITY
NCAW: NEUTRALIZED CURRENT ACID WASTE

Figure C-1-7. Pretreatment Operations.

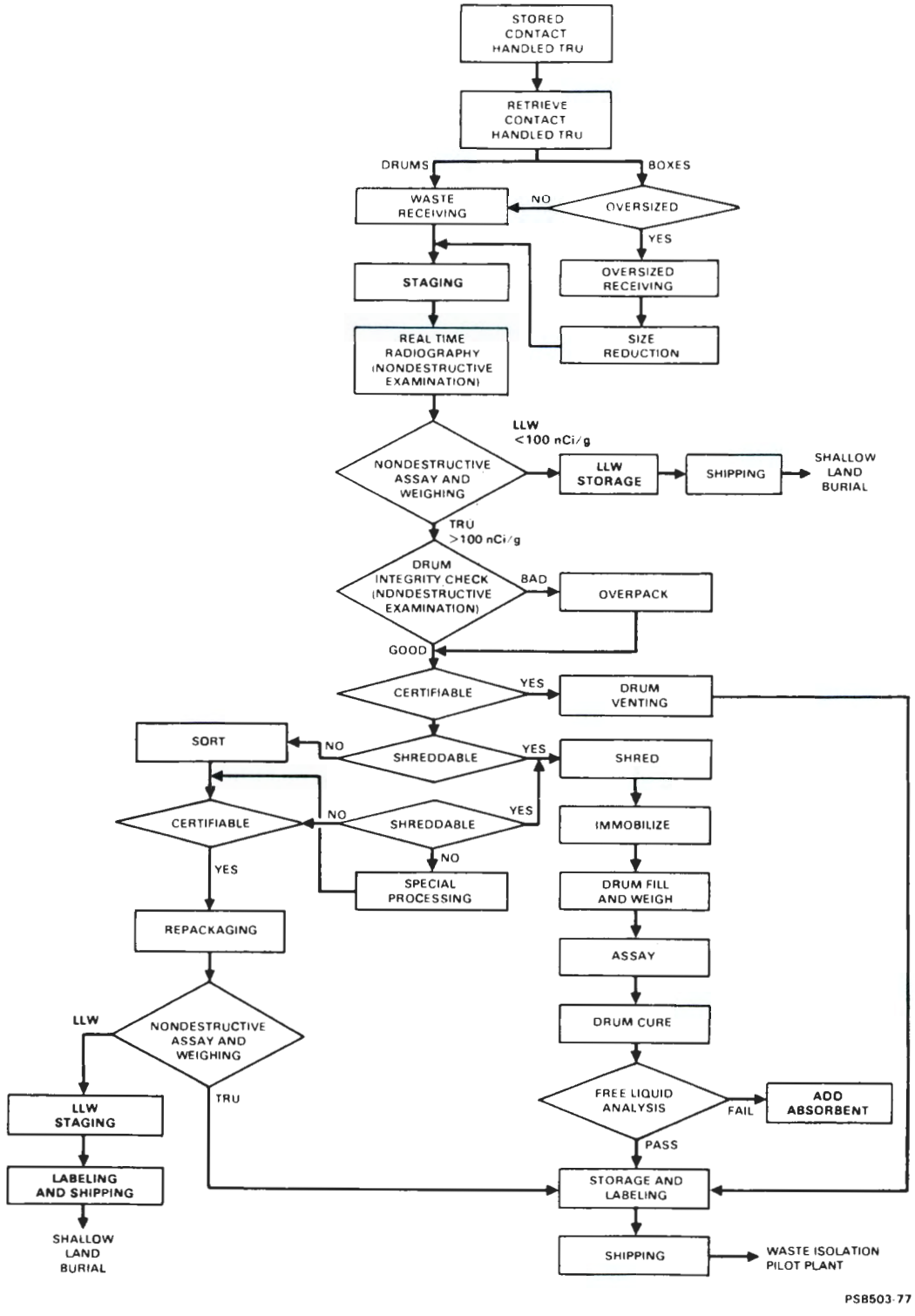

Figure C-3-6. Waste Receiving and Processing Facility Flow Diagram.

DISTRIBUTION

Number of Copies

ONSITE

8 — U.S. Department of Energy-Richland Operations Office

E. A. Bracken
K. H. Rising (5)
M. W. Shupe
J. D. White

40 — Pacific Northwest Laboratory

P. E. Bramson (40)

99 — Rockwell Hanford Operations

M. R. Adams
J. F. Albaugh
J. D. Anderson
J. N. Appel
B. A. Austin
R. G. Baca
T. B. Bergman
L. C. Brown
M. A. Cahill
M. H. Campbell
K. G. Carothers (5)
F. M. Coony
C. DeFigh-Price (10)
C. J. Geier (10)
M. W. Gibson
R. N. Gurley
W. F. Heine
J. M. Henderson
M. E. Heveland (2)
B. A. Higley
J. O. Honeyman
M. T. Jansky (10)
R. D. Jensen
R. A. Kaldor
J. D. Kaser
N. W. Kirch
M. J. Kupfer
K. W. Lindsey
P. G. Lorenzini
C. C. Meinhardt
D. L. Merrick
H. E. McGuire
R. J. Murkowski
S. M. Nielson
L. R. Ogletree
K. W. Owens
L. L. Powers
R. D. Prosser
W. G. Richmond
J. H. Roecker
W. W. Schulz
J. P. Sloughter
D. A. Turner
J. E. van Beek
T. B. Veneziano
D. D. Volkman
R. A. Watrous
S. A. Wiegman
R. T. Wilde
G. F. Williamson
D. D. Wodrich
R. D. Wojtasek
B. A. Wolfe
J. C. Womack
D. E. Wood
J. J. Zimmer
Document Control (4)
Publications Services Department Group III (2)
BWIP Library (5)

NOTES:

NOTES:

NOTES: