U.S. Department of Energy
Office of River Protection
P.O. Box 450, MSIN H6-60
Richland, Washington 99352

0070260

06-ESQ-099

JUL 24 2006

Ms. Jane Hedges, Program Manager
Nuclear Waste Program
State of Washington
Department of Ecology
3100 Port of Benton Blvd.
Richland, Washington 99352

RECEIVED
AUG 07 2006
EDMC

Dear Ms. Hedges:

REVISIONS TO THE REQUIRED SUBMITTAL FOR THE DEMONSTRATION BULK VITRIFICATION SYSTEM (DBVS) FACILITY OFF-GAS TREATMENT SYSTEM DESIGN

References:

1. Ecology letter from M. A. Wilson to R. J. Schepens, ORP, K. A. Klein, RL, and E. S. Aromi, CH2M HILL, "Final Dangerous and/or Mixed Waste Research, Development, and Demonstration Permit for the Demonstration Bulk Vitrification Facility," dated December 13, 2004.

2. ORP letter from R. J. Schepens to J. Hedges, Ecology, "Submittal of Final Dangerous and/or Mixed Waste Research, Development, and Demonstration Permit for the Demonstration Bulk Vitrification Facility: Required Submittal for Off-Gas Treatment System," 06-ESQ-051, dated June 1, 2006.

This letter transmits revised permitting information for the Final Dangerous and/or Mixed Waste Research, Development, and Demonstration Permit for the DBVS for State of Washington Department of Ecology (Ecology) review and approval.

In June 2006, the U.S. Department of Energy, Office of River Protection (ORP) and CH2M HILL Hanford Group, Inc. (CH2M HILL) submitted engineering design and support information for the Off-gas Treatment System (OGTS) to Ecology, for their review and approval. Based on resolutions to Ecology's comments, portions of the OGTS design package and supporting information were revised and recertified by ORP and CH2M HILL. The following information is provided in the attachments:

1. Certification Statement (Attachment 1);

2. Revised Section 4.0 and Permit Tables V.1 and V.4 (Attachment 2), Permit conditions IV.A.8.e, V.I.5.a, V.I.5.b, and V.I.5.c;

3. RPP-CALC-29579, "Estimate of Organic Destruction Removal Efficiencies for the Demonstration Bulk Vitrification System for Tank 241-S-109 Feed," Revision 2, dated July 2006 (Attachment 3), Permit Condition V.I.6.f.i; and

4. Figures F-145579-36-A-0100, -0102, and -0105 of RPP-24544, "Demonstration Bulk Vitrification System IQRPE/RCRA Design Review Package for the Main Off-Gas Treatment System" (RPP-24544, Revision 1D, dated April 26, 2006), Volumes 1 - 5 (Attachment 4), Permit condition IV.A.8.b, IV.A.8.c, IV.A.8.f, V.I.2, and V.I.3.

If you have any questions, please contact me, or your staff may contact Lori A. Huffman, Office of Environmental Safety and Quality, (509) 376-0104, or James F. Thompson, Tank Farms Project, (509) 373-9757.

Sincerely,

Roy J. Schepens, Manager
Office of River Protection

ESQ:LAH

Attachments: (4)

cc w/attachs:

D. B. Bartus, EPA
M S. Spears, CH2M HILL
M N. Jaraysi, CH2M HILL
F. R. Miera, CH2M HILL
J. Cox, CTUIR
S. Harris, CTUIR
K. A. Conaway, Ecology
S. L. Dahl-Crumpler, Ecology
D. W. Hendrickson, Ecology
S A. Thompson, FH (Hanford Operating Record)
G. Bohnee, NPT
K. Niles, ODOE
R. Jim, YN
Administrative record
CH2M Correspondence
Environmental portal

Attachment 1
06-ESQ-099

Certification Statement

The following certification is required by WAC 173-303-810(13) for all applications and reports submitted to Ecology.

I certify under penalty of law that this document and all attachments were prepared under my direction or supervision in accordance with a system designed to assure that qualified personnel properly gather and evaluate the information submitted. Based on my inquiry of the person or persons who manage the system, or those persons directly responsible for gathering the information, the information submitted is, to the best of my knowledge and belief, true, accurate, and complete. I am aware that there are significant penalties for submitting false information, including the possibility of fine and imprisonment for knowing violations.

Roy J. Schepens 7/24/06

Owner/Operator
Roy J. Schepens, Manager
Office of River Protection
U.S. Department of Energy

Date

MS Spears 7/20/06

Co-operator
Mark S. Spears, President
and Chief Executive Officer
CH2M HILL Hanford Group, Inc.

Date

Attachment 2
06-ESQ-099

Revised Section 4.0 and Permit Tables V.1 and V.4

CH2M-0601698

Enclosure 2

REVISED SECTION 4.0 AND PERMIT TABLES
IV.1, IV.2, IV.3, V.1 AND V.4

Consisting of 42 pages, including coversheet

CONTENTS

4.0 BULK VITRIFICATION TEST AND DEMONSTRATION FACILITY 4-1
4.1 TECHNOLOGY-SPECIFIC GOALS AND OBJECTIVES 4-1
4.2 PROCESS AND EQUIPMENT DESCRIPTION 4-1
4.2.1 System Capacity 4-2
4.2.2 Waste Retrieval System 4-2
4.2.3 Waste Receipt and Storage 4-4
4.2.4 Process Additives 4-5
4.2.5 Dry Material Handling 4-5
4.2.6 Liquid Material Handling 4-6
4.2.7 Gaseous Material Handling 4-6
4.2.8 Waste Feed Preparation 4-7
4.2.9 Vitrification Container Preparation 4-7
4.2.10 In-Container Vitrification 4-8
4.2.11 Post-Vitrification Activities 4-8
4.2.12 Offgas Treatment Requirements 4-9
4.2.13 Process Additive Emissions Control 4-10
4.2.14 Mixer/Dryer Offgas Emissions Control 4-10
4.2.15 Phase 1 Main Offgas Treatment System 4-11
4.2.16 Phase 2 Main Offgas Treatment System 4-13
4.2.17 Control and Data Acquisition System 4-13
4.3 SECONDARY WASTE STREAMS 4-13
4.3.1 General 4-13
4.3.2 Liquid Effluent Secondary Waste Streams 4-13
4.3.3 Solid/Semisolid Secondary Waste Streams 4-14

TABLES

Table 4-1. Process Additives Information 4-6
Table 4-2. Offgas Treatment Component Efficiencies 4-10
Table 4-3. Pollutant Removal Efficiencies 4-11
Table 4-4. Scrubber Blowdown Contaminants 4-12
Table 4-5. Liquid Secondary Wastes 4-14
Table 4-6. Solid/Semisolid Secondary Wastes 4-15

Where information regarding treatment, management, and disposal of the radioactive source, byproduct material and/or special nuclear components of mixed waste (as defined by the Atomic Energy Act of 1954, as amended) has been incorporated into this document, it is not incorporated for the purpose of regulating the radiation hazards of such components under the authority of chapter 70.105 RCW and its implementing regulations but is provided for information purposes only.

4.0 BULK VITRIFICATION TEST AND DEMONSTRATION FACILITY

The DBVS treatment equipment will be installed and operated under two phases as described in Section 1.7.1. The scope and conduct of the phased operation is described in detail in Section 5.0. Unless otherwise stated, the configuration and operation described are consistent with Phase 2 activities.

4.1 TECHNOLOGY-SPECIFIC GOALS AND OBJECTIVES

The primary purpose of testing the DBVS is to fully demonstrate the bulk vitrification process on Hanford tank waste while meeting the project objectives listed in Section 1.5 and assuring protection of human health and the environment. In terms of technology-specific assessment goals and objectives, the DBVS must also demonstrate its ability to perform effectively while:

- Preventing the release of contaminants into the environment during processing
- Preventing exposure of plant operating personnel to hazardous process streams
- Minimizing the production of secondary waste streams.

4.2 PROCESS AND EQUIPMENT DESCRIPTION

The primary technology to be used for the DBVS is an ICV® process. Process flow diagrams for both phases of the RD&D project are provided in Appendix B. Process operation is essentially the same for both phases.

The salt solution is retrieved from Tank 241-S-109, subjected to pretreatment as required (Section 1.7.3), and transferred to the waste receipt tank(s). The waste is mixed with glass formers in a mixer/dryer unit and dried prior to being transferred to the ICV® containers (Section 4.2.8). Transfer of the dried waste mixture is accomplished through ports in the container lid.

The ICV® container is prepared before the waste mixture is transferred to the container. Preparation of the ICV® container includes lining the container with refractory materials that will be selected based on successful testing/operation at the range of process temperatures expected. Refractory material will include cast material and sand as noted in Appendix F. The electrodes are then mounted on the container lid. The lid is lowered onto the container with a refractory gasket sealing the lid to the container, bolted in place, and the offgas ductwork is connected. Once the ICV® container is prepared, the waste mixture is added from the mixer/dryer in batches.

The waste mixture is vitrified by resistive heating caused by electrical resistance of soil and waste. The heating cycle lasts for approximately 130 hours.[1] Vitrification emissions are routed to an offgas treatment system (Section 4.2.12).

After completion of the vitrification process (Section 4.2.11), fill material (e.g., sand) will be added to fill the void container volume and provide a sufficient fill fraction (>90% by volume) for container landfill disposal. The vitrified waste will undergo cooling, sampling, and external

[1] Total container processing time, including waste mixing/drying, container fill, connection hookup, etc., is approximately 168 hours or one operating week.

decontamination as required. Final cooling may occur at designated cooling stations along the process line or at an interim storage location on the Test and Demonstration Facility site. Core samples may be removed through ports in the container for analysis and testing. Test results will be used to support waste form qualification, risk assessment, and performance assessment. A composite core sample (e.g., vitrified material, sand, and refractory material) will be evaluated for compliance with LDR, as noted in Section 6.0.

4.2.1 System Capacity

The feed rate to the mixer/dryer may be varied as one of the parameters being evaluated through this demonstration project. During Phase 1, up to three test runs will be performed to conduct systems verification and initial waste treatment using approximately 1,135 L (300 gal) of tank waste per container. The amount of waste introduced into each container will be varied during Phase 2 in order to investigate the effect of waste loading on processing time, electric power usage, etc. Over the entire series of test campaigns in Phase 2, the average waste material volume used per test will be approximately 58,080 L (15,345 gal) of a 5 M salt solution. However, individual campaigns may be conducted using up to 76,540 L (20,220 gal) of a 5 M salt solution in a container load.

4.2.2 Waste Retrieval System

As noted in Section 2.3.2, the WRS will provide waste feed from Tank 241-S-109 to the DBVS in two distinct phases. During Phase 1, a limited quantity of waste is planned to be provided to the DBVS. During this phase, the quantity of waste will be limited within the facility such that the facility will be classified as below a Hazard Category-3 radiological facility as defined in DOE-STD-1027-92, *Hazard Categorization and Accident Analysis Techniques for Compliance with DOE Order 5480.23, Nuclear Safety Analysis Reports.* During Phase 2, the quantity of waste to the facility will be increased such that the facility will be classified as a Hazard Category-2 facility. The qualitative definition of a Hazard Category-2 facility is that the hazard analysis shows the potential for only significant localized consequences.

During Phase 1, waste transfer could occur through a Waste Staging Tank Skid, and when this occurs, the following safety features will be included:

- Leak detection - The skid will perform a secondary containment role. If there are any leaks in the staging tank, piping, fittings, etc, within this skid, the skid will contain the leak. A leak detection sensor located on the floor of the skid will detect the leak and activate an alarm system. Any material leaked into the skid will be routed back to either Tank 241-S-109 or to the DST system.
- Waste staging tank ventilation - The waste staging tank and the containment structure will be "passively vented" to atmosphere through high-efficiency particulate air (HEPA) filter(s).
- Tank overflow protection - A tank overflow detector will be provided, with remote indication that the tank level has been exceeded. An overflow line will also be provided to direct the overflowing waste to the floor of the skid. As mentioned above, if this "faulted condition" occurs, the leak detection system will identify the situation and waste transfer operations can be stopped.

- Sampling port - A sampling port will be provided on the top of the waste staging tank to allow waste samples to be withdrawn from the tank for analysis.
- "Bad batch disposal"- If the waste staging tank's contents are found not to be within the acceptable specification for acceptance to the DBVS, the waste batch will be sent to the DST system. The waste retrieval pump can be valved to send out-of-specification waste back into the transfer line to Tank 241-S-109, and via the 3-way valve in the pump pit, to the SY Farm Waste Retrieval Receiver Tank.

4.2.2.1 Phase 1 Activities. During Phase 1, waste from Tank 241-S-109 could be sent to a double-wall staging tank that will hold 3,780 L (1,000 gal) of waste or the waste could be sent directly to the waste receipt system. A retrieval pump will be used to remove waste from Tank 241-S-109 and transfer it either to the staging tank or directly to the waste receipt system. It is anticipated that the waste transfer pump will be a jet pumping system similar to the ones used for saltwell pumping on the Hanford Site and that the transfer rate will be between 19 L/min and 28 L/min (5 - 10 gpm). The pump, solids/liquid separator, and the sensing systems noted in the following paragraphs will be located in a pump pit containment structure adjacent to Tank 241-S-109.

The pump suction will be screened to prevent entrainment of solid particles in the pump inlet stream. The pump discharge will be routed through a solids/liquid hydroclone separator capable of reducing the waste stream solids content to 3% or less. Hydroclone separator devices use a tangential inflow to a vertical cylindrical vessel creating a spiral flow path for the liquid, using centrifugal forces to remove solid particles from the flow stream and move them outwards to the vessel walls. The dispersed particles move downward under gravity into a cone-shaped collection chamber, while the purified liquid moves upward to the center of the unit to a top mounted outlet. The unit is usually equipped with an airlock on the collection chamber to maintain pressure drop across the unit without drawing in ambient air. This filtration system will have the capability to be flushed back to Tank 241-S-109 and/or be replaced, if the differential pressure across it exceeds the allowable value.

From the solids/liquid hydroclone separator, the filtered waste will be monitored by sensing instruments to provide process control over waste transfer or waste characteristic information. Waste transfer process control will be based on the results of waste sampling and analysis. The proposed instruments to be included in this system are:

- A flow meter capable of indicating the specific gravity and flow rate of the waste.
- A chemical speciation probe.[1] This is an experimental device being developed by Pacific Northwest National Laboratory that will utilize Raman technology to provide scientific information on the chemical speciation of the waste.
- A conductivity probe. This device will provide information on the waste conductivity. The conductivity probe is planned to be a process control device.
- An optional gamma radiation monitor.

[1] Due to the experimental nature of this probe, it will not be used for regulatory compliance purposes.

A three-way valve will direct waste to either the waste staging tank, waste receipt system or, if the waste does not meet the waste acceptance criteria noted in Section 6.0, to the DST system for storage and eventual disposal. The waste transfer piping from pump pit to any of these locations will be through a hose-in-hose-transfer line (HIHTL) and will be equipped with an optional on-line radiation monitoring system which will continuously measure the quantity of Cs-137 being transferred through the HIHTL.

Initial waste retrieval during Phase 1 will direct waste to the DST system. CH2M HILL Process Engineering personnel will monitor the transfer data, while waste is being sent to the SY tank farm and determine when to route the waste stream to the waste staging tank or the waste receipt system. When the waste characteristics are deemed acceptable for processing, the three-way valve in the pump pit will be positioned to send waste to the waste staging tank or the waste receipt system.

When used, the waste staging tank will have only one inlet/outlet combination. While transferring waste from Tank 241-S-109 to the waste staging tank, the tank will be connected to Tank 241-S-109 via a HIHTL. With this design, the system is physically disconnected from the DBVS facility when the waste staging tank is being filled with waste. Once the waste staging tank is filled the waste batch is characterized. When it has been verified that the waste meets the DBVS waste acceptance criteria the HIHTL connecting the waste staging tank and Tank 241-S-109 will be disconnected. The HIHTL from the DBVS facility will then be connected to the same connector on the waste staging tank. The contents of the waste staging tank will then be pumped to the DBVS receiver tank, via this HIHTL that will exit the farm, go under Cooper Avenue, and mate up with a receiver skid at the DBVS facility.

If analysis of tank contents determines that the waste batch is not acceptable for processing, it will be routed to the DST system.

4.2.2.2 Phase 2 Activities. During Phase 2, the "segmentation" concept from Phase 1 will no longer be required since the DBVS Facility will be a Hazard Category-2 facility. Waste transfer rates will be increased to an anticipated 76 L/min (20 gpm). The waste tank can, and will be, directly connected to the DBVS facility. The transfer route from Tank 241-S-109 to DBVS will bypass the waste staging tank skid. The solids/liquid separator and the sensing instrumentation will be retained but the solids/liquid separator capacity will be increased to accommodate the increased waste flow rate.

4.2.3 Waste Receipt and Storage

The WRS transfers waste into waste receipt tank(s) for process feed, storage, and sampling. The waste received will be stored in tanks as noted in Table 2-1. Tank capacities are based on anticipated waste processing rates described in Sections 1.7.5 and 4.2.1. All waste storage tanks will be double-wall construction with HIHTL and leak detection provisions. Waste tanks will be vented through the offgas treatment system (Sections 4.2.15 and 4.2.16).

A single 3,780-L (1,000-gal) waste receipt tank will be used during Phase 1 because the total amount of waste treated in the initial campaigns will be minimal. The use of a small tank will limit the amount of waste stored during Phase 1 to an amount below Hazard Category-3 requirements.

At the completion of Phase 1, the 3,780-L (1,000-gal) storage tank may be retained and used for storage of process additives such as simulated waste materials (simulants) or spiking agents during Phase 2 if allowed after flushing and inspection to clean debris standards.

Three Waste Receipt Tanks will be installed during Phase 1 for Phase 2 operations so that one or more tanks can be used to provide waste feed for treatment while the other tanks are being filled and sampled as described in Section 6.0. The waste receipt tanks have a maximum capacity of 68,137 liters (18,000 gallons) each and are constructed of carbon steel. Secondary containment is provided by a secondary tank that encloses the inner tank and will hold the entire contents of the primary tank. Leak detection is provided by a high level alarm located in the sump for each tank and will detect a leak at 65 gallons. The Waste Receipt System is represented on Process Flow Diagram B-4 located in Appendix B of Permit Attachment KK. P&IDs for the Waste Receipt System and the detailed designs are also located in Permit Attachment KK. The detailed design for the Waste Receipt Tanks is provided on drawings DBVS-SK-M105, sheets 1 and 2, F-145579-00-P-005, and Specification F-145579-D-SP-028.

4.2.4 Process Additives

The DBVS will use soil, waste simulants, glass additives, offgas treatment chemicals, and other materials as process additives. Table 4-1 contains a summary of these materials, their storage methods, and uses. Soil will be used to form the matrix for the vitrification process and to add an additional layer of clean material on the vitrified mass in the container. Waste simulants will be used for running system verification tests prior to treatment of actual SST waste during Phase 1 and as "filler" to attain the required process material volume (waste plus simulant) for a given test campaign during testing in both phases. Waste simulants could include spiking agents for specific process performance testing purposes. The majority, estimated at seventy-five percent (75%) of simulants will be used in Phase 1. A 68,140-L (18,000-gal) double-wall tank will be used for simulant storage during this phase. This tank may be retained onsite for use as one of the waste storage tanks for Phase 2 operations or may be removed from the site at the completion of Phase 1. Process additives will be kept in dedicated storage areas segregated from regulated waste storage to minimize the possibility of contamination. Residual simulant material not used in Phase 2 will be analyzed for dangerous waste characteristics and, if designated as dangerous waste, will be managed in accordance with standard Hanford Site procedures.

Graphite will be placed in the vitrification container to help initiate the soil/waste melting process. Boron and zirconium will be used in small quantities (approximately 2,100 kg (4,630 lbs) and 3,000 kg (6,615 lbs) per container load, respectively) to optimize glass performance. Sand will be used as an insulator.

4.2.5 Dry Material Handling

Clean soil is added to the dryer from the Process Additive Handling System through a penetration into the enclosure and a nozzle penetration into the dryer. The addition of zirconium oxide and boron oxide is accomplished through two connection points through the enclosure and then through the other dryer nozzles. Process additives are added to meet a target composition for the final dried waste product. Process additives (soil, xirconium oxide, and boron oxide) are gravity feed into the dryer. Addition of each material is controlled using a pair of spherical disk valves located beneath each of the three impingement tanks (See Attachment LL, Appendix 3,

Section 3, Drawings F-145579-31-A-0100 and F-145579-31-A-0101). The loading point for soil into the treatment system will be equipped with parallel storage silos and a baghouse air pollution control system. For stockpiles, engineering controls for dust suppression will be implemented.

Table 4-1. Process Additives Information

Additive	Form	Storage Method	Use	Point of Introduction
Soil	Solid	Hopper (Phase 1) Hopper stockpile (Phase 2)	Vitrification matrix, container topoff	Dryer
Sand	Solid	Stockpile	Insulating material	ICV container
Waste simulants	Solid/slurry	Tank	Waste material substitute; "spiking agents"	Waste receipt tank, dryer
Graphite	Solid	Containers	Vitrification aid	ICV container
Boron	Solid	Containers	Glass performance aid	Dryer
Zirconium	Solid	Containers	Glass performance aid	Dryer
Water	Liquid	Tank	Air pollution control	Quench unit, venturi scrubber.
Ammonia	Gas	Pressurized tanker	Air pollution control	Selective catalytic reduction

4.2.6 Liquid Material Handling

Liquid materials other than waste feed will be used during DBVS operations. These include water and scrubbing chemicals. Water will be provided directly from tanker trucks. Other liquid material used will either be stored in portable tanks or in containers (e.g., carboys, drums) depending on the material handling requirements and/or the quantity used. Materials stored in portable tanks will be replenished either by removal and replacement of the tank or refilling from a tanker. Liquid chemical storage areas will be provided with suitable spill containment provisions.

4.2.7 Gaseous Material Handling

As an integral part of a best available control technology program, ammonia will be used as an air pollution control aid for removal of oxides of nitrogen (NO_x). The gas will be supplied from a pressurized liquid ammonia tanker truck. Ammonia will be vaporized and injected into the offgas stream to ensure proper mixing and efficient NO_x scrubbing.

4.2.8 Waste Feed Preparation

Before the vitrification process begins, the waste material will be mixed with additives and dried to remove moisture in a batch-mode rotary mixer/dryer. The 10,000-L mixer/dryer receives waste through nozzles located on top of the mixer/dryer (Permit Attachment LL, Appendix 3 Figure 143643-D-SP-001). Glass-forming additives are also added through nozzles on top of the dryer. Heat and vacuum are used to dewater the waste feed/soil mixture. The unit will be indirect-heated by steam from an onsite diesel-fired boiler. The boiler is a closed-loop system. The mixer/dryer mixes the contents with rotating plows that direct the waste from the ends of the mixer/dryer towards the center. The vacuum facilitates the dewatering process by promoting evaporation at a low temperature (140°F), and withdrawing the vapor from the mixer/dryer headspace.

Appropriate additives will be conveyed or transferred to the unit. Waste material will be pumped from waste receipt storage tanks. The dry material transfer systems will be equipped with weigh stations to control the amount of material being added to the dryer.

The mixer/dryer fill capacity for waste salt solution and process additives is 10,000 L (2,645 gal) at a nominal fill fraction of 45 to 50% (48.4% is the measured fraction from testing). The nominal drying cycle time is eight hours but may be as short as six hours for relatively dry incoming waste. During the mixing/drying cycle, the unit will be maintained under vacuum to promote the release of moisture from the material being processed at a reduced temperature. Off gas emission controls are described in Section 4.2.14. The moisture content of the material will be monitored by a load cell on the unit (noting the weight of moisture removed) and a moisture sensor in the exhaust duct. The Dried Waste Handling System will pneumatically convey dried waste from the mixer/dryer to the ICV System. The Dried Waste Handling System consists of the dried waste inlet skid, the dried waste transfer skid, the waste receiver and filter housings, the ancillary waste transfer enclosure (AWTE) and the interconnecting piping and valves. The waste receiver units also have sintered metal filters and HEPA filters for treatment of air exiting the waste receiving units. The detailed design for the Dried Waste Handling System is provided on drawings DBVS-SK-M107, sheets 1 through 3, in Permit Attachment LL, Appendix 5, Section 3, and F-145579-00-D-0041, F-145579-00-D-0051, F-145579-33-A-0101 and F-145579-33-A-0106 in Permit Attachment LL, Appendix 5, Section 3.

Mixer/dryer offgases will be treated to remove moisture before being routed to the main offgas treatment system for additional emission control.

4.2.9 Vitrification Container Preparation

The typical waste container for the vitrification process is expected to be a steel box approximately 3.0 m (10 ft) high, 2.4 m (8 ft) wide, and 7.3 m (24 ft) long. Containers will comply with the waste acceptance criteria for the receiving TSD unit (a permitted Hanford Site facility). Prior to waste distribution, the container will be lined with insulating board, sand, and a layer of castable refractory. The castable refractory will face the waste material. A layer of melt-initiating graphite and soil will be placed over the castable refractory in the bottom of the container. Appendix F in Permit Attachment FF contains additional information on the ICV container refractory. The container will also contain a port(s) for sampling the vitrified waste to obtain samples for analyses listed in Section 6.0.

A steel lid with attached electrodes will be sealed onto the container prior to waste deposition using bolted flanges and a refractory gasket. The lid contains several ports for waste material addition, electrode connections, venting, sampling, and introduction of post-vitrification materials. All connections will be mechanically sealed to the container lid. In addition, waste transfer connections will be equipped with shutoff valves to prevent spillage of material as the chute is attached to and removed from the port. To minimize potential contamination to workers and the environment, the connection points will be equipped with secondary containment and spilled material recovery equipment during material transfer, melting, and cooldown. Containment will consist of an ancillary waste transfer enclosure (AWTE) that seals to the container lid before waste is added to the container. The AWTE provides containment while the waste and soil addition connections are made and during the melt process. The operator is able to access the waste and soil addition connections in the AWTE. Once the melt is complete and the container is cool enough to add clean soil on the top, the AWTE will be removed to allow the container to move to the temporary storage area. The waste container filling/vitrification station will be equipped with shielding, as required. (Permit Attachment LL, Appendix 6, Section 3, Drawing # F-145579-35-A-0099.)

4.2.10 In-Container Vitrification

The waste mixture, including simulants and glass formers, from the mixer/dryer will be placed into the vitrification container through ports in the sealed container lid. Electric power will be applied to the electrodes, vitrifying the container contents via resistive heating to produce ILAW. The ILAW is the final RCRA waste form for disposal. Ambient air, filtered through a HEPA filter, is injected to assist in establishing and maintaining airflow through the container to the offgas treatment system, cool the vitrification offgases, and provide thermal protection for HEPA filters in the offgas treatment system. Vitrification offgases are vented under induced draft to the offgas treatment system. During the vitrification process, the depth of material will typically decrease due to consolidation in melting. (Permit Attachment LL, Appendix 6, Section 3, Drawing # F-145579-35-A-0100.)

Both "bottom-up" and "top-down" melting may be conducted during testing to determine the most effective method of waste treatment. The current plans focus on the bottom-up melt procedure; however, there may be a need to perform top-down melting at some time during the testing process. Top-down melting is conducted by applying power to the electrodes only after all waste materials and process additives have been placed in the container. Bottom-up melting begins melting with a shallow layer of material in the container and continues as more material is added until the desired depth of melt is obtained.

4.2.11 Post-Vitrification Activities

After vitrification has been completed, the container connection to the offgas treatment system will be maintained. Clean fill materials will be added to fill cavities around the electrodes and cover the top of the vitrified mass to minimize headspace in the container, creating a container that is at least 90% full.

Sampling of the vitrified waste, radiation surveying, and external decontamination (container wipedown, vacuuming of dust, etc.), as necessary, can be conducted any time after initial cooling has been completed. Sampling of the melt will be conducted by a coring process through a port

in the side of the container. The method of sealing the sampling port during and after sampling has not been finalized. However, the port will be sealed in such a manner that the container remains in compliance with the RD&D Permit and the permitted storage/disposal facility waste acceptance criteria. Sampling protocol and methodology is addressed in Section 6.0. The data obtained will be used for waste form qualification, risk assessment, and performance assessment.

Temporary storage for up to 50 treated waste containers will be located at the north end of the Test and Demonstration Facility (Figure 2-2). At the completion of RD&D activities, the containers will be transported to the IDF or to another permitted Hanford Site storage/disposal facility.

4.2.12 Offgas Treatment Requirements

Emissions may consist of either fugitive (i.e., bulk process additive loading and transfer) or point (i.e., stack) sources. Hazardous or radioactive emissions will not be released through fugitive sources, as those sources will be limited to nonhazardous and nonradioactive materials. Emission calculations for all sources will utilize appropriate emission factors, source classification codes, or other information. Fugitive emissions, which will consist only of nonhazardous materials such as dust from process additive transfers, will be addressed in the *New Source Review Notification of Construction for the Supplemental Treatment Test and Demonstration Facility* (Schepens 2004).

Point sources may emit both nonradioactive and radioactive emissions. These sources will be equipped with a continuous emissions monitoring system (CEMS) that will monitor and record emissions of radionuclides (beta and gamma detectors) and those criteria pollutants (e.g., particulate matter, carbon monoxide [CO], NO_x, and oxides of sulfur [SO_x]) for which regulatory monitoring requirements exist and are included in the final emission source permit(s)). The CEMS will be designed, installed, and operated in compliance with applicable portions of 40 CFR 60, Appendix B. The design of the gaseous and particulate effluent monitoring system will comply with ANSI/HPS N13.1, *Guide to Sampling Airborne Radioactive Materials in Nuclear Facilities*. The CEMS data will be acquired in real time, but will be available for review in the form of periodically generated reports. Offgas treatment for DBVS operations will address the following issues:

- Particulate and gaseous emissions from waste receipt and storage
- Particulate emissions from process additive receipt, storage, and transfer (not including fugitive emissions from stockpiles)
- Particulate and gaseous emissions from mixer/dryer (dedicated partial system)
- Particulate and gaseous emissions from waste container filling and vitrification
- Particulate emissions from waste container topoff after vitrification.

All offgas treatment system connections to treatment equipment and the waste container tops will be sealed and the offgas ducting maintained under induced draft to prevent escape of pollutants.

With the exception of process additive management emissions, all emissions will be routed to an offgas treatment system prior to discharge to the atmosphere. Nominal efficiencies and the major pollutant controlled by the various offgas treatment system components used are provided in Table 4-2. Table 4-3 contains calculated removal efficiencies for major pollutants. Removal efficiencies were calculated using the Table 4-2 component efficiencies and the offgas treatment system arrangement in Appendix B. Appendix B contains additional information on the offgas treatment system components and efficiencies.

Table 4-2. Offgas Treatment Component Efficiencies

Component	Nominal Control Efficiency					
	Water/ Water Vapor	Organic Compounds	HCl	NO_x	SO_x	Particulate[1]
Baghouse	—	—	—	—	—	99%
Condenser	95 – 98%	~~50~~70%	<10%	<10%	<10%	—
Mist Eliminator	10 – 25%	—	—	—	—	—
Sintered Metal Filter	—	—	—	—	—	99.5%
HEPA Filter	—	—	—	—	—	99.95%
~~Quench System~~	~~10 – 25%~~	~~1080%~~	~~10%~~	~~10%~~	~~10%~~	~~10%~~
Packed Tower ~~Scrubber~~Quencher ~~(optional)~~[2]	—	~~90~~70%	93%	93%	93%	<50%
Venturi Scrubber	—	~~25~~71%	25%	25%	25%	95%
Selective Catalytic Reduction Unit(s)	—	—50%	—	~~99~~97.3 %[3]	—	—
Carbon Filter[2]	—	95 – 99%	25%	25%	25%	—

[1] Particulate removal efficiencies are for ten-micron (10 μ) particle diameters and up. Removal efficiencies are based on AP-42 (EPA 1995), Appendix B.1, reference texts and process knowledge

[2] Efficiency range varies with pollutant adsorbed

[3] The selective catalytic reduction design goal is 99% efficiency

4.2.13 Process Additive Emissions Control

Particulate emissions from offloading and transfer of process additives will be controlled by dedicated baghouse and vent systems. A covered hopper with a sealed pneumatic conveying system will be used to transfer soil to the mixer/dryer soil holding tank or silos. Particulate matter collected at the baghouses is returned to the appropriate additive storage area for reuse.

4.2.14 Mixer/Dryer Offgas Emissions Control

The mixer/dryer emissions will be partially treated for moisture removal using a glycol-cooled condenser prior to being routed to the main offgas treatment system. As the vapor is produced in the dryer, it is pulled by the vacuum pump through a sintered metal filter to remove particulates before the vapor reaches the condenser unit. The particulates captured in the filter are returned to the dryer drum via back-pulsing the filters with compressed air. Condensable gases are captured in the Condensate Recovery System by a condenser unit cooled by the dryer chiller

pump skid and chiller unit. Condensate is collected in Tank 33-D74-015 (Permit Attachment KK, Appendix 3, Section 3, Figure F-145579-33-A-0101). The partially treated offgases from this system will then be routed to the main offgas treatment system downstream of the chemical/venturi scrubber. In the event that the dryer offgas system is not operating, the gases in the waste dryer will flow through a rupture disk (Set to rupture at 5 psig and 250°F) to the main offgas treatment system. (Permit Attachment LL, Appendix 7, Section 3, Figure F-145579-36-A-0102.) Water condensed in the condenser and removed in the mist eliminator will be routed to the Secondary Waste System for sampling and subsequent treatment or disposal. Estimated rates and volumes of liquid secondary wastes generated from offgas emissions control system operations are provided in Section 2.6.

Table 4-3. Pollutant Removal Efficiencies[1]

Pollutant	Nominal Control Efficiency
Moisture	96%
Organic Compounds	98%
HCl	55%
NO_x	99.95%
SO_x	<50%
Particulate Matter	>99.9999%

[1] Based on arrangement of offgas treatment system components in Appendix B process flow diagrams

4.2.15 Phase 1 Main Offgas Treatment System

The Phase 1 offgas treatment system will consist of two stages of sintered metal particulate filters, a glycol-cooled condenser, a quench section, one atomizing chemical scrubber/venturi scrubber, mist eliminator system, additional stages of HEPA filtration and an independent NO_x treatment device.

Offgas from the melting process first passes through two stages of sintered metal particulate filtration. The purpose of the filters is to minimize radioactive contamination of downstream components to facilitate maintenance and operations. Dust collected from the sintered metal filters is recycled to the mixer/dryer. Dust from the final batch will be incorporated into the mixer/dryer where a final container using clean fill material will be processed to flush the system, and sent to the IDF or another permitted disposal facility. See Permit Attachment LL, Appendix 7, Section 3, Figure F-145579-36-A-0099 for details. HEPA filters later in the system backup the sintered metal filters ensuring the particulate emissions are minimized.

After the sintered melt filters, the offgas passes through a quencher that cools the gas prior to introduction into the atomizing chemical scrubber/venturi scrubber. In addition to quenching the offgas, the quencher augments the ability of the system to remove particulate matter and gaseous pollutants~~. Although this augmentation is not credited.~~, and it provides additional redundancy or capability to the offgas system. (Permit Attachment LL, Appendix 7, Section 3, Figure F-145579-36-A-0100.)

Following the quencher, offgas is introduced into an atomizing chemical venturi scrubber. Dilute sodium hydroxide will be injected in the atomizing scrubber section to reduce hydrogen chloride and other acid gas emissions. In addition to scrubbing hydrogen chloride and other acid gas emissions from the offgas, the scrubber augments the ability of the system to remove particles and NO_x. ~~This augmentation is not credited but occurs nonetheless and provides additional redundancy or capability to the offgas system.~~

Following the atomizing chemical venturi scrubber, offgases will pass through an additional condenser and a mist eliminator, with drainage from this unit routed to the scrubber recycle tanks. Condensed liquids are drained into the scrubber recycle tank. An offgas heater, parallel HEPA filters, and a carbon filter for radioactive iodine removal will follow the mist eliminator. (Permit Attachment LL, Appendix 7, Section 3, Figures F-145579-36-A-0102 and F-145579-36-A-0107.)

NO_x treatment will be accomplished by a selective catalytic reduction (SCR) unit. Offgases will be discharged through redundant exhaust blowers in parallel, and the system stack. (Permit Attachment LL, Appendix 7, Section 3, Figure F-145579-36-A-0103.)

Venturi scrubber blowdown contaminant types and their weight fractions/concentrations are provided in Table 4-4. Carbon filters will be modular units rather than refillable contactors. Upon reaching saturation, the units will be removed, sampled, and disposed.

Table 4-4. Scrubber Blowdown Contaminants

Contaminant	Concentration
Sodium Hydroxide (NaOH)	2 % by weight
Sodium Nitrate ($NaNO_3$)	13 % by weight
Sodium Carbonate (Na_2CO_3)	2.5 % by weight
Sodium Sulfite (Na_2SO_3)	0.5 % by weight
Sodium Chloride (NaCl)	0.02% by weight
Sodium Fluoride (NaF)	4 ppm by volume
Cs-137	Trace

The emergency bypass is designed for emergency use and will only be used when the OGTS has an unexpected shutdown, due to power loss or major equipment failure. Should this happen automatic interlocks will stop the glassforming process by ceasing the melt feed and removing power from the ICV box electrodes. The same interlocks cause the Main OGTS to be bypassed and direct remaining off-gas generated after the process shutdown through the emergency bypass to discharge through the 155-ft stack. This shutdown process is designed to meet the permit requirements stated in Part II, Section II.A.5.

To minimize emergency bypass usage the OGTS has been designed to be a very reliable system with redundant equipment at key potential failure points (HEPAs, HEGAs, Exhaust Fans, etc.). For example, the SMFs, although normally operated in sequence, are capable of being bypassed so that each can run while bypassing the other. The number of controls valves has also been minimized to improve reliability. The design includes sufficient sensors and data collection to

accurately track all emergency bypass events and event duration that lead to use of the emergency by-pass. The design of the system meets UBC seismic and code requirements, resulting in enhanced quality specifications. Note: As used within this text, any reference to the OGTS bypass implies OGTS emergency bypass.

4.2.16 Phase 2 Main Offgas Treatment System

It is not expected that any enhancements of the offgas treatment system will be required between the end of Phase 1 and the beginning of Phase 2. However, if the Phase 1 offgas treatment system performance does not meet expectations, changes to the system will be made with prior Ecology approval.

4.2.17 Control and Data Acquisition System

The DBVS control system and the associated data acquisition systems will be located in a trailer as shown in Figure 2-2. Some operating parameters may be monitored and operating steps may be performed manually as opposed to remotely. Personnel safety and ALARA considerations will require that many of the operations directly related to the process (mixer-dryer, melt station) be monitored and performed remotely. Other operations such as operation of the utilities, secondary waste, SCR, etc, will have key parameters monitored remotely while other monitoring and operating steps are manual. Both RD&D experiment data (process operating conditions) and offgas emissions data will be acquired.

4.3 SECONDARY WASTE STREAMS

4.3.1 General

All Test and Demonstration Facility secondary waste streams (i.e., any output stream other than the treated DBVS waste) will be managed in accordance with the ~~*Hanford Site Liquid Waste Acceptance Criteria* (HNF-3172) or *Hanford Site Solid Waste Acceptance Criteria* (HNF-EP-0063) and the~~ appropriate Hanford Site receiving TSD unit waste acceptance criteria for the treatment and/or disposal path for each stream. A waste minimization program for secondary wastes will be implemented. Shipments of waste to offsite treatment or disposal facilities are not anticipated. However, should they occur, these shipments will be conducted in compliance with WAC 173-303-280(1).

Nonradioactive nonhazardous waste streams include air pollution control equipment dusts from process additive transfer, used baghouse filters, empty process additive containers, and damaged/failed equipment. These waste materials will be managed as general solid waste per *Hanford Environmental Protection Requirements* ~~(HNF-RD-15332)~~, and will meet the appropriate waste receiving units waste acceptance criteria.

4.3.2 Liquid Effluent Secondary Waste Streams

The Test and Demonstration Facility will produce the liquid secondary wastes noted in Table 4-5. The secondary waste stream will be sampled and analyzed prior to being routed to the ETF or other facility for treatment. Sampling and analysis will be performed in accordance with the waste acceptance criteria of the receiving disposal facility. Secondary wastes will be collected either continuously or at scheduled intervals and stored at the Test and Demonstration

Facility in 68,140-L (18,000-gal) double-wall tanks. Up to 10 liquid effluent storage tanks may be onsite at the Test and Demonstration Facility at a given time, depending on the rate of waste generation and the duration of sampling and analysis. Sampling and analysis procedures are noted in Section 6.0. When a tank is filled, its contents will be sampled and the waste will be transported to the ETF. If required, wastes will be filtered prior to shipment to ETF. If the waste does not meet ETF waste acceptance criteria, it will be sent to a DST or other approved Hanford Site storage facilities.

The Secondary Waste System is located on the northwest corner of the DBVS site (See drawings F-145579-00-D-0002, F-145579-00-P-0008 and F-145579-00-P-0013 in Attachment KK, Appendix 4, Section 3). The secondary waste storage tanks and ETF tanker loadout station are located north of the OGTS fan/Stack assembly. Tank construction will meet the requirements of WAC 173-303-640 and will be equipped with freeze protection consistent with Performance Category-2 (ambient temperature of 34°C [30°F]). The secondary waste pump skid is located just south of the secondary waste storage tanks and east of the OGTS Stack and fan assembly. The loadout station is depicted on P&ID F-145579-37-A-0100 located in Attachment KK, Appendix 4, Section 3. The spill confinement berm for the tanker truck is designed specifically for the purpose of confining spills that might occur during tanker loading operation. The loadout station is depicted on P&ID F-145579-37-A-0100 located in Attachment KK, Appendix 4, Section 3.

Table 4-5. Liquid Secondary Wastes

Waste	Source	Frequency of Generation	Pollutants
Washdown Water	Equipment Cleaning, Spill Remediation	Recurring (Equipment Cleaning) Infrequent (Spill Remediation)	Particulate Matter, Radionuclides, Caustic (high pH) Solution
Boiler Blowdown	Boiler Maintenance	Infrequent	Particulate Matter, Boiler Antifouling Agents, Surfactants
Mixer/Dryer Condensate,	Mixer/Dryer Offgas Condenser, Mist Eliminator Operation	Recurring (Scheduled Holding Tank Discharge)	, Radionuclides
Scrubber System Blowdown or Bleed	Main Offgas Treatment System Operation	Recurring (Scheduled Scrubber Holding Tank Blowdown) Continuous (Scrubber Holding Tank Bleed)	Particulate Matter, Radionuclides, Caustic (high pH) Solution, Dissolved Inorganic Gases, Dissolved Acid Gases, Organic Compounds

4.3.3 Solid/Semisolid Secondary Waste Streams

The Test and Demonstration Facility will produce the solid, semisolid, or sludge secondary wastes noted in Table 4-6. Unless otherwise stated, these wastes will be collected on a scheduled basis and disposed in permitted facilities. Wastes that will routinely be returned to process use, such as spilled nonhazardous process additives, are not included in this list.

Table 4-6. Solid/Semisolid Secondary Wastes

Waste	Source	Frequency of Generation	Pollutants
Spent Carbon Filters	Main Offgas Treatment System	Scheduled or Upon Detection of Pollutant Breakthrough	Particulate Matter, Radionuclides, Organic Compounds
Spent HEPA Filters	Mixer/Dryer Offgas Treatment System, Main Offgas Treatment System, ICV® Purge Air Inlet	Scheduled	Particulate Matter, Radionuclides, Organic Compounds
Spent SCR Catalyst	Main Offgas Treatment System	Scheduled or Upon Detection of Catalyst Fouling/Poisoning	Particulate Matter, Radionuclides, Organic Compounds
Scrubber Tank Sludge	Main Offgas Treatment System	Scheduled or Upon Detection of Excessive Buildup	Inorganic Solids, Water Containing High or Low pH Inorganic Compounds, Radionuclides, Caustic (high pH) Solution, Organic Compounds
Used Personal Protective Equipment	Equipment Cleanup, Maintenance, and Operation	Recurring	Particulate Matter, Radionuclides
Failed/Damaged Equipment	Equipment Cleanup, Maintenance, and Operation	Recurring	Particulate Matter, Radionuclides

TABLE IV.1.

DEMONSTRATION BULK VITRIFICATION SYSTEM (DBVS) FACILITY TANK SYSTEMS DESCRIPTION

Dangerous and/or Mixed Waste Tank Systems Name	System Designation and Equipment Number	Engineering Description (Drawing No., Specification No., etc.)[b]	Narrative Description, Table & Figures	Maximum Capacity (gallons)
Waste and Simulant Staging Tank	WRS-Tanks RESERVED	RESERVED	Sections 2.3.2 and 4.2.3; Table 2-1; Figures 2-3, 2-4, and Figure B-7	1,000
Waste and Simulant Staging Tanks #1 #2 #3 #4	DBVS-Tanks 32-D74-002 32-D74-003 32-D74-016 RESERVED	Permit Attachment KK, Appendix 2, Section 2, Drawing #s: DBVS-SK-M105 and F-145579-00-P-0005, Section 5, Specification #: F-145579-D-SP-028.	Sections 2.3.2 and 4.2.2.2; Table 2-1; Figures 2-2 and B-1	 18,000 18,000 18,000 18,000
Receiver Tank From Bottom of Dryer	DBVS-Tanks	RESERVED	RESERVED	RESERVED
Dry Waste Receiver Units #1 #2	DBVS-Tanks 33-D64-088 33-D64-089	Permit Attachment LL, Appendix 5, Section 3, Drawings # DBVS-SK-M107, Sheets 2 & 3., Permit Attachment KK, Appendix 5, Section 5 Specification # 145579-D-SP-032	Sections 2.3.3 and 4.2.8 and Figure B-1	RESERVED

Dryer Condensate Tanks	DBVS-Tanks 37-D74-009 37-D74-010	Permit Attachment KK, Appendix 4, Section 3, Drawing F-145579-37-A-0101; Section 5, Specification 145570-D-SP-031	Sections 2.6 and 4.3.2; Table 4-5; Figures 2-2, B-1, and B-4	Dryer Condensate: 18,000 18,000
Dryer Offgas Condensate Tank	DBVS-Tanks 33-D74-015 33-D74-033	Permit Attachment KK, Appendix 3, Section 3, Drawing F-145579-33-A-0101; Section 5, Specification 145579-D-SP-006	Figure B-1 and B-4	500
Venturi Scrubber System (VSS) #1 ~~#2~~	DBVS Tank 36-D74-052 ~~36-D74-054~~	Permit Attachment LL, Appendix 7, Section 3, Drawing # F-145579-36-A-0100, Section 5, Specification 145579-V-SP-037	Sections 2 and 4; Figures B-2 and B-5	690 ~~690~~

Venturi Scrubber System (VSS) Bleed Tanks #1 ~~#2~~	DBVS -Tanks 37-D74-011 ~~37-D74-012~~	Permit Attachment KK, Appendix 4, Section 3, Drawing F-145579-37-A-0101; Section 5, Specification 145570-D-SP-031	Section 4.2.15; Figures 2-2, B-2, and B-5	18,000 ~~18,000~~
~~Tri-Mer Effluent~~ ~~#1~~ ~~#2~~ ~~#3~~ ~~#4~~ ~~#5~~ ~~#6~~	~~DBVS Tanks~~ ~~37-D74-013~~ ~~37-D74-014~~ ~~RESERVED[1]~~ ~~RESERVED[1]~~ ~~RESERVED[1]~~ ~~RESERVED[1]~~	~~Permit Attachment KK, Appendix 4, Section 3, Drawing F-145579-37-A-0101; Section 5, Specification 145570-D-SP-031~~	~~Sections 2.6 and 4.2.15; Figures 2-2, B-3, and B-6~~	~~18,000~~ ~~18,000~~ ~~18,000~~ ~~18,000~~ ~~18,000~~ ~~18,000~~
~~NH3 Scrubber Effluent/Bleed Tank~~	~~DBVS Tank RESERVED[1]~~	~~RESERVED~~	~~Figure B-3~~	~~2,000~~
~~Tri-Mer Bleed Sump Tank~~	~~RESERVED[1]~~	~~RESERVED~~	~~RESERVED~~	~~RESERVED~~

TABLE IV.2.

DEMONSTRATION BULK VITRIFICATION SYSTEM (DBVS) FACILITY TANK SYSTEMS SECONDARY CONTAINMENT SYSTEMS INCLUDING SUMPS AND FLOOR DRAINS

Sump/Floor Drain I.D. No. & Room Location	Maximum Sump Capacity (gallons)	Sump Dimensions (feet) & Materials of Construction	Engineering Description (Drawing No., Specification No., etc.)
WRS Pump Skid, Sample Room	RESERVED	RESERVED	Permit Attachment KK, Appendix 2, Section 2, Drawing # DBVS-SK-M101. Section 5, Specification 145579-D-SP-027
Pump Skid, Equipment Room	RESERVED	RESERVED	Permit Attachment KK, Appendix 2, Section 2, Drawing # DBVS-SK-M101, Section 5, Specification 145579-D-SP-027
Waste Receipt Tanks: 32-D74-002 32-D74-003 32-D74-016	RESERVED	RESERVED	Permit Attachment KK, Appendix 2, Section 2, Drawing # DVBS-SK-M105, Section 5, Specification: 145579-D-SP-028

Secondary Waste System Pump Skid	RESERVED	RESERVED	Permit Attachment KK, Appendix 4, Section 3, Drawing F-145579-37-A-0100, Section 5, Specification 145579-D-SP-011
Secondary Waste Tanks Dryer Condensate 37-D74-009 37-D74-010	RESERVED	RESERVED	Permit Attachment KK, Appendix 4, Section 3, Drawing F-145579-37-A-0101; Section 5, Specification 145570-D-SP-031
Venturi Scrubber Bleed 37-D74-011 ~~37-D74-012~~	RESERVED	RESERVED	Permit Attachment KK, Appendix 4, Section 3, Drawing F-145579-37-A-0101; Section 5, Specification 145570-D-SP-031
~~Tri-Mer 37-D74-013 37-D74-014~~	~~RESERVED~~	~~RESERVED~~	~~Permit Attachment KK, Appendix 4, Section 3, Drawing F-145579-37-A-0101; Section 5, Specification 145570-D-SP-031~~

Waste Dryer Off-gas Condensate Tank 33-D74-015 33-D74-033	RESERVED	RESERVED	Permit Attachment KK, Appendix 3, Section 3, Drawing F-145579-33-A-0101; Section 5, Specification 145579-D-SP-006.
Scrubber Tank 36-D74-052	RESERVED	RESERVED	Permit Attachment LL, Appendix 7, Section 3, Drawing F-145579-36-A-0100, Specification 145579-D-SP-037

TABLE IV.3.

DEMONSTRATION BULK VITRIFICATION SYSTEM (DBVS) FACILITY TANK SYSTEMS PROCESS AND LEAK DETECTION SYSTEM INSTRUMENTS AND PARAMETERS

Sub-system Locator and Name (including P&ID)	Control Parameter	Type of Measuring or Leak Detection Instrument	Location of Measuring Instrument (Tag No.)	Instrument Range	Failure State	Expected Range	Instrument Accuracy	Instrument Calibration Method No. and Range
Pump Skid Equipment Room Sump Level Indication F-145579-32-A-0100	Level	TT-Mini-Probe	32-LSH-011	RESERVED	RESERVED	RESERVED	RESERVED	RESERVED
Pump Skid Sample Room Sump Level Indication F-145579-32-A-0100	Level	TT-Mini-Probe	32-LSH-032	RESERVED	RESERVED	RESERVED	RESERVED	RESERVED
Waste Receipt Tanks: 32-D74-002 32-D74-003 32-D74-016 F-145579-32-A-0101	Level	TT-Mini-Probe	32-LSH-103 32-LSH-203 32-LSH-303	RESERVED	RESERVED	RESERVED	RESERVED	RESERVED
Secondary Waste Pump Skid	Level	TT-Mini-Probe	37-LSH-007	RESERVED	RESERVED	RESERVED	RESERVED	RESERVED
Scrubber Tank	Level	TT-Mini-Probe	37-LSH-123	RESERVED	RESERVED	RESERVED	RESERVED	RESERVED
Secondary Waste Tanks Dryer Condensate 37-D740009 37-D74-010	Level	TT-Mini-Probe	37-LSH-103 37-LSH-203	RESERVED	RESERVED	RESERVED	RESERVED	RESERVED
Venturi Scrubber Bleed 37-D74-011 37-~~D74-012~~	Level	TT-Mini-Probe	37-LSH-303 ~~37-LSH-403~~	RESERVED	RESERVED	RESERVED	RESERVED	RESERVED

Sub-system Locator and Name (including P&ID)	Control Parameter	Type of Measuring or Leak Detection Instrument	Location of Measuring Instrument (Tag No.)	Instrument Range	Failure State	Expected Range	Instrument Accuracy	Instrument Calibration Method No. and Range
~~TriMer 37-D74-013 37-D74-014~~	~~Level~~	~~TT-Mini-Probe~~	~~37-LSH-503 37-LSH-603~~	~~RESERVED~~	~~RESERVED~~	~~RESERVED~~	~~RESERVED~~	~~RESERVED~~
Waste Dryer Off-gas Condensate Tank Level 33-D74-015 33-D74-033	Level	TT-Mini-Probe	33-LIT-017	RESERVED	RESERVED	RESERVED	RESERVED	RESERVED

TABLE V.1.

DEMONSTRATION BULK VITRIFICATION SYSTEM (DBVS) - PHASE 1 DESCRIPTION FOR NON-MAJOR COMPONENTS (E.G., PUMPS, FILTERS, FANS, COMPRESSORS, ETC. NOT SPECIFICALLY LISTED)

Sub-system Description	Sub-system Designation	Engineering Description (Drawing No., Specification No., etc.)	Narrative Description, Tables and Figures	Maximum Capacity (gallons)
Control system for feed from the Waste & Simulant Staging Tanks to Waste Dryer [a]* (Waste Transfer Pump Skid)	32-D58-007	RESERVED	Sections 2.3.2, 2.3.3, 4.2, 4.2.1, 4.2.2.1, 4.2.3, 4.2.4, 4.2.12, 4.2.17; Table 4-1; Figures 2-2, B-1, and B-4	N/A
Waste Dryer including: Dust Recycle Feed to Dryer [a] Waste Dryer Sintered Metal Filter Waste Dryer HEPA Filter	33-D25-006 00-A-0016 33-NO2-014 33-NO2-017	Permit Attachment LL; Appendix 3; Section 3, Drawing F-145579-33-A-0100; Section 5, Specification 145579-D-SP-006	Sections 2.3.3, 4.2, 4.2.1, 4.2.8, 4.2.12, 4.2.14, 4.2.15, 4.2.17; Tables 4-1, 4-5; Figures 2-2, B-1, B-2, B-4, and B-5	2645 NA
Waste Drying System including: Control system for clean soil feed to dryer [a]* The waste dryer steam supply control system [a]* Control System for glass former additives feed to dryer[a*]	33-D58-068	Permit Attachment LL, Appendix 3, Section 3, Drawings F-145579-31-A-0101, F-145579-33-A-0100 & F-145579-33-A-0105; Section 5, Specifications 145579-D-SP-006 & 145579-D-SP-007	Sections 2.3.3, 4.2, 4.2.1, 4.2.8, 4.2.12, 4.2.14, 4.2.15, 4.2.17; Tables 4-1, 4-5; Figures 2-2, B-1, and B-4	N/A

Sub-system Description	Sub-system Designation	Engineering Description (Drawing No., Specification No., etc.)	Narrative Description, Tables and Figures	Maximum Capacity (gallons)
DRYER OFFGAS TREATMENT SYSTEM				
Dryer Offgas Condenser including: Condenser chilled water feed control system [a]*	33-D10-005	Permit Attachment LL, Appendix 3, Section 3, Drawing F-145579-33-A-0101; Section 5, Specification 145579-D-SP-006	Sections 4.2.14, 4.2.17; Tables 4-2, 4-3, 4-5; Figures 2-2, B-1, and B-4	NA
DRIED WASTE HANDLING SYSTEM				
Dry Waste Receiver Unit Sintered Metal Filters #1 and #2	33-NO2-101 33-NO2-102	Permit Attachment LL, Appendix 5, Section 3, Drawing F-145579-33-A-0106,	Sections 2.3.3, and 4.2.8	NA
Dry Waste HEPA Filters No. 1 and No. 2	33-NO2-097 33-NO2-098	Permit Attachment LL, Appendix 5, Section 3, Drawing F-145579-33-A-0106	Sections 2.3.3, and 4.2.8	NA
ICV® STATIONS				
Vitrification Container Preparation*	NA	Permit Attachment LL, Appendix 6, Section 3, Drawing # F-145579-35-D-0018	Sections 4.2.9, 4.2.17; Tables 4-1, 4-5; Figures 2-2 and B-1	N/A
ICV® System (Container Waste Fill, ICV® Melt & Vented Cooling) including: Dry waste feed control system [a]	33-D64-088 33-D64-089	Permit Attachment LL, Appendix 6, Section 3, Drawings F-145579-33-A-0100, F-145579-33-A-0101 & F-145579-33-A-0106, Section 5, Specifications 145579-D-SP-017, 145579-D-SP-018.	Section 2.2.1, 4.2.11, 4.2.12, 4.2.17; Table 4-1; Figures 2-2, B-1, and B-4	N/A

Sub-system Description	Sub-system Designation	Engineering Description (Drawing No., Specification No., etc.)	Narrative Description, Tables and Figures	Maximum Capacity (gallons)
Top-off, and Container Sealing including: Top-off soil feed control system [a]*	31-D74-007, 31-D74-008, 31-D74-009	Permit Attachment LL, Appendix 5, Section 3, Drawings F-145579-31-A-0100 & F-145579-34-A-0101, Section 5, Specifications 145579-D-DS-055.1 & 145579-D-SP-018	Section 2.2.1, 4.2.11, 4.2.12, 4.2.17; Table 4-1; Figures 2-2, B-1, and B-4	N/A
Transport to Storage Pad (Sample Point)*	35-D48-003	Permit Attachment LL, Appendix 6, Section 5, Specification 145579-D-DS-012.1	Section 2.2.1, 4.2.11; Figures 2-2, B-1, and B-4	N/A
MAIN OFFGAS TREATMENT SYSTEM				
Sintered Metal Filter #1	36-N02-019	Permit Attachment LL, Appendix 7, Section 3, Drawing # F-145579-36-A-0099, Section 5, Specification 145579-V-SP-002	Sections 4.2.12, 4.2.15, 4.2.17; Table 4-2; Figures B-2 and B-5	N/A
Sintered Metal Filter #2	36-N02-020	Permit Attachment LL, Appendix 7, Section 3, Drawing # F-145579-36-A-0099, Section 5, Specification 145579-V-SP-002	Sections 4.2.12, 4.2.15, 4.2.17; Table 4-2; Figures B-2 and B-5	N/A
Venturi Scrubber System (VSS)-1 Packed Tower Quencher #1	36-N83-034	Permit Attachment LL, Appendix 7, Section 3, Drawing # F-145579-36-A-0100, Section 5, Specification 145579-D-SP-037	Sections 4.2.4, 4.2.12, 4.2.15, 4.2.17; Tables 4-1, 4-3; Figures B-2 and B-5	RESERVED

Sub-system Description	Sub-system Designation	Engineering Description (Drawing No., Specification No., etc.)	Narrative Description, Tables and Figures	Maximum Capacity (gallons)
VSS-1 Scrubber Feed System Tank #1[a]* includes: Caustic make-up feed control system [a]*	36-D74-052	Permit Attachment LL, Appendix 7, Section 3, Drawing # F-145579-36-A-0100, Section 5, Specification # 145579-S-SP-037	Sections 4.2.4, 4.2.6, 4.2.12, 4.2.15, 4.2.17; Table 4-5; Figures B-2 and B-5	N/A
VSS-1 Heat Exchanger #1 includes: Chilled water feed control system [a]*	36-D30-046	Permit Attachment LL, Appendix 7, Section 3, Drawing # F-145579-36-A-0100, Section 5, Specification # 145579-S-SP-037	Figures B-2 and B-5	RESERVED
VSS -1 Scrubber #1	36-N73-035	Permit Attachment LL, Appendix 7, Section 3, Drawing # F-145579-36-A-0100, Section 5, Specification # 145579-S-SP-037	Sections 4.2.4, 4.2.12, 4.2.15, 4.2.17; Tables 4-1, 4-2, 4-4, 4-5; Figures B-2 and B-5	RESERVED
VSS-1 Mist Eliminator #1	36-N24-036	Permit Attachment LL, Appendix 7, Section 3, Drawing # F-145579-36-A-0100, Section 5, Specification # 145579-S-SP-037	Sections 4.2.15, 4.2.17; Tables 4-1, 4-2, 4-3; Figures B-2 and B-5	N/A
~~**Venturi Scrubber System (VSS) 2**~~ ~~Quencher #2~~	~~36-N83-037[+]~~	~~RESERVED~~	~~Sections 4.2.4, 4.2.12, 4.2.15, 4.2.17; Tables 4-1, 4-2, 4-3; Figures B-2 and B-5~~	~~RESERVED~~

Sub-system Description	Sub-system Designation	Engineering Description (Drawing No., Specification No., etc.)	Narrative Description, Tables and Figures	Maximum Capacity (gallons)
~~VSS-2~~ ~~Scrubber Tank Feed System #2[a]* includes:~~ ~~Caustic make-up feed control system[a]*~~	~~36-D74-054[+]~~	~~RESERVED~~	~~Sections 4.2.4, 4.2.6, 4.2.12, 4.2.15, 4.2.17; Table 4-5; Figures B-2 and B-5~~	~~N/A~~
~~VSS-2~~ ~~Heat Exchanger #2 includes:~~ ~~Chilled water feed control system[a]*~~	~~36-D30-047[+]~~	~~RESERVED~~	~~Figures B-2 and B-5~~	~~RESERVED~~
~~VSS-2~~ ~~Scrubber #2~~	~~36-N73-038[+]~~	~~RESERVED~~	~~Sections 4.2.4, 4.2.12, 4.2.15, 4.2.17, 4.3; Tables 4-1, 4-2, 4-4, 4-5; Figures B-2 and B-5~~	~~RESERVED~~
~~VSS-2~~ ~~Mist Eliminator #2~~	~~36-N24-039[+]~~	~~RESERVED~~	~~Sections 4.2.15, 4.2.17; Figures B-2 and B-5~~	~~N/A~~
Scrubber Condenser	36-D10-040	Permit Attachment LL, Appendix 7, Section 3, Drawing # F-145579-36-A-0102, Section 5, Specification 145579-D-SP-037	Figures B-2 and B-5	N/A
Mist Eliminator #3	36-N24-041	Permit Attachment LL, Appendix 7, Section 3, Drawing # F-145579-36-A-0102, Section 5, Specification 145579-D-SP-037	Figures B-2 and B-5	N/A

Sub-system Description	Sub-system Designation	Engineering Description (Drawing No., Specification No., etc.)	Narrative Description, Tables and Figures	Maximum Capacity (gallons)
HEPA Filter Heater*	36-N84-042	Permit Attachment LL, Appendix 7, Section 3, Drawing # F-145579-36-A-0102, Section 5, Specification 145579-D-SP-036	Sections 4.2.6, 4.2.12, 4.2.15, 4.2.17, 4.3; Tables 4-2, 4-3, 4-5, 4-6; Figures 2-2 and B-2	N/A
HEPA Filters #1 #2 #3 #4	 36-N02-114A 36-NO2-114B 36-NO2-114C 36-NO2-114D	Permit Attachment LL, Appendix 7, Section 3, Drawing # F-145579-36-A-0107, Section 5, Specification 145579-D-SP-036	Sections 4.2.12, 4.2.15, 4.2.17; Tables 4-2, 4-6; Figures B-2 and B-5	N/A
Carbon Filter #1 #2	 36-NO2-064 36-NO2-106	Permit Attachment LL, Appendix 7, Section 3, Drawing # F-145579-36-A-0107, Section 5, Specification 145579-V-SP-010	Sections 4.2.12, 4.2.15, 4.2.17, 4.3.3; Tables 4-2, 4-6; Figures 2-2, B-2, and B-5	N/A
Offgas Polishing Filter	36-NO2-79	Permit Attachment LL, Appendix 7, Section 3, Drawing # F-145579-36-A-0107, Section 5, Specification 145579-V-SP-010	Figures 2-2 and B-3	N/A
~~Tri-Mer Quencher includes:~~ ~~Water feed control system~~[+]~~*~~	~~36-N83-068~~[+]	~~RESERVED~~	~~Sections 4.2.4, 4.2.6, 4.2.12, 4.2.15, 4.2.17, 4.3; Tables 4-1, 4-2, 4-5; Figures 2-2, B-3, and B-6~~	~~RESERVED~~

Sub-system Description	Sub-system Designation	Engineering Description (Drawing No., Specification No., etc.)	Narrative Description, Tables and Figures	Maximum Capacity (gallons)
~~Tri-Mer OX1 Tower including:~~ ~~H_2SO_4 feed control system~~[a]※ ~~$NaClO_2$ feed control system~~[a]※	~~36-D77-069~~	~~RESERVED~~	~~Sections 4.2.4, 4.2.6, 4.2.12, 4.2.15, 4.2.17, 4.3;~~ ~~Tables 4-1, 4-2, 4-5;~~ ~~Figures 2-2, B-3, and B-6~~	~~RESERVED~~
~~Tri-Mer RC1 Tower & RC1 Tower Sump including:~~ ~~Na_2S feed control system~~[a]※ ~~NaOH feed control system~~[a]※	~~36-D77-070~~ ~~36-D74-074~~	~~RESERVED~~ ~~RESERVED~~	~~Sections 4.2.4, 4.2.6, 4.2.12, 4.2.15, 4.2.17, 4.3;~~ ~~Tables 4-1, 4-2, 4-5;~~ ~~Figures 2-2, B-3, and B-6~~	~~RESERVED~~
~~Tri-Mer OX2 Tower including:~~ ~~H_2SO_4 feed control system~~[a]※ ~~$NaClO_2$ feed control system~~[a]※	~~36-D77-071~~	~~RESERVED~~	~~Sections 4.2.4, 4.2.6, 4.2.12, 4.2.15, 4.2.17, 4.3;~~ ~~Tables 4-1, 4-2, 4-5;~~ ~~Figures 2-2, B-3, and B-6~~	~~RESERVED~~
~~Tri-Mer RC2 Tower & RC2 Tower Sump including:~~ ~~Na_2S feed control system~~[a]※ ~~NaOH feed control system~~[a]※	~~36-D77-072~~ ~~36-D74-075~~	~~RESERVED~~ ~~RESERVED~~	~~Sections 4.2.4, 4.2.6, 4.2.12, 4.2.15, 4.2.17, 4.3;~~ ~~Tables 4-1, 4-2, 4-5;~~ ~~Figures 2-2, B-3, and B-6~~	~~RESERVED~~

Sub-system Description	Sub-system Designation	Engineering Description (Drawing No., Specification No., etc.)	Narrative Description, Tables and Figures	Maximum Capacity (gallons)
~~Tri-Mer CC Tower & CC Tower Sump including:~~ ~~NaOH feed control system[a]*~~	~~36-D77-073~~ ~~36-D74-076~~	~~RESERVED~~ ~~RESERVED~~	~~Sections 4.2.4, 4.2.6, 4.2.12, 4.2.15, 4.2.17, 4.3; Tables 4-1, 4-2, 4-5; Figures 2-2, B-3, and B-6~~	~~RESERVED~~
SCR Heater*	36-N84-078A 36-N84-078B	Permit Attachment LL, Appendix 7, Section 3, Drawing # F-145579-36-A-0103, Section 5, Specification 145579-V-SP-001	Sections 4.2.4, 4.2.6, 4.2.7, 4.2.12, 4.2.15, 4.2.17, 4.3; Tables 4-1, 4-2, 4-5, 4-6; Figures 2-2, B-3, and B-6	N/A
SCR Catalyst Bed including: Ammonia feed control system[a]*	36-D59-003	Permit Attachment LL, Appendix 7, Section 3, Drawing # F-145579-36-A-0103, Section 5, Specification 145579-V-SP-001	Sections 4.2.4, 4.2.6, 4.2.7, 4.2.12, 4.2.15, 4.2.17, 4.3; Tables 4-1, 4-2, 4-5, 4-6; Figures 2-2, B-3, and B-6	N/A
SCR Heat Exchanger*	36-D30-077	Permit Attachment LL, Appendix 7, Section 3, Drawing # F-145579-36-A-0103, Section 5, Specification 145579-V-SP-001	Sections 4.2.4, 4.2.6, 4.2.7, 4.2.12, 4.2.15, 4.2.17, 4.3; Tables 4-1, 4-2, 4-5, 4-6; Figures 2-2, B-3, and B-6	N/A
~~Ammonia scrubber including:~~ ~~Dilute H2SO4 feed control system[a]*~~	~~RESERVED[+]~~	~~RESERVED~~	~~Figures B-3 and B-6~~	~~N/A~~

Sub-system Description	Sub-system Designation	Engineering Description (Drawing No., Specification No., etc.)	Narrative Description, Tables and Figures	Maximum Capacity (gallons)
OGTS Emergency Bypass HEPA Filters	36-NO2-131 36-NO2-133	Permit Attachment LL, Appendix 7, Section 3, Drawing # F-1445579-36-A-0108, Section 5, Specification 145579-V-SP-017	Section 4.2.15	NA
Offgas Exhaust Stack*	36-N26-024	Permit Attachment LL, Appendix 7, Section 3, Drawing # F-145579-36-A-0105, Section 5, Specification 145579-V-SP-005	Section 4.2.12, 4.2.17; Figures 2-2, B-3, and B-6	N/A

[a] These subsystems only include feed control system components, with the exception of the boiler, which only includes the steam control system for the dryer. No substitution of terms as referenced in Permit Conditions II.G.2.e. and V. are to be made in this Permit for these subsystems.

* No substitution of terms as referenced in Permit Conditions II.G.2.e. and V. are to be made in this Permit for these subsystems.

N/A means no secondary containment required

TABLE V.4.

DEMONSTRATION BULK VITRIFICATION SYSTEM (DBVS) - PHASE 2 DESCRIPTION FOR NON-MAJOR COMPONENTS (E.G., PUMPS, FILTERS, FANS, COMPRESSORS, ETC NOT SPECIFICALLY LISTED)

Sub-system Description	Sub-system Designation	Engineering Description (Drawing No., Specification No., etc.)	Narrative Description, Tables and Figures	Maximum Capacity (gallons)
Control system for feed from the Waste & Simulant Staging Tanks to Waste Dryer [a]* (Waste Transfer Pump Skid)	32-D58-007	RESERVED	Sections 2.3.2, 2.3.3, 4.2, 4.2.1, 4.2.2.1, 4.2.3, 4.2.4, 4.2.12, 4.2.17; Table 4-1; Figures 2-2, B-1, and B-4	N/A
Waste Dryer including: Dust Recycle Feed to Dryer [a] Waste Dryer Sintered Metal Filter Waste Dryer HEPA Filter	33-D25-006 00-A-0016 33-NO2-014 33-NO2-017	Permit Attachment LL; Appendix 3; Section 3, Drawing F-145579-33-A-0100; Section 5, Specification 145579-D-SP-006	Sections 2.3.3, 4.2, 4.2.1, 4.2.8, 4.2.12, 4.2.14, 4.2.15, 4.2.17; Tables 4-1, 4-5; Figures 2-2, B-1, B-2, B-4, and B-5	2645 NA
Waste Drying System including: Control system for clean soil feed to dryer [a]* The waste dryer steam supply control system [a]* Control System for glass former additives feed to dryer[a]*	33-D58-068	Permit Attachment LL, Appendix 3, Section 3, Drawings F-145579-31-A-0101, F-145579-33-A-0100 & F-145579-33-A-0105; Section 5, Specifications 145579-D-SP-006 & 145579-D-SP-007	Sections 2.3.3, 4.2, 4.2.1, 4.2.8, 4.2.12, 4.2.14, 4.2.15, 4.2.17; Tables 4-1, 4-5; Figures 2-2, B-1, and B-4	N/A

Sub-system Description	Sub-system Designation	Engineering Description (Drawing No., Specification No., etc.)	Narrative Description, Tables and Figures	Maximum Capacity (gallons)
DRYER OFFGAS TREATMENT SYSTEM				
Dryer Offgas Condenser including: Condenser chilled water feed control system [a]*	33-D10-005	Permit Attachment LL, Appendix 3, Section 3, Drawing F-145579-33-A-0101; Section 5, Specification 145579-D-SP-006	Sections 4.2.14, 4.2.17; Tables 4-2, 4-3, 4-5; Figures 2-2, B-1, and B-4	NA
DRIED WASTE HANDLING SYSTEM				
Dry Waste Receiver Unit Sintered Metal Filters #1 and #2	33-NO2-101 33-NO2-102	Permit Attachment LL, Appendix 5, Section 3, Drawing F-145579-33-A-0106,	Sections 2.3.3, and 4.2.8	NA
Dry Waste HEPA Filters No. 1 and No. 2	33-NO2-097 33-NO2-098	Permit Attachment LL, Appendix 5, Section 3, Drawing F-145579-33-A-0106	Sections 2.3.3, and 4.2.8	NA
ICV® STATIONS				
Vitrification Container Preparation*	NA	Permit Attachment LL, Appendix 6, Section 3, Drawing # F-145579-35-D-0018	Sections 4.2.9, 4.2.17; Tables 4-1, 4-5; Figures 2-2 and B-1	N/A
ICV® System (Container Waste Fill, ICV® Melt & Vented Cooling) including: Dry waste feed control system [a]	33-D64-088 33-D64-089	Permit Attachment LL, Appendix 5, Section 3, Drawings F-145579-33-A-0100, F-145579-33-A-0101 & F-145579-33-A-0106, Section 5, Specifications 145579-D-SP-017, 145579-D-SP-018,	Section 2.2.1, 4.2.11, 4.2.12, 4.2.17; Table 4-1; Figures 2-2, B-1, and B-4	N/A

Sub-system Description	Sub-system Designation	Engineering Description (Drawing No., Specification No., etc.)	Narrative Description, Tables and Figures	Maximum Capacity (gallons)
Top-Off, and Container Sealing including: Top-off soil feed control system [a]*	31-D74-007, 31-D74-008, 31-D74-009	Permit Attachment LL, Appendix 5, Section 3, Drawings F-145579-31-A-0100 & F-145579-34-A-0101, Section 5, Specifications 145579-D-DS-055.1 & 145579-D-SP-018	Section 2.2.1, 4.2.11, 4.2.12, 4.2.17; Table 4-1; Figures 2-2, B-1, and B-4	N/A
Transport to Storage Pad (Sample Point)*	35-D-48-003	Permit Attachment LL, Appendix 6, Section 5, Specification 145579-D-DS-012.1	Section 2.2.1, 4.2.11; Figures 2-2, B-1, and B-4	N/A
MAIN OFFGAS TREATMENT SYSTEM				
Sintered Metal Filter #1	36-N02-019	Permit Attachment LL, Appendix 7, Section 3, Drawing # F-145579-36-A-0099, Section 5, Specification 145579-V-SP-002	Sections 4.2.12, 4.2.15, 4.2.17; Table 4-2; Figures B-2 and B-5	N/A
Sintered Metal Filter #2	36-N02-020	Permit Attachment LL, Appendix 7, Section 3, Drawing # F-145579-36-A-0099, Section 5, Specification 145579-V-SP-002	Sections 4.2.12, 4.2.15, 4.2.17; Table 4-2; Figures B-2 and B-5	N/A
Venturi Scrubber System (VSS)-1 Packed Tower Quencher #1	36-N83-034	Permit Attachment LL, Appendix 7, Section 3, Drawing # F-145579-36-A-0100, Section 5, Specification 145579-D-SP-037	Sections 4.2.4, 4.2.12, 4.2.15, 4.2.17; Tables 4-1, 4-3; Figures B-2 and B-5	RESERVED

Sub-system Description	Sub-system Designation	Engineering Description (Drawing No., Specification No., etc.)	Narrative Description, Tables and Figures	Maximum Capacity (gallons)
VSS-1 Scrubber Feed System Tank #1[a]* includes: Caustic make-up feed control system[a]*	36-D74-052	Permit Attachment LL, Appendix 7, Section 3, Drawing # F-145579-36-A-0100, Section 5, Specification # 145579-S-SP-037	Sections 4.2.4, 4.2.6, 4.2.12, 4.2.15, 4.2.17; Table 4-5; Figures B-2 and B-5	N/A
VSS-1 Heat Exchanger #1 includes: Chilled water feed control system[a]*	36-D30-046	Permit Attachment LL, Appendix 7, Section 3, Drawing # F-145579-36-A-0100, Section 5, Specification # 145579-S-SP-037	Figures B-2 and B-5	RESERVED
VSS -1 Scrubber #1	36-N73-035	Permit Attachment LL, Appendix 7, Section 3, Drawing # F-145579-36-A-0100, Section 5, Specification # 145579-S-SP-037	Sections 4.2.4, 4.2.12, 4.2.15, 4.2.17; Tables 4-1, 4-2, 4-4, 4-5; Figures B-2 and B-5	RESERVED
VSS-1 Mist Eliminator #1	36-N24-036	Permit Attachment LL, Appendix 7, Section 3, Drawing # F-145579-36-A-0100, Section 5, Specification # 145579-S-SP-037	Sections 4.2.15, 4.2.17; Tables 4-1, 4-2, 4-3; Figures B-2 and B-5	N/A
~~**Venturi Scrubber System (VSS)-2**~~ ~~Quencher #2~~	~~36-N83-037~~	~~RESERVED~~	~~Sections 4.2.4, 4.2.12, 4.2.15, 4.2.17;~~ ~~Tables 4-1, 4-2, 4-3;~~ ~~Figures B-2 and B-5~~	~~RESERVED~~

Sub-system Description	Sub-system Designation	Engineering Description (Drawing No., Specification No., etc.)	Narrative Description, Tables and Figures	Maximum Capacity (gallons)
~~VSS-2~~ ~~Scrubber Tank: Feed System #2[a]*~~ includes: ~~Caustic make-up feed control system[a]*~~	~~36-D74-054~~	~~RESERVED~~	~~Sections 4.2.4, 4.2.6, 4.2.12, 4.2.15, 4.2.17; Table 4-5; Figures B-2 and B-5~~	~~N/A~~
~~VSS-2~~ ~~Heat Exchanger #2 includes:~~ ~~Chilled water feed control system[a]*~~	~~36-D30-047~~	~~RESERVED~~	~~Figures B-2 and B-5~~	~~RESERVED~~
~~VSS-2~~ ~~Scrubber #2~~	~~36-N73-038~~	~~RESERVED~~	~~Sections 4.2.4, 4.2.12, 4.2.15, 4.2.17, 4.3; Tables 4-1, 4-2, 4-4, 4-5; Figures B-2 and B-5~~	~~RESERVED~~
~~VSS-2~~ ~~Mist Eliminator #2~~	~~36-N24-039~~	~~RESERVED~~	~~Sections 4.2.15, 4.2.17; Figures B-2 and B-5~~	~~N/A~~
Scrubber Condenser	36-D10-040	Permit Attachment LL, Appendix 7, Section 3, Drawing # F-145579-36-A-0102, Section 5, Specification 145579-D-SP-037	Figures B-2 and B-5	N/A
Mist Eliminator #3	36-N24-041	Permit Attachment LL, Appendix 7, Section 3, Drawing # F-145579-36-A-0102, Section 5, Specification 145579-D-SP-037	Figures B-2 and B-5	N/A

Sub-system Description	Sub-system Designation	Engineering Description (Drawing No., Specification No., etc.)	Narrative Description, Tables and Figures	Maximum Capacity (gallons)
HEPA Filter Heater*	36-N84-042	Permit Attachment LL, Appendix 7, Section 3, Drawing # F-145579-36-A-0102, Section 5, Specification 145579-D-SP-036	Sections 4.2.6, 4.2.12, 4.2.15, 4.2.17, 4.3; Tables 4-2, 4-3, 4-5, 4-6; Figures 2-2 and B-2	N/A
HEPA Filters #1 #2 #3 #4	 36-N02-114A 36-NO2-114B 36-NO2-114C 36-NO2-114D	Permit Attachment LL, Appendix 7, Section 3, Drawing # F-145579-36-A-0107, Section 5, Specification 145579-D-SP-036	Sections 4.2.12, 4.2.15, 4.2.17; Tables 4-2, 4-6; Figures B-2 and B-5	N/A
Carbon Filter #1 #2	 36-NO2-064 36-NO2-106	Permit Attachment LL, Appendix 7, Section 3, Drawing # F-145579-36-A-0107, Section 5, Specification 145579-V-SP-010	Sections 4.2.12, 4.2.15, 4.2.17, 4.3.3; Tables 4-2, 4-6; Figures 2-2, B-2, and B-5	N/A
Offgas Polishing Filter	36-NO2-79	Permit Attachment LL, Appendix 7, Section 3, Drawing # F-145579-36-A-0107, Section 5, Specification 145579-V-SP-010	Figures 2-2 and B-3	N/A
~~Tri-Mer Quencher includes:~~ ~~Water feed control system[a]*~~	~~36-N83-068[1]~~	~~RESERVED~~	~~Sections 4.2.4, 4.2.6, 4.2.12, 4.2.15, 4.2.17, 4.3; Tables 4-1, 4-2, 4-5; Figures 2-2, B-3, and B-6~~	~~RESERVED~~
~~Tri-Mer OX1 Tower including:~~ ~~H_2SO_4 feed control system[a]*~~ ~~$NaClO_2$ feed control system[a]*~~	~~36-D77-069~~	~~RESERVED~~	~~Sections 4.2.4, 4.2.6, 4.2.12, 4.2.15, 4.2.17, 4.3; Tables 4-1, 4-2, 4-5; Figures 2-2, B-3, and B-6~~	~~RESERVED~~

Sub-system Description	Sub-system Designation	Engineering Description (Drawing No., Specification No., etc.)	Narrative Description, Tables and Figures	Maximum Capacity (gallons)
~~Tri-Mer RC1 Tower & RC1 Tower Sump including:~~ ~~Na_2S feed control system[a]*~~ ~~NaOH feed control system[a]*~~	~~36-D77-070~~ ~~36-D74-074~~	~~RESERVED~~ ~~RESERVED~~	~~Sections 4.2.4, 4.2.6, 4.2.12, 4.2.15, 4.2.17, 4.3; Tables 4-1, 4-2, 4-5; Figures 2-2, B-3, and B-6~~	~~RESERVED~~
~~Tri-Mer OX2 Tower including:~~ ~~H_2SO_4 feed control system[a]*~~ ~~$NaClO_2$ feed control system[a]*~~	~~36-D77-071~~	~~RESERVED~~	~~Sections 4.2.4, 4.2.6, 4.2.12, 4.2.15, 4.2.17, 4.3; Tables 4-1, 4-2, 4-5; Figures 2-2, B-3, and B-6~~	~~RESERVED~~
~~Tri-Mer RC2 Tower & RC2 Tower Sump including:~~ ~~Na_2S feed control system[a]*~~ ~~NaOH feed control system[a]*~~	~~36-D77-072~~ ~~36-D74-075~~	~~RESERVED~~ ~~RESERVED~~	~~Sections 4.2.4, 4.2.6, 4.2.12, 4.2.15, 4.2.17, 4.3; Tables 4-1, 4-2, 4-5; Figures 2-2, B-3, and B-6~~	~~RESERVED~~
~~Tri-Mer CC Tower & CC Tower Sump including:~~ ~~NaOH feed control system[a]*~~	~~36-D77-073~~ ~~36-D74-076~~	~~RESERVED~~ ~~RESERVED~~	~~Sections 4.2.4, 4.2.6, 4.2.12, 4.2.15, 4.2.17, 4.3; Tables 4-1, 4-2, 4-5; Figures 2-2, B-3, and B-6~~	~~RESERVED~~
SCR Heater*	36-N84-078A 36-N84-078B	Permit Attachment LL, Appendix 7, Section 3, Drawing # F-145579-36-A-0103, Section 5, Specification 145579-V-SP-001	Sections 4.2.4, 4.2.6, 4.2.7, 4.2.12, 4.2.15, 4.2.17, 4.3; Tables 4-1, 4-2, 4-5, 4-6; Figures 2-2, B-3, B-6	N/A

Sub-system Description	Sub-system Designation	Engineering Description (Drawing No., Specification No., etc.)	Narrative Description, Tables and Figures	Maximum Capacity (gallons)
SCR Catalyst Bed including: Ammonia feed control system [a]*	36-D59-003	Permit Attachment LL, Appendix 7, Section 3, Drawing # F-145579-36-A-0103, Section 5, Specification 145579-V-SP-001	Sections 4.2.4, 4.2.6, 4.2.7, 4.2.12, 4.2.15, 4.2.17, 4.3; Tables 4-1, 4-2, 4-5, 4-6; Figures 2-2, B-3, and B-6	N/A
SCR Heat Exchanger*	36-D30-077	Permit Attachment LL, Appendix 7, Section 3, Drawing # F-145579-36-A-0103, Section 5, Specification 145579-V-SP-001	Sections 4.2.4, 4.2.6, 4.2.7, 4.2.12, 4.2.15, 4.2.17, 4.3; Tables 4-1, 4-2, 4-5, 4-6; Figures 2-2, B-3, and B-6	N/A
~~Ammonia scrubber including:~~ ~~Dilute H2SO4 feed control system [a]*~~	~~RESERVED~~	~~RESERVED~~	~~Figures B-3 and B-6~~	~~N/A~~
OGTS Emergency Bypass HEPA Filters	36-NO2-131 36-NO2-133	Permit Attachment LL, Appendix 7, Section 3, Drawing # F-1445579-36-A-0108, Section 5, Specification 145579-V-SP-017	Section 4.2.15	N/A
Offgas Exhaust Stack*	36-N26-024	Permit Attachment LL, Appendix 7, Section 3, Drawing # F-145579-36-A-0105, Section 5, Specification 145579-V-SP-005	Section 4.2.12, 4.2.17; Figures 2-2, B-3, and B-6	N/A

Sub-system Description	Sub-system Designation	Engineering Description (Drawing No., Specification No., etc.)	Narrative Description, Tables and Figures	Maximum Capacity (gallons)

[a] These subsystems only include feed control system components, with the exception of the boiler, which only includes the steam control system for the dryer. No substitution of terms as referenced in Permit Conditions II.G.2.e. and V. are to be made in this Permit for these subsystems.

* No substitution of terms as referenced in Permit Conditions II.G.2.e. and V. are to be made in this Permit for these subsystems.

N/A means no secondary containment required

Attachment 3
06-ESQ-099

RPP-CALC-29579, "Estimate of Organic Destruction Removal Efficiencies for the Demonstration Bulk Vitrification System for Tank 241-S-109 Feed," Revision 1, dated July 2006

CH2M-0601698

Enclosure 3

RPP-CALC-29579, "ESTIMATE OF ORGANIC DESTRUCTION REMOVAL EFFICIENCIES FOR THE DEMONSTRATION BULK VITRIFICATION SYSTEM FOR TANK 241-S-109 FEED," REV.2, DATED JULY, 2006

Consisting of 11 pages, including coversheet

ESTIMATE OF ORGANIC DESTRUCTION REMOVAL EFFICIENCIES FOR THE DEMONSTRATION BULK VITRIFICATION SYSTEM FOR TANK 241-S-109 FEED

T. H. May
CH2M HILL Hanford Group, Inc.
Richland, WA 99352
U.S. Department of Energy Contract DE-AC27-99RL14047

EDT/ECN: ECN-723991-R0 UC:
Cost Center: NF 7-20-06 Charge Code: 501907
B&R Code: Total Pages: 21

Key Words: DRE, DBVS, Supplemental Treatment

Abstract: The Organic Compound Destruction Removal Efficiency was estimated for the Demonstration Bulk Vitrification System (DBVS) based on ranges of efficiencies for removal of the various DBVS unit operations.

TRADEMARK DISCLAIMER. Reference herein to any specific commercial product, process, or service by trade name, trademark, manufacturer, or otherwise, does not necessarily constitute or imply its endorsement, recommendation, or favoring by the United States Government or any agency thereof or its contractors or subcontractors.

Printed in the United States of America. To obtain copies of this document, contact: Document Control Services, P.O. Box 950, Mailstop H6-08, Richland WA 99352, Phone (509) 372-2420; Fax (509) 376-4989.

JUL 20 2006
DATE:
STA: 15
HANFORD RELEASE
ID: 65

Nancy A. Fouad 7-20-06
Release Approval Date Release Stamp

Approved For Public Release

RPP-CALC-29579
Revision 2

ESTIMATE OF ORGANIC DESTRUCTION REMOVAL EFFICIENCIES FOR THE DEMONSTRATION BULK VITRIFICATION SYSTEM FOR TANK 241-S-109 FEED

T. H. May
CH2M-HILL Hanford Group, Inc.

Date Published
July 2006

CH2MHILL
Hanford Group, Inc.
Post Office Box 1500
Richland, Washington

Prepared for the U. S. Department of Energy
Assistant Secretary for Environmental Management

Project Hanford Management Contractor for the
U.S. Department of Energy under Contract DE-AC06-96RL13200

Approved for public release; distribution is unlimited

Calculation Review Checklist.

Calculation Reviewed: DRE Estimate for Processing tank 241-S-109 Through DBVS

Scope of Review: Entire
(e.g., document section or portion of calculation)

Engineer/Analyst: T.H. May *Thomas May* Date: 7/20/06

Organizational Manager: M.J. Sutev *Thomas May for MJS per telecon* Date: 7/20/06

This document consists of ___ pages and the following attachments (if applicable):

Yes	No	NA*		
[X]	[ ]	[ ]	1.	Analytical and technical approaches and results are reasonable and appropriate.
[X]	[ ]	[ ]	2.	Necessary assumptions are reasonable, explicitly stated, and supported.
[ ]	[ ]	[X]	3.	Ensure calculations that use software include a paper printout, microfiche, CD ROM, or other electronic file of the input data and identification to the computer codes and versions used, or provide alternate documentation to uniquely and clearly identify the exact coding and execution process.
[X]	[ ]	[ ]	4.	Input data were checked for consistency with original source information.
[X]	[ ]	[ ]	5.	For both qualitative and quantitative data, uncertainties are recognized and discussed.
[X]	[ ]	[ ]	6.	Mathematical derivations were checked, including dimensional consistency of results.
[X]	[ ]	[ ]	7.	Calculations are sufficiently detailed such that a technically qualified person can understand the analysis without requiring outside information.
[ ]	[ ]	[X]	8.	Software verification and validation are addressed adequately.
[X]	[ ]	[ ]	9.	Limits/criteria/guidelines applied to the analysis results are appropriate and referenced. Limits/criteria/guidelines were checked against references.
[X]	[ ]	[ ]	10.	Conclusions are consistent with analytical results and applicable limits.
[X]	[ ]	[ ]	11.	Results and conclusions address all points in the purpose.
[X]	[ ]	[ ]	12.	Referenced documents are retrievable or otherwise available.
[X]	[ ]	[ ]	13.	The version or revision of each reference is cited.
[X]	[ ]	[ ]	14.	The document was prepared in accordance with Attachment A, "Calculation Format and Preparation Instructions."
[X]	[ ]	[ ]	15.	Impacts on requirements have been assessed and change documentation initiated to incorporate revisions to affected documents, as appropriate.
[X]	[ ]	[ ]	16.	All checker comments have been dispositioned and the design media matches the calculations.

M.A. Fish *M.A. Fish* 7/20/06
Checker (printed name and signature) Date

CONTENTS

1.0 OBJECTIVE/PURPOSE 1

2.0 SUMMARY OF RESULTS AND CONCLUSIONS 1

3.0 INTRODUCTION/BACKGROUND 1

4.0 INPUT DATA 3

5.0 ASSUMPTIONS 12

6.0 METHOD OF ANALYSIS 13

7.0 RESULTS 14

8.0 CONCLUSIONS 14

9.0 RECOMMENDATIONS 14

10.0 REFERENCES 14

LIST OF TABLES

Table 4-1 Compounds of Concern 3

Table 4-2 S-109 Head Space Sampling Results 4

Table 4-3 Comparison of VOC/SVOC Properties 5

Table 4-4 Organic Removal Efficiencies 6

LIST OF FIGURES

Figure 3-1 Simplified Off-Gas Flow Diagram. 2

Title: Estimate of Organic Destruction DRE for DBVS Rev. 2
Originator: T.H. May 7/20/06 Date: 7/20/06
Checker: M. A. Fish 7/20/06 Date: 7/20/06
Organizational Manager: M.J. Sutey Date: 7/20/06

1.0 Objective/Purpose

The objective of this calculation is to estimate the organic compound Destruction+ Removal Efficiency (DRE) for the Demonstration Bulk Vitrification System (DBVS) while processing feed from tank 241-S-109.

2.0 Summary of Results and Conclusions

Calculations indicate that DBVS will meet the Resource Conservation and Recovery Act Dangerous and or Mixed Waste Research Design and Development (RD&D) Permit (Ecology 2004) requirement (permit condition V.1.6.f.i) of 99.99% DRE for organic compounds when processing waste from tank 241-S-109 feed.

3.0 Introduction/Background

The River Protection Project (RPP) mission is to safely store, retrieve, treat, immobilize, and disposing of the Hanford Site tank waste. The DBVS is permitted as a research and development project whose objective is to demonstrate the suitability of Bulk Vitrification for disposing of low-activity waste (LAW) from the Tank Farms.

The purpose of the Off-Gas Treatment System (OGTS) is to cool, filter, scrub, and chemically treat the In Container Vitrification (ICV) process off-gas, dryer off-gas, dry waste transfer motive air, and storage tank vent streams before the exhaust air fans discharge them through a monitored exhaust stack to atmosphere. A simplified flow diagram is provided in Figure 3-1.

The DBVS establishes a Performance Standard for DRE of 99.99% of the organic compounds in the waste.

Title: Estimate of Organic Destruction DRE for DBVS Rev. 2
Originator: T.H. May THM 7/20/06 Date: 7/20/06
Checker: M. A. Fish MAF Date: 7/20/06
Organizational Manager: M.J. Sutey Date: 7/20/06

Figure 3-1 Simplified Off-Gas Flow Diagram.

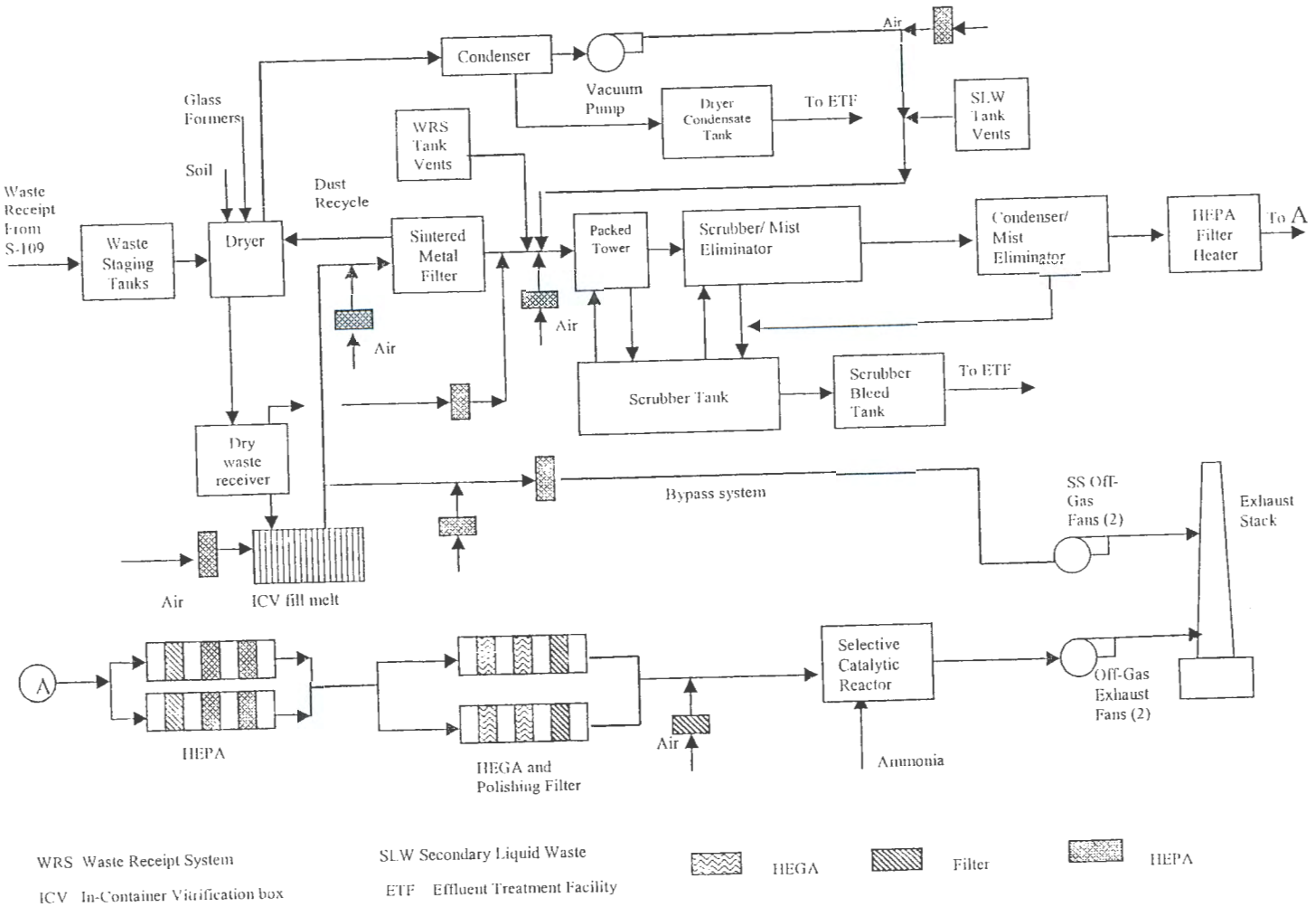

Title: Estimate of Organic Destruction DRE for DBVS Rev. 2
Originator: T.H. May THM — Date: 7/20/06
Checker: M. A. Fish MAF — Date: 7/20/06
Organizational Manager: M.J. Sutey — Date: 7/20/06

4.0 Input Data

The RD&D permit (table 6-1 presented in table 4-1 below) lists compounds of concern.

Table 4-1 Compounds of Concern

Compound	CAS #
Ethyl benzene	100-41-4
o-Dichlorobenzene	95-50-1
Methyl isobutyl ketone	108-10-1
Xylene	108-38-3
Toluene	108-88-3
Chlorobenzene	108-90-7
Cyclohexanone	108-94-1
Pyridine	110-86-1
Cresol	1319-77-3
Tetrachloroethylene	127-18-4
Ethyl acetate	141-78-6
Carbon tetrachloride	56-23-5
Ethyl ether	60-29-7
Methanol	67-56-1
Acetone	67-64-1
Benzene	71-43-2
1,1,1-Trichloroethane	71-55-6
Methylene chloride	75-09-2
n-Butyl alcohol	75-65-0
Isobutyl alcohol	78-83-1
2-Butanone	78-93-3
Trichloroethylene	79-01-6

Title: Estimate of Organic Destruction DRE for DBVS Rev. 2
Originator: T.H. May THM Date: 7/20/06
Checker: M. A. Fish MAF Date: 7/20/06
Organizational Manager: M.J. Sutey Date: 7/20/06

Table 4-1 Compounds of Concern	
Compound	CAS #
Nitrobenzene	98-95-3
1,1,2-Trichloro-1,2,2 trifluoroethane	
Trichloromonofluoromethane	

Data is not available for the organic content of the salt cake in S-109. Data is available for the head space of S-109. Based on TWINS sample analyses data base for headspace samples queried 6/26/06, two of the compounds listed in Table 4-1 were present in the headspace of S-109 in concentrations above the detection limit (see Table 4-2). This implies that DBVS may receive some methanol and 2-Butanone. A calculation of DRE for these compounds is presented below.

Table 4-2 S-109 Head Space Sampling Results			
2-Butanone (78-93-3)			
	Reported Value	Reporting Limit	Units
Headspace Sample	14	< 10	ppbv
Headspace Sample	12	< 10	ppbv
Headspace Sample	14	< 10	ppbv
Methanol (67-56-1)			
	Reported Value	Reporting Limit	Units
Headspace Sample	930	< 1.20E+02	ppbv
Headspace Sample	880	< 1.20E+02	ppbv
Headspace Sample	920	< 1.20E+02	ppbv

Title: Estimate of Organic Destruction DRE for DBVS Rev. 2
Originator: T.H. May THM Date: 7/20/06
Checker: M. A. Fish MAF Date: 7/20/06
Organizational Manager: M.J. Sutey Date: 7/20/06

Much data is available in the literature for Allyl Alcohol and Naphthalene removal efficiencies. Not as much data is available for the compounds listed in table 6-1 of the RD&D permit. By comparison of physical properties (Table 4-3), the removal efficiencies of methanol and 2-Butanone should be as good or better than Allyl Alcohol and calculations based on Allyl Alcohol should be bounding.

None of the SVOCs on the RD&D table 6-1 were detected in the S-109 head space sample. All of the SVOCs listed on the RD&D table 6-1 are aromatic compounds which should have comparable removal efficiencies to Naphthalene. A DRE calculation for Naphthalene is provided below.

Table 4-3 Comparison of VOC/SVOC Properties

Compound[1]	Boiling Point	Solubility in Water	Molecular Weight	Load Capacity Index[2]
Methanol	65 °C	Miscible	30	Good
2-Butanone	80 °C	29g/100g	72	Excellent
Allyl Alcohol	97 °C	Miscible	58	OK
Naphthalene	218 °C	Insoluble	128	Excellent
Chlorobenzene	132 °C	.05g/100g	113	Not listed
Nitrobenzene	211 °C	Insoluble	123	Not listed

1. From Material Safety Data Sheets
2. From http://www.aircleansystems.com/

Data input for the DRE calculation comes from a number of references and from the RD&D permit as shown in table 4-4.

Title: Estimate of Organic Destruction DRE for DBVS Rev. 2
Originator: T.H. May THM **Date: 7/20/06**
Checker: M. A. Fish MAF **Date: 7/20/06**
Organizational Manager: M.J. Sutey **Date: 7/20/06**

Table 4-4 Organic Removal Efficiencies

Unit Operation	Allyl Alcohol		Naphthalene		Reference	Comment
	Maximum Efficiency (%)	Minimum Expected Efficiency (%)	Maximum Efficiency (%)	Minimum Expected Efficiency (%)		
Dryer	0	0	50	50	RD&D Permit	
Dryer Condenser	90	70	90	70	EPA/452/B-02-001 EPA 456/R-01-004	The VOCs anticipated (Methanol, 2-Butanone, and Allyl Alcohol) are highly soluble in water and will be significantly removed in a 10 foot long tube-in-shell refrigerated condenser which is removing large quantities of water (45 gpm). Water is removed by the condenser at 99.8% efficiency and Allyl Alcohol will be removed at a comparable rate. The published range of operating efficiency for a refrigerated condenser is 50-90%. The anticipated removal efficiency for DBVS will be toward the high end of the range. The minimum expected efficiency is set at 70%. Naphthalene is a solid at the temperatures of the dryer and wet scrubber skid condensers (melting temperature 170 °F) and will also be removed in the DBVS condenser at rates comparable to

Title: Estimate of Organic Destruction DRE for DBVS Rev. 2
Originator: T.H. May THM Date: 7/20/06
Checker: M. A. Fish MAF Date: 7/20/06
Organizational Manager: M.J. Sutey Date: 7/20/06

Table 4-4 Organic Removal Efficiencies

Unit Operation	Allyl Alcohol		Naphthalene		Reference	Comment
	Maximum Efficiency (%)	Minimum Expected Efficiency (%)	Maximum Efficiency (%)	Minimum Expected Efficiency (%)		
						Allyl Alcohol.
ICV	N/A	N/A	97	45	GeoMelt Pesticides Treatment Technology Fact Sheet	Only the SVOC reach the ICV after processing through the dryer. In the ICV, the SVOCs will be destroyed by the high temperatures. GeoMelt performed vitrification of pesticides containing aromatic compounds (Naphthalene, Chlorobenzene, and Nitrobenzene are all aromatic compounds) and achieved DREs for the melt alone in excess of 97%. To be conservative, a low DRE of 45% was selected.
Sintered Metal Filter	0	0	0	0		
Packed Tower (Quencher)	99	80	99	80	EPA-452/F-03-015	Methanol and 2-Butanone are highly soluble in water and will be significantly removed in a caustic fed packed tower quencher. Naphthalene is a solid at the temperatures of the packed tower quencher and will also be significantly removed. The DBVS packed tower quencher has a state of the art INTALOX™ packing and distribution

Title: Estimate of Organic Destruction DRE for DBVS Rev. 2
Originator: T.H. May THM **Date: 7/20/06**
Checker: M. A. Fish MAF **Date: 7/20/06**
Organizational Manager: M.J. Sutey **Date: 7/20/06**

Table 4-4 Organic Removal Efficiencies

Unit Operation	Allyl Alcohol		Naphthalene		Reference	Comment
	Maximum Efficiency (%)	Minimum Expected Efficiency (%)	Maximum Efficiency (%)	Minimum Expected Efficiency (%)		
						system and a high scrubbing liquid flow rate (170 gpm or 10 moles liquid per mole of air) to improve the contact between the vapor phase and the scrubbing solution in order to strip out VOC and particulate. EPA fact sheets indicate an operating efficiency range of 70 to 99%. The chemical species anticipated at DBVS will scrub well and should result in operation in the upper range of removal efficiency and consequently a minimum removal efficiency of 80 was selected.
Venturi Scrubber and Demister	91	71	99	70	NREL/TP-570-25357, EPA-452/F-03-017, Croll-Reynolds Bulletin FS-71	Venturi scrubbers provide excellent contacting between the scrubbing liquid and the air stream and are very good at removing particulate. Venturi scrubbers are not highly efficient for VOC removal except for highly soluble compounds. Because Allyl Alcohol, Methanol and 2-Butanone are all highly soluble in water, these compounds will be removed. Highly soluble compounds such as ammonia and alcohols are absorbed in the

Title: Estimate of Organic Destruction DRE for DBVS Rev. 2
Originator: T.H. May THM **Date: 7/20/06**
Checker: M. A. Fish MAF **Date: 7/20/06**
Organizational Manager: M.J. Sutey **Date: 7/20/06**

Table 4-4 Organic Removal Efficiencies

Unit Operation	Allyl Alcohol		Naphthalene		Reference	Comment
	Maximum Efficiency (%)	Minimum Expected Efficiency (%)	Maximum Efficiency (%)	Minimum Expected Efficiency (%)		
						range of 60-97%. The minimum expected efficiency for Allyl Alcohol was set at 71 because of the high solubility. Because S-109 will be retrieved by dissolving saltcake, only soluble organic compounds will be received by DBVS. Naphthalene is a solid at the temperatures of the venturi scrubber and will also be significantly removed because venturi scrubbers are very good at removing particulate (70-99%). The venturi is provided with a high scrubbing liquid flow rate (35 gpm or 2 moles of liquid per mole of air) to improve contacting and thereby improve removal efficiency. The minimum expected efficiency for Naphthalene was set at 70.
Scrubber Condenser	90	70	90	70	EPA/452/B-02-001 EPA 456/R-01-004	See condenser info above
Demister	0	0	0	0		
HEPA	0	0	0	0		
HEGA	100	95	100	99	Pechan Report 05.0600X/9446.00	Removal efficiency of HEGA filters is related to the loading of organics on the

Title: Estimate of Organic Destruction DRE for DBVS Rev. 2
Originator: T.H. May THM Date: 7/20/06
Checker: M. A. Fish MAF Date: 7/20/06
Organizational Manager: M.J. Sutey Date: 7/20/06

Table 4-4 Organic Removal Efficiencies

Unit Operation	Allyl Alcohol		Naphthalene		Reference	Comment
	Maximum Efficiency (%)	Minimum Expected Efficiency (%)	Maximum Efficiency (%)	Minimum Expected Efficiency (%)		
					0 24590-WTP-RPT-ENV-03-005	HEGA. For new HEGA filters, the vendor expects a 99-100% removal of organics. The loading capacity for Allyl Alcohol is 20 to 30 grams per 100 grams of carbon and for napthalene is 40 to 50 grams per 100 grams of carbon. DBVS plans upon changing out the HEGA upon detection of organic breakthrough with the down steam online analyzer which will occur at roughly 20% capacity. Calculations indicate that as many as 20 ICVs may be processed before organic breakthrough is detected. This will ensure high removal efficiencies. Load capacity for 2-butanone and Naphthalene are excellent and for methanol the load capacity is good. The load capacity for Allyl Alcohol is rated as OK. Aromatics are easily removed by activated carbon. The higher the molecular weight, the easier to absorb. The higher the boiling point, the easier to absorb.

Title: Estimate of Organic Destruction DRE for DBVS Rev. 2
Originator: T.H. May THM **Date: 7/20/06**
Checker: M. A. Fish MAF **Date: 7/20/06**
Organizational Manager: M.J. Sutey **Date: 7/20/06**

Table 4-4 Organic Removal Efficiencies

Unit Operation	Allyl Alcohol		Naphthalene		Reference	Comment
	Maximum Efficiency (%)	Minimum Expected Efficiency (%)	Maximum Efficiency (%)	Minimum Expected Efficiency (%)		
SCR	95	50	95	50	EPA-452/F-03-018, 24590-WTP-RPT-ENV-03-005, EPA-456/R-95-003	The DBVS SCR will function as a Thermal Catalytic Oxidizer (TCO). The basis of this assumption is that TCO's typically operate between 600 and 900 °F and use catalyst beds to speed up the oxidation reaction. The DBVS SCR operates at 600 °F and uses a platinum/vanadium catalyst bed. The typical control efficiency range for TCOs is 90-99%. EPA data from operating facilities for compounds with high thermal stability such as aromatic compounds (methanol and 2-butanone are not as thermally stable) indicates that efficiencies drop from 95% to 72% with a 300 °F temperature drop. To be conservative, it was assumed that DBVS would drop to 50% with a 300 °F decrease. Naphthalene has an autoignition temperature less than 600 °F. Methanol and 2-butanone have autoignition temperatures of 800-850 °F but the platinum/vanadium catalysts of the SCR will enhance oxidation of these compounds.

5.0 Assumptions

The following assumptions were made during this calculation

- The VOCs contained in S-109 feed may be represented by methanol and 2-Butanone. These compounds have removal efficiencies comparable to Allyl Alcohol.
- The SVOCs contained in S-109 may be represented by Chlorobenzene and Nitrobenzene. These compounds have removal efficiencies comparable to Naphthalene. The basis of this assumption is that these are all aromatic compounds with high molecular weights and high boiling points.
- An SCR operating at 600 °F will still function as a Thermal Catalytic Oxidizer (TCO), but with lower efficiencies. The basis of this assumption is that TCO's typically operate between 600 and 900 °F. WTP test data indicates that lower temperatures reduce efficiencies. EPA data from operating facilities for compounds with high thermal stability indicates that efficiencies drop from 95% to 72% with a 300 °F temperature drop. To be conservative, it was assumed that DBVS would drop to 50% with a 300 °F decrease.
- Current vendor information for the SCR indicates an operating temperature of 600 °F.
- The lowest anticipated removal efficiency for the unit operations in DBVS was used.
- DRE calculations are done based on 1 pound of organic entering DBVS. Actual inlet quantities of organic will be much less than this on a per ICV basis.
- The dryer condenser outlet is rerouted to the inlet of the wet scrubber skid packed tower.

Title: Estimate of Organic Destruction DRE for DBVS Rev. 2
Originator: T.H. May THM Date: 7/20/06
Checker: M. A. Fish MAF Date: 7/20/06
Organizational Manager: M.J. Sutey Date: 7/20/06

6.0 Method of Analysis

The method of analysis used is described below.

The mass of organics inlet to DBVS was multiplied by the removal efficiencies from the various process units. The removal efficiencies are the lowest expected operational efficiencies as listed in Table 4-4. DRE was the calculated from the following equation:

$$DRE = (M_{inlet} - M_{residual}) / M_{inlet} * 100$$

Where M_{inlet} = mass of organics inlet to DBVS
$M_{residual}$ = mass of organics out to DBVS stack

1. VOC (methanol and 2-Butanone represented as Allyl Alcohol) DRE with lowest anticipated removal efficiency and the dryer condenser vent is rerouted to the inlet of the wet scrubber skid

   {1 - 1 * (dryer condenser %)(quencher %)(venturi scrubber %)(scrubber condenser %)(HEGA %)(SCR %)}/1*100

   $\{1 - 1 * (1-0.7)(1 - 0.8)(1 - 0.71)(1 - 0.7)(1 - 0.95)(1 - 0.5\}/1 * 100 = 99.9_{87}\ \% = 99.99\%$

2. SVOC (Chlorobenzene and Nitrobenzene represented by Naphthalene) DRE with lowest anticipated removal efficiency assuming that 50% of SVOC volatilizes in the dryer and that the dryer condenser vent is rerouted to the inlet of the wet scrubber skid

   {1 – 1*[(Dryer% to ICV) (ICV %) + (Dryer% to OGTS) (dryer condenser %)]* (quencher %)(venturi scrubber %)(scrubber condenser %)(HEGA %)(SCR %)}/1*100

   $\{1 - 1*[(1-0.5)*(1 - 0.45) + (1-0.5)*(1-0.70)](1 - 0.8)(1 - 0.70)(1 - 0.7)(1 - 0.99)(1 - 0.5)\}/1 * 100 = 99.99_6\%$

Title: Estimate of Organic Destruction DRE for DBVS Rev. 2
Originator: T.H. May THM — Date: 7/20/06
Checker: M. A. Fish MAF — Date: 7/20/06
Organizational Manager: M.J. Sutey — Date: 7/20/06

7.0 Results

Calculations indicate that DBVS will meet the Resource Conservation and Recovery Act (RCRA) Research Design and Development (RD&D) Permit requirement of 99.99% DRE for organic compounds when processing waste from tank 241-S-109 feed.

8.0 Conclusions

Calculations indicate that DBVS can meet DRE for tank 241-S-109 if all process equipment operates at lowest anticipated removal efficiency and the dryer condenser vent is rerouted to the inlet of the wet scrubber skid.

9.0 Recommendations

An additional study should be done to investigate DRE for other tanks besides tank 241-S-109 to determine if the DBVS off-gas design is suitable for a production facility.

10.0 References

Ecology, 2004, *Final Dangerous and/or Mixed Waste Research Development and Demonstration (RD&D) Permit for the Demonstration Bulk Vitrification Facility* (DBVS), State of Washington Department of Ecology, Olympia, Washington.

Tank Waste Information Network System (TWINS), Queried June 2006, [S-109 Tank reported values for vapor and headspace sample analysis analysis results http://twinsweb.pnl.gov/twins.htm.]

EPA/452/B-02-001, 2003, *EPA Air Pollution Control Cost Manual Chapters & Information*, U.S. Environmental Protection Agency Clean Air Technology Center Technical Bulletin, http://www.epa.gov/ttnecatc1/products.html#aptecfacts, Washington, D.C.

Title: Estimate of Organic Destruction DRE for DBVS Rev. 2
Originator: T.H. May THM — Date: 7/20/06
Checker: M. A. Fish MAF — Date: 7/20/06
Organizational Manager: M.J. Sutey — Date: 7/20/06

EPA 456/R-01-004, 2002, *Refrigerated Condensers for Control of Organic Air Emissions*, U.S. Environmental Protection Agency Clean Air Technology Center Technical Bulletin, http://www.epa.gov/ttncatc1/products.html#aptecfacts, Washington, D.C.

Pechan Report 05.0600X/9446.000, 2005, *UPDATE OF CONTROL EQUIPMENT DATA TO SUPPORT MPCA'S CONTROL EQUIPMENT RULE: FINAL REPORT*, Minnesota Pollution Control Agency, http://www.pca.state.mn.us/publications/aqrule-controlequipment.pdf, Minneapolis, Minnesota

24590-WTP-RPT-ENV-03-005, 2003, *4-9s Destruction and Removal Efficiency Assessment*, Rev. 0, Bechtel National, Inc., Richland, Washington.

NREL/TP-570-25357, 1998, *Biomass Gasifier :Tars": Their Nature, Formation, and Conversion*, National Renewable Energy Laboratory, Golden, Colorado.

EPA-452/F-03-015, 2006, *Packed-Bed/ Packed-Tower Wet Scrubber*, U.S. Environmental Protection Agency Clean Air Technology Center Fact Sheet, http://www.epa.gov/ttncatc1/products.html#aptecfacts, Washington, D.C.

EPA-452/F-03-018, 2003, *Air Pollution Control Technology Fact Sheet*, Environmental Protection Agency Clean Air Technology Center Fact Sheet, http://www.epa.gov/ttncatc1/products.html#aptecfacts, Washington, D.C.

EPA-454/R-95-003, 1995, *Survey of Control Technologies for Low Concentration Organic Vapor Gas Streams*, Environmental Protection Agency Clean Air Technology Center Fact Sheet, http://www.epa.gov/ttncatc1/products.html#aptecfacts, Washington, D.C.

Air Clean Systems, 2006, *Advanced Technology*, http://www.aircleansystems.com/tech_filtration.htm

EPA-452/F-03-017, 2003, *Air Pollution Control Technology Fact Sheet*, Environmental Protection Agency Clean Air Technology Center Fact Sheet, http://www.epa.gov/ttncatc1/products.html#aptecfacts, Washington, D.C.

Title: Estimate of Organic Destruction DRE for DBVS Rev. 2

Originator: T.H. May THM **Date: 7/20/06**

Checker: M. A. Fish MAF **Date: 7/20/06**

Organizational Manager: M.J. Sutey **Date: 7/20/06**

GeoMelt, 2006, Pesticides Treatment Technology Fact Sheet, http://www.ihpa.info/docs/nato/NATO_GeomeltFactSh_4.pdf

Croll-Reynolds Bulletin FS-71, 2006, Jet Venturi Fume Scrubber, http://www.croll.com/_website/ca/pdf/jet_venturi_brochure.pdf

Attachment 4
06-ESQ-099

Figures F-145579-36-A-0100, -0102, and -0105 of RPP-24544, "Demonstration Bulk Vitrification System IQRPE/RCRA Design Review Package for the Main Off-Gas Treatment System" Volumes 1 – 5 (RPP-24544, Revision 1D, dated April 26, 2006)

CH2M-

Enclosure 4

REVISED FIGURES F-145579-36-A-0100, -0102, AND -0105 OF RPP-24544, "DEMONSTRATION BULK VITRIFICATION SYSTEM IQRPE/RCRA DESIGN REVIEW PACKAGE FOR THE MAIN OFF-GAS TREATMENT SYSTEM" VOLUMES 1 - 5 (RPP-24544, REV. 1D, DATED APRIL 26, 2006)

Consisting of 3 pages, including coversheet

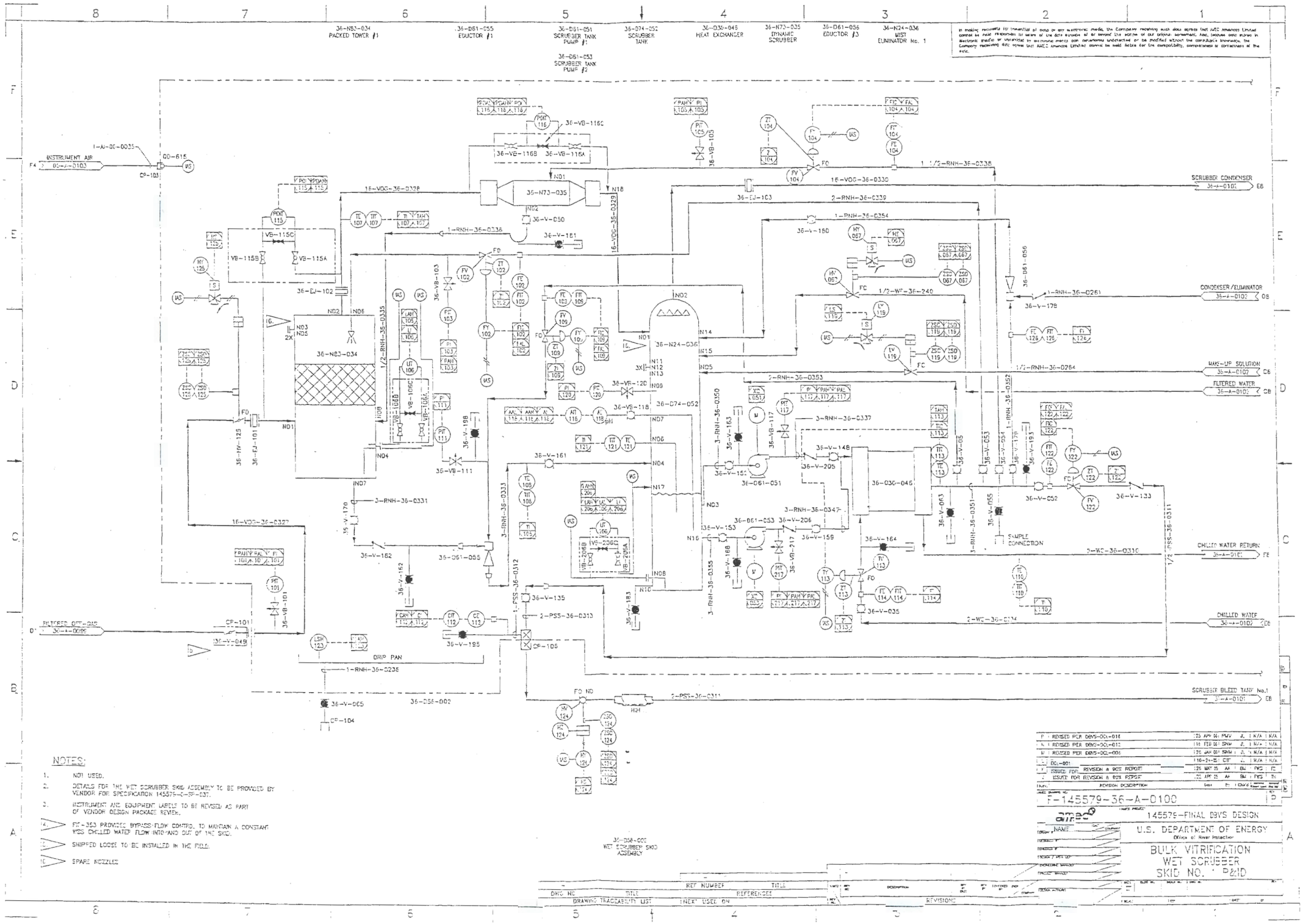
36-N83-034 PACKED TOWER #1
36-D61-055 EDUCTOR #1
36-D61-051 SCRUBBER TANK PUMP #1
36-D61-053 SCRUBBER TANK PUMP #2
36-D74-052 SCRUBBER TANK
36-D30-045 HEAT EXCHANGER
36-N73-035 DYNAMIC SCRUBBER
36-D61-056 EDUCTOR #3
36-N24-036 MIST ELIMINATOR No. 1
INSTRUMENT AIR
SCRUBBER CONDENSER
CONDENSER/ELIMINATOR
MAKE-UP SOLUTION
FILTERED WATER
CHILLED WATER RETURN
CHILLED WATER
SCRUBBER BLEED TANK No.1
SAMPLE CONNECTION
DRIP PAN
NOTES:
1. NOT USED.
2. DETAILS FOR THE WET SCRUBBER SKID ASSEMBLY TO BE PROVIDED BY VENDOR FOR SPECIFICATION 145579-C-SP-037.
3. INSTRUMENT AND EQUIPMENT LABELS TO BE REVISED AS PART OF VENDOR DESIGN PACKAGE REVIEW.
FC-353 PROVIDES BYPASS FLOW CONTROL TO MAINTAIN A CONSTANT VGS CHILLED WATER FLOW INTO AND OUT OF THE SKID.
SHIPPED LOOSE TO BE INSTALLED IN THE FIELD.
SPARE NOZZLES
F-145579-36-A-0100
145579-FINAL DBVS DESIGN
U.S. DEPARTMENT OF ENERGY
Office of River Protection
BULK VITRIFICATION
WET SCRUBBER
SKID NO. 1 P&ID

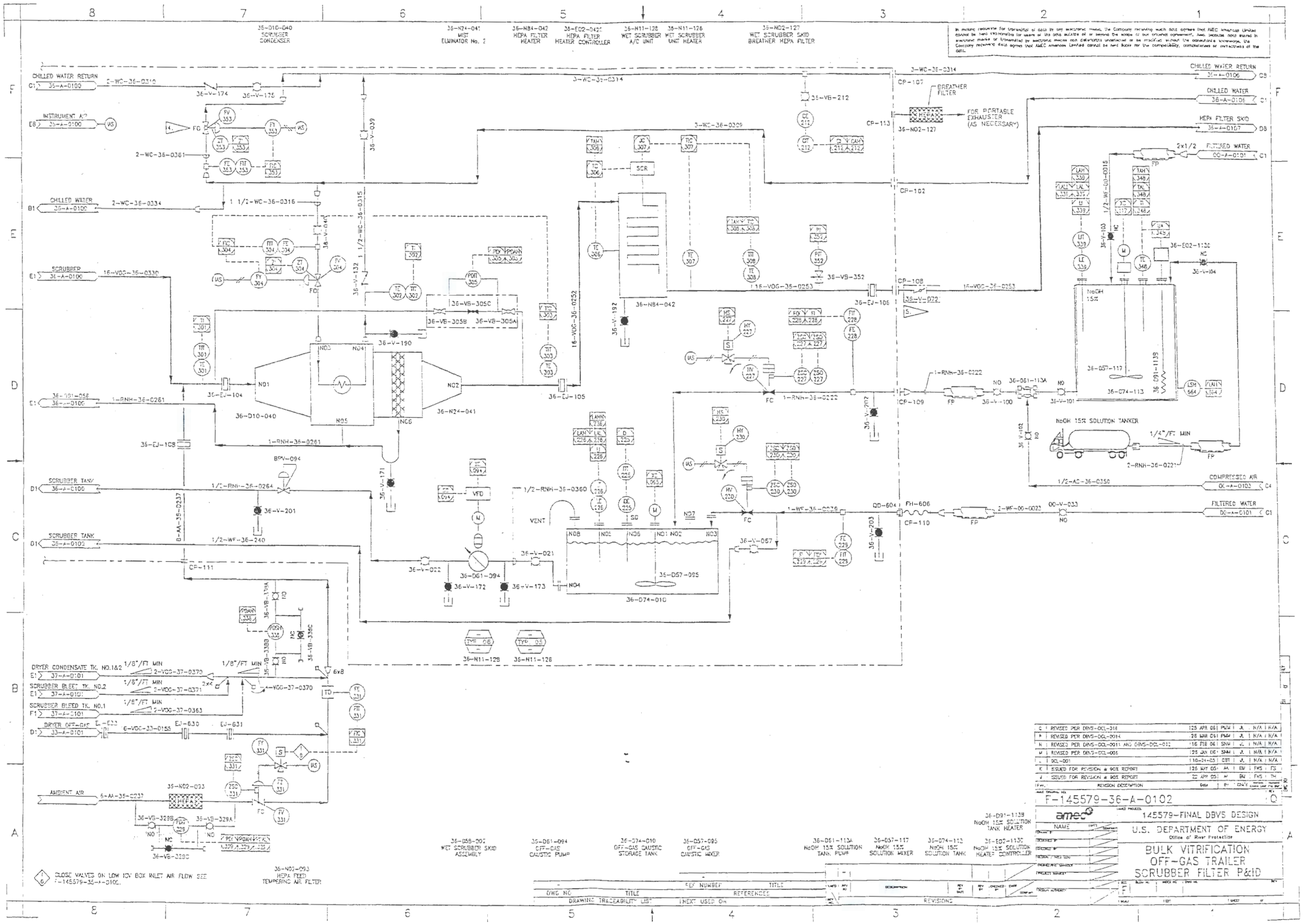

M:\Demonstration Bulk Vit\Fiscal Year 2006 Work\CAD\P&IDs\F-145579-36-A-0102_Q.dwg, 4/26/2006 11:43:44 AM, FGR

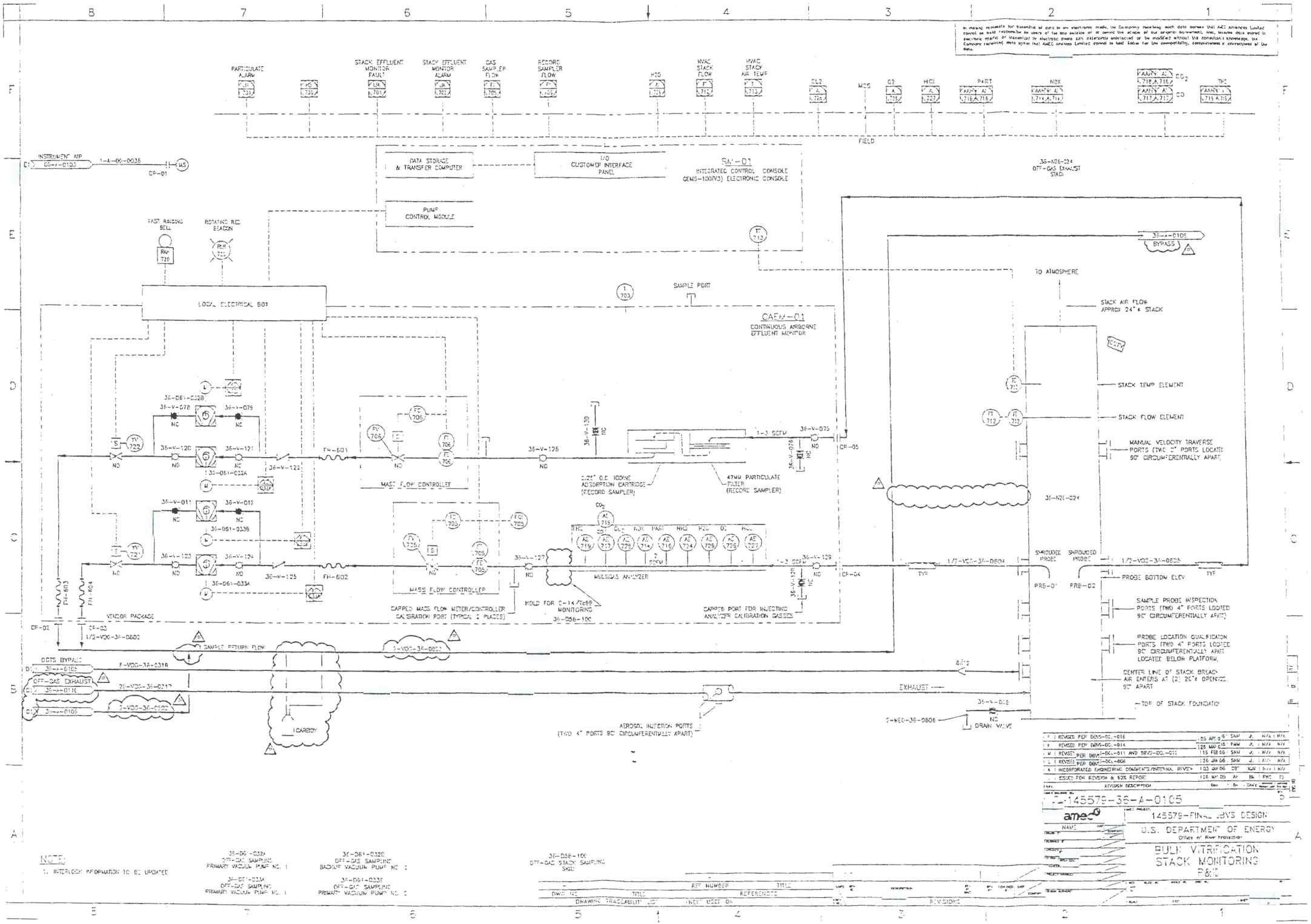
PARTICULATE ALARM
STACK EFFLUENT MONITOR FAULT
STACK EFFLUENT MONITOR ALARM
GAS SAMPLER FLOW
RECORD SAMPLER FLOW
H2O
HVAC STACK FLOW
HVAC STACK AIR TEMP
CL2
MCS
O2
HCl
PART
NOX
CO2
CO
THC
FIELD
INSTRUMENT AIR
DATA STORAGE & TRANSFER COMPUTER
I/O CUSTOMER INTERFACE PANEL
SM-01
INTEGRATED CONTROL CONSOLE
GEMS-1000(V3) ELECTRONIC CONSOLE
PUMP CONTROL MODULE
36-N26-024
OFF-GAS EXHAUST STACK
FAST RINGING BELL
ROTATING RED BEACON
LOCAL ELECTRICAL BOX
SAMPLE PORT
CAEM-01
CONTINUOUS AIRBORNE EFFLUENT MONITOR
TO ATMOSPHERE
STACK AIR FLOW APPROX 24" ø STACK
STACK TEMP ELEMENT
STACK FLOW ELEMENT
MANUAL VELOCITY TRAVERSE PORTS (TWO 2" PORTS LOCATED 90° CIRCUMFERENTIALLY APART)
MASS FLOW CONTROLLER
0.25" O.D. IODINE ADSORPTION CARTRIDGE (RECORD SAMPLER)
47MM PARTICULATE FILTER (RECORD SAMPLER)
MULTIGAS ANALYZER
CAPPED MASS FLOW METER/CONTROLLER CALIBRATION PORT (TYPICAL 2 PLACES)
HOLD FOR C-14/TESS MONITORING
CAPPED PORT FOR INJECTING ANALYZER CALIBRATION GASSES
VENDOR PACKAGE
SAMPLE RETURN FLOW
OGTS BYPASS
OFF-GAS EXHAUST
CARBOY
AEROSOL INJECTION PORTS (TWO 4" PORTS 90° CIRCUMFERENTIALLY APART)
EXHAUST
DRAIN VALVE
SHROUDED PROBE
PROBE BOTTOM ELEV
SAMPLE PROBE INSPECTION PORTS (TWO 4" PORTS LOCATED 90° CIRCUMFERENTIALLY APART)
PROBE LOCATION QUALIFICATION PORTS (TWO 4" PORTS LOCATED 90° CIRCUMFERENTIALLY APART LOCATED BELOW PLATFORM)
CENTER LINE OF STACK BREACH AIR ENTERS AT (2) 20"ø OPENINGS, 90° APART
TOP OF STACK FOUNDATION
NOTES:
1. INTERLOCK INFORMATION TO BE UPDATED
36-061-032A OFF-GAS SAMPLING PRIMARY VACUUM PUMP NO. 1
36-061-033A OFF-GAS SAMPLING PRIMARY VACUUM PUMP NO. 1
36-061-032B OFF-GAS SAMPLING BACKUP VACUUM PUMP NO. 2
36-061-033B OFF-GAS SAMPLING PRIMARY VACUUM PUMP NO. 2
36-056-100 OFF-GAS STACK SAMPLING SKID
REVISED PER DDVS-DCL-016
REVISED PER DDVS-DCL-014
REVISED PER DDVS-DCL-011 AND DDVS-DCL-012
REVISED PER DDVS-DCL-006
INCORPORATED ENGINEERING COMMENTS/INTERNAL REVIEW
ISSUED FOR REVISION & 90% REPORT
REVISION DESCRIPTION
145579-36-A-0105
145579-FINAL DDVS DESIGN
U.S. DEPARTMENT OF ENERGY
Office of River Protection
BULK VITRIFICATION
STACK MONITORING
P&ID