U.S. Department of Energy
Hanford Site

June 22, 2020

20-ESQ-0069

Ms. Alexandra K. Smith, Program Manager
Nuclear Waste Program
Washington State Department of Ecology
3100 Port of Benton Boulevard
Richland, Washington 99354

Dear Ms. Smith:

SUPPLEMENTAL INFORMATION FOR THE INTEGRATED DISPOSAL FACILITY OPERATING UNIT GROUP 11 CLASS 3 PERMIT MODIFICATION REQUEST

This is responding to your March 6, 2020, 20-NWP-047 letter on the Completeness Determination for the Operations Class 3 Permit Modification for the Hanford Facility Resource Conservation and Recovery Act Permit, Dangerous Waste Portion, Revision 8C for the Treatment, Storage and Disposal of Dangerous Waste, Operating Unit Group 11 (OUG-11), Integrated Disposal Facility (IDF) Permit, WA7890008967, and transmits additional information for the completeness determination for the IDF, OUG-11, Modification Request in accordance with Washington Administrative Code 173-303-840(1)(b).

This transmittal includes the following Attachments:

- Attachment 1: Certification(s) for Supporting Permit Application Material for IDF:
  - 1A: CH2M HILL Plateau Remediation Company Certification
  - 1B: Department of Energy Certification
- Attachment 2: "Waste Acceptance Criteria for the Integrated Disposal Facility"
- Attachment 3: Supplemental Information for IDF Dangerous Waste Permit Application:
  - 3A: IDF Leachate Collection Piping Plan
  - 3B: IDF Leachate Transfer Piping Plan
  - 3C: IDF LCRS/LDS Sections and Details
  - 3D: IDF Cell #1 P&ID
  - 3E: IDF Cell #2 P&ID
  - 3F: IDF Leachate Tank Foundation Plan, Section & Detail
  - 3G: IDF Infrastructure Tank Cover Foundation Plan
  - 3H: CHPRC Engineering Change Request/Facility Modification Package
  - 3I: IQPRE Design Assessment Report, Cell 2
  - 3J: IQPRE Installation Assessment Report, Cell 2
  - 3K: Contractor Quality Assessment Certification for IDF Cell 1 and 2
- Attachment 4: "Facility Response Plan for Integrated Disposal Facility," HNF-IP-0603-IDF, Revision 0

Attachment 2 is provided as supplemental information only, and is not part of the Permit Modification Request. Attachment 4 is to be incorporated into the Permit Modification Request as Addendum J, to replace the current Addendum J, IDF Contingency Plan.

If you have any questions, please contact me, or your staff may contact Brian J. Stickney, Assistant Manager for Safety and Environment, Richland Operations Office, on (509) 376-9079.

Sincerely,

Digitally signed by Brian T. Vance
DN: cn=Brian T. Vance, o=Office of River Protection, ou=Department of Energy, email=brian.t.vance@orp.doe.gov, c=US
Date: 2020.06.22 11:30:18 -07'00'

Brian T. Vance
Manager

ESQ:DBC

Attachments:
1. CHPRC/DOE Certifications
2. Waste Acceptance Criteria for IDF
3. Supplemental Information for IDF Dangerous Waste Permit Application
4. Facility Response Plan for IDF

cc w/attachs:
M. Baker, Ecology
D. B. Bartus, EPA
J. Bell, NPT
R. Buck, Wanapum
C. E. Cameron, EPA
L. Contreras, YN
S. L. Dahl-Crumpler, Ecology
D. R. Einan, EPA
M. Johnson, CTUIR
M. E. Jones, Ecology
K. Niles, ODOE
S. N. Schleif, Ecology
N. W. Ware, Ecology
Administrative Record (TSD: D-2-11)
Ecology NWP Library
Environmental Portal, G3-35
HF Operating Record (J. K. Perry, MSA)

CH2M HILL Plateau Remediation Company Certification

The following certification statement is provided in accordance with WAC 173-303-810 for the submittal of supporting permit application material for the *Integrated Disposal Facility, Operating Unit Group 11, Class 3 Permit Modification Request.* The reference submittal provides additional information required by the State of Washington Department of Ecology.

I certify under penalty of law that this document and all attachments were prepared under my direction or supervision in accordance with a system designed to assure that qualified personnel properly gather the evaluate the information submitted. Based on my inquiry of the person or persons who manage the system, or those persons directly responsible for gathering the information, the information submitted is, to the best of my knowledge and belief, true, accurate, and complete. I am aware that there are significant penalties for submitting false information, including the possibility of fine and imprisonment for knowing violations.

L. Ty Blackford
President
CH2M HILL Plateau Remediation Company

6/4/2020
Date

Department of Energy Certification

The following certification statement is provided in accordance with WAC 173-303-810 for the submittal of supporting permit application material for the *Integrated Disposal Facility, Operating Unit Group 11, Class 3 Permit Modification Request.* The reference submittal provides additional information required by the State of Washington Department of Ecology.

I certify under penalty of law that this document and all attachments were prepared under my direction or supervision in accordance with a system designed to assure that qualified personnel properly gather the evaluate the information submitted. Based on my inquiry of the person or persons who manage the system, or those persons directly responsible for gathering the information, the information submitted is, to the best of my knowledge and belief, true, accurate, and complete. I am aware that there are significant penalties for submitting false information, including the possibility of fine and imprisonment for knowing violations.

Digitally signed by Brian T. Vance
DN: cn=Brian T. Vance, o=Office of River Protection, ou=Department of Energy, email=brian.t.vance@orp.doe.gov, c=US
Date: 2020.06.22 11:31:35 -07'00'

Brian T. Vance, Manager
Owner/Operator
U.S. Department of Energy

Date

IDF-00002
Revision 0

Waste Acceptance Criteria for the Integrated Disposal Facility

Prepared for the U.S. Department of Energy
Assistant Secretary for Environmental Management

Contractor for the U.S. Department of Energy
under Contract DE-AC06-08RL14788

CH2MHILL
Plateau Remediation Company

P.O. Box 1600
Richland, Washington 99352

Approved for Public Release;
Further Dissemination Unlimited

IDF-00002
Revision 0

Waste Acceptance Criteria for the Integrated Disposal Facility

Document Type: WAC Program/Project: Integrated Disposal Facility (IDF)

W. A. Borlaug
CH2M HILL Plateau Remediation Company

Date Published
December 2019

Prepared for the U.S. Department of Energy
Assistant Secretary for Environmental Management

Contractor for the U.S. Department of Energy
under Contract DE-AC06-08RL14788

CH2MHILL
Plateau Remediation Company
P.O. Box 1600
Richland, Washington 99352

APPROVED
By Lynn M. Ayers at 8:43 am, Dec 16, 2019

Release Approval Date

Approved for Public Release;
Further Dissemination Unlimited

TRADEMARK DISCLAIMER

Reference herein to any specific commercial product, process, or service by tradename, trademark, manufacturer, or otherwise, does not necessarily constitute or imply its endorsement, recommendation, or favoring by the United States Government or any agency thereof or its contractors or subcontractors.

This report has been reproduced from the best available copy.

Printed in the United States of America

CONTENTS

1.0 INTRODUCTION 1
1.1 PURPOSE AND SCOPE 1
1.1.1 Policy Statement 1
1.1.2 Scope of Waste Acceptance Criteria Document 2
1.2 INTEGRATED DISPOSAL FACILITY DESCRIPTION 2
1.3 WASTE TYPES ACCEPTED FOR DISPOSAL 2
1.3.1 Low-Level Waste (LLW) 2
1.3.2 Mixed Low-Level Waste (MLLW) 2
1.4 DEVIATIONS TO THE WASTE ACCEPTANCE CRITERIA 2

2.0 WASTE ACCEPTANCE PROCESS 3
2.1 WASTE GENERATOR RESPONSIBILITIES 3
2.1.1 Waste Certification Program 3
2.1.2 Quality Assurance Requirements 3
2.1.3 Waste Forecast 4
2.1.4 Records 4
2.1.5 Physical and Chemical Characterization 4
2.1.6 Waste Profiles 5
2.2 WASTE CERTIFICATION 7
2.3 WASTE VERIFICATION 7
2.4 EVALUATION OF GENERATOR WASTE CERTIFICATION PROGRAM 7
2.5 AUTHORIZATION TO SHIP WASTE 7
2.6 NONCONFORMING WASTE 8

3.0 WASTE ACCEPTANCE CRITERIA 8
3.1 GENERAL CRITERIA 8
3.1.1 Physical and Chemical Criteria 8
3.1.2 Prohibited Waste 10
3.2 LOW-LEVEL WASTE 12
3.2.1 Radiological Characterization 12
3.2.2 Identification of Major Radionuclides 12
3.2.3 Methods for Establishing Radionuclide Inventory 12
3.2.4 Radiological Acceptance Limits 13
3.3 MIXED LOW-LEVEL WASTE 15
3.3.1 LDR Waste Treatment Requirements 15
3.3.2 LDR Treatment Performed at IDF 15
3.4 CONFLICTING REQUIREMENTS 15

4.0 PACKAGING CRITERIA 16
4.1 PACKAGING CONSTRUCTION 16
4.2 CONDITION OF CONTAINERS 16
4.3 HANDLING OF PACKAGES 16
4.4 LABELING 17
4.5 NONCONTAINERIZED WASTE 17
4.6 MINIMIZATION OF SUBSIDENCE 17
4.7 PACKAGE CONTAMINATION LIMITS 17
4.8 PACKAGE DOSE RATE LIMITS 18
4.9 CLASSIFIED AND ACCOUNTABLE NUCLEAR MATERIAL 18
4.10 SECURING WASTE AND SHIELDING 18
4.11 WASTE SHIPMENT RECORDS 18

5.0 DEFINITIONS 18

6.0 REFERENCES 23

APPENDICES

A DOE-STD-5002-2017, CHAPTER 6 – WASTE ACCEPTANCE CRITERIA CROSSWALK ..... A-i

B GUIDANCE FOR MASS BALANCE OF HAZARDOUS/MIXED WASTE ..... B-i

C APPROVED VENTS FOR WASTE CONTAINERS ..... C-i

D CHEMICAL CONSTITUENTS/LINER SYSTEM COMPATIBILITY ..... D-i

E VOID FILLERS, SORBENTS, AND STABILIZING MATERIALS ..... E-i

F RADIOLOGICAL CALCULATION METHODS ..... F-i

G RADIOLOGICAL ACCEPTANCE LIMITS ..... G-i

H CONTAINERS, COATINGS, AND LINERS ..... H-i

I LABELING OF WASTE CONTAINERS ..... I-i

LIST OF TERMS

ALARA	as low as reasonably achievable
CH-TRAMPAC	contact-handled transuranic waste authorized method for payload control
DAS	Disposal Authorization Statement
DOE	U.S. Department of Energy
DOT	U.S. Department of Transportation
Ecology	Washington State Department of Ecology
EPA	U.S. Environmental Protection Agency
HC	hazard category
IDF	Integrated Disposal Facility
LDR	land disposal restriction
LLW	low-level waste
LTHC-3	less than hazard category 3
MLLW	mixed low-level waste
OWTF	Onsite Waste Tracking Form
PA	performance assessment
QAP	quality assurance plan
RCRA	*Resource Conservation and Recovery Act of 1976*
RCW	*Revised Code of Washington*
SOR	sum of ratios
TRU	transuranic
TSD	treatment, storage, and/or disposal
WAC	*Washington Administrative Code*

This page intentionally left blank.

1.0 INTRODUCTION

DOE O 435.1, *Radioactive Waste Management*, requires that each treatment, storage, and/or disposal (TSD) facility that manages low-level waste (LLW) and mixed low-level waste (MLLW) maintain waste acceptance criteria. These criteria must address the various requirements to operate the TSD facility in compliance with applicable requirements (e.g., safety, environmental).

As described in DOE O 435.1, the Radioactive Waste Management Basis for a disposal facility consists of the performance assessment, composite analysis, disposal authorization statement, closure plan, waste acceptance criteria, and monitoring plan. In particular, this document provides criteria for complying with the conditions described in the *Operating Disposal Authorization Statement for the Integrated Disposal Facility, Hanford Site* (DOE, 2018; hereinafter called the DAS). The DAS is the license for disposal of radioactive materials granted by the U.S. Department of Energy (DOE). Appendix A, "DOE-STD-5002-2017, Chapter 6 – Waste Acceptance Criteria Crosswalk," to this document provides a crosswalk to document compliance with the change control process guidance in Table 6-2 of DOE-STD-5002-2017, *Disposal Authorization Statement and Tank Closure Documentation*.

Additional acceptance criteria are provided for compliance with the *Washington Administrative Code* (WAC) 173-303, "Dangerous Waste Regulations," as identified in WA7890008967, *Hanford Facility Resource Conservation and Recovery Act Permit, Dangerous Waste Portion, Revision 8C, For the Treatment, Storage, and Disposal of Dangerous Waste* (Operating Unit Group 11) dangerous waste (specifically the subset of MLLW) authorized by the Washington State Department of Ecology (Ecology).

1.1 PURPOSE AND SCOPE

This document provides criteria for acceptance of LLW and MLLW waste at the Integrated Disposal Facility (IDF). The DAS stipulates that the waste acceptance requirements include specific radionuclide disposal limits, waste form restrictions, and descriptions of acceptable waste packages. Additionally, waste acceptance procedures are maintained to describe requirements for waste characterization, waste certification, and record keeping, as well as the process for authorizing deviations from the requirements. The acceptance criteria include the waste designation and management requirements of WAC 173-303-140, "Dangerous Waste Regulations," "Land Disposal Restrictions," requirements.

1.1.1 Policy Statement

This document provides criteria for complying with requirements governing waste disposal at the IDF to:

- Ensure safe and compliant disposal of LLW and MLLW.
- Protect human health and the environment in accordance with the requirements of the WAC 173-303 and the *Revised Code of Washington* (RCW) 70.105, "Hazardous Waste Management."
- Protect the workers, members of the public, and the environment in accordance with DOE O 435.1, and applicable U.S. Department of Transportation (DOT) regulations.
- Ensure that present and future radiation exposures are kept as low as reasonably achievable (ALARA) and do not exceed the radiation protection standards established in 10 CFR 835, "Occupational Radiation Protection."
- Ensure that quality assurance programs are established and implemented to fulfill the requirements of DOE O 435.1; 10 CFR 830.122, "Nuclear Safety Management," "Quality Assurance Criteria"; and DOE O 414.1D, *Quality Assurance*.
- Be consistent with applicable federal, state, and local regulations.

1.1.2 Scope of Waste Acceptance Criteria Document

The IDF waste acceptance criteria are established in this document to ensure that waste accepted can be managed within the operating requirements, including environmental regulations, DOE orders, permits, technical safety requirements, waste analysis plans, and performance assessments. Acceptance criteria in this document apply to LLW and MLLW from Hanford Site waste generators.

Waste acceptance criteria will ensure the required treatment has been performed before the waste is disposed and will prohibit the disposal of ignitable and reactive wastes.

1.2 INTEGRATED DISPOSAL FACILITY DESCRIPTION

The IDF Operating Unit Group comprises the following four dangerous waste management units:

- A storage pad is used for unloading, staging, and temporarily storing incoming waste containers. This ground level concrete pad is located west of the disposal cells.
- A treatment pad is used for treating waste to meet disposal requirements. Treatment capabilities include debris immobilization technologies from 40 CFR 268.45, "Treatment Standards for Hazardous Debris" (sealing, microencapsulation, and macroencapsulation). This ground-level concrete pad is also located west of the disposal cells.
- Two disposal cells (cells 1 and 2) are two large excavations designed for the disposal of both LLW and MLLW. The IDF disposal cells are equipped with primary and secondary geomembrane liners and are constructed to RCRA Subtitle C standards.

The IDF also contains a tank system; however, the tank system is managed according to the generator requirements of WAC 173-303. Leachate from the liners is collected and managed by a leachate collection and removal system and accumulated in the tanks.

1.3 WASTE TYPES ACCEPTED FOR DISPOSAL

This section identifies the types of wastes accepted for disposal at IDF.

1.3.1 Low-Level Waste (LLW)

LLW is radioactive waste that is not high-level radioactive waste, spent nuclear fuel, transuranic (TRU) waste, byproduct material (as defined in Section 11e.(2) of the *Atomic Energy Act of 1954*), or naturally occurring radioactive material (DOE M 435.1-1, *Radioactive Waste Management Manual*).

1.3.2 Mixed Low-Level Waste (MLLW)

Hanford Tank Dangerous waste is solid waste designated in accordance with WAC 173-303-070, "Designation of Dangerous Waste," through WAC 173-303-100, "Dangerous Waste Criteria," as dangerous or extremely hazardous. A subset of dangerous waste, MLLW is defined in WAC 173-303-040, "Definitions," as:

> means a dangerous, extremely hazardous, or acutely hazardous waste that contains both a nonradioactive hazardous component and, as defined by 10 C.F.R. 20.1003, source, special nuclear, or by-product material subject to the Atomic Energy Act of 1954 (42 U.S.C. 2011 et seq.).

1.4 DEVIATIONS TO THE WASTE ACCEPTANCE CRITERIA

Deviations to the acceptance criteria will be approved by DOE, and as applicable, Ecology. Deviations to the acceptance criteria may be granted in certain cases (e.g., safety basis and performance assessment,

TSD unit container size limits, compliance with regulations, permit conditions, compliance orders, or other requirements imposed by a regulatory agency).

A generator can request a deviation from one or more of the criteria in this document. The request should be a written letter to the IDF waste acceptance team that includes the following information:

- Specific requirement(s) in this document for which a deviation is desired
- Waste type (e.g., LLW and MLLW)
- Waste characteristics (e.g., physical descriptions, dose rates, radiological constituents, and hazardous waste constituents)
- Packaging information (e.g., volume, weight, dimensions, internal configuration, and materials)
- Efforts made to comply with the requirements of this document
- How the generator complied with the waste generation/life cycle planning requirements of DOE M 435.1-1
- Alternative analyses (including life cycle estimates) showing that acceptance of waste that is not compliant with requirement(s) of this document is the most cost-effective solution for DOE

2.0 WASTE ACCEPTANCE PROCESS

Waste generators must receive approval from IDF before shipment of waste to the IDF as specified in this document. Use of the waste acceptance process is mandatory. Based on the waste certification information required under Section 2.4, waste profiles and a waste designation shall be developed and approved for each waste source (or sufficiently similar group of waste sources). The waste profile includes the waste form, characterization data, appropriate waste codes (known Dangerous Waste numbers), and state and federal land disposal restrictions (LDRs) (e.g., treatment required).

Waste profiles shall be provided to and approved by the IDF waste acceptance team prior to initiating shipments to ensure compliance with the IDF waste acceptance criteria and to facilitate planning of waste receiving and disposal actions. Waste designations shall be confirmed through the waste certification and verification programs.

2.1 WASTE GENERATOR RESPONSIBILITIES

Generators of radioactive waste have certain general responsibilities under DOE O 435.1. Acceptance of waste at the IDF is contingent on effectively fulfilling these responsibilities.

2.1.1 Waste Certification Program

Waste generators must implement and maintain a waste certification program to ensure that any waste sent to the IDF meets the requirements established in Section 3.0 in accordance with DOE M 435.1-1 and WAC 173-303. Activities that may be performed by the generators include application of process knowledge, observation, process monitoring, sample collection and analysis, or a combination thereof.

2.1.2 Quality Assurance Requirements

Each generator shall have a quality assurance plan (QAP) as part of its overall waste certification program. The QAP shall implement the requirements of 10 CFR 830, “Nuclear Safety Management,” Subpart A, “Quality Assurance Requirements,” and DOE O 414.1D (DOE M 435.1-1). The generator QAP shall be subject to evaluation according to the requirements of Section 2.4.

2.1.3 Waste Forecast

Waste generators shall provide an annual waste forecast to IDF. Annual waste forecasts shall include yearly waste shipment estimates to IDF through the next 10 years. The timing and format of the waste forecast will be provided by IDF.

2.1.4 Records

The waste generator shall retain a copy of the information and data (e.g., process knowledge, sampling information, analytical data, inventory records, and related information) used to characterize and designate the waste in each profile in accordance with federal and state requirements and DOE orders. The waste generator must provide copies of the waste characterization information and data as requested by IDF through the waste acceptance process.

2.1.5 Physical and Chemical Characterization

Waste must be characterized in a sufficient manner to ensure that the waste can be managed in accordance with the requirements set forth in this document. This includes sufficient knowledge to:

- Demonstrate that the waste is not prohibited
- Segregate waste containers for compatibility
- Ensure compatibility of waste with containers
- Ensure that the waste can be safely managed

The waste generator must determine the physical and chemical characteristics of the waste with sufficient accuracy and detail to properly designate and manage the waste in accordance with the IDF acceptance criteria and applicable regulations (i.e., acceptable knowledge) such as the following:

- WAC 173-303-300, “General Waste Analysis”
- 40 CFR 761, “Polychlorinated Biphenyls (PCBs) Manufacturing, Processing, Distribution in Commerce, and Use Prohibitions” (Note: The IDF is not a Chemical Waste Landfill as defined by 40 CFR 761.75.)

The waste generator shall perform the activities necessary to characterize, support, and designate the waste for dangerous waste sources, characteristics, and as applicable, the dangerous waste criteria pursuant to WAC 173-303-070. The sampling preparation and testing methods shall conform to requirements in WAC 173-303-110, “Sampling, Testing Methods and Analytes.”

2.1.5.1 General Waste Knowledge Requirements

General waste knowledge must be sufficient to determine the waste stream designation and to manage the waste in accordance with the IDF waste acceptance criteria necessary for proper management of the waste.

Analytical data and/or knowledge of the waste must be sufficient to determine whether the waste is regulated under WAC 173-303 to assign correct waste codes and 40 CFR 761. Knowledge of the waste-generating process alone is used to determine whether a waste stream is a listed waste identified in WAC 173-303-080, “Dangerous Waste Lists,” through WAC-173-303-082, “Dangerous Waste Sources.” Solid waste that might exhibit characteristics that would cause the waste to be dangerous waste shall be designated in accordance with WAC 173-303-090, “Dangerous Waste Characteristics.” Book designation of solid wastes for persistence and toxicity or bioassay testing for toxicity shall be in accordance with WAC-173-303-100. For characteristic waste codes and for classification under 40 CFR 761, if the

available process knowledge is not sufficient to determine whether the waste is regulated and to assign waste codes, sampling and analysis of a representative sample must be performed. The sampling and testing methods outlined in WAC 173-303-110 must be used for the toxicity characteristics, corrosivity, and free liquids. Appropriate test methods include those defined in SW-846, *Test Methods for Evaluating Solid Waste: Physical/Chemical Methods, Third Edition; Final Update V*, or other methods with proper quality assurance and quality control requirements.

2.1.5.2 Types of Acceptable Knowledge

The types of information that can be used for physical/chemical characterization include data from analysis of the waste and knowledge of the materials and/or processes that generate the waste. Acceptable knowledge can be obtained using the following types of information:

- Mass balance data from the waste generating process, to the extent that such data provides a sufficient understanding of the characteristics of and constituents in the waste stream. Guidance is provided in Appendix B, "Guidance for Mass Balance of Hazardous/Mixed Waste," to this document.
- Safety Data Sheets for commercial chemical products
- Analysis data from a representative sample of the waste or for a waste generated by a similar process
- Interview information
- Logbooks
- Procurement records
- Qualified analytical data
- Radiation work packages
- Procedures and/or methods
- Process flow charts
- Inventory sheets
- Vendor information
- Mass balance from an uncontrolled process (e.g., spill cleanup)
- Mass balance from a controlled process with variable inputs and outputs (e.g., washing/cleaning methods)

2.1.6 Waste Profiles

The waste profile provides a detailed physical, radiological, chemical, and biological analysis of low-level or mixed waste to be accepted at IDF. The waste profile must provide a detailed description of the waste stream's physical, radiological, and chemical characteristics, regulatory classification, and packaging methods. Relevant background information, documents, and analytical data must be referenced or attached. The waste profile includes the following information:

- Generator information (e.g., name, address, point-of-contact, telephone number)
- Waste-generating process description
- Waste category (e.g., LLW or MLLW)

- Estimated volume of the waste
- Estimated number of waste containers to be shipped
- Knowledge used for characterization of the waste stream
- Sampling and analysis performed to characterize the waste stream
- Regulatory requirements of the waste stream (e.g., testing for underlying hazardous constituents) including applicable state and federal LDRs
- Waste characteristics (e.g., flash point and pH), physical state (e.g., sludge and debris), liquid content information, and the waste composition
- Description of the packaging to be used, including container compatibility with the waste
- Provisions for handling (e.g., maximum container size and weight, and special handling requirements)
- Conditions of approval, when applicable (e.g., profile approval may be contingent upon additional detail and/or documentation requested of the generator)

Waste profiles shall include waste codes and applicable treatment standard, subcategory, and underlying dangerous/hazardous constituents. If the treatment standard is expressed in terms of a concentration limit, the actual concentration of the restricted constituent shall also be reported. If the waste has no listed waste codes and no longer exhibits the characteristic of a dangerous/hazardous waste because it has been treated, the waste profile shall include a certification that the waste meets LDRs in accordance with 40 CFR 268.7, "Testing, Tracking, and Recordkeeping Requirements for Generators, Treaters, and Disposal Facilities," or 40 CFR 268.9, "Special Rules Regarding Wastes that Exhibit a Characteristic," incorporated by reference at WAC 173-303-140.

Waste profiles include a certification by the waste generator that the waste sent to the IDF meets the IDF waste acceptance requirements.

2.1.6.1 New Waste Profiles

Generators shall designate the waste and submit a request for a waste profile and supporting documentation for each new waste stream intended for IDF. Each waste profile is assigned a unique number for tracking purposes. Once the waste profile request is received, the IDF waste acceptance team performs a review of the generator's data provided in the waste profile request. The IDF waste acceptance team evaluates the data for consistency between the identified information and subsequent determinations. Errors discovered during the waste profile review process must be reconciled by the generator, and the profile information must be updated accordingly. Upon successful review and approval of the waste profile, IDF sends an approval notice to the generator.

2.1.6.2 Standing Waste Profiles

A standing waste profile is used to receive multiple shipments from the same generator for the same waste stream. Standing waste profiles are subject to review and must be recertified at least annually or revised (if applicable) when notified by the generator of waste stream or generating process changes. In addition, standing waste profiles are subject to review and revision if the IDF waste acceptance team has reason to suspect a change in the waste, based on inconsistencies in packaging, labeling, or visual verification of the waste. A generator may also request that a standing waste profile be revised and

approved for additional waste generated that consists of the same types of waste. The IDF waste acceptance team will coordinate the waste profile revisions and recertification.

When waste profiles are revised, depending on the significance of the revision, authorization for continued shipping under the current approved waste profile may be suspended until the changes have been reviewed and accepted.

2.2 WASTE CERTIFICATION

Physical, radiological, and chemical characterization data for a waste stream must be recertified at least annually or whenever the waste generating process changes (Section 2.1.6.2). Waste generators shall notify the IDF waste acceptance team of any changes to the waste generator's physical, chemical, or radiological characterization of the waste stream. At a minimum, recertification shall identify changes to the generating process and any additional analytical data obtained from the waste stream. Sampling and analysis of the waste stream is not required to be performed more frequently than required by the regulations.
The radiological characterization of waste streams must be recertified with sufficient frequency to account for changes in the generating process, radiological composition, and radiological decay.

2.3 WASTE VERIFICATION

Generator waste verification may include one or more of the following:

- Site visits
- Reviewing sample data and other information
- Observation of process monitoring, sample collection, and/or container packaging activities, as allowed by the generator and ALARA concerns

The level of review will be determined by the IDF waste acceptance team. Nonconformances identified during IDF review will be transmitted to the generator for resolution. Nonconformances may result in increased IDF oversight.

2.4 EVALUATION OF GENERATOR WASTE CERTIFICATION PROGRAM

Under DOE M 435.1-1, waste received must be evaluated to ensure the waste meets the IDF acceptance criteria. This requirement is implemented through review of information submitted by the waste generator and observations of generator activities (Section 2.3). When repeated or serious nonconformances are found, additional evaluations will be performed as identified in Section 2.6.

2.5 AUTHORIZATION TO SHIP WASTE

Waste receipts at IDF shall be scheduled at least 3 weeks in advance, unless approved otherwise by the IDF waste acceptance team. Authorization to ship is provided by the IDF waste acceptance team to the waste generator through the use of an Onsite Waste Tracking Form (OWTF) (Site Form A-6007-124) with a unique waste disposal approval number that is obtained from the IDF waste acceptance team on a per-shipment basis. The waste generator is required to provide the information necessary to complete the OWTF, including the following:

- Characterization information and waste code designations
- LDR certification/notification (required for waste subject to the requirements of WAC 173-303-140, which includes by reference 40 CFR 268, "Land Disposal Restrictions").
- List of containers, each with a unique identification number

- Container inventory information:
  - Name and location of the waste-generating facility
  - Specific contents of each container
  - Approximate weight of waste in each container
- Container labeling requirements (e.g., DOT-required labels)

IDF will conduct a preshipment review of the OWTF. This review ensures that the shipment complies with the approved waste profile. If IDF discovers an error during the preshipment review, the generator must reconcile the error and provide updated information, as applicable.

Waste generators are responsible for coordinating shipment of their waste to IDF and shall ensure that packaging, labeling, and handling of each shipment complies with this document and appropriate state and federal waste and transportation regulations, and applicable DOE orders pertaining to waste transport requirements.

2.6 NONCONFORMING WASTE

Nonconforming waste or waste received with shipping document discrepancies may be temporarily stored at IDF pending generator resolution of discrepancies or returned to the waste generator. IDF reviews the nature, frequency, and severity of the waste acceptance nonconformance issues. Based on the results of the review, IDF may request that the generator act to correct nonconformance issues. In addition, IDF may take the following actions:

- Increase the level of oversight for the waste streams that have incurred verification failures or for waste that has been received and deemed nonconforming. Increases to oversight are established based on the severity of the nonconformance and issues observed at the generator locations.
- Evaluate the generator's other waste streams to determine whether waste streams or a subset of waste streams might be subject to the same type of nonconformance issue.
- Reject waste from acceptance into the IDF if conformance issues cannot be resolved.

3.0 WASTE ACCEPTANCE CRITERIA

This section identifies the IDF waste acceptance criteria.

3.1 GENERAL CRITERIA

The requirements identified in this section are general requirements that apply to acceptance of waste at IDF. Sections 3.2 and 3.3 specify additional requirements for LLW and MLLW, respectively.

3.1.1 Physical and Chemical Criteria

The following sections identify the physical and chemical criteria for acceptance of waste.

3.1.1.1 Chemical Compatibility

Waste shall be chemically compatible with the container it is placed in (WAC 173-303-630, "Use and Management of Containers").

3.1.1.2 Asbestos-Containing Waste

Asbestos-containing waste material shall be packaged in accordance with 40 CFR 61.150, "National Emission Standards for Hazardous Air Pollutants," "Standard for Waste Disposal for Manufacturing, Fabricating, Demolition, Renovation, and Spraying Operations." Wetting with water is allowed as long as the liquid does not exceed applicable free-liquid requirements.

3.1.1.3 Heat Generation

If heat generation from radiological decay in the waste package exceeds 3.5 W/m^3 (0.1 W/ft^3),[1] the package must be evaluated to ensure that the heat does not affect the integrity of the container or surrounding containers in storage and after disposal. This evaluation must be provided to and approved by the IDF waste acceptance team prior to waste shipment.

3.1.1.4 Gas Generation

Waste generators shall provide evidence of compliance with Chapter IV, Section G.1(d)4 in DOE M 435.1-1. When vents are required, a certificate of conformance shall be provided stating the vent model number that has been installed on the waste container and that the waste packaging meets the requirements of this section.

When LLW is packaged, vents or other measures shall be provided if the potential exists for pressurizing or generating flammable or explosive concentrations of gases within the waste container (Chapter IV, L.1.b in DOE M 435.1-1). Unless otherwise specified by IDF, a minimum 5-year time value shall be used to demonstrate compliance when performing gas generation calculations for LLW going directly to disposal.

If required, the following mitigating measures (or alternative measures approved by IDF) must be used for the control of hydrogen from radiolytic decomposition. Use an approved vent, as listed in Appendix C, "Approved Vents for Waste Containers," to this document or an alternative approved by IDF. Container liners and inner bags must be closed in a manner that allows gas to reach the vent filter (e.g., twist and tape method for bags). When 90 mm liners are used, the hole size used to vent the liner shall be documented. In addition to filtering, palladium or platinum catalyst packs may be used to control hydrogen concentrations in the container.

3.1.1.5 Compatibility of Waste and Liner System

Waste disposed in IDF must be compatible with the IDF liner system. An assessment will be performed by the IDF waste acceptance team on each waste stream to confirm the compatibility of the waste with the liner. In cases where a waste contains constituents that have not been evaluated previously for liner compatibility, testing by Method 9090 of SW-846 could be required.

Appendix D, "Chemical Constituents/Liner System Compatibility," to this document lists certain chemical constituents in concentrated form that have been evaluated and determined to be incompatible with the IDF disposal cell liner system.

[1] The heat generation limit is based on conservative assumptions and calculation methodology as presented in Appendix F.

3.1.2 Prohibited Waste

The following waste types are prohibited from shipment to IDF:

- Dangerous waste only
- MLLW having dangerous waste codes not listed on the Hanford Facility RCRA Permit (WA7890008967) "Part A Form" for the IDF (Operating Unit Group 11, Addendum A)
- Ignitable or reactive waste (WAC 173-303-090)
- Wastes containing free-standing liquids (Chapter IV, Sections G.1.d.2 and 10 in DOE M 435.1) unless free-standing liquids:
  - Have been removed by decanting or other methods
  - Have been mixed with sorbent or stabilized (solidified) so that free-standing liquid is no longer observed
  - Have otherwise been eliminated
  - Container is very small, such as an ampule
  - Container is a lab pack and is disposed in accordance with WAC 173-303-161, "Overpacked Containers (Labpacks)"
  - Container is designed to hold free liquids for use other than storage (e.g., battery or capacitor)
  - Have been approved by Ecology through the nondangerous liquid provision of WAC 173-303-140(4)(b)(v)

There could be cases in which small amounts of residual liquids are present in mixed waste containers because condensate has formed following packaging or free liquids remain in debris items (e.g., pumps, tubing) even after draining. When it is not practical to remove this residual liquid, the free liquid must be eliminated to the extent possible by adding a quantity of sorbent sufficient to absorb residual liquids as specified in Appendix E, "Void Fillers, Sorbents, and Stabilizing Materials," to this document.

Free liquid is determined by SW-846, Method 9095 (Paint Filter Liquids Test) (WAC 173-303-140(4)(b)) only for waste that has the potential for free liquid formation.

- Waste that does not comply with the requirement of Chapter IV, G.1.d.5 in DOE M 435.1-1. Waste in a gaseous form must be packaged such that the pressure does not exceed 1.5 atmospheres absolute at 20°C (68°F) (DOE M 435.1-1). Compressed gases as defined by 49 CFR 173.115, "Transportation," "Shippers—General Requirements for Shipments and Packagings," "Class 2, Divisions 2.1, 2.2, and 2.3—Definitions," shall not be accepted. Examples of compliance methods include puncturing containers and removing the valve mechanism from expended gas cylinders.
- Explosive waste, shock-sensitive waste, or pyrophoric waste. Waste that does not comply with the requirement of Chapter IV, G.1.d.3 in DOE M 435.1-1. Waste must not be readily capable of detonation or of explosive decomposition or reaction at anticipated pressures and temperatures, or of explosive reaction with water. Pyrophoric materials contained in waste shall be treated, prepared, and packaged to be nonflammable (Chapter IV, N.1 in DOE M 435.1-1). Waste containing <1 wt% pyrophoric material partially or completely dispersed in each package is not considered pyrophoric for the purposes of this requirement.

- Solid acid waste (WAC 173-303-140(4)(c)).
- Extremely hazardous as defined by WAC 173-303-040 unless allowed by RCW 70.105.050(2), "Disposal at Other than Approved Site Prohibited—Disposal of Radioactive Wastes."
- Organic/carbonaceous waste that does not meet WAC 173-303-140(4)(d).
- Nondebris waste that requires treatment prior to disposal.
- Class IV oxidizer waste.
- TRU content (as calculated per Section F2.0 in Appendix F, "Radiological Calculation Methods," of this document) shall not exceed 100 nCi/g (3,700 Bq/g) of waste (Chapter III, Section A in DOE M 435.1-1).
- *Comprehensive Environmental Response, Compensation, and Liability Act of 1980* waste.
- *Toxic Substances Control Act of 1976*-regulated polychlorinated biphenyl waste is prohibited except as specifically authorized under 40 CFR 761 or a U.S. Environmental Protection Agency (EPA)-issued Risk Based Disposal Authorization.
- Waste that does not comply with the requirement of Chapter IV, G.1.d.1 in DOE M 435.1-1. Waste must contribute to and not detract from achieving long-term stability of the facility, minimizing the need for long-term active maintenance, minimizing subsidence, and minimizing contact of water with waste. Void spaces within the waste and, if containers are used between the waste and its container shall be reduced to the extent practical (Chapter IV, G.1.d.1 in DOE M 435.1-1).
- Waste that does not comply with the requirement of Chapter IV, G.1.d.4 in DOE M 435.1-1. Waste must not contain or be capable of generating by radiolysis or biodegradation, quantities of toxic gases, vapors, or fumes harmful to the public or workers or disposal facility personnel, or harmful to the long-term structural stability of the disposal site (DOE M 435.1-1).
- Refrigerant-bearing equipment containing chlorofluorocarbons, unless chlorofluorocarbon removal has been completed (40 CFR 82, "Protection of Stratospheric Ozone").
- Waste, materials, or containers that may adversely affect waste handlers or compromise facility or waste container performance.
- Waste containing biological, pathogenic, or infectious material (including "any substance that may harbor or transmit pathogenic organisms" [e.g., septic tank sludge]) unless disinfected (10 CFR 61.56, "Licensing Requirements for Land Disposal of Radioactive Waste," "Waste Characteristics").
- Spent nuclear fuel or high-level waste.
- Non-LDR compliant MLLW debris waste that is not vitrified, mixed with a cementitious matrix, or encapsulated with grout, unless approved for acceptance by IDF on a case-by-case basis as specified in Section 3.3.2.
- Waste that is incompatible with the trench liner as defined in Section 3.1.1.5 (WAC 173-303-665, "Landfills").

3.2 LOW-LEVEL WASTE

The requirements for LLW are those presented in this section in addition to those in Section 2.0. These requirements are based on the IDF performance assessment (RPP-RPT-59958, *Performance Assessment for the Integrated Disposal Facility, Hanford Site, Washington*, hereinafter called the IDF PA).

3.2.1 Radiological Characterization

The major radionuclides in the waste and concentration of each major radionuclide must be established with sufficient sensitivity and accuracy to classify and manage waste properly in accordance with the radiological criteria (DOE M 435.1-1) listed in Appendix G, "Radiological Acceptance Limits," to this document.

3.2.2 Identification of Major Radionuclides

Radionuclide reporting is critical for compliance with the IDF PA (RPP-RPT-59958). The concentration of each major radionuclide must be established and compared to the Table G-1 in Appendix G reporting limit using process knowledge and/or sampling and analysis. Major radionuclides are defined as those radionuclides that meet any of the following conditions. Appendix F describes the calculational methods for determining these limits.

- Any TRU radionuclide present in the waste in concentration exceeding 1 nCi/g.
- Any fissionable radionuclide present in the waste in a quantity exceeding 0.1 fissile gram equivalent per container. Section 3.2.4.3, "Criticality Safety Limits," in this document describes the fissionable material content limits.
- For waste that has no detectable radiological activity but cannot be radiologically released, major radionuclides are those believed to contribute more than 1% each to the radiological activity based on available process knowledge. The estimated concentration of the radionuclides should be based on the limit of detection of the analysis method used.
- The amount of uranium-235 and uranium-238 in each waste container must be reported if there is at least 0.1 g of uranium-235 in the container or if either isotope is a major radionuclide. The amount of uranium-233 in each waste container must be reported if it contains at least 0.1 g of uranium-233.
- Any radionuclide that accounts for more than 1% of the total radiological activity of the waste must be reported. However, a radionuclide in concentration $<1.0\times10^{-6}$ Ci/m^3 and not otherwise reportable is exempt from reporting.

3.2.3 Methods for Establishing Radionuclide Inventory

The radionuclide inventory of a waste must be established using a method or combination of methods capable of identifying and quantifying the major radionuclides present. The methods chosen must provide adequate sensitivity and accuracy to ensure that the waste is categorized correctly (e.g., correct TRU determination). A graded approach (DOE M 435.1-1) should be applied when planning radiological characterization of waste streams. Using that approach, more frequent and detailed analysis is performed when a waste approaches one or more of the limits of these criteria. Conversely, waste that is far below applicable limits of these criteria would not require as extensive or frequent analysis. Use of the data quality objectives process (or a comparable process) in accordance with DOE M 435.1-1 should be used to ensure that the appropriate type, quantity, and quality of radiological characterization data are obtained.

Both direct and indirect methods can be used for characterization (DOE M 435.1-1). When indirect methods are used, these methods must be corroborated periodically with direct measurements. The frequency of corroborative analysis should be based on the variability of the waste generating

process, and the extent and consistency of previous analytical data. A graded approach should be applied when determining the appropriate type and frequency of corroborative analysis.

The following characterization methods can be used individually or in combination to establish the radionuclide inventory of the waste.

- **Process knowledge**—Process knowledge includes documented knowledge of the radioactive materials used and the processes that contributed to the radiological content of the waste, along with historical analysis of waste and radiological contamination from the process. Process knowledge can be used to establish the suspected major radionuclides in a waste stream. In addition, process knowledge can be used to eliminate from further consideration those radionuclides not present in sufficient concentration to be major radionuclides, as long as the basis of this determination is documented.

  If process knowledge alone is used to determine that a major radionuclide is not present in a waste stream at the reporting limit, the basis for this determination must be clearly documented. If available analysis techniques cannot detect a radionuclide at its reporting limit, the concentration could be estimated using a combination of process knowledge, scaling factors, and analytical detection limits.

- **Radionuclide material accountability**—The content of a given radionuclide in a waste can be determined by documented logs detailing the mass or activity of that radionuclide added to and leaving the waste in a controlled process. In addition, data relating the total inventory of a radionuclide in a process or facility can be used to determine the radionuclide inventory but must be corroborated periodically with direct measurement methods.

- **Field and laboratory analysis methods**—Field and laboratory analysis methods, such as nondestructive assay, radiochemical analysis, and surveys with field instruments, must be selected as appropriate to detect and quantify the major radionuclides with adequate sensitivity and accuracy for waste classification. Analysis methods that measure gross activity (i.e., not radionuclide specific) must be used in conjunction with other methods to determine the relative concentration (scaling factors) of each suspected radionuclide and must be corroborated periodically with radionuclide-specific analysis.

- **Computer modeling**—Computer modeling, applied appropriately, could be used in conjunction with other methods for radiological characterization. An individual who is knowledgeable and experienced in the use and limitations of the model must perform the modeling. The assumptions and measurements used as inputs to computer modeling must be documented. The computer software must be controlled in a manner that meets conventional quality assurance requirements. Computer models must be corroborated periodically with direct measurement methods.

- **Scaling factors**—Scaling factors can be used to relate the concentration of a readily measured radionuclide to more difficult-to-measure radionuclides. Scaling factors must be developed from one of the previous methods and must be corroborated periodically with radionuclide-specific analysis.

Other methods of radiological characterization could be used but must be documented clearly and approved by IDF. Documentation of the method must include a detailed description of the method, radionuclides identifiable by the method, and a discussion of precision, accuracy, quality assurance, and quality control methods.

3.2.4 Radiological Acceptance Limits

This section identifies the radiological acceptance limits for IDF.

3.2.4.1 IDF Performance Assessment Limits and Waste Forms

Waste disposed in IDF must meet the radiological performance objectives established in DOE O 435.1 and DOE M 435.1-1. The IDF PA (RPP-RPT-59958) calculated the concentration limits for the radionuclides and waste forms expected to be disposed in IDF. The radionuclide concentration limits are listed in Table G-1 in Appendix G. The LLW and MLLW inventories, volumes, and waste forms planned for disposal in the IDF are summarized in the IDF PA (RPP-RPT-59958).

Waste shipments having radionuclide concentrations above the limits in Table G-1 in Appendix G or in waste forms different than what was modelled in the IDF PA may be approved on a case-by-case basis through the waste profile review process if overall disposal facility performance objectives will not be compromised as evaluated using the IDF-PRO-EN-54165, *IDF Unreviewed Disposal Question (UDQ)*, procedure.

3.2.4.2 IDF Hazard Categorization Limits

IDF intends to operate the facility as a DOE-STD-1027-2018, *Hazard Categorization of DOE Nuclear Facilities*, Less Than Hazard Category 3 (LTHC-3) radiological facility by maintaining the radiological inventory sum of ratios (SOR) for the unburied waste packages less than the adjusted Hazard Category (HC)-3 threshold quantity values in accordance with IDF-00001, *Integrated Disposal Facility Final Hazard Categorization*. Alternate release fractions for certain waste forms (i.e., vitrified, mixed with a cementitious matrix, or encapsulated grout) can be used to adjust threshold quantities.

To ensure that the IDF LTHC-3 hazard categorization remains bounding, waste packages with an initial, unadjusted HC-2 or HC-3 SOR radiological inventory will be reviewed for acceptance by the IDF waste acceptance team on a case-by-case basis to determine if the final, adjusted hazard categorization SOR is LTHC-3 in accordance with IDF-00001. The waste generator shall provide the radionuclide inventory and waste form data needed to perform the LTHC-3 evaluation.

3.2.4.3 Criticality Safety Limits

The acceptable fissile and fissionable material is defined in Section 2.1.2 of HNF-7098, *Criticality Safety Program*:

- LLW material containing <100 nCi/g (waste) of transuranic nuclides with half-lives greater than 20 years and no enriched uranium.
- Packaged waste material containing ≤15 g uranium-235 and/or plutonium-239 in each 55 gal or larger waste drum/package. The mass value for this control may be interpreted as fissile grams equivalent (FGE), where the value is assumed to be derived from the data in DOE, 2013, *CH-TRAMPAC*, contact-handled transuranic waste authorized method for payload control (CH-TRAMPAC) (plutonium based).
- Fifteen grams or less of americium-241 or any fissile nuclide with atomic number <95 (uranium-233, uranium-235, plutonium-239, and plutonium-241).
- One-half gram of 242 mAm, 1.2 g of 245 Cm, 0.6 g of 251 Cf, or 2 g or less of any other fissile nuclide with atomic number ≥95.
- Depleted and natural uranium in any amount.
- Uranium solutions, compounds, and metal (if homogeneous, not latticed) are enriched to ≤1.0 wt% uranium-235. All mass volumes are nominal.

3.3 MIXED LOW-LEVEL WASTE

MLLW is a dangerous waste that also contains LLW. MLLW with only dangerous waste codes identified in the Hanford Facility RCRA Permit (WA7890008967) "Part A Form" for the IDF (Operating Unit Group 11, Addendum A) is accepted. The requirements for MLLW are those presented in this section in addition to those in Sections 2.0 and 3.2.

3.3.1 LDR Waste Treatment Requirements

MLLW subject to RCRA LDR (40 CFR 268, "Land Disposal Restrictions," incorporated by reference at WAC 173-303-140(2)) and/or the Washington State LDR (WAC 173-303-140(4)) must be demonstrated to meet applicable treatment standards and requirements prior to shipment to the IDF, unless approved otherwise by the IDF waste acceptance team as specified in Section 3.3.2.

- The treatment and performance standard for dangerous/hazardous debris is specified in 40 CFR 268.45. Dangerous/hazardous debris must be treated either by the waste specific standards in 40 CFR 268.40, "Applicability of Treatment Standards," for each waste contaminating the debris or standards presented in the alternative treatment standards for dangerous/hazardous debris table found in 40 CFR 268.45.
- Hazardous debris that is managed in accordance with the alternative treatment standards for hazardous debris (40 CFR 268.45) does not require sampling and analysis for adequate physical/chemical characterization.
- For waste that has been treated to concentration-based treatment standards for specific hazardous constituents under 40 CFR 268, the waste generator or treatment facility shall have the waste tested at a Hanford Site laboratory or another independent laboratory to comply with the land disposal facility requirements in 40 CFR 268.7(c).
- For waste that has treatment standards that are not concentration based, the waste generator and/or treatment facility must demonstrate that the waste meets the applicable treatment standards using process knowledge and/or by waste analysis, as required by the applicable sections of 40 CFR 268 and WAC 173-303-140.
- Waste generators are required to submit all information, notifications, and certifications described in WAC 173-303-380(1)(j), (k), and (o), "Facility Recordkeeping," and maintain LDR records in accordance with WAC 173-303-380(1)(m).
- An alternative to treatment of dangerous/hazardous waste to meet the LDR standards and allow for disposal of waste in IDF is a determination of equivalent treatment (40 CFR 268.42(b), "Treatment Standards Expressed as Specified Technologies") or a treatability variance (40 CFR 268.44, "Variance from a Treatment Standard"). Appropriate documentation is required before shipment of any dangerous/hazardous waste to the IDF that has previously been exempted from meeting the LDR treatment standard.

3.3.2 LDR Treatment Performed at IDF

The following exception can be made to the requirement of treating the waste prior to shipment to the IDF. Nondebris waste cannot be treated at the IDF. Hazardous debris that can be treated using immobilization technologies (i.e., macroencapsulation, microencapsulation, and sealing) may be treated at the IDF if the untreated debris meets the radiological acceptance limits specified in Section 3.2.4.

3.4 CONFLICTING REQUIREMENTS

Cases might arise where two or more similar requirements or limits occur in the acceptance criteria.

All requirements and limits must be met. If it appears that one requirement or limit will be less restrictive than others, the more restrictive one must be met.

4.0 PACKAGING CRITERIA

Waste to be disposed of at the IDF is to be packaged, except for waste that cannot be containerized (e.g., failed or spent locally shielded low-activity waste melters, long-length equipment) and approved by the IDF waste acceptance team (Section 4.5). Unless exempted, waste packages must comply with the requirements in Chapter IV, Section L.1.a in DOE M 435.1, WAC 173-303-630, and the criteria specified in Appendix H, "Containers, Coatings, and Liners," to this document. The following sections define the packaging criteria for acceptance.

4.1 PACKAGING CONSTRUCTION

Containers must meet one of the following criteria to ensure compliance with CHPRC-03378, *Preliminary Fire Hazards Analysis for the Integrated Disposal Facility*:

- Constructed of metal, concrete, or masonry.
- Constructed of rigid plastic that has a maximum flame spread rating of 25 when tested by a nationally recognized testing laboratory to the most current version of ASTM E-84, *Standard Test Method for Surface Burning Characteristics of Building Materials*. These containers will only be accepted if approved by the IDF waste acceptance team.
- Other containers as authorized under CHPRC-03378 and approved by the IDF waste acceptance team.
- Sacrificial rigging shall not contain regulated materials (e.g., lead).
- Containers shall be compatible with the waste and maintain containment during handling and storage before disposal (WAC 173-303-630). Where required, an appropriate combination of protective coatings and liners shall be used to prevent loss of container integrity. The general requirements for the selection of compatible containers, coatings, and liners are addressed in Appendix H of this document.

4.2 CONDITION OF CONTAINERS

Outer containers shall be in good condition, with no visible cracks, holes, dents, bulges, pit or scale corrosion, or other damage that could compromise container integrity (WAC 173-303-630). Minor external surface rust that can be sanded or brushed off will be acceptable.

4.3 HANDLING OF PACKAGES

Packages must be configured for safe unloading by forklift or crane. Alternate means of unloading could be allowed with approval from IDF. Packages that must be unloaded shall be equipped with a lifting system designed to lift the fully loaded package safely. Slings and lifting devices shall meet the requirements of the most current version of DOE/RL-92-36, *Hanford Site Hoisting and Rigging Manual*. For packages that have special unloading requirements (e.g., grapple for ILAW glass containers), information must be provided to IDF concerning the methods for unloading before the shipment is scheduled. Sacrificial rigging shall be provided for remote-handled waste packages. Rigging shall not contain regulated materials such as lead.

4.4 LABELING

Containers sent to the IDF must be labeled for identification and to communicate information needed for proper waste management. The general requirements for labels are addressed in Appendix I, "Labeling of Waste Containers," of this document. For unusual waste forms, special labeling provisions can be arranged with the IDF.

4.5 NONCONTAINERIZED WASTE

Certain types of waste can be disposed without packaging in containers (e.g., failed or spent locally shielded low-activity waste melters, long-length equipment) with IDF approval on a case-by-case basis. Any mitigating measures required to meet the conditions of the safety basis will be determined on a case-by-case basis.

Waste types such as activated metal or internally contaminated equipment that are not surface contaminated with readily dispersible radiological or hazardous chemical contamination may be considered containerized. As such, they are subject to the radionuclide and chemical concentration requirements for containerized waste.

4.6 MINIMIZATION OF SUBSIDENCE

Except for packages where IDF will perform void filling activities, waste shall be in a form that minimizes settling and subsidence of the IDF (Chapter IV, Section G.1.d.1 in DOE M 435.1-1; WAC 173-303-665). For packages where IDF personnel will perform void filling, the generator shall provide packages with void filling ports approved by the IDF waste acceptance team, and the package shall be configured to facilitate successful void filling.

Waste accepted for disposal shall meet one of the following minimization of subsidence criteria at the time of disposal:

- Packaged in a structurally stable corrosion resistant container approved by the IDF waste acceptance team that will maintain its physical dimensions and form under the expected disposal conditions, such as weight of overburden and equipment (minimum composite compressive strength of 85 psi[2]).
- Compactable waste that has been compacted to a minimum of 85 psi[2].
- Be a solid waste with a minimum "confined" compressive strength of 85 psi[2].
- Stabilized in concrete or other stabilization agent specified in Appendix E of this document with a minimum composite compressive strength of 85 psi[2].
- Containerized waste, except for containers within a structurally stable corrosion resistant container approved by the IDF waste acceptance team, must be filled at least 90% of the internal volume of the container when placed in the disposal unit.
- Noncontainerized waste must be a solid waste with a minimum "confined" compressive strength of 85 psi[2].

4.7 PACKAGE CONTAMINATION LIMITS

Removable contamination on accessible surfaces of waste packages shall not exceed the limits listed in Table 2-2 of CHPRC-00073, *CHPRC Radiological Control Manual*.

---

[2] 85 psi is the maximum expected loading at the bottom of the IDF disposal cells (Appendix C.8.a in RPP-18486, *Integrated Disposal Facility (IDF), Phase I Critical Systems Design Report*).

Use of fixatives may be allowed with approval from the IDF radiological control manager to meet the criteria. Use of fixatives on returnable equipment will result in the items being controlled as radioactive material. For returnable overpacks, the contamination limits and use of fixatives also apply to the outside of the inner package. Fixed contamination levels should not exceed of 0.5 mR/hr (contact open window uncorrected).

4.8 PACKAGE DOSE RATE LIMITS

Containers with dose rates ≤2 mSv/hr (200 mrem/hr) at contact, <1 mSv/hr (100 mrem/hr) at 30 cm (1 ft), and <0.1 mSv/hr (10 mrem/hr) at 2 m (6.5 ft) are acceptable at the IDF. Contact-handled containers (as defined in Section 5.0, "Definitions") exceeding these limits require container-specific review and approval.

Remote-handled waste is acceptable at the IDF if approved through both a waste stream profile and a container-specific shipment. Remote-handled waste shall meet the applicable DOT dose rate restrictions or an approved package-specific safety document. Remote-handled waste shall be configured for unloading such that personnel exposures are maintained ALARA.

4.9 CLASSIFIED AND ACCOUNTABLE NUCLEAR MATERIAL

Radioactive waste to which access has been limited for national security reasons and which cannot be declassified shall be managed in accordance with the requirements of DOE O 473.3A, *Protection Program Operations*, and DOE O 470.4B, *Safeguards and Security Program* (DOE M 435.1-1).

During the acceptance process, the waste generator shall notify the IDF waste acceptance team of any classified waste. Classified waste is managed on a case-by-case basis.

A DOE/NRC 741 form must be completed for waste that contains accountable nuclear material (DOE O 470.4B).

4.10 SECURING WASTE AND SHIELDING

Drums on pallets shall be strapped together prior to loading on the shipping transport vehicle. Large heavy items must be secured in containers by bracing, blocking, or other means to prevent damage to the container during handling and transportation. When shielding is used to reduce the surface dose rate of a waste container, the shielding and waste must be secured to prevent shifting during handling and transportation.

4.11 WASTE SHIPMENT RECORDS

The waste generator shall maintain a detailed record of the contents, volume, and weight as well as any added void fillers, sorbents, stabilization agents, or solidification agents for each waste shipment. For containerized waste, the container type, weight, internal and external volume, any shielding provided, liner information (including vent hole size where used), and the date packaged must be recorded. In the case of lab packs, the record shall include the exact number, type, and volume of inner containers.

5.0 DEFINITIONS

Acceptable knowledge. Characterization information collected by a waste generator to meet waste management requirements and determined to be adequate by the disposal unit. See also definition of "knowledge" and "process knowledge."

Asbestos-containing waste material. Mill tailings or any waste that contains commercial asbestos and is generated by a source subject to 40 CFR 61, Subpart M, "National Emissions Standard for Asbestos." This term includes filters from control devices, friable asbestos waste material, and bags or other similar packaging contaminated with commercial asbestos. As applied to demolition and renovation operations, this term also includes regulated asbestos-containing material waste and waste materials contaminated with asbestos including disposable equipment and clothing. (40 CFR 61.141, "Definitions")

Byproduct material. (1) Any radioactive material (except special nuclear material) yielded in or made radioactive by exposure to the radiation incident to the process of producing or utilizing special nuclear material, and (2) the tailings or wastes produced by the extraction or concentration of uranium or thorium from any ore processed primarily for its source material content. (DOE M 435.1-1)

Chelating compound. Amine polycarboxylic acids (e.g., ethylenediamine tetra-acetic acid, diethylenetriaminepentaacetic acid), hydroxy-carboxylic acids, and polycarboxylic acids (e.g., citric acid, carbolic acid, and glucinic acid). (10 CFR 61.02, "Definitions")

Class IV oxidizer. An oxidizer that can undergo an explosive reaction due to contamination or exposure to thermal or physical shock. In addition, the oxidizer will enhance the burning rate and could cause spontaneous ignition of combustible materials. (ICBO 1997, *Uniform Building Code*)

Combustible material. Any material that does not meet the definition of noncombustible waste.

Contact-handled. Packaged waste whose external surface dose rate does not exceed 2 mSv/hr (200 mrem/hr), except that packages larger than 208 L (55 gal) could have a marked point on the bottom or side with a surface dose rate up to 10 mSv/hr (1,000 mrem/hr).

Container. Any portable device in which a material is stored, transported, treated, disposed, or otherwise handled (WAC 173-303-040). In this document, this term also describes the device into which immobilized low-activity waste melt is poured.

Dangerous waste. Solid waste designated in WAC 173-303-070 through -100 as dangerous or extremely hazardous waste, or mixed waste. (WAC 173-303-040)

Debris. Solid material exceeding a 60 mm particle size that is intended for disposal and that is a manufactured object; or plant or animal matter; or natural geologic material (40 CFR 268.2(g), "Definitions Applicable in This Part"). However, the following materials are not debris: any material for which a specific treatment standard is provided in 40 CFR 268, Subpart D, "Treatment Standards," namely lead acid batteries, cadmium batteries, and radioactive lead solids; process residuals such as smelter slag and residues from the treatment of waste, wastewater, sludges, or air emission residues; and intact containers of hazardous waste that are not ruptured and that retain at least 75% of their original volume. A mixture of debris that has not been treated to the standards provided by 40 CFR 268.45, "Treatment Standards for Hazardous Debris," and other material is subject to regulation as debris if the mixture is comprised primarily of debris, by volume, based on visual inspection.

Disposal facility. The land, structures, and equipment comprising a facility at which hazardous waste is intentionally placed into or on any land or water, and at which waste will remain after closure.

Dose-equivalent curie. A method of normalizing the radiotoxicity of various radionuclides to plutonium-239 for use in establishing that operations remain within approved safety bases at certain Hanford Site waste management units. The normalization is based on the relative committed effective dose equivalent from inhalation of each radionuclide to that of plutonium-239 using the conversion

factors from ICRP Publication 71, "Age Dependent Doses to Members of the Public from Intake of Radionuclides: Part 4 Inhalation Dose Coefficients."

Explosive waste. A waste that meets the definition of WAC 173-303-090(7)(a)(vi), (vii) or (viii).

Extremely hazardous waste. Dangerous waste and mixed waste designated in WAC 173-303-100 as extremely hazardous. (WAC 173-303-040)

Fissile material. Material made up of radionuclides that will sustain a chain reaction by thermal (slow) neutron induced fission. For the Hanford Site criticality safety program, uranium-233, uranium-235, plutonium-239, and plutonium-241 are the primary radionuclides of interest. In addition, plutonium-238 is considered fissile material for transportation under 49 CFR 173.

Fissionable materials. Substances containing radionuclides capable of sustaining a nuclear fission chain reaction (regardless of neutron energy). Such material could be fissionable only by nature of its form, configuration, or environment. This includes but is not limited to uranium-233, uranium-235, plutonium-238, plutonium-239, plutonium-240, plutonium-241, neptunium-237, americium-241, and curium-244.

Free liquids. Those liquids determined to be present in a waste as defined by SW-846.

Generator. Any person by site whose act or process produces radioactive or mixed waste or whose act first causes a waste to become subject to regulation under WAC 173-303 (WAC 173-303-040). The term generator also includes any person or organization that manages a dangerous waste at the generating site on behalf of the generator.

Hazardous waste. Solid waste designated by 40 CFR 261, "Identification and Listing of Hazardous Waste," and regulated as a hazardous waste and/or mixed waste by EPA.

Immobilized low-activity waste. The low-activity fraction of Hanford Site tank waste that has been immobilized.

Infectious waste. Any waste that contains or is suspected to contain pathogenic microorganisms infectious to humans, including: cultures and stocks of infectious agents, human blood and body fluids, contaminated animal carcasses, body parts, bedding exposed to infectious agents, and human pathological waste. Waste that has been treated by heat (e.g., incineration, autoclaving) or chemical disinfectants to destroy pathogenic organisms is not considered infectious waste.

Sufficient information about a waste to reliably substitute for direct testing of the waste. To be sufficient and reliable, the "knowledge" used must provide information necessary to manage the waste in accordance with the requirements of this chapter.

> Note: "Knowledge" may be used by itself or in combination with testing to designate a waste pursuant to WAC 173-303-070 (3)(c)((e)), or to obtain a detailed chemical, physical, and/or biological analysis of a waste as required in WAC 173-303-300(2). (WAC 173-303-040)

Lab pack. A packaging method where a number of inner containers of waste are packaged into an outer drum as specified in 49 CFR 173.12(b), "Exceptions for Shipment of Waste Materials." For this document, the term also could be used for DOT Class 7 materials packaged in the same manner.

Land disposal restrictions. The restrictions and requirements for land disposal of hazardous or dangerous waste as specified in 40 CFR 268 and WAC 173-303-140. (Refer to definitions for RCRA land disposal restrictions and Washington State land disposal restrictions.)

Low-activity waste. Radioactive tank waste supernate that has been treated to remove radionuclides, principally cesium, strontium, and actinides.

Low-level waste (LLW). Radioactive waste that is not high-level radioactive waste, spent nuclear fuel, transuranic waste, byproduct material (as defined in Section 11e.(2) of the *Atomic Energy Act of 1954*), or naturally occurring radioactive material. (DOE O 435.1)

Major radionuclides. Those radionuclides in a waste that contribute significantly to the overall hazards of the waste, including criticality and human exposure by various pathways, as the waste is managed.

Mixed low-level waste (MLLW). Waste that meets the definition of both low-level and mixed waste.

Mixed waste. A dangerous, extremely hazardous, or acutely hazardous waste that contains both a nonradioactive hazardous component and, as defined by 10 CFR 20.1003, "Standards for Protection Against Radiation," "Definitions," source, special nuclear, or by-product material subject to the *Atomic Energy Act of 1954*. (WAC 173-303-040)

Noncontainerized waste. Waste that is not containerized for disposal, such as immobilized low-activity melters and long-length equipment.

Onsite. Any property within the Hanford Site boundary.

> Note: The DOT and RCRA regulations have varying definitions of "onsite." The use of the term in this document does not imply those precise meanings of the term.

Technical safety requirements. Those requirements that define the conditions, safe boundaries, and bases thereof and the management or administrative controls required to ensure the safe operation of a nuclear facility.

Organic liquid. A chemical compound having carbon-carbon chemical bonds and that is a liquid at standard temperature and pressure. Typical organic liquids include organic solvents, petroleum oils, and synthetic oils.

Package. A filled immobilized low-activity waste product container, after cooling and solidification. The constituent parts of a package are a sealed, stainless-steel product container enclosing a poured glass waste form and an optional filler material of sand or glass.

Performance assessment. An analysis of a radioactive waste disposal facility conducted to demonstrate there is a reasonable expectation that performance objectives established for the long-term protection of the public and the environment will not be exceeded following closure of the facility. (DOE M 435.1-1)

Polychlorinated biphenyl. Any chemical substance limited to the biphenyl molecule chlorinated to varying degrees or any combination of substances that contains such substance. (40 CFR 761.3, "Definitions")

Process knowledge. Knowledge the waste generator applies to a solid waste to determine if it is a dangerous or mixed waste in light of the materials or the processes used, when such knowledge can be demonstrated to be sufficient for determining whether a solid waste is designated properly. Process knowledge includes information on waste obtained from existing published or documented waste analysis data or studies conducted on mixed waste from processes similar to that which generated the waste. Process knowledge for mixed waste also could include information obtained from surrogate material. See also the definition of "knowledge" and the definition of "acceptable knowledge."

Pyrophoric material. A liquid or solid that, even in small quantities and without an external ignition source, can ignite within 5 minutes after coming in contact with air when tested as specified by 49 CFR 173.124, "Class 4, Divisions 4.1, 4.2 and 4.3—Definitions."

Qualified analytical data. Waste analyses data that are not fully compliant with an approved sampling and/or analysis method (e.g., where quality assurance/quality control deficiencies were identified from the sampling and/or analysis of the waste).

Radioactive waste. Any garbage, refuse, sludge, and other discarded material, including solid, liquid, semisolid, or contained gaseous material that must be managed for its radioactive content. (DOE M 435.1-1)

Remote-handled. Packaged waste whose external surface dose rate exceeds the limits for contact-handled waste.

***Resource Conservation and Recovery Act of 1976* (RCRA) land disposal restrictions**. The requirements and restrictions for land disposal of hazardous waste codified in 40 CFR 268.

Secular equilibrium. Equilibrium that occurs between a parent radionuclide and daughter radionuclide where the half-life of the parent is significantly longer than the daughter.

Shock-sensitive waste. Reactive waste meeting the definition of WAC 173-303-090(7)(a)(vii) (waste is readily capable of detonation or explosive composition or reaction at standard temperature and pressure).

Solidification. See "Stabilization."

Sorbent. A material used to soak up free liquids by either adsorption or absorption, or both.

Spent nuclear fuel. Fuel that has been withdrawn from a nuclear reactor following irradiation, the constituent elements of which have not been separated by reprocessing. Test specimens of fissionable material irradiated for research and development only, and not production of power or plutonium, may be classified as waste, and managed in accordance with the requirements of DOE O 435.1 when it is technically infeasible, cost prohibitive, or would increase worker exposure to separate the remaining test specimens from other contaminated material. (DOE M 435.1-1)

Stabilization and Solidification. Techniques that limit the solubility and mobility of dangerous waste constituents. Solidification immobilizes a waste through physical means and stabilization immobilizes the waste by bonding or chemically reacting with the stabilizing material (WAC 173-303-040). Note also stabilization is to used meet land disposal restrictions when the specific definition of Table 1 in 40 CFR 268.42, "Treatment Standards Expressed as Specified Technologies," is applicable to the waste.

State-only dangerous waste. Any waste that is regulated as a dangerous waste under WAC 173-303 but is not regulated as a hazardous waste under 40 CFR 261. (WAC 173-303-040)

Storage. The holding of waste for a temporary period. (WAC 173-303-040; DOE O 435.1)

Toxic. Having the properties to cause or to significantly contribute to death, injury, or illness of humans or wildlife. (WAC 173-303-040)

Toxic Substances Control Act of 1976. Any polychlorinated biphenyls containing waste that is regulated under the *Toxic Substances Control Act of 1976* requirements codified in 40 CFR 761.

Transuranic waste. Waste containing more than 100 nCi of alpha-emitting transuranic isotopes per gram of waste, with half-lives >20 years, except for (1) high-level waste; (2) waste that the Secretary of Energy has determined, with the concurrence from the EPA administrator, does not need the degree of

isolation required by the disposal regulations of 40 CFR 191; or (3) waste that the U.S. Nuclear Regulatory Commission has approved for disposal on a case-by-case basis in accordance with 10 CFR 61. (DOE O 435.1)

Treatment. The physical, chemical, or biological processing of dangerous waste to make such waste nondangerous or less dangerous, safer for transport, amenable for energy or material resource recovery, amenable for storage, or reduced in volume, with the exception of compacting, repackaging, and sorting as allowed under WAC 173-303-400(2) "Interim Status Facility Standards," and WAC 173-303-600(3), "Final Facility Standards." (WAC 173-303-040)

U.S. Department of Energy. Operates the Hanford Site and may include the DOE, Richland Operations Office; DOE, Office of River Protection; DOE-Headquarters; and/or DOE-designated contractor representatives.

Washington State land disposal restrictions. The additional state-only land disposal restrictions of WAC 173-303-140(4) applicable to state-only dangerous waste for the disposal in Washington State.

Waste stream. A waste or group of wastes from a process or a facility with similar physical, chemical, or radiological properties. (DOE O 435.1)

6.0 REFERENCES

10 CFR 20.1003, "Standards for Protection Against Radiation," "Definitions," *Code of Federal Regulations*. Available at: https://www.govinfo.gov/content/pkg/CFR-2000-title10-vol1/xml/CFR-2000-title10-vol1-sec20-1003.xml.

10 CFR 61, "Licensing Requirements for Land Disposal of Radioactive Waste," *Code of Federal Regulations*. Available at: https://www.govinfo.gov/content/pkg/CFR-2010-title10-vol2/xml/CFR-2010-title10-vol2-part61.xml.

61.02, "Definitions."

61.56, "Waste Characteristics."

10 CFR 830, "Nuclear Safety Management," *Code of Federal Regulations*. Available at: https://www.govinfo.gov/content/pkg/CFR-2011-title10-vol4/xml/CFR-2011-title10-vol4-part830.xml.

Subpart A, "Quality Assurance Requirements."

830.122, "Quality Assurance Criteria."

10 CFR 835, "Occupational Radiation Protection," *Code of Federal Regulations*. Available at: https://www.govinfo.gov/content/pkg/CFR-2011-title10-vol4/xml/CFR-2011-title10-vol4-part835.xml.

40 CFR 61, "National Emission Standards for Hazardous Air Pollutants," *Code of Federal Regulations*. Available at: https://www.govinfo.gov/content/pkg/CFR-2003-title40-vol8/xml/CFR-2003-title40-vol8-part61.xml.

61.141, "Definitions."

61.150, "Standard for Waste Disposal for Manufacturing, Fabricating, Demolition, Renovation, and Spraying Operations."

Subpart M, "National Emissions Standard for Asbestos (61.140–61.157).

40 CFR 82, "Protection of Stratospheric Ozone," *Code of Federal Regulations*. Available at: https://www.govinfo.gov/content/pkg/CFR-2012-title40-vol18/xml/CFR-2012-title40-vol18-part82.xml.

40 CFR 261, "Identification and Listing of Hazardous Waste," *Code of Federal Regulations*. Available at: https://www.govinfo.gov/content/pkg/CFR-2016-title40-vol28/xml/CFR-2016-title40-vol28-part261.xml.

40 CFR 268, "Land Disposal Restrictions," *Code of Federal Regulations*. Available at: https://www.govinfo.gov/content/pkg/CFR-2004-title40-vol25/xml/CFR-2004-title40-vol25-part268.xml.

268.2, "Definitions Applicable in This Part."

268.7, "Testing, Tracking, and Recordkeeping Requirements for Generators, Treaters, and Disposal Facilities."

268.9, "Special Rules Regarding Wastes that Exhibit a Characteristic."

Subpart D, "Treatment Standards."

268.40, "Applicability of Treatment Standards."

268.42, "Treatment Standards Expressed as Specified Technologies."

268.44, "Variance from a Treatment Standard."

268.45, "Treatment Standards for Hazardous Debris."

40 CFR 761, "Polychlorinated Biphenyls (PCBs) Manufacturing, Processing, Distribution in Commerce, and Use Prohibitions," *Code of Federal Regulations*. Available at: https://www.govinfo.gov/content/pkg/CFR-2017-title40-vol34/xml/CFR-2017-title40-vol34-part761.xml.

761.3, "Definitions."

49 CFR, "Transportation," *Code of Federal Regulations*. Available at:
https://www.govinfo.gov/content/pkg/CFR-2009-title49-vol1/xml/CFR-2009-title49-vol1.xml.
https://www.govinfo.gov/content/pkg/CFR-2009-title49-vol2/xml/CFR-2009-title49-vol2.xml.
https://www.govinfo.gov/content/pkg/CFR-2009-title49-vol3/xml/CFR-2009-title49-vol3.xml.
https://www.govinfo.gov/content/pkg/CFR-2009-title49-vol4/xml/CFR-2009-title49-vol4.xml.
https://www.govinfo.gov/content/pkg/CFR-2009-title49-vol5/xml/CFR-2009-title49-vol5.xml.
https://www.govinfo.gov/content/pkg/CFR-2009-title49-vol6/xml/CFR-2009-title49-vol6.xml.
https://www.govinfo.gov/content/pkg/CFR-2009-title49-vol7/xml/CFR-2009-title49-vol7.xml.
https://www.govinfo.gov/content/pkg/CFR-2010-title49-vol8/xml/CFR-2010-title49-vol8.xml.
https://www.govinfo.gov/content/pkg/CFR-2010-title49-vol9/xml/CFR-2010-title49-vol9.xml.

173, "Shippers—General Requirements for Shipments and Packagings."

173.12, "Exceptions for Shipment of Waste Materials."

173.115, "Class 2, Divisions 2.1, 2.2, and 2.3—Definitions."

173.124, "Class 4, Divisions 4.1, 4.2 and 4.3—Definitions."

ASTM E-84, *Standard Test Method for Surface Burning Characteristics of Building Materials*, American Society for Testing and Materials, West Conshohocken, Pennsylvania.

Atomic Energy Act of 1954, Pub. L. 83-703 as amended, 42 USC 2011 et seq., 68 Stat. 919. Available at: https://www.govinfo.gov/content/pkg/STATUTE-68/pdf/STATUTE-68-Pg919.pdf#page=30.

CHPRC-00073, 2017, *CHPRC Radiological Control Manual*, Rev. 12, CH2M HILL Plateau Remediation Company, Richland, Washington.

CHPRC-03378, 2018, *Preliminary Fire Hazards Analysis for the Integrated Disposal Facility*, Rev. 0, CH2M HILL Plateau Remediation Company, Richland, Washington.

Comprehensive Environmental Response, Compensation, and Liability Act of 1980, 42 USC 9601 et seq., Pub. L. 107-377, December 31, 2002. Available at: https://www.csu.edu/cerc/researchreports/documents/CERCLASummary1980.pdf.

DOE, 2013, *CH-TRAMPAC*, Rev. 4, U.S. Department of Energy, Carlsbad Field Office, Carlsbad, New Mexico.

DOE, 2018, *Operating Disposal Authorization Statement for the Integrated Disposal Facility, Hanford Site, Washington*, Rev. 0, U.S. Department of Energy, Washington D.C.

DOE M 435.1-1 Chg 2 (Admin Chg), 2011, *Radioactive Waste Management Manual*, U.S. Department of Energy, Washington, D.C. Available at: https://www.directives.doe.gov/directives-documents/400-series/0435.1-DManual-1-chg2-AdmChg.

DOE O 414.1D, 2011, *Quality Assurance*, U.S. Department of Energy, Washington, D.C. Available at: https://www.directives.doe.gov/directives-documents/400-series/0414.1-BOrder-d/@@images/file.

DOE O 435.1 Chg 1, 2007, *Radioactive Waste Management*, U.S. Department of Energy, Washington, D.C. Available at: https://www.directives.doe.gov/directives-documents/400-series/0435.1-BOrder-chg1-PgChg.

DOE O 470.4B Chg 1, 2011, *Safeguards and Security Program*, U.S. Department of Energy, Washington, D.C. Available at: https://www.directives.doe.gov/directives-documents/400-series/0470.4-BOrder-b-admchg1.

DOE O 473.3A Chg 1 (Min Chg), 2018, *Protection Program Operations*, U.S. Department of Energy, Washington, D.C. Available at: https://www.directives.doe.gov/directives-documents/400-series/0473-3-border-a-chg1-minchg.

DOE-STD-1027-2018 Chg Notice 1, 2019, *Hazard Categorization of DOE Nuclear Facilities*, U.S. Department of Energy, Washington, D.C. Available at: https://www.standards.doe.gov/standards-documents/1000/1027-astd-2018-cn1.

DOE-STD-5002-2017, 2017, *Disposal Authorization Statement and Tank Closure Documentation*, U.S. Department of Energy, Washington, D.C. Available at https://www.standards.doe.gov/standards-documents/5000/5002-astd-2017.

DOE/RL-92-36, 2009, *Hanford Site Hoisting and Rigging Manual*, Rev. 1, U.S. Department of Energy, Washington, D.C.

HNF-7098, 2009, *Criticality Safety Program*, Rev. 18, CH2M HILL Plateau Remediation Company, Richland, Washington.

ICBO, 1997, *Uniform Building Code*, International Conference of Building Officials (replaced by the International Code Council), Whittier, California.

ICRP Publication 71, 1995, "Age Dependent Doses to Members of the Public from Intake of Radionuclides: Part 4 Inhalation Dose Coefficients," *Annals of the International Commission on Radiological Protection* 25(3-4), Elsevier Science, Tarrytown, New York.

IDF-00001, *Integrated Disposal Facility Final Hazard Categorization*, CH2M HILL Plateau Remediation Company, Richland, Washington.

IDF-PRO-EN-54165, *IDF Unreviewed Disposal Question (UDQ)*, CH2M HILL Plateau Remediation Company, Richland, Washington.

RCW 70.105, "Hazardous Waste Management," *Revised Code of Washington*, Olympia, Washington. Available at: http://apps.leg.wa.gov/RCW/default.aspx?cite=70.105.

70.105.050, "Disposal at Other than Approved Site Prohibited—Disposal of Radioactive Wastes."

Resource Conservation and Recovery Act of 1976, Pub. L. 94-580, 42 USC 6901 et seq. Available at: https://www.govinfo.gov/content/pkg/STATUTE-90/pdf/STATUTE-90-Pg2795.pdf.

RPP-18486, 2006, *Integrated Disposal Facility (IDF), Phase I Critical Systems Design Report*, Rev. 1, CH2M HILL Hanford Group, Inc., Richland, Washington.

RPP-RPT-59958, 2018, *Performance Assessment for the Integrated Disposal Facility, Hanford Site, Washington*, Rev. 1, Washington River Protection Solutions, LLC, Richland, Washington.

SW-846, 2015, *Test Methods for Evaluating Solid Waste: Physical/Chemical Methods, Third Edition; Final Update V*, Office of Solid Waste and Emergency Response, U.S. Environmental Protection Agency, Washington, D.C. Compendium methods available at: https://www.epa.gov/hw-sw846/sw-846-compendium.

Toxic Substances Control Act of 1976, Pub. L. 94-469, as amended, 15 USC 2601 et seq. Available at: https://www.gpo.gov/fdsys/pkg/STATUTE-90/pdf/STATUTE-90-Pg2003.pdf.

WA7890008967, 2017, *Hanford Facility Resource Conservation and Recovery Act Permit, Dangerous Waste Portion, Revision 8C, For the Treatment, Storage, and Disposal of Dangerous Waste*, as amended, Washington State Department of Ecology, Richland, Washington. Available at:
https://pdw.hanford.gov/arpir/index.cfm/viewDoc?accession=0069140H.
https://pdw.hanford.gov/arpir/index.cfm/viewDoc?accession=0069139H.
https://pdw.hanford.gov/arpir/index.cfm/viewDoc?accession=0069138H.

WAC 173-303, "Dangerous Waste Regulations," *Washington Administrative Code*, Olympia, Washington. Available at: http://apps.leg.wa.gov/WAC/default.aspx?cite=173-303.

173-303-040, "Definitions."

173-303-070, "Designation of Dangerous Waste."

173-303-080, "Dangerous Waste Lists."

173-303-082, "Dangerous Waste Sources."

173-303-090, "Dangerous Waste Characteristics."

173-303-100, "Dangerous Waste Criteria."

173-303-110, "Sampling, Testing Methods and Analytes."

173-303-140, “Land Disposal Restrictions.”

173-303-161, “Overpacked Containers (Labpacks).”

173-303-300, “General Waste Analysis.”

173-303-380, “Facility Recordkeeping.”

173-303-400, “Interim Status Facility Standards.”

173-303-600, “Final Facility Standards.”

173-303-630, “Use and Management of Containers.”

173-303-665, “Landfills.”

This page intentionally left blank.

APPENDIX A

DOE-STD-5002-2017, CHAPTER 6 – WASTE ACCEPTANCE CRITERIA CROSSWALK

This page intentionally left blank.

APPENDIX A
DOE-STD-5002-2017, CHAPTER 6 – WASTE ACCEPTANCE CRITERIA CROSSWALK

This appendix provides a crosswalk to document compliance with the Waste Acceptance Criteria Review Criteria in Table 6-2 in DOE-STD-5002-2017, *DOE Standard Disposal Authorization Statement and Tank Closure Documentation*.

ID	Table 6-2 from DOE-STD-5002-2017	Comments
W-1	Provide a brief background discussion of the disposal facility for which the WAC apply, and the technical basis upon which the criteria are based. (6.2.1 Introduction)	Sections 1.0, 1.1, and 1.2
W-2	Identify the radioactivity, concentration and inventory limits, waste classes or categories that may be managed at the facility. Identify any acceptable limits for a waste package's external surface dose rate for contact and remote-handled packages, acceptable contamination levels, and heat generation. (6.2.2 Radiological Limits)	Sections 3.1.1.3, 3.2*, and 4.9; Appendices F and G
W-3	Define radiological limits for the disposal facilities based on the PA. In addition, other source documents such as the DSA, EPA, RCRA, or DOT limits should be included as part of the basis for radiological limits. Use the most restrictive limit in the WAC when other source documents limits overlap the PA limits. Any limitations on non-radiological content should also be specified. (6.2.2.1 Inventory Concentration Limits Summary)	Sections 3.2.4* and 3.3*
W-4	Identify the radionuclide, waste form, material or containers prohibited from acceptance at the receiving facility, including the basis for any prohibition. (6.2.2.2 Prohibited Radionuclides Summary)	Section 3.1.2
W-5	Identify the following:	
	• Acceptable waste forms. The PA should be used as one of the bases for acceptable waste forms	Section 3.2.4.1
	• Restrictions or prohibitions of waste, materials, or containers that may adversely affect waste handlers or compromise facility or waste container performance	Section 3.1.2
	• Requirements associated with acceptance of MLLW and classified waste/material containers, if the facility accepts these wastes	Sections 3.3 and 4.9
	• Requirements for waste streams needing special attention for receipt, handling, storage treatment, or disposal (e.g., sealed sources), including any additional restrictions or limitations on the waste or specifications for handling the waste containers	Section 3.2.4.1 and Appendix G
	• Site-specific classification or categorization system(s) that require waste stabilization, or additional management steps, for wastes containing certain concentrations of specific radionuclides	Section 4.5
	• Requirements associated with acceptance of bulk waste, including any additional restricted materials or limitations on materials; any specific technical requirements the bulk waste should meet for compatibility with treatment, storage, or disposal operations; and the conditions or specifications for handling bulk waste containers that will be returned	Section 3.1.2 and Appendix E
	• Acceptable limits for free liquid content on a per-package basis. (6.2.3 Waste Form Criteria)	

ID	Table 6-2 from DOE-STD-5002-2017	Comments
W-6	This section should:	
	• Specify acceptable combinations of waste forms, containers, and packages providing structural stability or inadvertent intrusion protection throughout the life cycle of the waste. The PA should be used as one of the bases for acceptable package criteria; and	Section 4.0* and Appendix H
	• Establish acceptable facility package and conveyance system contamination levels.	Section 4.9
	(6.2.4 Waste Package Criteria)	
W-7	Identify applicable package labeling and marking requirements including any necessary information about bar coding or other tracking systems used at the facility receiving the waste and the application of the system by generators and operators identifying final disposal location at the disposal facility. (6.2.4.1 Package Tracking)	Section 4.5 and Appendix I
W-8	Specify waste packages and closures designed to ensure that the package will withstand the effects of changing temperatures, weather, pressures, and/or vibrations under normal handling and shipping conditions and not breach or lose the package contents. Identify acceptable void space limits consistent with requirements associated with potential subsidence at the disposal facility. (6.2.4.2 Package Durability and Stability)	Sections 4.1 and 4.2; Appendix E
W-9	Identify the guidance for bulk non-containerized waste. (6.2.4.3 Bulk Waste Packaging)	Section 4.6
W-10	This section should:	
	• Identify the waste transfer requirements (generator facility to the treatment, storage, or disposal facility) and documentation/record requirements	Section 2.5
	• Specify acceptable transportation routes to minimize radiological/chemical risk. Information on accident rates, time in transit, population density, construction activities, and time of day should be considered when determining radiological risk	N/A (onsite transport only)
	• Specify if necessary shipping arrangements, including any electronic traffic data bases or scheduling systems being used	N/A (onsite transport only)
	• Identify any package protection requirements to provide physical protection to the packages to prevent breaching or ensure wastes certification status is preserved	Section 4.2
	• Identify any specific DOE Order (e.g., DOE O 460.1C, O 460.2A, and O 461.1B & O 461.2) and/or DOT requirements	Section 2.5
	(6.2.5 Waste Transfer and Transportation Requirements)	
W-11	This section should:	
	• Identify the waste evaluation requirements for the receiving facility, including confirmation that both technical and administrative requirements of the WAC have been met	Section 2.0*
	• Specify the process to be followed for the disposition of non-conforming wastes	Section 2.6
	• Specify the process for evaluating proposed and discovered changes to the WAC for compliance with requirements in the approved RWMB(s)	Section 1.4
	(6.2.6 Evaluation and Acceptance)	

ID	Table 6-2 from DOE-STD-5002-2017	Comments
W-12	Specify the process for WAC deviations and include: • The nature of the WAC deviation • The rationale for the deviation • Demonstration that the deviation does not violate the DAS, supporting technical basis documentation (i.e., PA/CA), DSA, or requirements as applicable from EPA, NRC, DOT, state, and federal programs (6.2.6.1 WAC Deviations)	Section 1.4
W-13	Identify the documentation/quality records, including waste characterization data and supporting information that should be provided by the waste generator. (6.2.7 Waste Documentation and Records Management)	Sections 2.1.4 and 3.3.1
W-14	Include a complete list of citations for materials referenced in the WAC. (6.2.8 References)	Section 6.0
W-15	Include appendices to the WAC as necessary to provide technical details supporting the data and analyses. (6.2.9 Appendices)	Appendices B through I

*Includes subsections.

CA	=	composite analyses	N/A	=	not applicable
DAS	=	Disposal Authorization Statement	NRC	=	U.S. Nuclear Regulatory Commission
DOE	=	U.S. Department of Energy	PA	=	performance assessment
DOT	=	U.S. Department of Transportation	RCRA	=	*Resource Conservation and Recovery Act of 1976*
DSA	=	documented safety analysis	RWMB	=	radioactive waste management basis
EPA	=	U.S. Environmental Protection Agency	WAC	=	waste acceptance criteria
MLLW	=	mixed low-level waste			

REFERENCES

DOE-STD-5002-2017, 2017, *Disposal Authorization Statement and Tank Closure Documentation*, U.S. Department of Energy, Washington, D.C. Available at: https://www.standards.doe.gov/standards-documents/5000/5002-astd-2017.

Resource Conservation and Recovery Act of 1976, Pub. L. 94-580, 42 USC 6901 et seq. Available at: https://www.govinfo.gov/content/pkg/STATUTE-90/pdf/STATUTE-90-Pg2795.pdf.

This page intentionally left blank.

APPENDIX B

GUIDANCE FOR MASS BALANCE OF HAZARDOUS/MIXED WASTE

This page intentionally left blank.

APPENDIX B
GUIDANCE FOR MASS BALANCE OF HAZARDOUS/MIXED WASTE

Use the following guidance when documenting the mixed waste characterization.

1. References should clearly identify the constituent material by chemical composition or unique generic material description (e.g., polyethylene plastic, Buna-N rubber, or cuprous oxide). Minimize the use of acronyms and product nicknames not commonly known.

2. Do NOT use the waste package or container weight and volume in the weight-averaging calculations. Include materials added to the waste for the purpose of liquid absorption or padding, such as paper/cloth pads in the characterization of the waste.

3. Ensure previous characterizations performed on the same waste are complete and accurate based on current characterization criteria. If unsure perform a current characterization of the waste.

4. Toxicity characteristics: Weight averaging is acceptable when evaluating a complex waste component that is not easily separated into individual components. In order to determine if a complex waste component could contain sufficient toxic metals to fail the Toxicity Characteristic Leaching procedure (TCLP) test, consider the total component weight (not the individual component) when making the hazardous waste determination. For example, when waste components are painted or plated with a lead, chromium or cadmium containing product, the entire waste component weight is used for calculations not the weight of the paint or plating only. Consider the paint or plating as part of the waste component. Complex components will be disassembled to the extent technically practicable consistent with radiation and chemical exposure limits to personnel. Intentional dilution of hazardous/dangerous waste is prohibited by regulations.

   4.1. Use either of the following methods to determine if the toxicity of suspect toxic wastes for which TCLP samples cannot be taken:

   - Compare the total weight percent of each TCLP regulated constituent to the TCLP maximum weight percent as given in Table B-1, or
   - Compare the concentration of each TCLP regulated constituent in the waste to 20 times the TCLP regulatory level as listed in Table B-1.

   4.2. Use the most conservative estimate if laboratory data or literature information is limited. For example, use the highest chromium value available from literature or test data for a type of paint of unknown chromium concentration.

   4.3. Use the TCLP leachability proportioning to demonstrate a waste characterization when to total weight percent or concentration of the TCLP regulated constituent is nearly equal to the regulatory limit. The method applies the proportion of the suspected TCLP leachability of the individual parts of a complex component to the entire component.

   - For example: Consider a complex component that consists of two materials: component "A" leached cadmium at 5.0 mg/l in a TCLP test, and component "A" comprises 10% by weight of the complex component. No cadmium is present in component "B." The proportioned TCLP leachability of the entire component is the following:

$$(5.0 \text{ mg/l Cd} \times 10\%) + (0.0 \text{ mg/l Cd} \times 90\%) = 0.5 \text{ mg/ppm Cd}$$

   Therefore, the complex component is below the regulatory limit of 1.0 mg/l Cd.

4.4. For materials estimated to contain TCLP regulated constituents in quantities approaching the TCLP limits, justify the estimated TCLP values used in the waste designation. Include any supporting documentation for the estimated TCLP value.

4.5. Table B-1 provides leachability data from some common metals and alloys.

Table B-1. TCLP Test Results for Leachability Factors

Metal/Alloy	Material Composition	TCLP Result (mg/L)	TCLP Limit (mg/L)	Pass/Fail
Silver-braze alloy	Ag @ 34%	Ag <1.0	Ag @ 5.0	Pass
	Cd @ 17%	Cd = 2.7	Cd @ 1.0	Fail
Cadmium plating	Cd (chromated)	Cd = 362	Cd @ 1.0	Fail
		Cr = 0.2	Cr @ 5.0	Pass
Leaded brass/Bronze	Pb @ 22.2%	Pb = 251	Pb @ 5.0	Fail
	Pb @ 1.4%	Pb = 25.5	Pb @ 5.0	Fail
	Pb @ 1.02%	Pb = 2.6	Pb @ 5.0	Pass
Chromium plating	Cr @ 100%	Cr = 0.8	Cr @ 5.0	Pass
Zinc galvanize (electrodeposited)	Zn (chromated)	Cr = 0.3	Cr @ 5.0	Pass
Zinc galvanize (hot dipped)	Zn with lead	Pb <0.1	Pb @ 5.0	Pass
Silver plating	Ag @ 100%	Ag = 2.4	Ag @ 5.0	Pass
Zinc anode	Zn with trace Pb & Cd	Cd = 0.46	Cd @ 1.0	Pass
		Pb = 0.003	Pb @ 5.0	Pass
Leaded steel	Pb @ 0.2%	Pb <0.1	Pb @ 5.0	Pass
430 Stainless steel	Cr @ 16.5 %	Cr = 0.3	Cr @ 5.0	Pass
410 Stainless steel	Cr @ 12.5 %	Cr = 2.2	Cr @ 5.0	Pass

APPENDIX C

APPROVED VENTS FOR WASTE CONTAINERS

This page intentionally left blank.

APPENDIX C
APPROVED VENTS FOR WASTE CONTAINERS

Containers requiring a vent shall have a vent installed. Table C-1 provides a list of the approved vents.

Table C-1. Approved Vents

Manufacturer	Model Number	
Fairey®		
99421		
Nuclear Filter Technology		
NucFil®-007	NucFil-019	NucFil-073
NucFil-007LS	NucFil-019 DS	NucFil-075
NucFil-007LW	NucFil-019-EPD	NucFil-08DS
NucFil-007S	NucFil-019-EPDDS	NucFil-307DS
NucFil-007W	NucFil-019S DS	NucFil-347DS
NucFil-007WS	NucFil-020	NucFil-357DS
NucFil-012	NucFil-020DS	NucFil-357S
NucFil-013	NucFil-020S	NucFil-407DS
NucFil-013 GorTex	NucFil-049	NucFil-7DS
NucFil-013 SS	NucFil-049S	NucFil-DVS3
NucFil-015 D S	NucFil-051	NucFil-DVS3A
NucFil-016	NucFil-072	NucFil-DVS307
NucFil-016LPDS	NucFil-072S	NucFil-NFS7A
NucFil-016 SS HP		
UltraTech		
9400	9416T	9500
9402	9423	9550
9408	9423T	9810
9412	9424	9812
9412L	9424X	9815
9412LX	9450	9817
9416	9460	

®Fairey is a registered trademark of the Fairey Holdings Limited Company, Middlesex, England.

®NucFil is a registered trademark of the Nuclear Filter Technology Corporation, Lakewood, Colorado.

This page intentionally left blank.

APPENDIX D

CHEMICAL CONSTITUENTS/LINER SYSTEM COMPATIBILITY

This page intentionally left blank.

APPENDIX D
CHEMICAL CONSTITUENTS/LINER SYSTEM COMPATIBILITY

Direct disposal of liquid wastes is prohibited at the Integrated Disposal Facility. Liquids are either solidified or absorbed before disposal; thus, direct contact of liquid wastes with the liner cannot occur. Solidification/absorption will inhibit dissolution of any organics into the leachate. Dust suppression water and rain/snowmelt are the primary sources for liquid ultimately reaching the liner/sump system. Pumps are used to automatically remove the accumulated leachate, minimizing the long-term contact with the high-density polyethylene liners. Based on a nominal cell leachate generation of only 100,000 gal/yr (the 2018 cell actual generation rate was approximately 450,000 gal/yr), approximately 23 kg (50 lb) of any specific organic released over the year in a given cell would not exceed 50 ppm concentration in the leachate. Constituent evaluations for potential liner impacts are only necessary prior to approving a waste profile that proposes disposal of bulk (i.e., >23 kg [>50 lb]) quantities of organic chemicals unless the waste profile indicates that organic concentrations will not exceed 50 ppm in the as-disposed material.

This page intentionally left blank.

APPENDIX E

VOID FILLERS, SORBENTS, AND STABILIZING MATERIALS

This page intentionally left blank.

APPENDIX E
VOID FILLERS, SORBENTS, AND STABILIZING MATERIALS

E1.0 INTRODUCTION

Sorbents and stabilizing materials can be used to meet free-liquid requirements, void fill requirements, or to provide a safer waste form for handling and storage. Sorbents and stabilizing materials must be nonhazardous, compatible with the waste being absorbed or stabilized, and nonbiodegradable as defined in WAC 173-303-140(4)(b), "Dangerous Waste Regulations," incorporated by reference at WAC 173-303-665(13), Table E-1 lists the general types of sorbents and stabilizing materials that can be used for major Hanford Site waste streams. Specific products used must meet the definitions that have been listed on an approved Waste Profile Sheet.

Table E-1. Sorbent Selection Based on Waste Type

Waste Type	Subgroup	Allowable Sorbents/ Stabilizing Materials
Low-level waste	Low-level liquids for disposal	• Mineral sorbents • Polymer sorbents • Stabilizing materials
	Low-level organic liquids and chelating agents for disposal	Stabilizing materials
Mixed waste	All types (note – sorbent for lab packs is placed around containers, not mixed with liquids)	• Mineral sorbents • Polymer sorbents

Use of these materials to meet radiological stabilization or *Resource Conservation and Recovery Act of 1976* land disposal restrictions treatment standards is not addressed in this appendix. A more specific evaluation must be performed as specified elsewhere in this document to demonstrate radiological stabilization or land disposal restrictions compliance.

E2.0 GENERAL TYPES OF SORBENTS AND STABILIZING MATERIALS POTENTIALLY ALLOWED

The following general types of sorbents and stabilizing materials are potentially allowed:

- Inorganic mineral sorbents including aluminosilicates, clays, vermiculite, zeolites, lime, silica sand, diatomaceous earth, perlite, fly ash and other inorganic materials used for absorption.
- High molecular weight synthetic polymers (polymer sorbents) including polyethylene, high-density polyethylene, polypropylene, polyacrylate, and other synthetic polymers. This excludes polymers derived from biological material (e.g., cellulose-based materials), and polymers specifically designed to be degradable.
- Stabilizing materials including concrete, portland cement, lime/pozzolans, and a variety of other inorganic materials.

  Note: Selection of specific materials must be in accordance with Section E3.0.

Specialty stabilization agents for organic liquids include certain products that stabilize organic liquids. These products chemically react with organic liquids to prevent their release in the disposal environment.

E3.0 SELECTION AND USE OF SORBENTS AND STABILIZING MATERIALS

Selection and use of a specific product for absorption of a given waste must address the following:

- Determine from Table E-1 what general classes of materials can be used and the conditions for use.
- Use allowable types of sorbents for various waste streams that are based on the anticipated treatment/disposal methods.
- Select a product that is appropriate for the material to be treated. Waste generators can request approval of products in the waste stream profile sheet by providing data to support the intended use. Approval of the profile constitutes approval of the product.
- Obtain manufacturer's instructions and limitations for use of the product. It is critical to use sorbents and stabilizing materials in accordance with the manufacturer's instructions. The following information is required:
  - Compatibility of the sorbent or stabilizing material with the waste
  - Recommended ratio of sorbent to waste for the liquid being absorbed
  - For stabilizing materials, the exact ratio of liquid-to-stabilizing materials and methods of mixing.

It might be necessary to run a test of the waste or a surrogate to ensure that the product works adequately with the waste requiring sorption or stabilization.

E4.0 HANFORD SITE REQUIREMENTS FOR USE OF SORBENTS

Sorbents must be used in sufficient quantity. Based on data from the manufacturer or testing, the minimum ratio of sorbent to liquid is determined. For Hanford Site applications, a minimum of twice the minimum amount of sorbent shall be used.

E5.0 REFERENCES

Resource Conservation and Recovery Act of 1976, Pub. L. 94-580, 42 USC 6901 et seq. Available at: https://www.govinfo.gov/content/pkg/STATUTE-90/pdf/STATUTE-90-Pg2795.pdf.

WAC 173-303, "Dangerous Waste Regulations," *Washington Administrative Code*, Olympia, Washington. Available at: https://apps.leg.wa.gov/WAC/default.aspx?cite=173-303.

173-303-140, "Land Disposal Restrictions."

173-303-665, "Landfills."

APPENDIX F

RADIOLOGICAL CALCULATION METHODS

This page intentionally left blank.

APPENDIX F
RADIOLOGICAL CALCULATION METHODS

F1.0 INTRODUCTION

A variety of radiological calculations are required to determine whether a waste can be managed at the Integrated Disposal Facility (IDF). The following sections describe the methodology for performing these calculations. For each calculation, the following assumptions shall be used:

- Major radionuclides in the waste must be considered in the calculations. If there is a major radionuclide in the waste that is not listed in Table F-1, the waste generator must notify IDF waste acceptance team to calculate the applicable limits and conversion factors.
- If a daughter radionuclide has a half-life <10 days and the parent radionuclide has a half-life greater than the daughter, the activity of the daughter should not be considered in the calculations.
- The volume of the outer waste container shall be used when limits are expressed in volume concentration. For example, a waste generator packaging a 1 L (0.26 gal) jar inside of a 208 L (55 gal) drum (0.208 m^3 [7 ft^3]) would use the 0.208 m^3 (7 ft^3) volume for radiological calculation purposes. An additional example is a concrete lined 208 L (55 gal) drum (0.208 m^3 [7 ft^3]) having a 0.15 m^3 (5.3 ft^3) waste capacity. The waste generator would again use 0.208 m^3 (7 ft^3) for the radiological calculation volume. If the waste is not containerized, the volume is the anticipated volume that the waste will occupy in the IDF.

F2.0 TRANSURANIC WASTE DETERMINATION

To determine whether a waste is transuranic, compute the sum of the specific activity of the alpha-emitting radionuclides having half-lives greater than 20 years. If the total alpha activity exceeds 100 nCi/g (3,700 Bq/g), the waste is transuranic (DOE M 435.1-1, *Radioactive Waste Management Manual*). For the mass of the waste matrix used in the transuranic determination, the following direction will be used:

- The mass of added shielding, the container, and any rigid liners is excluded.
- The mass of stabilization media and similar materials added to meet waste acceptance criteria is used in accordance with Chapter III.A in DOE G 435.1-1, *Implementation Guide for Use with DOE Manual 435.1-1*.

F3.0 CALCULATION OF PLUTONIUM-239 FISSILE GRAM EQUIVALENTS

Fissile gram equivalent (FGE) is defined as the amount of plutonium-239 (in g) that will produce the equivalent reactivity as another isotope at optimal shape, moderation, and reflection. FGE normally is calculated using the following steps:

1. Multiply the grams of each fissionable isotope by the FGE conversion factor (FGE/g) to yield the FGE for the isotope:

   Isotope mass (g) × isotope conversion factor (FGE/g) = Isotope FGE.

2. Sum the FGE for each fissionable isotope to a total FGE for all isotopes.

If there is more than 1 g (0.04 oz) of uranium-235, the IDF criticality safety representative could use an alternate method for determining the FGE for uranium-235 in specific cases. Natural uranium (i.e., 0.72% uranium-235) and depleted uranium (i.e., <0.72%) are normally exempt for criticality purposes at IDF.

F4.0 CALCULATION OF THERMAL POWER

The thermal power of the waste in a container is calculated from the concentration of radionuclides in the waste and the heat of decay from Table F-1. The thermal power calculation is performed using the following steps:

1. The concentration of each isotope is multiplied by the heat of decay for that isotope from the value in Table F-1, yielding the thermal power for each isotope:

   Isotope concentration (Ci/m^3) × decay heat (W/Ci) = decay heat/thermal power (W/m^3).

2. Thermal power is the sum of the thermal power of all isotopes in the waste.

F5.0 CALCULATING DOSE-EQUIVALENT CURIES

Calculation of dose-equivalent curies (DE-Ci) is a method of normalizing the exposure risk of various isotopes. Calculation of the DE-Ci of a waste container is performed using the following steps:

1. Multiply the activity (in curies) of each isotope in a given container by its respective ICRP 71, "Age Dependent Doses to Members of the Public from Intake of Radionuclides: Part 4 Inhalation Dose Coefficients," correction factor from Table F-1.

2. The total DE-Ci of the waste package is the sum of the DE-Ci values for all isotopes in the waste.

Table F-1. Conversion Factors for General Radiological Calculations

Isotope	Half-Life (second)	Specific Activity [a] (Ci/g)	Decay Heat [b,c] (W/Ci)	ICRP 71 DE-Ci Correction Factor [b,d]
H-3	3.891 E+08	9.613 E+03	3.383 E-05	5.20 E-06
Be-7	4.605 E+06	3.491 E+05	1.996 E-03	1.00 E-06
Be-10	5.049 E+13	2.231 E-02	1.495 E-03	1.92 E-04
C-14	1.808 E+11	4.455 E+00	2.933 E-04	1.16 E-04
Na-22	8.214 E+07	6.244 E+03	1.420 E-02	2.60 E-05
P-32	1.232 E+06	2.864 E+05	4.119 E-03	1.54 E-05
Si-32	5.428 E+09	6.500 E+01	4.079 E-04	2.20 E-03
P-33	2.195 E+06	1.559 E+05	4.539 E-04	1.84 E-06
S-35	7.560 E+06	4.267 E+04	2.895 E-04	2.80 E-05
Cl-36	9.530 E+12	3.291 E-02	1.622 E-03	1.46 E-04
Ar-39	8.489 E+09	3.411 E+01	1.296 E-03	0.00 E+00
K-40	4.039 E+16	6.989 E-06	4.025 E-03	4.20 E-05

Table F-1. Conversion Factors for General Radiological Calculations

Isotope	Half-Life (second)	Specific Activity [a] (Ci/g)	Decay Heat [b,c] (W/Ci)	ICRP 71 DE-Ci Correction Factor [b,d]
Ca-41	3.249 E+12	8.500 E-02	1.408 E-02	1.90 E-06
Ar-42	1.041 E+09	2.582 E+02	1.381 E-03	0.00 E+00
Ti-44[a]	1.490 E+09	1.722 E+02	1.708 E-02	1.22 E-03
Ca-45	1.406 E+07	1.785 E+04	4.577 E-04	5.40 E-05
Sc-46	7.242 E+06	3.390 E+04	1.258 E-02	1.36 E-04
V-49	2.851 E+07	8.084 E+03	2.685 E-05	4.20 E-07
Cr-51	2.394 E+06	9.251 E+04	2.170 E-04	4.00 E-07
Mn-54	2.698 E+07	7.751 E+03	4.981 E-03	1.70 E-05
Fe-55	8.631 E+07	2.379 E+03	3.492 E-05	1.54 E-05
Co-56	6.679 E+06	3.020 E+04	2.200 E-02	9.60 E-05
Co-57	2.348 E+07	8.438 E+03	8.536 E-04	1.10 E-05
Co-58	6.122 E+06	3.181 E+04	5.990 E-03	3.20 E-05
Fe-59	3.845 E+06	4.979 E+04	7.749 E-03	4.40 E-05
Fe-60	4.752 E+13	1.300 E-04	2.900 E-02	5.60 E-03
Ni-59	2.398 E+12	7.982 E-02	4.248 E-05	3.60 E-06
Co-60	1.664 E+08	1.131 E+03	1.542 E-02	2.00 E-04
Ni-63	3.124 E+09	5.738 E+01	1.016 E-04	8.80 E-06
Zn-65	2.110 E+07	8.233 E+03	3.495 E-03	4.00 E-05
Ge-68	2.340 E+07	7.098 E+03	5.264 E-05	1.04 E-05
Se-75	1.034 E+07	1.457 E+04	2.400 E-03	2.00 E-05
Se-79	2.051 E+12	6.969 E-02	6.019 E-04	2.20 E-05
Sr-82	2.208 E+06	6.237 E+04	7.665 E-05	4.20 E-05
Rb-83	7.448 E+06	1.827 E+04	2.934 E-03	1.38 E-05
Rb-84	2.831 E+06	4.749 E+04	6.236 E-03	2.00 E-05
Kr-85	3.383 E+08	3.927 E+02	1.498 E-03	0.00 E+00
Sr-85	5.603 E+06	2.371 E+04	3.128 E-03	7.60 E-06
Rb-86	1.612 E+06	8.145 E+04	4.518 E-03	1.86 E-05
Y-88	9.213 E+06	1.393 E+04	1.603 E-02	8.20 E-05
Sr-89	4.365 E+06	2.907 E+04	3.460 E-03	2.00 E-05
Sr-90 [a]	9.037 E+08	1.388 E+02	6.695 E-03	4.80 E-04
Nb-91	2.146 E+10	5.783 E+00	1.021 E-04	2.20 E-04
Mo-93	9.504 E+10	1.278 E+00	9.834 E-05	2.00 E-05

Table F-1. Conversion Factors for General Radiological Calculations

Isotope	Half-Life (second)	Specific Activity [a] (Ci/g)	Decay Heat [b,c] (W/Ci)	ICRP 71 DE-Ci Correction Factor [b,d]
Nb-93m	5.089 E+08	2.386 E+02	1.834 E-04	1.02 E-05
Zr-93	4.828 E+13	2.515 E-03	1.130 E-04	5.00 E-04
Nb-94	6.307 E+11	1.905 E-01	1.031 E-02	2.20 E-04
Nb-95	3.022 E+06	3.934 E+04	4.795 E-03	3.00 E-05
Zr-95 [a]	5.532 E+06	2.149 E+04	5.047 E-03	5.00 E-05
Tc-99	6.668 E+12	1.711 E-02	5.986 E-04	5.80 E-06
Ru-103 [a]	3.392 E+06	3.232 E+04	3.578 E-03	9.60 E-06
Ru-106 [a]	3.181 E+07	3.349 E+03	9.670 E-03	1.58 E-04
Pd-107	2.050 E+14	5.148 E-04	5.513 E-05	5.00 E-07
Ag-108m [a]	1.319 E+10	7.926 E+00	1.008 E-02	1.22 E-04
Cd-109	3.997 E+07	2.592 E+03	1.237 E-04	1.62 E-04
Ag-110m [a]	2.158 E+07	4.756 E+03	1.687 E-02	1.10 E-04
Cd-113m	4.323 E+08	2.311 E+02	1.086 E-03	2.20 E-03
Sn-113 [a]	9.944 E+06	1.005 E+04	2.498 E-03	1.08 E-05
Sn-119m	2.532 E+07	3.748 E+03	5.313 E-04	5.60 E-06
Sn-121m	1.736 E+09	5.376 E+01	2.396 E-04	1.60 E-05
Te-121	1.450 E+06	6.435 E+04	3.471 E-03	4.80 E-06
Te-123	3.154 E+20	2.911 E-10	1.342 E-05	7.80 E-05
Sb-124	5.205 E+06	1.749 E+04	1.331 E-02	2.60 E-05
I-125	5.135 E+06	1.759 E+04	3.655 E-04	1.02 E-04
Sb-125	8.707 E+07	1.037 E+03	3.150 E-03	2.80 E-05
Te-125m	5.011 E+06	1.802 E+04	8.582 E-04	1.02 E-05
Sb-126	1.071 E+06	8.363 E+04	1.847 E-02	2.00 E-05
Sn-126 [a]	3.156 E+12	2.839 E-02	1.056 E-03	2.20 E-04
Te-127m [a]	9.418 E+06	9.440 E+03	1.870 E-03	3.00 E-05
I-129	4.951 E+14	1.768 E-04	4.633 E-04	7.20 E-04
Te-129m [a]	2.920 E+06	2.997 E+04	4.127 E-03	2.60 E-05
Xe-131m	1.028 E+06	8.382 E+04	9.622 E-04	0.00 E+00
Ba-133	3.337 E+08	2.544 E+02	2.705 E-03	3.00 E-05
Cs-134	6.517 E+07	1.293 E+03	1.018 E-02	1.32 E-04
Cs-135	7.574 E+13	1.104 E-03	3.964 E-04	1.38 E-05
Cs-136	1.137 E+06	7.300 E+04	2.326 E-03	2.40 E-05

Table F-1. Conversion Factors for General Radiological Calculations

Isotope	Half-Life (second)	Specific Activity [a] (Ci/g)	Decay Heat [b,c] (W/Ci)	ICRP 71 DE-Ci Correction Factor [b,d]
Cs-137 [a]	9.521 E+08	8.655 E+01	4.816 E-03	9.20 E-05
Ba-140 [a]	1.101 E+06	7.326 E+04	2.236 E-02	2.00 E-05
Ce-141	2.808 E+06	2.851 E+04	1.467 E-03	6.40 E-05
Ce-144 [a]	2.462 E+07	3.185 E+03	7.996 E-03	7.20 E-04
Nd-147	9.487 E+05	8.094 E+04	2.432 E-03	4.80 E-05
Pm-147	8.278 E+07	9.277 E+02	3.676 E-04	1.00 E-04
Sm-147	3.343 E+18	2.297 E-08	1.361 E-02	1.92 E-01
Eu-150	1.079 E+09	6.977 E+01	9.532 E-03	3.80 E-06
Sm-151	2.840 E+09	2.632 E+01	1.179 E-04	8.00 E-05
Eu-152	4.267 E+08	1.740 E+02	7.667 E-03	8.40 E-04
Gd-152	3.406 E+21	2.180 E-11	1.303 E-02	3.80 E-01
Gd-153	2.091 E+07	3.528 E+03	8.622 E-04	4.20 E-05
Eu-154	2.712 E+08	2.703 E+02	9.009 E-03	1.06 E-03
Eu-155	1.529 E+08	4.762 E+02	7.749 E-04	1.38 E-04
Tm-170	1.111 E+07	5.975 E+03	1.982 E-03	1.40 E-04
Hf-175	6.048 E+06	1.066 E+04	2.422 E-03	1.44 E-05
Hf-181	3.662 E+06	1.703 E+04	4.357 E-03	2.80 E-05
Ta-182	9.910 E+06	6.257 E+03	8.890 E-03	1.52 E-04
W-185	6.489 E+06	9.401 E+03	7.520 E-04	2.40 E-06
Re-187	1.577 E+18	3.827 E-08	3.913 E-06	4.00 E-08
Au-195	1.608 E+07	3.599 E+03	7.629 E-04	1.32 E-06
Hg-203	4.026 E+06	1.381 E+04	1.997 E-03	1.12 E-05
Tl-204	1.196 E+08	4.624 E+02	1.407 E-03	7.80 E-06
Bi-207	1.002 E+09	5.438 E+01	9.829 E-03	1.12 E-04
Pb-210	7.037 E+08	7.634 E+01	2.661 E-04	1.80 E-02
Po-210	1.196 E+07	4.493 E+03	3.206 E-02	1.22 E-02
Ra-226	5.049 E+10	9.885 E-01	2.888 E-02	7.00 E-02
Ac-227	6.871 E+08	7.232 E+01	5.021 E-04	1.10 E+01
Ra-228	1.815 E+08	2.727 E+02	1.391 E-04	5.20 E-02
Th-228	6.037 E+07	8.195 E+02	3.272 E-02	6.40 E-01
Th-229	2.316 E+11	2.127 E-01	3.055 E-02	2.20 E+00
Th-230	2.379 E+12	2.061 E-02	2.822 E-02	8.60 E-01

Table F-1. Conversion Factors for General Radiological Calculations

Isotope	Half-Life (second)	Specific Activity [a] (Ci/g)	Decay Heat [b,c] (W/Ci)	ICRP 71 DE-Ci Correction Factor [b,d]
Pa-231	1.034 E+12	4.723 E-02	3.054 E-02	2.80 E+00
Th-232	4.434 E+17	1.097 E-07	2.426 E-02	9.00 E-01
U-232	2.203 E+09	2.207 E+01	3.210 E-02	7.40 E-01
U-233	5.026 E+12	9.633 E-03	2.912 E-02	1.92 E-01
Th-234	2.082 E+06	2.315 E+04	4.268 E-04	1.32 E-04
U-234	7.754 E+12	6.217 E-03	2.880 E-02	1.88 E-01
U-235	2.221 E+16	2.161 E-06	2.773 E-02	1.70 E-01
Pu-236	9.152 E+07	5.222 E+02	3.478 E-02	4.00 E-01
U-236	7.390 E+14	6.468 E-05	2.712 E-02	1.74 E-01
Np-237	6.753 E+13	7.047 E-04	2.944 E-02	4.60 E-01
Pu-238	2.768 E+09	1.712 E+01	3.315 E-02	9.20 E-01
U-238	1.410 E+17	3.361 E-07	2.532 E-02	1.60 E-01
Pu-239	7.609 E+11	6.202 E-02	3.109 E-02	1.00 E+00
Pu-240	2.071 E+11	2.269 E-01	3.115 E-02	1.00 E+00
Am-241	1.366 E+10	3.427 E+00	3.343 E-02	8.40 E-01
Pu-241	4.544 E+08	1.030 E+02	3.177 E-05	1.80 E-02
Am-242m	4.450 E+09	1.047 E+01	4.288 E-04	7.40 E-01
Cm-242	1.408 E+07	3.311 E+03	3.682 E-02	1.04 E-01
Pu-242	1.179 E+13	3.954 E-03	2.955 E-02	9.60 E-01
Am-243	2.324 E+11	1.997 E-01	3.225 E-02	8.20 E-01
Cm-243	9.467 E+08	4.903 E+01	3.683 E-02	6.20 E-01
Cm-244	5.712 E+08	8.093 E+01	3.499 E-02	5.40 E-01
Pu-244	2.525 E+15	1.831 E-05	2.909 E-02	9.40 E-01
Cm-245	2.682 E+11	1.716 E-01	3.334 E-02	8.40 E-01
Cm-246	1.493 E+11	3.072 E-01	3.282 E-02	8.40 E-01
Bk-247	4.352 E+10	1.049 E+00	3.425 E-02	1.38 E+00
Cm-247	5.049 E+14	9.043 E-05	3.174 E-02	7.80 E-01
Cm-248	1.073 E+13	4.239 E-03	1.244 E-01	3.00 E+00
Cf-249	1.108 E+10	4.089 E+00	3.945 E-02	1.40 E+00
Cf-250	4.128 E+08	1.093 E+02	3.727 E-02	6.80 E-01
Cm-250	2.525 E+11	1.787 E-01	8.263 E-01	1.68 E+01
Cf-251	2.834 E+10	1.586 E+00	3.663 E-02	1.42 E+00

Table F-1. Conversion Factors for General Radiological Calculations

Isotope	Half-Life (second)	Specific Activity [a] (Ci/g)	Decay Heat [b,c] (W/Ci)	ICRP 71 DE-Ci Correction Factor [b,d]
Cf-252	8.347 E+07	5.362 E+02	7.258 E-02	4.00 E-01
Es-254	2.380 E+07	1.865 E+03	5.779 E-02	1.72 E-01

Reference: Table A-1 in HNF-EP-0063, *Hanford Site Solid Waste Acceptance Criteria*.

Note: The conversion factor from seconds to years is 3.155 E+07 s/yr.

a. Firestone et al., 1999, *Table of Isotopes* (Chu et al., 1999, *Lund/LBNL Nuclear Data Search Database*). Specific activity data: DFSNW-ECAL-043, *Calculations for Table A-1 of HNF-EP-0063*.

b. Daughters with half-lives <10 days (8.64×10^5 sec) and with parent radionuclide half-life greater than the daughter are not reportable as separate isotopes. Contributions from nonreportable daughters have been included in the decay heat and dose-equivalence factors.

c. Decay heat: ORIGEN database.

d. ICRP Publication 71, "Age Dependent Doses to Members of the Public from Intake of Radionuclides: Part 4 Inhalation Dose Coefficients." Factor: HNF-14741, *Solid Waste Operations Complex Master Documented Safety Analysis*, as amended.

DE-Ci = dose-equivalent curie

F6.0 REFERENCES

Chu, S.Y.F., L.P. Ekstrom, and R.B. Firestone, 1999, The Lund/LBNL Nuclear Data Search, Version 2.0, Lawrence Berkeley National Laboratory, Berkeley, California. Available at: http://nucleardata.nuclear.lu.se/toi/.

DFSNW-ECAL-043, 2001, *Calculations for Table A-1 of HNF-EP-0063*, Rev. 0, Northwest Operations, Duratek Federal Services, Inc., Richland, Washington.

DOE G 435.1-1, 1999, *Implementation Guide for Use with DOE M 435.1-1*, U.S. Department of Energy, Washington, D.C. Available at: https://www.directives.doe.gov/directives-documents/400-series/0435.1-EGuide-1-Chp01/view.

DOE M 435.1-1 Chg 2, 2011, *Radioactive Waste Management Manual*, U.S. Department of Energy, Washington, D.C. Available at: https://www.directives.doe.gov/directives-documents/400-series/0435.1-DManual-1-chg1.

Firestone, R.B., S.Y.F. Chu, and L.P. Ekstrom, 1999, *Table of Isotopes*, 8th ed., John Wiley & Sons, Inc., New York, New York.

HNF-14741, 2005, *Waste Management Project (WMP) Master Documented Safety Analysis (MDSA) for the Solid Waste Operations Complex (SWOC)*, Rev. 2A, Fluor Hanford, Inc., Richland, Washington.

HNF-EP-0063, 2019, *Hanford Site Solid Waste Acceptance Criteria*, Rev. 18, CH2M HILL Plateau Remediation Company, Richland, Washington.

ICRP Publication 71, 1995, "Age Dependent Doses to Members of the Public from Intake of Radionuclides: Part 4 Inhalation Dose Coefficients," *Annals of the International Commission on Radiological Protection* 25(3-4), Elsevier Science, Tarrytown, New York.

This page intentionally left blank.

APPENDIX G

RADIOLOGICAL ACCEPTANCE LIMITS

This page intentionally left blank.

APPENDIX G
RADIOLOGICAL ACCEPTANCE LIMITS

G.1 RADIONUCLIDE REPORTING

Reportable radionuclides shall be reported on the Waste Profile (WP) and Onsite Waste Transfer Form (OWTF). Activity concentrations reported on the WP are applied at the waste stream level; activity concentrations reported on the OWTF are applied at the waste package level. Radionuclides reported on the OWTF shall be identified on the WP. Determination of activity concentrations reported on the WP and the OWTF shall be documented and available for review. Verification of calculations used to determine the radionuclide concentrations (data results) shall be conducted and documented. Waste packages exceeding the activity concentration upper limit will not be accepted without approval of a revised WP; waste concentrations less than the lower limit will be accepted without prior approval.

Radiological acceptance limits are developed from the concentration limits established to protect human health and the environment due to normal releases and intruder events in UDQ-IDF-2019-002-SA, *Duration of Intruder Protections Necessary for Increased Strontium-90 Concentrations in Vitrified Waste*, Table 1 (supersedes Table 17 of RPP-RPT-59958, *Performance Assessment for the Integrated Disposal Facility, Hanford Site, Washington*).

When one or more requirements or limits were more restrictive than others, the more restrictive acceptance limit was adopted. Radionuclides in the waste shall not exceed the concentrations listed in Table G-1.

G.2 REPORTABLE RADIONUCLIDES

Radionuclides known or reasonably expected to be present in a waste stream ***shall*** be reported as follows:

- The activity concentration of the radionuclides in the final waste form exceeds 1% of the Action Level (Table G-1). These radionuclides require rigorous waste characterization and shall be reported on the OWTF and the waste profile.
- Radionuclides that are alpha-emitting and transuranic with a half-life >20 years that exceed 10 pCi/g shall be reported on the waste profile. Transuranic waste radionuclides with concentrations that exceed 1 nCi/g require rigorous waste characterization methods and shall be reported on the OWTF and the waste profile.
- Activity concentrations in the final waste form that exceed 1% of the total activity concentration shall be reported on the OWTF and the waste profile. The total activity concentration shall include the activity of all radionuclides, except for those that are exempt from the reporting requirements as specified. For these radionuclides and for those present at a level less than the detection limit of industry-accepted characterization methods, process knowledge should be sufficient for characterization.

Table G-1. Radionuclide Concentration Limits

Radionuclide	Limit (Ci/m^3)
^{227}Ac	1,320
^{241}Am	3.67
^{243}Am	1.08
^{14}C	6.15
^{113}Cd^{m}	92,200
^{243}Cm	480
^{244}Cm	771
^{60}Co	1.61E+09
^{137}Cs	83.9
^{152}Eu	65,900
^{154}Eu	1.03E+08
^{155}Eu	1.75E+09
^{3}H	2,780
^{129}I	0.120
^{93}Nb^{m}	8.73E+07
^{59}Ni	18.3
^{63}Ni	43.4
^{237}Np	0.740
^{221}Pa	0.211
^{210}Pb	448
^{238}Pu	17.4
^{239}Pu	2.11
^{240}Pu	2.16
^{241}Pu	107
^{242}Pu	2.21
^{226}Ra	0.228
^{228}Ra	1.87E+11
^{222}Rn	9.51E+05
^{79}Se	1.12
^{151}Sm	2.97E+04
^{126}Sn	0.0945
^{90}Sr	47.6
^{99}Tc	0.906

Table G-1. Radionuclide Concentration Limits

Radionuclide	Limit (Ci/m^3)
^{229}Th	0.419
^{230}Th	0.467
^{232}Th	0.0267
^{232}U	1.19
^{223}U	2.52
^{234}U	5.04
^{235}U	0.967
^{236}U	5.62
^{238}U	4.03
^{93}Zr	462

Concentrations limits from RPP-CALC-61254, *Inadvertent Intruder Dose Calculation Update for the Integrated Disposal Facility Performance Assessment*, Table 6-5 Year 2278 used in UDQ-IDF-2019-002-SA, *Duration of Intruder Protections Necessary for Increased Strontium-90 Concentrations in Vitrified Waste*, (supersedes RPP-RPT-59958, *Performance Assessment for the Integrated Disposal Facility, Hanford Site, Washington*, Table 7-17).

G.3 REFERENCES

RPP-CALC-61254, 2019, *Inadvertent Intruder Dose Calculation Update for the Integrated Disposal Facility Performance Assessment*, Rev. 3, Washington River Protection Solutions, LLC, Richland, Washington.

RPP-RPT-59958, 2018, *Performance Assessment for the Integrated Disposal Facility, Hanford Site, Washington*, Rev. 1, Washington River Protection Solutions, LLC, Richland, Washington.

UDQ-IDF-2019-002-SA, 2019, *Duration of Intruder Protections Necessary for Increased Strontium-90 Concentrations in Vitrified Waste*, Rev. 0, CH2M HILL Plateau Remediation Company, Richland, Washington.

This page intentionally left blank.

APPENDIX H

CONTAINERS, COATINGS, AND LINERS

This page intentionally left blank.

APPENDIX H
CONTAINERS, COATINGS, AND LINERS

H1.0 INTRODUCTION

WAC 173-303-630(4), "Dangerous Waste Regulations," "Use and Management of Containers," requires that containers used for storage of dangerous waste be made of or lined with materials that are compatible with the waste and will not react with the waste, and that the ability of the container to contain the waste is not impaired. Various factors affect the compatibility of a container/liner combination, including the properties of chemical constituents in the waste; the physical form of the waste (e.g., free liquid, absorbed liquid, dry waste); and the anticipated length of storage.

The compatibility of the container/liner and the waste is determined using chemical compatibility charts, manufacturer's compatibility data, and/or other applicable data. Any combination of container(s) and/or liner(s) can be used that is compatible with the waste.

Hanford Site procurement specifications for metal drums (HNF-7403, *Specification for Packaging of Hanford Site Performance-Based Drums*) and boxes (HNF-7656, *Specification for Packaging of Hanford Site Performance-Based Steel Boxes*) identify several options for container coatings, with varying degrees of chemical resistance. WHC-SD-TP-ES-002, *Justification for Packaging Acceptance Criteria*, describes a set of standard packages from the Hanford Site that generally will be compatible with the types of waste generated on the Hanford Site. The Hanford Site specifications are provided for information purposes only. It is not necessary to select packaging according to Hanford Site specifications.

H2.0 REFERENCES

HNF-7403, 2000, *Specification for Packaging of Hanford Site Performance-Based Drums*, Rev. 0, Duratek Federal Services, Inc., Northwest Operations, Richland, Washington.

HNF-7656, 2001, *Specification for Packaging of Hanford Site Performance-Based Steel Boxes*, Rev. 0, Duratek Federal Services, Inc., Northwest Operations, Richland, Washington.

WAC 173-303-630, "Dangerous Waste Regulations," "Use and Management of Containers," *Washington Administrative Code*, Olympia, Washington. Available at: http://apps.leg.wa.gov/WAC/default.aspx?cite=173-303-630.

WHC-SD-TP-ES-002, 1996, *Justification for Packaging Acceptance Criteria*, Rev. 0, Westinghouse Hanford Company, Richland, Washington.

This page intentionally left blank.

APPENDIX I

LABELING OF WASTE CONTAINERS

This page intentionally left blank.

APPENDIX I
LABELING OF WASTE CONTAINERS

I1.0 INTRODUCTION

Containers sent to the Integrated Disposal Facility must be labeled for identification and to communicate information needed for proper waste management. Table I-1 lists the standard labeling required on containerized waste except for immobilized low-activity waste glass containers. The following sections provide general requirements for labels and markings.

Table I-1. Required Labeling for Waste Containers [a]

Label	When Required	Location		
		On Drum	On Box	On ILAW Glass Container
Bar code with container identification number	All containers	Bottom third of drum	Short side of box	Pallet placard holder
Gross weight in kg (kg units must appear on label)	All containers	Same side as bar code	Same side as bar code	Pallet placard holder
Applicable DOT labeling	All containers	As specified in 49 CFR	As specified in 49 CFR	Pallet placard holder
Hazardous waste label	Mixed waste containers	Same side as bar code	Same side as bar code	Pallet placard holder
Hazard label(s) [a]	Mixed waste containers	Same side as bar code	Same side as bar code	Pallet placard holder
PCB label [b]	Waste that is regulated for PCB content under 40 CFR 761	Same side as bar code	Same side as bar code	Pallet placard holder
Asbestos label	As required per 40 CFR 61, Subpart M	Same side as bar code	Same side as bar code	Pallet placard holder

Notes: Complete reference citations are provided in Chapter I7.0.
For packages shipped within a Special Packaging Zone as allowed by DOE/RL-2001-36, the minimum marking and labeling requirements are the bar code with container identification number and gross weight in kilograms.

a. Refer to Table I-2 for Washington State hazard labeling of mixed waste. These labels might conflict with DOT hazard labeling and should be covered, removed, or obliterated during transportation. ILAW glass containers will be labelled using the ILAW pallet sign holder, as labels will not be placed directly in the ILAW glass container from the high heat of the cooling glass.

b. Label in accordance with 40 CFR 761.40 and 40 CFR 761.45. The label placed on containers holding PCB items must include the date the item was removed from service.

DOT = U.S. Department of Transportation
ILAW = immobilized low-activity waste
PCB = polychlorinated biphenyl

Table I-2. Selection of Washington State Hazard Labeling

Hazard or Risk	Acceptable Labels and Markings
Dangerous Waste Characteristic – D001 Ignitable (WAC 173-303-090(5))	IGNITABLE
Dangerous Waste Characteristic – D002 Corrosive (WAC 173-303-090(6))	CORROSIVE
Dangerous Waste Characteristic – D003 Reactivity (WAC 173-303-090(7))	REACTIVE
Dangerous Waste Characteristic – D004 - D043 Toxic (WAC 173-303-090(8))	TOXIC
WA State Dangerous Waste Criteria – WT01, WT02 Toxic (WAC 171-303-100)	TOXIC
WA State Dangerous Waste Criteria – WP01, WP02, WP03 Persistent (WAC 171-303-100)	TOXIC
Discarded Chemical Products – (U, P codes) (WAC 173-303-9903)	a. If a listed dangerous waste no longer exhibits a characteristic hazard, then label TOXIC. b. Otherwise, label with appropriate IGNITABLE, CORROSIVE, REACTIVE, OR TOXIC labels.
Dangerous Waste Sources – (F, codes) (WAC 173-303-9904)	a. If a listed dangerous waste no longer exhibits a characteristic hazard, then label TOXIC. b. Otherwise, label with appropriate IGNITABLE, CORROSIVE, REACTIVE, OR TOXIC labels.

References: WAC 173-303, "Dangerous Waste Regulations."
173-303-090, "Dangerous Waste Characteristics."
173-303-100, "Dangerous Waste Criteria."
173-303-9903, "Discarded Chemical Products List."
173-303-9904, "Dangerous Sources List."

I2.0 BAR CODE

Each container shall be labeled with a bar code showing the unique container identification number (CIN). Bar-coded CINs will be assigned as follows:

- For containers purchased through the Hanford Site procurement system, the bar code will be attached to the containers when the containers are received at the Central Stores warehouse. The CIN is a unique seven-digit number.
- For containers not purchased through the Hanford Site procurement system, Hanford Site generators will assign a CIN. The CIN must be a unique number. The suggested format to ensure that the CIN is unique is: "Facility ID-Year-Sequential #," where the Facility ID is the generating facility's unique

four-character (letter and/or number) identifier, "Year" is the last two digits of the year the CIN was assigned, and "Sequential #" is the generator's sequential numbering of containers for that year.

I3.0 DURABILITY

Labels and markings must be durable, fade-resistant, water-resistant paints, vinyl stickers, or another system that is sufficiently durable to remain intact and legible during management of the waste before disposal.

I4.0 PLACEMENT OF LABELS

Labels and markings shall be positioned so that required information is visible on the same side of the container as the bar code. If drums are palletized, the drums must be oriented on the pallet such that a complete set of labels is visible.

I5.0 SIZE OF LABELS

Standard labels defined by regulations (e.g., U.S. Department of Transportation label, hazardous waste label, polychlorinated biphenyl label, and asbestos label) must be legible or as specified by the regulations. Characters on Washington State hazard labels must be legible from a distance of 25 ft or the lettering size is a minimum of 1.27 cm (0.5 in.) in size. Characters on other labels (e.g., gross weight) must be a minimum of 2.54 cm (1 in.) high or as specified by the regulations.

I6.0 LABELING INNER CONTAINERS IN LAB PACKS

Each inner container in a lab pack must be labeled with an identification number or waste name cross-referenced against the contents inventory sheet. These labels must be sufficiently durable to remain legible for 20 years. Hazard labeling requirements are listed in Table I-2.

I7.0 REFERENCES

40 CFR 61, "National Emission Standards for Hazardous Air Pollutants," *Code of Federal Regulations*. Available at: https://www.govinfo.gov/content/pkg/CFR-2010-title40-vol8/pdf/CFR-2010-title40-vol8-part61.pdf.

Subpart M, "National Emissions Standard for Asbestos." (61.140–61.157)

40 CFR 761, "Polychlorinated Biphenyls (PCBs) Manufacturing, Processing, Distribution in Commerce, and Use Prohibitions," *Code of Federal Regulations*. Available at: https://www.govinfo.gov/content/pkg/CFR-2018-title40-vol34/pdf/CFR-2018-title40-vol34-part761.pdf.

761.40, "Marking Requirements."

761.45, "Marking Formats."

49 CFR, "Transportation," *Code of Federal Regulations*. Available at:
https://www.govinfo.gov/content/pkg/CFR-2009-title49-vol1/xml/CFR-2009-title49-vol1.xml.
https://www.govinfo.gov/content/pkg/CFR-2009-title49-vol2/xml/CFR-2009-title49-vol2.xml.
https://www.govinfo.gov/content/pkg/CFR-2009-title49-vol3/xml/CFR-2009-title49-vol3.xml.
https://www.govinfo.gov/content/pkg/CFR-2009-title49-vol4/xml/CFR-2009-title49-vol4.xml.
https://www.govinfo.gov/content/pkg/CFR-2009-title49-vol5/xml/CFR-2009-title49-vol5.xml.
https://www.govinfo.gov/content/pkg/CFR-2009-title49-vol6/xml/CFR-2009-title49-vol6.xml.
https://www.govinfo.gov/content/pkg/CFR-2009-title49-vol7/xml/CFR-2009-title49-vol7.xml.
https://www.govinfo.gov/content/pkg/CFR-2010-title49-vol8/xml/CFR-2010-title49-vol8.xml.
https://www.govinfo.gov/content/pkg/CFR-2010-title49-vol9/xml/CFR-2010-title49-vol9.xml.

DOE/RL-2001-36, 2017, *Hanford Sitewide Transportation Safety Document*, Rev. 1-E, U.S. Department of Energy, Richland Operations Office, Richland, Washington.

WAC 173-303, "Dangerous Waste Regulations," *Washington Administrative Code*, Olympia, Washington. Available at: https://apps.leg.wa.gov/WAC/default.aspx?cite=173-303.

303-090, "Dangerous Waste Characteristics."

303-100, "Dangerous Waste Criteria."

303-9903, "Discarded Chemical Products List."

303-9904, "Dangerous Sources List."

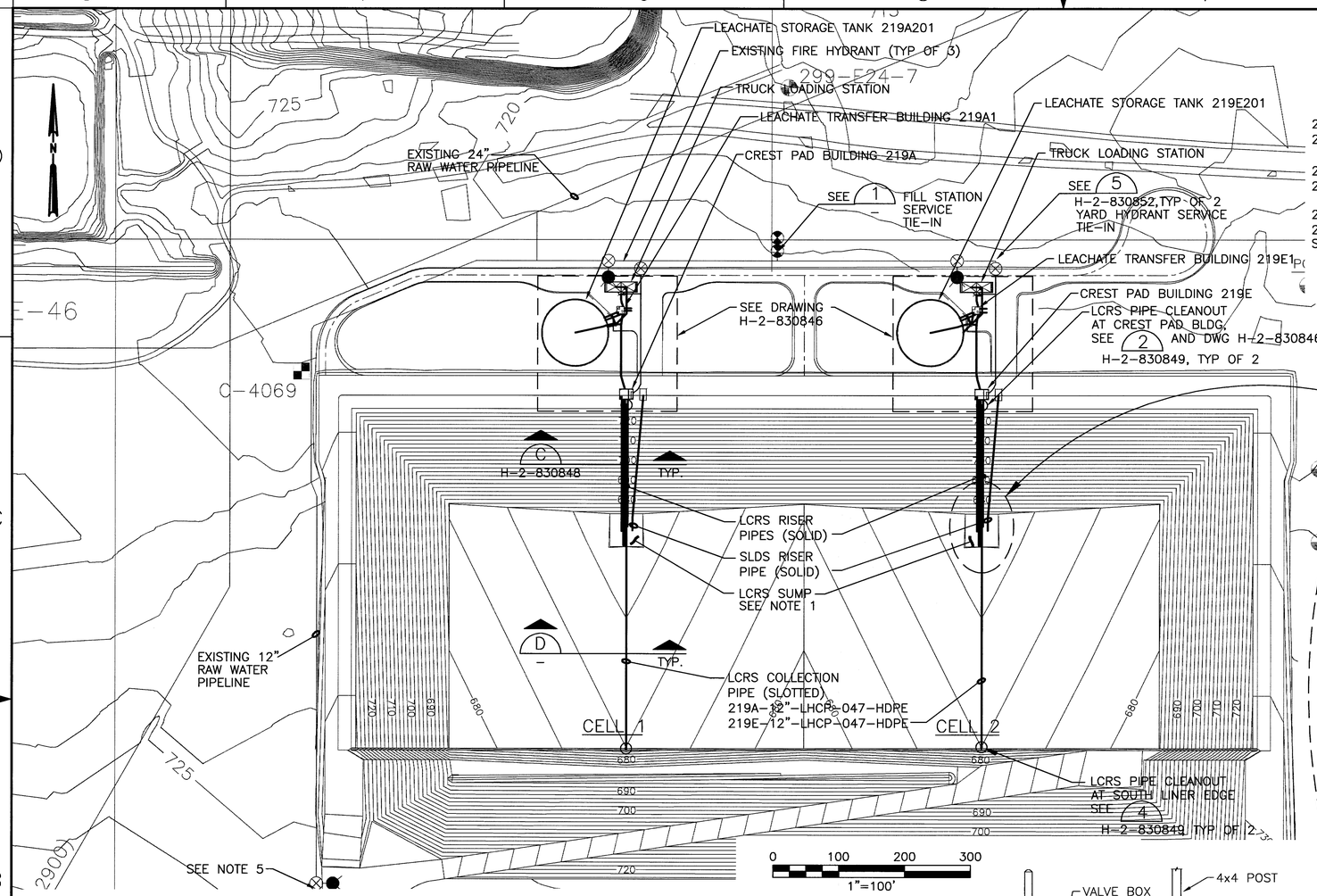

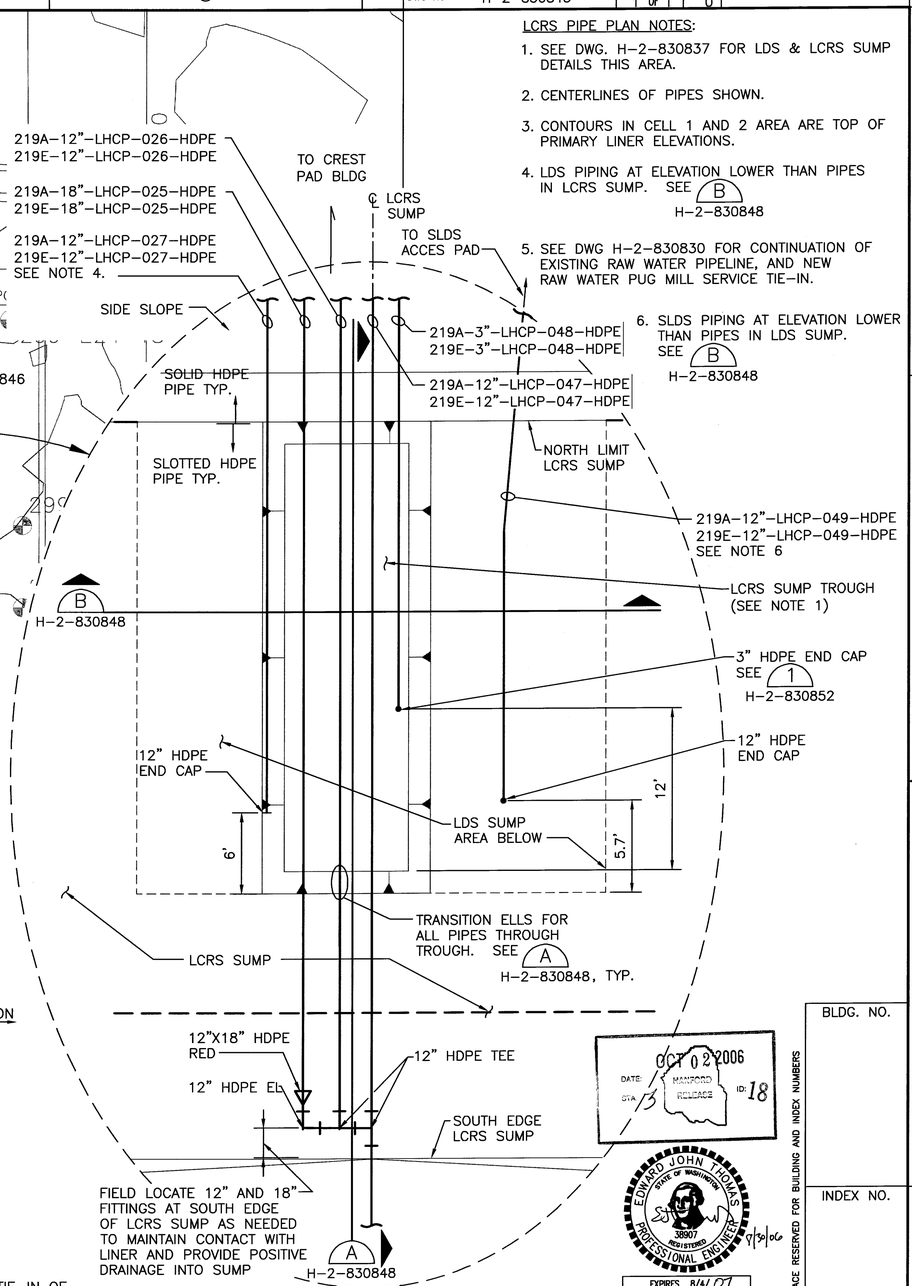

LCRS PIPE PLAN NOTES:

1. SEE DWG. H-2-830837 FOR LDS & LCRS SUMP DETAILS THIS AREA.
2. CENTERLINES OF PIPES SHOWN.
3. CONTOURS IN CELL 1 AND 2 AREA ARE TOP OF PRIMARY LINER ELEVATIONS.
4. LDS PIPING AT ELEVATION LOWER THAN PIPES IN LCRS SUMP. SEE B H-2-830848
5. SEE DWG H-2-830830 FOR CONTINUATION OF EXISTING RAW WATER PIPELINE, AND NEW RAW WATER PUG MILL SERVICE TIE-IN.
6. SLDS PIPING AT ELEVATION LOWER THAN PIPES IN LDS SUMP. SEE B H-2-830848

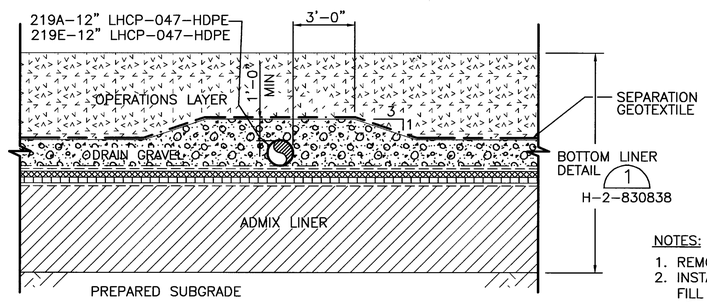

NOTES:

1. OPERATIONS LAYER THICKNESS VARIES ACROSS CELL BOTTOM WITH A 3-FOOT MIN. THICKNESS.

LCRS COLLECTION PIPE (D) NTS H-2-830849

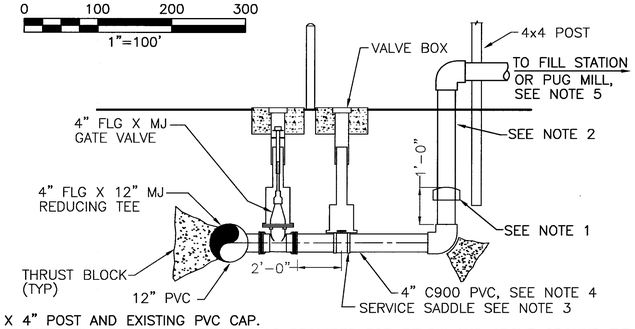

NOTES:

1. REMOVE 4" X 4" POST AND EXISTING PVC CAP.
2. INSTALL 4" SOCKET WELD PIPING AND FITTINGS AS REQUIRED FOR BELOW AND ABOVE GROUND TIE-IN OF FILL STATION AND PUG MILL.
3. 1" DRAIN VALVE, 1" DIA X 12" LONG GSP, AND 2 CUBIC FEET OF DRAIN GRAVEL NOT SHOWN FOR CLARITY.
4. EXISTING 4" C900 PVC IS APPROXIMATELY 200' LONG FOR PUG MILL SERVICE AND APPROXIMATELY 10' LONG FOR FILL STATION SERVICE.
5. COORDINATE WITH CONSTRUCTION MANAGER FOR REQD DEMOLITION OF ABOVE GROUND PIPING AND RE-CAPPING OF BURIED PIPING AFTER PROJECT COMPLETION.

FILL STATION/PUG MILL TIE-IN (1) NTS H-2-830830

TYPICAL LCRS/LDS SUMP PIPING SCHEMATIC CELLS 1 & 2 NTS

OCT 02 2006 DATE: STA 13 MANFORD RELEASE ID: 18

EDWARD JOHN THOMAS STATE OF WASHINGTON 38907 REGISTERED PROFESSIONAL ENGINEER 9/30/06

EXPIRES 8/4/07

MY STAMP & SEAL APPLY TO THOSE CHANGES MADE IN REVISION 0. THE ORIGINAL DESIGN WAS NOT PREPARED UNDER MY DIRECTION.

CH2MHILL

BLDG. NO.

INDEX NO.

THIS SPACE RESERVED FOR BUILDING AND INDEX NUMBERS

DWG NO	TITLE	REF NUMBER	TITLE
DRAWING TRACEABILITY LIST		NEXT USED ON	REFERENCES

REV Rev	MFD	REV NO	DESCRIPTION	REV BY DATE	ENGR COMPANY
RS	A		SCH B AS-BUILTS FCN 100531 & 100542, ECN 723902 REV 0	5/12/06	E. THOMAS CH2MHill

REVISIONS

NAME	DATE	COMPANY
DRAWN BY D. KENDALL	6-30-06	CH2MHill
DFTG APPROVED E. THOMAS	9/30/06	CH2MHill
ENGINEER H. BAUNE	9/7/06	CH2M

23006

U.S. DEPARTMENT OF ENERGY
Office of River Protection

TITLE IDF LEACHATE COLLECTION PIPING PLAN

SIZE	BLDG NO	INDEX NO	DWG NO	REV
D	200E	8500	H-2-830845	0

SCALE AS SHOWN EDT 822180 SHEET 1 OF 1

ORP_TB_D [12-02].DWG

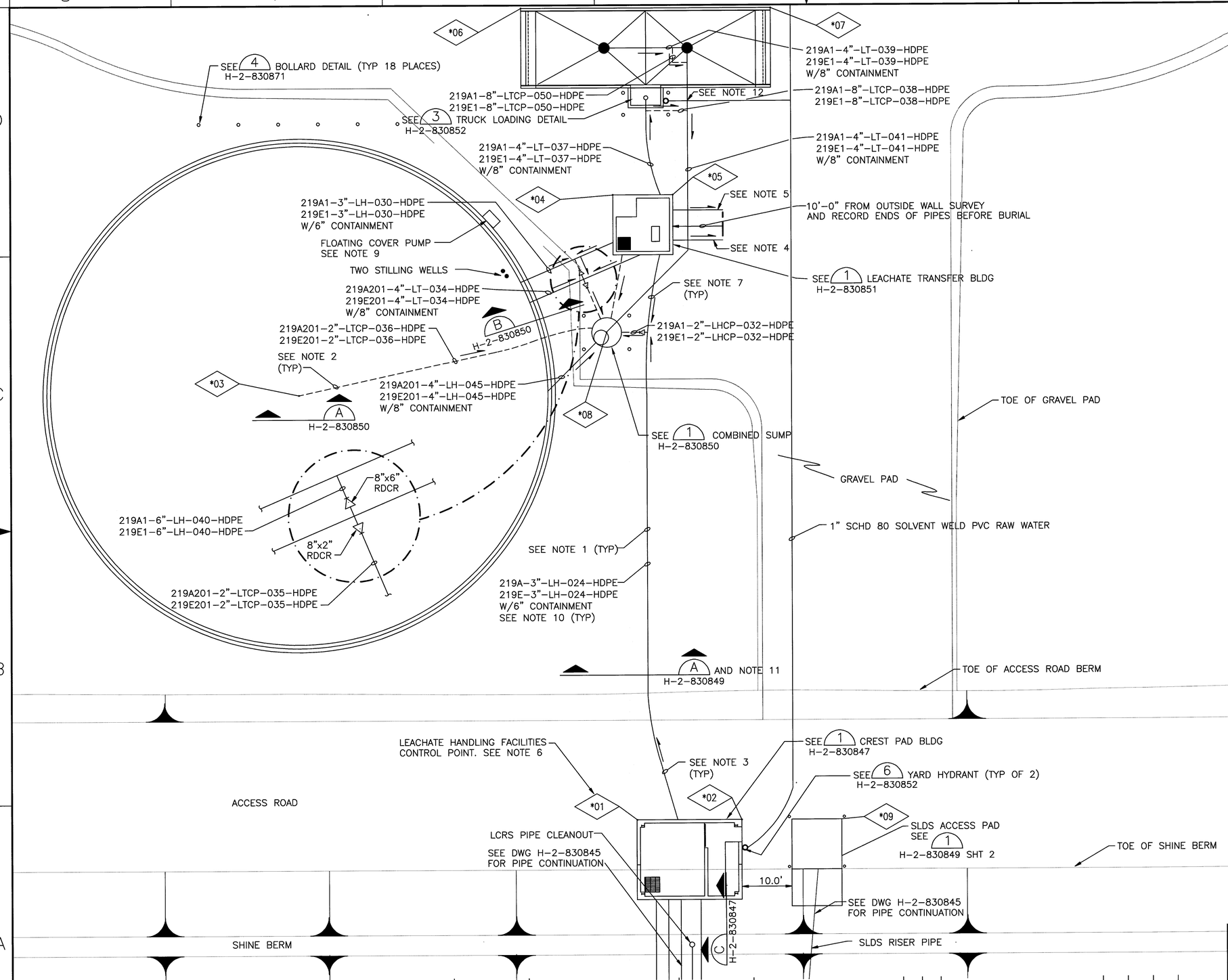

NOTES:

1. PIPES SHOWN AS SOLID LINES NORTH OF CREST PAD BLDG. INDICATE BURIED DOUBLE CONTAINED LEACHATE PIPING OR RAW WATER PIPING.
2. DASHED LINE INDICATES BURIED SINGLE WALL PIPING FOR SECONDARY CONTAINMENT SYSTEMS.
3. SLOPE ALL PIPING IN DIRECTION INDICATED AT 1% SLOPE MINIMUM. FOR PRIMARY PIPE FLOW DIRECTIONS, SEE P&ID'S ON H-2-830854, SHEETS 1 THROUGH 4.
4. INSTALL HDPE CAP ON CARRIER PIPE AND FIXED END SEAL FOR SECONDARY CONTAINMENT PIPE. THIS PIPE IS PROVIDED FOR FUTURE PUMP SUCTION CONNECTION TO FUTURE LEACHATE STORAGE TANK.
5. INSTALL HDPE CAP ON CARRIER PIPE AND FIXED END SEAL FOR SECONDARY CONTAINMENT PIPE. THIS PIPE IS PROVIDED FOR FUTURE LEACHATE TRANSFER BUILDING DISCHARGE CONNECTION TO FUTURE LEACHATE STORAGE TANK.
6. SEE DWG H-2-830829, SHT 2 FOR LEACHATE HANDLING FACILITIES SURVEY CONTROL POINTS. FOR CELL 1 FACILITIES CONTROL POINTS, REPLACE "*" WITH 4; FOR CELL 2 FACILITIES CONTROL POINTS, REPLACE "*" WITH 5.

   EXAMPLE: CELL 2 <*02> IS <502>
7. BEND RADIUS SHALL NOT BE LESS THAN ALLOWED BY PIPE MANUFACTURER.
8. STILLING WELLS SHALL BE INSTALLED PER TANK MANUFACTURER REQUIREMENTS AT THE LOCATION SHOWN FOR ANALOG AND DISCRETE LEVEL INSTRUMENTATION.
9. FLOATING COVER PUMP AND ASSOCIATED BASEPLATE/BRACKET SHALL BE INSTALLED PER TANK MANUFACTURER REQUIREMENTS AT THE LOCATION SHOWN. THIS PUMP SHALL BE OPERATED AS REQD TO MINIMIZE DEPTH OF RAIN/SNOWMELT ACCUMULATION ON TOP OF FLOATING COVER.
10. PIPING DESIGNATIONS ARE IDENTIFIED FOR CELL 1 AND CELL 2 LEACHATE PIPELINES. THE "219A" PREFIX IS FOR CELL 1 AND THE "219E" PREFIX IS FOR CELL 2.
11. APPLIES TO ALL PIPING NORTH OF CREST PAD BUILDING INCLUDING RAW WATER PIPING EXCEPT RAW WATER PIPIING SHALL HAVE MINIMUM 3'-6" OF COVER.
12. INSTALL 1" RAW WATER PIPE A MINIMUM OF 6" BELOW 8" HDPE PIPE.

N

0 10 20 30
1"=10'

BLDG. NO.

INDEX NO.

THIS SPACE RESERVED FOR BUILDING AND INDEX NUMBERS

OCT 02 2006
MANFORD RELEASE
ID: 18

EDWARD JOHN THOMAS
STATE OF WASHINGTON
38907
REGISTERED PROFESSIONAL ENGINEER
EXPIRES 8/4/07

CH2MHILL

DWG NO	TITLE
DRAWING TRACEABILITY LIST	

REF NUMBER	TITLE
REFERENCES	
NEXT USED ON	

REV Rel	MFD	REV NO	DESCRIPTION	REV BY DATE		ENGR COMPANY
RS	A		SCH B AS-BUILTS FCN 100493, ECN 723902 REV 0	5/12/06	E THOMAS	CH2MHill

	NAME	DATE	COMPANY
DRAWN BY	D KENDALL	5-30-06	CH2MHill
DFTG APPROVED	E THOMAS	5/30/06	CH2MHill
ENGINEER	H BAUNE	9/7/06	CH2M

U.S. DEPARTMENT OF ENERGY
Office of River Protection

TITLE
IDF
LEACHATE TRANSFER
PIPING PLAN

SIZE	BLDG NO	INDEX NO	DWG NO	REV
D	219A 219A1	8500	H-2-830846	0

SCALE AS SHOWN EDT 822180 SHEET 1 OF 1

7016

ORP_TB_D [12-02].DWG

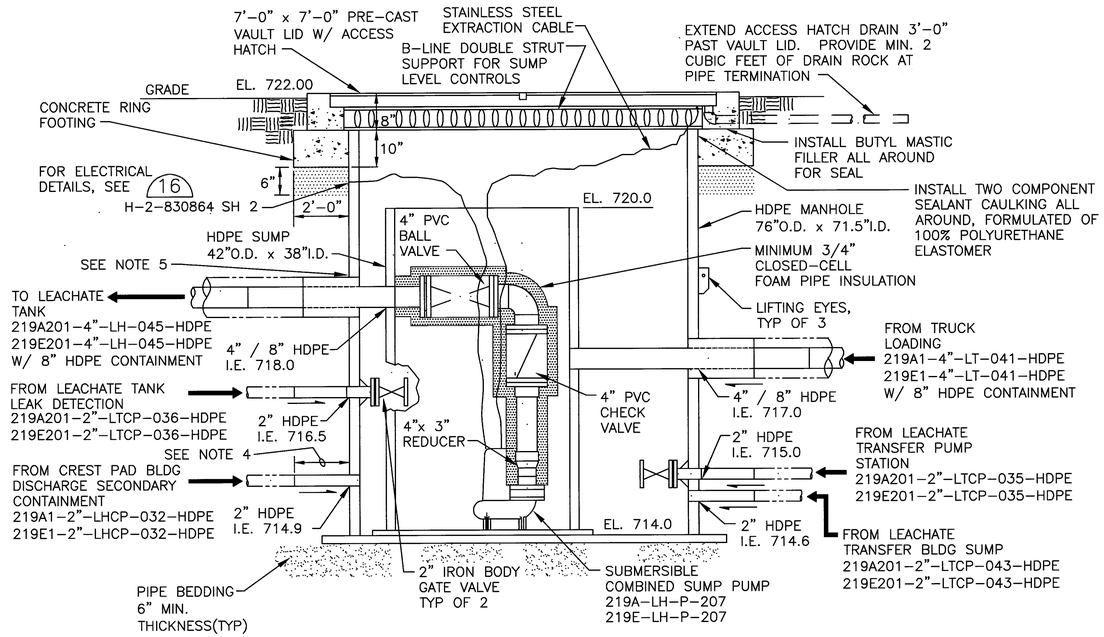

ELEVATION

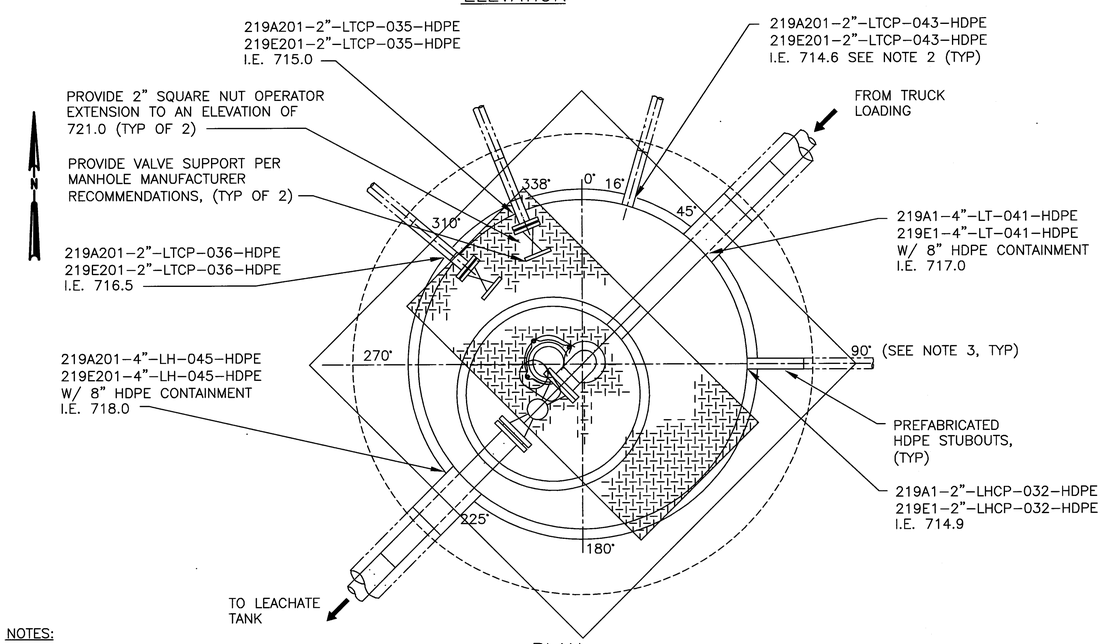

PLAN

COMBINED SUMP MANHOLE (1)

NTS H-2-830846

NOTES:

1. INSTALL 4 BOLLARDS AROUND ACCESS HATCH.
2. PIPING AND EQUIPMENT DESIGNATIONS ARE IDENTIFIED FOR CELL 1 AND CELL 2. THE "219A" PREFIX IS FOR CELL 1 AND THE "219E" PREFIX IS FOR CELL 2.
3. MANHOLE STUBOUT ANGLES AND INVERT ELEVATIONS SHALL BE FIELD VERIFIED PRIOR TO FABRICATION OF MANHOLE.
4. PROVIDE DISTANCE AS REQD TO BUTT FUSE IN FIELD, TYP.
5. PROVIDE FUSION WELDED GUSSETED, SHOP FABRICATED PENETRATION CONNECTIONS. NO FIELD WELDS, TYP.

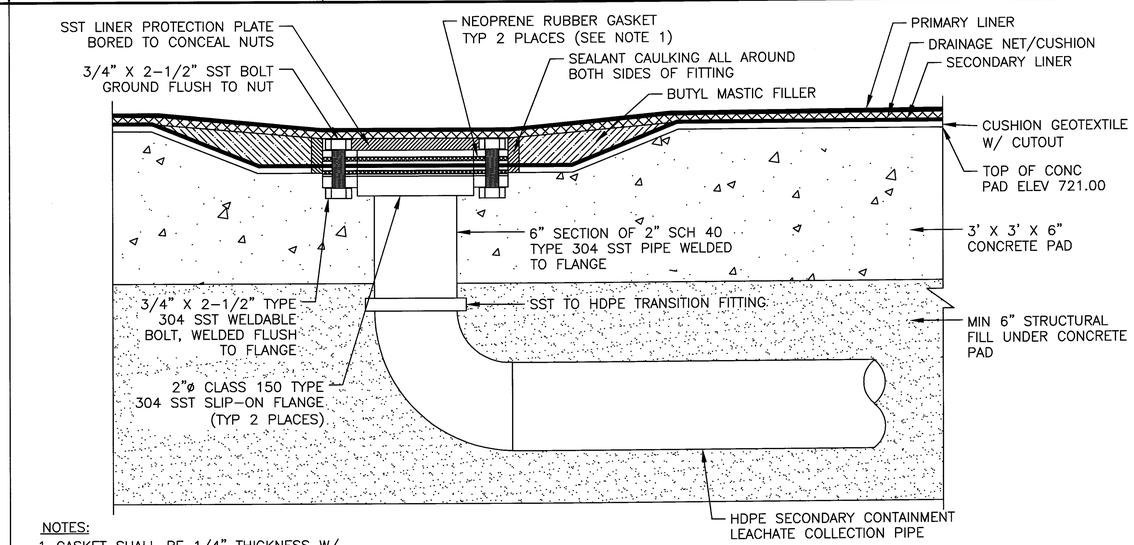

NOTES:

1. GASKET SHALL BE 1/4" THICKNESS W/ 35-40 DUROMETER HARDNESS

LEACHATE TANK LEAK DETECTION PENETRATION (A)

NTS H-2-830846

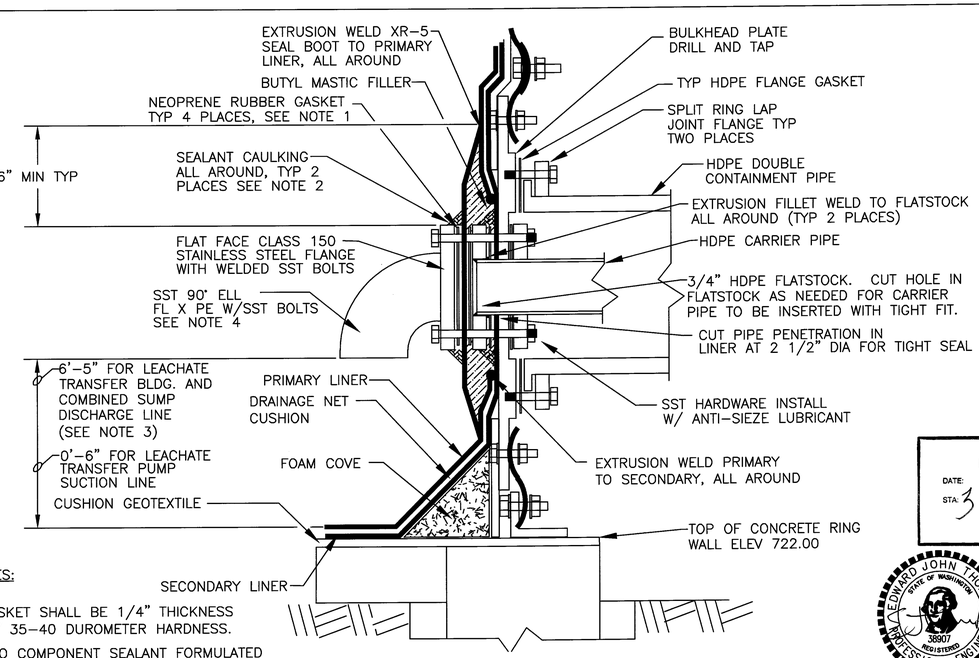

NOTES:

1. GASKET SHALL BE 1/4" THICKNESS W/ 35-40 DUROMETER HARDNESS.
2. TWO COMPONENT SEALANT FORMULATED OF 100% POLYURETHRANE ELASTOMER.
3. PROVIDE MIN. OF 2 PIPE SUPPORTS PER DISCHARGE LINE. PIPE SUPPORTS SHALL CONNECT TO TANK WALL PER TANK MANUFACTURER'S REQUIREMENTS.
4. SST RAISED FACE SLIP-ON FLANGES SHALL BE WELDED TO THE THREE SST INLET AND OUTLET PIPES.

LEACHATE TANK WALL PENETRATION (B)

NTS H-2-830846

DATE: OCT 02 2006 STA: 3 MANFORD RELEASE ID: 18

EDWARD JOHN THOMAS STATE OF WASHINGTON 38907 REGISTERED PROFESSIONAL ENGINEER 8/30/06

EXPIRES 8/4/07

CH2MHILL

Approved for Public Release; Further Dissemination Unlimited

DWG NO	TITLE
DRAWING TRACEABILITY LIST	

REF NUMBER	TITLE
NEXT USED ON	REFERENCES

REV NO	DESCRIPTION	REV BY DATE
0	SCH B AS-BUILTS FCN 100490 & 100495, ECN 723902 REV 0	5/12/06

REVISIONS

	NAME	DATE	COMPANY
DRAWN BY	D KENDALL	8-30-06	CH2MHill
DWG APPROVED	E THOMAS	8/30/06	CH2MHill
	E THOMAS		CH2MHill
ENGINEER	H BAUNE	9/7/06	CH2M

U.S. DEPARTMENT OF ENERGY
Office of River Protection

TITLE IDF LCRS / LDS SECTIONS AND DETAILS

SIZE	BLDG NO	INDEX NO	DWG NO	REV
D	200E	8500	H-2-830850	0

SCALE AS SHOWN EDT 822180 SHEET 1 OF 1

13296

ORP_TB_D [12-02].DWG

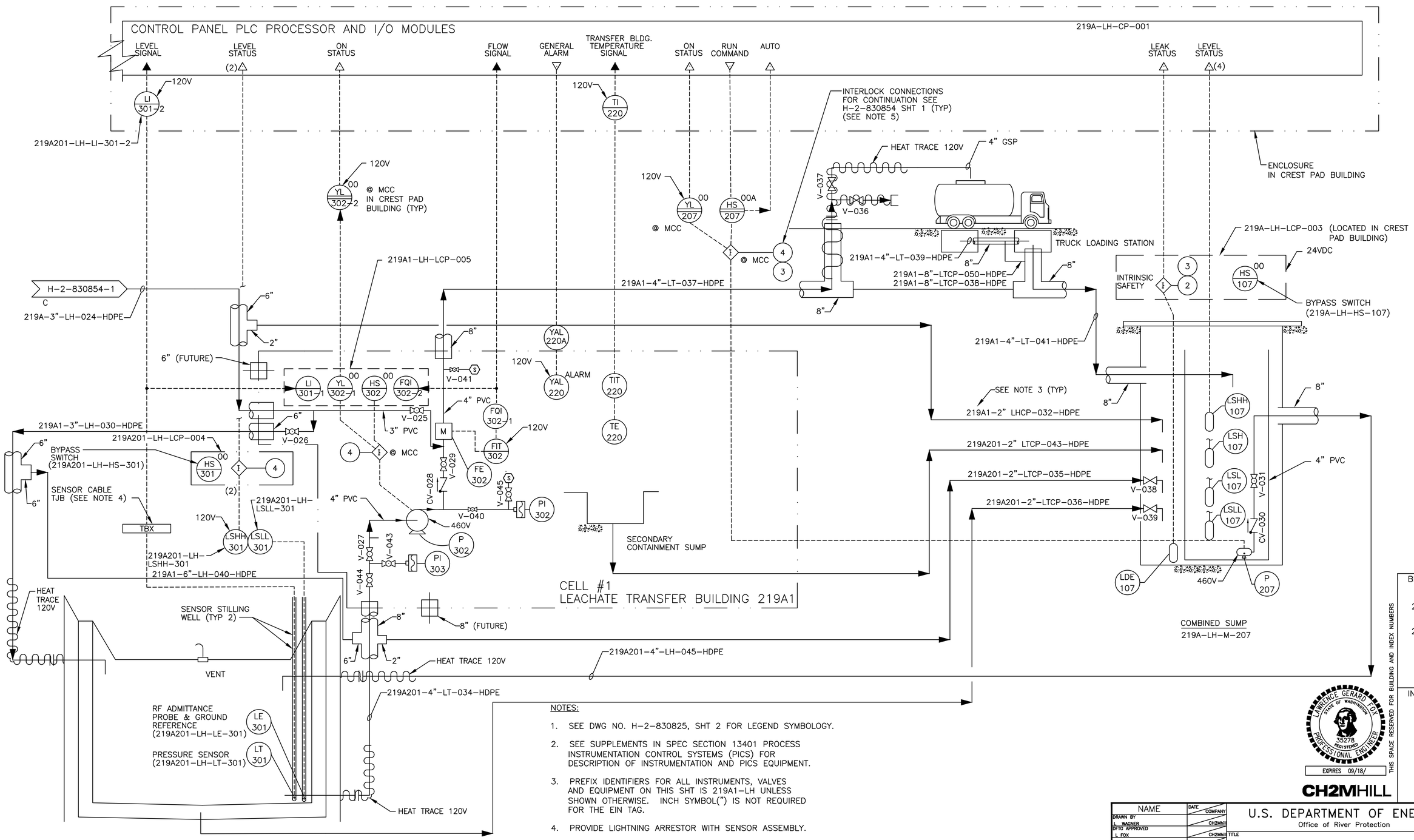

NOTES:

1. SEE DWG NO. H-2-830825, SHT 2 FOR LEGEND SYMBOLOGY.
2. SEE SUPPLEMENTS IN SPEC SECTION 13401 PROCESS INSTRUMENTATION CONTROL SYSTEMS (PICS) FOR DESCRIPTION OF INSTRUMENTATION AND PICS EQUIPMENT.
3. PREFIX IDENTIFIERS FOR ALL INSTRUMENTS, VALVES AND EQUIPMENT ON THIS SHT IS 219A1-LH UNLESS SHOWN OTHERWISE. INCH SYMBOL(") IS NOT REQUIRED FOR THE EIN TAG.
4. PROVIDE LIGHTNING ARRESTOR WITH SENSOR ASSEMBLY.
5. FOR INTERLOCK CONFIGURATIONS SEE SHTS H-2-830857

DWG NO	TITLE	REF NUMBER	TITLE
DRAWING TRACEABILITY LIST		REFERENCES	
		NEXT USED ON	

REV NO	DESCRIPTION	REV BY DATE	ENGR COMPANY
0	SCH B AS-BUILTS/FCN 100493,100584, 100614, 100617 / ECN 723902 REV 0.	07/05/06	J DEHNER CH2Mhill

REVISIONS

NAME	DATE	COMPANY
DRAWN BY L WAGNER		CH2Mhill
DFTG APPROVED L FOX		CH2Mhill
ENGINEER H BAUNE		

U.S. DEPARTMENT OF ENERGY
Office of River Protection

TITLE
IDF
CELL #1 P&ID

SIZE	BLDG NO	INDEX NO	DWG NO	REV
D	219A1 219A201	7004	H-2-830854	0

SCALE NONE EDT 822180 SHEET 2 OF

PLOTID ORP_TB_D [12-02].DWG

BLDG. NO.
219A
219A1
219A201
219E
219E1
219E201

INDEX NO.

THIS SPACE RESERVED FOR BUILDING AND INDEX NUMBERS

LAWRENCE GERARD FOX STATE OF WASHINGTON 35278 REGISTERED PROFESSIONAL ENGINEER
EXPIRES 08/18/

CH2MHILL

PAGE 6 SKETCH-002

WAS ECR-19-000084

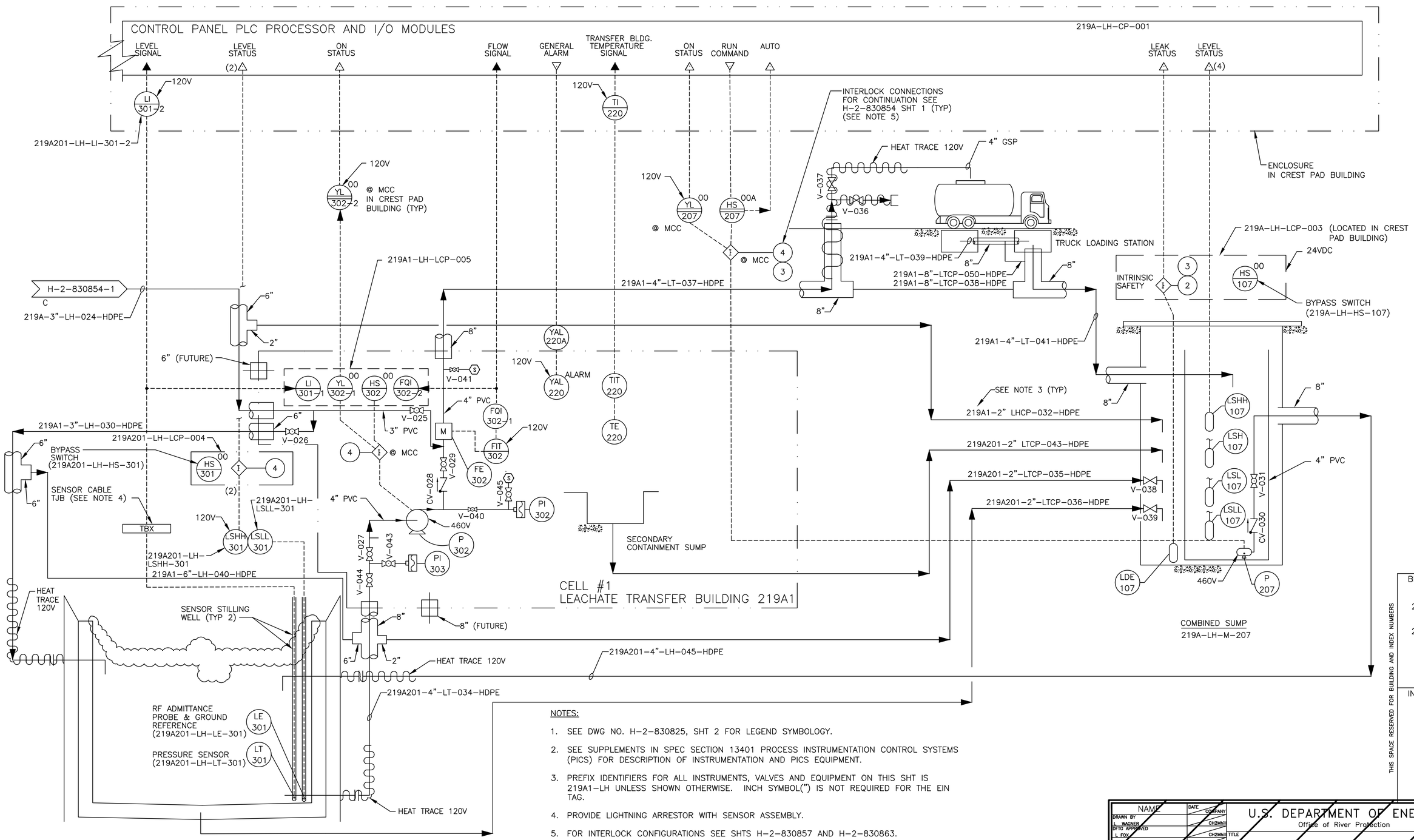

NOTES:

1. SEE DWG NO. H-2-830825, SHT 2 FOR LEGEND SYMBOLOGY.
2. SEE SUPPLEMENTS IN SPEC SECTION 13401 PROCESS INSTRUMENTATION CONTROL SYSTEMS (PICS) FOR DESCRIPTION OF INSTRUMENTATION AND PICS EQUIPMENT.
3. PREFIX IDENTIFIERS FOR ALL INSTRUMENTS, VALVES AND EQUIPMENT ON THIS SHT IS 219A1-LH UNLESS SHOWN OTHERWISE. INCH SYMBOL(") IS NOT REQUIRED FOR THE EIN TAG.
4. PROVIDE LIGHTNING ARRESTOR WITH SENSOR ASSEMBLY.
5. FOR INTERLOCK CONFIGURATIONS SEE SHTS H-2-830857 AND H-2-830863.

DWG NO	TITLE	REF NUMBER	TITLE
DRAWING TRACEABILITY LIST		NEXT USED ON	REFERENCES

REV No.	MFD	REV NO.	DESCRIPTION	REV BY DATE	ENGR	COMPANY
		1	REVISED PER ECR-19-000084 SCH B AS-BUILTS/FCN 100493,100584, 100614, 100617 / EIN 723902 REV 0.	07/05/06	J DEHNER	CH2Mhill

REVISIONS

	NAME	DATE	COMPANY
DRAWN BY	L. WAGNER		CH2Mhill
DFTG APPROVED	L. FOX		CH2Mhill
ENGINEER	W. BAUNE		

U.S. DEPARTMENT OF ENERGY
Office of River Protection

TITLE: IDF CELL #1 P&ID

SIZE	BLDG NO	INDEX NO	DWG NO	REV
D	219A1 219A201	7004	H-2-830854	1

SCALE NONE EDT 822180 SHEET 2 OF

PLOTID ORP_TB_D [12-02].DWG

BLDG. NO.
219A
219A1
219A201
219E
219E1
219E201

INDEX NO.

THIS SPACE RESERVED FOR BUILDING AND INDEX NUMBERS

PAGE 7 SKETCH-002

IS ECR-19-000084

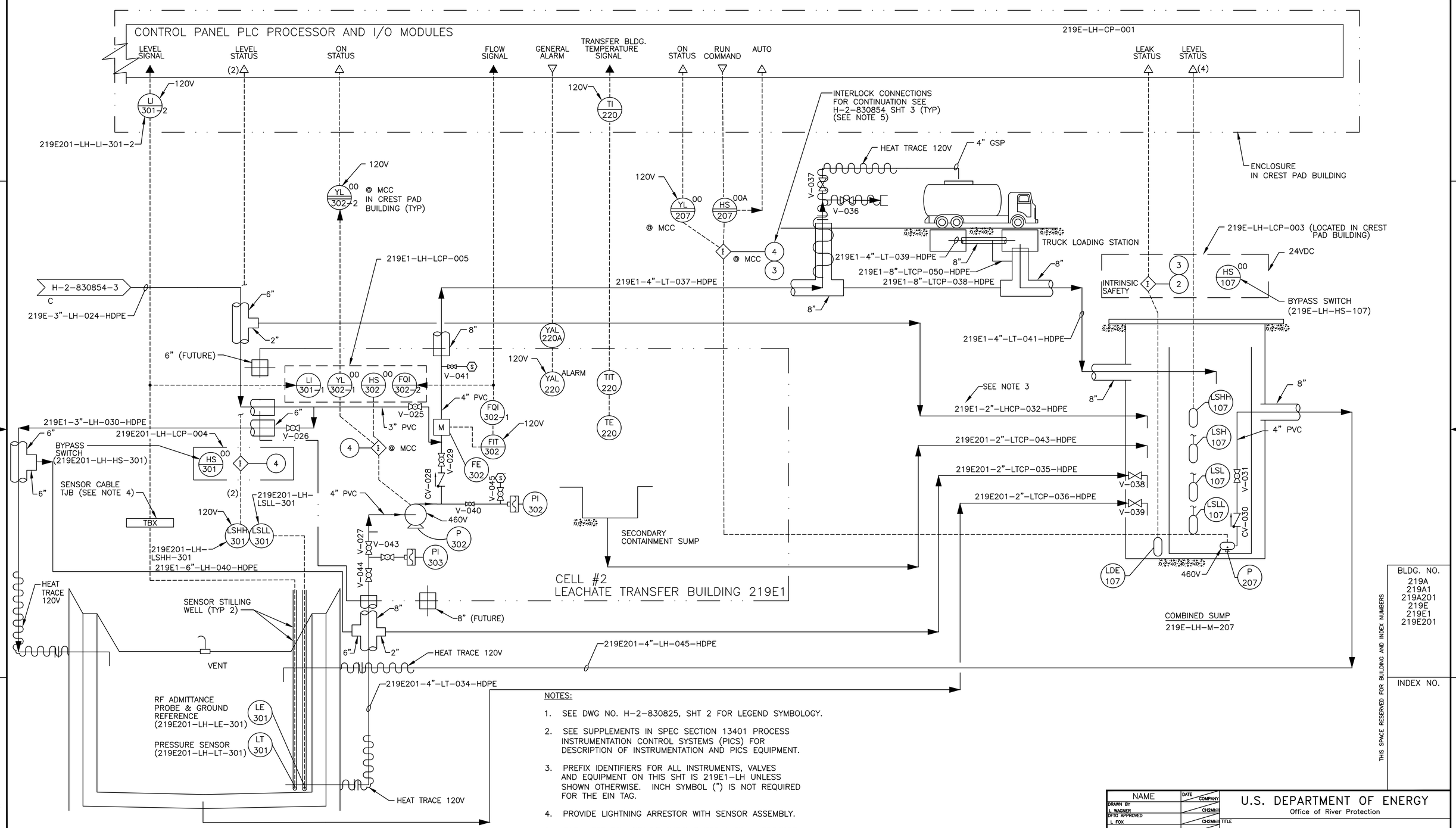

NOTES:

1. SEE DWG NO. H-2-830825, SHT 2 FOR LEGEND SYMBOLOGY.
2. SEE SUPPLEMENTS IN SPEC SECTION 13401 PROCESS INSTRUMENTATION CONTROL SYSTEMS (PICS) FOR DESCRIPTION OF INSTRUMENTATION AND PICS EQUIPMENT.
3. PREFIX IDENTIFIERS FOR ALL INSTRUMENTS, VALVES AND EQUIPMENT ON THIS SHT IS 219E1-LH UNLESS SHOWN OTHERWISE. INCH SYMBOL (") IS NOT REQUIRED FOR THE EIN TAG.
4. PROVIDE LIGHTNING ARRESTOR WITH SENSOR ASSEMBLY.
5. FOR INTERLOCK CONFIGURATIONS SEE SHTS H-2830857 AND H-2-830863.

DWG NO	TITLE	REF NUMBER	TITLE
DRAWING TRACEABILITY LIST		REFERENCES	
		NEXT USED ON	

REV NO	DESCRIPTION	REV BY DATE	ENGR / COMPANY
1	REVISED PER ECN 724712-R0	RLM 6/07	

REVISIONS

NAME	DATE	COMPANY
DRAWN BY L WAGNER		CH2MHill
DTG APPROVED L FOX		CH2MHill
ENGINEER H BAUNE		

U.S. DEPARTMENT OF ENERGY
Office of River Protection

TITLE: IDF CELL #2 P&ID

SIZE	BLDG NO	INDEX NO	DWG NO	REV
D	219A	7004	H-2-830854	1

SCALE NONE EDT 822180 SHEET 4 OF

BLDG. NO. 219A 219A1 219A201 219E 219E1 219E201

INDEX NO.

THIS SPACE RESERVED FOR BUILDING AND INDEX NUMBERS

PLOTID ORP_TB_D [12-02].DWG

WAS ECR-19-000084 PAGE 8 SKETCH-003

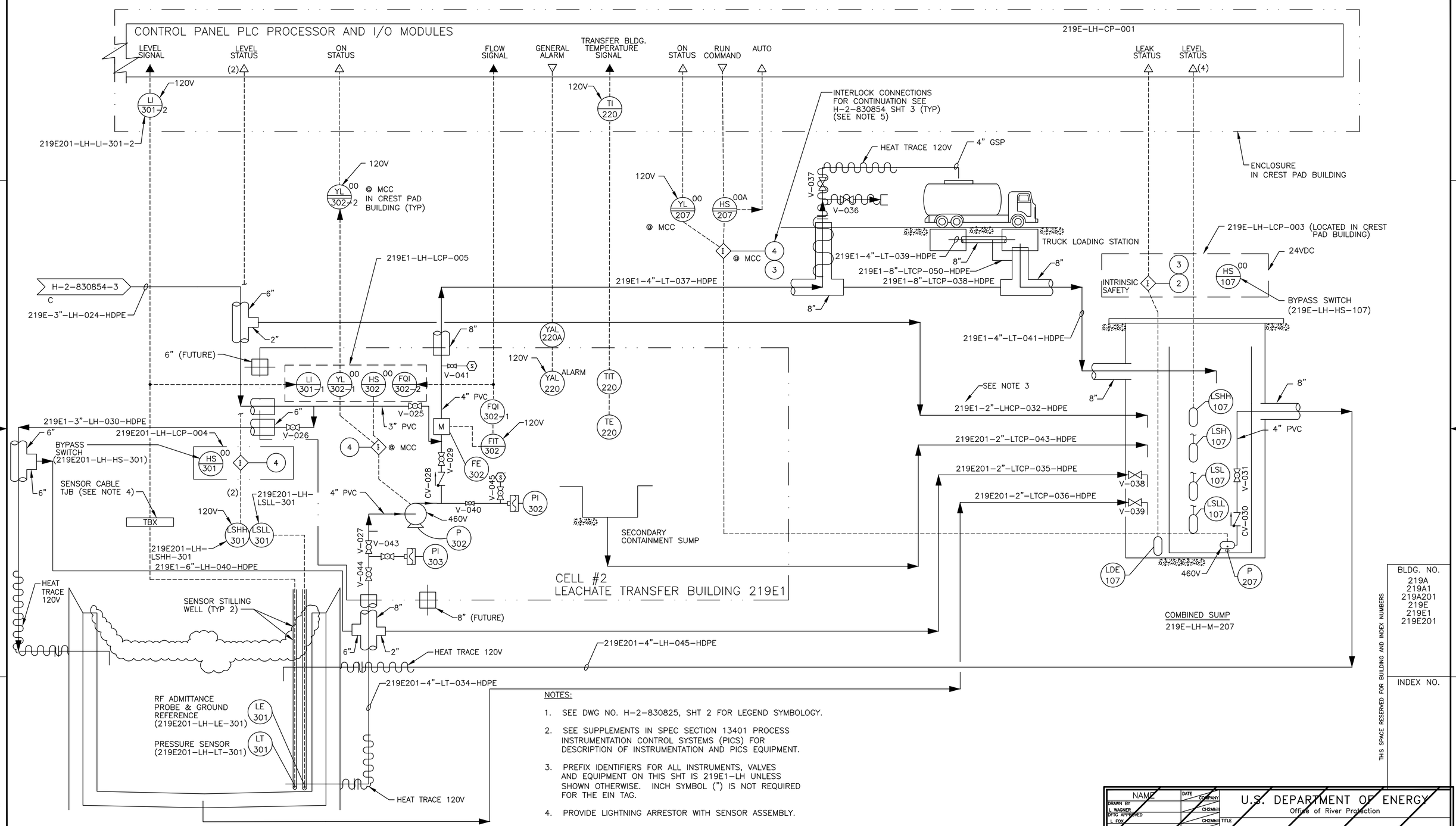

NOTES:

1. SEE DWG NO. H-2-830825, SHT 2 FOR LEGEND SYMBOLOGY.
2. SEE SUPPLEMENTS IN SPEC SECTION 13401 PROCESS INSTRUMENTATION CONTROL SYSTEMS (PICS) FOR DESCRIPTION OF INSTRUMENTATION AND PICS EQUIPMENT.
3. PREFIX IDENTIFIERS FOR ALL INSTRUMENTS, VALVES AND EQUIPMENT ON THIS SHT IS 219E1-LH UNLESS SHOWN OTHERWISE. INCH SYMBOL (") IS NOT REQUIRED FOR THE EIN TAG.
4. PROVIDE LIGHTNING ARRESTOR WITH SENSOR ASSEMBLY.
5. FOR INTERLOCK CONFIGURATIONS SEE SHTS H-2830857 AND H-2-830863.

DWG NO	TITLE	REF NUMBER	TITLE
DRAWING TRACEABILITY LIST		NEXT USED ON	REFERENCES

REV No.	MFD	DESCRIPTION	REV BY DATE	ENGR	COMPANY
2		REVISED PER ECR-19-000084			
1		REVISED PER ECN 724712-RD	RLM 6/07		

REVISIONS

	NAME	DATE	COMPANY
DRAWN BY	L. WAGNER		CH2MHill
DPTG APPROVED	L. FOX		CH2MHill
ENGINEER	H. JAUNE		

U.S. DEPARTMENT OF ENERGY
Office of River Protection

TITLE: IDF CELL #2 P&ID

SIZE	BLDG NO	INDEX NO	DWG NO	REV
D	219A	7004	H-2-830854	2

SCALE NONE EDT 822180 SHEET 4 OF

PLOTID ORP_TB_D (12-02).DWG

BLDG. NO.
219A
219A1
219A201
219E
219E1
219E201

INDEX NO.

THIS SPACE RESERVED FOR BUILDING AND INDEX NUMBERS

IS ECR-19-000084

PAGE 9 SKETCH-003

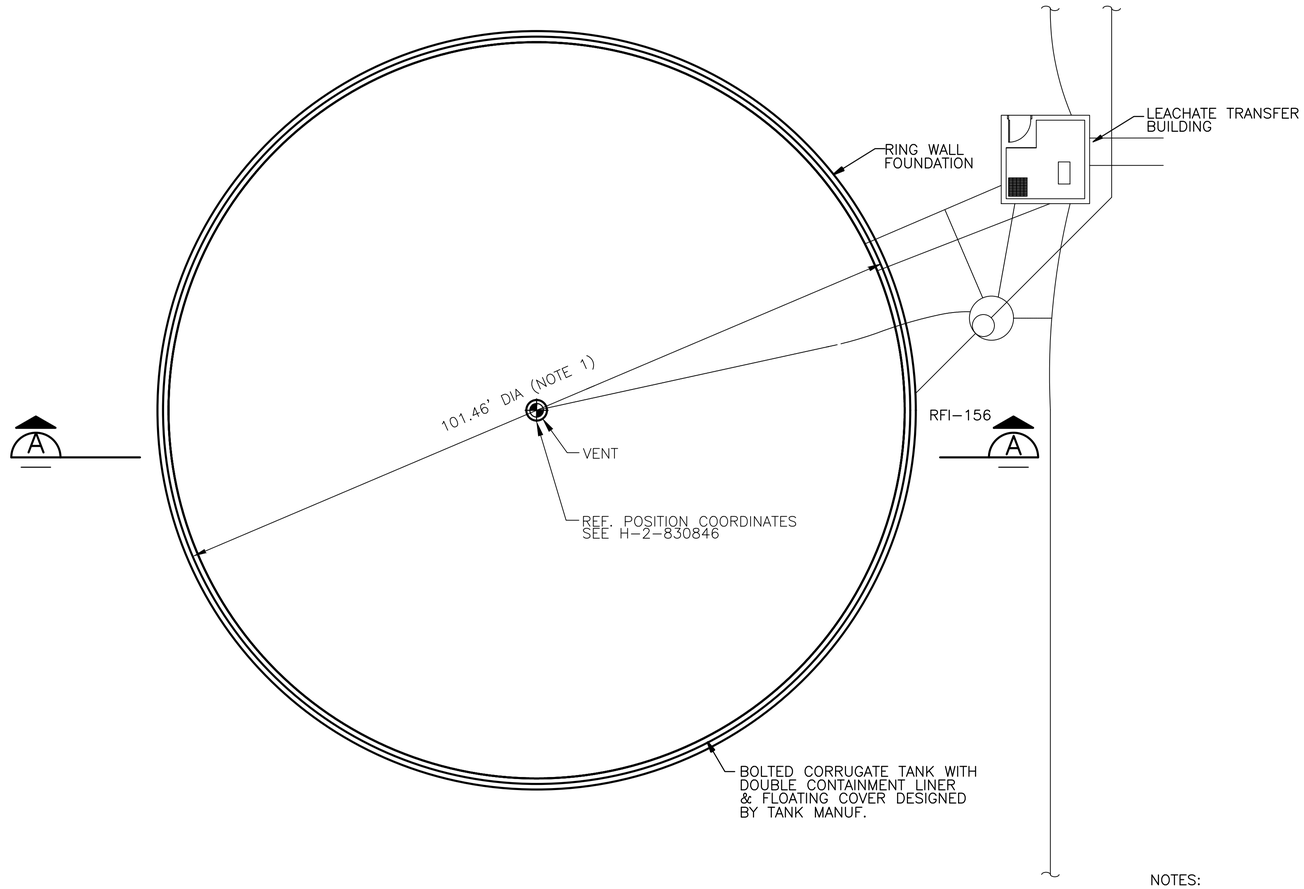

FLOOR AND ROOF PLAN

3/32"=1'-0" TYP FOR 219A201 & 219E201

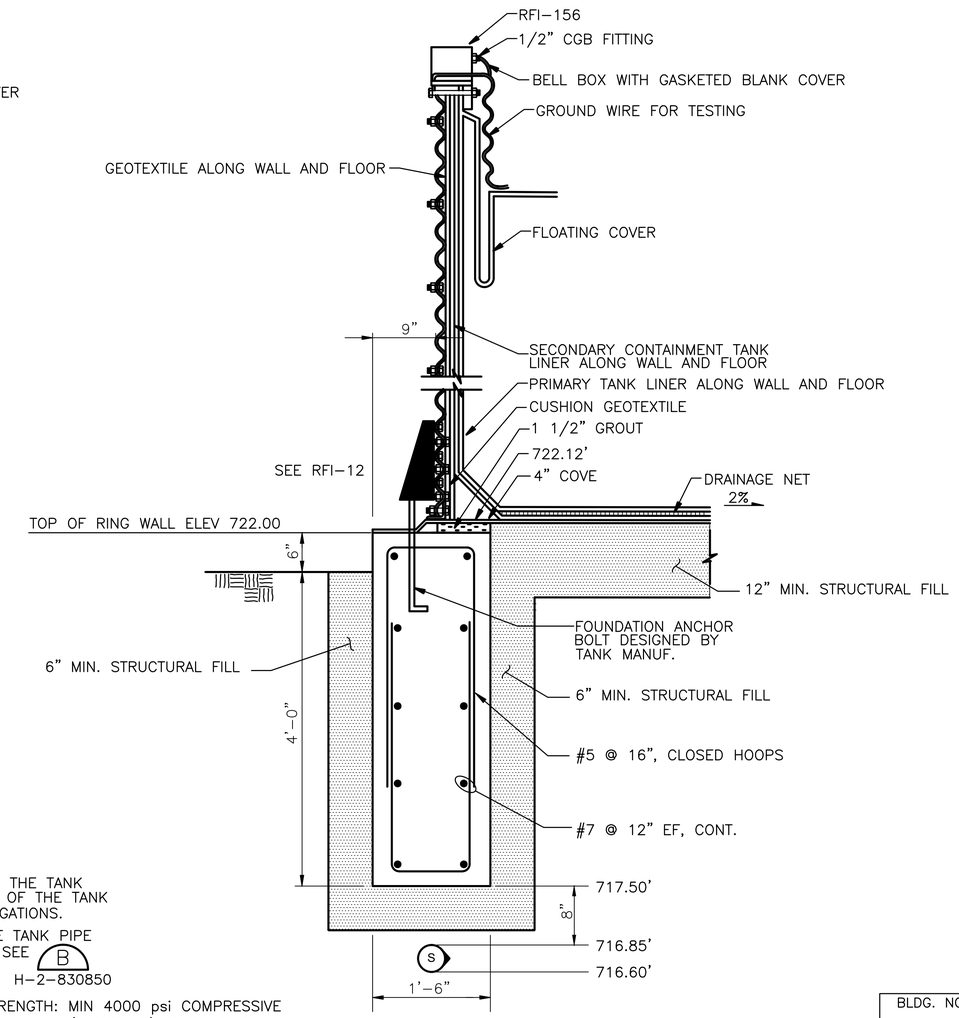

NOTES:

1. DIAMETER FOR THE TANK REFERS TO ℄ OF THE TANK SHELL CORRUGATIONS.
2. FOR LEACHATE TANK PIPE PENETRATION, SEE (B) H-2-830850
3. CONCRETE STRENGTH: MIN 4000 psi COMPRESSIVE (CLASS 40) @ 28 DAYS

   REINFORCING STEEL: ASTM 615, GRADE 60
4. AS BUILT COORDINATES CAN BE FOUND IN IDF PROJECT VI #50423, SUPPLEMENT 7.

DETAIL (1)

1"=1'-0"

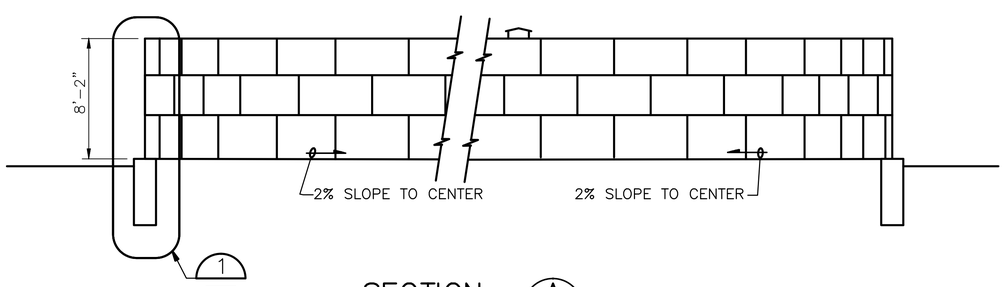

SECTION (A)

3/16"=1'-0"

DWG NO	TITLE
DRAWING TRACEABILITY LIST	

REF NUMBER	TITLE
REFERENCES	
NEXT USED ON	

REV Rel	MFD	REV NO	DESCRIPTION	REV BY DATE			
		0	SCH B AS-BUILTS, FCN-100513, ECN-723901-R0	5/12/06			E THOMAS CH2Mhill
REVISIONS							ENGR COMPANY

	NAME	DATE	COMPANY
DRAWN BY	D. KENDALL		CH2Mhill
DPTG APPROVED	S. GOTO		CH2Mhill
ENGINEER	H BAUNE		

TITLE

U.S. DEPARTMENT OF ENERGY
Office of River Protection

IDF
LEACHATE TANK FOUNDATION
PLAN, SECTION & DETAIL

SIZE	BLDG NO	INDEX NO	DWG NO	REV
D	219A201 219E201	0900	H-2-830869	0

SCALE AS SHOWN EDT 822158 SHEET 1 OF 1

PLOTID ORP_TB_D [12-02].DWG

SHINJI GOTO STATE OF WASHINGTON 35654 REGISTERED PROFESSIONAL ENGINEER
EXPIRES 7/27/

CH2MHILL

THIS SPACE RESERVED FOR BUILDING AND INDEX NUMBERS

BLDG. NO.

INDEX NO.

WAS ECR-19-000084

PAGE 12 SKETCH-005

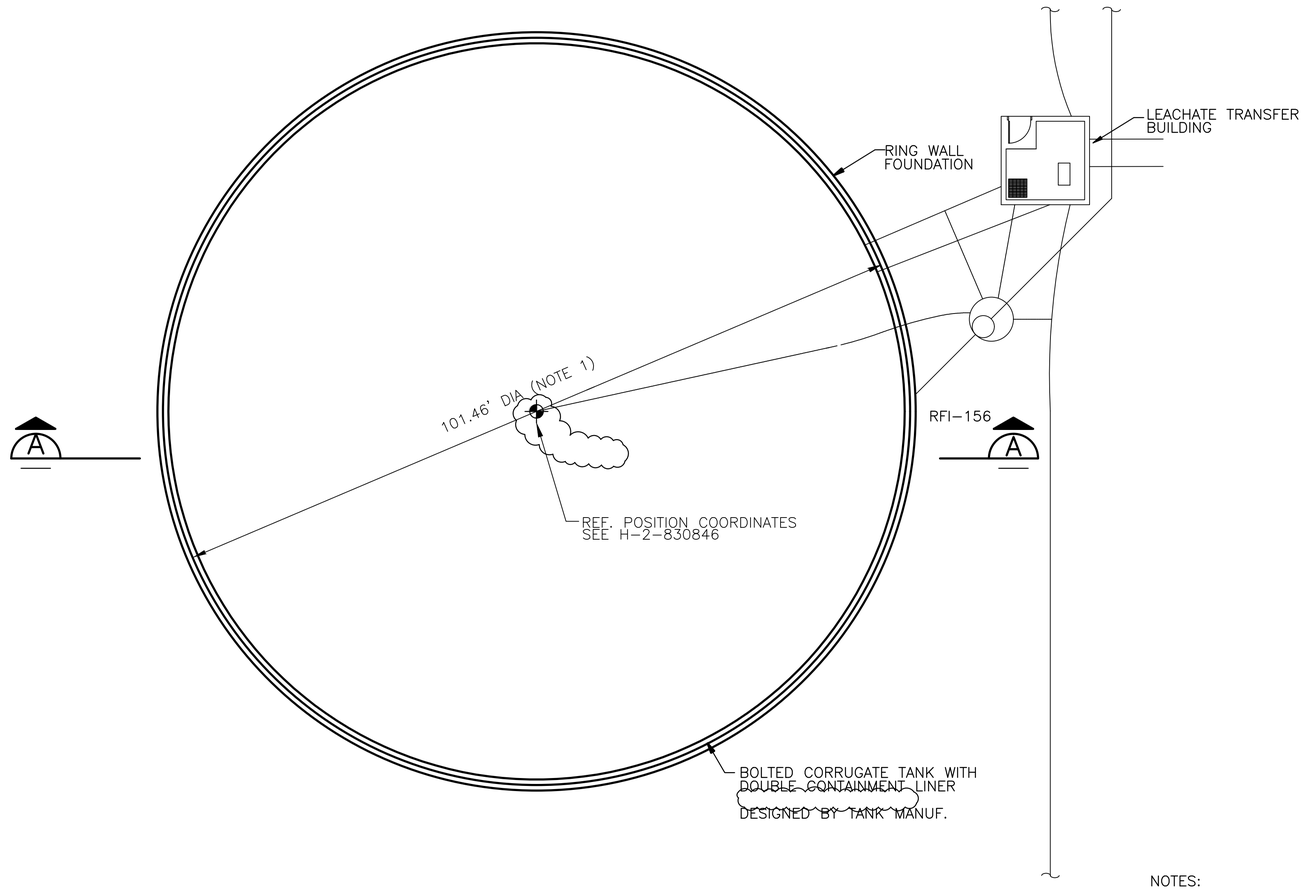

FLOOR AND ROOF PLAN
3/32"=1'-0" TYP FOR 219A201 & 219E201

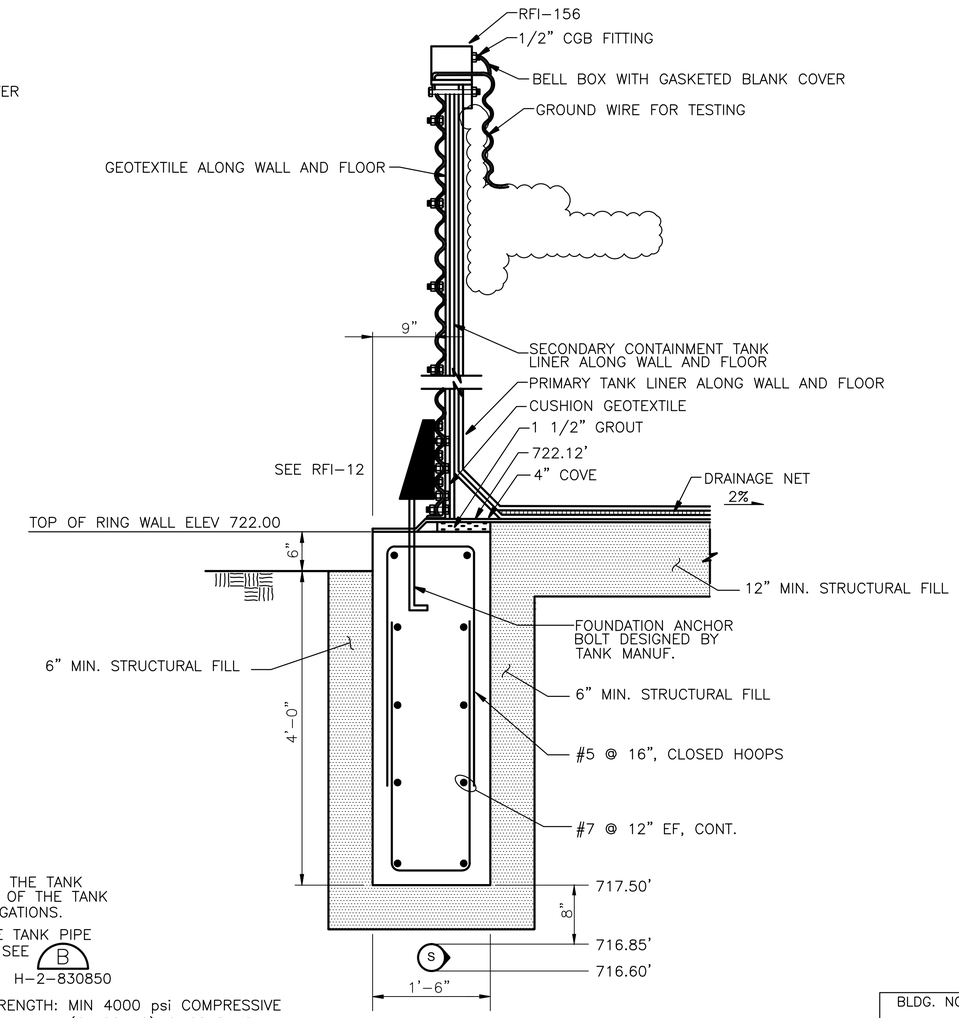

NOTES:

1. DIAMETER FOR THE TANK REFERS TO ℄ OF THE TANK SHELL CORRUGATIONS.
2. FOR LEACHATE TANK PIPE PENETRATION, SEE (B) H-2-830850
3. CONCRETE STRENGTH: MIN 4000 psi COMPRESSIVE (CLASS 40) @ 28 DAYS

   REINFORCING STEEL: ASTM 615, GRADE 60
4. AS BUILT COORDINATES CAN BE FOUND IN IDF PROJECT VI #50423, SUPPLEMENT 7.

DETAIL (1)
1"=1'-0"

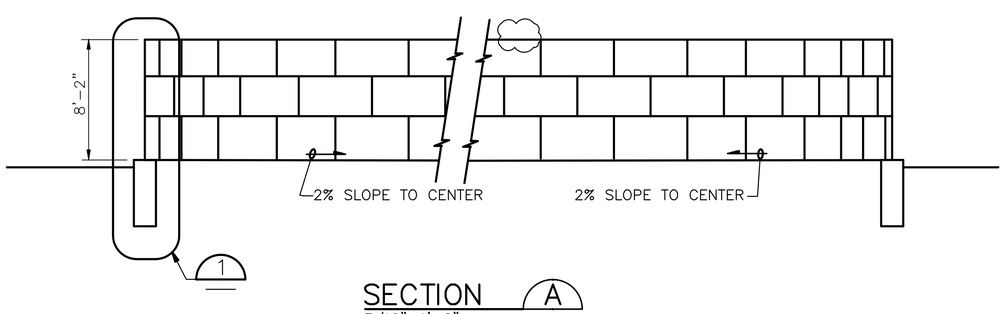

SECTION (A)
3/16"=1'-0"

DWG NO	TITLE	REF NUMBER	TITLE
DRAWING TRACEABILITY LIST		REFERENCES	
		NEXT USED ON	

REV No	REV NO	DESCRIPTION	REV BY DATE	ENGR	COMPANY
	1	REVISED PER FCR-19-000084			
	0	SCH B AS-BUILTS FCN-100513, FCN-723901-R0	5/12/06	E THOMAS	CH2MHill

REVISIONS

	NAME	DATE	COMPANY
DRAWN BY	D. KENDALL		CH2MHill
DFTG APPROVED	S. GOTO		CH2MHill
ENGINEER	W. BAUNE		

U.S. DEPARTMENT OF ENERGY
Office of River Protection
IDF
LEACHATE TANK FOUNDATION PLAN, SECTION & DETAIL

SIZE	BLDG NO	INDEX NO	DWG NO	REV
D	219A201 219E201	0900	H-2-830869	1

SCALE AS SHOWN EDT 822158 SHEET 1 OF 1

PLOTID ORP_TB_D [12-02].DWG

BLDG. NO.

INDEX NO.

THIS SPACE RESERVED FOR BUILDING AND INDEX NUMBERS

IS ECR-19-000084 PAGE 13 SKETCH-005

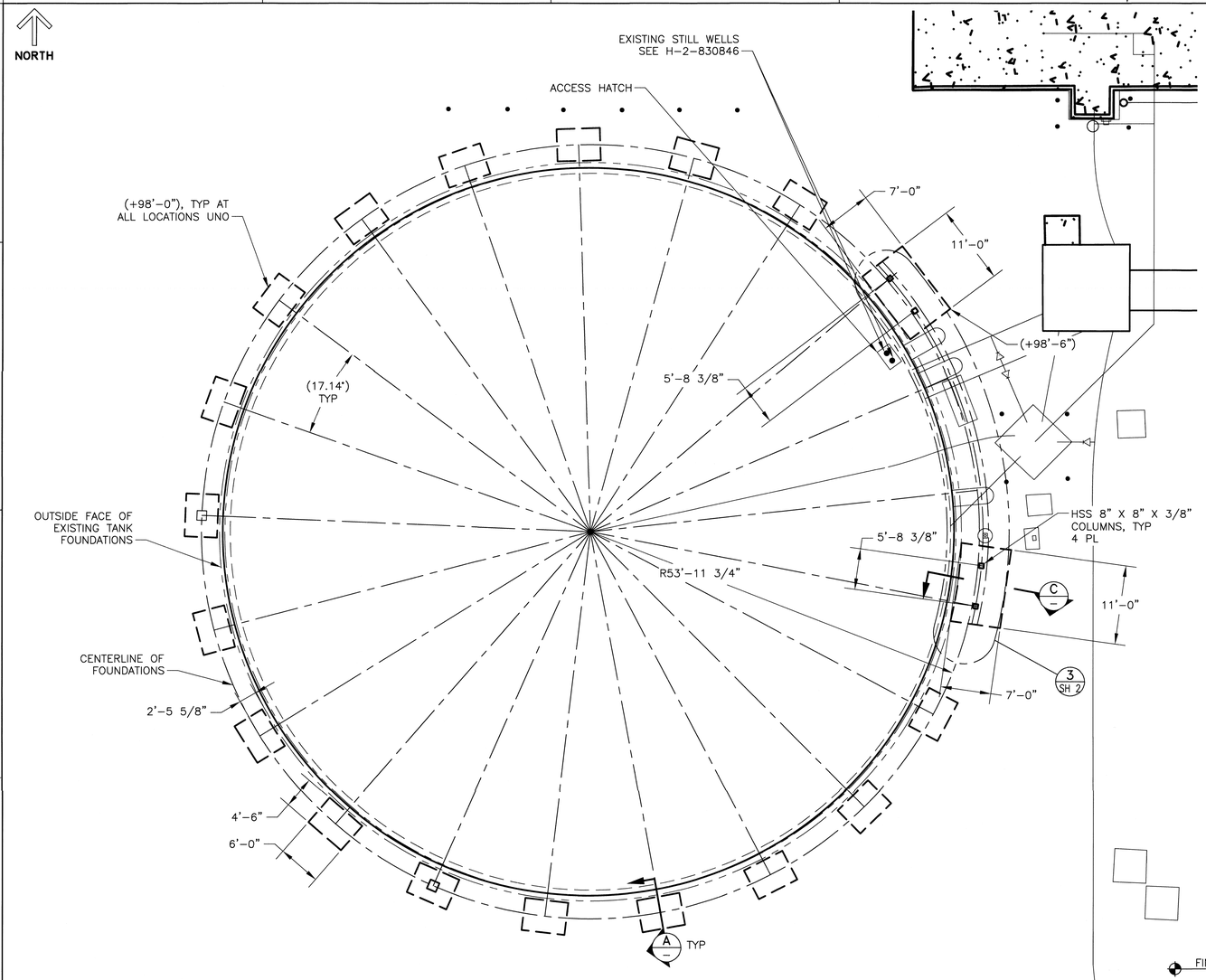

PLAN VIEW

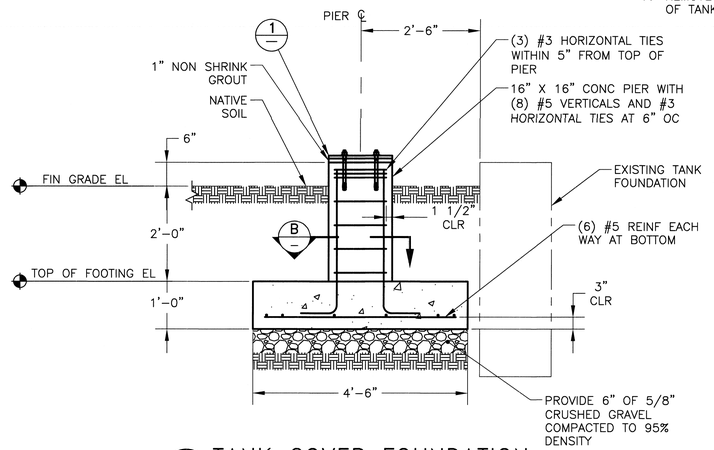

A TANK COVER FOUNDATION
SCALE: 3/4" = 1'-0"

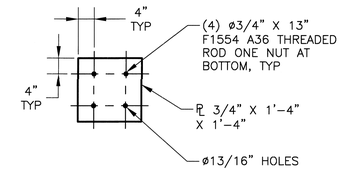

1 BASE PLATE
SCALE: 3/4" = 1'-0"

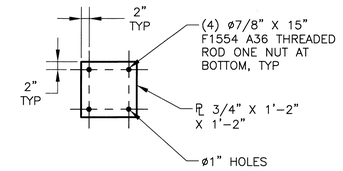

2 BASE PLATE
SCALE: 3/4" = 1'-0"

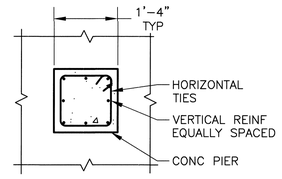

B PIER SECTION
SCALE: 3/4" = 1'-0"

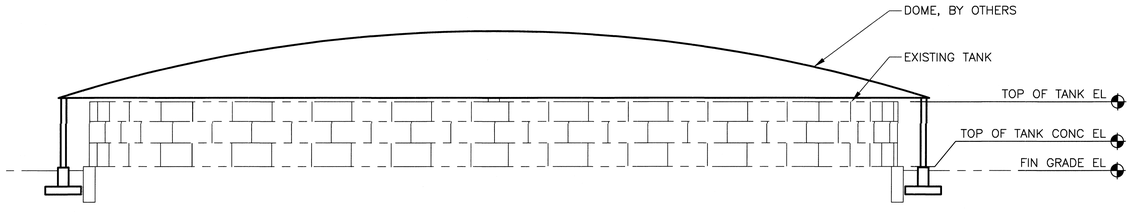

SIDE VIEW

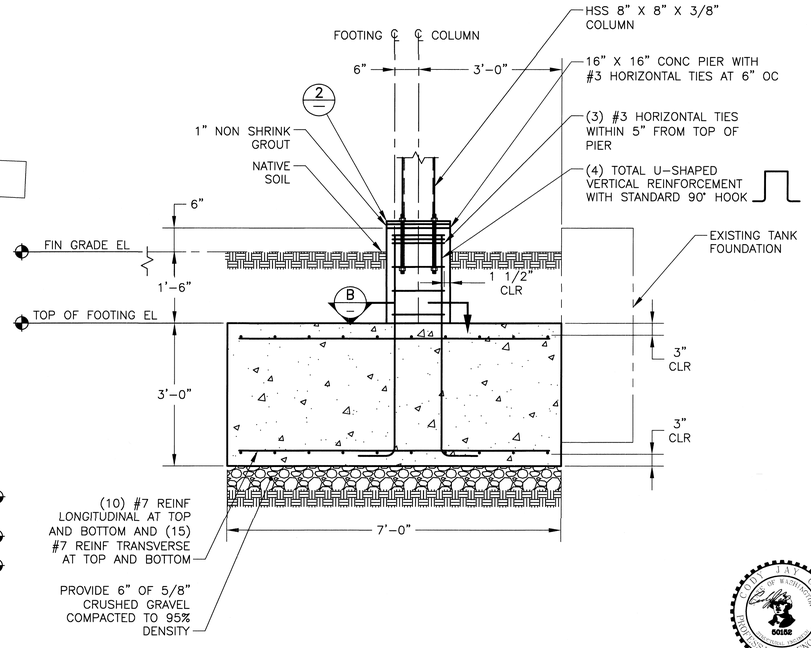

C TANK COVER FOUNDATION
SCALE: 3/4" = 1'-0"

NOTES

1. SEE H-2-837972 SHEET 1 FOR GENERAL NOTES, LEGEND, AND ABBREVIATIONS.
2. (-#'-#") INDICATES TOP OF FOOTING ELEVATIONS RELATIVE TO FINISHED FLOOR AND SHALL BE VERIFIED IN THE FIELD BY THE CONTRACTOR. SEE CIVIL DRAWINGS FOR ACTUAL SLAB ELEVATIONS.
3. SEE H-2-837972 SHEET 1 FOR TYPICAL REBAR LAP SPLICE AND DEVELOPMENT LENGTH DETAIL.
4. SEE SHEET H-2-837974 SHEET 4 FOR TYPICAL REBAR BENDS DETAIL.
5. CONCRETE TANK FOUNDATION IS EXISTING.
6. SEE H-2-837964 SHEET 5 AND SHEET 6 FOR TANK COVER FOUNDATION COORDINATES.
7. REMOVE TANK COVER PER ECR-19-000084 PRIOR TO INSTALLATION OF TANK DOME.

COVER FOUNDATION PLAN

SCALE: 1/8" = 1'-0"

STATE OF WASHINGTON 50152 PROFESSIONAL ENGINEER 8/14/2019

ORIGINAL
Approved for Construction
ISSUED BY
DOCUMENT CONTROL
Date: 9/24/19

DWG NUMBER	TITLE
DRAWING TRACEABILITY LIST	

REF NUMBER	TITLE
REFERENCES	
NEXT USED ON H-2-837964	

REV NO.	MFD	DESCRIPTION
0		INITIAL RELEASE PER DCN-IDF-002

REVISIONS

BLDG. NO. 219A201 219E201

INDEX NO. 0900 0901

CAUTION NOT COMPLETE WITHOUT CURRENT CHANGE DOCUMENTS FROM DATABASE

ATTENTION DESTROY THIS DOCUMENT BY SHREDDING MAY CONTAIN SENSITIVE INFORMATION

	NAME	DATE	COMPANY
DRAWN BY	JM KIENHOLZ	8/14/2019	WDG
DRAFTING APPROVAL	VR DAVISON	8/14/2019	VNSFS
DISCIPLINE ENGINEER	CI COX	8/14/2019	WDG
ENGINEERING CHECKER	DW NELSON	8/14/2019	WDG
DESIGN AUTHORITY	ZP WALTON	9/24/19	CHPRC

U.S. DEPARTMENT OF ENERGY
Richland Operations Office

IDF INFRASTRUCTURE TANK COVER FOUNDATION PLAN

SIZE F | DRAWING NUMBER H-2-837973 | SHEET 1 | REV 0

SCALE SHOWN

PLOTID

DOE_TB_F.DWG (JAN 2012)

CHPRC ENGINEERING CHANGE REQUEST/FACILITY MODIFICATION PACKAGE (ECR/FMP)

ECR No: ECR-18-001801

ECR/FMP Title: IDF Leachate Tank 219A201 and 219E201 Connection

1.0 MODIFICATION DESCRIPTION

Request and Justification:

The leachate tanks for the Integrated Disposal Facility cells are currently separated. Flexibility and redundancy are desired to improve the reliability of the system and permit operations to continue in the event of a tank maintenance restriction or system failure. Therefore, the leachate tanks for the cells will be connected to permit leachate to be pumped from one cell to the opposite tank (e.g., Cell 1 to Tank 2, and Cell 2 to Tank 1).

Work Package No./ Project No.:

TBD

Area:	Facility:	Building:	System ID:
200E	IDF	219A201, 219E201	IDF-LH

RELEASE ☐ Radiological Record

DATE:
Apr 29, 2020

HANFORD RELEASE

☐ Work Complete

☐ Not Approved/Archive Only

Zane Walton		
Design Authority: Print Name	Signature	Date

Change Description and Scope:

H-2-830829, SH. 2, REV. 0

- Add Northing and Easting points for new leachate transfer line (points 510 to 519).
- Add note requiring field verification of northings, eastings, and invert elevations to ensure that leachate transfer lines interface with existing lines and meet minimum sloping requirements.
- Change Operational Designation from “none” to “Support”

H-2-830845, SH. 1, REV. 0

- Add leachate transfer line to existing 3 inch (6 inch encasement) capped leachate line.

H-2-830846, SH. 1, REV. 0 and H-2-803846, SH. 2, Rev. 0 (NEW)

- Add detail 3 for leachate transfer line sumps.
- Remove references to “219E” leachate lines and equipment and survey points; modify sheet 1 so that it presents only the cell 1 equipment, facilities, and supporting information; add new cell 2 drawing depicting leachate transfer lines, survey points, equipment, etc.
- Add leachate transfer line to existing 3 inch “future leachate tank” carrier pipe with 6 inch encasement.
- Modify note 3 to identify 0.5% slope requirement for new leachate transfer lines.
- Remove note 5; edit note 6 to remove reference to cell 2 survey points.
- Add reference to Pipe Trench Detail “D” on H-2-830850 and modify note 11.
- Add note 13 identifying potential interference with existing 1” PVC line and requirement to reroute.
- Add note 14 to reference CHPRC-03953, Construction Specification.

H-2-830850, SH. 2, REV. 0 (NEW)

- Add leachate transfer sump detail.
- Add new trenching detail for new leachate transfer line.

H-2-830851, SH. 1, REV. 0

- Reconfigure piping to connect “future leachate tank” line as represented on sketch and remove note 2.
- Add valves to existing crest pad building inlet line and truck loading facility line.
- Add air release valve and vacuum breaker valve to high point of new leachate transfer line.
- Add note 7 to reference CHPRC-03953 for new leachate lines.
- Add valve numbers and destinations of new and existing transfer lines.

H-2-830852, SH. 1, REV. 0

- Modify truck loading connection in Detail 3 so that it interfaces with leachate transfer trucks.

H-2-830854, SH. 2, REV. 0 & H-2-830854, SH. 4, REV. 1

- Modify existing P&ID to show new leachate transfer line.
- Remove 6” (FUTURE) interfaces.
- Add leachate transfer sumps.

H-2-830872, SH. 1, REV. 0

- Modify truck loading connection structure detail to install pulley and tie-down.
- Change Operational Designation from “none” to “Support”

Approved for Public Release;
Further Dissemination Unlimited

2.0 PACKAGE INDEX

Action	Document No.	Rev. No.	E/S/R	FMP Section Description	FMP Page No.	Release to Work?
RWC	H-2-830829-002	0	S	SKETCH-001	5-6	Yes
RWC	H-2-830845-001	0	S	SKETCH-002	7-8	Yes
RWC	H-2-830846-001	0	S	SKETCH-003	9-10	Yes
NWC	H-2-830846-002	New (0)	S	SKETCH-003	11	Yes
NWC	H-2-830850-002	New (0)	S	SKETCH-004	12	Yes
RWC	H-2-830851-001	0	S	SKETCH-005	13-14	Yes
RWC	H-2-830852-001	0	S	SKETCH-006	15-16	Yes
RWC	H-2-830854-002	0	E	SKETCH-007	17-18	Yes
RWC	H-2-830854-004	1	E	SKETCH-008	19-20	Yes
RWC	H-2-830872-001	0	S	SKETCH-009	21-22	Yes

3.0 DESIGN REQUIREMENTS

Functional Requirements:

Functional design criteria for the Integrated Disposal Facility Detailed Infrastructure Design are documented in CHPRC-03789. For the leachate system, CHPRC-03789, Section 2.4.1, requires "the two existing tanks…be connected through a central leachate collection pipe…The connection pipe will be configured to allow both tanks to either fill simultaneously, allow leachate from Cell 1 and from Cell 2 to be transferred to either tank, and for isolation of a single tank."

Design Criteria:

Design Criteria are based on construction specification RPP-18489, Rev. 1 sections regarding the original leachate handling and transfer lines.

Hazard Analysis/Requirements:

NA

Other Analysis/Requirements:

CHPRC-03955, *Leachate Pipe Loading Calculation* evaluates the pipe to ensure that it will withstand all relevant loading conditions when installed.
CHPRC-03956, *Leachate Hydraulic Calculation* determines the predicted pressures and flows during operation of the leachate system.
CHPRC-03953, *Integrated Disposal Facility (IDF) Detailed Infrastructure Design Construction Specification*, includes leachate system piping, instrumentation, component, and other related specifications for installation of new leachate tank transfer lines.

4.0 ACCEPTANCE CRITERIA and METHODS

Acceptance Criteria	Acceptance Method
Visual Inspection of pipe to confirm pipe is appropriate material, free from damage, and butt fusion joint quality is adequate; refer to CHPRC-03953, Sections 33 05 31.13 and 33 05 33.23	☒ Inspection ☐ Testing
Hydrostatic Leak Test of Carrier Pipe, refer to CHPRC-03953, Section 03 05 05.31	☐ Inspection ☒ Testing
Pneumatic Leak Test of Containment Pipe, refer to CHPRC-03953, Section 03 05 05.31	☐ Inspection ☒ Testing
	☐ Inspection ☐ Testing

5.0 AFFECTED and RELATED ECR/FMPs

Action	ECR/FMP No.	ECR/FMP Title
N/A	N/A	N/A

CHPRC ENGINEERING CHANGE REQUEST/FACILITY MODIFICATION PACKAGE (ECR/FMP)

ECR No: ECR-18-001801

ECR/FMP Title: IDF Leachate Tank 219A201 and 219E201 Connection

6.0 OTHER AFFECTED DOCUMENTS

Document Type	Document No.	Rev. No.	Owning Organization	Technical Authority
Specifications	CHPRC-03953	0	PRC	Zane Walton
Calculation	CHPRC-03955	1	PRC	Zane Walton

7.0 DESIGN VERIFICATION

Verification by: ☒ Peer Review ☐ Formal Design Review ☐ Alternate Calculations ☐ Qualification Testing ☐ Not Required

Design Verification Checklist:

a.	Are the Functional Requirements and Design Criteria appropriately selected for the modification?	☒ Yes	☐ No	☐ NA
b.	Does the design meet the specified Functional Requirements and Design Criteria?	☒ Yes	☐ No	☐ NA
c.	Were the design inputs correctly incorporated into the design?	☒ Yes	☐ No	☐ NA
d.	Is the design output reasonable compared to the design inputs?	☒ Yes	☐ No	☐ NA
e.	Have suitable materials, parts, and processes been specified?	☒ Yes	☐ No	☐ NA
f.	Have suitable acceptance, inspection, and testing criteria been specified?	☒ Yes	☐ No	☐ NA
g.	Have constructability, maintenance, and operability been adequately addressed in the design?	☒ Yes	☐ No	☐ NA
h.	Are all affected design documents identifies and appropriately changed?	☒ Yes	☐ No	☐ NA

Additional Design Verification Documentation Prepared? ☐ Yes ☒ No

NOTE: Identify additional Design Verification Documentation in Section 2.0 Package Index.

A review of the design has been performed. The selected Functional Requirements and Design Criteria meet the stated Engineering Request. Design Verification performed by the method(s) identified has confirmed that the design documented by this FMP is adequate and meets the stated Functional Requirements and Design Criteria.

Design Verifier: Print Name	Signature	Date
Teresa Torres	Teresa Torres	4/22/2020

8.0 REVIEWS

USQ: _____ ☐ USQ ☐ GCX No.: _____ ☒ Not Required

Reviewer: Print Name	Signature	Date
Zane Walton	Zane Walton	4/28/2020

Environmental: SEE EASF ☒ Screened Ref: _____ ☐ Not Required

ECO: Print Name	Signature	Date
Barry Lawrence	B Lawrence	4/28/2020

9.0 APPROVALS and DISTRIBUTION

Approvals

	Print Name	Signature	Date
ECR/FMP Author:	Anthony Frost	Anthony P. Frost	4/21/2020
Design Authority:	Zane Walton	Zane Walton	4/28/2020
Engineering Manager:	Bill Borlaug	W.A. Borlaug	4/29/2020
Title: N/A			
Title:			

A-6004-683 (REV 7)

CHPRC ENGINEERING CHANGE REQUEST/FACILITY MODIFICATION PACKAGE (ECR/FMP)	
ECR No:	ECR-18-001801
ECR/FMP Title:	IDF Leachate Tank 219A201 and 219E201 Connection

Distribution			
HID	**Name**	**HID**	**Name**
0065853	Randy Havenor		
9932249	Paul Branson		

4/21/2020

BERM ACCESS ROAD **

POINT NO.	EASTING	NORTHING	ELEV (NAVD88)	DESCRIPTION
001	–	–	–	NOT USED
002	–	–	–	NOT USED
003	1883820.7	443626.9	729.4	SW AREA BERM, ACCESS RD GRADE CHANGE
004	1883878.7	443623.5	730.66	SW AREA BERM, ACCESS RD GRADE CHANGE
005	1883878.6	443709.5	729.8	SW AREA BERM, ACCESS RD EDGE
006	1883855.0	443723.9	728.8	SW LINER TERMINATION PNT
007	1883840.7	443723.9	728.8	SW AREA, INSIDE EDGE OF BERM
008	1883820.7	444133.4	724.3	TRANSITION FROM 20' WIDE
009	1883810.7	444163.4	723.8	TRANSITION TO 30' WIDE
010	1883840.7	444258.4	723.8	INSIDE EDGE OF ROAD (SURVEY REF)
011	1883845.7	444263.4	723.8	INSIDE EDGE OF ROAD (SURVEY REF)
012	1883810.7	444293.4	723.2	NW CORNER, BERM ACCESS RD
013	1885288.7	444293.4	723.2	NE CORNER, BERM ACCESS RD
014	1885253.7	444263.4	723.8	INSIDE EDGE OF ROAD (SURVEY REF)
015	1885258.7	444258.4	723.8	INSIDE EDGE OF ROAD (SURVEY REF)
016	1885288.7	444163.4	723.8	TRANSITION FROM 30' WIDE
017	1885278.7	444133.4	724.3	TRANISTION TO 20' WIDE
018	1885258.7	443723.9	728.8	SE AREA, INSIDE EDGE OF RD
019	1885244.4	443723.9	728.8	SE LINER TERMINATION PNT
020	1885220.7	443709.5	729.8	SE AREA, ACCESS RD EDGE
021	1885220.7	443510.4	731.8	SE AREA BERM, ACCESS RD GRADE CHANGE
022	1885278.7	443513.9	730.5	SE AREA BERM, ACCESS RD GRADE CHANGE
1001	1883810.7	444226.9	723.2	GRADE BREAK WEST BERM ACCESS ROAD
1002	1883840.7	444226.9	723.8	GRADE BREAK WEST BERM ACCESS ROAD
1003	1883840.7	444163.4	724.4	GRADE BREAK WEST BERM ACCESS ROAD
1004	1883840.7	444133.4	724.7	GRADE BREAK WEST BERM ACCESS ROAD
1005	1883820.7	443723.9	728.4	GRADE BREAK WEST BERM ACCESS ROAD
1006	1885278.7	443723.9	728.4	GRADE BREAK EAST BERM ACCESS ROAD
1007	1885258.7	444133.4	724.7	GRADE BREAK EAST BERM ACCESS ROAD
1008	1885258.7	444163.4	724.4	GRADE BREAK EAST BERM ACCESS ROAD
1009	1885258.7	444226.9	723.8	GRADE BREAK EAST BERM ACCESS ROAD
1010	1885288.7	444226.9	723.2	GRADE BREAK EAST BERM ACCESS ROAD

** SEE NOTE 3

SUBGRADE LANDFILL EXCAVATION

POINT NO.	EASTING	NORTHING	ELEV (NAVD88)	DESCRIPTION
025	1883867.5	443723.9	725.8	SW LINER BENCH CREST PNT
026	1883858.0	443723.9	725.8	SW CORNER LINER BENCH
027	1883867.5	444236.6	720.8	NW LINER BENCH CREST PNT
028	1883858.0	444246.1	720.8	NW LINER BENCH TERMINATION PNT
029	–	–	–	NOT USED
030	–	–	–	NOT USED
031	1885241.4	444246.1	720.8	NE LINER BENCH TERMINATION PNT
032	1885231.9	444236.6	720.8	NE LINER BENCH CREST PNT
033	1885241.4	443723.9	725.8	SE LINER BENCH TERMINATION PNT
034	1885231.9	443723.9	725.8	SE LINER BENCH CREST PNT
035	1885089.9	443723.9	678.5	CELL 2 SE CORNER SUBGRADE BOTTOM
036	1885066.3	443709.5	678.9	EXCAVATION BOTTOM TRANSITION TO SUBGRADE
037	1885066.3	443665.2	679.4	SE CORNER OF EXCAVATION BOTTOM
038	1884967.0	443670.6	676.3	BOTTOM OF CELLS ACCESS RAMP
039	1884979.7	443723.9	676.3	BOTTOM OF CELLS ACCESS RAMP
040	1884819.7	443723.9	673.1	CELL 2 S SUBGRADE BOTTOM
041	1884549.7	443723.9	678.5	CELL 1–CELL 2 S SUBGRADE BOTTOM
042	1884279.7	443723.9	673.1	CELL 1 S SUBGRADE BOTTOM
043	1884009.5	443723.9	678.5	CELL 1 SW CORNER SUBGRADE BOTTOM
044	1884009.5	444098.6	674.8	CELL 1 NW SUBGRADE BOTTOM
045	1884549.7	444098.6	674.8	CELL 1–CELL 2 N SUBGRADE BOTTOM
046	1885089.9	444098.6	674.8	CELL 2 NE SUBGRADE BOTTOM
047	1884819.7	443701.2	684.4	CELLS ACCESS RAMP TRANSITION PNT
048	1884782.9	443673.8	686.0	CELLS ACCESS RAMP TRANSITION PNT **
049	1883999.1	443558.2	725.6	TOP OF CELLS ACCESS RAMP **
050	1884003.4	443528.5	725.0	TOP OF CELLS ACCESS RAMP **
051	1884012.1	443709.5	685.7	EXCAVATION BOTTOM TRANSITION TO SUBGRADE

** SEE NOTE 3

CELL 1 SUMP SUBGRADE

POINT NO.	EASTING	NORTHING	ELEV (NAVD88)	DESCRIPTION
055	1884254.7	444083.9	669.9	NW CORNER, UPPER GRADE OF LCRS SUMP
056	1884269.7	444070.1	665.3	CELL 1 SLDS
057	1884254.7	444033.9	669.9	SW CORNER, UPPER GRADE OF LCRS SUMP
058	1884279.7	444033.9	669.9	S CL EDGE, UPPER GRADE OF LCRS SUMP
059	–	–	–	NOT USED
060	1884304.7	444033.9	669.9	SE CORNER, UPPER GRADE OF LCRS SUMP
061	1884304.7	444083.9	669.9	NE CORNER, UPPER GRADE OF LCRS SUMP
062	1884287.7	444070.1	665.3	CELL 1 SLDS
063	1884289.7	444076.1	665.3	CELL 1 SLDS
064	1884287.7	444076.1	665.3	CELL 1 SLDS
065	1884289.7	444057.6	665.3	CELL 1 SLDS
066	1884269.7	444057.6	665.3	CELL 1 SLDS
067	1884269.7	444077.9	667.8	NW CORNER, LOWER GRADE OF LDS SUMP
068	1884269.7	444057.9	667.8	SW CORNER, LOWER GRADE OF LDS SUMP
069	1884289.7	444057.9	667.8	SE CORNER, LOWER GRADE OF LDS SUMP
070	1884289.7	444077.9	667.8	NE CORNER, LOWER GRADE OF LDS SUMP
071	1884275.3	444077.9	667.8	ENTRANCE CORNER TO LDS RISER TRENCH
072	1884289.7	444070.1	665.3	CELL 1 SLDS
073	1884275.3	444077.6	667.8	SE CORNER OF LDS RISER TRENCH
074	1884269.8	444077.6	667.8	SW CORNER OF LDS RISER TRENCH
075	1884269.8	444236.6	718.8	NW CORNER OF LDS RISER TRENCH
076	1884275.3	444236.6	718.8	NE CORNER OF LDS RISER TRENCH
077	1884302.2	444242.7	720.8	CELL 1 SLDS
078	1884304.1	444242.6	720.8	CELL 1 SLDS

CELL 2 SUMP SUBGRADE

POINT NO.	EASTING	NORTHING	ELEV (NAVD88)	DESCRIPTION
079	1884794.7	444083.9	669.9	NW CORNER, UPPER GRADE OF LCRS SUMP
080	1884809.7	444070.1	665.3	CELL 2 SLDS
081	1884794.7	444033.9	669.9	SW CORNER, UPPER GRADE OF LCRS SUMP
082	1884819.7	444033.9	669.9	S CL EDGE, UPPER GRADE OF LCRS SUMP
083	1884827.7	444070.1	665.3	CELL 2 SLDS
084	1884844.7	444033.9	669.9	SE CORNER, UPPER GRADE OF LCRS SUMP
085	1884844.7	444083.9	669.9	NE CORNER, UPPER GRADE OF LCRS SUMP
086	1884827.7	444076.1	665.3	CELL 2 SLDS
087	1884829.7	444076.1	665.3	CELL 2 SLDS
088	1884829.7	444057.6	665.3	CELL 2 SLDS
089	1884809.7	444057.6	665.3	CELL 2 SLDS
090	–	–	–	NOT USED
091	1884809.8	444077.9	667.8	NW CORNER, LOWER GRADE OF LDS SUMP
092	1884809.7	444057.9	667.8	SW CORNER, LOWER GRADE OF LDS SUMP
093	1884829.7	444057.9	667.8	SE CORNER, LOWER GRADE OF LDS SUMP
094	1884829.7	444077.9	667.8	NE CORNER, LOWER GRADE OF LDS SUMP
095	1884815.3	444077.9	667.8	ENTRANCE CORNER TO LDS RISER TRENCH
096	1884829.7	444070.1	665.3	CELL 2 SLDS
097	1884809.8	444077.6	667.8	SW CORNER OF LDS RISER TRENCH
098	1884815.3	444077.6	667.8	SE CORNER OF LDS RISER TRENCH
099	1884809.8	444236.6	718.8	NW CORNER OF LDS RISER TRENCH
100	1884815.3	444236.6	718.8	NE CORNER OF LDS RISER TRENCH
101	1884842.1	444242.7	720.8	CELL 2 SLDS
102	1884844.1	444242.6	720.8	CELL 2 SLDS

EXCAVATION DRAINAGE CONTROL

POINT NO.	EASTING	NORTHING	ELEV (NAVD88)	DESCRIPTION
103	1884008.3	443682.0	688.0	N BERM CREST, WEST END
104	1884008.3	443679.0	688.0	S BERM CREST, WEST END
105	1884013.2	443687.1	685.5	N TOE OF BERM, WEST END
106	1884014.3	443675.0	686.0	DITCH INVERT, WEST END
107	–	–	–	NOT USED
108	1884514.7	443686.2	685.5	S BERM CREST, EAST END/TOP OF DITCH
109	–	–	–	NOT USED
110	1884770.7	443683.4	682.2	DITCH INVERT, EAST END
111	–	–	–	NOT USED

SOUTH END DRAINAGE CONTROL

POINT NO.	EASTING	NORTHING	ELEV (NAVD88)	DESCRIPTION
117	1883949.7	443492.5	721.8	DITCH INVERT
118	–	–	–	NOT USED
119	–	–	–	NOT USED
120	1884549.7	443492.5	724.8	DITCH INVERT, MATCH EXISTING GRADE
121	1884549.8	443498.5	726.8	S BERM CREST
122	1884549.8	443501.5	726.8	N BERM CREST
123	1884549.9	443507.5	724.3	N TOE OF BERM
124	1885179.7	443492.5	721.6	DITCH INVERT, EAST END
125	1885205.6	443509.4	726.7	CL BERM CREST, EAST END
126	1883999.7	443510.6	727.3	CL BERM CREST, WEST END
127	1885314.2	443438.5	719.0	SW BOTTOM EAST INFILTRATION AREA *
128	1885329.2	443438.5	719.0	SE BOTTOM EAST INFILTRATION AREA *
129	1885329.2	443658.5	719.0	NE BOTTOM EAST INFILTRATION AREA *
130	1885314.2	443658.5	719.0	NW BOTTOM EAST INFILTRATION AREA *

* SEE NOTE 2

LEACHATE FACILITY TRANSFER ROAD

POINT NO.	EASTING	NORTHING	ELEV (NAVD88)	DESCRIPTION
300	1883820.7	444293.4	723.2	CL OF RD, STA 0+00, N EDGE OF BERM ACCESS RD
301	1883820.7	444329.6	722.9	CL OF RD, PC STA 0+36.2
302	1883872.9	444408.0	722.0	CL OF RD, PT STA 1+36.1
303	1883948.5	444439.6	721.0	CL OF RD, PC STA 2+18.0
304	1883981.3	444446.1	721.0	CL OF RD, PT STA 2+51.6
305	1884549.7	444446.1	721.0	CL OF RD, STA 8+20, INTERSECTION OF BERM RAMP
306	1884829.7	444446.1	721.0	CL OF RD, STA 11+00
307	1884958.2	444446.1	720.6	CL OF RD, PT STA 12+28.5, START OF CUL–DE–SAC
308	1885101.0	444446.1	720.0	CL OF RD, PC STA 13+71.3, CUL–DE–SAC
309	1885101.0	444506.1	719.7	CENTER OF CUL–DE–SAC, 70' RD CL RADIUS CONTROL
310	1885041.9	444516.5	720.0	CL OF RD, PRC STA 16+43.7, CUL–DE–SAC
311	1884549.7	444293.4	723.2	CL OF RD, N EDGE OF BERM ACCESS RD AT IDF CL
312	1883905.7	444329.6	–	RD CL, 85' RADIUS CONTROL PNT
313	1883981.3	444361.1	–	RD CL, 85' RADIUS CONTROL PNT
314	1884109.6	444361.1	–	S EDGE OF RD, 75' RADIUS CONTROL PNT
315	1884177.3	444495.1	–	S EDGE OF RD, 75' RADIUS CONTROL PNT
316	1884350.7	444495.1	–	S EDGE OF RD, 75' RADIUS CONTROL PNT
317	1884259.7	444420.1	721.3	EDGE OF PAD, NW CORNER
318	1884259.7	444361.7	721.4	EDGE OF PAD, SW CORNER
319	1884286.0	444351.7	–	S EDGE OF PAD, 10' RADIUS CONTROL PNT
320	1884296.0	444338.4	721.4	SW CORNER, EDGE OF PAD, TURNOUT AREA
321	1884334.0	444338.4	721.0	SE CORNER, EDGE OF PAD, TURNOUT AREA
322	1884344.0	444410.1	–	NE CORNER OF PAD, 10' RADIUS CONTROL PNT
323	1884418.4	444361.1	–	S EDGE OF RD, 75' RADIUS CONTROL PNT
324	1884504.8	444323.4	–	EDGE OF BERM ACCESS RD, 30' RAD CONTROL PNT
325	1884504.8	444406.1	–	SW EDGE OF RD, 30' RAD CONTROL PNT
326	1884594.8	444323.4	–	EDGE OF BERM ACCESS RD, 30 RAD CONTROL PNT
327	1884594.8	444406.1	–	SE EDGE OF RD, 30' RAD CONTROL PNT
328	1884663.4	444361.1	–	S EDGE OF RD, 75' RADIUS CONTROL PNT
329	1884731.1	444495.1	–	S EDGE OF RD, 75' RADIUS CONTROL PNT
330	1884797.6	444420.2	721.3	EDGE OF PAD, NW CORNER
331	1884797.6	444361.8	721.4	EDGE OF PAD, SW CORNER
332	1884824.0	444351.8	–	S EDGE OF PAD, 10' RADIUS CONTROL PNT
333	1884834.0	444338.4	721.4	SW CORNER, EDGE OF PAD, TURNOUT AREA
334	1884872.0	444338.4	721.0	SE CORNER, EDGE OF PAD, TURNOUT AREA
335	1884882.0	444410.2	–	NE CORNER OF PAD, 10' RADIUS CONTROL PNT
336	1884958.1	444361.1	–	S EDGE OF RD, 75' RADIUS CONTROL PNT
337	1884890.7	444495.1	–	S EDGE OF RD, 75' RADIUS CONTROL PNT
338	1884958.2	444531.1	–	N EDGE OF RD, 75' RADIUS CONTROL PNT

CELL 1 LEACHATE HANDLING FACILITIES CONTROL

POINT NO.	EASTING	NORTHING	ELEV (NAVD88)	DESCRIPTION
401	1884268.8	444273.4	SEE NOTE 1	CREST PAD BLDG (219A) NW CORNER OF SLAB
402	1884289.8	444273.4	SEE NOTE 1	CREST PAD BLDG (219A) NE CORNER OF SLAB
403	1884201.2	444358.7	SEE NOTE 1	LEACHATE STORAGE TANK (219A201) CENTER POINT
404	1884264.3	444398.7	SEE NOTE 1	LEACHATE TRANSFER BLDG (219A1) NW CORNER OF SLAB
405	1884276.3	444398.7	SEE NOTE 1	LEACHATE TRANSFER BLDG (219A1) NE CORNER OF SLAB
406	1884246.0	444436.2	SEE NOTE 1	TRUCK LOADING STATION NW CORNER OF SLAB
407	1884296.0	444436.2	SEE NOTE 1	TRUCK LOADING STATION NE CORNER OF SLAB
408	1884263.0	444371.2	SEE NOTE 1	CONBINED SUMP CENTER POINT
409	1884309.8	444273.4	–	SLDS ACCESS PAD, NE CORNER OF SLAB

CELL 2 LEACHATE HANDLING FACILITIES CONTROL

POINT NO.	EASTING	NORTHING	ELEV (NAVD88)	DESCRIPTION
501	1884808.7	444273.4	SEE NOTE 1	CREST PAD BLDG (219E) NW CORNER OF SLAB
502	1884829.7	444273.4	SEE NOTE 1	CREST PAD BLDG (219E) NE CORNER OF SLAB
503	1884741.2	444358.7	SEE NOTE 1	LEACHATE STORAGE TANK (219E201) CENTER POINT
504	1884804.3	444398.7	SEE NOTE 1	LEACHATE TRANSFER BLDG (219E1) NW CORNER OF SLAB
505	1884816.3	444398.7	SEE NOTE 1	LEACHATE TRANSFER BLDG (219E1) NE CORNER OF SLAB
506	1884786.0	444436.2	SEE NOTE 1	TRUCK LOADING STATION NW CORNER OF SLAB
507	1884836.0	444436.2	SEE NOTE 1	TRUCK LOADING STATION NE CORNER OF SLAB
508	1884803.0	444371.2	SEE NOTE 1	CONBINED SUMP CENTER POINT
509	1884849.7	444273.4	–	SLDS ACCESS PAD, NE CORNER OF SLAB

NOTES:

1. SEE STRUCTURAL SECTIONS AND DETAILS FOR ELEVATIONS.
2. ELEVATIONS FOR EAST INFILTRATION AREA ARE FOR FINISHED GRADE. SEE GRADING AND DRAINAGE PLAN DWG H–2–830830 AND SECTION F ON DWG H–2–830835, SHT 1 OF 4.
3. ELEVATIONS SHOWN FOR ACCESS ROAD AND ACCESS RAMP CONTROL POINTS ARE FINISHED GRADE.

GENERAL NOTE:
ACTUAL DIMENSIONS ARE CONSTRUCTED WITHIN SPECIFIED TOLERANCES OF THE DESIGN DIMENSIONS SHOWN.

GENERAL NOTE:
AS–BUILT COORDINATES ARE AVAILABLE IN IDF PROJECT VI FILE #50423, SUPPLEMENT 17.

DWG NO	TITLE
DRAWING TRACEABILITY LIST	

REF NUMBER	TITLE
NEXT USED ON	REFERENCES

REV NO	DESCRIPTION	REV BY DATE	ENGR	COMPANY
3	SCH B AS–BUILTS – TRENCH FCN 100307, 100317, 100321, 100322, 100323, 100324, 100340, 100381, & 100500, ECN 723900 REV 0	5/12/06	E THOMAS	CH2MHill

REVISIONS

NAME	DATE	COMPANY
DRAWN BY D KENDALL		CH2MHill
DFTG APPROVED J DEHNER		CH2MHill
ENGINEER H BAUNE		

U.S. DEPARTMENT OF ENERGY
Office of River Protection

TITLE
IDF
CELLS 1 AND 2
SUBGRADE CONTROL

SIZE	BLDG NO	INDEX NO	DWG NO	REV
D	200E	0110	H–2–830829	0

SCALE 1'=100' EDT 822157 SHEET 2 OF

PLOTID ORP_TB_D [12-02].DWG

BLDG. NO.

INDEX NO.

THIS SPACE RESERVED FOR BUILDING AND INDEX NUMBERS

JAY G. DEHNER STATE OF WASHINGTON 0023455 REGISTERED PROFESSIONAL ENGINEER
EXPIRES 11/01/

CH2MHILL

WAS ECR–18–001801 SKETCH–001 PAGE 5

BERM ACCESS ROAD **

POINT NO.	EASTING	NORTHING	ELEV (NAVD88)	DESCRIPTION
001	–	–	–	NOT USED
002	–	–	–	NOT USED
003	1883820.7	443626.9	729.4	SW AREA BERM, ACCESS RD GRADE CHANGE
004	1883878.7	443623.5	730.66	SW AREA BERM, ACCESS RD GRADE CHANGE
005	1883878.6	443709.5	729.8	SW AREA BERM, ACCESS RD EDGE
006	1883855.0	443723.9	728.8	SW LINER TERMINATION PNT
007	1883840.7	443723.9	728.8	SW AREA, INSIDE EDGE OF BERM
008	1883820.7	444133.4	724.3	TRANSITION FROM 20' WIDE
009	1883810.7	444163.4	723.8	TRANSITION TO 30' WIDE
010	1883840.7	444258.4	723.8	INSIDE EDGE OF ROAD (SURVEY REF)
011	1883845.7	444263.4	723.8	INSIDE EDGE OF ROAD (SURVEY REF)
012	1883810.7	444293.4	723.2	NW CORNER, BERM ACCESS RD
013	1885288.7	444293.4	723.2	NE CORNER, BERM ACCESS RD
014	1885253.7	444263.4	723.8	INSIDE EDGE OF ROAD (SURVEY REF)
015	1885258.7	444258.4	723.8	INSIDE EDGE OF ROAD (SURVEY REF)
016	1885288.7	444163.4	723.8	TRANSITION FROM 30' WIDE
017	1885278.7	444133.4	724.3	TRANISTION TO 20' WIDE
018	1885258.7	443723.9	728.8	SE AREA, INSIDE EDGE OF RD
019	1885244.4	443723.9	728.8	SE LINER TERMINATION PNT
020	1885220.7	443709.5	729.8	SE AREA, ACCESS RD EDGE
021	1885220.7	443510.4	731.8	SE AREA BERM, ACCESS RD GRADE CHANGE
022	1885278.7	443513.9	730.5	SE AREA BERM, ACCESS RD GRADE CHANGE
1001	1883810.7	444226.9	723.2	GRADE BREAK WEST BERM ACCESS ROAD
1002	1883840.7	444226.9	723.8	GRADE BREAK WEST BERM ACCESS ROAD
1003	1883840.7	444163.4	724.4	GRADE BREAK WEST BERM ACCESS ROAD
1004	1883840.7	444133.4	724.7	GRADE BREAK WEST BERM ACCESS ROAD
1005	1883820.7	443723.9	728.4	GRADE BREAK WEST BERM ACCESS ROAD
1006	1885278.7	443723.9	728.4	GRADE BREAK EAST BERM ACCESS ROAD
1007	1885258.7	444133.4	724.7	GRADE BREAK EAST BERM ACCESS ROAD
1008	1885258.7	444163.4	724.4	GRADE BREAK EAST BERM ACCESS ROAD
1009	1885258.7	444226.9	723.8	GRADE BREAK EAST BERM ACCESS ROAD
1010	1885288.7	444226.9	723.2	GRADE BREAK EAST BERM ACCESS ROAD

** SEE NOTE 3

SUBGRADE LANDFILL EXCAVATION

POINT NO.	EASTING	NORTHING	ELEV (NAVD88)	DESCRIPTION
025	1883867.5	443723.9	725.8	SW LINER BENCH CREST PNT
026	1883858.0	443723.9	725.8	SW CORNER LINER BENCH
027	1883867.5	444236.6	720.8	NW LINER BENCH CREST PNT
028	1883858.0	444246.1	720.8	NW LINER BENCH TERMINATION PNT
029	–	–	–	NOT USED
030	–	–	–	NOT USED
031	1885241.4	444246.1	720.8	NE LINER BENCH TERMINATION PNT
032	1885231.9	444236.6	720.8	NE LINER BENCH CREST PNT
033	1885241.4	443723.9	725.8	SE LINER BENCH TERMINATION PNT
034	1885231.9	443723.9	725.8	SE LINER BENCH CREST PNT
035	1885089.9	443723.9	678.5	CELL 2 SE CORNER SUBGRADE BOTTOM
036	1885066.3	443709.5	678.9	EXCAVATION BOTTOM TRANSITION TO SUBGRADE
037	1885066.3	443665.2	679.4	SE CORNER OF EXCAVATION BOTTOM
038	1884967.0	443670.6	676.3	BOTTOM OF CELLS ACCESS RAMP
039	1884979.7	443723.9	676.3	BOTTOM OF CELLS ACCESS RAMP
040	1884819.7	443723.9	673.1	CELL 2 S SUBGRADE BOTTOM
041	1884549.7	443723.9	678.5	CELL 1–CELL 2 S SUBGRADE BOTTOM
042	1884279.7	443723.9	673.1	CELL 1 S SUBGRADE BOTTOM
043	1884009.5	443723.9	678.5	CELL 1 SW CORNER SUBGRADE BOTTOM
044	1884009.5	444098.6	674.8	CELL 1 NW SUBGRADE BOTTOM
045	1884549.7	444098.6	674.8	CELL 1–CELL 2 N SUBGRADE BOTTOM
046	1885089.9	444098.6	674.8	CELL 2 NE SUBGRADE BOTTOM
047	1884819.7	443701.2	684.4	CELLS ACCESS RAMP TRANSITION PNT
048	1884782.9	443673.8	686.0	CELLS ACCESS RAMP TRANSITION PNT **
049	1883999.1	443558.2	725.6	TOP OF CELLS ACCESS RAMP **
050	1884003.4	443528.5	725.0	TOP OF CELLS ACCESS RAMP **
051	1884012.1	443709.5	685.7	EXCAVATION BOTTOM TRANSITION TO SUBGRADE

** SEE NOTE 3

CELL 1 SUMP SUBGRADE

POINT NO.	EASTING	NORTHING	ELEV (NAVD88)	DESCRIPTION
055	1884254.7	444083.9	669.9	NW CORNER, UPPER GRADE OF LCRS SUMP
056	1884269.7	444070.1	665.3	CELL 1 SLDS
057	1884254.7	444033.9	669.9	SW CORNER, UPPER GRADE OF LCRS SUMP
058	1884279.7	444033.9	669.9	S CL EDGE, UPPER GRADE OF LCRS SUMP
059	–	–	–	NOT USED
060	1884304.7	444033.9	669.9	SE CORNER, UPPER GRADE OF LCRS SUMP
061	1884304.7	444083.9	669.9	NE CORNER, UPPER GRADE OF LCRS SUMP
062	1884287.7	444070.1	665.3	CELL 1 SLDS
063	1884289.7	444076.1	665.3	CELL 1 SLDS
064	1884287.7	444076.1	665.3	CELL 1 SLDS
065	1884289.7	444057.6	665.3	CELL 1 SLDS
066	1884269.7	444057.6	665.3	CELL 1 SLDS
067	1884269.7	444077.9	667.8	NW CORNER, LOWER GRADE OF LDS SUMP
068	1884269.7	444057.9	667.8	SW CORNER, LOWER GRADE OF LDS SUMP
069	1884289.7	444057.9	667.8	SE CORNER, LOWER GRADE OF LDS SUMP
070	1884289.7	444077.9	667.8	NE CORNER, LOWER GRADE OF LDS SUMP
071	1884275.3	444077.9	667.8	ENTRANCE CORNER TO LDS RISER TRENCH
072	1884289.7	444070.1	665.3	CELL 1 SLDS
073	1884275.3	444077.6	667.8	SE CORNER OF LDS RISER TRENCH
074	1884269.8	444077.6	667.8	SW CORNER OF LDS RISER TRENCH
075	1884269.8	444236.6	718.8	NW CORNER OF LDS RISER TRENCH
076	1884275.3	444236.6	718.8	NE CORNER OF LDS RISER TRENCH
077	1884302.2	444242.7	720.8	CELL 1 SLDS
078	1884304.1	444242.6	720.8	CELL 1 SLDS

CELL 2 SUMP SUBGRADE

POINT NO.	EASTING	NORTHING	ELEV (NAVD88)	DESCRIPTION
079	1884794.7	444083.9	669.9	NW CORNER, UPPER GRADE OF LCRS SUMP
080	1884809.7	444070.1	665.3	CELL 2 SLDS
081	1884794.7	444033.9	669.9	SW CORNER, UPPER GRADE OF LCRS SUMP
082	1884819.7	444033.9	669.9	S CL EDGE, UPPER GRADE OF LCRS SUMP
083	1884827.7	444070.1	665.3	CELL 2 SLDS
084	1884844.7	444033.9	669.9	SE CORNER, UPPER GRADE OF LCRS SUMP
085	1884844.7	444083.9	669.9	NE CORNER, UPPER GRADE OF LCRS SUMP
086	1884827.7	444076.1	665.3	CELL 2 SLDS
087	1884829.7	444076.1	665.3	CELL 2 SLDS
088	1884829.7	444057.6	665.3	CELL 2 SLDS
089	1884809.7	444057.6	665.3	CELL 2 SLDS
090	–	–	–	NOT USED
091	1884809.8	444077.9	667.8	NW CORNER, LOWER GRADE OF LDS SUMP
092	1884809.7	444057.9	667.8	SW CORNER, LOWER GRADE OF LDS SUMP
093	1884829.7	444057.9	667.8	SE CORNER, LOWER GRADE OF LDS SUMP
094	1884829.7	444077.9	667.8	NE CORNER, LOWER GRADE OF LDS SUMP
095	1884815.3	444077.9	667.8	ENTRANCE CORNER TO LDS RISER TRENCH
096	1884829.7	444070.1	665.3	CELL 2 SLDS
097	1884809.8	444077.6	667.8	SW CORNER OF LDS RISER TRENCH
098	1884815.3	444077.6	667.8	SE CORNER OF LDS RISER TRENCH
099	1884809.8	444236.6	718.8	NW CORNER OF LDS RISER TRENCH
100	1884815.3	444236.6	718.8	NE CORNER OF LDS RISER TRENCH
101	1884842.1	444242.7	720.8	CELL 2 SLDS
102	1884844.1	444242.6	720.8	CELL 2 SLDS

EXCAVATION DRAINAGE CONTROL

POINT NO.	EASTING	NORTHING	ELEV (NAVD88)	DESCRIPTION
103	1884008.3	443682.0	688.0	N BERM CREST, WEST END
104	1884008.3	443679.0	688.0	S BERM CREST, WEST END
105	1884013.2	443687.1	685.5	N TOE OF BERM, WEST END
106	1884014.3	443675.0	686.0	DITCH INVERT, WEST END
107	–	–	–	NOT USED
108	1884514.7	443686.2	685.5	S BERM CREST, EAST END/TOP OF DITCH
109	–	–	–	NOT USED
110	1884770.7	443683.4	682.2	DITCH INVERT, EAST END
111	–	–	–	NOT USED

SOUTH END DRAINAGE CONTROL

POINT NO.	EASTING	NORTHING	ELEV (NAVD88)	DESCRIPTION
117	1883949.7	443492.5	721.8	DITCH INVERT
118	–	–	–	NOT USED
119	–	–	–	NOT USED
120	1884549.7	443492.5	724.8	DITCH INVERT, MATCH EXISTING GRADE
121	1884549.8	443498.5	726.8	S BERM CREST
122	1884549.8	443501.5	726.8	N BERM CREST
123	1884549.9	443507.5	724.3	N TOE OF BERM
124	1885179.7	443492.5	721.6	DITCH INVERT, EAST END
125	1885205.6	443509.4	726.7	CL BERM CREST, EAST END
126	1883999.7	443510.6	727.3	CL BERM CREST, WEST END
127	1885314.2	443438.5	719.0	SW BOTTOM EAST INFILTRATION AREA *
128	1885329.2	443438.5	719.0	SE BOTTOM EAST INFILTRATION AREA *
129	1885329.2	443658.5	719.0	NE BOTTOM EAST INFILTRATION AREA *
130	1885314.2	443658.5	719.0	NW BOTTOM EAST INFILTRATION AREA *

* SEE NOTE 2

NOTES:

1. SEE STRUCTURAL SECTIONS AND DETAILS FOR ELEVATIONS.
2. ELEVATIONS FOR EAST INFILTRATION AREA ARE FOR FINISHED GRADE. SEE GRADING AND DRAINAGE PLAN DWG H-2-830830 AND SECTION F ON DWG H-2-830835, SHT 1 OF 4.
3. ELEVATIONS SHOWN FOR ACCESS ROAD AND ACCESS RAMP CONTROL POINTS ARE FINISHED GRADE.

4 FIELD VERIFY NORTHINGS AND EASTINGS TO MATCH WITH EXISTING 3" BURIED LEACHATE LINES WITH 6" CONTAINMENT. ADJUST NORTHINGS FOR POINTS 511 TO MATCH 510 AND NORTHINGS FOR POINTS 515 THROUGH 518 TO MATCH 519, AS NEEDED.

5 FIELD VERIFY INVERT ELEVATIONS TO ENSURE PIPE WILL MEET 0.5% SLOPE REQUIREMENTS.

GENERAL NOTE:
ACTUAL DIMENSIONS ARE CONSTRUCTED WITHIN SPECIFIED TOLERANCES OF THE DESIGN DIMENSIONS SHOWN.

GENERAL NOTE:
AS-BUILT COORDINATES ARE AVAILABLE IN IDF PROJECT VI FILE #50423, SUPPLEMENT 17.

LEACHATE FACILITY TRANSFER ROAD

POINT NO.	EASTING	NORTHING	ELEV (NAVD88)	DESCRIPTION
300	1883820.7	444293.4	723.2	CL OF RD, STA 0+00, N EDGE OF BERM ACCESS RD
301	1883820.7	444329.6	722.9	CL OF RD, PC STA 0+36.2
302	1883872.9	444408.0	722.0	CL OF RD, PT STA 1+36.1
303	1883948.5	444439.6	721.0	CL OF RD, PC STA 2+18.0
304	1883981.3	444446.1	721.0	CL OF RD, PT STA 2+51.6
305	1884549.7	444446.1	721.0	CL OF RD, STA 8+20, INTERSECTION OF BERM RAMP
306	1884829.7	444446.1	721.0	CL OF RD, STA 11+00
307	1884958.2	444446.1	720.6	CL OF RD, PT STA 12+28.5, START OF CUL-DE-SAC
308	1885101.0	444446.1	720.0	CL OF RD, PC STA 13+71.3, CUL-DE-SAC
309	1885101.0	444506.1	719.7	CENTER OF CUL-DE-SAC, 70' RD CL RADIUS CONTROL
310	1885041.9	444516.5	720.0	CL OF RD, PRC STA 16+43.7, CUL-DE-SAC
311	1884549.7	444293.4	723.2	CL OF RD, N EDGE OF BERM ACCESS RD AT IDF CL
312	1883905.7	444329.6	–	RD CL, 85' RADIUS CONTROL PNT
313	1883981.3	444361.1	–	RD CL, 85' RADIUS CONTROL PNT
314	1884109.6	444361.1	–	S EDGE OF RD, 75' RADIUS CONTROL PNT
315	1884177.3	444495.1	–	S EDGE OF RD, 75' RADIUS CONTROL PNT
316	1884350.7	444495.1	–	S EDGE OF RD, 75' RADIUS CONTROL PNT
317	1884259.7	444420.1	721.3	EDGE OF PAD, NW CORNER
318	1884259.7	444361.7	721.4	EDGE OF PAD, SW CORNER
319	1884286.0	444351.7	–	S EDGE OF PAD, 10' RADIUS CONTROL PNT
320	1884296.0	444338.4	721.4	SW CORNER, EDGE OF PAD, TURNOUT AREA
321	1884334.0	444338.4	721.0	SE CORNER, EDGE OF PAD, TURNOUT AREA
322	1884344.0	444410.1	–	NE CORNER OF PAD, 10' RADIUS CONTROL PNT
323	1884418.4	444361.1	–	S EDGE OF RD, 75' RADIUS CONTROL PNT
324	1884504.8	444323.4	–	EDGE OF BERM ACCESS RD, 30' RAD CONTROL PNT
325	1884504.8	444406.1	–	SW EDGE OF RD, 30' RAD CONTROL PNT
326	1884594.8	444323.4	–	EDGE OF BERM ACCESS RD, 30 RAD CONTROL PNT
327	1884594.8	444406.1	–	SE EDGE OF RD, 30' RAD CONTROL PNT
328	1884663.4	444361.1	–	S EDGE OF RD, 75' RADIUS CONTROL PNT
329	1884731.1	444495.1	–	S EDGE OF RD, 75' RADIUS CONTROL PNT
330	1884797.6	444420.2	721.3	EDGE OF PAD, NW CORNER
331	1884797.6	444361.8	721.4	EDGE OF PAD, SW CORNER
332	1884824.0	444351.8	–	S EDGE OF PAD, 10' RADIUS CONTROL PNT
333	1884834.0	444338.4	721.4	SW CORNER, EDGE OF PAD, TURNOUT AREA
334	1884872.0	444338.4	721.0	SE CORNER, EDGE OF PAD, TURNOUT AREA
335	1884882.0	444410.2	–	NE CORNER OF PAD, 10' RADIUS CONTROL PNT
336	1884958.1	444361.1	–	S EDGE OF RD, 75' RADIUS CONTROL PNT
337	1884890.7	444495.1	–	S EDGE OF RD, 75' RADIUS CONTROL PNT
338	1884958.2	444531.1	–	N EDGE OF RD, 75' RADIUS CONTROL PNT

CELL 1 LEACHATE HANDLING FACILITIES CONTROL

POINT NO.	EASTING	NORTHING	ELEV (NAVD88)	DESCRIPTION
401	1884268.8	444273.4	SEE NOTE 1	CREST PAD BLDG (219A) NW CORNER OF SLAB
402	1884289.8	444273.4	SEE NOTE 1	CREST PAD BLDG (219A) NE CORNER OF SLAB
403	1884201.2	444358.7	SEE NOTE 1	LEACHATE STORAGE TANK (219A201) CENTER POINT
404	1884264.3	444398.7	SEE NOTE 1	LEACHATE TRANSFER BLDG (219A1) NW CORNER OF SLAB
405	1884276.3	444398.7	SEE NOTE 1	LEACHATE TRANSFER BLDG (219A1) NE CORNER OF SLAB
406	1884246.0	444436.2	SEE NOTE 1	TRUCK LOADING STATION NW CORNER OF SLAB
407	1884296.0	444436.2	SEE NOTE 1	TRUCK LOADING STATION NE CORNER OF SLAB
408	1884263.0	444371.2	SEE NOTE 1	CONBINED SUMP CENTER POINT
409	1884309.8	444273.4	–	SLDS ACCESS PAD, NE CORNER OF SLAB

CELL 2 LEACHATE HANDLING FACILITIES CONTROL

POINT NO.	EASTING	NORTHING	ELEV (NAVD88)	DESCRIPTION
501	1884808.7	444273.4	SEE NOTE 1	CREST PAD BLDG (219E) NW CORNER OF SLAB
502	1884829.7	444273.4	SEE NOTE 1	CREST PAD BLDG (219E) NE CORNER OF SLAB
503	1884741.2	444358.7	SEE NOTE 1	LEACHATE STORAGE TANK (219E201) CENTER POINT
504	1884804.3	444398.7	SEE NOTE 1	LEACHATE TRANSFER BLDG (219E1) NW CORNER OF SLAB
505	1884816.3	444398.7	SEE NOTE 1	LEACHATE TRANSFER BLDG (219E1) NE CORNER OF SLAB
506	1884786.0	444436.2	SEE NOTE 1	TRUCK LOADING STATION NW CORNER OF SLAB
507	1884836.0	444436.2	SEE NOTE 1	TRUCK LOADING STATION NE CORNER OF SLAB
508	1884803.0	444371.2	SEE NOTE 1	CONBINED SUMP CENTER POINT
509	1884849.7	444273.4	–	SLDS ACCESS PAD, NE CORNER OF SLAB
510	1884826.3	444395.1	715.6 IE	LEACHATE TRANSFER 052 TIE-IN AT 219E AND LTS-4
511	1884853.1	444395.1	715.7 IE	LEACHATE TRANSFER 052 90° (NORTH)
512	1884853.1	444446.7	716.0 IE	LEACHATE TRANSFER 052 90° (WEST)
513	1884821.6	444446.7	716.1 IE	LEACHATE TRANSFER 052 EAST HIGH POINT
514	1884738.8	444446.7	715.7 IE	LEACHATE TRANSFER 052 45° (SOUTHWEST)
515	1884666.2	444395.1	715.3 IE	LEACHATE TRANSFER 052 45° (WEST)
516	1884622.1	444395.1	714.9 IE	LEACHATE TRANSFER SUMP TIE-IN AT LTS-3 (LOW POINT)
517	1884612.1	444395.1	715.0 IE	LEACHATE TRANSFER SUMP TIE-IN AT LTS-2
518	1884449.2	444395.1	715.9 IE	LEACHATE TRANSFER 052 WEST HIGH POINT
519	1884286.3	444395.1	715.0 IE	LEACHATE TRANSFER 052 TIE-IN AT 219A AND LTS-1

BLDG. NO.

INDEX NO.

THIS SPACE RESERVED FOR BUILDING AND INDEX NUMBERS

DRAWING TRACEABILITY LIST			
DWG NO	TITLE	REF NUMBER	TITLE
		REFERENCES	
		NEXT USED ON	

REVISIONS					
REV Rel	MFD	REV NO	DESCRIPTION	REV BY DATE	ENGR COMPANY
		1	REVISED PER ECR-18-001801		
		0	SCH B AS-BUILTS – TRENCH, FCN 100307, 100317, 100321, 100322, 100323, 100324, 100340, 100381, & 100500, ECN 723900 REV 0	5/12/06	E THOMAS CH2Mhill

NAME	DATE	COMPANY
DRAWN BY D KENDALL		CH2MHill
DFTG APPROVED J DEHNER		CH2MHill
ENGINEER H BAUNE		

U.S. DEPARTMENT OF ENERGY
Office of River Protection

TITLE IDF CELLS 1 AND 2 SUBGRADE CONTROL

SIZE	BLDG NO	INDEX NO	DWG NO	REV
D	200E	0110	H-2-830829	1
SCALE 1'=100'	EDT 822157		SHEET 2 OF	

PLOTID ORP_TB_D (12-02).DWG

PAGE 6 SKETCH-001

IS ECR-18-001801

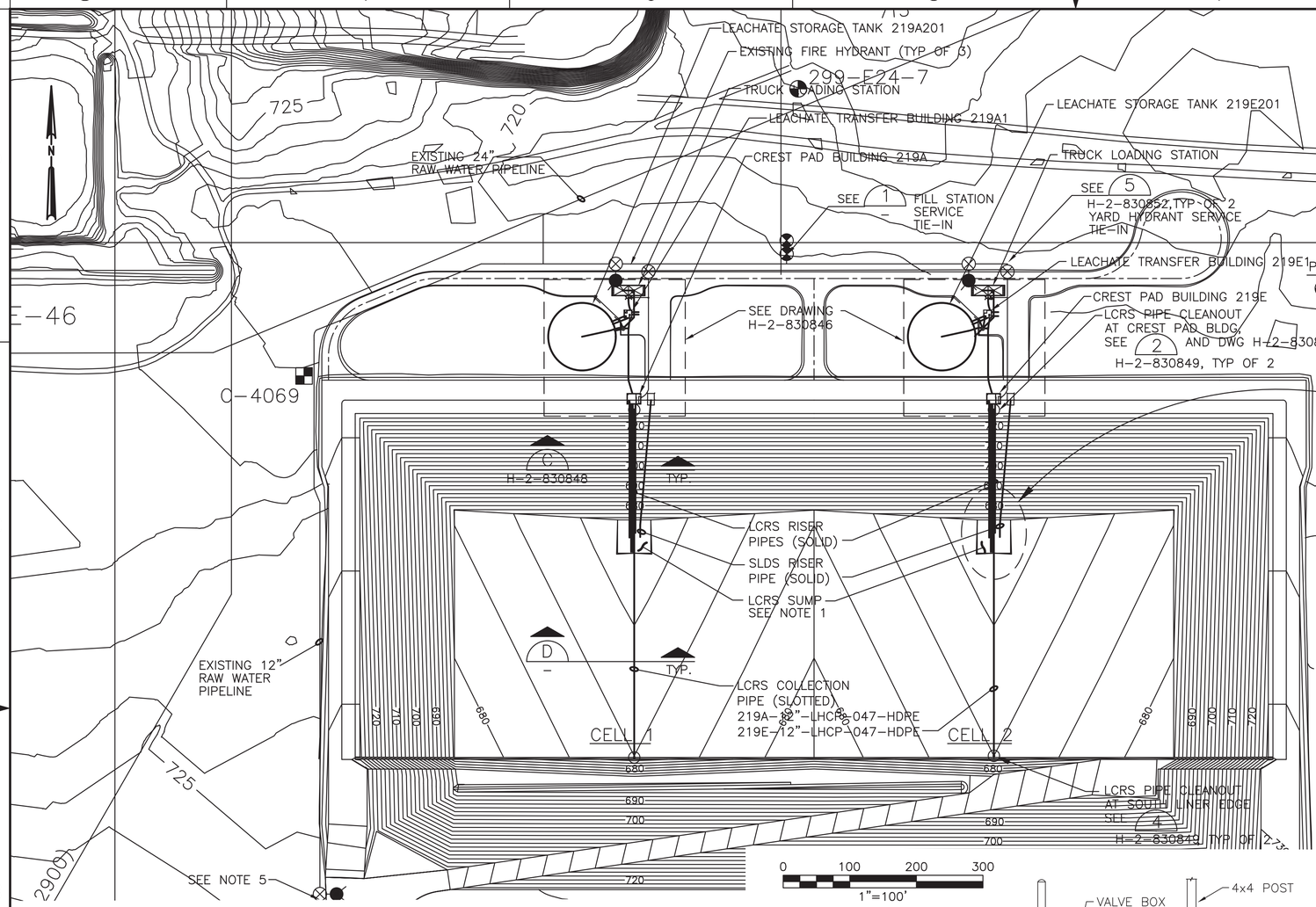

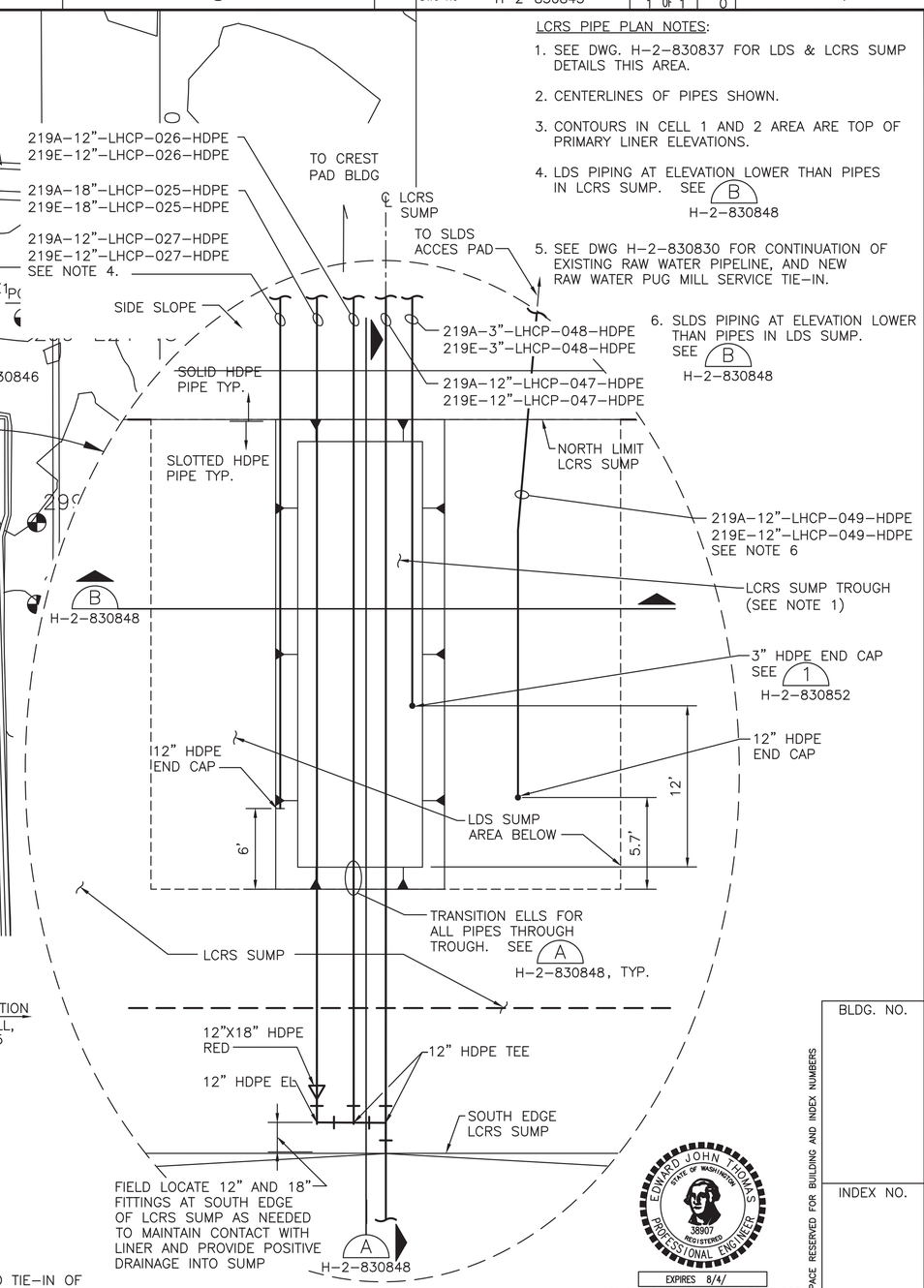

LCRS PIPE PLAN NOTES:

1. SEE DWG. H-2-830837 FOR LDS & LCRS SUMP DETAILS THIS AREA.
2. CENTERLINES OF PIPES SHOWN.
3. CONTOURS IN CELL 1 AND 2 AREA ARE TOP OF PRIMARY LINER ELEVATIONS.
4. LDS PIPING AT ELEVATION LOWER THAN PIPES IN LCRS SUMP. SEE B H-2-830848
5. SEE DWG H-2-830830 FOR CONTINUATION OF EXISTING RAW WATER PIPELINE, AND NEW RAW WATER PUG MILL SERVICE TIE-IN.
6. SLDS PIPING AT ELEVATION LOWER THAN PIPES IN LDS SUMP. SEE B H-2-830848

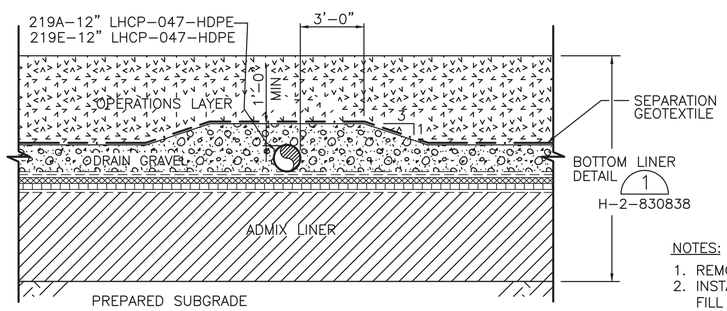

NOTES:

1. OPERATIONS LAYER THICKNESS VARIES ACROSS CELL BOTTOM WITH A 3-FOOT MIN. THICKNESS.

LCRS COLLECTION PIPE D
NTS H-2-830849

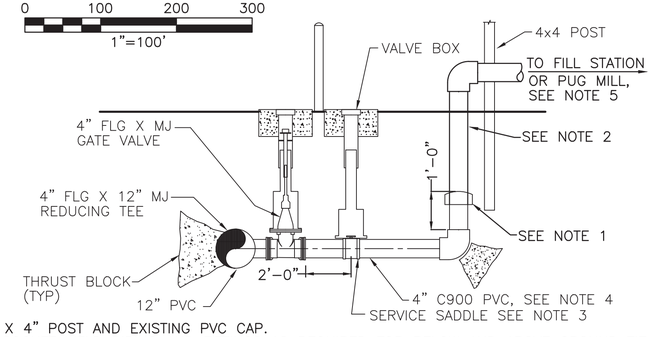

NOTES:

1. REMOVE 4" X 4" POST AND EXISTING PVC CAP.
2. INSTALL 4" SOCKET WELD PIPING AND FITTINGS AS REQUIRED FOR BELOW AND ABOVE GROUND TIE-IN OF FILL STATION AND PUG MILL.
3. 1" DRAIN VALVE, 1" DIA X 12" LONG GSP, AND 2 CUBIC FEET OF DRAIN GRAVEL NOT SHOWN FOR CLARITY.
4. EXISTING 4" C900 PVC IS APPROXIMATELY 200' LONG FOR PUG MILL SERVICE AND APPROXIMATELY 10' LONG FOR FILL STATION SERVICE.
5. COORDINATE WITH CONSTRUCTION MANAGER FOR REQD DEMOLITION OF ABOVE GROUND PIPING AND RE-CAPPING OF BURIED PIPING AFTER PROJECT COMPLETION.

FILL STATION/PUG MILL TIE-IN 1
NTS H-2-830830

TYPICAL LCRS/LDS SUMP PIPING SCHEMATIC CELLS 1 & 2
NTS

EDWARD JOHN THOMAS STATE OF WASHINGTON 38907 REGISTERED PROFESSIONAL ENGINEER
EXPIRES 8/4/
MY STAMP & SEAL APPLY TO THOSE CHANGES MADE IN REVISION 0. THE ORIGINAL DESIGN WAS NOT PREPARED UNDER MY DIRECTION.
CH2MHILL

THIS SPACE RESERVED FOR BUILDING AND INDEX NUMBERS
BLDG. NO.
INDEX NO.

DWG NO	TITLE	REF NUMBER	TITLE
DRAWING TRACEABILITY LIST		NEXT USED ON	REFERENCES

REV NO	DESCRIPTION	REV BY DATE	ENGR COMPANY
0	SCH B AS-BUILTS FCN 100531 & 100542, ECN 723902 REV 0	5/12/06	E THOMAS CH2Mhill

REVISIONS

NAME	DATE	COMPANY
DRAWN BY D KENDALL		CH2MHill
DFTG APPROVED E THOMAS		CH2MHill
ENGINEER H BAUNE		

U.S. DEPARTMENT OF ENERGY
Office of River Protection

TITLE IDF LEACHATE COLLECTION PIPING PLAN

SIZE	BLDG NO	INDEX NO	DWG NO	REV
D	200E	8500	H-2-830845	0

SCALE AS SHOWN EDT 822180 SHEET 1 OF 1

PLOTID ORP_TB_D [12-02].DWG

WAS ECR-18-001801 PAGE 7 SKETCH-002

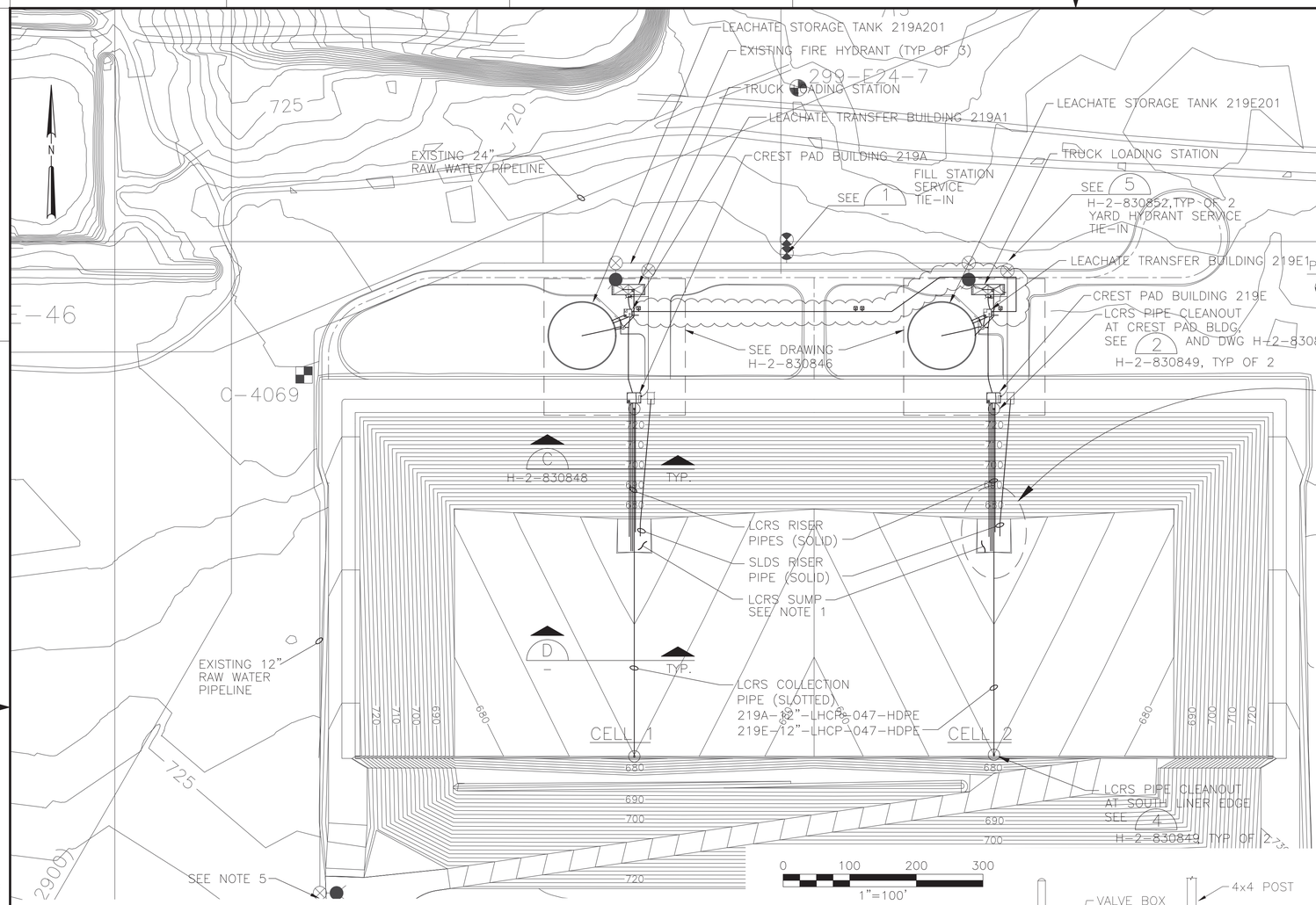

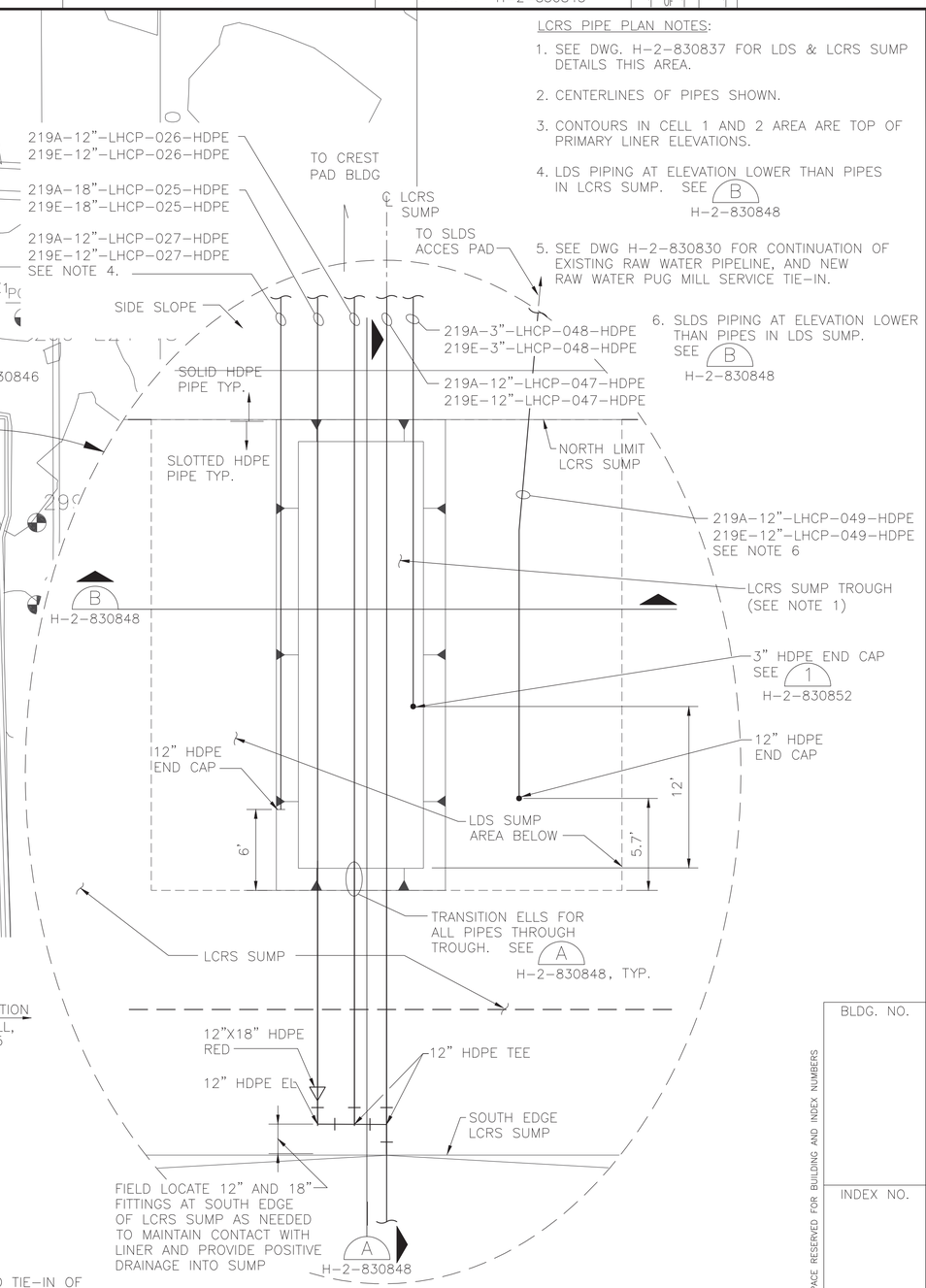

LCRS PIPE PLAN NOTES:

1. SEE DWG. H-2-830837 FOR LDS & LCRS SUMP DETAILS THIS AREA.
2. CENTERLINES OF PIPES SHOWN.
3. CONTOURS IN CELL 1 AND 2 AREA ARE TOP OF PRIMARY LINER ELEVATIONS.
4. LDS PIPING AT ELEVATION LOWER THAN PIPES IN LCRS SUMP. SEE B H-2-830848
5. SEE DWG H-2-830830 FOR CONTINUATION OF EXISTING RAW WATER PIPELINE, AND NEW RAW WATER PUG MILL SERVICE TIE-IN.
6. SLDS PIPING AT ELEVATION LOWER THAN PIPES IN LDS SUMP. SEE B H-2-830848

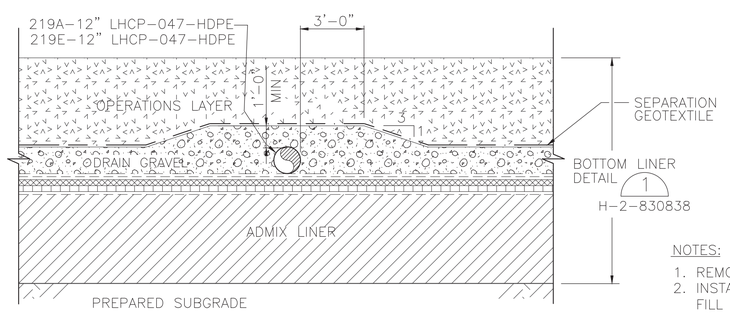

NOTES:

1. OPERATIONS LAYER THICKNESS VARIES ACROSS CELL BOTTOM WITH A 3-FOOT MIN. THICKNESS.

LCRS COLLECTION PIPE D
NTS H-2-830849

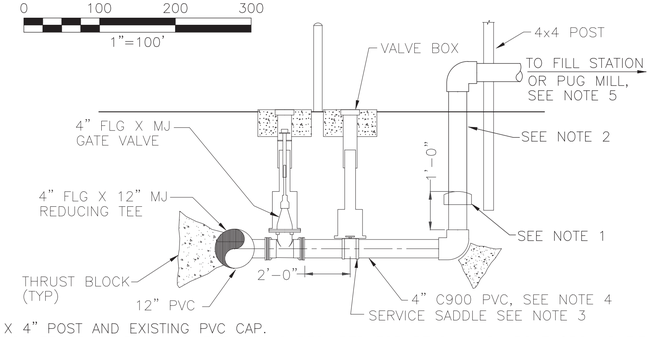

NOTES:

1. REMOVE 4" X 4" POST AND EXISTING PVC CAP.
2. INSTALL 4" SOCKET WELD PIPING AND FITTINGS AS REQUIRED FOR BELOW AND ABOVE GROUND TIE-IN OF FILL STATION AND PUG MILL.
3. 1" DRAIN VALVE, 1" DIA X 12" LONG GSP, AND 2 CUBIC FEET OF DRAIN GRAVEL NOT SHOWN FOR CLARITY.
4. EXISTING 4" C900 PVC IS APPROXIMATELY 200' LONG FOR PUG MILL SERVICE AND APPROXIMATELY 10' LONG FOR FILL STATION SERVICE.
5. COORDINATE WITH CONSTRUCTION MANAGER FOR REQD DEMOLITION OF ABOVE GROUND PIPING AND RE-CAPPING OF BURIED PIPING AFTER PROJECT COMPLETION.

FILL STATION/PUG MILL TIE-IN 1
NTS H-2-830830

TYPICAL LCRS/LDS SUMP PIPING SCHEMATIC CELLS 1 & 2
NTS

DWG NO	TITLE	REF NUMBER	TITLE
DRAWING TRACEABILITY LIST		REFERENCES	
		NEXT USED ON	

REV Rel	MFD	REV NO	DESCRIPTION	REV BY DATE	ENGR	COMPANY
		1	REVISED PER ECR-18-001801			
		0	SCH B AS-BUILTS FCN 100531 & 100542, ECN 723902 REV 0	5/12/06	E THOMAS	CH2MHill

REVISIONS

NAME	DATE	COMPANY
DRAWN BY D. KENDALL		CH2MHill
DTG APPROVED E. THOMAS		CH2MHill
ENGINEER R. BAUNE		

U.S. DEPARTMENT OF ENERGY
Office of River Protection

TITLE: IDF LEACHATE COLLECTION PIPING PLAN

SIZE	BLDG NO	INDEX NO	DWG NO	REV
D	200E	8500	H-2-830845	1

SCALE AS SHOWN EDT 822180 SHEET 1 OF 1

PLOTID ORP_TB_D (12-02).DWG

BLDG. NO.

INDEX NO.

THIS SPACE RESERVED FOR BUILDING AND INDEX NUMBERS

PAGE 8 SKETCH-002

IS ECR-18-001801

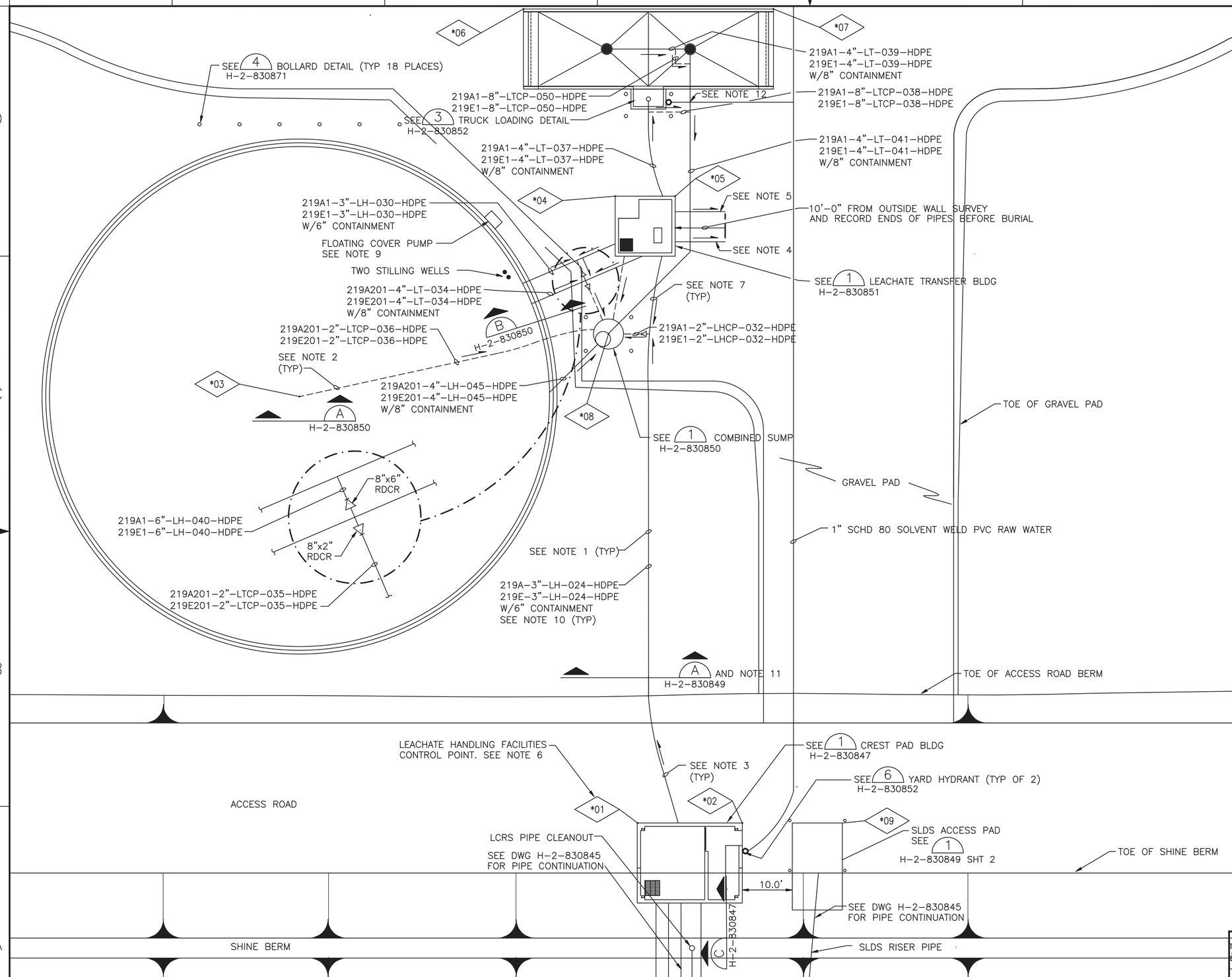

NOTES:

1. PIPES SHOWN AS SOLID LINES NORTH OF CREST PAD BLDG. INDICATE BURIED DOUBLE CONTAINED LEACHATE PIPING OR RAW WATER PIPING.
2. DASHED LINE INDICATES BURIED SINGLE WALL PIPING FOR SECONDARY CONTAINMENT SYSTEMS.
3. SLOPE ALL PIPING IN DIRECTION INDICATED AT 1% SLOPE MINIMUM. FOR PRIMARY PIPE FLOW DIRECTIONS, SEE P&ID'S ON H-2-830854, SHEETS 1 THROUGH 4.
4. INSTALL HDPE CAP ON CARRIER PIPE AND FIXED END SEAL FOR SECONDARY CONTAINMENT PIPE. THIS PIPE IS PROVIDED FOR FUTURE PUMP SUCTION CONNECTION TO FUTURE LEACHATE STORAGE TANK.
5. INSTALL HDPE CAP ON CARRIER PIPE AND FIXED END SEAL FOR SECONDARY CONTAINMENT PIPE. THIS PIPE IS PROVIDED FOR FUTURE LEACHATE TRANSFER BUILDING DISCHARGE CONNECTION TO FUTURE LEACHATE STORAGE TANK.
6. SEE DWG H-2-830829, SHT 2 FOR LEACHATE HANDLING FACILITIES SURVEY CONTROL POINTS. FOR CELL 1 FACILITIES CONTROL POINTS, REPLACE "*" WITH 4; FOR CELL 2 FACILITIES CONTROL POINTS, REPLACE "*" WITH 5.

   EXAMPLE: CELL 2 *02 IS 502
7. BEND RADIUS SHALL NOT BE LESS THAN ALLOWED BY PIPE MANUFACTURER.
8. STILLING WELLS SHALL BE INSTALLED PER TANK MANUFACTURER REQUIREMENTS AT THE LOCATION SHOWN FOR ANALOG AND DISCRETE LEVEL INSTRUMENTATION.
9. FLOATING COVER PUMP AND ASSOCIATED BASEPLATE/BRACKET SHALL BE INSTALLED PER TANK MANUFACTURER REQUIREMENTS AT THE LOCATION SHOWN. THIS PUMP SHALL BE OPERATED AS REQD TO MINIMIZE DEPTH OF RAIN/SNOWMELT ACCUMULATION ON TOP OF FLOATING COVER.
10. PIPING DESIGNATIONS ARE IDENTIFIED FOR CELL 1 AND CELL 2 LEACHATE PIPELINES. THE "219A" PREFIX IS FOR CELL 1 AND THE "219E" PREFIX IS FOR CELL 2.
11. APPLIES TO ALL PIPING NORTH OF CREST PAD BUILDING INCLUDING RAW WATER PIPING EXCEPT RAW WATER PIPIING SHALL HAVE MINIMUM 3'-6" OF COVER.
12. INSTALL 1" RAW WATER PIPE A MINIMUM OF 6" BELOW 8" HDPE PIPE.

N

0 10 20 30
1"=10'

EDWARD JOHN THOMAS
STATE OF WASHINGTON
38907
REGISTERED
PROFESSIONAL ENGINEER
EXPIRES 8/4/

CH2MHILL

THIS SPACE RESERVED FOR BUILDING AND INDEX NUMBERS

BLDG. NO.

INDEX NO.

DWG NO	TITLE
DRAWING TRACEABILITY LIST	

REF NUMBER	TITLE
REFERENCES	
NEXT USED ON	

REV NO	DESCRIPTION	REV BY DATE	ENGR COMPANY
0	SCH B AS-BUILTS FCN 100493, ECN 723902 REV 0	5/12/06	E THOMAS CH2Mhill

REVISIONS

NAME	DATE	COMPANY
DRAWN BY D KENDALL		CH2Mhill
DFTG APPROVED E THOMAS		CH2Mhill
ENGINEER H BAUNE		

U.S. DEPARTMENT OF ENERGY
Office of River Protection

TITLE
IDF
LEACHATE TRANSFER
PIPING PLAN

SIZE	BLDG NO	INDEX NO	DWG NO	REV
D	219A 219A1	8500	H-2-830846	0

SCALE AS SHOWN | EDT 822180 | SHEET 1 OF 1

PLOTID ORP_TB_D [12-02].DWG

WAS ECR-18-001801 PAGE 9 SKETCH-003

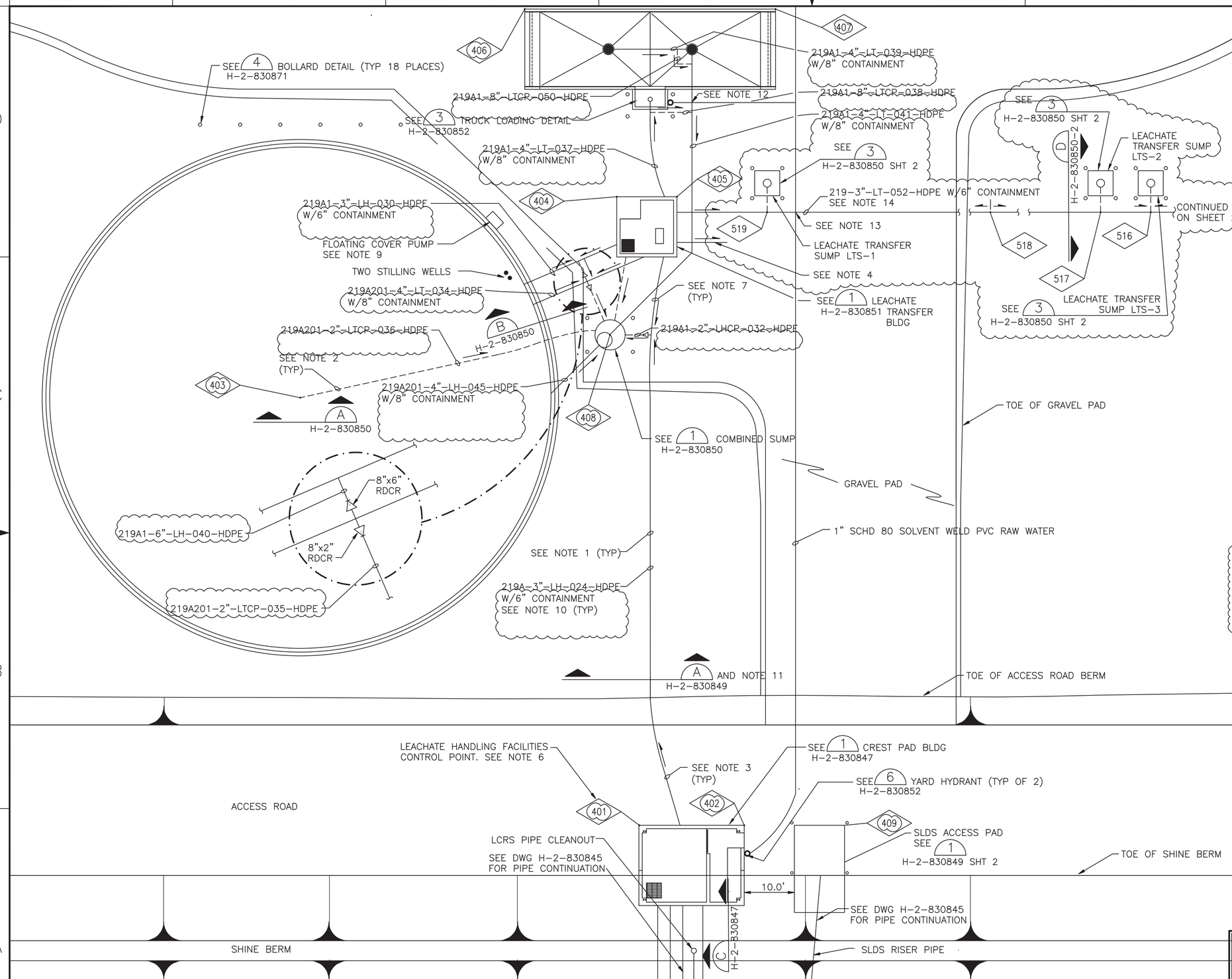

NOTES:

1. PIPES SHOWN AS SOLID LINES NORTH OF CREST PAD BLDG. INDICATE BURIED DOUBLE CONTAINED LEACHATE PIPING OR RAW WATER PIPING.
2. DASHED LINE INDICATES BURIED SINGLE WALL PIPING FOR SECONDARY CONTAINMENT SYSTEMS.
3. SLOPE ALL PIPING IN DIRECTION INDICATED AT 1% SLOPE MINIMUM, EXCEPT FOR LEACHATE TRANSFER LINES IDENTIFIED IN NOTE 14, WHICH ARE SLOPED AT 0.5% MINIMUM. FOR PRIMARY PIPE FLOW DIRECTIONS, SEE P&ID'S ON H-2-830854, SHEETS 1 THROUGH 4.
4. INSTALL HDPE CAP ON CARRIER PIPE AND FIXED END SEAL FOR SECONDARY CONTAINMENT PIPE. THIS PIPE IS PROVIDED FOR FUTURE PUMP SUCTION CONNECTION TO FUTURE LEACHATE STORAGE TANK.
5. NOT USED.
6. SEE DWG H-2-830829, SHT 2 FOR LEACHATE HANDLING FACILITIES SURVEY CONTROL POINTS.
7. BEND RADIUS SHALL NOT BE LESS THAN ALLOWED BY PIPE MANUFACTURER.
8. STILLING WELLS SHALL BE INSTALLED PER TANK MANUFACTURER REQUIREMENTS AT THE LOCATION SHOWN FOR ANALOG AND DISCRETE LEVEL INSTRUMENTATION.
9. FLOATING COVER PUMP AND ASSOCIATED BASEPLATE/BRACKET SHALL BE INSTALLED PER TANK MANUFACTURER REQUIREMENTS AT THE LOCATION SHOWN. THIS PUMP SHALL BE OPERATED AS REQD TO MINIMIZE DEPTH OF RAIN/SNOWMELT ACCUMULATION ON TOP OF FLOATING COVER.
10. PIPING DESIGNATIONS ARE IDENTIFIED FOR CELL 1 AND CELL 2 LEACHATE PIPELINES. THE "219A" PREFIX IS FOR CELL 1 AND THE "219E" PREFIX IS FOR CELL 2.
11. APPLIES TO ALL PIPING NORTH OF CREST PAD BUILDING EXCEPT FOR LEACHATE LINES IDENTIFIED AS SECTION D, INCLUDING RAW WATER PIPING EXCEPT RAW WATER PIPING SHALL HAVE MINIMUM 3'-6" OF COVER.
12. INSTALL 1" RAW WATER PIPE A MINIMUM OF 6" BELOW 8" HDPE PIPE.
13. REROUTE 1" PVC RAW WATER LINE TO MAINTAIN 6" OF VERTICAL SEPARATION, AS NEEDED.
14. FOR LEACHATE TRANSFER LINES 219-3"-LT-052-HDPE, 219-6"-LTCP-053-HDPE, AND 219-12"-LTCP-054-HDPE, REFER TO CHPRC-03953, DIVISION 33 FOR SPECIFICATIONS.

N

0 10 20 30
1"=10'

BLDG. NO.

INDEX NO.

THIS SPACE RESERVED FOR BUILDING AND INDEX NUMBERS

DWG NO	TITLE	REF NUMBER	TITLE
DRAWING TRACEABILITY LIST		REFERENCES	
		NEXT USED ON	

REV No.	MFD	REV NO.	DESCRIPTION	REV BY DATE	ENGR	COMPANY
		1	REVISED PER ECR-18-001801			
		0	SCH BI AS-BUILTS FCN 100493, ECN 723902 REV 0	5/12/06	E THOMAS	CH2Mhill

REVISIONS

NAME	DATE	COMPANY
DRAWN BY D. KENDALL		CH2Mhill
DFTG APPROVED E. THOMAS		CH2Mhill
ENGINEER M. BAUNE		

U.S. DEPARTMENT OF ENERGY
Office of River Protection

TITLE: IDF LEACHATE TRANSFER PIPING PLAN

SIZE	BLDG NO	INDEX NO	DWG NO	REV
D	219A 219A1	8500	H-2-830846	1

SCALE AS SHOWN | EDT 822180 | SHEET 1 OF 2

PLOTID ORP_TB_D [12-02].DWG

PAGE 10 SKETCH-003

IS ECR-18-001801

NOTE

1. FOR NOTES, SEE SHEET 1.

NOTE TO CONSTRUCTION

1. SCOPE OF CHANGES IS LIMITED TO INSTALLATION OF NEW LEACHATE TRANSFER LINES (SEE INTERFACE WITH EXISTING TRANSFER LINES FOR 219-3"-LT-052-HDPE). OTHER ITEMS ARE CLOUDED TO REPRESENT ADDITIONS TO NEW DRAWING SHEET; NOT PHYSICAL CHANGES IN THE FIELD.

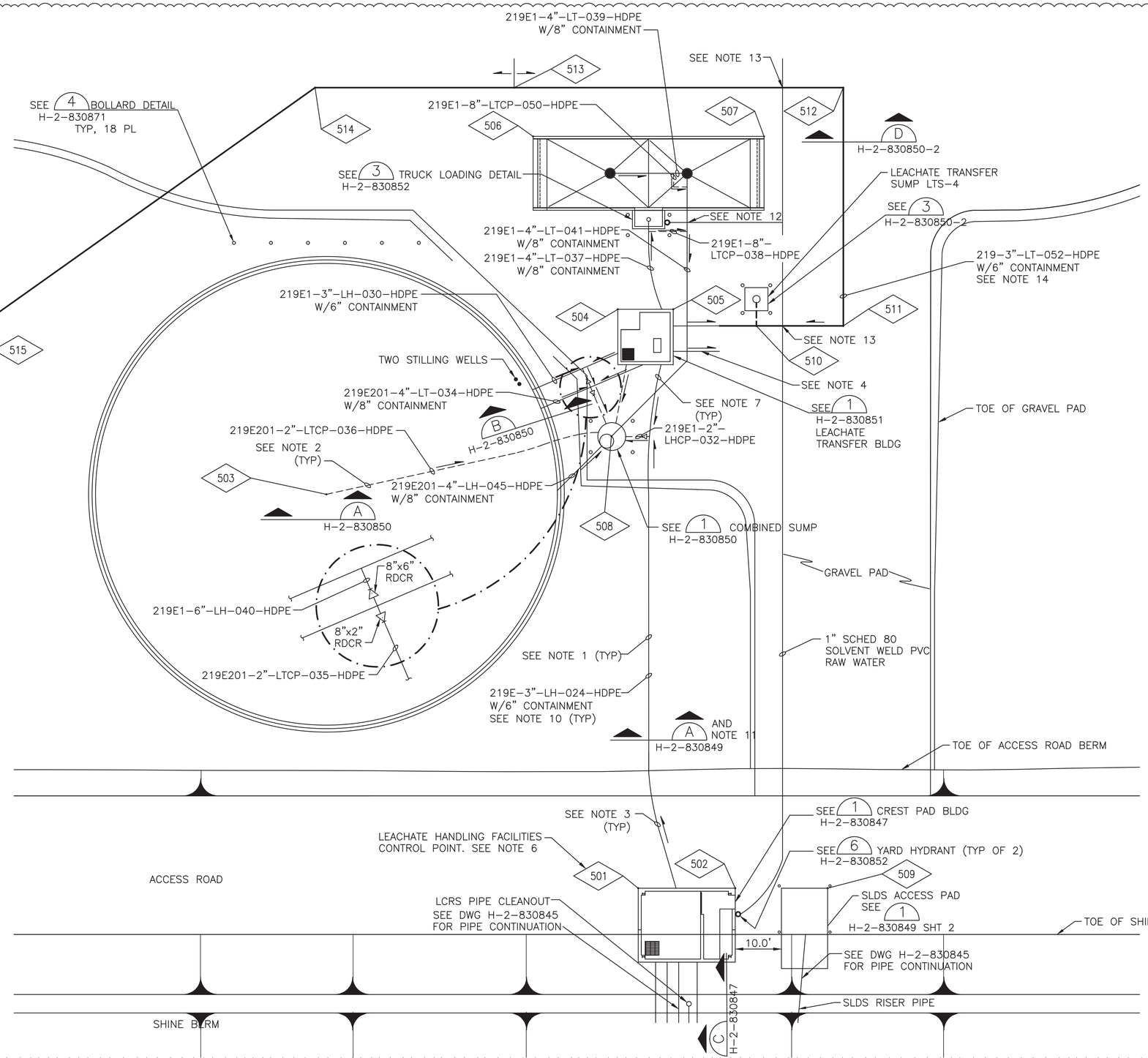

DWG NO	TITLE	REF NUMBER	TITLE
DRAWING TRACEABILITY LIST		REFERENCES	
		NEXT USED ON	

REV NO	DESCRIPTION	REV BY DATE	ENGR	COMPANY
0	INITIAL RELEASE PER ECR-18-001801			

REVISIONS

NAME	DATE	COMPANY
DRAWN BY VR DAVISON		VNSFS
DFTG APPROVED JR PIERCE		VNSFS
DESIGN AUTHORITY		

U.S. DEPARTMENT OF ENERGY
Office of River Protection

TITLE: IDF LEACHATE TRANSFER PIPING PLAN

SIZE	BLDG NO	INDEX NO	DWG NO	REV
D	219A 219A1	8500	H-2-830846	0

SCALE AS SHOWN EDT ECR-18-001801 SHEET 2 OF 2

PLOTID ORP_TB_D [12-02].DWG

BLDG. NO.

INDEX NO.

THIS SPACE RESERVED FOR BUILDING AND INDEX NUMBERS

PAGE 11 SKETCH-003

ADD ECR-18-001801

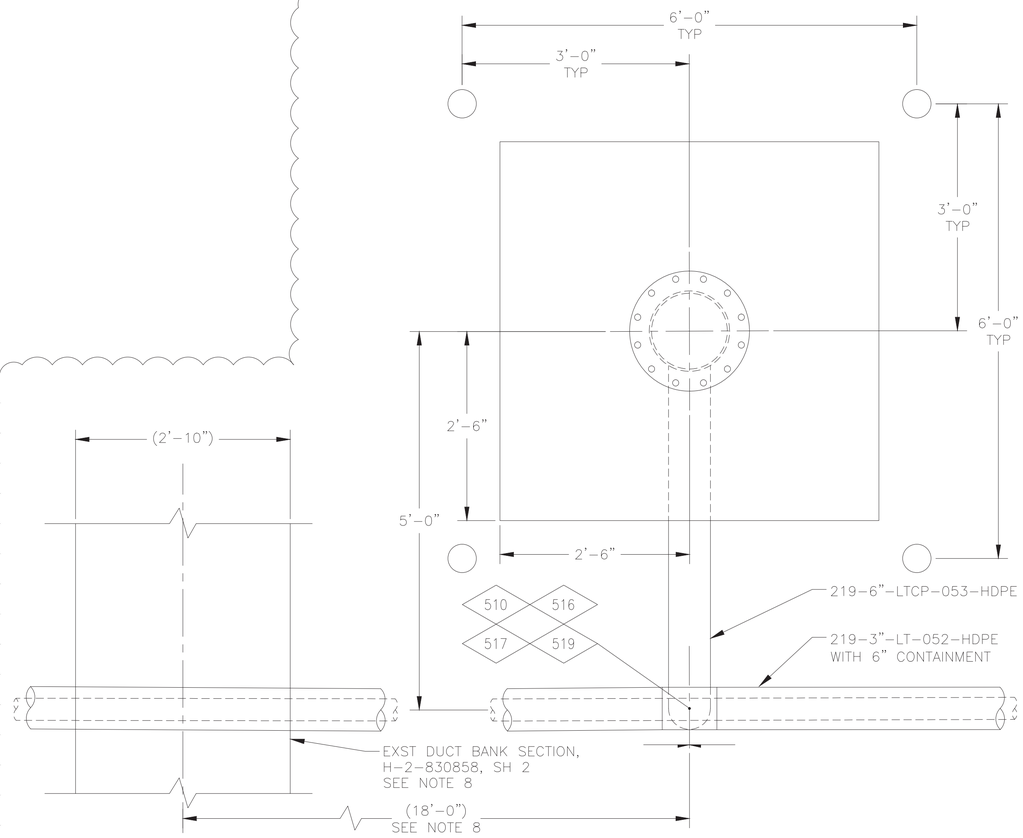

3 LEACHATE TRANSFER SUMP DETAIL

H-2-830846-1 SCALE: NOT TO SCALE
H-2-830846-2

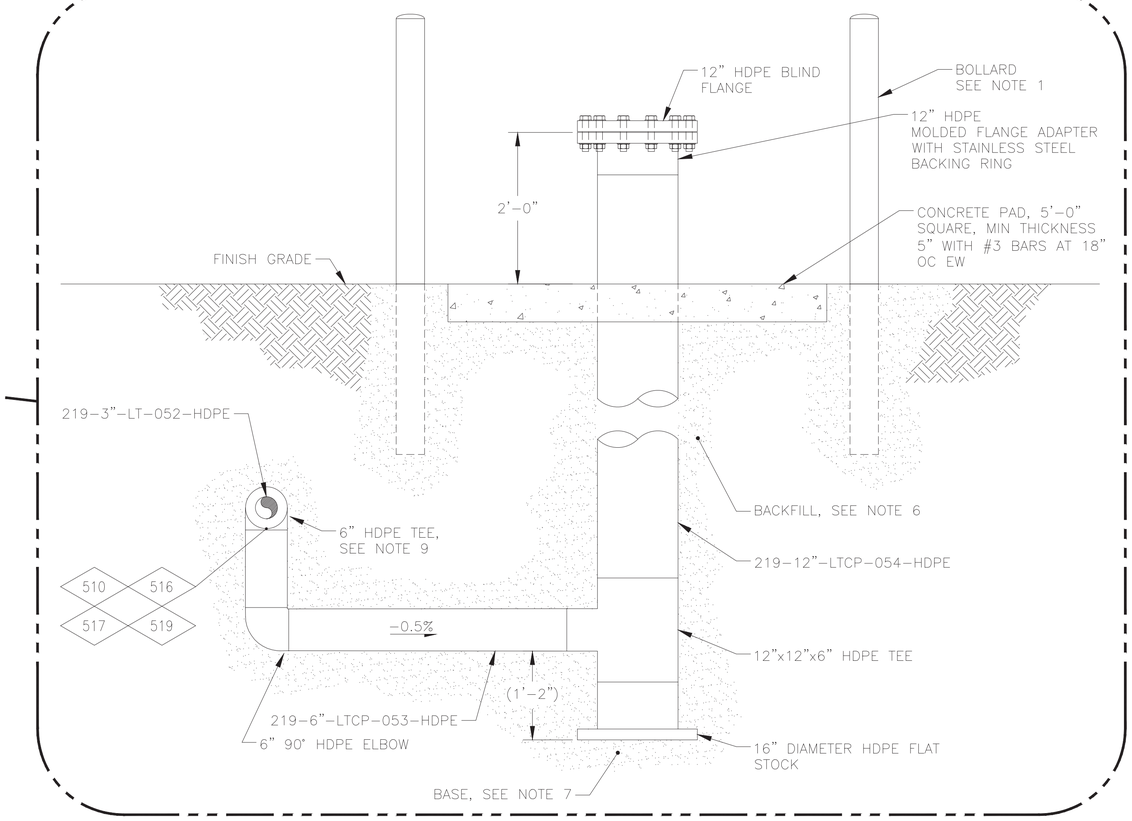

NOTES:

1. INSTALL 4 BOLLARDS AROUND SUMP PAD. SEE H-2-830871 DETAIL 4 FOR BOLLARD DETAIL.
2. PROVIDE DISTANCE AS REQUIRED TO BUTT FUSE IN FIELD, TYP.
3. SLOPE PIPE 0.5% AS SHOWN.
4. SEE DRAWING H-2-830829 SH 2 FOR LEACHATE HANDLING FACILITIES CONTROL POINTS.
5. REFER TO CHPRC-03953, SECTION 33 05 73 FOR SPECIFICATIONS.
6. BACKFILL SHALL EXTEND AT LEAST 3.5 FEET FROM PERIMETER OF SUMP FOR THE FULL HEIGHT. BACKFILL TO CONSIST OF ASTM D2321 CLASS I OR II SOIL COMPACTED TO 90% STANDARD PROCTOR MINIMUM.
7. MANHOLE BASE SHELL BE A MINIMUM OF 12 INCHES DEEP. BACKFILL FOR BASE SHALL BE ASTM D2321, CLASS I COMPACTED TO 95% STANDARD PROCTOR MINIMUM.
8. FOR SUMP AT POINT 517 ONLY, ROUTE LEACHATE LINE MINIMUM OF 6 INCHES BELOW EXISTING ELECTRICAL CONDUIT DUCT BANK. CONTINUE 0.5% SLOPE DOWN TO SUMP CONNECTION AT POINT 517.
9. CUT 3" PIPE LENGTH TO MATCH 6" BUTT FUSION TEE AND INSTALL SPACERS AT EACH END AS REQUIRED TO HOLD 3" PIPE IN PLACE. THEN BUTT FUSE 3" PIPE AND 6" TEE TO MATING SURFACES OF 3" AND 6" PIPE. ALTERNATIVELY, USE APPROVED EQUIVALENT.

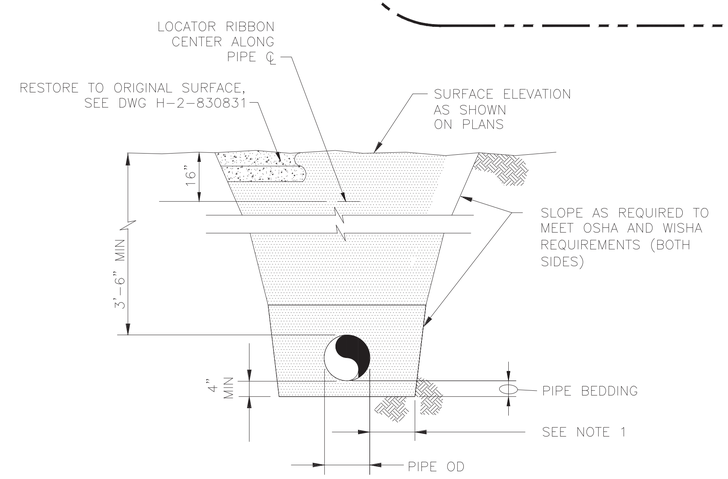

PIPE TRENCH D

NTS H-2-830846-1 H-2-830846-2

NOTES:

1. SEE CHPRC-03953, SECTION 33 05 33.23 FOR CONSTRUCTION SPECIFICATION.

DWG NO	TITLE	REF NUMBER	TITLE
DRAWING TRACEABILITY LIST		REFERENCES	
		NEXT USED ON	

REV Rel	MFD	REV NO	DESCRIPTION	REV BY DATE	ENGR	COMPANY
		0	INITIAL RELEASE PER ECR-18-001801			

REVISIONS

NAME	DATE	COMPANY
DRAWN BY VR DAVISON		VNSFS
OPTO APPROVED JB PIERCE		VNSFS
DESIGN AUTHORITY		

U.S. DEPARTMENT OF ENERGY
Office of River Protection

TITLE IDF LCRS / LDS SECTIONS AND DETAILS

SIZE	BLDG NO	INDEX NO	DWG NO	REV
D	200E	8500	H-2-830850	0

SCALE AS SHOWN EDT ECR-18-001801 SHEET 2 OF 2

PLOTID ORP_TB_D [12-02].DWG

ADD ECR-18-001801 PAGE 12 SKETCH-004

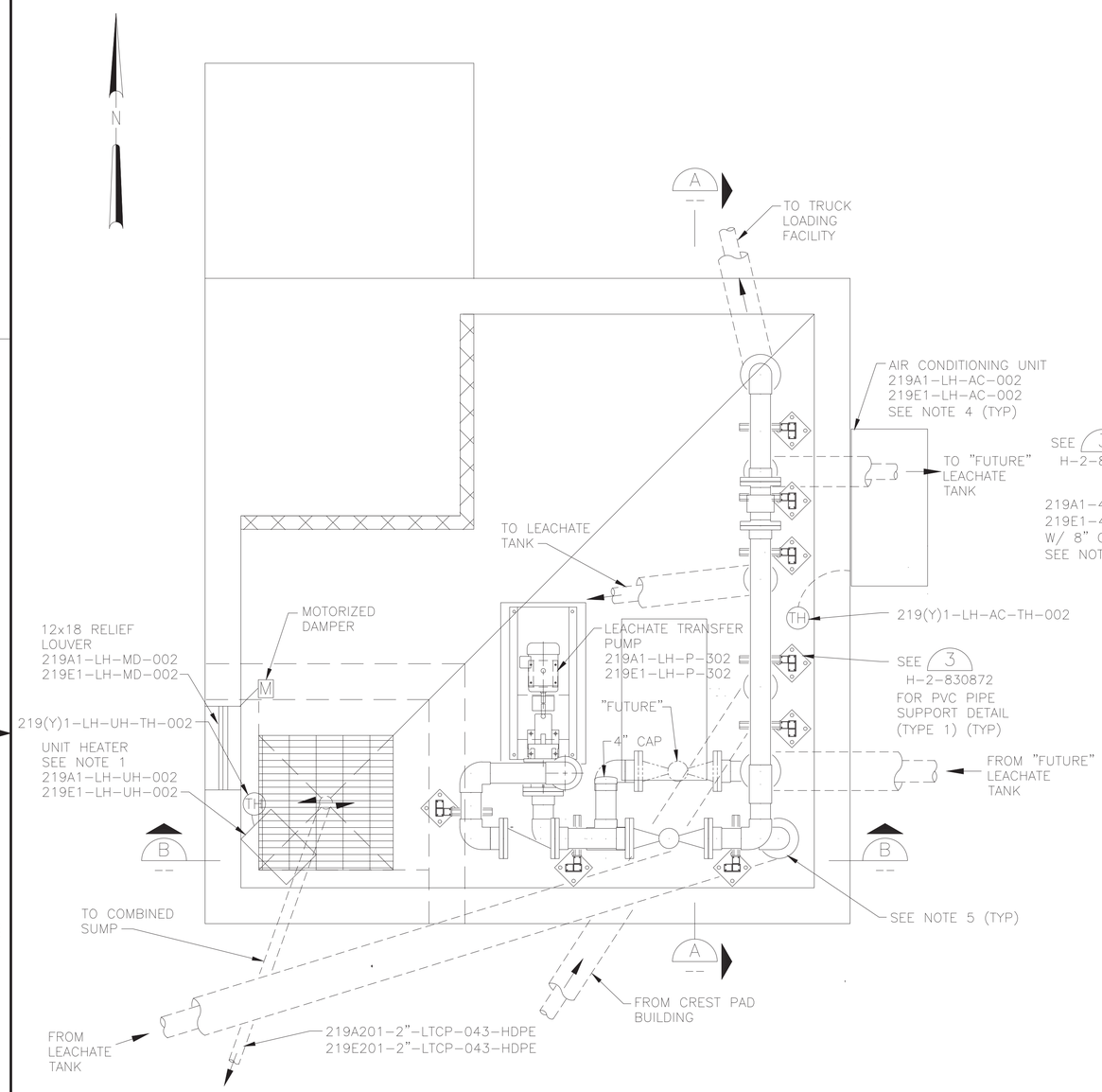

LEACHATE TRANSFER BUILDING (219A1 & 219E1) 1
3/4" = 1'-0" H-2-830846

0 1 2 3
3/4"=1'-0"

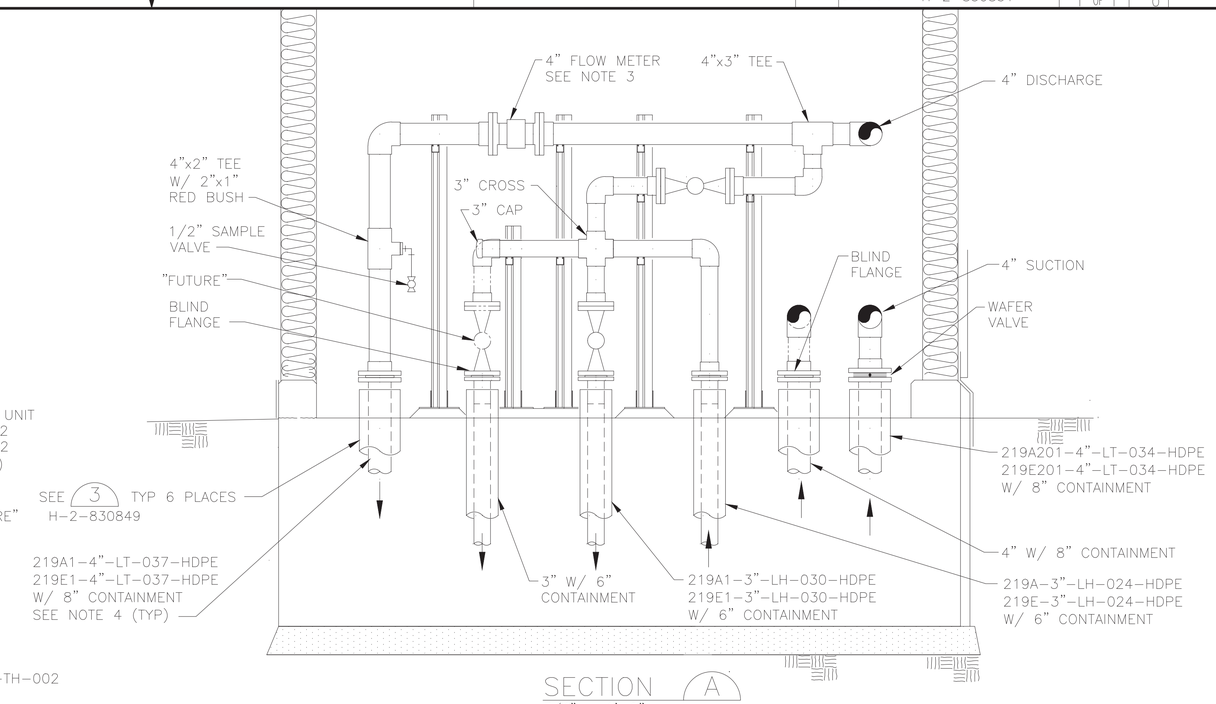

SECTION A
3/4" = 1'-0"

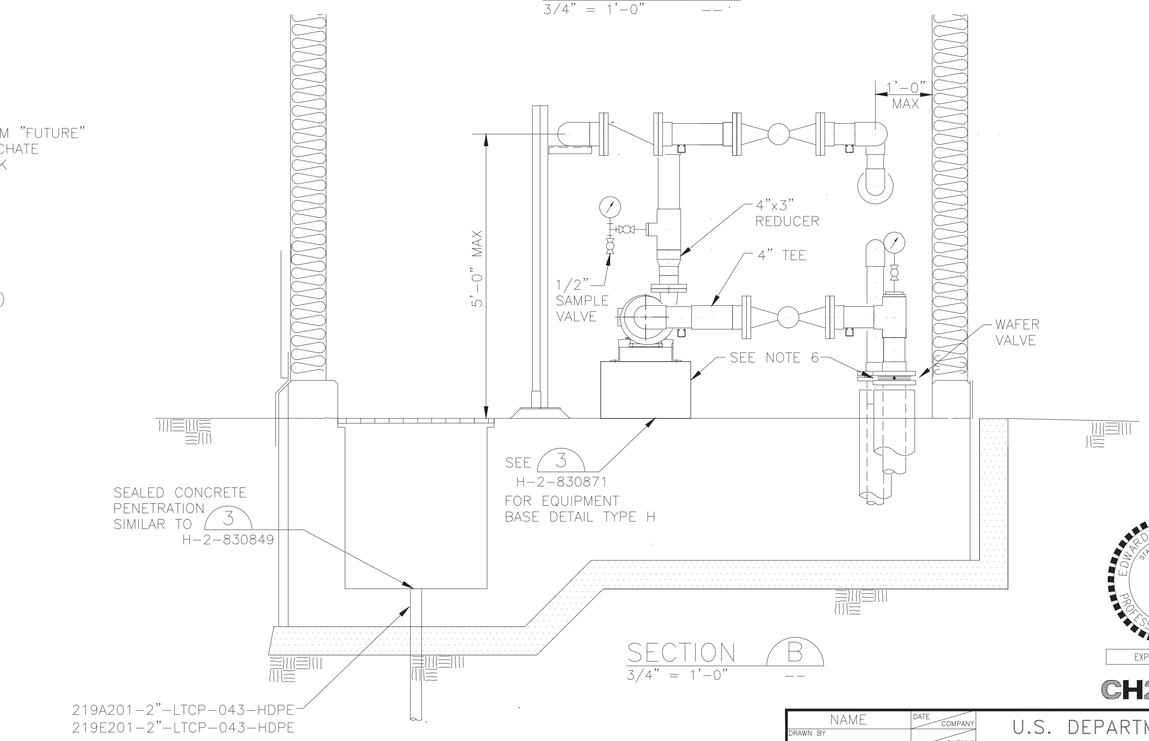

SECTION B
3/4" = 1'-0"

NOTES:

1. SUPPORT UNIT HEATER FROM THE CEILING.
2. "FUTURE" IDENTIFIES PIPE AND VALVES THAT MAY REQUIRE FUTURE INSTALLATION FOR AN ADDITIONAL LEACHATE STORAGE TANK.
3. MAINTAIN MINIMUM STRAIGHT RUN OF PIPE UPSTREAM AND DOWNSTREAM OF FLOWMETER PER MANUFACTURER RECOMMENDATIONS.
4. PIPING AND EQUIPMENT DESIGNATIONS ARE IDENTIFIED FOR CELL 1 AND CELL 2. THE "219A" PREFIX IS FOR CELL 1 AND THE "219E" PREFIX IS FOR CELL 2.
5. PROVIDE MIN 12 IN. OF COVER BETWEEN TOP OF PIPE AND BUILDING CONCRETE.
6. INSTALL PUMP AND PUMP SUCTION FLANGES AT MIN HEIGHT ABOVE FLOOR NECESSARY TO MINIMIZE PUMP SUCTION ELEVATION.

DWG NO	TITLE	REF NUMBER	TITLE
DRAWING TRACEABILITY LIST		REFERENCES	
		NEXT USED ON	

REV NO	DESCRIPTION	REV BY DATE	ENGR	COMPANY
0	SCH B AS-BUILTS, FCN 100539, 100584, 100614, ECN 723902 REV 0	5/12/06	E THOMAS	CH2MHill

REVISIONS

NAME	DATE	COMPANY
DRAWN BY D. KENDALL		CH2MHill
DTG APPROVED E. THOMAS		CH2MHill
ENGINEER H. BAUNE		

U.S. DEPARTMENT OF ENERGY
Office of River Protection

TITLE
IDF
219A1 & 219E1
PLAN & SECTIONS

SIZE	BLDG NO	INDEX NO	DWG NO	REV
D	219A1 219E1	8500	H-2-830851	0

SCALE AS SHOWN EDT 822180 SHEET 1 OF 1

EDWARD JOHN THOMAS STATE OF WASHINGTON 38907 REGISTERED PROFESSIONAL ENGINEER
EXPIRES 8/4/

CH2MHILL

THIS SPACE RESERVED FOR BUILDING AND INDEX NUMBERS

BLDG. NO.

INDEX NO.

PAGE 13 SKETCH-005

WAS ECR-18-001801

PLOTID ORP_TB_D [12-02].DWG

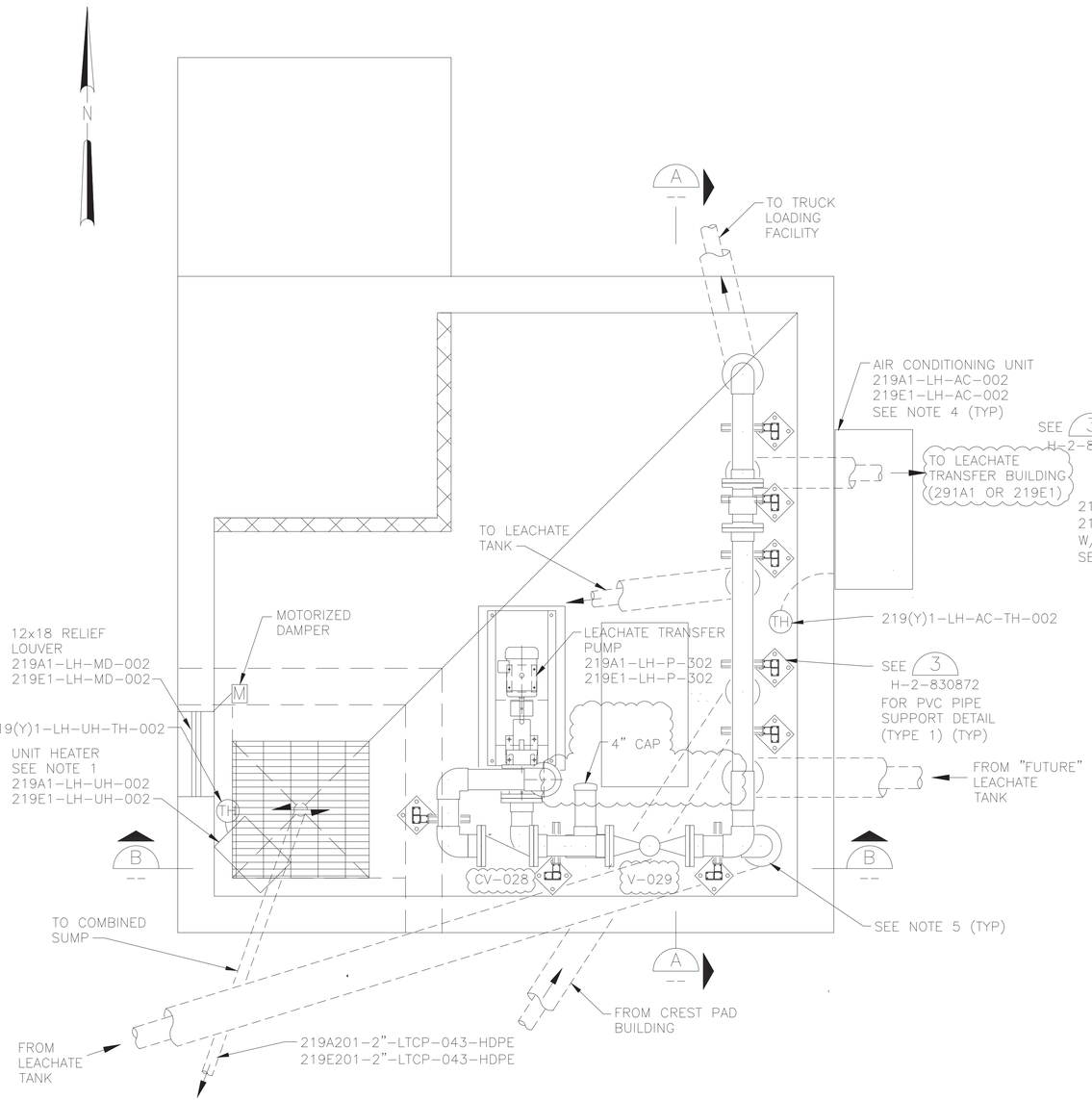

LEACHATE TRANSFER BUILDING (219A1 & 219E1) 1
3/4" = 1'-0" H-2-830846

0 1 2 3
3/4"=1'-0"

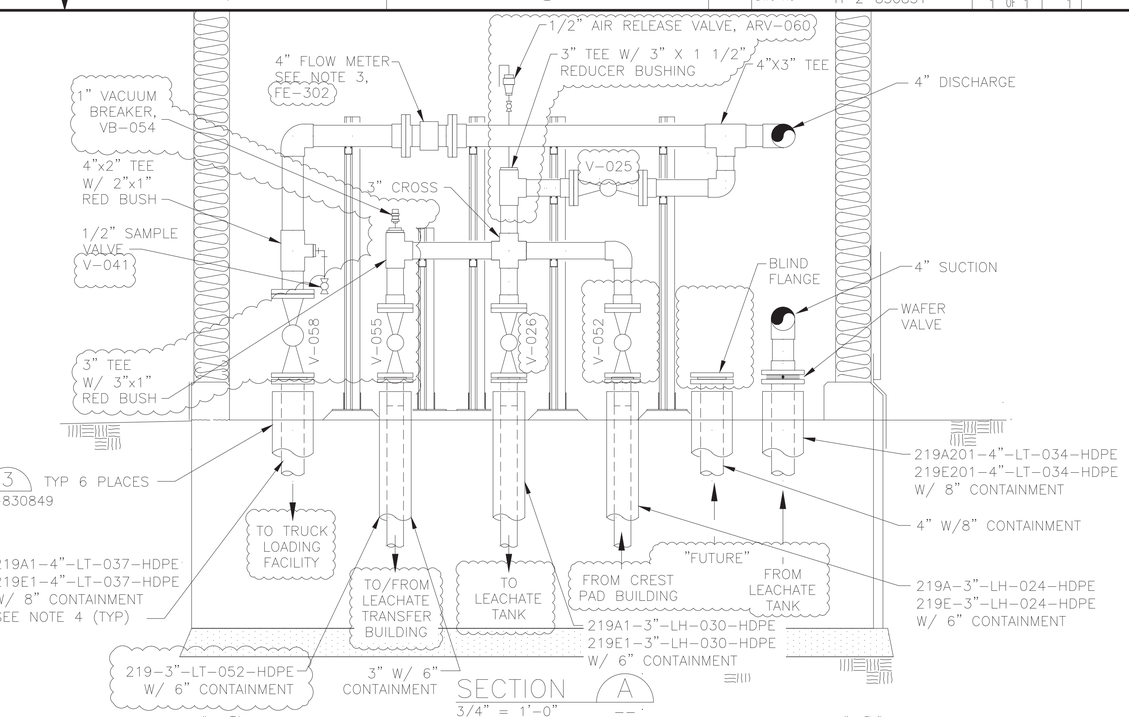

SECTION A
3/4" = 1'-0"

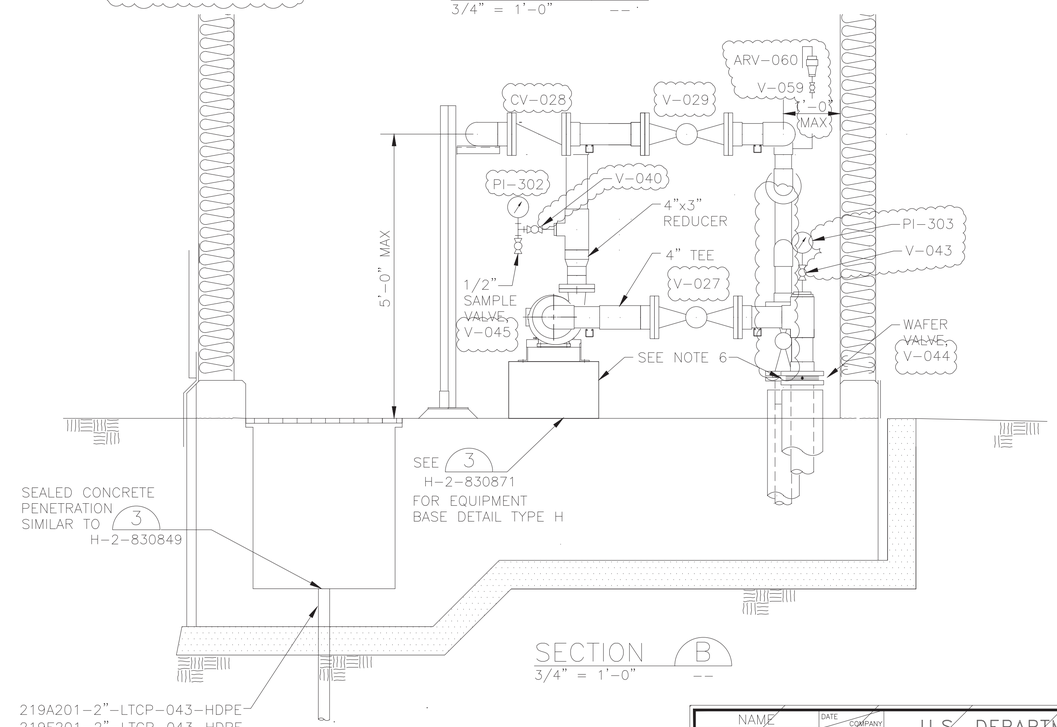

SECTION B
3/4" = 1'-0"

NOTES:

1. SUPPORT UNIT HEATER FROM THE CEILING.
2. NOT USED.
3. MAINTAIN MINIMUM STRAIGHT RUN OF PIPE UPSTREAM AND DOWNSTREAM OF FLOWMETER PER MANUFACTURER RECOMMENDATIONS.
4. PIPING AND EQUIPMENT DESIGNATIONS ARE IDENTIFIED FOR CELL 1 AND CELL 2. THE "219A" PREFIX IS FOR CELL 1 AND THE "219E" PREFIX IS FOR CELL 2.
5. PROVIDE MIN 12 IN. OF COVER BETWEEN TOP OF PIPE AND BUILDING CONCRETE.
6. INSTALL PUMP AND PUMP SUCTION FLANGES AT MIN HEIGHT ABOVE FLOOR NECESSARY TO MINIMIZE PUMP SUCTION ELEVATION.
7. FOR 219-3"-LT-052, V-052, VB-054, V-055, V-058, V-059, AND ARV-060, SEE CHPRC-03953 FOR PVC, HDPE, AND VALVE SPECIFICATIONS FOR MODIFIED LEACHATE TRANSFER COMPONENTS PER ECR-18-001801.

DWG NO	TITLE	REF NUMBER	TITLE
		REFERENCES	

DRAWING TRACEABILITY LIST — NEXT USED ON

REV Rev	MFD	REV NO.	DESCRIPTION	REV BY DATE		ENGR	COMPANY
		1	REVISED PER ECR-18-001801				
		0	SCH B AS-BUILTS, FCN 100539, 100584, 100814, ECN 723902 REV 0	5/12/06		E THOMAS	CH2MHill

REVISIONS

NAME	DATE	COMPANY
DRAWN BY D. KENDALL		CH2MHill
DFTG APPROVED E. THOMAS		CH2MHill
ENGINEER W. BAUNE		

U.S. DEPARTMENT OF ENERGY
Office of River Protection

TITLE: IDF 219A1 & 219E1 PLAN & SECTIONS

SIZE	BLDG NO	INDEX NO	DWG NO	REV
D	219A1 219E1	8500	H-2-830851	1

SCALE AS SHOWN EDT 822180 SHEET 1 OF 1

PLOTID ORP_TB_D 112-02[.DWG]

BLDG. NO.

INDEX NO.

THIS SPACE RESERVED FOR BUILDING AND INDEX NUMBERS

PAGE 14 SKETCH-005

IS ECR-18-001801

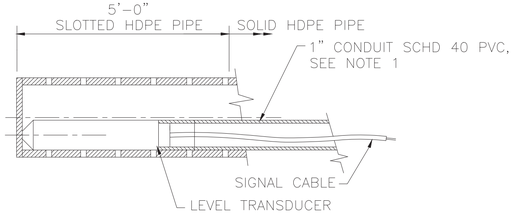

NOTE:

1. 1" CBG FITTING WILL BE SCREWED INTO A FEMALE PVC THREADED ADAPTER AND BE SOLVENT WELDED TO CONDUIT.

SUMP LEVEL TRANSDUCER INSTALLATION (1)
NTS H-2-830848 H-2-830849

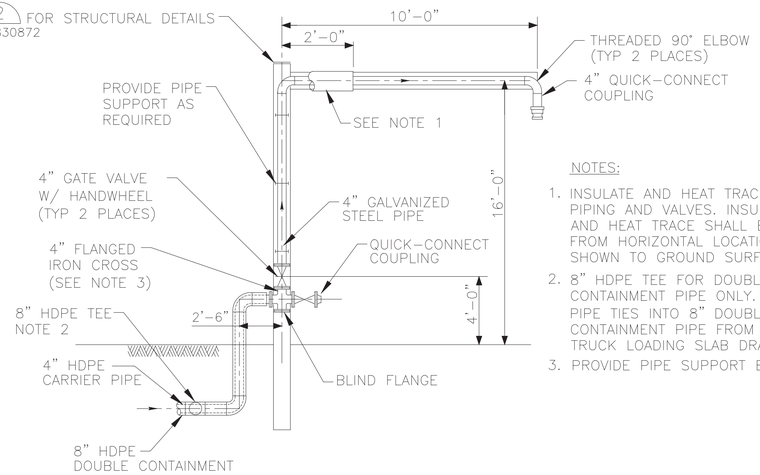

NOTES:

1. INSULATE AND HEAT TRACE PIPING AND VALVES. INSULATION AND HEAT TRACE SHALL EXTEND FROM HORIZONTAL LOCATION SHOWN TO GROUND SURFACE.
2. 8" HDPE TEE FOR DOUBLE CONTAINMENT PIPE ONLY. THIS PIPE TIES INTO 8" DOUBLE CONTAINMENT PIPE FROM TRUCK LOADING SLAB DRAIN.
3. PROVIDE PIPE SUPPORT BELOW CROSS.

TRUCK LOADING CONNECTION (3)
NTS H-2-830846

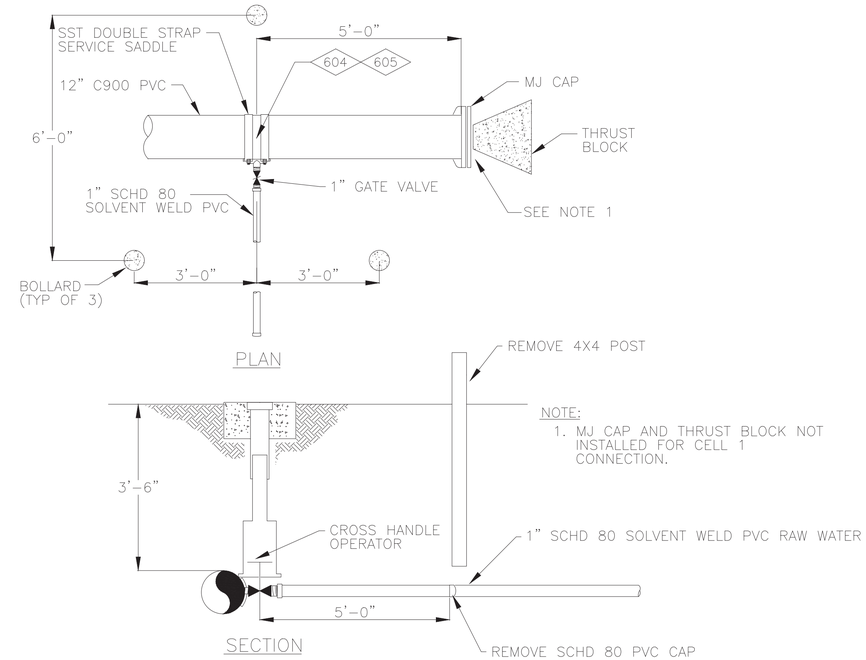

NOTE:

1. MJ CAP AND THRUST BLOCK NOT INSTALLED FOR CELL 1 CONNECTION.

YARD HYDRANT SERVICE CONNECTION (5)
NTS H-2-830845

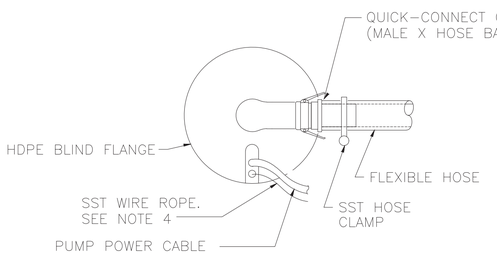

NOTES:

1. PROVIDE ONLY SST NIPPLE THROUGH BLIND FLANGE FOR LEACHATE RECIRCULATION LINE.
2. TYPICAL RISER CONNECTIONS FROM PUMP DISCHARGE PIPE TO BLDG PIPING SHALL CONSIST OF QUICK-CONNECT COUPLINGS AND FLEXIBLE HOSE.
3. PROVIDE SNATCH BLOCK FOR FACILITATING RAISING AND LOWERING PUMP ASSEMBLY WITH WINCH.
4. SST WIRE ROPE LIFTING CABLE, SHALL HAVE A SWAGE BALL FITTING CABLE END. PROVIDE WALL ANCHOR ATTACHMENT FOR CABLE END TO PREVENT ACCIDENTAL LOSS OF CABLE DOWN RISER PIPE.

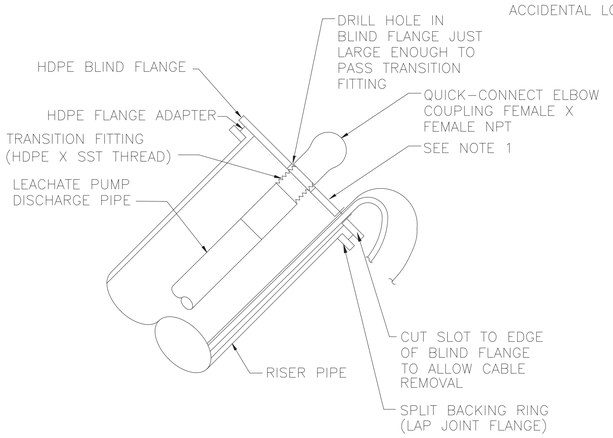

RISER CONNECTION DETAIL (2)
NTS H-2-830847

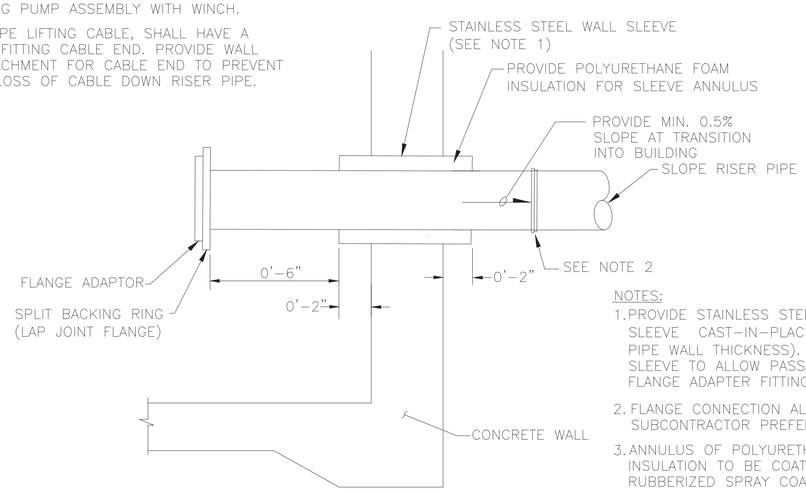

NOTES:

1. PROVIDE STAINLESS STEEL PIPE WALL SLEEVE CAST-IN-PLACE (MIN 3/16" PIPE WALL THICKNESS). SIZE WALL SLEEVE TO ALLOW PASSAGE OF FLANGE ADAPTER FITTING.
2. FLANGE CONNECTION ALLOWED IF SUBCONTRACTOR PREFERS.
3. ANNULUS OF POLYURETHANE INSULATION TO BE COATED WITH RUBBERIZED SPRAY COATING.

RISER WALL PENETRATION DETAIL (4)
NTS H-2-830847

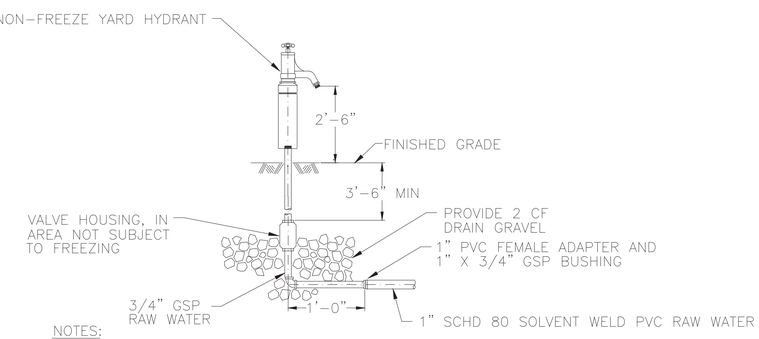

NOTES:

1. PROVIDE WARNING SIGN INDICATING "NON-POTABLE WATER", AND "HIGH PRESSURE".

YARD HYDRANT (6)
NTS H-2-830846

EDWARD JOHN THOMAS STATE OF WASHINGTON 38907 REGISTERED PROFESSIONAL ENGINEER
EXPIRES 8/4/

CH2MHILL

DWG NO	TITLE	REF NUMBER	TITLE
DRAWING TRACEABILITY LIST		NEXT USED ON	REFERENCES

REV Rel	MFD	REV NO	DESCRIPTION	REV BY DATE			ENGR	COMPANY
		0	SCH B AS-BUILTS FCN 100474, ECN 723902 REV 0	5/12/06			E THOMAS	CH2Mhill
REVISIONS								

NAME	DATE	COMPANY
DRAWN BY D. KENDALL		CH2Mhill
DFTG APPROVED E. THOMAS		CH2Mhill
ENGINEER H. BAUNE		

U.S. DEPARTMENT OF ENERGY
Office of River Protection

TITLE
IDF
LCRS / LDS
SECTION AND DETAILS

SIZE	BLDG NO	INDEX NO	DWG NO	REV
D	200E	8500	H-2-830852	0

SCALE AS SHOWN EDT 822180 SHEET 1 OF 1

PLOTID ORP_TB_D 112-02LDWG

PAGE 15 SKETCH-006

WAS ECR-18-001801

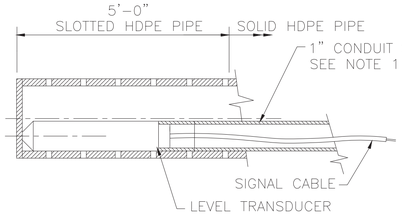

NOTE:

1. 1" CBG FITTING WILL BE SCREWED INTO A FEMALE PVC THREADED ADAPTER AND BE SOLVENT WELDED TO CONDUIT.

SUMP LEVEL TRANSDUCER INSTALLATION (1)
NTS H-2-830848 H-2-830849

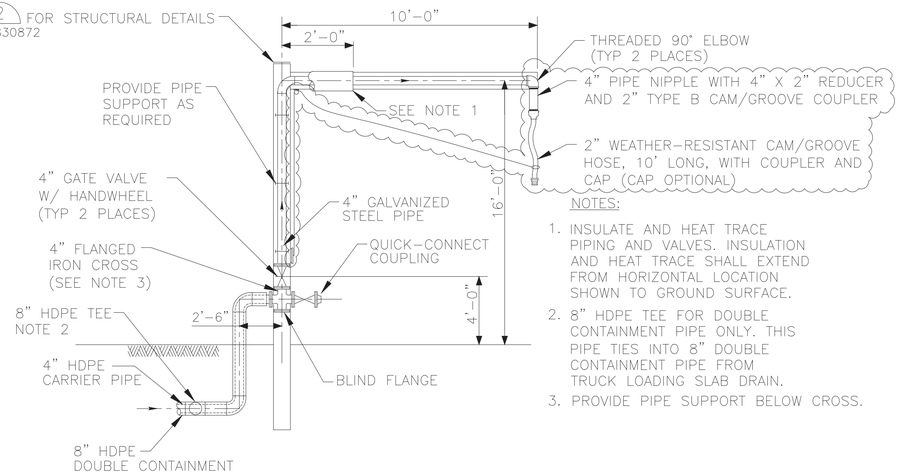

NOTES:

1. INSULATE AND HEAT TRACE PIPING AND VALVES. INSULATION AND HEAT TRACE SHALL EXTEND FROM HORIZONTAL LOCATION SHOWN TO GROUND SURFACE.
2. 8" HDPE TEE FOR DOUBLE CONTAINMENT PIPE ONLY. THIS PIPE TIES INTO 8" DOUBLE CONTAINMENT PIPE FROM TRUCK LOADING SLAB DRAIN.
3. PROVIDE PIPE SUPPORT BELOW CROSS.

TRUCK LOADING CONNECTION (3)
NTS H-2-830846

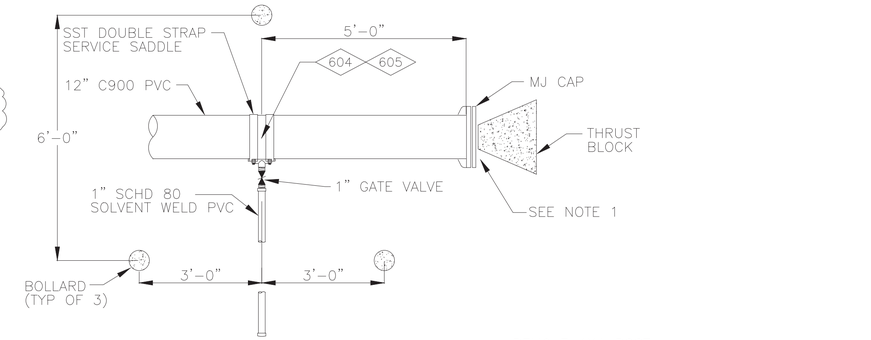

PLAN

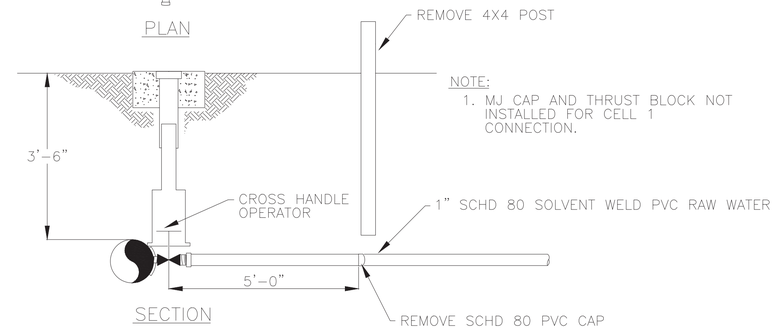

SECTION

NOTE:

1. MJ CAP AND THRUST BLOCK NOT INSTALLED FOR CELL 1 CONNECTION.

YARD HYDRANT SERVICE CONNECTION (5)
NTS H-2-830845

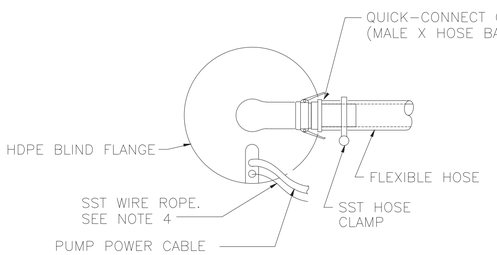

NOTES:

1. PROVIDE ONLY SST NIPPLE THROUGH BLIND FLANGE FOR LEACHATE RECIRCULATION LINE.
2. TYPICAL RISER CONNECTIONS FROM PUMP DISCHARGE PIPE TO BLDG PIPING SHALL CONSIST OF QUICK-CONNECT COUPLINGS AND FLEXIBLE HOSE.
3. PROVIDE SNATCH BLOCK FOR FACILITATING RAISING AND LOWERING PUMP ASSEMBLY WITH WINCH.
4. SST WIRE ROPE LIFTING CABLE, SHALL HAVE A SWAGE BALL FITTING CABLE END. PROVIDE WALL ANCHOR ATTACHMENT FOR CABLE END TO PREVENT ACCIDENTAL LOSS OF CABLE DOWN RISER PIPE.

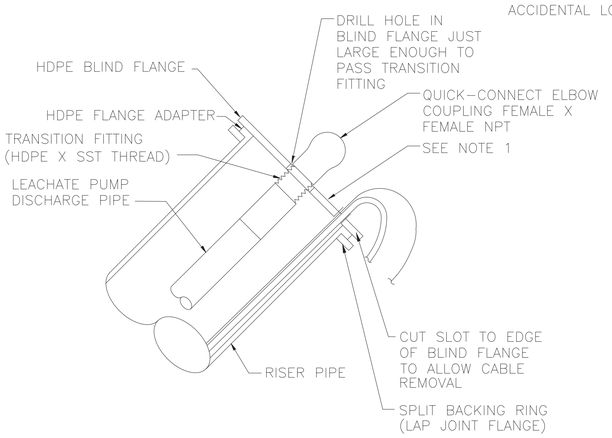

RISER CONNECTION DETAIL (2)
NTS H-2-830847

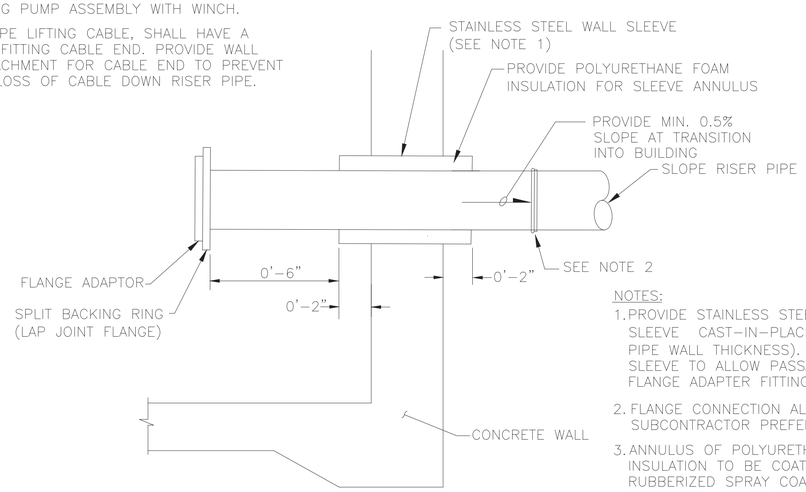

NOTES:

1. PROVIDE STAINLESS STEEL PIPE WALL SLEEVE CAST-IN-PLACE (MIN 3/16" PIPE WALL THICKNESS). SIZE WALL SLEEVE TO ALLOW PASSAGE OF FLANGE ADAPTER FITTING.
2. FLANGE CONNECTION ALLOWED IF SUBCONTRACTOR PREFERS.
3. ANNULUS OF POLYURETHANE INSULATION TO BE COATED WITH RUBBERIZED SPRAY COATING.

RISER WALL PENETRATION DETAIL (4)
NTS H-2-830847

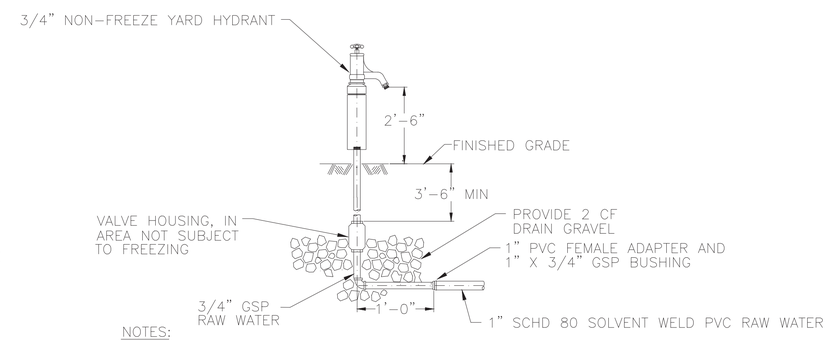

NOTES:

1. PROVIDE WARNING SIGN INDICATING "NON-POTABLE WATER", AND "HIGH PRESSURE".

YARD HYDRANT (6)
NTS H-2-830846

DWG NO	TITLE	REF NUMBER	TITLE
DRAWING TRACEABILITY LIST		NEXT USED ON	REFERENCES

REV Rel	MFD	REV NO.	DESCRIPTION	REV BY DATE	ENGR	COMPANY
		1	REVISED PER ECR-18-001801			
		0	SCH B AS-BUILTS FCN 100474, ECN 723902 REV 0	5/12/06	E THOMAS	CH2Mhill

REVISIONS

	NAME	DATE	COMPANY
DRAWN BY	D KENDALL		CH2Mhill
DFTG APPROVED	E THOMAS		CH2Mhill
ENGINEER	P BAUNE		

U.S. DEPARTMENT OF ENERGY
Office of River Protection

TITLE: IDF LCRS / LDS SECTION AND DETAILS

SIZE	BLDG NO	INDEX NO	DWG NO	REV
D	200E	8500	H-2-830852	1

SCALE AS SHOWN EDT 822180 SHEET 1 OF 1

PLOTID ORP_TB_D 112-02LDWG

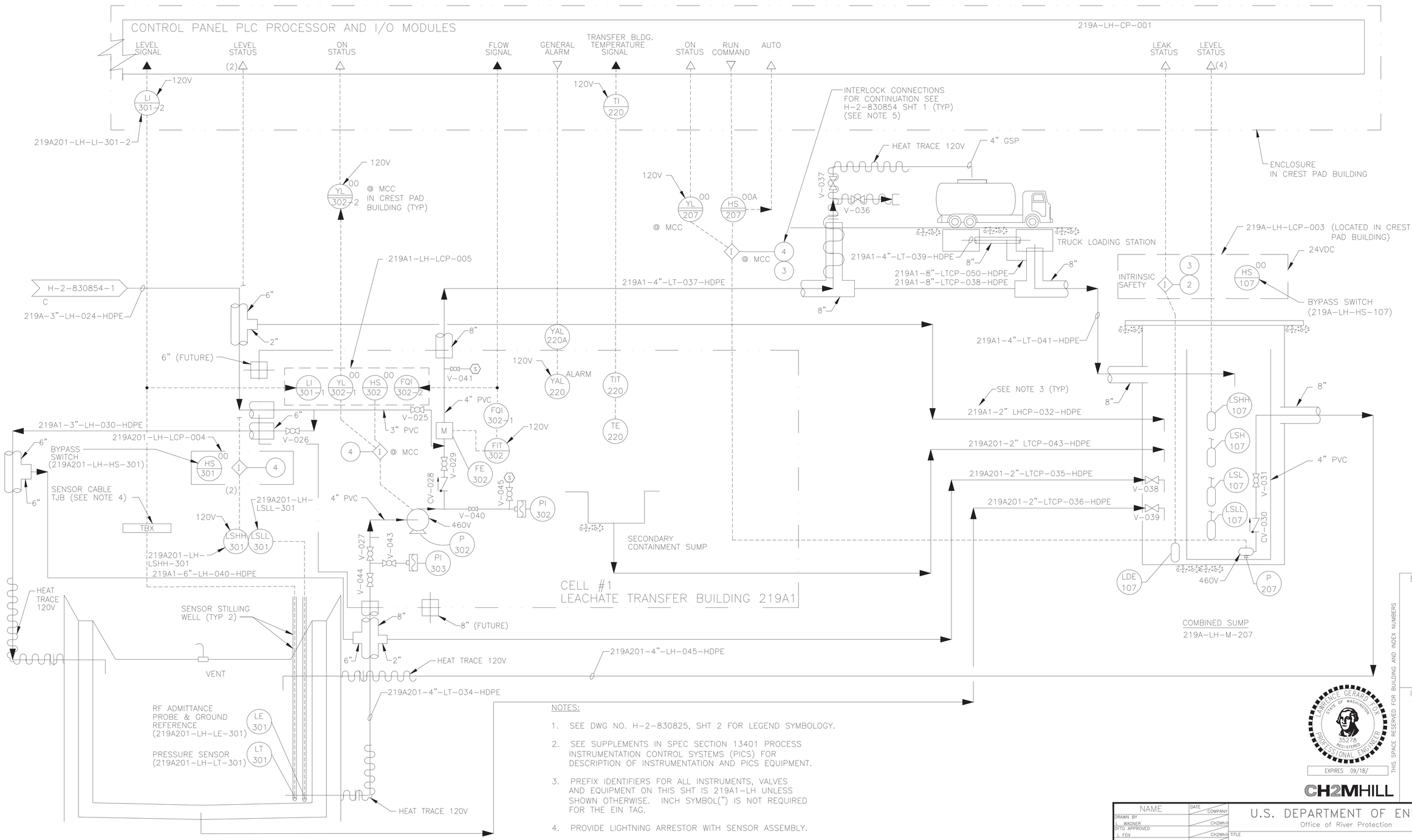

NOTES:

1. SEE DWG NO. H-2-830825, SHT 2 FOR LEGEND SYMBOLOGY.
2. SEE SUPPLEMENTS IN SPEC SECTION 13401 PROCESS INSTRUMENTATION CONTROL SYSTEMS (PICS) FOR DESCRIPTION OF INSTRUMENTATION AND PICS EQUIPMENT.
3. PREFIX IDENTIFIERS FOR ALL INSTRUMENTS, VALVES AND EQUIPMENT ON THIS SHT IS 219A1-LH UNLESS SHOWN OTHERWISE. INCH SYMBOL(") IS NOT REQUIRED FOR THE EIN TAG.
4. PROVIDE LIGHTNING ARRESTOR WITH SENSOR ASSEMBLY.
5. FOR INTERLOCK CONFIGURATIONS SEE SHTS H-2-830857

DWG NO	TITLE	REF NUMBER	TITLE
DRAWING TRACEABILITY LIST		REFERENCES	
		NEXT USED ON	

REV NO	DESCRIPTION	REV BY DATE	ENGR / COMPANY
0	SCH B AS-BUILTS/FCN 100493,100584, 100614, 100617 / ECN 723902 REV 0.	07/05/06	J DEHNER / CH2Mhill

REVISIONS

NAME	DATE	COMPANY
DRAWN BY L WAGNER		CH2Mhill
DFTG APPROVED L FOX		CH2Mhill
ENGINEER H BAUNE		

U.S. DEPARTMENT OF ENERGY
Office of River Protection

TITLE
IDF
CELL #1 P&ID

SIZE	BLDG NO	INDEX NO	DWG NO	REV
D	219A1 219A201	7004	H-2-830854	0

SCALE NONE EDT 822180 SHEET 2 OF

PLOTID ORP_TB_D [12-02].DWG

BLDG. NO.
219A
219A1
219A201
219E
219E1
219E201

INDEX NO.

THIS SPACE RESERVED FOR BUILDING AND INDEX NUMBERS

LAWRENCE GERARD FOX STATE OF WASHINGTON 35278 REGISTERED PROFESSIONAL ENGINEER
EXPIRES 09/18/

CH2MHILL

PAGE 17 SKETCH-007

WAS ECR-18-001801

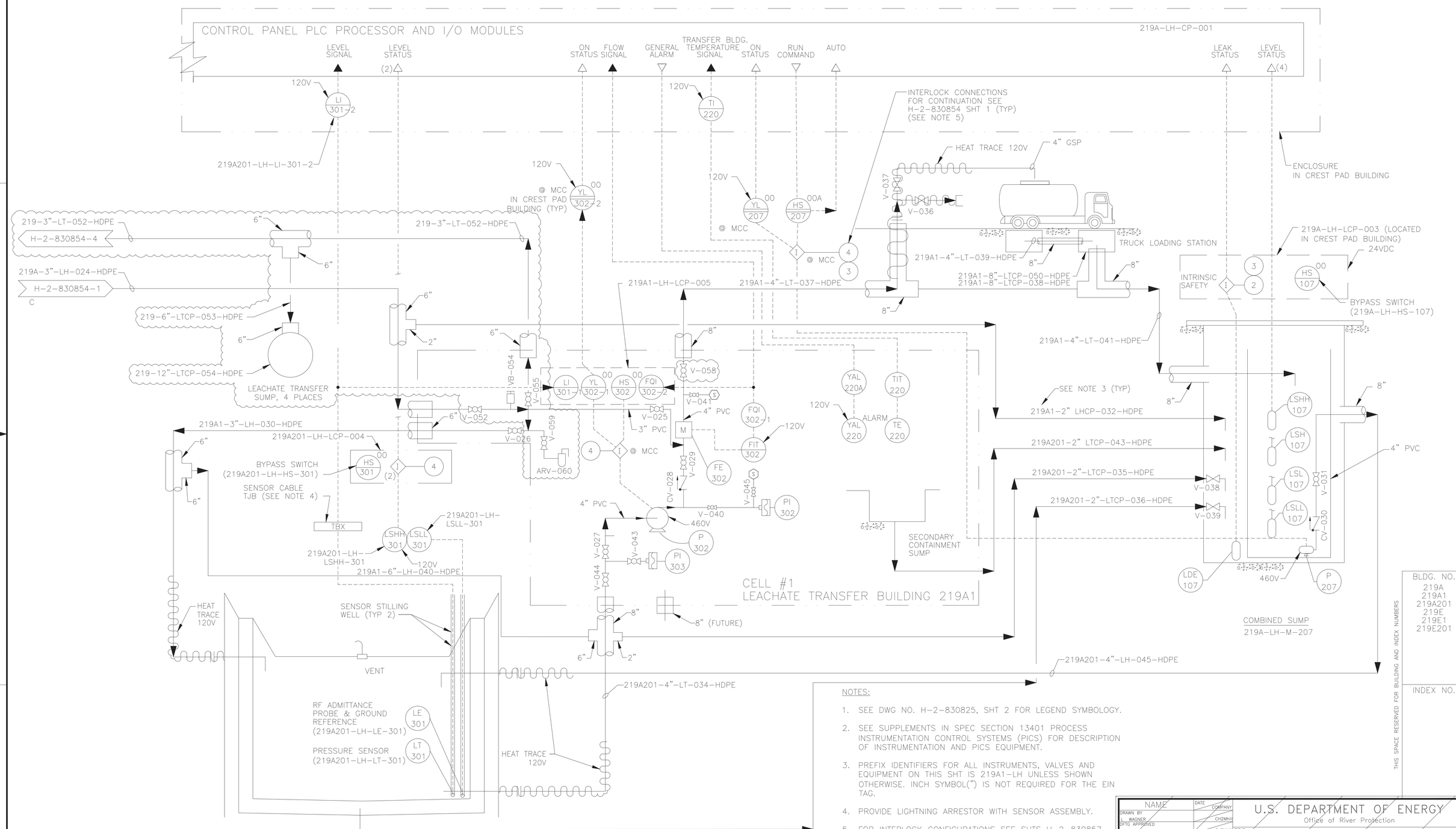

NOTES:

1. SEE DWG NO. H-2-830825, SHT 2 FOR LEGEND SYMBOLOGY.
2. SEE SUPPLEMENTS IN SPEC SECTION 13401 PROCESS INSTRUMENTATION CONTROL SYSTEMS (PICS) FOR DESCRIPTION OF INSTRUMENTATION AND PICS EQUIPMENT.
3. PREFIX IDENTIFIERS FOR ALL INSTRUMENTS, VALVES AND EQUIPMENT ON THIS SHT IS 219A1-LH UNLESS SHOWN OTHERWISE. INCH SYMBOL(") IS NOT REQUIRED FOR THE EIN TAG.
4. PROVIDE LIGHTNING ARRESTOR WITH SENSOR ASSEMBLY.
5. FOR INTERLOCK CONFIGURATIONS SEE SHTS H-2-830857.

LEACHATE TANK
219A201

DWG NO	TITLE	REF NUMBER	TITLE
		REFERENCES	
DRAWING TRACEABILITY LIST		NEXT USED ON	

REV Ref	MFD	REV NO	DESCRIPTION	REV BY DATE		ENGR	COMPANY
		1	REVISED PER ECR-18-001801				
		0	SCH B AS-BUILTS/FCN 100493,100584,100614, 100617 / ECN 723902 REV 0.	07/05/06		J DEHNER	CH2Mhill

REVISIONS

NAME	DATE	COMPANY
DRAWN BY L WAGNER		CH2Mhill
DFTG APPROVED J FOX		CH2Mhill
DESIGN AUTHORITY M BAUNE		

U.S. DEPARTMENT OF ENERGY
Office of River Protection

TITLE
IDF
CELL #1 P&ID

SIZE	BLDG NO	INDEX NO	DWG NO	REV
D	219A1 219A201	7004	H-2-830854	1
SCALE NONE	EDT 822810		SHEET 2 OF	

BLDG. NO.
219A
219A1
219A201
219E
219E1
219E201

INDEX NO.

THIS SPACE RESERVED FOR BUILDING AND INDEX NUMBERS

IS ECR-18-001801 PAGE 18 SKETCH-007

ORP_TB_D 112-02[.DWG]

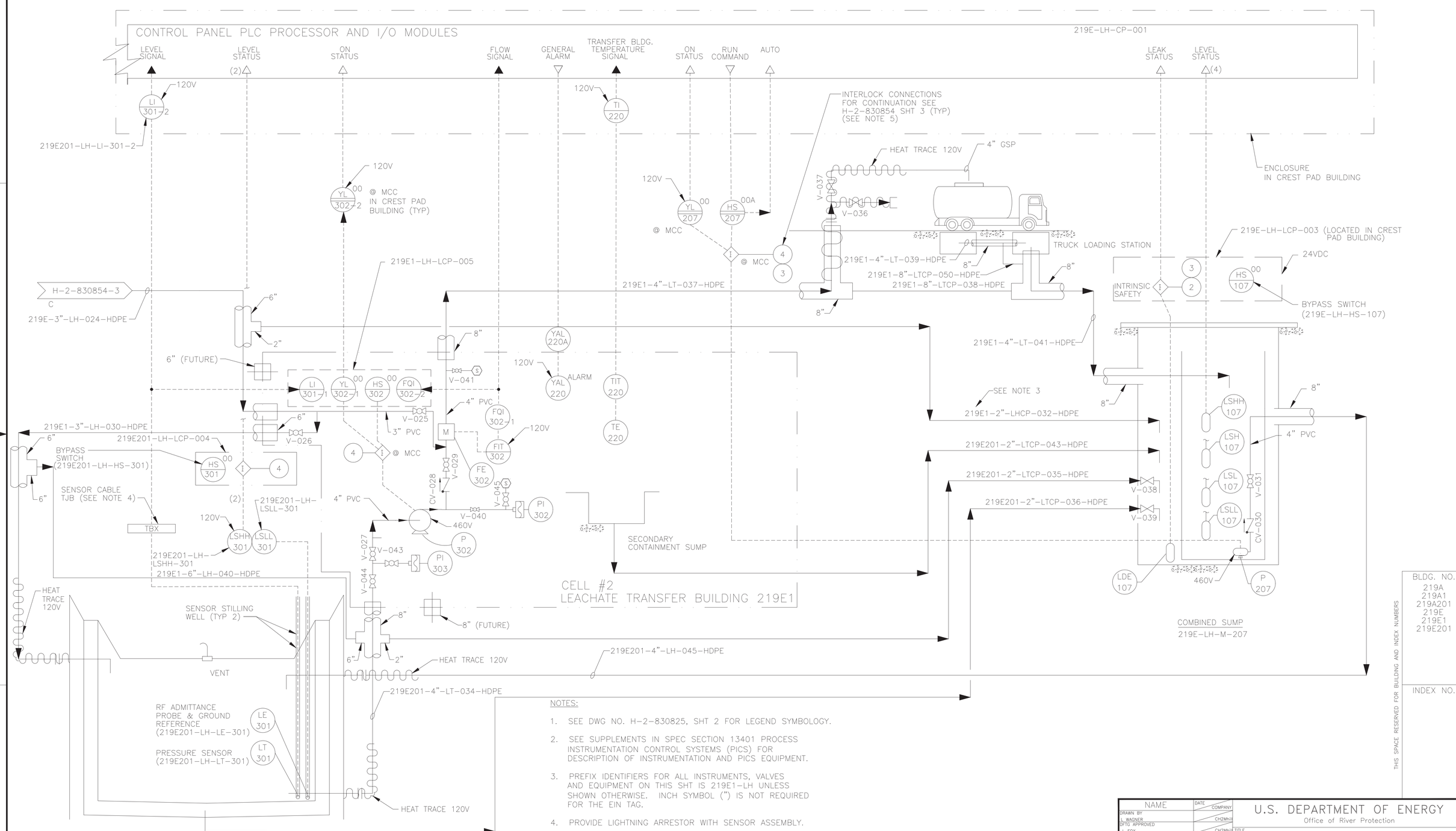

NOTES:

1. SEE DWG NO. H-2-830825, SHT 2 FOR LEGEND SYMBOLOGY.
2. SEE SUPPLEMENTS IN SPEC SECTION 13401 PROCESS INSTRUMENTATION CONTROL SYSTEMS (PICS) FOR DESCRIPTION OF INSTRUMENTATION AND PICS EQUIPMENT.
3. PREFIX IDENTIFIERS FOR ALL INSTRUMENTS, VALVES AND EQUIPMENT ON THIS SHT IS 219E1-LH UNLESS SHOWN OTHERWISE. INCH SYMBOL (") IS NOT REQUIRED FOR THE EIN TAG.
4. PROVIDE LIGHTNING ARRESTOR WITH SENSOR ASSEMBLY.
5. FOR INTERLOCK CONFIGURATIONS SEE SHTS H-2830857 AND H-2-830863.

DWG NO	TITLE	REF NUMBER	TITLE
DRAWING TRACEABILITY LIST		NEXT USED ON	REFERENCES

REV NO	DESCRIPTION	REV BY DATE	ENGR COMPANY
1	REVISED PER ECN 724712-R0	RLM 6/07	

REVISIONS

NAME	DATE	COMPANY
DRAWN BY L. WAGNER		CH2MHill
OPTG APPROVED L. FOX		CH2MHill
ENGINEER H. BAUNE		

U.S. DEPARTMENT OF ENERGY
Office of River Protection

TITLE
IDF
CELL #2 P&ID

SIZE	BLDG NO	INDEX NO	DWG NO	REV
D	219A	7004	H-2-830854	1

SCALE NONE EDT 822180 SHEET 4 OF

BLDG. NO.
219A
219A1
219A201
219E
219E1
219E201

INDEX NO.

THIS SPACE RESERVED FOR BUILDING AND INDEX NUMBERS

PLOTID ORP_TB_D 112-02LDWG

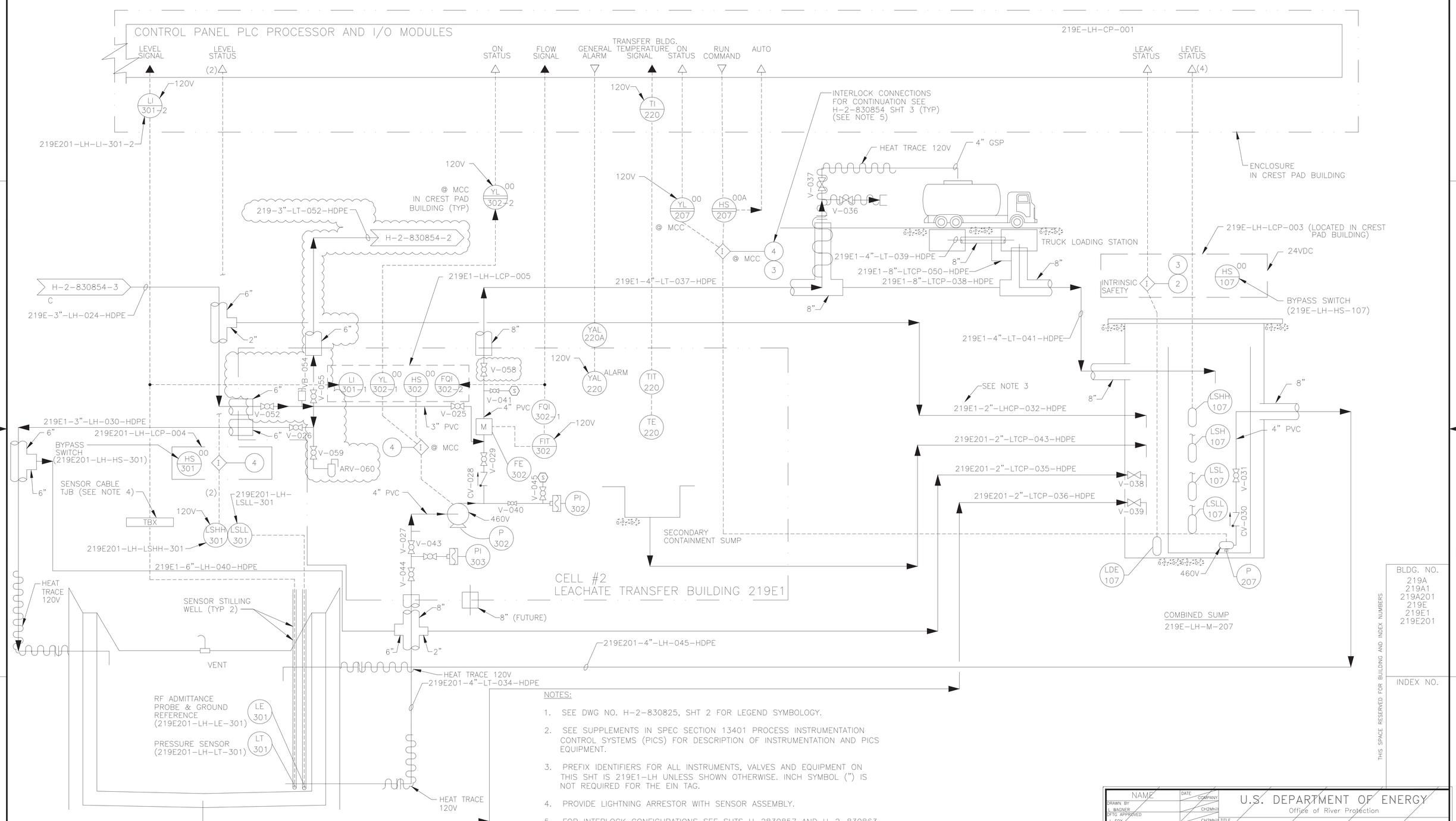

NOTES:

1. SEE DWG NO. H-2-830825, SHT 2 FOR LEGEND SYMBOLOGY.
2. SEE SUPPLEMENTS IN SPEC SECTION 13401 PROCESS INSTRUMENTATION CONTROL SYSTEMS (PICS) FOR DESCRIPTION OF INSTRUMENTATION AND PICS EQUIPMENT.
3. PREFIX IDENTIFIERS FOR ALL INSTRUMENTS, VALVES AND EQUIPMENT ON THIS SHT IS 219E1-LH UNLESS SHOWN OTHERWISE. INCH SYMBOL (") IS NOT REQUIRED FOR THE EIN TAG.
4. PROVIDE LIGHTNING ARRESTOR WITH SENSOR ASSEMBLY.
5. FOR INTERLOCK CONFIGURATIONS SEE SHTS H-2830857 AND H-2-830863.

DWG NO	TITLE	REF NUMBER	TITLE
DRAWING TRACEABILITY LIST		NEXT USED ON	REFERENCES

REV NO	DESCRIPTION	REV BY DATE	ENGR	COMPANY
2	REVISED PER ECR-18-001801			
1	REVISED PER ECN 724712-R0	RLM 6/07		

REVISIONS

NAME	DATE	COMPANY
DRAWN BY L. WAGNER		CH2MHill
DFTG APPROVED L. FOX		CH2MHill
ENGINEER H. BAUNE		

U.S. DEPARTMENT OF ENERGY
Office of River Protection

TITLE: IDF CELL #2 P&ID

SIZE	BLDG NO	INDEX NO	DWG NO	REV
D	219A	7004	H-2-830854	2

SCALE NONE EDT 822180 SHEET 4 OF

PLOTID ORP_TB_D 112-02LDWG

BLDG. NO.
219A
219A1
219A201
219E
219E1
219E201

INDEX NO.

THIS SPACE RESERVED FOR BUILDING AND INDEX NUMBERS

PAGE 20 SKETCH-008

IS ECR-18-001801

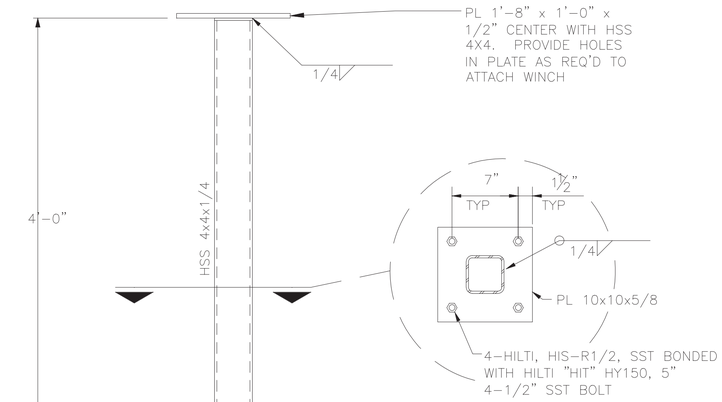

NOTE:
1. PAINT PER SPECIFICATIONS
2. FOR WINCH SEE H-2-830847, NOTE 6
3. TWO WINCH SUPPORT REQUIRED FOR THREE ANCHOR LOCATIONS.
4. PROVIDE HEADLESS THREADED SST STUDS WITH PHILLIPS INDENTATION TO REMOVE STUDS FOR THREE ANCHOR LOCATIONS.
5. EQUIPMENT IDENTIFICATION NUMBERS (EINS) FOR THE PUMP REMOVAL WINCHES ARE SHOWN BELOW:
WINCH EIN
LOW FLOW PUMP RETRIEVAL WINCH 219(Y)-LH-W-202
HIGH FLOW PUMP RETRIEVAL WINCH 219(Y)-LH-W-203

WINCH SUPPORT (1)
1 1/2"=1'-0"
H-2-830865
H-2-830847

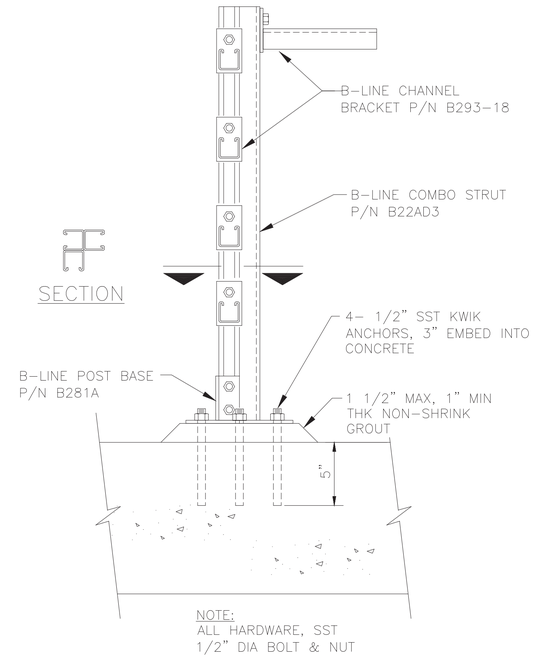

NOTE:
ALL HARDWARE, SST
1/2" DIA BOLT & NUT

PVC PIPE SUPPORT (TYPE 1) (3)
NTS
H-2-830847
H-2-830851

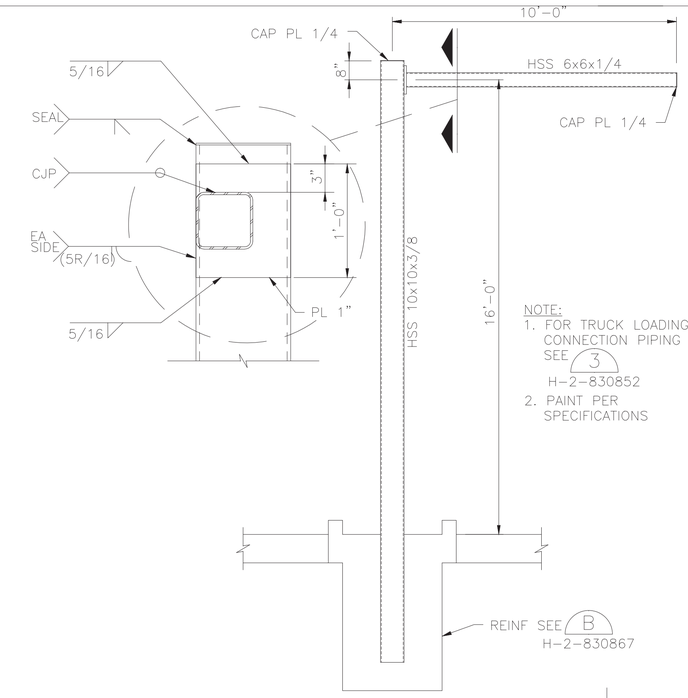

NOTE:
1. FOR TRUCK LOADING CONNECTION PIPING SEE (3) H-2-830852
2. PAINT PER SPECIFICATIONS

TRUCK LOADING CONNECTION (2)
3/8"=1'-0"
H-2-830867
H-2-830852

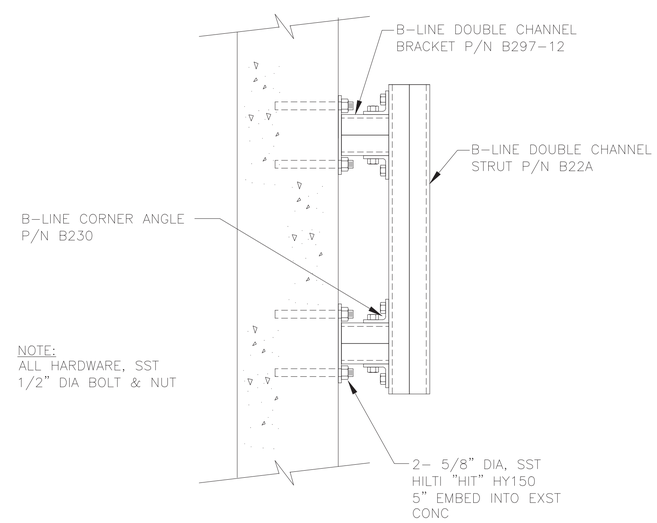

NOTE:
ALL HARDWARE, SST
1/2" DIA BOLT & NUT

PVC PIPE SUPPORT (TYPE 2) (4)
NTS
H-2-830847

DWG NO	TITLE
DRAWING TRACEABILITY LIST	

REF NUMBER	TITLE
NEXT USED ON	REFERENCES

REV Rel	REV NO	DESCRIPTION	REV BY DATE	ENGR	COMPANY
	0	SCH B AS-BUILTS FCN 100486, 100537 & 100579, ECN 723901 REV 0	5/12/06	E THOMAS	CH2Mhill

REVISIONS

NAME	DATE	COMPANY
DRAWN BY D. KENDALL		CH2Mhill
DFTG APPROVED S. GOTO		CH2Mhill
ENGINEER H. BAUNE		

U.S. DEPARTMENT OF ENERGY
Office of River Protection

TITLE
IDF STRUCTURAL DETAILS

SIZE	BLDG NO	INDEX NO	DWG NO	REV
D	219A201 219E201	0900	H-2-830872	0

SCALE AS SHOWN EDT 822158 SHEET 1 OF 1

PLOTID ORP_TB_D 112-02L.DWG

BLDG. NO.

INDEX NO.

THIS SPACE RESERVED FOR BUILDING AND INDEX NUMBERS

STEVEN J. GOTO STATE OF WASHINGTON 35654 REGISTERED PROFESSIONAL ENGINEER
EXPIRES 7/27/

CH2MHILL

PAGE 21 SKETCH-009

WAS ECR-18-001801

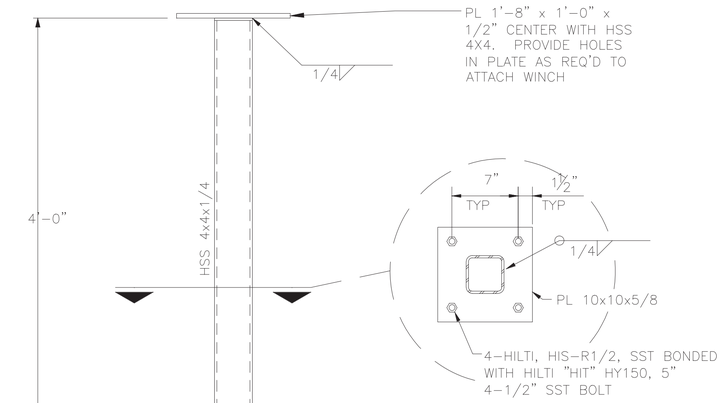

NOTE:
1. PAINT PER SPECIFICATIONS
2. FOR WINCH SEE H-2-830847, NOTE 6
3. TWO WINCH SUPPORT REQUIRED FOR THREE ANCHOR LOCATIONS.
4. PROVIDE HEADLESS THREADED SST STUDS WITH PHILLIPS INDENTATION TO REMOVE STUDS FOR THREE ANCHOR LOCATIONS.
5. EQUIPMENT IDENTIFICATION NUMBERS (EINS) FOR THE PUMP REMOVAL WINCHES ARE SHOWN BELOW:
WINCH EIN
LOW FLOW PUMP RETRIEVAL WINCH 219(Y)-LH-W-202
HIGH FLOW PUMP RETRIEVAL WINCH 219(Y)-LH-W-203

WINCH SUPPORT (1)
1 1/2"=1'-0"
H-2-830865
H-2-830847

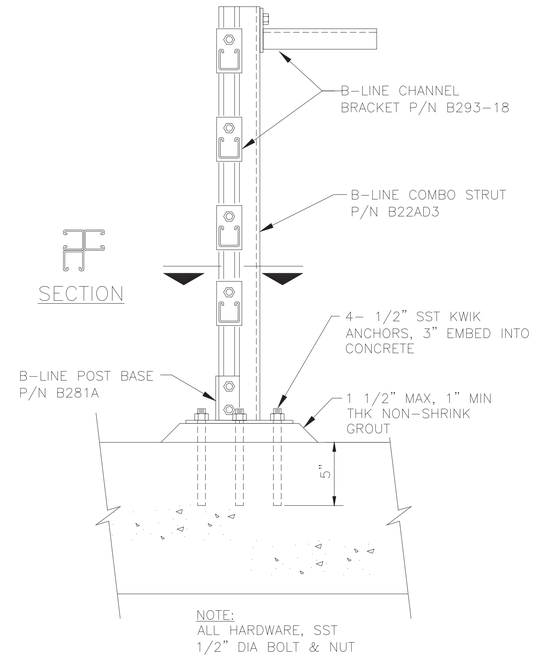

NOTE:
ALL HARDWARE, SST
1/2" DIA BOLT & NUT

PVC PIPE SUPPORT (TYPE 1) (3)
NTS
H-2-830847
H-2-830851

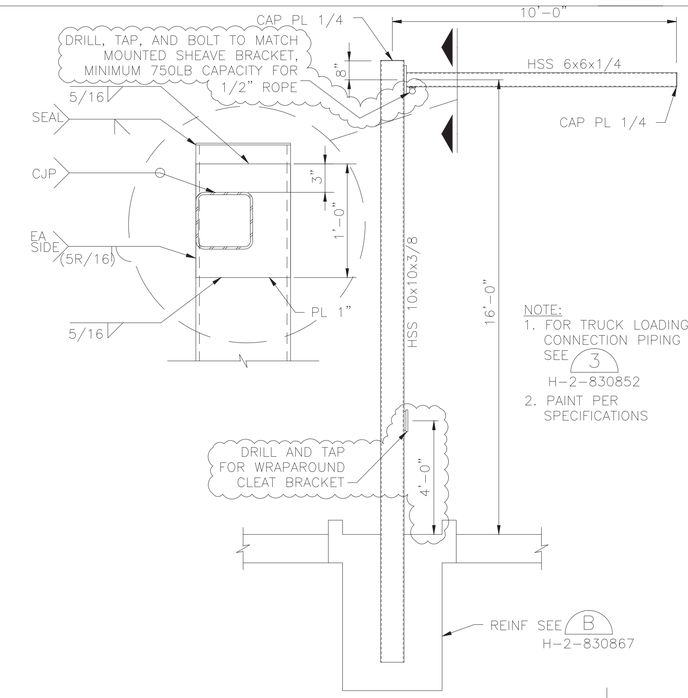

NOTE:
1. FOR TRUCK LOADING CONNECTION PIPING SEE (3) H-2-830852
2. PAINT PER SPECIFICATIONS

TRUCK LOADING CONNECTION (2)
3/8"=1'-0"
H-2-830867
H-2-830852

NOTE:
1. BOLT DIAMETER FOR SHEAVE AND CLEAT BRACKET SHALL NOT EXCEED THICKNESS OF HSS.

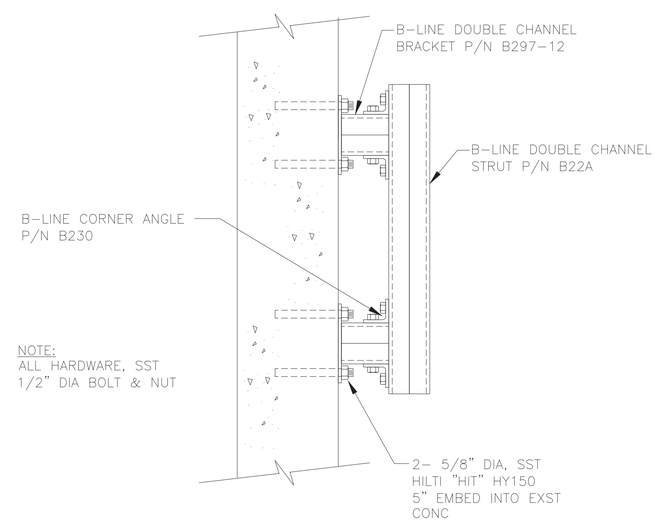

NOTE:
ALL HARDWARE, SST
1/2" DIA BOLT & NUT

PVC PIPE SUPPORT (TYPE 2) (4)
NTS
H-2-830847

DWG NO	TITLE
DRAWING TRACEABILITY LIST	

REF NUMBER	TITLE
NEXT USED ON	REFERENCES

REV Rel	MFD	REV NO.	DESCRIPTION	REV BY DATE		ENGR	COMPANY
		1	REVISED PER ECR-18-001801				
		0	SCH B AS-BUILTS FCN 100486, 100537 & 100579, ECN 723901 REV 0	5/12/06		E THOMAS	CH2Mhill

REVISIONS

NAME	DATE	COMPANY
DRAWN BY D. KENDALL		CH2Mhill
DFTG APPROVED S. GOTO		CH2Mhill
ENGINEER M. BAUNE		

TITLE
U.S. DEPARTMENT OF ENERGY
Office of River Protection
IDF
STRUCTURAL DETAILS

SIZE	BLDG NO	INDEX NO	DWG NO	REV
D	219A201 219E201	0900	H-2-830872	1

SCALE AS SHOWN EDT 822158 SHEET 1 OF 1

BLDG. NO.
INDEX NO.
THIS SPACE RESERVED FOR BUILDING AND INDEX NUMBERS

PLOTID
ORP_TB_D [12-02].DWG

IS ECR-18-001801
PAGE 22 SKETCH-009

ENGINEERING DATA TRANSMITTAL

1. EDT 822089

1A. Page 1 of 1

2. To: (Receiving Organization) Distribution	3. From: (Originating Organization) K. A. Colosi	4. Related EDT No.: 822018
		5. Structure Location: N/A
6. Proj./Prog./Dept./Div.: Integrated Disposal Facility	7. Responsible Engineer/Design Agent: D. C. Comstock	8. System Designator: N/A
		9. Building No.: N/A

10. Originator Remarks:
The Independent Qualified Registered Professional Engineer (IQRPE) Design Assessment Report for the Integrated Disposal Facility (IDF), tank system assessment for cell 2, is being approved and released. This report will support the facilities ability to permit through RCRA, cell 2 should the need arise.

11. Equipment ID No. (EIN): N/A

12. Permit/Permit Application No.: Integrated Disposal Facility

13. USQ No.: N/A Date: ☐ N/A	13(A). TBDs or HOLDs In the Data Transmitted? ☐ Yes ☐ No 13(B). Project Number or Identifier: Integrated Disposal Facility	14. Purchase Order No.: N/A 15. Required Response Date: ASAP

16. DATA TRANSMITTED

(A) Item No.	(B) Document/Drawing No.	(C) Sheet No.	(D) Rev. No.	(E) Title or Description of Data Transmitted	(F) Hard-copy or PDF	(G) Approval Designator	(H) Reason for Transmittal	(I) Originator Disposition	(J) Receiver Disposition
1	RPP-RPT-27414	n/a	0	IQRPE Design Assessment Report, Cell 2	h	Q,E	1	1	1

17. IMPACTED DOCUMENTS – NON ENGINEERING		18. IMPACTED DOCUMENTS – ENGINEERING	
Type of Document	Document Number	Type of Document	Document Number
N/A	N/A	N/A	N/A

19. KEY

Approval Designator (G)	Reason for Transmittal (H)	Disposition (I)
See TFC-ESHQ-Q-INSP-C-05	1. Approval 2. Review 3. Distribution	1. Approved 2. Approved w/comment 3. Reviewed no comment 4. Reviewed w/comment 5. Disapproved

20. SIGNATURE/DISTRIBUTION

(H) Reason	(I) Disp.	(J) Name	(K) Signature	(L) Date	(M) MSIN	(H) Reason	(I) Disp.	(J) Name	(K) Signature	(L) Date	(M) MSIN
1	1	Originator K. A. Colosi	KA Colosi	2/2/06	S7-67	3	N/A	P.E. LaMont			H6-60
1	1	Resp. Engr. D. C. Comstock	DC	2/16/06	S7-67	3	N/A	G. M. Ramin			H6-60
1	1	Resp. Mgr. G. L. Parsons	GL Parsons	2-2-06	S7-67			EDE Project Files (E Wickstrand)			R1-29
1	1	QA D. D. Carson	D. D. Carson	2/15/06	R2-87						
NA	NA	IH&S Engr. NA									
1	1	Env. Engr. T. Wooley	TA Wooley	2/15/06	H6-03						

21. DOE APPROVAL (if required)

Ctrl. No. N/A

22. Release Date/Station/ID FEB 16 2006 STA: 15 (65)

BD-7400-172.2 (12/0

IQRPE Design Assessment Report, Cell 2

K. A. Colosi, D. C. Comstock
CH2M HILL Hanford Group, Inc.
Richland, WA 99352
U.S. Department of Energy Contract DE-AC27-99RL14047

EDT/ECN: EDT-822089 UC:
Cost Center: 7G700 Charge Code:
B&R Code: Total Pages: 79

Key Words: Integrated Disposal Facility, IDF, Tank Assessment, IQRPE, Independent Qualified Registered Professional Engineer, Cell 2

Abstract: This report is an independent assesssment of the tank system design for cell 2 of the Integrated Disposal Facility (IDF) as required by the WAC 173-303-640 for design of tank systems.

TRADEMARK DISCLAIMER. Reference herein to any specific commercial product, process, or service by trade name, trademark, manufacturer, or otherwise, does not necessarily constitute or imply its endorsement, recommendation, or favoring by the United States Government or any agency thereof or its contractors or subcontractors.

Printed in the United States of America. To obtain copies of this document, contact: Document Control Services, P.O. Box 950, Mailstop H6-08, Richland WA 99352, Phone (509) 372-2420; Fax (509) 376-4989.

FEB 16 2006
DATE:
STA: 15
HANFORD RELEASE
ID: 65

Janis Aardal 2/16/06
Release Approval Date

Release Stamp

Approved For Public Release

Independent Qualified Registered Professional Engineer Design Assessment Report For The Integrated Disposal Facility (IDF) Leachate Tank System (Cell 2)

CH2M HILL Requisition # 116229

IQRPE Design Assessment Report No. DR-102, Rev. 0

Prepared by:

Roger H. Webb, PE
PRL Enterprises, LLC
2115 Blue Jay Lane
West Richland, WA 99353
For
TechnoGeneral Services Company

Reviewed by:

Karl M. Walterskirchen, PE, Chief Engineer
TechnoGeneral Services Company
710 N. 4th Avenue
Pasco, Washington 99301

At the request of

CH2M HILL Hanford Group, Inc.
PO Box 1500
Richland, Washington 99352

January 24, 2006

Table of Contents

1.0 INTRODUCTION 4
1.1 Project Description 4
1.2 Design Review Requirements 7
1.3 Scope 7
1.4 Out-of-Scope 7
1.5 Leachate Tank System Design Overview 8
1.5.1 High Density Polyethylene (HDPE) Underground Transfer Pipe 9
1.5.2 Crest Pad Building and Ancillary Equipment 12
1.5.3 Combined Sump and Ancillary Equipment 13
1.5.4 Leachate 90-Day Accumulation Tank 14
1.5.5 Leachate Transfer Building and Ancillary Equipment 14
1.5.6 Truck Loadout Station 15

2.0 ASSESSMENT 16
2.1 Codes, Standards and Regulations 17
2.2 Basis of Design 17
2.2.1 Structural Design Standards 17
2.2.2 Waste Compatibility 22
2.2.3 Pressure Control System 23
2.2.4 Secondary Containment System 25
2.2.5 Ancillary Equipment Design 29
2.2.6 Corrosion Assessment 30
2.2.7 Recommended Inspection Schedule 30

3.0 DESIGN REVIEW ASSESSMENT CERTIFICATIONS 32

4.0 REFERENCES 33

Figures

Figure 1. Location of Integrated Disposal Facility 5

Figure 2. Graphical Overview of Leachate Tank System 6

Figure 3. Leachate Tank System -- Plan View 9

Figure 4. IDF Leachate Process Flow Diagram (page 1) 10

Figure 5. IDF Leachate Process Flow Diagram (page 2) 11

Attachments

A Leachate Tank System IQRPE Disposition of Calculations, Specifications, Drawings, and Other Reports

B Environmental Restoration Disposal Facility (ERDF) Leachate Tank System Lessons Learned

C Material Compatibility Assessment

D IQRPE Civil / Structural Verification Calculations

1.0 INTRODUCTION

CH2M HILL Hanford Group, Inc. has requested TechnoGeneral Services Company (TGS) to perform an Independent Qualified Registered Professional Engineer (IQRPE) design assessment and certification for Cell 2 of the Integrated Disposal Facility (IDF) Leachate Tank System. The design assessment and certification is based the requirements of Washington Administrative Code (WAC) 173-303-640 (Tank Systems), and is documented through this Design Assessment Report. TGS has prepared this IQRPE Design Assessment Report in conjunction with PRL Enterprises, LLC, at the request of CH2M HILL Hanford Group, Inc. TGS is the IQRPE of record for this project.

1.1 Project Description

The IDF is designed to provide the capability for near-surface disposal of Immobilized Low-Activity Waste (ILAW) waste packages primarily from the River Protection Project-Waste Treatment Plant (RPP-WTP). Mixed waste disposed at the IDF will be limited to vitrified low-activity waste (LAW) from the RPP-WTP and the Demonstration Bulk Vitrification System (DBVS). Vitrified LAW generated by RPP-WTP is known as Immobilized Low Activity Waste (ILAW). The LAW generated by DBVS is known as bulk vitrified waste. Additionally, mixed waste generated by IDF operations will be disposed of in the IDF.

The IDF is located in southeastern Washington state on the Hanford site in the 200 East area (See Figure 1) and is essential to support the overall U.S. Department of Energy-Office of River Protection (DOE-ORP) mission to store, retrieve, treat, and dispose of the radioactive Hanford tank waste in an environmentally sound, safe, and cost-effective manner.

The final Cell 1 and Cell 2 IDF dimensional configuration is trapezoidal with the floor being 1385 ft by 1085 ft; the top of the 3.0 ft operational layer being 1645 ft by 1345 ft; and the depth being approximately 43 ft. The IDF will be constructed in several phases. Starting at the northern edge, approximately one-third of the total length of the landfill will be constructed in Phase I and will include the leachate collection system and 90-day accumulation tanks. Phase 1 consists of two cells, and both cells are the same design, but Cell 1 must follow RCRA construction requirements, where Cell 2 need not follow RCRA construction requirements. An engineered barrier cap will be constructed over Cells 1 and 2 to minimize the infiltration of rainwater. There will be an additional 30 year post-closure monitoring period after closure of the facility.

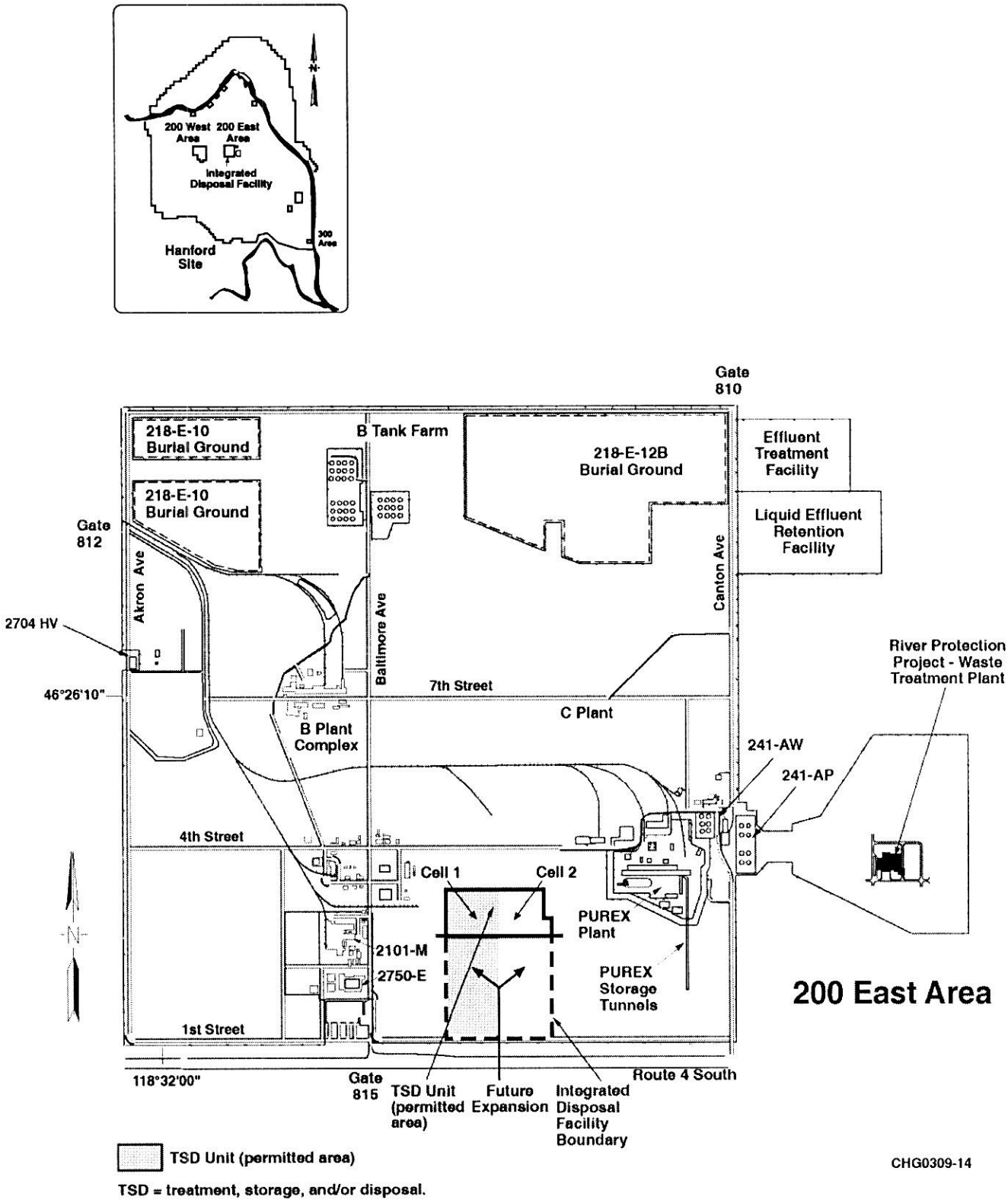

Figure 1. Location of Integrated Disposal Facility

The design assessment for the IDF Leachate Tank System (Cell 2), hereafter known as the Leachate Tank System, includes the following systems:

- the Leachate Collection and Removal System (LCRS),
- the trench Leak Detection System (LDS), and
- the trench Secondary Leak Detection System (SLDS).

Figure 2 shows a graphical representation of the Leachate Tank System.

This design assessment was performed in accordance with WAC 173-303-640.

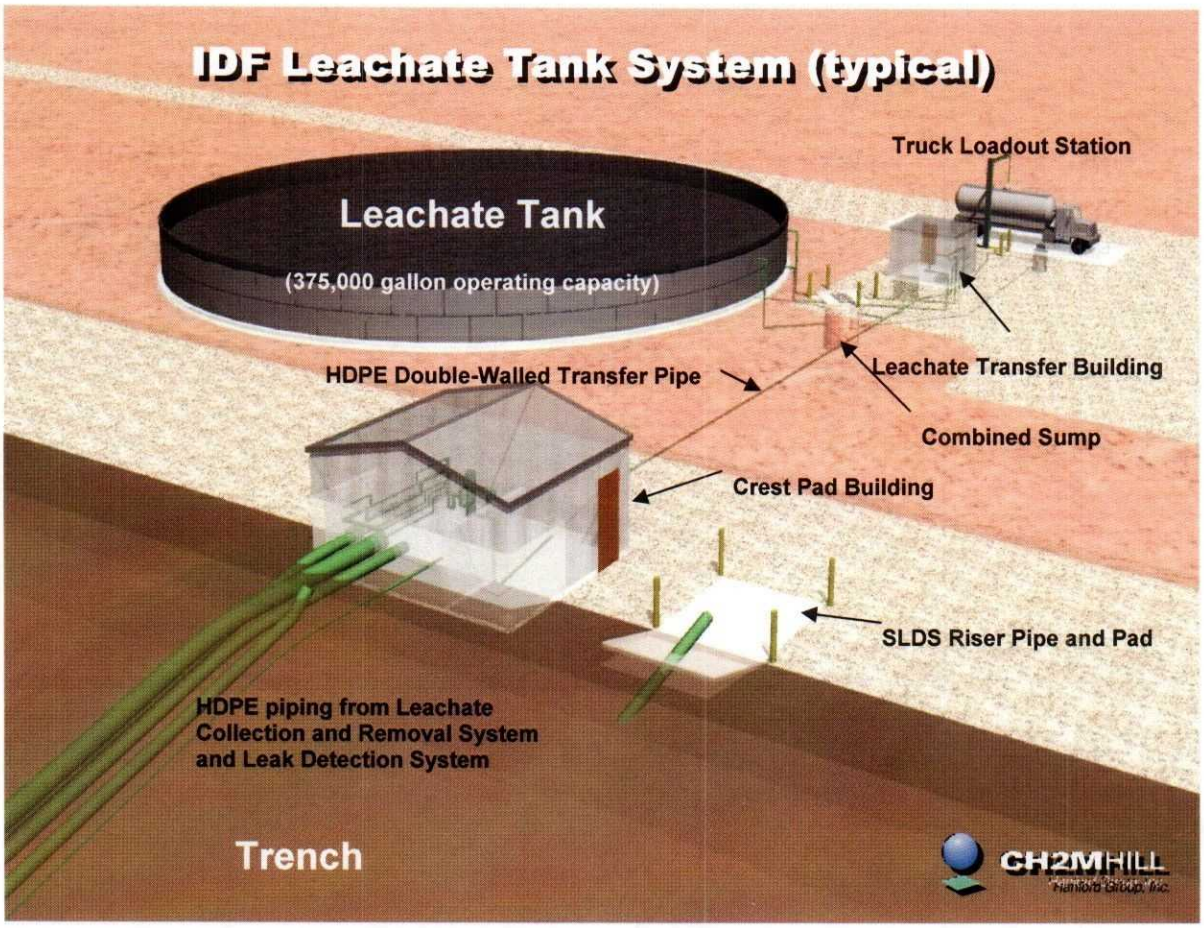

Figure 2. Graphical Overview of Leachate Tank System

1.2 Design Review Requirements

This design assessment addresses the requirements of WAC 173-303-640 (3) and (4). It also meets the guidance given in Ecology Publications 94-114 and 95-420.

1.3 Scope

The scope of this design assessment is an engineering review of the design media (reports, calculations, drawings, and other reports) associated with the Leachate Tank System (Cell 2) with a focus on meeting the WAC 173-303-640 (3) IQRPE design assessment and certification requirements for a new dangerous waste tank system. This assessment includes a review of the design information presented and summarized in Attachment A.

The leachate primary and secondary containment is assessed for the following:

- HDPE underground transfer pipe.
- Crest Pad Building and ancillary equipment.
- Combined Sump and ancillary equipment.
- Leachate 90-day Accumulation Tank.
- Leachate Transfer Building and ancillary equipment.
- Truck Loadout Station.

The IQRPE design assessment and certification of the Leachate Tank System also includes the LCRS, LDS, and SLDS.

1.4 Out-of-Scope

The following items are not covered by the WAC dangerous waste regulations and are therefore outside of the scope of this certification:

- Plant utilities, including instrument and plant air supply lines and electrical power.
- Structural features not related to hazardous waste secondary containment.
- Architectural features not related to hazardous waste containment.
- Lighting systems.
- Heating, ventilation, or air conditioning
- Radiation monitoring or detection components

1.5 Leachate Tank System Design Overview

The Leachate Tank System begins with the collection of leachate originating from precipitation (rain, snow) that has filtered through the disposal area down to a horizontal slotted collection pipe.

The leachate has the potential to pick up dangerous waste properties (including radionuclides from LAW) as it percolates past the waste in the trench. Lateral flow media is built into the cell's bottom and side slope liner system to direct the leachate to the collection pipe in the center of the cell. A sump at the north end of the cell is located where all leachate will drain. Pumps and leachate transfer piping are used to convey leachate out of the cell to the Crest Pad Building. The system is designed to remove the volume of a 1.6 inch precipitation event (which equates to about 25% more than the required 25 year, 24 hour peak day storm event of 1.28 inches) using a high-flow pump. In addition, the design utilizes a low-flow pump to convey leachate out of the cell during normal monthly operations. The criteria established for the low-flow pump was to convey the average monthly flow plus one standard deviation from the cells, assuming the pump could remove that amount of flow with less than continuous operation.

The leachate is then transferred via underground double-walled high-density polyethelene (HDPE) piping to the Leachate 90-Day Accumulation Tank (via the Leachate Transfer Building) for temporary accumulation with it periodically being pumped out via the Leachate Transfer Building to a Truck Loadout Station. Leachate is ultimately trucked out to the Hanford Site 200 Area Effluent Treatment Facility. Figure 3 provides a graphical overview of the Leachate Tank System. All components for Phase I of the leachate collection system are designed and configured for eventual full development of the IDF through Phase IV.

The trench LDS and SLDS are also evaluated in this design assessment report. The LDS is located in a sump beneath the primary trench engineered barrier and functions to detect primary trench barrier leakage. It also has pumping capabilities to pump out leachate through the Crest Pad Building. The SLDS is located beneath another engineered barrier beneath the LDS and functions as its namesake, Secondary Leak Detection System. The SLDS riser does not interface with the Crest Pad Building since a pump and pipe could be inserted if needed and leachate discharge would be pumped directly into a tanker truck. Leachate leakage through two engineered barriers to the SLDS is not considered credible.

The type and configuration of the Leachate Tank System as provided in RPP-18486, Rev. 0, *Integrated Disposal Facility (IDF) Phase I Critical Systems Design – Design Report* has been used successfully at other disposal facilities. A similar facility is being used at the Idaho National Engineering and Environmental Laboratory site near Idaho Falls, Idaho. The Idaho facility will also accept waste with radioactive characteristics and is located in a region with dry weather conditions, similar to Hanford. Lessons learned from these facilities designs have been incorporated into this design (see Attachment B).

The Leachate Tank System includes the major components shown in the following sub-sections. Figure 3 provides the system overview. Figures 4 and 5 identify the scope boundaries for this design assessment and show the leachate process flow paths.

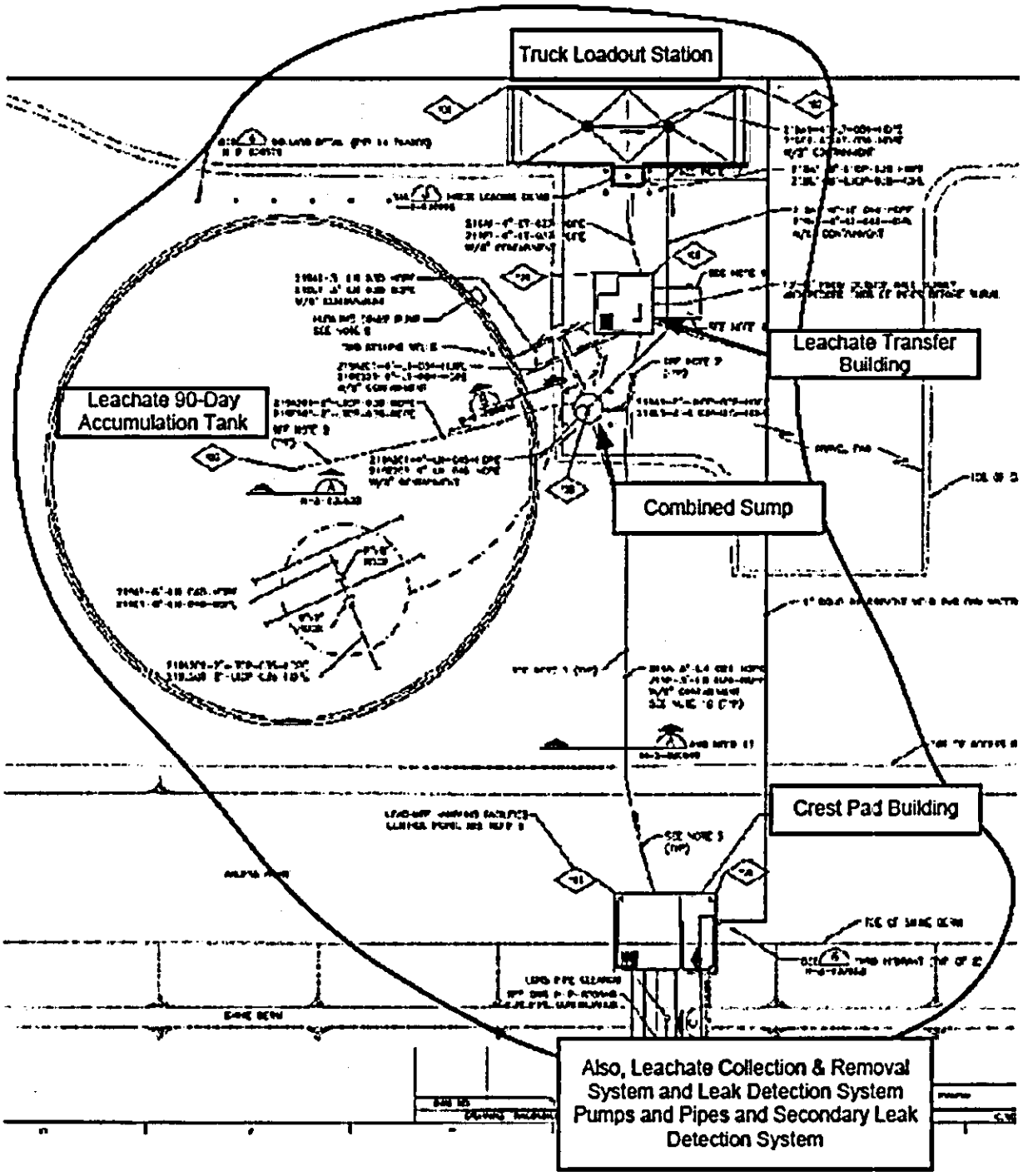

Figure 3. Leachate Tank System – Plan View

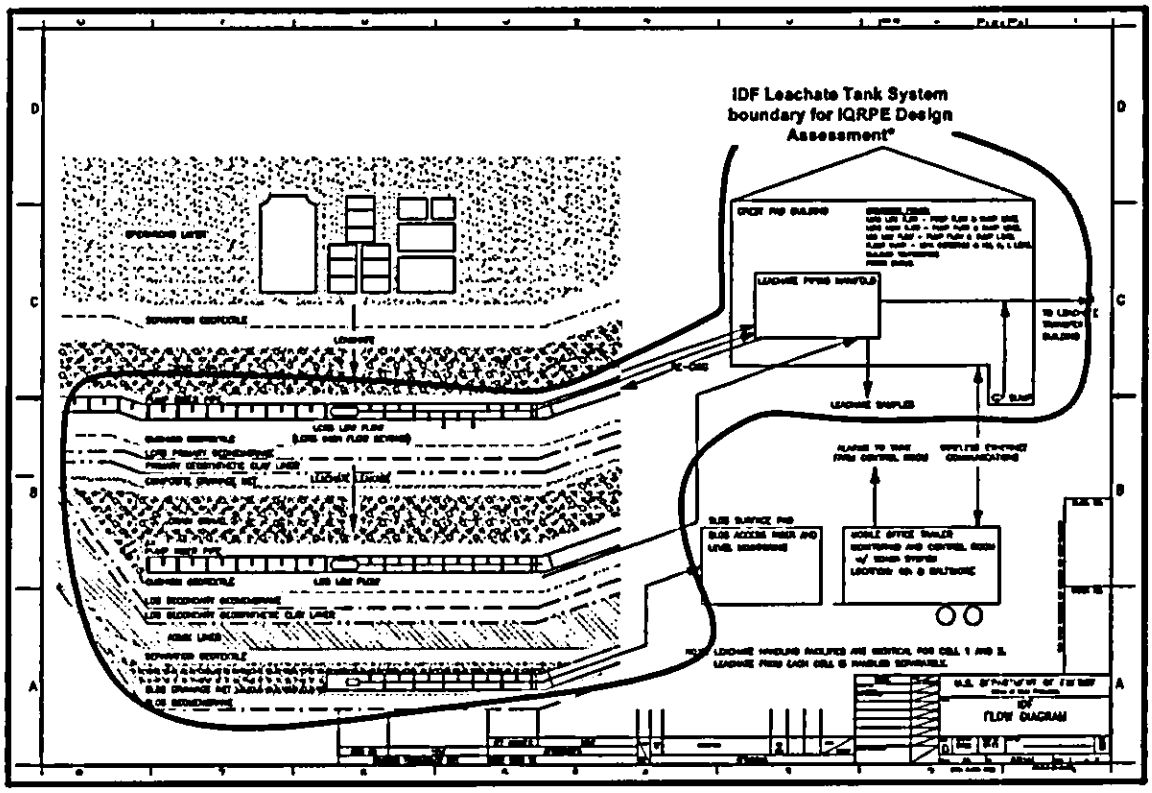

*IQRPE Design Assessment also included Instrumentation and Controls associated with the leak detection system

Figure 4. IDF Leachate Process Flow Diagram (page 1)

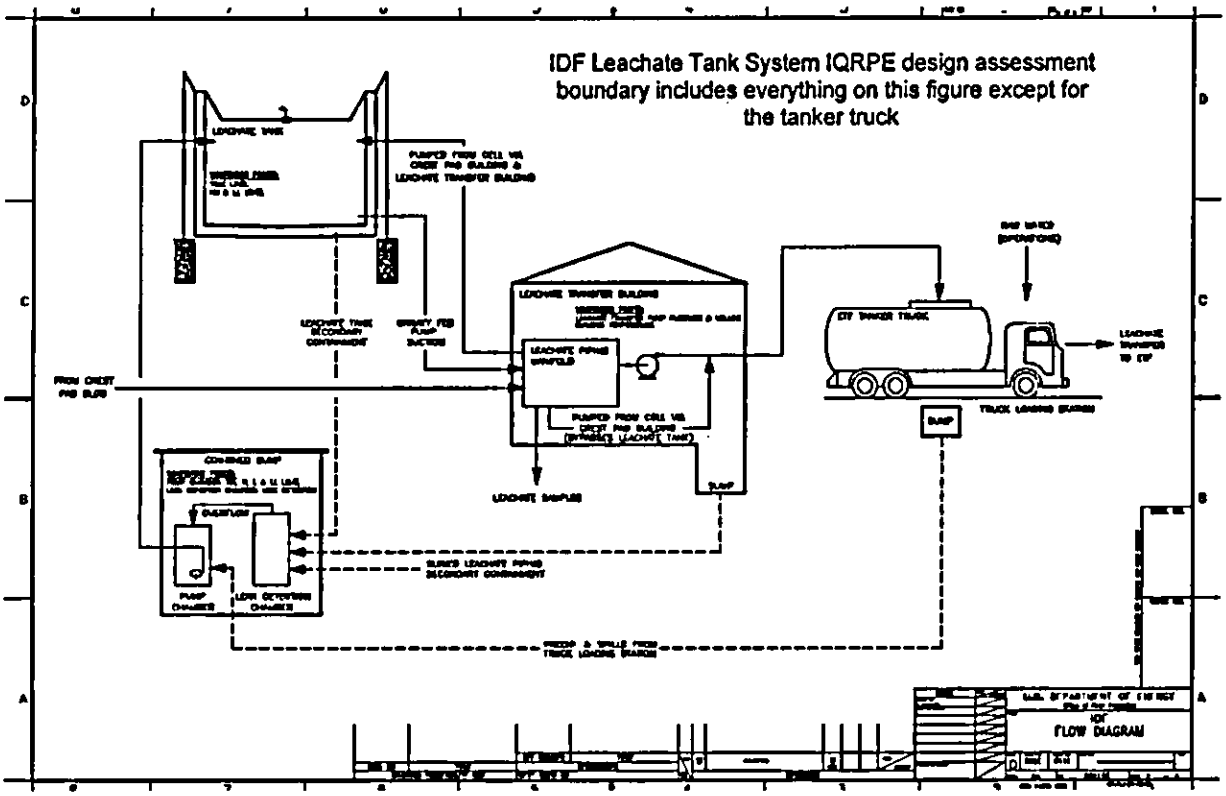

Figure 5. IDF Leachate Process Flow Diagram (page 2)

1.5.1 High Density Polyethylene (HDPE) Underground Transfer Pipe

HDPE double-walled pipe is routed underground to support leachate transfer (routing is from the bottom of cells, to the Crest Pad Building, to the Combined Sump, to the Leachate 90-Day Accumulation Tank, to the Leachate Transfer Building, to the Truck Loadout Station and ancillary sumps).

The material chosen for piping was HDPE made of resin meeting the requirements of ASTM D3350 for polyethelene 3408 material, with a cell classification of 345434C or higher. All HDPE piping will be butt-fused except for transfer piping from associated equipment. HDPE attached to these items that may need to be replaced periodically will be joined with quick release fittings.

It should be noted that piping inside buildings is PVC, schedule 80, with solvent welded fittings. That pipe and classification is rated for higher pressure than required. PVC was chosen for the application inside buildings because of its relative ease of fabrication using the solvent welded fittings.

Flange connections are designed to be used between pumps and piping, valves and other appurtenances and piping, and joints between PVC and HDPE piping. Appurtenances will include air release valves to allow purging of any air trapped in the piping system, magnetic flow meters for measuring flow to the tanker truck load output and to and from the Leachate 90-Day Accumulation Tank, and valves for flow control and diversion of flow between the various facilities.

The LCRS, LDS, and SLDS utilize single-walled HDPE pipe as a conduit to contain smaller piping and attached pumps to move leachate from the bottom of the trench. This configuration is considered double-walled and provides definitive secondary containment.

1.5.2 Crest Pad Building and Ancillary Equipment

The Crest Pad Building is the building located at the top of the trench crest at the north end.

It is an integral part of the Leachate Tank System and functions as described in the design report, Section 6.4.5.1:

> "The leachate pumps within the landfill will be automatically controlled, based on leachate level setpoints within the cell sump. The level transducer that controls the leachate collection and removal system (LCRS) pumps will be inserted into the sump via a slope riser pipe. The level transducer that controls the leak detection system (LDS) pump is integral to the LDS pump. Leachate pumped by the leachate pumps will be monitored by a flow-indicating totalizer within the crest pad building. Controls will be in place to automatically stop the leachate pumps operation if alarm conditions are present for the leachate storage tank high-high level, leak alarm in the crest pad building sump, or a leak alarm in the Combined Sump.

The crest pad building sump pump will be automatically controlled by float switches within the building floor sump. In addition, a leak detection switch will be installed in the floor sump that will be capable of detecting small quantities of water in the sump before the float switches. This feature will add an extra level of conservatism to make sure unexpected spills are identified and controlled immediately. Controls will be in place to automatically stop the crest pad building sump pump operation if alarm conditions are present for the leachate storage tank high-high level or for a leak alarm in the Combined Sump."

The Crest Pad Building is a pre-engineered metal building attached to an 8-inch thick concrete slab situated on a compacted aggregate foundation. The southern end of the building utilizes concrete walls as shielding to minimize Operator radiation exposure resulting from landfill shine.

1.5.3 Combined Sump and Ancillary Equipment

Section 6.4.3.5 of the design report provides the following description:

"The Combined Sump will be a 76-inch-diameter HDPE manhole with a 42 inch diameter HDPE manhole placed inside. The outer manhole will have a height of approximately 8 feet, and the inner manhole height will be approximately 6 feet. The secondary containment portion of all the buried HDPE pipelines, leachate tank, and leachate transfer building floor sump will drain to the annular space (leak detection chamber) between the two manholes. The leak detection chamber will include instrumentation to detect leachate and alarm accordingly. The sumps installed within the truck loading slab typically will collect precipitation that drains off the slab. The precipitation will be conveyed directly to the inner manhole of the Combined Sump, where the Combined Sump pump will be located. The Combined Sump pump then will pump the precipitation to the leachate storage tank.

The Combined Sump pump was sized for a flow capacity of 250 gpm. This large capacity was chosen based on an off-normal event that assumed the tanker truck was overtopped during leachate transfer activities, resulting in 250 gpm flowing into the inner sump. Another off-normal event considered was the remote possibility that the leachate tank primary liner failed catastrophically. This flow of leachate could eventually inundate the leak detection chamber and overflow into the inner manhole.

The hydraulics of the Combined Sump pump were modeled and a pump was selected based on the hydraulic characteristics of the piping system and the required flow rate, identified in the leachate system hydraulics analysis (Section 5.9.2.1). A Hydromatic model SB3S (or equal) with a 3-horsepower motor was selected for the Combined Sump pump."

The Combined Sump performs the following function (as stated in the design report, Section 6.4.5.4):

"The Combined Sump pump will be automatically controlled by float switches within the inner manhole of the Combined Sump. Controls will also be in place to automatically stop the Combined Sump pump operation if alarm conditions are present for the leachate storage tank high-high level. A leak detection switch also will be installed within the leak detection chamber that will be capable of detecting a liquid leak. The leak detection switch will provide a signal to the control system that automatically will shut down all the cell pumps except the Combined Sump pump. The pumps will be shut down because any one of the pipelines associated with the pumps could be leaking into the leak detection chamber. Operations will then need to determine which secondary containment pipeline supplied the water that drained into the leak detection chamber."

1.5.4 Leachate 90-Day Accumulation Tank

The Leachate 90-Day Accumulation Tank is a bolted, corrugated steel tank, approximately 100 feet in diameter with a side wall height of 8 feet 2 inches. The tank is designed to include a dual containment liner system that will act as the floor of the tank and will be bolted to the top of the tank side wall. The tank will be open-topped with a floating geomembrane cover to keep precipitation, debris, and wildlife from contacting the leachate.

The tank side wall is designed to be bolted to a 1.5-foot thick, 4.5-foot-deep concrete ringwall foundation to accommodate the hydrostatic pressure of the leachate. In addition, the top edge of the tank ringwall includes angle bracing, bolted around the tank perimeter to provide rigidity in the side wall to resist wind loads on the exterior of the tank. The maximum operating level of the tank is approximately 6 feet 2 inches; however, the tank is designed for a maximum water level of 8 feet 2 inches. The tank has a working capacity of 375,000 gallons. The volume is based upon the requirements to handle the amount of leachate needed to be removed within 24 hours after a peak storm event (calculated to be 269,000 gallons).

The inlet piping for the tank will be through the side wall of the tank. The inlets are all located near the top of the tank, above the maximum leachate water operating level. This is to ensure that a siphon cannot develop in the inlet piping. Check valves are installed throughout the system.

The outlet pipe for the tank is through the side wall, near the bottom of the tank. This method was chosen to provide a flooded suction for the leachate transfer pump that will provide added protection against pump damage.

1.5.5 Leachate Transfer Building and Ancillary Equipment

A description of the Leachate Transfer Building is taken from the design report Section 6.6.2:

"The leachate transfer building is designed as a pre-engineered, self framing metal building on a slab-on-grade foundation. The metal building is supported on an 8-inch curb that travels continuously around the exterior of the building. The curb is continuous, even through the door threshold, to provide a containment area for the

leachate in case of spillage. In order to maintain conformance with building code requirements, a landing is used to eliminate the curb tripping hazard at the door threshold. Construction joints within this area have waterstops to ensure that leachate cannot egress through the construction joints. Additionally, a sump has been placed to drain the containment area, if required. The entire floor and sump area also is to be coated to provide even greater resistance to the leachate. "

Section 6.4.5.2 of the design report also states:

"The associated leachate transfer pump will be manually controlled except for automatic shut-off during specific alarm events. Controls will be in place to automatically stop the transfer pump operation if alarm conditions are present for the leachate storage tank low-low level or for leak alarm in the Combined Sump. Additional instrumentation (associated with the leachate transfer pump) will include a flow meter (measuring rate and total volume) and transmitter on the discharge of the leachate transfer pump. In addition, a local totalizer will be in the leachate transfer building to know exactly how much water is being transferred to the tanker truck. This totalizer will include a reset function to allow the total to be reset to zero, prior to every truck loading event."

1.5.6 Truck Loadout Station

Section 6.6.3 of the design report provides the following description:

"The truck loading station is designed to receive trucks to load with leachate. The station is essentially a slab-on-grade. The station is designed to contain minor spillage of leachate by sloping the floor slab towards the center and using rounded curbs at the slab entrance and exits. Two sumps will be placed in the center of the station to drain the station as required. The entire floor and sump area also is to be coated to provide even greater resistance to the leachate."

2.0 ASSESSMENT

The Leachate Tank System includes the following major components for IQRPE review:

- HDPE Underground Transfer Pipe (including piping and pumps for the LCRS, the LDS and the trench SLDS piping)
- Crest Pad Building and Ancillary Equipment (see subset)
  - Winch support (to support replacement of LCRS pumps at the bottom of the cell). The LCRS pumps are considered critical items to support a 25 year, 24 hour precipitation event.
  - Sump pump
  - Valves, PVC piping and associated supports as related to the leachate transfer through the Crest Pad Building.
- Combined Sump and Ancillary Equipment (see subset)
  - Inner HDPE manhole (leak detection chamber)
  - Outer sump
  - Submersible pump
  - Valves
- Leachate 90-Day Accumulation Tank (foundation, steel tank structure, primary and secondary liner, floating cover, and tank inlet and outlet connections)
- Leachate Transfer Building and Ancillary Equipment (see subset)
  - Valves, PVC piping and associated supports as related to the leachate transfer through the Leachate Transfer Building.
- Truck Loadout Station
  - Foundation
  - Truck Loading Connection
  - Drains and drain covers

The IQRPE has segregated the design assessment into subsections of the following categories as required by the WAC regulations:

- Structural Design Standards
- Waste Compatibility
- Pressure Control
- Secondary Containment
- Ancillary Equipment Design

- Corrosion Assessment

2.1 Codes, Standards and Regulations

The codes, standards, and regulations specifically used during the preparation of this certification are referenced as necessary throughout this report.

A complete list of codes, standards, and regulations which were reviewed as part of this design assessment is included as Attachment A. This list originated from the IDF design report and Technical Specifications.

There are no flammable gas concerns within the Leachate Tank System.

The IQRPE concurs with the use of the codes, standards, and regulations that have been specified.

2.2 Basis of Design

All components for Phase I of the Leachate Tank System are designed and configured for eventual full development of the IDF to facilitate the planned expansions. The Leachate Tank System design life is 40 years.

The following sections provide specific review summaries associated with the WAC 173-303-640 IQRPE design assessment requirements. These include: structural design standards, waste compatibility, pressure control system, secondary containment system, ancillary equipment design, corrosion assessment, and inspection schedule recommendations. These sections are presented in the same order as presented in Ecology Publication 94-114.

2.2.1 Structural Design Standards

Ecology Publication 94-114 requires that an IQRPE certify that the proposed tank system will have a sufficient structural integrity and is acceptable for storing and treating dangerous waste in accordance with WAC 173-303-640(3)(a). This assessment must show that the foundation, structural support, seams, connections, and pressure controls are adequately designed and that the tank system has sufficient structural strength, compatibility with the wastes to be stored or treated, and corrosion protection to ensure that it will not collapse, rupture, or fail.

The following activities have been conducted in the review of the design standards for the Leachate Tank System:

- The structural design standards and criteria used have been reviewed to ensure that they clearly and specifically reference applicable industry standards and recommended practice codes.
- Structural design criteria that apply to specific parts (i.e., those associated with the WAC requirements for handling dangerous waste) of the Leachate Tank System have been reviewed to ensure that they are clearly indicated.
- Structural calculations and drawings as identified in Attachment A have been reviewed for design adequacy.

The Leachate Tank System equipment and structures are analyzed and designed (for loads and load combinations as applicable for dead and live loads) in accordance with Performance Category 1, PC-1. The applicable structural analysis requirements from this standard have been incorporated into the design media.

The IQRPE has reviewed the design to ensure that the following activities have been incorporated into design and Construction Specifications as part of the design basis:

- The Leachate 90-Day Accumulation Tank is designed based on a full tank.
- Calculations are provided that account for liquid specific gravity, external hydrostatic pressure, wind loading, and variables such as internal vapor pressure.
- Design parameters used in structural calculations are clearly indicated and labeled on clarifying sketches.
- Seismic considerations, which are appropriate to the seismic risk zone in which the facility is located, are accounted for in the structural calculations.
- The foundation underlying the Leachate 90-Day Accumulation Tank will support the load of a full tank plus the secondary containment structure per the requirements of WAC 173-303-640 (3)(a)(v)(A).
- The miscellaneous foundations (Crest Pad Building, Leachate Transfer Building, Leachate 90-Day Accumulation Tank, and Truck Loadout Station) have been designed to prevent failure due to settlement, compression, and uplift per the requirements of WAC 173-303-640(4)(c)(ii).
- The design plans require that homogeneous, porous, non-corrosive backfill material be placed below and around tank system foundations and underground piping to provide uniform structural support and prevent excessive settlement.
    - The IQRPE concurs with the following specifications identified in the design media:

- RPP-18489, 02315, Fill and Backfill
- RPP-18489, 02319, Subgrade Preparation
- RPP-18489, 02320, Trench Backfill

- The tank systems have been designed to withstand the effects of frost heave per the requirements of WAC 173-303-640(3)(a)(v)(C).
  - The IQRPE has determined that frost heave is not a concern for the IDF foundations because the shallowest depth (including backfill) is 18" (Truck Loading Foundation). Rarely at Hanford does the frost level reach that depth. The soils under these foundations have low moisture content, are sandy and normally not frost heave susceptible.
- Other load considerations reviewed for adequacy include:
  - Dead loads
  - Live loads
  - Wind loads
  - Other loads: Other loads from snow, volcanic ashfall, flooding, groundwater pressure, thermal changes, concrete creep and lightning are considered to be negligible and are not included in the calculations.

2.2.1.1 HDPE Underground Transfer Pipe

The IDF design report (RPP-18486) including the associated calculations, drawings, and specifications were reviewed to ensure that provisions for the proper loads, supports, and design basis had been incorporated. The IQRPE concurs that appropriate maximum external design loads (from waste, soil [dead loads] and operations [live loads]) are adequately utilized. Wind loads, and other loads are not applicable. Frost heave loads are not applicable because the piping is installed below frost depth. The IQRPE concurs with the pipe sizes, material and wall thicknesses that were chosen with respect to structural adequacy of the design. The Leachate Collection and Removal System and Trench Leak Detection System slotted-HDPE piping was determined to be structurally adequate to withstand the design loads.

Lastly, the IQRPE recognizes that the specifications are written so that placement of buried HDPE pipe will adequately accommodate thermal expansion stresses since the HDPE piping has a relatively large coefficient of thermal expansion.

The IQRPE concurs that the design meets the requirements of WAC 173-303-640 for structural design.

2.2.1.2 Crest Pad Building and Ancillary Equipment

The IDF design report and associated calculations were reviewed.

2.2.1.2.a Crest Pad Building

The IQRPE structural design assessment for the Crest Pad Building included review of the foundation and building. Both foundation and building are credited with secondary containment.

The IQRPE performed an independent calculation to verify the structural adequacy of the foundation design (Attachment D, 24993-R4-CALC-001). The IQRPE concurs that this design meets the structural design requirements of WAC 173-303-640.

2.2.1.2.b Ancillary Equipment

The fillet weld that connects the winch support bracket to the vertical post is not an American Welding Society (AWS) pre-qualified weld. Since the root inside the vertical post cannot be accessed, backing bars or root gouging cannot be used (to preclude undercut and overlap). The IQRPE will review the following vendor submittals and the winch mounting details to verify the structural weld:

- Welding Procedure Specification (WPS)
- Welding Procedure Qualification (WPQ)
- Performance Qualification Requirements (PQR) for welders

The IQRPE concurs that the design meets the requirements of WAC 173-303-640 for structural design.

2.2.1.3 Combined Sump and Ancillary Equipment

The IDF design report, associated drawings, and specifications were reviewed.

2.2.1.3.a Combined Sump

The IQRPE concurs that this design meets the requirements of WAC 173-303-640 for structural design.

2.2.1.3.b Ancillary Equipment

The IQRPE concurs that this design meets the requirements of WAC 173-303-640 for structural design.

2.2.1.4 Leachate 90-Day Accumulation Tank

The IDF design report including the foundation calculation, associated drawings, and specifications were reviewed.

The concrete ring wall foundation design analysis takes into account the hoop tension due to the surcharge load from the full tank leachate liquid, and the active soil pressure from the backfill in the ringwall. The tensile stress in the hoop reinforcing steel was calculated and compared to the design allowable.

RPP-18489, Section 13205, *Lined Bolted Steel Liquid Storage Tanks*, was reviewed and the IQRPE concludes that this specification is adequate in providing the appropriate structural requirements. The structural analysis and tank drawings show that the design meets the specification requirements.

The IQRPE concurs that the design meets the requirements of WAC 173-303-640 for structural design.

2.2.1.5 Leachate Transfer Building and Ancillary Equipment

The IDF design report including the associated calculations, drawings, and specifications were reviewed.

2.2.1.5.a Leachate Transfer Building

The IQRPE structural design assessment for the Leachate Transfer Building included review of the foundation and building. Both foundation and building are credited with secondary containment.

A calculation was performed by the IQRPE to independently verify the structural adequacy of the design (Attachment D, 24993-R4-CALC-002). The IQRPE concurs that this design meets the requirements of WAC 173-303-640 for structural design.

2.2.1.5.b Ancillary Equipment

The IQRPE concurs that this design basis meets the requirements of WAC 173-303-640 for structural design.

2.2.1.6 Truck Loadout Station and Ancillary Equipment

The IDF design report including the associated calculations, drawings, and specifications were reviewed.

2.2.1.6a Truck Loadout Station

The IQRPE structural design assessment for the Truck Loadout Station included a review of the foundation. The foundation (including the sumps) is credited with secondary containment.

Calculations were performed by the IQRPE to independently verify the structural adequacy of the design (Attachment D, 24993-R4-CALC-003, and 24993-R4-CALC-004). The IQRPE concurs that this design meets the requirements of WAC 173-303-640 for structural design.

2.2.1.6.b Ancillary Equipment

The Truck Loading Connection is a steel hollowed structural section (HSS) 10 in. x 10 in. x 3/8 in. column about 16 ft. tall. At the top of the column, there is a HSS 6 in. x 6 in. x ¼ in. horizontal cantilever beam, about 10 ft. long. The cantilever beam to column joint design requires a complete penetration groove weld for connecting the fixed end of the HSS 6 in. x 6 in. x ¼ in. beam to a 1 in. thick plate attached to one side of the column.

The design requires this weld to be able to develop or carry the total load capacity of the HSS 6 in. x 6 in. x ¼ in. beam, including the bending moment. This weld joint form is not an AWS pre-qualified weld joint. Therefore, the AWS requires this joint form and the welding procedure to be tested and qualified in accordance with AWS D1.1. Evidence of the required weld joint testing and qualification will be provided in the IQRPE Installation Certification Report using the submittals listed below.

Specification 5500 requires submittals for:

- Welding Procedure Specifications (WPS)
- Welding Procedure Qualification (WPQ)
- Performance Qualification Requirements (PQR) for welders

The IQRPE concurs that the design meets the requirements of WAC 173-303-640 for structural design.

2.2.2 Waste Compatibility

For bounding design conditions and material selections the mixed waste disposed in the IDF consists of toxicity characteristic waste, state-only, and listed waste from nonspecific sources. The final list of approved waste codes for disposal in the IDF facility is found in the *IDF Part A Form*.

Design of the Leachate Tank System components is based on some expected leachate properties from the Hanford W-025 Project, *Radioactive Mixed Waste Disposal Facility* as shown below.

- Section 5.6.2.1 of the design report states:
  - Concentrations of organics benzene and machine oil were below detection limits. Concentrations of methanol were detected, but at concentrations not considered aggressive for polyester or HDPE.
  - Metals added to the waste were below the detection limits in the source leachate.

- Primary constituents of the source leachate were sodium cations and common inorganic anions, with a pH of 9.2.
- Based on these results, a synthetic leachate was generated for testing purposes. The source leachate formula resulted in a solution with total inorganics and dissolved salts of approximately 204,000 mg/L and pH of 9.2 using NaOH or HNO_3, as required.

- Also, Section 5.6.2.2 of the design report states:

  The maximum leachate concentrations and radiation exposure developed for the ICDF (DOE-ID, 2002) based on the anticipated waste design inventory were as follows:

  - Organics–70 mg/l
  - Inorganics–18,400 mg/l
  - Radiation Exposure–12,000 rads

Attachment C of this report documents the material compatibility assessment. Coatings found in Specification 9900 were found to be acceptable. This includes the concrete coating product which has excellent tolerance to decontamination activities, radiation, and petroleum. The importance of its tolerance to petroleum is that it will likely maintain its integrity in the event of a fuel leakage at the Truck Loadout Station.

Extensive testing has been done to determine acceptability of material for the tank primary and secondary liner. The *IDF Leachate Tank Liner Compatibility Test Report* documents the acceptable results.

The IQRPE concurs that this design basis meets the requirements of WAC 173-303-640 for waste compatibility.

2.2.3 Pressure Control System

Ecology requires that an IQRPE certify that the proposed tank system has been designed with appropriate pressure control systems.

The following activities have been conducted in the review of the design standards for the Leachate Tank System:

- Ensure that there is an acceptable preliminary piping and instrumentation system that will allow for adequate pressure control, per the requirements of WAC 173-303-640(3)(a).
- Ensure the following basis for the detailed design of the tank system accounts for:
  - Tank capacity and design pressure.

- The applicable characteristics of the waste to be stored.
- Maximum inflow and outflow rates.
- The type of roof and how it is attached to the tank.
- Locations of pressure relief vents and other pressure controls.
- The pressure control system discharge locations.

The following subsections highlight the IQRPE Pressure Control System review for each of the major Leachate Tank System components. The Leachate Tank System is not designed to be a pressurized system.

2.2.3.1 HDPE Underground Transfer Pipe

Normal leachate transfer operations are not expected to pressurize the carrier pipe beyond that required to overcome the head. However, events which have the potential to over-pressurize the carrier pipe (such as pump run-up) need to be considered in the pressure control system design. Pressure relief devices are not included in the transfer piping because the maximum shutoff pressure of the leachate transfer pump is 65 psi. This is significantly less than the pressure rating of the HDPE piping. Therefore, the IQRPE concludes that the HDPE piping is adequately designed.

The LCRS and SLDS piping at the bottom of the trench is slotted piping to facilitate liquid collection and therefore is not a pressure system. Pressures in the riser portions are expected to only achieve that required to overcome the head coming out of the trench.

The IQRPE concurs that this design basis meets the requirements of WAC 173-303-640 for pressure control systems.

2.2.3.2 Crest Pad Building and Ancillary Equipment

Normal leachate transfer operations are not expected to pressurize the carrier pipe. However, off-normal events which have the potential to pressurize the carrier pipe (such as pump run-up) need to be considered in the pressure control system design. Pressure relief devices are included in the sump. The PVC transfer piping has an acceptable rating because the maximum shutoff pressure of the high flow LCRS pump is 65 psi. This is significantly less than the pressure rating of the PVC piping. Therefore, the IQRPE concludes that the PVC piping is adequately designed.

The IQRPE concurs that this design meets the requirements of WAC 173-303-640 for pressure control systems.

2.2.3.3 Combined Sump and Ancillary Equipment

The Combined Sump is open to the atmosphere through the manhole cover and will remain unpressurized.

The IQRPE concurs that this design basis meets the requirements of the WAC 173-303-640 for pressure control systems.

2.2.3.4 Leachate 90-Day Accumulation Tank

The Leachate 90-Day Accumulation Tank is an atmospheric pressure tank. The design utilizes a floating cover with vent to the atmosphere to prevent pressure buildup when filling or emptying. Additionally, there are no internal vapor pressure concerns. The design adequately accounts for the head of the tank when filled to design capacity.

Specification 13205 was reviewed and the IQRPE concludes that this specification is adequate in providing the appropriate pressure control requirements. The structural analysis and tank and liner drawings show that the design meets the specification requirements. A vent in the floating cover maintains atmospheric pressure within the tank as it is filled or emptied.

The IQRPE concurs that this design meets the requirements of WAC 173-303-640 for pressure control systems.

2.2.3.5 Leachate Transfer Building

Pressure relief devices are not included in the PVC transfer piping because the maximum shutoff pressure of the leachate transfer pump is 17 psi. This is significantly less than the pressure rating of the PVC piping.

The IQRPE concurs that this design meets the requirements of WAC 173-303-640 for pressure control systems.

2.2.3.6 Truck Loadout Station

The loadout connection at the Truck Loadout Station is considered a pressure system. The design report and associated drawings were reviewed.

The IQRPE concurs that this design meets the requirements of WAC 173-303-640 for pressure control systems.

2.2.4 Secondary Containment System

Ecology requires that an IQRPE certify that the proposed tank system has been designed with appropriate secondary containment system. Secondary containment for tank systems that store, accumulate, or treat dangerous waste must be designed and installed to meet the requirements of WAC 173-303-640(4)(b).

The following design requirements have been confirmed during the review of the design standards for the Leachate Tank System:

- The system is designed to prevent any migration of wastes or accumulated liquid out of the secondary containment system to the soil, groundwater, or surface water at any time during the use of the tank system.
- The system is capable of detecting and collecting releases and accumulated liquids until the collected material is removed.
- The system is constructed of materials that are compatible with the wastes to be placed in the tank system.
- The system has been specified to have sufficient strength to withstand stresses due to static head during a release, pressure gradients, climatic conditions, nearby vehicle traffic, and other stresses resulting from daily operations.
- The system will be placed on a foundation or base that will support the secondary containment system, provide resistance to pressure gradients above and below the system and prevent failure due to excessive settlement, compression, or uplift.
- The system will be provided with a leak detection system that will detect the failure of either the primary or secondary containment structure or the presence of any release of dangerous waste or accumulated liquid in the secondary containment system within 24 hours.
- The system will be sloped or otherwise designed or operated to drain and remove liquids resulting from leaks, spills, or precipitation.

The following subsections highlight the IQRPE secondary containment review for each of the Leachate Tank System major components.

2.2.4.1 HDPE Underground Transfer Pipe

All primary underground leachate transfer piping is double-walled HDPE with the outer wall providing secondary containment. HDPE containment piping will be positioned for the unrestricted passage of fluid flow from the carrier pipe. The IQRPE has reviewed open channel flow for a smooth-walled pipe utilizing the Manning equation and concurs with the drawing requirement that 1% slope (approximately 1/8" per linear foot) is adequate to allow for gravity flow drainage in the secondary pipe to the Combined Sump.

The LCRS, LDS, and SLDS utilize single-walled piping as a conduit for inner carrier piping. These pipes provide secondary containment. Additional containment coverage is provided by the trench engineered barrier.

The IQRPE concurs that this design meets the requirements of the WAC 173-303-640 requirements for secondary containment.

2.2.4.2 Crest Pad Building and Ancillary Equipment

The Crest Pad Building concrete floor and integrated sump provides secondary containment within the Crest Pad Building. The foundation is adequately coated to prevent leachate leaks to the ground in the event of a primary containment breach. The design incorporates a chemical-resistant waterstop between vertical sump walls and horizontal foundation slabs; as well as providing a waterstop at the horizontal foundation slab-to-building wall interface. Additionally, foundation curbs (with waterstops) are used to prevent the possibility of leachate leaks into the environment. The slab foundation will drain to the building's sump, then pump leachate to the main transfer line and Leachate Transfer Building and finally to the Leachate 90-Day Accumulation Tank. All concrete surfaces exposed to air are to be covered with a sealant adequate to withstand the worst case leachate properties. Chemical resistant waterstops are utilized for all construction joints.

The Crest Pad Building does not have an automatic fire extinguishing system and therefore is exempt from the Uniform Fire Code 80.301.

The IQRPE concurs that this design meets the requirements of WAC 173-303-640 for secondary containment.

2.2.4.3 Combined Sump and Ancillary Equipment

The Combined Sump and its ancillary equipment is a significant part of the Tank Leachate Tank System secondary containment. Potential leaks from all primary underground HDPE transfer piping, the Leachate Transfer Building, the Leachate 90-Day Accumulation Tank, and the Truck Loadout Station will gravity drain to the Combined Sump. The Combined Sump leak detection switch will provide a signal to the control system that automatically shuts down all the pumps except the Combined Sump pump. The pumps will be shut down because any one of the pipelines associated with the pumps could be leaking into the leak detection chamber.

Liquid level above the inner manhole height will initiate a 250 gpm pump that will transfer leachate back to the Leachate 90-Day Accumulation Tank to prevent overflow. The Combined Sump pump is sized to accommodate the worst case truck overflow event at the Truck Loadout Station.

The design assumes that a leak is large enough from the encasement pipe going into the Combined Sump leak detector chamber to be seen. If visual inspection of the drain lines into the Combined Sump cannot determine the source-line for the leak, the system can be restarted while the pipe outlets are visually observed. If the leak was large enough to fill the outer sump, the fluid in the outer sump would be pumped prior to restarting the system. Data collected with the Plant Instrument and Control System (PICS) will help identify the source of leak (i.e., which pumps were operating when the leak occurred).

Under the Uniform Fire Code 80.301, the Combined Sump is exempt from the automatic fire extinguishing system.

The Combined Sump pump is critical to the IDF Leachate Tank System secondary containment design. Regular preventive maintenance recommended by the pump manufacturer is required to ensure the reliability and availability of the pump.

The IQRPE concurs that this design meets the requirements of WAC 173-303-640 for secondary containment.

2.2.4.4 Leachate 90-Day Accumulation Tank

The Leachate 90-Day Accumulation Tank is designed such that the inner geomembrane liner and floating cover provide the primary containment. The second geomembrane liner in association with the Leachate Tank Leak Detection Penetration (Drawing H-2-830850) and Combined Sump provide the secondary containment. The outside bolted, corrugated steel frame attached to a concrete ringwall foundation provide the framework to support the tank.

If the failure of the tank's primary liner is a small leak, the secondary liner will collect the leachate and transport it to the pipe at the tank's center which drains to the Combined Sump. At the sump, the leachate can be pumped out. If there was a large leak in the primary liner and operations staff could not immediately pump out the leachate tank from the Combined Sump, the valve on the tank leak detection pipe could be closed to collect any release within the secondary liner. All leachate from the tank can be rerouted by valving in the leachate transfer pump station to allow direct pumping to a tanker truck at the Truck Loadout Station.

As part of the Washington Department of Ecology IDF Dangerous Waste Permit Application review comments, it was concurred that the Leachate 90-Day Accumulation Tank design is adequate for providing secondary containment.

The IQRPE concurs that this design meets the requirements of WAC 173-303-640 for secondary containment.

2.2.4.5 Leachate Transfer Building

The Leachate Transfer Building concrete floor and integrated sump provides secondary containment within the Leachate Transfer Building. The foundation is adequately coated to prevent leachate leaks to the ground in the event of a primary containment breach. The design incorporates a chemical-resistant waterstop between vertical sump walls and horizontal foundation slabs; as well as providing a waterstop at the horizontal foundation slab-to-building wall interface. Additionally, the doors utilize a stepover curb to prevent the possibility of leachate leaks into the environment. The slab foundation will drain to the building's sump, then pump leachate to the main transfer line and Leachate Transfer Building, and finally to the Leachate 90-Day Accumulation Tank. All concrete surfaces exposed to air are to be covered with a sealant adequate to withstand the worst case leachate properties. Chemical resistant waterstops are utilized for all construction joints.

The Leachate Transfer Building does not have an automatic fire extinguishing system and therefore is exempt from the Uniform Fire Code 80.301.

The IQRPE concurs that this design basis meets the requirements of WAC 173-303-640 for secondary containment.

2.2.4.6 Truck Loadout Station

The Truck Loadout Station utilizes the transfer carrier pipe and the tanker truck as its primary containment. The transfer pipe is double-walled and provides secondary containment for the piping routed to the truck. The Truck Loadout Station foundation (including the sumps) provide secondary containment for the truck. The curbed concrete truck slab is sloped to 2 drains which gravity feed to the inner manhole of the Combined Sump. The Combined Sump is instrumented to automatically transfer liquid to the Leachate 90-Day Accumulation Tank. All concrete surfaces exposed to air are to be covered with a sealant chemically adequate to withstand the worst case leachate properties. Chemical resistant waterstops are utilized for all construction joints. Since the truck loadout station is open to the environment, covers are designed to be placed over the sumps to protect the sumps when not in use. Operational procedures will ensure that the sump covers are removed prior to a loadout event.

The truck loadout sumps are not located in a building and thus are not required to meet the Uniform Fire Code 80.301.

The IQRPE concurs that this design meets the requirements of WAC 173-303-640 for secondary containment.

2.2.5 Ancillary Equipment Design

Ecology requires that an IQRPE certify that the proposed tank system has been designed with appropriate ancillary equipment in accordance with the requirements of WAC 170-303-640 (3)(f) and (4)(f). Ancillary equipment considered significant is assessed for each of the Leachate Tank System major components.

The following design requirements have been confirmed during the review of the design standards for the Leachate Tank System:

- Secondary containment has been provided for flanges, joints, and valves and other connections regardless of whether or not they are welded to the piping and visually inspected for leaks on a daily basis.

- Secondary containment has been provided where pumps and valves transfer dangerous wastes between tanks regardless of whether they are seamless or they can be visually inspected on a daily basis.

The following subsections highlight the IQRPE Ancillary Equipment Design review as applied to the piping and instrumentation diagrams (P&IDs).

2.2.5.1 P&ID Review

All P&IDs were reviewed for the following basic considerations:

- Appropriate location of pressure, temperature, and flow sensing equipment.
- Necessary piping, valve, and instrumentation labeling.
- Proper positioning of instrumentation to prevent undue influence from upstream equipment.
- Necessary isolation valves to allow instrumentation maintenance.
- Identification of preliminary interlocks.
- Location of check valves or back-flow preventers.
- General designation of appropriate alarms and recorded information.

The IQRPE concurs that this design is adequate to meets the requirements of WAC 173-303-640.

2.2.6 Corrosion Assessment

An IQRPE corrosion assessment is only required for the external shell of primary containment that is in direct contact with soil or water per the requirements of WAC 173-303-640(3)(a)(iii). Because all primary components are located within secondary containment on devices that are located on concrete pads, these requirements do not apply to the IQRPE review of the Leachate Tank System design. Cathodic protection is not applicable for this design.

All exposed carbon steel surfaces are either galvanized or coated. The corrugated, galvanized steel sheets used for constructing the Leachate 90-Day Accumulation Tank walls have incorporated additional corrosion protection through application of an electrostatically applied, thermally cured, polyester powdercoat finish.

Although not a corrosion concern, exposed PVC piping is to be coated to prevent ultraviolet deterioration. The liner and cover material is specified to prevent ultraviolet deterioration.

The IQRPE concurs that this design basis meets the requirements of WAC 173-303-640 for corrosion assessment.

2.2.7 Recommended Inspection Schedule

Adequate tank system design does not necessarily ensure proper installation. For this reason, dangerous waste regulations require an independent qualified installation inspector or an IQRPE to inspect new tank systems before they are covered, enclosed or placed in use (WAC 173-303-640(3)(c)). An IQRPE inspection plan will be generated separately from this document.

Labels or signs identifying the waste contained in the system will be verified as part of the final installation certification. The label or sign must be legible at a distance of at least fifty feet, and

must bear a legend which identifies the waste in a manner which adequately warns employees, emergency response personnel, and the public of the major risk(s) associated with the waste being stored or treated in the tank system.

The IQRPE concurs with the Design Agent recommendations for inspection intervals. This includes incorporating vendor-recommended inspections and maintenance for ancillary equipment into operations procedures.

The need for additional periodic inspections will be determined by the Owner/Operator in accordance with WAC 173-303-640(3)(b) and a recommendation will be included in the construction report.

3.0 DESIGN REVIEW ASSESSMENT CERTIFICATIONS

The design for the Leachate Tank System as identified in Section 1.3 of this report has been assessed. System design, based on the data and premises provided in this design document, has been assessed to be in compliance with WAC 173-303-640, as applicable. These results are based on the applicable codes, standards and documents. The certifications below are in accordance with the requirements of WAC 173-303-640(2)(b) and 173-303-810(13)(a).

Report Lead IQRPE:

I certify under penalty of the law that this document and all Attachments were prepared under my direction or supervision in accordance with a system designed to assure that qualified personnel properly gather and evaluate the information submitted. Based on my inquiry of the person or persons who manage the system, or those persons directly responsible for gathering the information, the information submitted is, to the best of my knowledge and belief, true, accurate, and complete. I am aware that there are significant penalties for submitting false information, including the possibility of fine or imprisonment for knowing violations.

Report Reviewed by:

Robert L. Goodman, PE 24 Jan 06.

Karl M. Walterskirchen, PE Date

Chief Engineer, TGS

4.0 REFERENCES

Integrated Disposal Facility (IDF) Phase I Critical Systems Design – Design Report, RPP-18486, Rev. 0, 2003, CH2M HILL Hanford Company, Richland, Washington.

System Specification for the Integrated Disposal Facility, RPP-15833, Rev. 0, 2004, CH2M HILL Hanford Company, Richland, Washington.

Project Definition Criteria for the Integrated Disposal Facility, RPP-15479, Rev. 0A, 2004, CH2M HILL Hanford Company, Richland, Washington.

Integrated Disposal Facility (IDF) Detailed Design: Technical Specifications (Final Design Submittal), RPP-18489, Rev. 0, 2004, CH2M HILL Hanford Company, Richland, Washington.

Integrated Disposal Facility (IDF) Operations and Maintenance Philosophy, RPP-18516, Rev. 0, 2004, CH2M HILL Hanford Company, Richland, Washington.

Integrated Disposal Facility (IDF) Leachate Tank Liner Compatibility Test Report, RPP-RPT-26312, Rev. 0, 2005, CH2M HILL Hanford Company, Richland, Washington.

DOE/RL 2003, Hanford Facility Danger Waste Permit Application, Integrated Disposal Facility, DOE/RL-2003-12, Rev. 1, U.S. Department of Energy, Richland Laboratory, Richland, Washington.

HNF-SD-GN-ER-501, Rev. 1B, Natural Phenomena Hazards, procedure for the Hanford Site, South Central Washington.

Publication 94-114, "Guidance for Assessing and Certifying Tank Systems that Store and Treat Dangerous Waste", June 1994, Washington State Department of Ecology

Publication 95-420, "Guidance for Assessing Dangerous Waste Secondary Containment Systems", September 1995, Washington State Department of Ecology

TFC-ENG-STD-06, Rev. A, Design Loads for Tank Farm Facilities, CH2M HILL Hanford Group, Inc., Richland, Washington.

Washington Administrative Codes (WAC)

WAC 173-303, "Dangerous Waste Regulations"

WAC 173-303-640, "Tank Systems"

WAC 173-303-640(3), "Design and Installation of New Tank Systems or Components"

WAC 173-303-640-810(13)(a), "Certification"

WAC 196-23, "Licensing, Department of Engineers and Land Surveyors, Board of Registration for Professional, Stamping and Seals"

WAC 196-23.020, "Seal/Stamp Usage"

ATTACHMENT A

LEACHATE TANK SYSTEM

IQRPE DISPOSITION OF CALCULATIONS, SPECIFICATIONS, DRAWINGS, AND OTHER REPORTS

(19 Sheets)

ATTACHMENT A

LEACHATE TANK SYSTEM

IQRPE DISPOSITION OF CALCULATIONS, SPECIFICATIONS, DRAWINGS, AND OTHER REPORTS

Document Number	Document Title	Comments	Associated Standards
Technical Specifications (RPP-18489, Rev. 0)			
02315	Fill and Backfill	This specification was reviewed in its entirety. Specific IQRPE review activities are described in the following sections of this report. -- 2.2.1.2 -- 2.2.1.3 -- 2.2.1.5	ASTM D75, Standard Practice for Sampling Aggregates ASTM D422, Standard Test Method for Particle-Size Analysis of Soils ASTM D698, Test Method for Laboratory Compaction Characteristics of Soil Using Standard Effort (12,400 ft-lbf/ft^3) ASTM D1140, Standard Test Method for Amount of Material in Soils Finer Than the No. 200 (75 micrometer) Sieve ASTM D1556, Standard Test Method for Density and Unit Weight of Soil in Place by the Sand-Cone Method ASTM D2216, Standard Test Method for Laboratory Determination of Water (Moisture) Content of Soil and Rock by Mass ASTM D2922, Standard Test Methods for Density of Soil and Soil-Aggregate in Place by Nuclear Methods (Shallow Depth) ASTM D3017, Standard Test Method for Water Content of Soil and Rock in Place by Nuclear Methods (Shallow Depth)
02319	Subgrade Preparation	This specification was reviewed in its entirety. Specific IQRPE review activities are described in the following sections of this report. -- 2.2.1.2 -- 2.2.1.3 -- 2.2.1.4 -- 2.2.1.5 -- 2.2.1.6	ASTM D 698, Test Method for Laboratory Compaction Characteristics of Soil Using Standard Effort (12,400 ft-lbf/ft^3 (600 kN-m/m^3))

Document Number	Document Title	Comments	Associated Standards
02320	Trench Backfill	This specification was reviewed in its entirety. Specific IQRPE review activities are described in Section 2.2.1.1 of this report.	ASTM C136, Standard Test Method for Sieve Analysis of fine and coarse Aggregates ASTM D698, Test Method for Laboratory Compaction Characteristics of Soil using Standard Effort (12,400 ft-lbf/ft^3 (600 kN-m/m^3)) ASTM D1140, Standard Test Method for Amount of Materials in Soils Finer than the No. 200 (75 micrometer) Sieve ASTM D4318, Standard Test Methods for Liquid Limit, Plastic Limit, and Plasticity Index of Soils
03301	Concrete	This specification was reviewed in its entirety. Specific IQRPE review activities are described in the following sections of this report. -- 2.2.1.2 -- 2.2.1.4 -- 2.2.1.5 -- 2.2.1.6	ASTM A185, Standard specification for Steel Welded Wire Fabric, Plain, for Concrete Reinforcement ASTM A615, Standard Specification for Deformed and Plain billet-Steel Bars for Concrete Reinforcement ASTM C31, Standard Practice for Making and Curing Concrete Test Specimens in the Field ASTM C33, Standard Specification for Concrete Aggregates ASTM C39, Standard Test Methods for Compressive Strength of Cylindrical Concrete Specimens ASTM C94, Standard Specification for Ready-Mix Concrete ASTM C150, Standard Specification for Portland Cement ASTM C260, Standard Specification for Air-Entraining Admixtures for Concrete ASTM C309, Standard Specification for Liquid Membrane-Forming Compounds for Curing Concrete ASTM C494, Standard Specification for Admixtures for Concrete ASTM C618, Standard Specification for Fly Ash and Raw or Calcined Natural Pozzolan for Use as a Mineral Admixture in Portland Cement Concrete ASTM D994, Standard Specification for Performed Expansion joint Filler for Concrete (Bituminous Type)
5500	Metal Fabrications and Castings	This specification was reviewed in its entirety. Specific IQRPE review activities are described in the following sections of this report. -- 2.2.1.2	The Aluminum Design Manual, The Aluminum Association, Inc. Inspection of Products Hot-Dip Galvanized After Fabrication, American Galvanizers Association AISC S329, Allowable Stress Design Specification for Structural Joints using ASTM A325 or A490 Bolts

Document Number	Document Title	Comments	Associated Standards
		-- 2.2.1.5 -- 2.2.1.6	Stainless Steel Types, American Iron and Steel Institute ANSI A10.11, Safety Requirements for Personnel and Debris Nets (not IQRPE applicable) ANSI A14.3, Ladders – Fixed – Safety Requirements (not IQRPE applicable) ANSI B1.1, Unified-inch Screw Threads (UN and UNR Thread Form) ASTM A36/A36M, Specification for Carbon Steel ASTM A48, Specification for Gray Iron Castings ASTM A53/A53M, Specification for Pipe, Steel, Black and Hot-Dipped, Zinc-Coated, Welded and Seamless ASTM A108, Specification for Steel Bars, Carbon, Cold-Finished, Standard Quality ASTM A123/A123M, Specification for Zinc (Hot-Dip Galvanized) Coatings on Iron and Steel Products ASTM A143, Practice for Safeguarding Against Embrittlement of Hot-Dip Galvanized Structural Steel Products and Procedure for Detecting Embrittlement ASTM A153/A153M, Specification for Zinc Coating (Hot-Dip) on Iron and Steel Hardware ASTM A193/A193M, Specification for Alloy-Steel and Stainless Steel Bolting Materials for High-Temperature Service ASTM A194/A194M, Specification for Carbon and Alloy Steel Nuts for Bolts for High-Pressure or High-Temperature Service, or Both ASTM A240/A240M, Specification for Heat-Resisting Chromium and Chromium-Nickel Stainless Steel Plate, Sheet, and Strip for Pressure Vessels ASTM A276, Specification for Stainless Steel Bars and Shapes ASTM A278, Specification for Gray Iron Castings for Pressure-Containing Parts for Temperatures up to 650 Degrees ASTM A283/A283M, Specification for Low and Intermediate Tensile Strength Carbon Steel Plates ASTM A307, Specification for Carbon Steel Bolts and Studs, 60,000 PSI Tensile ASTM A325, Specification for Structural Bolts, Steel, Heat Treated 120/105 ksi Minimum Tensile Strength

Document Number	Document Title	Comments	Associated Standards
			ASTM A380, Practice for Cleaning, Descaling, and Passivation of Stainless Steel Parts, Equipment, and Systems ASTM A384, Practice for Safeguarding Against Warpage and Distortion During Hot-Dip Galvanizing of Steel Assemblies ASTM A385, Practice for Providing High-Quality Zinc Coatings (Hot-Dip) ASTM A489, Specification for Carbon Steel Lifting Eyes ASTM A500, Specification for Cold-Formed Welded and Seamless Carbon Steel Structural Tubing in Rounds and Shapes ASTM A501 Specification for Hot-Formed Welded and Seamless Carbon Steel Structural Tubing ASTM A563, Specification for Carbon and Alloy Steel Nuts ASTM A653, Specification for Steel Sheet, Zinc-Coated (Galvanized) or Zinc-Iron Alloy-Coated (Galvannealed) by the Hot-Dip Process ASTM A780, Practice for Repair of Damaged and Uncoated Areas of Hot-Dip Galvanized Coatings ASTM A786/A786M, Specification for Hot-Rolled Carbon, Low-Alloy, High-Strength Low-Alloy, and Alloy Steel Floor Plates ASTM A793, Specification for Rolled Floor Plate, Stainless Steel ASTM A 967, Specification for Chemical Passivation Treatments for Stainless Steel Parts ASTM A992/A992M, Specification for Steel for Structural Shapes for Use in Building Framing ASTM B209, Specification for Aluminum and Aluminum-Alloy Sheet and Plate ASTM B308/B308M, Specification for Aluminum-Alloy 6061-T6 Standard Structural Profiles ASTM B429, Specification for Aluminum-Alloy Extruded Structural Pipe and Tube ASTM B632/B632M, Specification for Aluminum-Alloy Rolled Tread Plate ASTM D1056, Specification for Flexible Cellular Materials – Sponge or Expanded Rubber ASTM F436, Specification for Hardened Steel Washers

Document Number	Document Title	Comments	Associated Standards
			ASTM F468, Specification for Nonferrous Bolts, Hex Cap Screws, and Studs for General Use ASTM F593, Specification for Stainless Steel bolts, Hex Cap Screws, and Studs ASTM F594, Specification for Stainless Steel Nuts ASTM F844, Specification for Washers, Steel, Plain (Flat). Unhardened for General Use ASTM F1554, Specification for Anchor Bolts, Steel, 36, 55, and 105-ksi Yield Strength Evaluation Reports for Concrete and Masonry Anchors, International Conference of Building Officials (ICBO) OSHA (not IQRPE applicable) Specifications for Stainless Steel, Specialty Steel Industry of North America (SSINA) Design Guidelines for the Selection and Use of Stainless Steel (SSINA) Stainless Steel Fabrication (SSINA) Stainless Steel Fasteners (SSINA)

Document Number	Document Title	Comments	Associated Standards
09900	Paint Coating Systems	This specification was reviewed in its entirety. Specific IQRPE review activities were performed for the following sections of this report. -- 2.2.1.4 -- 2.2.1.6 -- 2.2.2 -- 2.2.4 -- 2.2.6	ASTM D412, Test Methods for Vulcanized Rubber and Thermoplastic Rubbers and Thermoplastic Elastomers-Tension ASTM D570, Test Method for Water Absorbtion of Plastics ASTM D638, Test Method for Tensile Properties f Plastics ASTM D714, Test Method for Evaluating Degree of Blistering Paints ASTM D772, Test Method for Evaluating Degree of Flaking (Scaling) of Exterior Paints ASTM D1653, Test Methods for Water Vapor Transmission of Organic Coating Films ASTM D3912, Test Method for Chemical Resistance of Organic Coatings by the Taber Abraser ASTM D4082, Test Method for Effects of Gamma Radiation on Coatings for Use in Light-Water Nuclear Power Plants ASTM D4259, Standard Practice for Abrasive Concrete ASTM D4263, Test Method for Indicating Moisture Content in Concrete by the Plastic Sheet Method ASTM D4541, Test Method for Pull-Off Strength of Coatings Using Portable Adhesion Testers ASTM D5139, Sample Preparation for Qualification Testing of Coatings to be Used in Nuclear Power Plants ASTM D5144, Guide for Use of Protective Coating Standards on Nuclear Power Plants ASTM E84, Test Method for Surface Burning Characteristics of Building Materials

Document Number	Document Title	Comments	Associated Standards
11305	Combined and Building Sump Pumps Supplements : -- Sump Pump Data Sheet 11305-01 -- Sump Pump Data Sheet 11305-02	This specification was reviewed in its entirety. Specific IQRPE review activities are described in the following sections of this report. -- 2.2.1.2 -- 2.2.1.3 -- 2.2.1.5	ASTM A48, Standard Specification for Gray Iron Castings ASTM A576, Standard Specification for Steel Bars, Carbon, Hot-Wrought, Special Quality
11306	Leachate Pumps Supplements -- Leachate Pump Data Sheet 11306-01 -- Leachate Pump Data Sheet 11306-02 -- Leachate Pump Data Sheet 11306-03	This specification was reviewed in its entirety. Specific IQRPE review activities are described in Section 2.2 of this report.	N/A

Document Number	Document Title	Comments	Associated Standards
11312	Horizontal End Suction Centrifugal Pumps Supplements -- Horizontal End Suction Centrifugal Pump Data Sheet 11312-01	This specification was reviewed in its entirety. Specific IQRPE review activities are described in Sections 2.2.1.5 and 2.2.3 of this report.	AISI Type 416 Stainless Steel AISI Type 1035 Steel AISI Type 1045 Carbon Steel AISI Type 4140 Alloy Steel ASTM A48, Standard Specification for Gray Iron Castings ASTM A53/A53M, Standard Specification for Pipe, Steel, Black and Hot-Dipped, Zinc Coated, Welded and Seamless ASTM A276, Standard Specification for Stainless Steel Bars and Shapes ASTM A576, Standard Specification Steel Bars,Carbon, Hot-Wrought, Special Quality ASTM B62, Standard Specification for Composition Bronze or Ounce Metal Castings ASTM B148, Standard Specification for Aluminum-Bronze Sand Castings ASTM B584, Standard Specification for Copper Alloy Sand Castings for General Applications NEMA MG 1, Motors and Generators

Document Number	Document Title	Comments	Associated Standards
13122	Metal Building Systems	This specification was reviewed in its entirety. Specific IQRPE review activities are described in the following sections of this report. -- 2.2.1.2 -- 2.2.1.5 -- 2.2.4.2 -- 2.2.4.5	AISC, Specification for Structural Steel for Buildings – Allowable Stress Design (ASD) AISI, Specification for the Design of Cold-Formed Steel Structural Members ASTM A36, Standard Specification for Carbon Structural Steel ASTM A53, Standard Specification for Pipe, Steel, Black and Hot-Dipped, Zinc-Coated, Welded and Seamless ASTM A325, Standard Specification for Structural Bolts, Steel, Heat-Treated 120/105 ksi Minimum Tensile Strength ASTM A500, Standard Specification for Cold-Formed Welded and Seamless Carbon Steel Structural Tubing in Rounds and Shapes ASTM A501, Standard Specification for Hot-Formed Welded and Seamless Carbon Steel Structural Tubing ASTM A529, Standard Specification for High-Strength, Carbon-Manganese Steel of Structural Quality ASTM A570, Standard Specification for Steel, Sheet and Strip, Carbon, Hot-Rolled, Structural Quality ASTM A572, Standard Specification for High-Strength, Low-Alloy Columbium-Vanadium Structural Steel ASTM A607, Standard Specification for Steel, Sheet and Strip, High-Strength, Low-Alloy, Columbium or Vanadium, or Both, Hot-Rolled, and Cold-Rolled ASTM F959, Standard Specification for Compressible-Washer-Type Direct Tension Indicator for Use with Structural Fasteners AWS D1.1, Structural Welding Code – Steel MBMA, Metal Building Manufacturer's Association UBC, Uniform Building Code SDI 100, Recommended Specifications for Standard Steel Doors and Frames SDI 117, Manufacturing Tolerances Standard Steel Doors and Frames

Document Number	Document Title	Comments	Associated Standards
13205	Lined Bolted Steel Liquid Storage Tanks	This specification was reviewed in its entirety. Specific IQRPE review activities are described in the following sections of this report. -- 2.2.1.4 -- 2.2.2 -- 2.2.3.4 -- 2.2.4.4 -- 2.2.6 -- 2.2.7	AWWA D103, Factory-Coated Bolted Steel Tanks for Water Storage AWWA D130, Flexible-Membrane-Lining and Floating-Cover Materials for Potable Water Storage ASTM A446, Steel Sheet, Zinc-Coated by the Hot-Dip Process, Structural Quality ASTM A525, General Requirements for Steel Sheet, Zinc-Coated by the Hot-Dip Process ASTM D413, Standard Test Methods for Rubber Property-Adhesion to Flexible Substrate ASTM D751, Standard Test Method for Coated Fabrics FS 5100, Preservation and Packing of Hand Tools; Tools and Tool Accessories for Power-Driven Metal Woodworking Machinery UBC, Uniform Building Code
13401	Process Instrumentation and Control Systems (PICS) Supplements: -- Instrument Listing for Cell No. 1 and Cell No. 2 -- Component Specifications -- PLC Input and Output List -- Loop Specifications	This specification was reviewed in its entirety. Specific IQRPE review activities are described in Section 2.2.4 of this report.	N/A

Document Number	Document Title	Comments	Associated Standards
15021	High Density Polyethylene (HDPE) Pipe Supplements: -- Attachment 1, HDPE Pipe	This specification was reviewed in its entirety. Specific IQRPE review activities are described in the following sections of this report. -- 2.2.1.1 -- 2.2.1.2 -- 2.2.1.3 -- 2.2.1.5 -- 2.2.1.6 -- 2.2.2	ASTM D792, Standard Test Methods for Density and Specific Gravity (Relative Density) of Plastics by Replacement ASTM D1248, Specification for Polyethylene Plastics Molding and Extrusion Materials ASTM D1505, Standard Test Method for Density of Plastics by the Density-Gradient Technique ASTM D2513, Specification for Thermoplastic Gas Pressure Pipe, Tubing, and Fittings ASTM D3350, Specification for Polyethylene Plastics Pipe and Fitting Materials ASTM F714, Standard Specification for Polyethylene Plastic Pipe (SDR-PR) Based on Outside Diameter
15022	HDPE Manholes	This specification was reviewed in its entirety. Specific IQRPE review activities are described in Sections 2.2.1.3 and 2.2.2 of this report.	ASTM D1248, Specification for Polyethylene Plastics Molding and Extrusions ASTM D3350, Specification for Polyethylene Plastics Pipe and Fitting Materials

Document Number	Document Title	Comments	Associated Standards
15060	Piping-General Supplements -- PVC Pipe and Fittings -- Galvanized Steel Pipe and Malleable Iron Fittings Piping Schedule	This specification was reviewed in its entirety. Specific IQRPE review activities are described in the following sections of this report. -- 2.2.1.2 -- 2.2.1.3 -- 2.2.1.5	ASTM A153, Standard Specification for Zinc Coating (Hot-Dip) on Iron and Steel Hardware ASTM A307, Standard Specification for Carbon Steel Bolts and Studs, 60,000 psi Tensile Strength ASTM A536, Standard Specification for Ductile Iron Castings ASTM A563, Standard Specification for Carbon and Alloy Steel Nuts ASTM D1248, Standard Specification for Polyethylene Plastics Molding and Extrusion Materials ASTM D1784, Standard Specification for Rigid Poly (Vinyl Chloride) (PVC) Compounds and Chlorinated Poly (Vinyl Chloride) (CPVC) Compounds ASTM D1785, Standard Specification for Poly (Vinyl Chloride) (PVC) Plastic Pipe, Schedules 40, 80, and 120 ASTM D2467, Standard Specification for Socket-Type Poly (Vinyl Chloride) (PVC) Plastic Pipe Fittings, Schedule 80 ASTM D2564, Standard Specification for Solvent Cements for Poly (Vinyl Chloride) (PVC) Plastic Piping Systems ASTM D3261, Standard Specification for Butt Heat Fusion Polyethylene (PE) Plastic Fittings for Polyethylene (PE) Plastic Pipe and Tubing ASTM D3350, Standard Specification for Polyethylene Plastics Pipe and Fittings Materials

Document Number	Document Title	Comments	Associated Standards
15100	Valves, Operators, and Filter	This specification was reviewed in its entirety. Specific IQRPE review activities are described in the following sections of this report. -- 2.2.1.2 -- 2.2.1.5 -- 2.2.1.6	ASTM A276, Standard Specification for Stainless and Heat-Resisting Bars and Shapes ASTM A351, Standard Specification for Castings, Austenitic-Ferric (Duplex), for Pressure-Containing Parts ASTM B61, Standard Specification for Steam or Valve Bronze Castings ASTM B62, Standard Specification for Composition Bronze or Ounce Metal Castings ASTM B98, Standard Specification for Copper-Silicon Alloy Rod, Bar, and Shapes ASTM B127, Standard Specification for Nickel-Copper Alloy (UNS N04400) Plate, Sheet, and Strip ASTM B139, Standard Specification for Phosphor Bronze Rod, Bar, and Shapes ASTM B164, Standard Specification for nickel-Copper Alloy Rod, Bar, and Wire ASTM B194, Standard Specification for Copper-Beryllium Alloy Plate, Sheet, Strip, and Rolled Bar ASTM B584, Standard Specification for Copper Alloy Sand Castings for General Applications ASTM D429, Test Methods for Rubber Property----- Adhesion to Rigid Substrates ASTM D1784, Standard Specification for Rigid Poly (Vinyl Chloride) (PVC) Compounds and Chlorinated Poly (Vinyl Chloride) (CPVC) Compounds
15140	Piping Support Systems	This specification was reviewed in its entirety. Specific IQRPE review activities are described in the following sections of this report. -- 2.2.1.2 -- 2.2.1.5 -- 2.2.1.6	ASTM A525, Standard Specification for General Requirements for Steel Sheet, Zinc-Coated (Galvanized) by the Hot-Dip Process
15992	Piping Leakage Testing	This specification was reviewed in its entirety. Specific IQRPE review activities pertinent to this specification are related to Sections 2.2.4.1 and 2.2.7 of this report.	N/A

Document Number	Document Title	Comments
IDF Drawings		
H-2-830824, Sht 1, Rev. B	IDF Title / Index / Location Maps	This drawing was reviewed for information purposes only. The IQRPE certification for the IDF Leachate Tank System does not address the specific content of this drawing.
H-2-830825, Shts 1-5, Rev. B	IDF Abbreviations / Legend / General Notes	This drawing was reviewed for information purposes only. The IQRPE certification for the IDF Leachate Tank System does not address the specific content of this drawing.
H-2-830827, Sht 1, Rev. A	IDF Overall Site Development Plan	This drawing was reviewed for information purposes only. The IQRPE certification for the IDF Leachate Tank System does not address the specific content of this drawing.
H-2-830828, Sht 1, Rev. A	IDF Cells 1 and 2 Site and Access Plan	This drawing was reviewed for information purposes only. The IQRPE certification for the IDF Leachate Tank System does not address the specific content of this drawing.
H-2-830829, Sht 2, Rev. B	IDF Cells 1 and 2 Subgrade Control	The tables on sheet 2 were reviewed for information purposes to determine system elevations and review piping slopes.
H-2-830831, Sht 1, Rev. B	IDF Site Access / Leachate Storage Partial Plans	This drawing was reviewed for information purposes in support of buried piping calculations.
H-2-830832, Sht 1, Rev. A	IDF Grading and Drainage Sections	This drawing was reviewed for information purposes as a basis for review of the LCRS and SLDS in the trench sumps.
H-2-830833, Sht 1, Rev. B	IDF Subgrade Layer Grading Sections	This drawing was reviewed for information purposes to examine the details of the earthfill at the crest of the trench.
H-2-830837, Sht 1, Rev. B	IDF Cells 1 and 2 Sump Partial Plans	This drawing was reviewed for information purposes as a basis for understanding where the LCRS and SLDS sump piping is to be placed.
H-2-830840, Sht 1, Rev. A	IDF Geosynthetics Sections and Details	This drawing was reviewed for information purposes as a basis for understanding how the LCRS and SLDS piping interfaces with the engineered trench barrier.

Document Number	Document Title	Comments
IDF Drawings		
H-2-830845, Sht 1, Rev. B	IDF Leachate Collection Piping Plan	This drawing was reviewed in its entirety. Specific IQRPE review activities are described in Section 2.2 of this report. This drawing is part of the IDF Dangerous Waste landfill design requirements.
H-2-830846, Sht 1, Rev. B	IDF Leachate Transfer Piping Plan	This drawing was reviewed in its entirety. Specific IQRPE review activities are described in Section 2.2 of this report. This drawing is part of the IDF Dangerous Waste landfill design requirements.
H-2-830847, Sht 1, Rev. A	IDF 219A & 219E Plan and Sections	This drawing was reviewed in its entirety. Specific IQRPE review activities are described in Section 2.2 of this report.
H-2-830848, Sht 1, Rev. B	IDF LCRS / LDS / SLDS Sections and Details	This drawing was reviewed for information with respect to the material compatibility and loading of the LCRS and the SLDS. This drawing is part of the IDF Dangerous Waste landfill design requirements.
H-2-830849, Shts 1-2, Rev. A	IDF SLDS Sections and Details	This drawing was reviewed in its entirety. Specific IQRPE review activities are described in Section 2.2 of this report.
H-2-830850, Sht 1, Rev. A	IDF LCRS/LDS Sections and Details	This drawing was reviewed in its entirety. Specific IQRPE review activities are described in Section 2.2 of this report. This drawing is part of the IDF Dangerous Waste landfill design requirements.
H-2-830851, Sht 1, Rev. A	219A1 & 219E1 Plan and Sections	This drawing was reviewed in its entirety. Specific IQRPE review activities are described in Section 2.2 of this report.
H-2-830852, Sht 1, Rev. A	IDF LCRS / LDS Section and Details	This drawing was reviewed in its entirety. Specific IQRPE review activities are described in Section 2.2 of this report.
H-2-830854, Shts 3 & 4, Rev. B	IDF Cell #1 and #2 P&ID	This drawing was reviewed in its entirety. Specific IQRPE review activities are described in Section 2.2 of this report.
H-2-830855, Sht 1, Rev. A	Process & Instrumentation Panel Elevation and Power Layout Diagram	This drawing was used for information purposes only. The IQRPE certification for the IDF Leachate Tank System does not address the specific content of this drawing.
H-2-830856, Sht 1, Rev. A	IDF Instrument Control Details	This drawing was reviewed in its entirety. Specific IQRPE review activities are described in Section 2.2 of this report.

Document Number	Document Title	Comments
IDF Drawings		
H-2-830857, Shts 1 & 2, Rev. A	IDF Instrument Control Diagrams	This drawing was reviewed in its entirety. Specific IQRPE review activities are described in Section 2.2 of this report.
H-2-830865, Sht 1, Rev. A	Crest Pad Buildings Plan and Elevations	This drawing was reviewed in its entirety. Specific IQRPE review activities are described in Section 2.2 of this report.
H-2-830866, Sht 1, Rev. A	Crest Pad Buildings Sections and Details	This drawing was reviewed in its entirety. Specific IQRPE review activities are described in Section 2.2 of this report.
H-2-830867, Sht 1, Rev. B	Truck Loading Stations Plan and Sections	This drawing was reviewed in its entirety. Specific IQRPE review activities are described in Section 2.2 of this report.
H-2-830868, Sht 1, Rev. B	Leachate Transfer Buildings Plan, Section and Elevation	This drawing was reviewed in its entirety. Specific IQRPE review activities are described in Section 2.2 of this report.
H-2-830869, Sht 1, Rev. A	Leachate Tank Foundation Plan; Section and Detail	This drawing was reviewed in its entirety. Specific IQRPE review activities are described in Section 2.2 of this report.
H-2-830870, Sht 1, Rev. A	IDF Structural Details (Structural notes, typical wall corner reinforcing)	This drawing was reviewed in its entirety. Specific IQRPE review activities are described in Section 2.2 of this report.
H-2-830871, Sht 1, Rev. A	IDF Structural Details (Waterstop details, anchor bolt details, etc.)	This drawing was reviewed in its entirety. Specific IQRPE review activities are described in Section 2.2 of this report.
H-2-830872, Sht 1, Rev. A	IDF Structural Details (Winch support, truck loading connection, PVC support)	This drawing was reviewed in its entirety. Specific IQRPE review activities are described in Section 2.2 of this report.
Environetics, Inc. Drawings (Rev. B)	Section 13205 - Lined Bolted Steel Liquid Storage Tanks Submittal Item – 144 – Tank and Equipment Drawings (sheets 1 – 23)	These drawings were reviewed in their entirety. Specific IQRPE review activities are described in Section 2.2 of this report.
CW Neal (Layfield Environmental Systems Corporation) Drawings (dated 9/8/05)	Tank Liner and Cover Drawings (sheets 1 – 3)	These drawings were reviewed in their entirety. Specific IQRPE review activities are described in Section 2.2 of this report.

Document Number	Document Title	Comments
Calculations		
RPP-18486 Rev. 0 Appendix C.7	Leachate Production Analyses	This calculation was reviewed in its entirety. Specific IQRPE review activities are described in Section 2.2 of this report.
RPP-18486 Rev. 0 Appendix C.8.a	Leachate System Loading Analyses	This calculation was reviewed in its entirety. Specific IQRPE review activities are described in Section 2.2.1.1 of this report.
RPP-18486 Rev. 0 Appendix C.8.b (rev. 1)	Leachate System Hydraulics Analyses	This calculation was reviewed in its entirety. Specific IQRPE review activities are described in Section 2.2.4 of this report.
RPP-18486 Rev. 0 Appendix C.8.c	Leachate Collection Storage	This calculation was reviewed in its entirety. Specific IQRPE review activities are described in Section 2.2 of this report.
RPP-18486 Rev. 0 Appendix C.10	LDS Action Leakage Rate	This calculation was reviewed in its entirety. Specific IQRPE review activities are described in Section 2.2 of this report.
RPP-18486 Rev. 0 Appendix C.11.b1	Crest Pad Building Foundation Analyses	This calculation was reviewed in its entirety. Specific IQRPE review activities are described in Section 2.2.1.2.a of this report.
RPP-18486 Rev. 0 Appendix C.11.b2	Crest Pad Building Winch Support	This calculation was reviewed in its entirety. Specific IQRPE review activities are described in Section 2.2.1.2.b of this report.
RPP-18486 Rev. 0 Appendix C.11.b3	Pipe Support	This calculation was reviewed in its entirety. Specific IQRPE review activities are described in Sections 2.2.1.2, 2.2.1.5, and 2.2.1.6 of this report.
RPP-18486 Rev. 0 Appendix C.11.c	Leachate Transfer Building Foundation Analysis	This calculation was reviewed in its entirety. Specific IQRPE review activities are described in Section 2.2.1.5 of this report.

Document Number	Document Title	Comments
Calculations		
RPP-18486 Rev. 0 Appendix C.11.d	Leachate Tank Foundation Analysis	This calculation was reviewed in its entirety. Specific IQRPE review activities are described in Section 2.2 .1.4 of this report.
RPP-18486 Rev. 0 Appendix C.11.e1	Truck Loading Station Foundation Analysis	This calculation was reviewed in its entirety. Specific IQRPE review activities are described in Section 2.2.1.6a of this report.
RPP-18486 Rev. 0 Appendix C.11.e2	Truck Loading Connection	This calculation was reviewed in its entirety. Specific IQRPE review activities are described in Section 2.2.1.6b of this report.
RPP-18486 Rev. 0 Appendix C.11.a	Geotechnical Design Parameters for Foundation Analyses	This calculation was reviewed in its entirety. Specific IQRPE review activities are described in Section 2.2.1 of this report.
Tank Industry Consultants (TIC) IDF Leachate calculations dated September 7, 2005	IDF Leachate Tank Structural Analysis	This calculation was reviewed in its entirety. Specific IQRPE review activities are described in Section 2.2.1.4 of this report.

Document Number	Document Title	Comments
Other Reports		
RPP-15833 Rev. 0B	System Specification for the Integrated Disposal Facility	This document was reviewed in its entirety. Specific IQRPE review activities are described in Section 2 of this report.
RPP-15479 Rev. 0A	IDF Project Definition Criteria (PDC)	This document was reviewed in its entirety. Specific IQRPE review activities are described in Section 2 of this report.
RPP-18486 Rev. 0	IDF Phase I Critical Systems Design – Design Report	This document was reviewed in its entirety. Specific IQRPE review activities are described in Section 2 of this report.
RPP-RPT-26312 Rev. 0	Integrated Disposal Facility (IDF) Leachate Tank Liner Compatibility Test Report	This document was reviewed in its entirety. Specific IQRPE review activities are described in Section 2.2 of this report.
RPP-18516 Rev. 0	Integrated Disposal Facility (IDF) Operations and Maintenance Philosophy	This document was reviewed in its entirety. Specific IQRPE review activities are described in Section 2 of this report.

ATTACHMENT B

ENVIRONMENTAL RESTORATION DISPOSAL FACILITY (ERDF)

LEACHATE TANK SYSTEM LESSONS LEARNED

(Two Sheets)

ATTACHMENT B

ENVIRONMENTAL RESTORATION DISPOSAL FACILITY (ERDF)

LEACHATE TANK SYSTEM LESSONS LEARNED

FW: leachate tank Page 1 of 1

This message has been scanned for known viruses.

From: Comstock, David C
To: RogerHWebb@aol.com
Subject: FW: leachate tank
Date: Fri, 18 Mar 2005 12:29:41 -0800
Files: leachate_tank.doc (25K)

ERDF Tank Lesson Learned

David Comstock, CH2M Project Engineer
Project: IDF
Phone: 372-3348; (Fax: 372-3378)
Location: 2440 STVCM/ 1613A (Mail Stop: H6-19)

http://d01.webmail.aol.com/display-message.aspx?version=_SRV_1_0_0_11984_ 3/23/2005

Lessons learned from the ERDF leachate tanks were incorporated into the design of the IDF leachate storage tanks. The IDF design team, during the Critical Systems design effort in early 2003, contacted ERDF staff to discuss the leachate storage tanks to learn from their experience. We also solicited input from the tank manufacturer. The IDF leachate tank specification development incorporated these inputs.

Examples of additions to the specification are:

- Requirement that the installation contractor for the tank must be certified by the manufacturer as a qualified installer. During the ERDF construction, the tank manufacturer had no input into the original installation effort.
- Submittal of a design assessment report by a registered professional engineer attesting that the tanks furnished have sufficient structural integrity and is acceptable for storing dangerous wastes.
- Submit an installation report which includes statements on the tank's tightness and certifying the tank system installation was proper.
- A rigorous tightness test is included
- Specifications includes a more extensive list of physical properties required for the liners and floating covers.

In addition, different from the ERDF tanks, those designed for IDF have a concrete ringwall and a stiffener angle at the top of the tank wall to stabilize the wall and eliminate the need for guy cables around its perimeter. Fillets are required at the base of the tank wall to ease the transition of the liners from the wall to the tank floor thereby removing this stress point.

ERDF staff also noted that maintaining approximately 1 foot of water in the tanks at all times has eliminated the liner leakage problems experience early in operational life of the tanks. This information will be conveyed to the operational contractor selected for IDF.

Both ERDF leachate storage tanks are still in service. It is our understanding that the tank liner systems do not have leaks. In their operation service, leachate from the ERDF cells are pumped directly to one tank, typically Leachate Storage Tank #2. Approximately every month, the leachate is pump out of the tank to the treatment facility in 200 E via a single wall transfer pipeline. Leachate Tank #1 is ready for service but is typically held in standby mode.

Tank # 1 had its primary liner replaced in 1999 as part of a warranty issue with the original contractor. The secondary liner and floating cover for this tank are the originals. For Tank #2, the primary and secondary liners and the floating cover are all original and have never been replaced. ERDF staff believe the floating cover sections leak on both tanks. It is unclear whether the cover leak is due to cover fabric damage or from the center vent on the floating cover.

The IDF leachate tank specification addresses design of the liner and cover system for the climatic conditions of this area. The tank manufacturer was contacted about the center vent of the floating cover and its stability. They noted that their vent installation design has changed and now uses an aluminum base plate. This approach replaces a PVC plate that was probably used for the ERDF tank covers. Regular pumping of precipitation accumulation from the cover is part of the normal operation for these tanks. Accumulation of water is therefore not expected and ice accumulation on the cover should not be an issue.

The tank manufacturer has confirmed that double-lined tanks with floating covers have been used successfully in other areas of the country with cold climates. Their company has not seen damage associated with ice accumulation on the floating cover. They noted that with regular pumping of precipitation water from the cover, ice should not accumulate. The tank manufacturer has stated that with proper installation, the floating cover will not leak. Further, the manufacturer will be submitting a letter to CH2M HILL that states their confidence the application of this tank type for the Hanford site.

In closing, the leachate design volume for the IDF facility cells is a substantial. Although there are several approaches to providing the needed storage, CH2M HILL believes that the double-lined, floating-cover tanks will provide storage and secondary containment required with a reasonable balance of capital and O&M costs.

ATTACHMENT C

MATERIALS COMPATABILITY ASSESSMENT

(Two Sheets)

GPI Greenman - Pedersen, Inc.

Engineers, Architects, Planners, Construction Engineers & Inspectors

Offices Throughout the United States

December 7, 2005

Mr. Roger Webb, P.E.
TECHNOGENERAL SERVICES, CO.
710 N 4th Avenue
Pasco, WA 99301

Subject: Integrated Disposal Facility (IDF) Leachate Tank System. Material Compatibility Review

Re: March 15, 2005 Letter (same subject)

Dear Roger:

This letter is a revision to my March 15, 2005 letter to incorporate changes that have been made to the design since the letter was distributed.

It is my understanding that the design (including materials selection) for Cell 1 and Cell 2 are to be identical.

I have completed the Integrated Disposal Facility (IDF) Leachate Tank System material compatibility review. The documents reviewed included:

- Integrated Disposal Facility Phase I Critical Systems Design- Design Report CRPP-18486, Rev. O, November 2003. Specific sections reviewed:
  - 5.6.2, Leachate Characterization Assumptions
  - 5.6.3, Chemical and Radiation Resistance
  - 6.4.1, Leachate Collection Piping
  - 6.4.2, Leachate Transfer Piping
  - 6.4.3, Leachate System Pumps
  - 6.5.5, Leachate Temporary Storage Tank.
- Integrated Disposal Facility Leachate Tank Liner Compatibility Test Report, CHG/DOE Review Draft, February 2005
- Construction Specification RPP-18489, Rev. 0A, Section 13205 –Lined Bolted Steel Liquid Storage Tanks.
- Construction Specification RPP- 18489, Rev. 0, Section 09900 – Paint Coating Systems.
- Construction Specification RPP- 18489, Rev. 0, Section 15021 – High Density Polyethylene (HDPE) Pipe.
- Construction Specification RPP- 18489, Rev. 0, Section15060 – Piping General
- Seaman Corporation, Technical Data and Specifications for XR Geomembranes
- U.S. DOE/CH2M HILL Drawings
  - H-2-830845 IDF Leachate Collection Plan
  - H-2-830846 IDF Leachate Transfer Piping Plan
  - H-2-830851 IFF 219A1 & 219E1 Plans & Sections
  - H-2-830852 IDF LCRS/LDS Section & Details
  - H-2-830867 IDF Truck Loading Stations Plan & Section

6218 Boardman Road, N.W., Olympia, WA 98502
Tel: (360) 866-2206 Fax: (360) 866-2279
www.gpinet.com

GPI

In review of the above literature, the following are a few observations.

1. Construction Specification RPP- 18489, Rev. 0, Section 09900 – Paint Coating Systems.
   a. The topcoat/finish coat system specified for the concrete truck loading area is Ameron PSX 700. The material is approved for Service Level II decontaminability and radiation tolerance. Test results have been received and verified.

2. Construction Specification RPP- 18489, Rev. 0, Section 13205 – Lined Bolted Steel Liquid Storage Tanks.
   a. The tank sheet material will receive an electrostatically applied, thermally cured, polyester powdercoat finish. This polyester powdercoat will be applied over a hot-dipped galvanized surface. If this coating system is not standard procedure for the tank manufacturer they should be advised that special precautions need to be taken to assure good adhesion of the polyester topcoat to the galvanized surface. Receipt inspection should include at least close visual inspection for coating defects, especially along edges and around bolt holes, looking for blisters or evidence of lifting of the powdercoat finish.

3. A schedule for inspection of coatings on concrete and steel should be established. A recommendation would be to inspect coatings within 3 – 4 months after initial installation and then at six month intervals thereafter. In the unlikely event of spills or leaks any coating exposed to the fluid should be closely inspected after cleanup. Samples of HDPE pipe and XR-5 liner material (with weights attached) could be attached to corrosion resistant lanyards for immersion in the leachate ponds and leachate tanks. Compare the initial weight of the samples before immersion with any weight gain after six months intervals.

The test results and data reviewed above indicate that the HDPE pipe and geomembrane pond liner and the Seaman Corporation XR-5 tank liner are well suited for long term exposure.

I would welcome the opportunity to discuss this further with you and your colleagues should the need arise.

Sincerely,
Greenman-Pedersen, Inc.

Web Chandler

Web Chandler, Assistant Vice President

NACE Certified Coatings Inspector #5578
SSPC Protective Coating Specialist #449-354-0829
Nuclear Safety Related Coating Specialist #NCS114

NACE Seal

ATTACHMENT D

IQRPE CIVIL / STRUCTURAL VERIFICATION CALCULATIONS

- **24993-R4-CALC-001, IQRPE Verification Calculation for Crest Pad Building Foundation**
- **24993-R4-CALC-002, IQRPE Verification Calculation for Leachate Transfer Building Foundation**
- **24993-R4-CALC-003, IQRPE Verification Calculation for Truck Loadout Station Foundation**

(17 Sheets)

- **24993-R4-CALC-001**

IQRPE Verification Calculation for Crest Pad Building Foundation

CALCULATION SHEET *TechnoGeneral Services*

NUMBER: 24993-84-CALC-001 REV: 0 DATE: 4/18/05

SUBJECT: CREST PAD BUILDING FOUNDATION

PROJECT No.: — PROJECT TITLE: IDF

REFERENCES:

1. H-2-830865 & H-2-830866
2. RPP-18486, APPENDIX C.11.b1, "CREST PAD BUILDING FOUNDATION ANALYSIS"
3. "CONCRETE FLOORS ON GROUND", J.A. FARMEY, PORTLAND CEMENT ASSOCIATION

The building is16 ft by 20 ft. The north and south walls are 20 ft long. Basically, the south half of the building has exterior 7 ft high 8 in thick concrete walls. There is one interior concrete wall 7 ft high 8 in thick. A pre-engineered metal building will complete the exterior structure. The foundation is a reinforced concrete slab-on-grade. The foundation under the exterior walls is 2 ft thick for a 2 ft width. The slab under the interior concrete wall is 14 in thick. There is a 3 ft by 3 ft by 3 ft deep sump near the southwest corner. The floor for most of the building interior is 8 in thick.

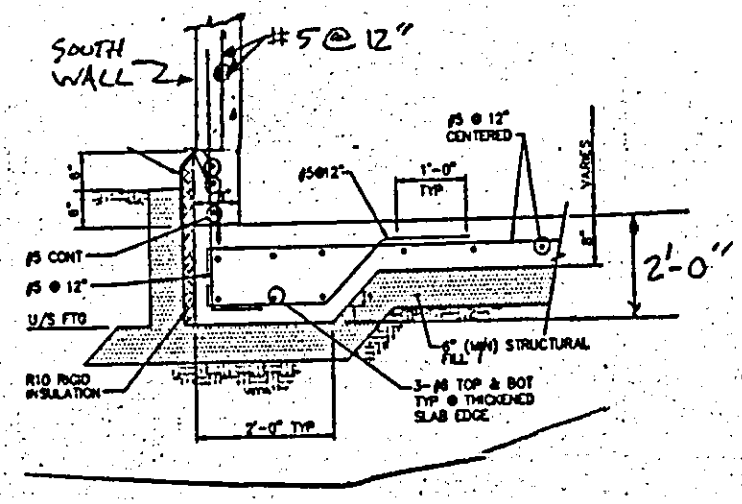

ORIGINATOR:	DATE:	CHECKER:	DATE:
VOLLERT	4/19/05	PH WEBB	4/18/05

Sheet 1 of 8

CALCULATION SHEET *TechnoGeneral Services*

NUMBER: 24993-R4-CALC-001 REV: 0 DATE: 4/18/05

SUBJECT: CREST PAD BUILDING FOUNDATION

PROJECT No.: - PROJECT TITLE: IDF

APPROACH:

ANALYZE INTERIOR SLAB AS A CONCRETE FLOOR ON GROUND WITH A DISTRIBUTED LOAD. SUMP FLOOR TO BE EVALUATED FOR BEARING PRESSURE BASED ON ALL DEAD & LIVE LOADS

FOR THE SOUTH WALL (MOST LOAD) ANALYZE THE 2' THICK SECTION AS A WALL FOOTING

SEISMIC LATERAL FORCE IS RESISTED BY THE CONCRETE WALLS AS IN-PLANE SHEAR

FLOOR SLAB:

USE REFERENCE 3, CHAPTER 5, DISTRIBUTED LOADS

$w = 0.123 f_t \sqrt{h \cdot K}$ = ALLOWABLE DISTRIBUTED LOAD (PSF)

f_t = CONCRETE WORKING STRESS

h = SLAB THICKNESS = 8"

K = SUBGRADE MODULUS (USE K = 50 PCI)

$f_t = \frac{MR}{S.F.} = \frac{\text{CONCRETE RUPTURE MODULUS}}{\text{SAFETY FACTOR}}$

FOR $f_c' = 4000$ PSI, MR = 640 PSI

USE S.F. = 2.2 THUS

$f_t = \frac{640}{2.2} = 291$ PSI

ORIGINATOR:	DATE:	CHECKER:	DATE:
VOLLERT	4/19/05	RH WEAB	4/18/05

Sheet 2 of 8

CALCULATION SHEET *TechnoGeneral Services*

NUMBER: 24993-RA-CALC-001 REV: 0 DATE: 4/18/05

SUBJECT: CREST PAD BUILDING FOUNDATION

PROJECT No.: – PROJECT TITLE: IDF

$w = 0.123 \times 291 \sqrt{8 \times 50} = 716$ PSF

FROM REFERENCE 2, FLOOR LIVE LOAD = 250 PSF

FLOOR SLAB 8" THICK IS ADEQUATE.

DISTRIBUTED REINFORCING STEEL

USE SUBGRADE DRAG FORMULA

$A_s = \frac{F L w}{2 f_s} \frac{IN^2}{FT}$ REINFORCING AREA REQUIRED

F = SUBGRADE COEF OF FRICTION 1.5 MIN RECOMMENDED

USE 2.0 (VERY SAFE)

L = SLAB LENGTH (USE 20 FT)

w = WEIGHT OF SLAB (100 PSF FOR 8" SLAB)

f_s = ALLOWABLE REINFORCING STRESS

USE $f_s = 0.67 f_y = 0.67 \times 60000 PSI = 40000$ PSI

$A_s = \frac{2.0 \times 20 \times 100}{2 \times 40000} = 0.05 IN^2/FT$

FROM REFERENCE 1, SLAB HAS #5 BAR @ 12" EW

THUS: $A_s = 0.31 \frac{IN^2}{FT} > 0.05 IN^2/FT$ COMFORTABLE

ORIGINATOR:	DATE:	CHECKER:	DATE:
VOLLERT	4/19/05	DLWARB	4/19/05

Sheet 3 of 8

CALCULATION SHEET *TechnoGeneral Services*

NUMBER: 24993-R4-CALC-001 REV: 0 DATE: 4/18/05

SUBJECT: CREST PAD BUILDING FOUNDATION

PROJECT No.: — PROJECT TITLE: IDF

SUMP FLOOR ANALYSIS

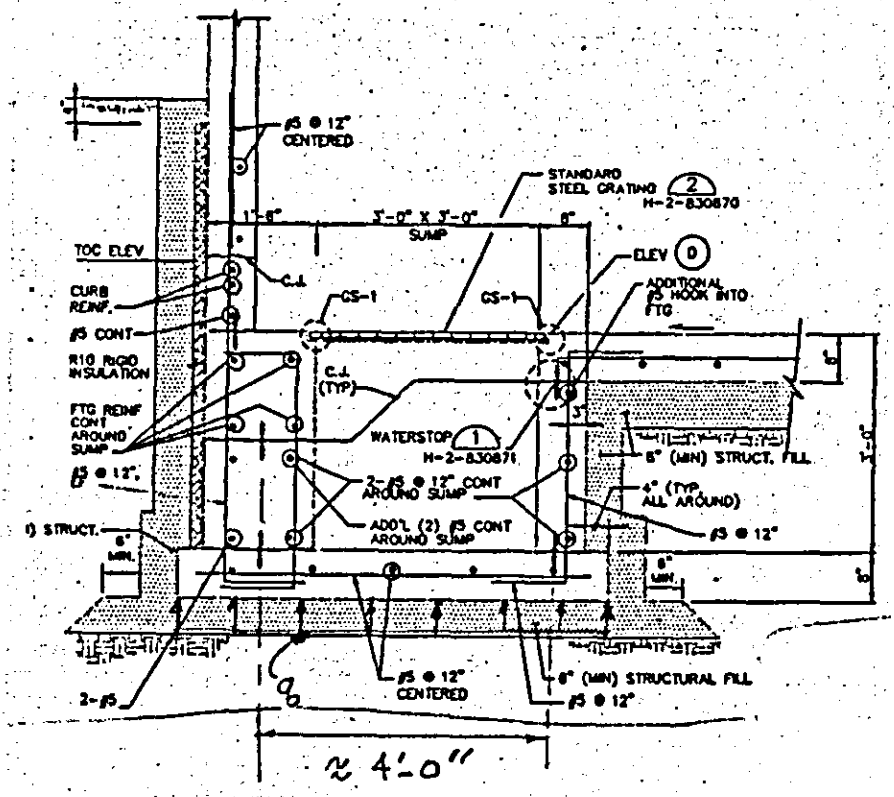

CALCULATE (q) BEARING LOAD UNDER SUMP AS ALL THE DEAD AND LIVE LOADS UNIFORMLY DISTRIBUTED. NEGLECT WIND; LARGELY UPLIFT. SEISMIC IS LATERAL LOAD CARRIED BY WALLS

ORIGINATOR:	DATE:	CHECKER:	DATE:
VOLLERT	4/19/05	RBW/FBB	4/19/05

Sheet 4 of 9

CALCULATION SHEET *TechnoGeneral Services*

NUMBER: 24993-R4-CALC-001 REV: 0 DATE: 4/18/05

SUBJECT: CRPST PAD BUILDING FOUNDATION

PROJECT No.: — PROJECT TITLE: IDF

SUMP FLOOR CONTINUED

BUILDING TOTAL DEAD LOAD = 38405 LB (REF 2)

$BDL = \frac{38405}{16 \times 21} = 114.3$ PSF

ROOF LIVE LOAD = 20 PSF + 10 PSF (COLLATERAL) (REF 1)

RLL = 30 PSF

SLAB DL = 64050 LB (REF 2)

$SDL = \frac{64050}{16 \times 21} = 190.6$ PSF

SLAB LL = 250 PSF (REF 2)

$q = 1.4\,\Sigma DL + 1.7\,\Sigma LL$

$q = 1.4\,(114.3 + 190.6) + 1.7\,(30 + 250)$

$q = 435.3 + 476 = 911.3$ PSF

PRESUME SUMP SLAB IS 4'-0" SPAN UNDER 1-WAY BENDING
SEE SKETCH, SHEET 4

$M = \frac{q\,(4)^2}{8} = 1822.6\ \frac{FT\text{-}LB}{FT} = 21871.2$ IN LB/FT

FROM 24993 R4-CALC-002 THE ALLOWABLE

$M_U = 41{,}086$ IN LB/FT (THICKNESS & REINF FOR SUMP SLABS IDENTICAL)

ORIGINATOR:	DATE:	CHECKER:	DATE:
VOLFRT	4/19/05	P H WEBB	4/19/05

Sheet 5 of 9

CALCULATION SHEET *TechnoGeneral Services*

NUMBER: 24993R4-CALC-001 REV: 0 DATE: 4/18/05

SUBJECT: CREST PAD BUILING FOUNDATION

PROJECT No.: — PROJECT TITLE: IDF

SUMP FLOOR CONTINUED

SLAB PERIMETER SHEAR

$$V = \frac{q \times 3^2}{4 \times 3} = 0.75\, q \frac{LB}{FT} = 683\ LB/FT$$

FROM 24993 R4-CALC-002 $V_c = 4338\ LB/FT$ ALLOWABLE

SOUTH WALL FOOTING (SEE SKETCH, SHEET 1)

SOUTH WALL LOADS

CONCRETE DL $= 150\,PCF \times \left(\frac{8}{12}\right)' \times 7' \times 1' = 107\ PLF$

STEEL DL $= 8PSF\left(3 \times 21 + \frac{21}{2} \times \frac{21}{2} \times \frac{3}{12}\right)\frac{1}{21} = 34.5\,PLF$ (8 PSF FROM REF 2)

ROOF DL $= \frac{11\,PSF \times 16 \times 22.5}{21} \times \frac{1}{2} = 94.3\,PLF$ (11 PSF FROM REF 2)

ROOF LL $\frac{(20+10)PSF(16 \times 22.5)}{21} \times \frac{1}{2} = 257.1\,PLF$ (30 PSF FROM REF 1)

NEGLECT WIND, MAINLY UPLIFT

SEISMIC: LATERAL LOAD RESISTED BY CONCRETE WALLS AS IN-PLANE SHEAR.

WT CONCRETE "FOOTING" SEE SKETCH NEXT SHEET

$$FDL = 150\,PCF\left[(2 \times 2) + \left(\frac{16 \times 8}{144}\right) + \left(\frac{16 \times 16}{2 \times 144}\right)\right] = 866.7\ PLF$$

ORIGINATOR:	DATE:	CHECKER:	DATE:
VOLLERT	4/19/05	RH WEBB	4/19/05

Sheet 6 of 8

CALCULATION SHEET *TechnoGeneral Services*

NUMBER: 2A993-R4-CALC-001 REV: 0 DATE: 4/19/05

SUBJECT: CREST PAD BUILDING FOUNDATION

PROJECT No.: — PROJECT TITLE: IDF

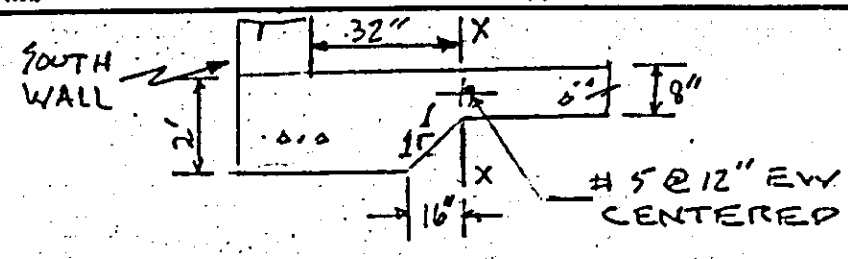

FOOTING LIVE LOAD

$FLL = 250\,PSF \times \frac{32}{12} \times 1 = 666.7\ PLF$ (250 PSF FROM REF 2)

SHEAR ACCROSS SECTION X-X 8" THICK WILL GOVERN

$V = 1.4\Sigma DL + 1.7\Sigma LL$

$V = 1.4(107 + 34.5 + 94.3 + 866.7) + 1.7(257.1 + 666.7)$

$V = 1543.5 + 1570.5 = 3114.0\ LB$

∴ ALLOWABLE SHEAR (V_c)

$V_c = 0.85 \times 12'' \times d \times 2\sqrt{f_c'}$ $f_c' = 4000\ PSI$

$d = 8 - (4 + \frac{5}{16}) = 3.69''$

$V_c = 4748\ LB > 3114\ LB$ OK

ORIGINATOR:	DATE:	CHECKER:	DATE:
VOLLEAT	4/19/05	[illegible]	4/19/05

Sheet 7 of 8

CALCULATION SHEET *TechnoGeneral Services*

NUMBER: 24993-R4-CALC-001 REV: 0 DATE: 4/19/05

SUBJECT: CREST PAD BUILDING FOUNDATION

PROJECT No.: — PROJECT TITLE: 10F

SEISMIC

FROM REF 2 SEISMIC LATERAL LOAD ON THE BUILDING $V_H \approx 22$ KIPS.

- V_H WILL BE RESISTED IN THE E-W DIRECTION BY THE SOUTH WALL, AND IN THE N-S DIRECTION BY THE EAST, WEST, + INTERIOR (CONCRETE) WALLS AS IN-PLANE SHEAR

SOUTH WALL 21 FT LONG, 8" THICK

SHEAR STRESS $v_c \approx \frac{1.5 V_H}{A}$; $A = 21FT \times 12 \times 8IN = 2016 IN^2$

$v_c = \frac{1.5 \times 22}{2016} = 0.0164 KSI = 16.4 PSI$ SOUTH WALL OK

EAST + WEST WALLS ARE 7 FT LONG, 8" THICK

- INTERIOR WALL IS $\approx$ 10 FT LONG, 8" THICK

EACH END WALL RESISTS $\frac{7}{24} V_H$

INTERIOR WALL RESISTS $\frac{10}{24} V_H$

END WALL $v_c = \frac{1.5 \times V_H}{7 \times 12 \times 8} \times \frac{7}{24} = 0.0143 KSI = 14.3 PSI$ END WALLS OK

INT WALL $v_c = \frac{1.5 \times V_H}{10 \times 12 \times 8} \times \frac{10}{24} = 0.0143 KSI = 14.3 PSI$ INT WALL OK

CONCRETE WALLS COMFORTABLY RESIST THE DESIGN SEISMIC LATERAL LOAD.

ORIGINATOR:	DATE:	CHECKER:	DATE:
VOLLERT	4/19/05	PHILLIPS	4/19/05

Sheet 8 of 8

- **24993-R4-CALC-002**

IQRPE Verification Calculation for Leachate Transfer Building Foundation

CALCULATION SHEET *TechnoGeneral Services*

NUMBER: 24793 R4-CALC-002 REV: 0 DATE: 4/14/05

SUBJECT: LEACHATE TRANSFER BUILDING FOUNDATION

PROJECT No.: — PROJECT TITLE: IDF

REFERENCES: H-2-830868, RPP-18486, APPROX C.11.C, "LEACHATE TRANSFER BUILDING FOUNDATION ANALYSIS"

GOVERNING STRUCTURAL ELEMENTS OF THE FOUNDATION ARE: THE SUMP FLOOR 2'-6" SQUARE, 8" THICK, AND THE 2'-6" LONG, 3'-8" HIGH, 12" THICK SUMP WALLS. THE LOAD ON THESE R/C ELEMENTS IS THE UPLIFT BEARING PRESSURE ON THE SUMP FLOOR. SEE SKETCH BELOW

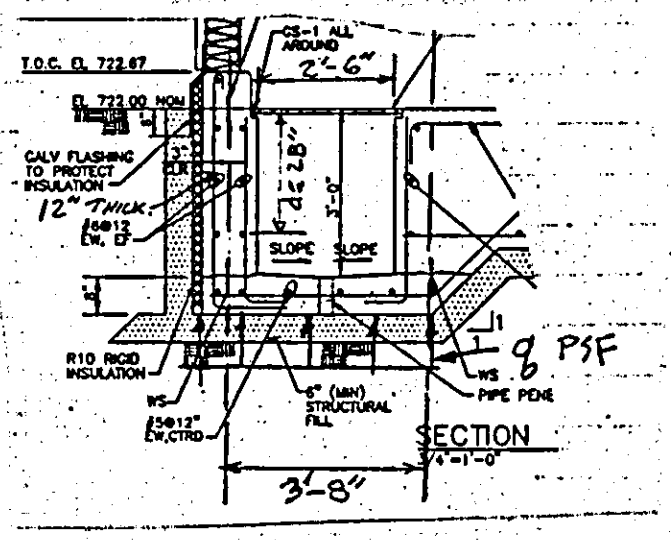

ORIGINATOR: VOLLERT	DATE: 4/14/05	CHECKER: PH WEB	DATE: 4/19/05

Sheet 1 of 3

CALCULATION SHEET *TechnoGeneral Services*

NUMBER: 24993-RH-CALC-002 REV: 0 DATE: 4/14/05

SUBJECT: LEACHATE TRANSFER BUILDING FOUNDATION

PROJECT No.: – PROJECT TITLE: IDF

BEARING PRESSURE q ON THE SUMP FLOOR USED WILL BE THE DEAD AND LIVE LOADS UNIFORMLY DISTRIBUTED ON THE FOUNDATION. THE WIND/SEISMIC LOADS FROM THE 12'x12' METAL BUILDING ARE NEGLIGIBLE.

BUILDING LL = 20 PSF + 10 PSF COLLATERAL = 30 PSF

SLAB LL = 100 PSF

SLAB DL = 375 PSF

BUILDING DL = $\frac{\text{BLDG WT}}{144\ \text{FT}^2} = \frac{3072}{144} = 21$ PSF

USE STRENGTH METHOD DESIGN ANALYSIS

THEREFORE: $q = 1.7\,LL + 1.4\,DL$

$q = 1.7(\text{SLAB LL} + \text{BLDG LL}) + 1.4(\text{SLAB DL} + \text{BLDG DL})$

$q = 1.7(100+30) + 1.4(375+21) = 768$ PSF

FROM SKETCH ON SHEET 1:

PRESUME SUMP SLAB IS 3'-8" SPAN UNDER 1-WAY BENDING

$M = \frac{q\left(\frac{44}{12}\right)^2}{8} = 1291\ \frac{\text{FT-LB}}{\text{FT}} = 15492$ IN LB/FT

$M_U = \phi A_s f_y d\left(1 - \frac{a}{2}\right)$ $\phi = 0.85$ REDUCTION FACTOR

ORIGINATOR:	DATE:	CHECKER:	DATE:
V. ALLERT	4/14/05	R.H. WEBB	4/19/05

Sheet 2 of 3

CALCULATION SHEET *TechnoGeneral Services*

NUMBER: 24493-24-CALC-002 REV: 0 DATE: 4/14/05

SUBJECT: LEACHATE TRANSFER BULDING FOUNDATION

PROJECT No.: – PROJECT TITLE: IDF

$d = 8'' - \left(4 + \frac{5}{8}\right) = 3.375''$, $A_s = 0.31\ IN^2/FT$

$f_y = 60000$ PSI (FOR STEEL)

$a = \frac{1.18\ A_s f_y}{b f_c'}$ (depth compression Block) $\left(1.18 = \frac{1}{0.85}\right)$

$a = \frac{1.18 \times 0.31 \times 60000}{12 \times 4000} = 0.46$

$M_U = 0.85 \times 0.31 \times 60000 \times 3.375 \left(1 - \frac{0.46}{2}\right)$ IN-LB/FT

$M_U = 41086$ IN-LB/FT > $M = 15492$ IN-LB/FT (OK)

SLAB PERIMETER SHEAR:

$V = \frac{q \times (2.5)^2}{4 \times 2.5} = 0.625\ q\ LB/FT = 480$ LB/FT

$V_c = \phi \times 2\sqrt{f_c'} \times 12d$ LB/FT (CAPACITY)

$V_c = 0.85 \times 126 \times 12 \times 3.375 = 4338$ LB/FT > V OK

WALL SHEAR:

LOAD ON WALL $w_w = q \times \frac{44}{12} \times \frac{1}{2} = 1408$ LB/FT

SHEAR FORCE ON ENDS:

$V = w_w \frac{L_w}{2} = 1408 \times \frac{2.5}{2} = 1760$ LB (OK)

CLEARLY WITHIN CAPACITY OF 12" THICK, 3'-8" HIGH WALL

ORIGINATOR:	DATE:	CHECKER:	DATE:
VOLLERT	4/14/05	PA WEBB	4/14/05

Sheet 3 of 3

- **24993-R4-CALC-003**

IQRPE Verification Calculation for Truck Loadout Station Foundation

CALCULATION SHEET *TechnoGeneral Services*

NUMBER: 24993-R4-CALC-003 REV: 0 DATE: 4/14/05

SUBJECT: TRUCK LOADING FOUNDATION ANALYSIS

PROJECT No.: — PROJECT TITLE: IDF

REFERENCES:

1. H-2-830867
2. "CONCRETE FLOORS ON GROUND", FARNY, J.A., PCA
3. RPP-18486, APPENDIX C.11.E1, "TRUCK LOADING FOUNDATION ANALYSIS"

GIVEN: DESIGN OF REINFORCED CONCRETE SLAB, H-2-830867

HS-20 TRUCK OVERLOADED TO 40 TON AXLES

72" WHEEL SPACING, SINGLE WHEEL

REQUIRED: EVALUATE REFERENCE 1 DESIGN USING DESIGN PROCEDURES FROM REFERENCE 2.

EVALUATE SLAB THICKNESS WITH DESIGN PROCEDURE FOR VEHICLE LOADS. CH 5, REF 2.

$f_c' = 4000$ PSI (FROM S. GOTO ANALYSIS)

f_r OR MODULUS OF RUPTURE (MR) $= 10 \times \sqrt{f_c'} = 640$ PSI (TENSILE STRENGTH)

USE S.F. $= \frac{1}{4.5} = 2.2$ (UNLIMITED REPITITIONS)

USE MODULUS OF SUBGRADE REACTION $k = 50$ PCI (VERY LOW FOR SITE)

JOINT FACTOR $= 1.0$ (NO JOINTS IN SLAB)

WORKING STRESS $= f_{tw} = \frac{MR}{(SF)\times(JF)} = \frac{640 \text{ PSI}}{2.2 \times 1.0} = 291$ PSI

TIRE CONTACT AREA $= A_{TC} = \frac{\text{WHEEL LOAD}}{\text{INFLATION PRESS}} = \frac{20000 \text{ LBS}}{100 \text{ PSI}}$

$A_{TC} = 200 \text{ IN}^2$

ORIGINATOR:	DATE:	CHECKER:	DATE:
VOLLERT	4/14/05	JH WEBB	4/14/05

Sheet 1 of 3

CALCULATION SHEET *TechnoGeneral Services*

NUMBER: 24993-24-CALC-003 REV: 0 DATE: 4/14/05

SUBJECT: TRUCK LOADING FOUNDATION ANALYSIS

PROJECT No.: — PROJECT TITLE: IDF

f_w = CONCRETE STRESS ALLOW / 1000 LB OF AXLE LOAD = $f_{t,w}/40$

$f_w = \frac{291}{40} = 7.3$ PSI

FROM CHART 5-4 REF 2.

REQUIRED SLAB THICKNESS 7.9 IN OR 10 IN MIN

12 IN SLAB THICKNESS REF 1 OK

NOTE: IF $f_c' = 5000$ PSI AS NOTED ON REF 1

A DESIGN ANALYSIS SIMILAR TO ABOVE ALSO SHOWS A 10 IN MIN SLAB THICKNESS.

REINFORCEMENT:

REF 2 SHOWS: #6 @10" T+B (EAST-WEST)

AND #5 @12" T+B (NORTH-SOUTH)

A_s = IN² STEEL/FT WIDTH

MIN A_s = 2#5 @ 12" = 2 × 0.31 ≐ 0.62 IN²/FT

FROM REF 2 FIG 6-14 DISTRIBUTED REINFORCEMENT SELECTION:

FOR A 50 FT SLAB 12 IN THICK

$A_s = 0.125$ IN²/FT < 0.62 IN²/FT

SLAB IS ADEQUATELY REINFORCED

NOTE: THE $A_s = 0.125$ IN²/FT VALUE BASED ON $f_s = 45$ KSI

45 KSI = 0.75 F_y = 0.75 × 60 KSI, OK FOR SLAB ON GROUND.

ORIGINATOR:	DATE:	CHECKER:	DATE:
VOLLERT	4/14/05	RH WEBB	4/19/05

Sheet 2 of 3

CALCULATION SHEET *TechnoGeneral Services*

NUMBER: 24993-RA-CALC-009 REV: 0 DATE: 4/19/05

SUBJECT: TRUCK LOADING FOUNDATION ANALYSIS

PROJECT No.: — PROJECT TITLE: IDF

Center Sumps

References 1 and 3 do not show the following dimensions:
The diameter of the grating frame and lid
The concrete overhang that supports the grating

References 1 and 3 do not confirm the grating and concrete overhang are rated (designed) for a 20 kip wheel load.

Reference 3 should recommend or reference any operating procedures necessary to prevent placing a 20 kip wheel directly on a sump grating.

ORIGINATOR:	DATE:	CHECKER:	DATE:
VOLLERT	4/19/05	RH WERA	4/19/05

Sheet 3 of 3

ENGINEERING DATA TRANSMITTAL

S

1. EDT 822281
1A. Page 1 of 1

2. To: (Receiving Organization) Distribution	3. From: (Originating Organization) ATS Engineering	4. Related EDT No.: N/A
		5. Structure Location: IDF, 200E
6. Proj./Prog./Dept./Div.: Integrated Disposal Facility	7. Responsible Engineer/Design Agent: H. L. Baune	8. System Designator: N/A
		9. Building No.: N/A
10. Originator Remarks: These IQRPE Installation Assessement Reports are being issued for approval and release.		11. Equipment ID No. (EIN): N/A
		12. Permit/Permit Application No.: WA7890008967 Part III OU11
13. USQ No.: N/A Date: N/A ☒ N/A	13(A). TBDs or HOLDs In the Data Transmitted? ☐ Yes ☒ No	14. Purchase Order No.: N/A
	13(B). Project Number or Identifier: Integrated Disposal Facility	15. Required Response Date: N/A

16. DATA TRANSMITTED

(A) Item No.	(B) Document/Drawing No.	(C) Sheet No.	(D) Rev. No.	(E) Title or Description of Data Transmitted	(F) Hard-copy or PDF	(G) Approval Designator	(H) Reason for Transmittal	(I) Originator Disposition	(J) Receiver Disposition
1 *	RPP-RPT-29447	N/A	0	Independent Qualified Registered Professional	H	E	1	1	1
				Engineer Installation Assessment Report For					
				The Integrated Disposal Facility (IDF) Leachate					
				Tank System (Cell 1)					
2	RPP-RPT-29448	N/A	0	Independent Qualified Registered Professional	H	E	1	1	1
				Engineer Installation Assessment Report For					
				The Integrated Disposal Facility (IDF) Leachate					
				Tank System (Cell 2)					

17. IMPACTED DOCUMENTS – NON ENGINEERING		18. IMPACTED DOCUMENTS – ENGINEERING	
Type of Document	Document Number	Type of Document	Document Number
N/A	N/A	N/A	N/A

19. KEY

Approval Designator (G)	Reason for Transmittal (H)	Disposition (I)
See TFC-ENG-DESIGN-C-25	1. Approval 2. Review 3. Distribution	1. Approved 2. Approved w/comment 3. Reviewed no comment 4. Reviewed w/comment 5. Disapproved

20. SIGNATURE/DISTRIBUTION

(H) Reason	(I) Disp.	(J) Name	(K) Signature	(L) Date	(M) MSIN	(H) Reason	(I) Disp.	(J) Name	(K) Signature	(L) Date	(M) MSIN
1	1	Originator H. L. Baune	H L Baune	10/26/06	T6-04	3	N/A	K. A. Colosi			T6-04
1	1	Resp. Engr. H. L. Baune	H L Baune	10/26/06	T6-04			N/A			
1	1	Resp. Mgr. S. L. Brey	[signature]	10/26/06	T6-04			N/A			
		QA N/A						N/A			
		IH&S Engr. N/A						N/A			
1	1	Env. Engr. T. A. Wooley	for [signature] * (6H)	11/2/06	H6-03						
1	1	Project Manager G. L. Parsons	[signature]	10/26/06	T6-04						
3	N/A	IDF Project Files			R1-29						
3	N/A	D. C. Comstock			T6-04						

21. DOE APPROVAL (if required)

Ctrl. No. N/A

22. Release Date/Station/ID NOV 02 2006 STA: 15

65

BD-7400-172.2 (02/06)

Independent Qualified Registered Professional Engineer Installation Assessment Report for the Integrated Disposal Facility (IDF) Leachate Tank System (Cell 2)

Prepared for H.L. Baune
CH2M HILL Hanford Group, Inc.
Richland, WA 99352
U.S. Department of Energy Contract DE-AC27-99RL14047

EDT/ECN: EDT-822281 UC:
Cost Center: Charge Code:
B&R Code: Total Pages: 32

Key Words: IDF, Integrated, Disposal, Facility, IQRPE, Independent, Qualified, Professional, Registered, Engineer, Installation, Cell 2, Tank, Leachate, WAC.

Abstract: This IQRPE Installation Assessment Report certifies the IDF Leachate Tank System (Cell 2) including all secondary containment design features was correctly installed and meets the requirements of Washington Administrative Code (WAC) 173-303-640 (3) and (4).

TRADEMARK DISCLAIMER. Reference herein to any specific commercial product, process, or service by trade name, trademark, manufacturer, or otherwise, does not necessarily constitute or imply its endorsement, recommendation, or favoring by the United States Government or any agency thereof or its contractors or subcontractors.

Printed in the United States of America. To obtain copies of this document, contact: Document Control Services, P.O. Box 950, Mailstop H6-08, Richland WA 99352, Phone (509) 372-2420; Fax (509) 376-4989.

NOV 0 2 2006
DATE:
STA: 15
HANFORD RELEASE
ID: 65

Release Approval Date

Release Stamp

Approved For Public Release

Independent Qualified Registered Professional Engineer (IQRPE) Installation Assessment Report For The Integrated Disposal Facility (IDF) Leachate Tank System (Cell 2)

CH2M HILL Requisition No. 116229

IQRPE Installation Assessment Report No. IR-103, Rev. 0

Prepared:

Roger H. Webb, PE
PRL Enterprises, LLC
1903 Tamarack Ct.
West Richland, Washington 99353
For
TechnoGeneral Services Company

Approved:

Robert L. Goodman, Jr., PE, Chief Engineer
TechnoGeneral Services Company
1840 Terminal Drive
Richland, Washington 99354

For

CH2M HILL Hanford Group, Inc.
PO Box 1500
Richland, Washington 99352

October 24, 2006

Table of Contents

1.0 INTRODUCTION 4
1.1 Purpose 4
1.2 Scope 4

2.0 INSTALLATION AND TIGHTNESS ASSESSMENT 11
2.1 HDPE Underground Transfer Pipe 17
2.2 Crest Pad Building and Ancillary Equipment 18
2.2.1 Crest Pad Building (including foundation, sump, curbs, and walls) 18
2.2.2 Crest Pad Building Ancillary Equipment 19
2.3 Combined Sump and Ancillary Equipment 20
2.3.1 Combined Sump 20
2.3.2 Combined Sump Ancillary Equipment 20
2.4 Leachate 90-Day Accumulation Tank 21
2.5 Leachate Transfer Building and Ancillary Equipment 22
2.5.1 Leachate Transfer Building (including foundation and sump) 22
2.5.2 Leachate Transfer Building Ancillary Equipment 23
2.6 Truck Loading Station and Ancillary Equipment 24
2.6.1 Truck Loading Station Foundation (including sumps) 24
2.6.2 Truck Loading Station Ancillary Equipment 24

3.0 NON-CONFORMING ITEMS AND INSTALLATION REPAIRS 25

4.0 EXCLUSIONS 28

5.0 CERTIFICATION 29

6.0 REFERENCES 30

Tables

Table 1. IQRPE Installation Inspection Records 12

Table 2. List of Cell 2 Leachate Tank System Related Dispositioned Non-Conforming Report Items 25

Table 3. Items Identified During Site Inspection Which Were Repaired During Installation 27

Figures

Figure 1. Integrated Disposal Facility Location 6

Figure 2. As-Built IDF Leachate Collection Piping Plan 7

Figure 3. As-Built IDF Leachate Transfer Piping Plan 8

Figure 4. As-Built Combined Sump and Leachate Tank Liner Penetration Details 9

Figure 5. As-Built IDF Leachate Tank Foundation and Structure 10

1.0 INTRODUCTION

The Hanford Integrated Disposal Facility (IDF) is designed to provide the capability for near-surface disposal of Immobilized Low-Activity Waste (ILAW) waste packages primarily from the River Protection Project—Waste Treatment Plant (RPP—WTP). Mixed waste disposed at the IDF will be limited to vitrified low-activity waste (LAW) from the RPP—WTP and the Demonstration Bulk Vitrification System (DBVS). Additionally, mixed waste generated by IDF operations will be disposed of in the IDF. IDF Cell 1 is Resource Conservation and Recovery Act of 1976 (RCRA) permitted and will provide disposal for both. IDF Cell 2 is not RCRA permitted and is intended only to provide disposal for the vitrified LAW mixed waste.

The IDF is located in southeastern Washington State on the Hanford site in the 200 East area (See Figure 1). The IDF is essential to the U.S. Department of Energy-Office of River Protection (DOE-ORP) mission to store, retrieve, treat, and dispose of the radioactive Hanford tank waste in an environmentally sound, safe, and cost-effective manner.

"IQRPE Design Assessment Report DR-102, Rev. 0 (RPP-RPT-27414)" provides the Independent Qualified Registered Professional Engineer (IQRPE) design assessment for Cell 2. TechnoGeneral Services Company (TGS) has prepared this IQRPE Installation Report at the request of CH2M HILL Hanford Group, Inc (CHG). TGS is the IQRPE of record for this project.

1.1 Purpose

The purpose of this report is to certify that the IDF Leachate Tank System (Cell 2) including all secondary containment design features, hereafter known as the Leachate Tank System, was installed correctly and meets the requirements of Washington Administrative Code (WAC) 173-303-640 (3) and (4).

1.2 Scope

The design and installation for the Leachate Tank System in TGS "IQRPE Report DR-102, Rev. 0" and this report has been assessed. The tank system installation activities have been independently witnessed and reviewed prior to backfilling of any relevant tank components to ensure that there are no:

- Weld breaks,
- Punctures,
- Damage to protective coatings,
- Cracks, or
- Other structural damage or inadequate construction/installation.

Pipeline 219E201-2"-LTCP-036 was buried prior to IQRPE inspection; however, a review of construction records indicate this pipeline was adequately installed.

The scope includes the verification of proper installation (compliance with the design and specifications) and required acceptance testing of the following including secondary containment design items:

- High-density polyethylene (HDPE) underground transfer pipelines (including applicable Leachate Collection and Removal [LCRS], Leak Detection System [LDS] and Secondary Leak Detection System [SLDS] items),
- Crest Pad Building foundation, sump, and ancillary equipment,
- Combined Sump and ancillary equipment,
- Leachate 90-day Accumulation Tank,
- Leachate Transfer Building foundation, sump, and ancillary equipment,
- Truck Loading Station foundation, sumps, and ancillary equipment.

As-built drawings of the major components of the Leachate Tank System are shown in Figures 2 through 5 and are referenced in the report sections as applicable.

Inspections during construction were performed with the guidance of the "IQRPE Inspection Plan Report IP-101, Rev. 0 (RPP-PLAN-26730)."

Utilities, such as water, electrical and lights, are not included in this certification.

A cathodic protection system was not required in the design.

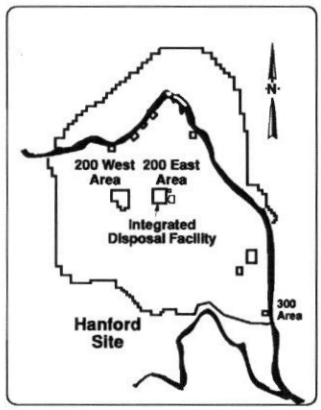

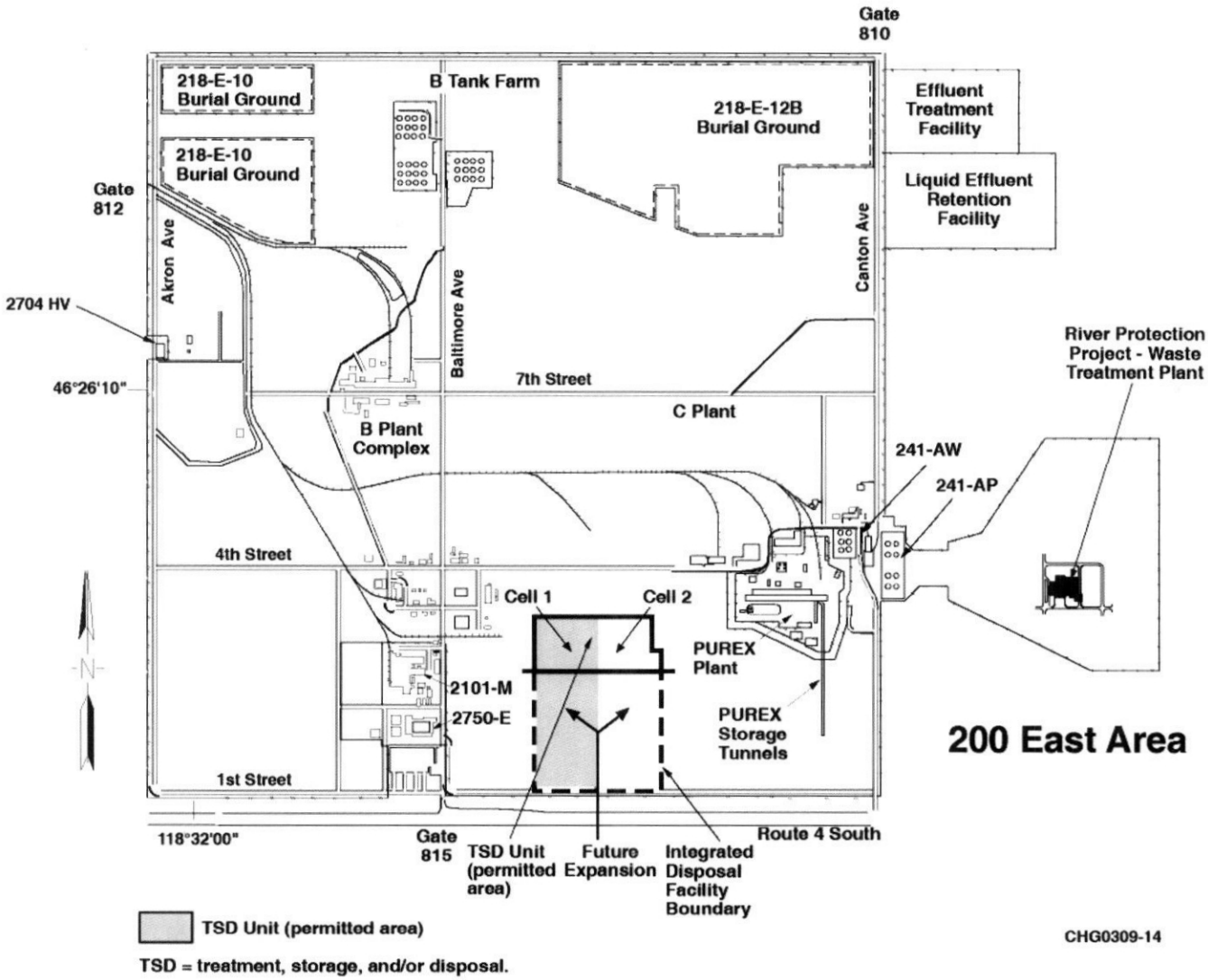

TSD = treatment, storage, and/or disposal.

Figure 1. Integrated Disposal Facility Location

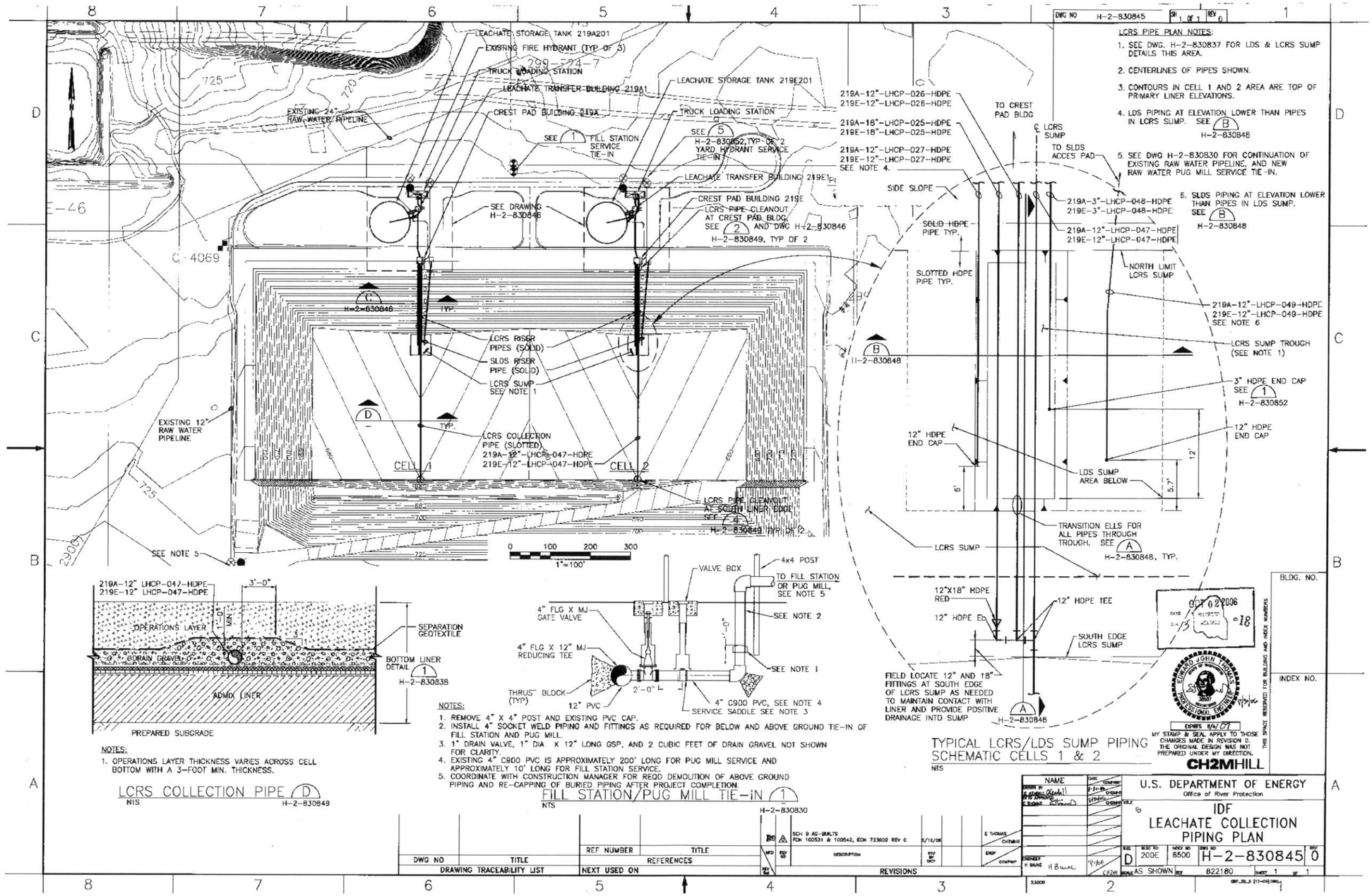

Figure 2. As-Built - IDF Leachate Collection Piping Plan

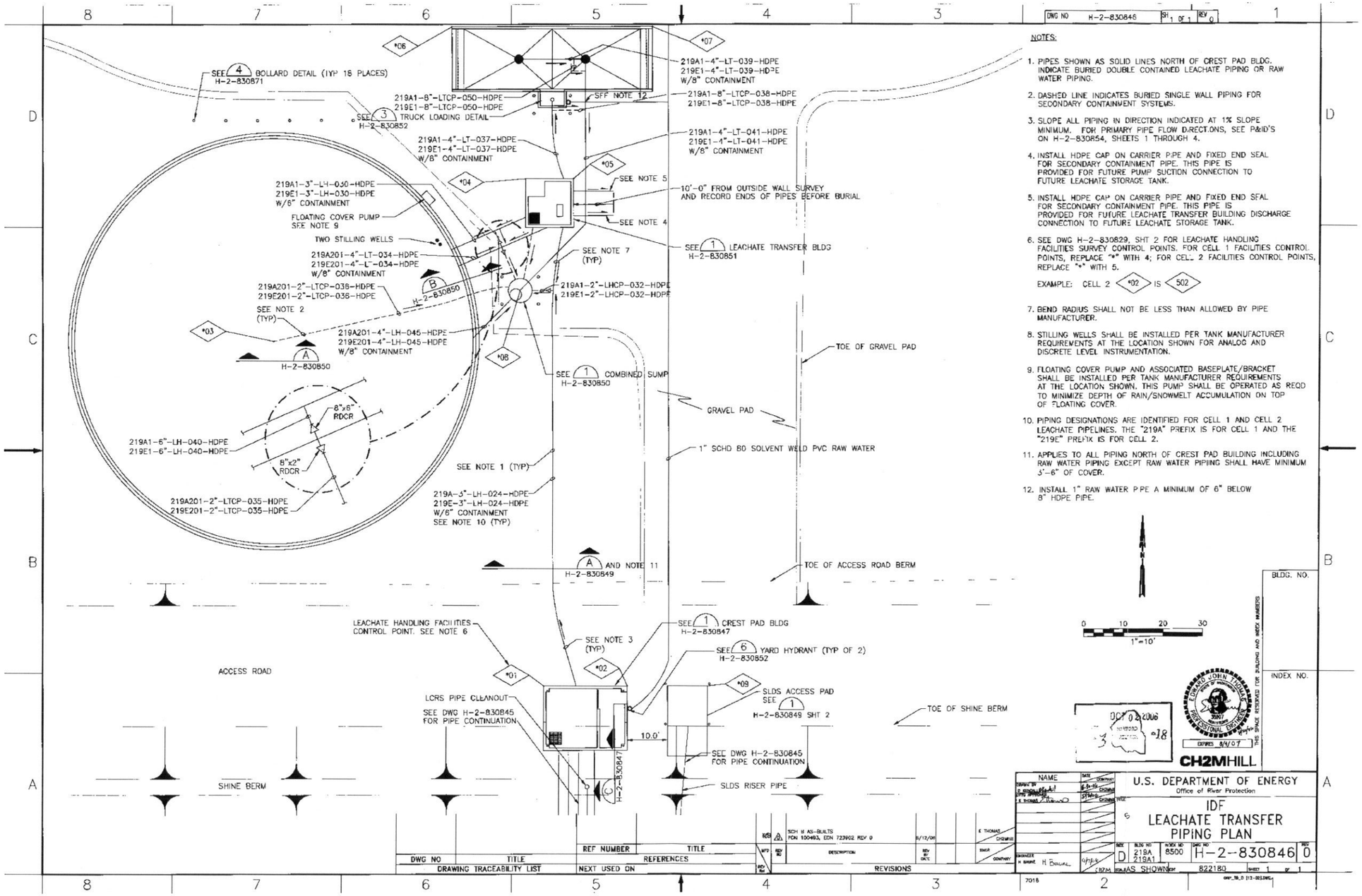

Figure 3. As-Built - IDF Leachate Transfer Piping Plan

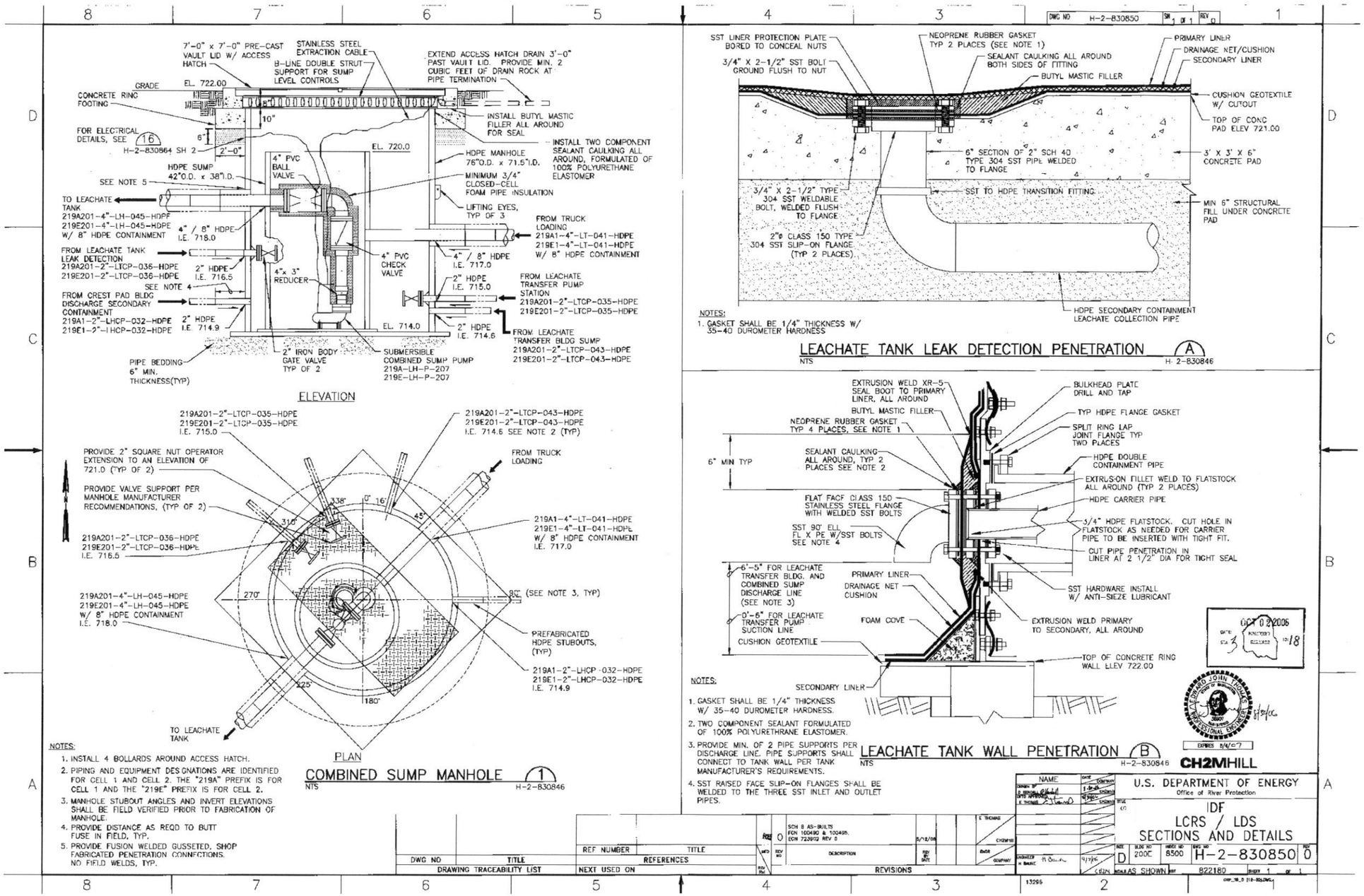

Figure 4. As-Built - Combined Sump and Leachate Tank Liner Penetration Details

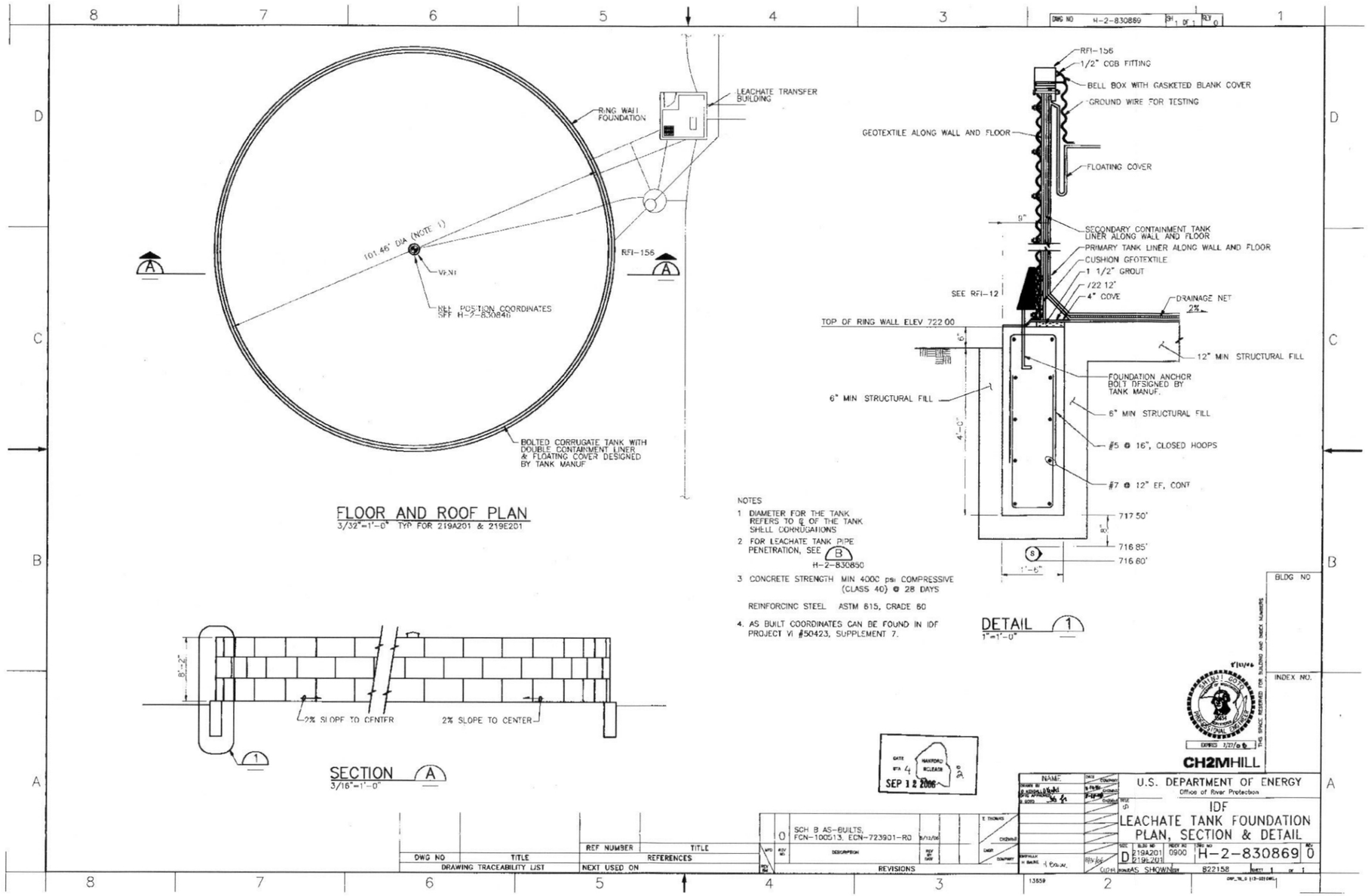

Figure 5. As-Built - IDF Leachate Tank Foundation and Structure

2.0 INSTALLATION AND TIGHTNESS ASSESSMENT

The Leachate Tank System includes the following major components for IQRPE installation certification:

- HDPE Underground Transfer Pipelines (including piping and pumps for the LCRS, the LDS and the SLDS piping)
- Crest Pad Building (including the foundation and sump) and Ancillary Equipment
  - Winch and support stands
  - Sump pump
  - Valves, leak detection elements and switches, flow meters, pressure sensors, and polyvinyl chloride (PVC) pipelines and associated supports necessary for the leachate transfer through the Crest Pad Building.
- Combined Sump and Ancillary Equipment
  - Inner HDPE manhole (leak detection chamber)
  - Outer sump
  - Submersible pumps
  - Valves
  - Level switches (including instrumentation and control)
- Leachate 90-Day Accumulation Tank (foundation, steel tank structure, primary and secondary liner, floating cover and water removal pump, tank inlet/outlet pipe penetrations [including above grade HDPE pipes and heat trace])
- Leachate Transfer Building (including the foundation and sump) and Ancillary Equipment
  - Leachate pump
  - Valves, flow meters, PVC pipelines and associated supports necessary for the leachate transfer through the Leachate Transfer Building.
- Truck Loading Station and Ancillary Equipment
  - Foundation
  - Sumps and sump covers
  - Upright Truck Loading Connection (including structure, piping, associated valves and heat trace)

Vendor submittals identified in the "IQRPE Inspection Plan Report IP-101, Rev. 0 (RPP-PLAN-26730)" have been reviewed and found adequate for tank installation certification. The project field change notice (FCN) and engineering change notice (ECN) logs were reviewed periodically

during installation and any FCNs or ECNs impacting the IQRPE scope were reviewed. The IQRPE has determined that all FCNs and ECNs reviewed show that the installation meets the requirements of WAC 173-303-640.

Table 1 contains a list of the IQRPE Inspection Reports. The records required for inspection activities were previously identified in the inspection plan and many of these records document system tightness after installation and prior to service. TGS provided the completed inspection reports to CHG as they were generated during the construction installation and testing activities. WAC 173-303-640 (3) (h) requires that the IQRPE Inspection Reports be included in the Operating Record and kept at the facility. CHG will maintain copies of the IQRPE Inspection Reports in the Operating Record in accordance with the guidance in Ecology Publication 94-114.

All pipeline pressure testing was completed as sections were installed and prior to being covered. The proper placement and backfill of underground components was confirmed with the review of available construction records and verified through discussions with the DelHur Quality Assurance Manager and the CHG Construction Field Engineer.

All component CATs (CCATs) and system CATs (SCATs) documented in DelHur 2006a were reviewed by TGS and found to be acceptable. The Title III Engineer's technical memorandum, "IDF Cell 1 and 2 Tanks – Acceptance Criteria and Re-Certification Recommendations", and the contractor's "Tanks Installation Inspection Report", were reviewed and the IQRPE concurs with the data documented in these reports.

The IQRPE concurs with the Design Agent's recommendations for inspection intervals as given in the IDF Critical Systems Design Report. This includes incorporating vendor-recommended inspections and maintenance for ancillary equipment into operations procedures. The need for additional periodic inspections will be determined by the Owner/Operator in accordance with WAC 173-303-640(6).

TGS IQRPE inspections were performed by F. Ray Vollert, PE, TGS; Chris Mitchell, CWI, ISI Inspections; and Roger Webb, PE, PRL Enterprises, LLC. All TGS IQRPE Inspection Reports were reviewed and approved by Robert L. Goodman, Jr., PE, TGS Chief Engineer.

Table 1. TGS IQRPE Installation Inspection Reports

INSPECTION REPORT	SUMMARY	COMPONENT INSPECTED
I-Cell2-Gen-001	Initiate Site IQRPE Visits	site
LCRS & LDS		
I-PIPE-002	Pneumatic Test, LDS Pump Riser Pipe	219E-12"-LHCP-027-HDPE
I-PIPE-003	Pneumatic Test, LCRS 12" Pipes	-- 219E-12"-LHCP-026-HDPE -- 219E-12"-LHCP-047-HDPE

INSPECTION REPORT	SUMMARY	COMPONENT INSPECTED
I-PIPE-004	Insertion Test, LCRS and LDS Pipes	-- 219E-18"-LHCP-025-HDPE -- 219E-12"-LHCP-026-HDPE -- 219E-3"-LHCP-048-HDPE
I-PIPE-006	Pneumatic Test of Riser Extension Joints	-- 219E-12"-LHCP-026-HDPE -- 219E-12"-LHCP-027-HDPE -- 219E-12"-LHCP-047-HDPE
I-PIPE-013	Pneumatic Tests of Riser Extension Joints	219E-18"-LHCP-025-HDPE
I-PIPE-014	Hydrostatic Tests, LCRS Low-Flow and LDS Piping (both cells)	-- 219E-1.5"-LH-009-HDPE -- 219E-1.5"-LH-015-HDPE
I-PIPE-015	High-Flow LCRS Piping Hydrostatic Test (both cells)	219E-3"-LH-001-HDPE
I-PIPE-024	LCRS Low-flow and LDS 1 ½ in. Transfer Pipe Hydrostatic Test (both cells)	-- 219E-1.5"-LH-009-HDPE -- 219E-1.5"-LH-015-HDPE
SLDS		
I-FDN-037	Forms, Reinforcing, and Concrete Placement (both cells)	SLDS Splash Pad
HDPE Transfer Piping		
I-PIPE-001	Fusion Welded HDPE Pipe Joints	General

INSPECTION REPORT	SUMMARY	COMPONENT INSPECTED
I-PIPE-005	Pneumatic and Hydrostatic Tests & Cell 2 Combined Sump (hydrostatic only)	-- 219E201-2"-LTCP-036-HDPE -- 219E-3"-LH-024-HDPE (carrier) -- 219E-3"-LH-024-HDPE (cont.) -- 219E1-2"-LHCP-032-HDPE (cont.) -- 219E1-4"-LT-039-HDPE (carrier) -- 219E1-4"-LT-041-HDPE (carrier) -- 219E1-4"-LT-037-HDPE (carrier) -- 219E1-4"-LT-037-HDPE (cont.) -- 219E1-4"-LT-039-HDPE (cont.) -- 219E1-4"-LT-041-HDPE (cont.) -- 219E1-8"-LTCP-038-HDPE (cont.) -- 219E1-8"-LTCP-050-HDPE (cont.) -- 219E201-3"-LH-030-HDPE (carrier) -- 219E201-4"-LH-034-HDPE (carrier) -- future pump suction (3" carrier) -- future discharge (4" carrier) -- future pump suction (6" cont.) -- future discharge (8" cont.) -- 219E201-4"-LH-045-HDPE (carrier) -- 219E201-4"-LH-045-HDPE (cont.)
Crest Pad Building		
I-FDN-004	Forms and Reinforcing	Crest Pad Building (sump base slab)
I-FDN-005	Concrete Placement	Crest Pad Building (sump base slab)
I-FDN-006	Forms and Reinforcing	Crest Pad Building (sump walls)
I-FDN-007	Concrete Placement	Crest Pad Building (sump walls)

INSPECTION REPORT	SUMMARY	COMPONENT INSPECTED
I-FDN-016	Forms and Reinforcement	Crest Pad Building (foundation)
I-FDN-017	Concrete Placement	Crest Pad Building (foundation)
I-FDN-026	Forms and Reinforcing	Crest Pad Building (walls and curbs)
I-FDN-027	Concrete Placement	Crest Pad Building (walls and curbs)
I-FDN-038	Coating Adhesion Pull off Test	Crest Pad Building concrete coating
I-PIPE-017	Hydrostatic Testing of PVC Ancillary Pipe and Functional Valve Testing	Crest Pad Building ancillary equipment (PVC piping and valves)
Combined Sump		
I-PIPE-005	Pneumatic and Hydrostatic Tests & Cell 2 Combined Sump (hydrostatic only)	219E-LH-M-207
I-FDN-026	Forms and Reinforcing	Combined Sump (ring footings)
I-FDN-027	Concrete Placement	Combined Sump (ring footings)
I-PIPE-023	Combined Sump Pump Operational Test (both cells); CAT-PC-207-E	219E-LH-P-207
Leachate Transfer Building		
I-FDN-012	Forms and Reinforcing	Leachate Transfer Building (sump base slab)
I-FDN-013	Concrete Placement	Leachate Transfer Building (sump base slab)
I-FDN-016	Forms and Reinforcement	Leachate Transfer Building (foundation)
I-FDN-017	Concrete Placement	Leachate Transfer Building (foundation)
I-FDN-038	Coating Adhesion Pull off Test	Leachate Transfer Building concrete coating
I-PIPE-017	Hydrostatic Testing of PVC Ancillary Pipe and Functional Valve Testing	Leachate Transfer Building ancillary equipment (PVC piping and valves)
I-PIPE-023	Leachate Transfer Pump Operational Test; CAT-PC-302-E	219E-LH-P-302

INSPECTION REPORT	SUMMARY	COMPONENT INSPECTED
Leachate 90-Day Accumulation Tank		
I-FDN-004	Forms and Reinforcing	Leachate Tank Foundation
I-FDN-005	Concrete Placement	Leachate Tank Foundation
I-PIPE-022	Pneumatic and Hydrostatic Tests	-- 219E1-3"-LH-030-HDPE (w/ 6" containment) -- 219E201-4"-LT-034-HDPE (w/ 8" containment)
I-TK-001	Leachate Tank Shell Assembly (both cells)	Cell 2 Leachate Tank
I-TK-002	Secondary Liner Installation and Leak Tests (both cells)	Cell 2 Leachate Tank
I-TK-003	Primary Liner Installation and Leak Tests (both cells)	Cell 2 Leachate Tank
I-TK-004	30-Day Tightness Tests (Cell 1 and Cell 2)	Cell 2 Leachate Tank
Truck Loading Station		
I-FDN-001	Subgrade In-Place Density Test	Truck Loading Station (foundation sub-grade)
I-FDN-002	Forms and Reinforcing	Truck Loading Station (sump base slabs)
I-FDN-003	Concrete Placement	Truck Loading Station (sump base slabs)
I-FDN-006	Forms and Reinforcing	Truck Loading Station (sump walls)
I-FDN-007	Concrete Placement	Truck Loading Station (sump walls)
I-FDN-012	Forms and Reinforcing	Truck Loading Station (foundation)
I-FDN-013	Concrete Placement	Truck Loading Station (foundation)
I-FDN-031	Forms and Reinforcing	Truck Loading Station (upright connection structure & perimeter curbs)
I-FDN-032	Concrete Placement	Truck Loading Station (upright connection structure & perimeter curbs)

INSPECTION REPORT	SUMMARY	COMPONENT INSPECTED
I-FDN-038	Coating Adhesion Pull off Test	Truck Loading Station foundation concrete coating
I-PIPE-016	Hydrostatic Testing (both cells)	Truck Loading Station (galvanized steel pipe and V-036, V037)
I-WELD-001	Weld Evaluation	Truck Loading Station (upright connection structure)

2.1 HDPE Underground Transfer Pipe

HDPE pipe is used for the underground leachate pipelines (see Figures 2 and 3). The out-of-cell transfer lines are double-walled with integrated centralizers. The LCRS, LDS, and SLDS are single-walled pipe. These are smaller diameter 8 ft. lengths of pipe connected by cam-lock quick-connections. For double containment, these are installed and operated inside larger diameter pipelines.

The installation process included certified quality assurance (CQA) receipt inspection of all HDPE pipe related items to ensure conformance with the Construction Specifications. TGS reviewed the material certification submittals and confirms that the HDPE resin, from which the pipe is made, meets the requirements of ASTM D3350 for PE3408 material with a cell classification of 34543C as called for in the Construction Specifications. On the construction site, certified HDPE welding technicians were used for fabrication (IDF submittal #172). A McElroy© (Model 28) self-contained electric hydraulic fusion machine was used for all HDPE welding. TGS concludes that the contractor had the equipment and capabilities to reliably weld double and single wall HDPE piping with acceptable quality.

Pipeline trenches were prepared according to the Construction Specification, including adequate bedding and compaction to prevent subsidence and pipeline physical damage. Pipelines were generally fabricated at the construction site and then placed into position and at the appropriate slope as specified in the design. Due to the size and length, the LCRS (containment pipes), LDS (containment pipes), and SLDS pipelines were fabricated at the trench crest and then placed into position utilizing crawler backhoes with nylon slings, a forklift, and manpower.

All HDPE pipelines (with one exception) were pressure (leakage) tested according to the Construction Specifications. The carrier pipelines were hydrostatic pressure tested, and containment pipelines were pneumatic pressure tested. All pipeline pressure testing was done as sections were installed and prior to covering, since the Leachate Tank System is not designed for post-installation pipeline pressure testing. The exception is identified by request for information (RFI) #125 and allows for visual inspection in lieu of pneumatic testing for 1 vertical weld and 1 horizontal weld on the -045 containment line at the tank tie-in. For Cell 2, both a vertical and a horizontal weld were required to be only visually inspected. All other welds in the -045 line were pressure (leakage) tested according to the Construction Specifications.

Liquid bubble examinations for leaks during the pneumatic pressure tests for some of the SLDS and LDS containment piping were not performed. This resulted from interpretation of the Construction Specifications that liquid bubble testing was only necessary if a drop in pressure below 5% was seen during the test interval. NCR-007 provides acceptable disposition for these cases.

All above ground portions of HDPE pipe (i.e., at the tank and the Truck Loading Station) are wrapped with heat trace and well insulated and protected from freezing and to limit pipe thermal differential expansion and the associated stresses. Additionally, the above ground sections of HDPE pipeline have substantial pipe supports. Although design calculations were not performed, it is the professional judgment of the IQRPE from evaluation of inspections that the pipe supports are sufficient to resist design earthquake forces.

Pipelines have been labeled.

Table 1 includes the inspection records for all HDPE transfer pipe.

Based on site inspections, and the review of available construction records and related vendor submittals, TGS concludes that HDPE pipelines are located according to the design, have been adequately installed, and have passed tightness testing to ensure their WAC-related functions, as evaluated in the design assessment report.

2.2 Crest Pad Building and Ancillary Equipment

Table 1 includes the inspection records for the Crest Pad Building and ancillary equipment.

2.2.1 Crest Pad Building (including foundation, sump, curbs, and walls)

Review of subgrade moisture content and density construction records indicate that the foundation subgrade was prepared in accordance with the Construction Specifications. The reinforced concrete sump, foundation slab, walls, and curbs were sequentially placed as required by the design. The design required water-stops are installed at construction joints. LinkSeal® mechanical sleeves are installed for the HDPE pipe penetrations through the concrete walls and foundation slab (including the 219E-3"-LH-024-HDPE pipeline to the Leachate Transfer Building). Concrete for the reinforced walls was placed using a mobile concrete pump truck. Concrete surfaces were coated and tested in accordance with the Construction Specifications. Construction Specification 9900 called for Ameron coating systems or approved substitutes. The project approved an alternative, Carboline coating systems, which was used for all concrete coatings identified by drawings. The exterior exposed concrete of the walls was coated as required by the dispositions of NCR-009. TGS reviewed the building installation certification submittal and concludes that the building was installed as designed and meets the Construction Specification requirements.

Components have been labeled with identification numbers. However, at this time, signage is not in place to meet WAC-173-303-640 (5) (d) since IDF will not be used for disposal of waste

in the immediate future. The management of non-leachate precipitation water does not require WAC signage.

Based on site inspections, and the review of available construction records and related vendor submittals, TGS concludes that the Crest Pad Building is adequately installed and passed tightness testing to meet its WAC-related functions, as evaluated in the design assessment report.

2.2.2 Crest Pad Building Ancillary Equipment

The flexible hoses, PVC pipelines and valves (including piping supports), level transducers (219E1-LH-LT-101 [LCRS] and -104 [LDS]), leachate filter, sump pump (219E1-LH-P-205) and associated leak detection elements and switches and power panels are installed correctly. Review of process instrumentation and control system (PICS) submittals indicates that the PICS is calibrated and will function correctly. The required SCATs were successfully completed.

The sump pump passed acceptance testing. The PVC pipelines and flexible hoses have been hydrostatic pressure tested in accordance with the Construction Specifications. The associated valves have been functionally tested. The pipe supports are installed appropriately. The Crest Pad Building instrument and control system has been calibrated and passed acceptance testing.

TGS has reviewed the design changes for the winch stands and concurs that the design is structurally adequate. The welding procedure specification (WPS), welding procedure qualification (WPQ), and performance qualification requirements (PQR) associated with the winch stand welds has been reviewed and found to be acceptable. The fabricated winch stands have been visually inspected and are adequate. It is noted that the winch gearing for the winch to remove 219E1-LH-P-203 requires 20 crank rotations for every one rotation of the winch drum. Hand cranking over twenty-seven 8-ft sections will take a long time and may not be ergonomically friendly. A variable speed electric drive for the pump removal was used in the insertion/extraction CATs). It is evident that the high-flow pump winch post will need to be absent during LDS pump insertion and extraction to provide the operator access to the winch handle.

The insertion/extraction CATs were witnessed for 219E1-LH-P-202 (LCRS low-flow) and 219E1-LH-P-203 (LCRS high-flow). CAT results were reviewed for the 219E1-LH-P-204 (LDS) insertion/extraction CAT. Physical force was required to insert the low-flow and LDS pumps due to the spool memory retention of the 1 ½ in. pipe 8 ft lengths (when assembled, the pipe run took on a sinusoidal shape which affected insertion). These 1 ½ in. pipe lengths were replaced using straight stock (not spooled) and hydrostatic pressure tested. A repeat insertion/extraction CAT was deemed unnecessary.

The LCRS pumps and level transducer (219E1-LH-LT-101) in 219E-18"-LHCP-025-HDPE, and LDS pump and level transducer (219E1-LH-LT-104) in 219E-12"-LHCP-027-HDPE are also considered to be ancillary equipment. The pumps and level transducers are adequately installed and have passed the required acceptance testing.

The SLDS reinforced concrete monolith was placed and utilizes a LinkSeal® mechanical sleeve as a wall penetration for the 219E-12"-LHCP-049-HDPE pipeline. The SLDS level transducer,

219E1-LH-LT-101, has been installed and connected to the associated instrumentation station. Acceptance testing shows the system is installed correctly and functions as designed.

Crest Pad Building control panel problems were experienced during the CAT and were most likely due to dust in the electrical panels, possibly from sand blasting the concrete in preparation for the surface coating. The ventilation damper was modified to add a filter and an associated housing unit inside the building to prevent wind-borne sand and dust from entering the building.

An auto-dialer was added to the control panel to support the Care and Custody Phase. Components have been labeled with identification numbers.

Based on site inspections, and the review of available construction records and related vendor submittals, TGS concludes that the Crest Pad Building ancillary equipment is adequately installed and passed tightness testing to meet its WAC-related functions, as evaluated in the design assessment report.

2.3 Combined Sump and Ancillary Equipment

Table 1 includes the inspection records for the Combined Sump and ancillary equipment (see Figure 4).

2.3.1 Combined Sump

TGS reviewed the material certification submittals and confirms that the HDPE resin, from which the inner and outer manholes were made from, meets the requirements of ASTM D3350 for PE3408 material with a cell classification of 34543C as called for in the Construction Specifications. TGS observed installation of the Combined Sump (including HDPE pipe connections, ring footing placement, outer french drain construction and lid placement) during numerous site visits. The Combined Sump (both inner and outer manholes) was hydrostatically tested successfully as required in the component CAT.

Components have been labeled with identification numbers. However, at this time, signage is not in place to meet WAC-173-303-640 (5) (d) since IDF will not be used for disposal of waste in the near future. The management of non-leachate precipitation water does not require WAC signage.

Based on site inspections, and the review of available construction records and related vendor submittals, TGS concludes that the Combined Sump is adequately installed and passed tightness testing to meet its WAC-related functions, as evaluated in the design assessment report.

2.3.2 Combined Sump Ancillary Equipment

The leachate handling pump (219E1-LH-P-207), level sensors, and valves (and their supports) have been installed and passed acceptance testing. The integrated check valve (CV-030) in P-207 was modified in the field to include a counter-weight kit. The counter-weight kit increases

the reliability for closing the check valve. Functional testing of all valves has been completed. TGS confirmed that two 6 ft long T-handled operating wrenches for 2 in. square nut operations for V-038 and V-039 were present. The Operations group will provide a small portable contractor-type pump to remove fluid from the outer portion of the Combined Sump, as required.

Components have been labeled with identification numbers.

Based on site inspections, and the review of available construction records and related vendor submittals, TGS concludes that the Combined Sump ancillary equipment passed tightness testing and is adequately installed to meet its WAC-related functions, as evaluated in the design assessment report.

2.4 Leachate 90-Day Accumulation Tank

Table 1 includes the inspection records for the Leachate 90-Day Accumulation Tank (see Figures 4 and 5).

Review of subgrade moisture content and density construction records indicate that the tank ringwall foundation subgrade was prepared in accordance with the Construction Specifications. Pipeline 219E201-2"-LTCP-036-HDPE (from the center of the tank to the Combined Sump) runs under the ringwall foundation. The concrete flange adapter is installed according to design. Construction records verify the slope from the center of the tank to the Combined Sump. It was pneumatic pressure tested. The entire reinforced concrete ringwall foundation was monolithically placed using a mobile concrete pump truck. After curing according to the Construction Specifications, the concrete forms were removed and the excavations inside and outside of the ringwall foundation were backfilled. The top grade inside the tank was compacted and sloped towards the center as required.

The tank shell (including the wind girder) was installed according to the design and Construction Specifications. Bolts for the bottom of the shell to the ringwall foundation were field located, drilled and installed with epoxy.

Geotextile material was installed against all inside surfaces of the tank shell to buffer the secondary liner from the bolted sheet metal panels. Four-inch non-compressive foam was installed around the perimeter as a cove to avoid liner pinching at the corner. The secondary liner is affixed to the tank center flange adapter per design. Also, the secondary liner was installed per design at the other tank penetrations (lines -030, -034, and -045).

Initial installation of the secondary liner was done from mid-November to January. The liner was affected by winter weather. Some tightness problems with the secondary liner were identified and documented in NCR-014. The original secondary liner was replaced with the original primary liner and a new primary liner was ordered for installation. Changes to field installation instructions directed by the disposition of NCR-014 included utilizing only lyster welds (no additional extrusion welding) and applying at least 2 coats of a liquid sealant (PM-100) on all field welds. Other non-destructive tests utilized for the secondary liner inspection included visual (both with a pick-tool and back-light), air jet, vacuum box, electronic leak location, and liquid dye. The "new" secondary liner underwent a fugitive liquid dye test

after leaks (which had been identified by the electronic leak location testing) were repaired. Dye was not observed outside of the tank over a period of 2 days. The secondary liner is deemed tight.

The primary liner was installed per design at the tank penetrations (lines -030, -034, and -045). 90° stainless steel elbows were installed as required for each of these penetrations. Non-destructive tests utilized for the primary liner inspection included visual (both with a pick-tool and back-light), air jet, vacuum box, and electronic leak location. The water with liquid dye between the primary and secondary liners was drained to the Combined Sump through the -036 pipeline with the hydrostatic pressure from a filled tank. The flow volume measurements and calculated rates were periodically were graphed over 1 week and the results showed that most of the fugitive dye had been removed.

The cover, stilling well and its instrumentation were installed and tested per design and Construction Specifications and passed. Review of PICS submittals indicates that it is calibrated correctly. Due to interstitial water remaining between the primary and secondary liners that resulted from the primary liner electronic leak test, the CAT leak rate acceptance criteria for the primary liner was modified to a value of no leaks to a value of 2 oz / hour. The tank passed the 30-day tightness CAT.

Components have been labeled with identification numbers. However, at this time, signage is not in place to meet WAC-173-303-640 (5) (d) since IDF will not be used for disposal of waste in the near future. The management of non-leachate precipitation water does not require WAC signage.

Based on site inspections, and the review of available construction records and related vendor submittals, TGS concludes that the Leachate 90-Day Accumulation Tank passed tightness testing and is adequately installed to meet its WAC-related functions, as evaluated in the design assessment report. The IQRPE recommends primary and secondary liner tightness tests at the end of the Care and Custody Phase to confirm tank integrity prior to the start of dangerous waste tank system operations.

2.5 Leachate Transfer Building and Ancillary Equipment

Table 1 includes the inspection records for the Leachate Transfer Building and ancillary equipment.

2.5.1 Leachate Transfer Building (including foundation and sump)

Review of subgrade moisture content and density construction records indicate that the foundation subgrade was prepared according to the Construction Specifications. The reinforced concrete sump, foundation slab, walls, and curbs were sequentially placed as required by the design. The design required water-stops are installed at construction joints. LinkSeal® mechanical sleeves are installed for all the HDPE pipe penetrations through the concrete foundation slab. Concrete surfaces were coated and tested in accordance with the Construction

Specification. Review of the building installation certification submittal shows that it was installed as designed.

Components have been labeled with identification numbers. However, at this time, signage is not in place to meet WAC-173-303-640 (5) (d) since IDF will not be used for disposal of waste in the near future. The management of non-leachate precipitation water does not require WAC signage.

Based on site inspections, and the review of available construction records and related vendor submittals, TGS concludes that the Leachate Transfer Building is adequately installed and passed tightness testing to meet its WAC-related functions, as evaluated in the design assessment report.

2.5.2 Leachate Transfer Building Ancillary Equipment

PVC pipelines, valves (including pipe supports), and the leachate transfer (219E1-LH-P-302) pump are installed correctly. Review of process instrumentation and control system (PICS) submittals indicates that the PICS is calibrated correctly.

The leachate transfer pump has passed acceptance testing. The PVC pipelines have been hydrostatic pressure tested in accordance with the Construction Specifications. The associated valves have been functionally tested. The associated instrument and control equipment has been calibrated and passed acceptance testing. According to design, 2 double-walled blanked off pipelines have been installed and pressure tested. The blank pipelines are for connection to a potential future leachate tank.

The SCAT for the leachate transfer pump (SCAT-P-302-E) found a possible backup flow situation at the Truck Loading Station in the design. The Leachate Tank System is designed so that in the event there is a 250 gpm (design flow capacity of P-302) overflow situation at the Truck Loading Station, the overflow will be contained in the Truck Loading Station foundation and directed to the 2 sumps. Overflow liquid then gravity flows from the Truck Loading Station sumps in lines 219E1-4"-LT-039 and 219E1-4"-LT-041 to the Combined Sump where P-207 (design flow capacity is 250 gpm) will pump the overflow back into the Leachate 90-Day Accumulation Tank. The SCATs determine P-302 (leachate transfer pump) flow capacity, with all valves in the transfer path full open, to be between 280 – 285 gpm. The SCATs determines P-207 (Combined Sump Pump) flow capacity to be 290 – 297 gpm. However, it was determined that the gravity flow from the Truck Loading Station to the Combined Sump is about 205 gpm maximum. Thus, backup of P-302 overflowing fluid onto the Truck Loading Station pad is likely to begin in about 10 minutes. A second test was performed resulting in no backup. P-302 is manually operated (a power kill switch is near by) and V-029 or V-037 can be used to manually throttle flow to the Truck Loading Station. The IQRPE believes that an operator is required to be present at the Truck Loading Station 100% of the time during transfers of fluid from the Leachate 90-Day Accumulation Tank to a truck. The reason is to prevent the possibility of overflowing the Truck Loading Station foundation and permitting fluid leakage to bare ground. Operation Instruction IDF-161-704, "Leachate Storage Tank and Transfer System Operation Instruction", requires the continuous manning of all transfers.

Components have been labeled with identification numbers. However, at this time, signage is not in place to meet WAC-173-303-640 (5) (d) since IDF will not be used for disposal of waste in the near future. The management of non-leachate precipitation water does not require WAC signage.

Based on site inspections, and the review of available construction records and related vendor submittals, TGS concludes that the Leachate Transfer Building ancillary equipment is adequately installed and passed tightness testing to meet its WAC-related functions, as evaluated in the design assessment report.

2.6 Truck Loading Station and Ancillary Equipment

Table 1 includes the inspection records for the Truck Loading Station and ancillary equipment.

2.6.1 Truck Loading Station Foundation (including sumps)

Review of subgrade moisture content and density construction records indicate that the subgrade was prepared in accordance with the Construction Specifications. The reinforced concrete sumps, foundation slab, and curbs were sequentially placed as required by the design. The design required water-stops are installed at construction joints. Appropriate water-stops were installed at all required construction joints. LinkSeal® mechanical sleeves were installed at each HDPE pipe penetration at the sumps. The surface contour with appropriate slopes was finished to drain liquid to the sumps. Concrete surfaces were coated and tested in accordance with the Construction Specification including incorporation of the grit blast material between second and primary coats to provide a non-slip surface. The sumps passed leak tightness testing.

Components have been labeled with identification numbers. However, at this time, signage is not in place to meet WAC-173-303-640 (5) (d) because the IDF will not be used for disposal of waste for some time. Management of non-leachate precipitation water does not require WAC signage.

Based on site inspections, and the review of available construction records and related vendor submittals, TGS concludes that the Truck Loading Station Foundation (including sumps) is adequately installed and passed tightness testing to meet its WAC-related functions, as evaluated in the design assessment report.

2.6.2 Truck Loading Station Ancillary Equipment

Truck Loading Station ancillary equipment includes the upright structural steel truck loading connection, valves (219E1-LH-V-036 and -037), galvanized steel pipe, and sump covers. Inspection of this equipment verified that it is installed as required by the design.

The WPS, WPQ, and PQR associated with the upright structural steel loading connection welds were reviewed and found to be acceptable. The upright loading connection welds were verified and construction records for the coating document acceptable application. The upright loading

connection was installed in a reinforced concrete base. The galvanized steel pipe is adequately attached to the upright truck loading connection with hangers and has passed the required hydrostatic pressure test. Also, the valves were functional tested. Solid sump covers are in place to prevent precipitation in-flow to the system. Grated sump covers were verified to be on site for use during truck loading. TGS has confirmed with CHG that IDF Operations will provide the truck appropriate connection for the transfer of liquid from the 4 in. quick-connect coupling to the transfer tanker truck.

Above-ground HDPE piping (219E1-4"-LT-037) is insulated and heat tracing is installed.

Components have been labeled with identification numbers. However, at this time, signage is not in place to meet WAC-173-303-640 (5) (d) since IDF will not be used for disposal of waste in the near future. The management of non-leachate precipitation water does not require WAC signage.

Based on site inspections, and the review of available construction records and related vendor submittals, TGS concludes that the Truck Loading Station ancillary equipment passed tightness testing and is adequately installed to meet its WAC-related functions, as evaluated in the design assessment report.

3.0 NON-CONFORMING ITEMS AND INSTALLATION REPAIRS

This section identifies installation activities that deviated from the Construction Specifications. Deviations (non-conformances) resulting in repairs are identified in Table 2 as required by WAC 173-303-640 (3) (h). Table 2 also provides the list of items, pertinent to IQRPE scope, identified by the construction contractor during installation which did not initially conform to Construction Specifications but did not require any repairs. TGS has reviewed each item and concurs that all dispositions are adequate to support tank system certification.

Table 2. List of Cell 2 Leachate Tank System Related Dispositioned Non-Conforming Report Items

NCR	Component	Description of Non-Conformance	Disposition
-002	219E-12"-LHCP-049-HDPE (SLDS riser)	Interior weld beads were not removed according to the Construction Specifications	Disposition: Use as-is. Technical Justification: Insertion testing was completed without complications.
-004	Cell 2 Truck Loading Station Sumps	Independent laboratory completed 28 day break testing on concrete cylinders for subject item and found that they broke at 4,210 psi. The Construction Specifications required 5,000 psi.	Disposition: Use as-is. Technical Justification: In-place field coring samples were taken from sump concrete, tested and found to be to have acceptable strength.

NCR	Component	Description of Non-Conformance	Disposition
-006	Cell 2 Crest Pad Building stem wall concrete pour from base slab.	Reinforcing steel mat is 5 in. from the outside of form which puts the location of the water-stop in conflict with the drawings. There is inadequate clearance between vertical reinforcement and inside form to place water-stop at north and east wall.	Disposition: Use as-is. Technical Justification: The water-stop was moved to the outside of the reinforcing steel and installed in accordance with the manufacturer's recommendations and project requirements.
-007	219E-12"-LHCP-027 219E-12"-LHCP-026 219E-12"-LH-047 219E-18"-LHCP-025 219E-3"-LH-048	Pipes were not liquid bubble tested during pneumatic testing as called out by the Construction Specifications.	Disposition: Use as-is. Technical Justification: Pneumatic pressure tests were performed without any noticeable pressure drops. Pipes are underlain by HDPE liners.
-009	Cell 2 Crest Pad Building walls	Concrete was tested and found to contain less than 4% air content. The Construction Specifications requires 4% – 6%.	Disposition: Repair Repair exterior exposed concrete walls by application of an acrylic copolymer sealant coating. Primary concern is the durability of concrete exposed to freezing conditions. Only outside walls will be exposed. Air content field results are within the American Concrete Institute recommended air content range.
-014	Cell 2 Leachate Tank secondary liner	Secondary liner was accepted following all required testing and repairs. During filling for electronic test of the primary liner, it was determined that the secondary liner was not water tight.	Disposition: Rework/Repair Original secondary liner was removed and replaced with the original primary line per a revised installation and testing plan as approved by CHG. A new primary liner was ordered.
-017	Cell 2 Concrete Paint Coating System	The pull test apparatus utilized for initial Construction Specification testing did not meet the specified accuracy requirement.	Disposition: Rework/Repair Construction Specification testing was repeated utilizing calibrated gauges. Testing resulted in either the coating meeting the acceptance criteria or concrete failing above the acceptance criteria. Coating repairs were made on all areas where concrete failed.

NCR	Component	Description of Non-Conformance	Disposition
-018	Cell 2 Tank Foundation	The Construction Specification required concrete slump to be between 4 ½ in. and 8 in. for class 40 and Class 50 concrete. Pour No. 50.10 was one of four truckloads for the tank foundation, and its slump was measured as 4 in.	Disposition: Use as-is Typically, slump is not utilized as an acceptance criterion when water cement is specified and met. Results of compressive strength testing indicate that the concrete used in these pours was acceptable.

Table 3 provides a list of items that were reworked or repaired during installation. TGS has reviewed each item and concurs that dispositions are adequate to support tank system certification.

Table 3. Items Identified Which Were Repaired During Installation

System Identifier	Item	Description	Disposition
Combined Sump	Manufacture weld on 219E1-4"-LT-041-HDPE pipe to inner manhole	Weld leaked during leak test	Vendor repaired the weld. Follow-on leak test was successful. TGS concurs with this repair.
	Pump 207 check valve	219E1-LH-CV-030 did not close properly during component construction acceptance testing.	A factory installed counter-balance option was added to the same model check valve. The valve was confirmed to work (both to open and shut closed) during system construction acceptance testing. TGS concurs with this repair.
219E201, Leachate Storage Tank	Powder-coated, galvanized steel, corrugated plates	Coating was scratched or missing at numerous places on inside and outside panels and at field drilled wind girder vertical attachment holes	Identified areas were prepared and repaired with white Rust-Oleum® paint using cold weather painting procedures. TGS concurs with this repair.

System Identifier	Item	Description	Disposition
	Powder-coated, 3"x5"x1/4" base angles	Coating on inside hole was damaged during field placement of anchor bolts	All coatings were repaired with white Rust-Oleum® paint using cold weather painting procedures. TGS concurs with this repair.
	Secondary liner	The liner/219E1-3"-LH-030-HDPE interface failed tightness testing during hydrostatic pressure testing of line -030. The boot connection ballooned and required repair and retesting.	It was determined the XR-5 material had not been trimmed enough where it interfaces with the gasket and the interior scrim allowed for a leak path to a weak point outside of the gasket. The boot was replaced with an appropriately trimmed piece, and multiple coats of PM-100 were applied to the edge to prevent future wicking. TGS concurs with this repair.
Truck Loading Station	Upright truck loading connection	Coating in several places was damaged during field placement	All coatings were repaired. TGS concurs with this repair.
	Construction joint between main slab and concrete placement for the upright truck loading connection.	Carboline coating did not adhere to the construction joint fiber board. Coating peeling was visible.	Approximately ½ in. of fiber board was routed out and crack was filled with flexible caulking material. TGS concurs with this repair.

4.0 EXCLUSIONS

1. Leachate Tank System signage is not in place to meet WAC-173-303-640 (5)(d). Signage is required prior to introduction of dangerous waste.

5.0 CERTIFICATION

The installation for the Leachate Tank System as identified in Section 1.2 of this report has been assessed. System design and installation, based on the data and premises provided in this report, are in compliance with WAC 173-303-640, as applicable, and has sufficient structural integrity and is acceptable for the storing of dangerous waste with the exclusion listed in Section 4.0. The certification below is in accordance with the requirements of WAC 173-303-640 (3) (h) and 173-303-810 (13) (a).

Report Lead IQRPE:

I certify under penalty of the law that this document and all attachments were prepared under my direction or supervision in accordance with a system designed to assure that qualified personnel properly gather and evaluate the information submitted. Based on my inquiry of the person or persons who manage the system, or those persons directly responsible for gathering the information, the information submitted is, to the best of my knowledge and belief, true, accurate, and complete. I am aware that there are significant penalties for submitting false information, including the possibility of fine or imprisonment for knowing violations.

Approved:

Robert L. Goodman, Jr., PE

Robert L. Goodman, Jr., PE
Chief Engineer, TGS

24 Oct 06.

Date

6.0 REFERENCES

DelHur 2006a, letter (DHI-23580-IC-06-086) dated May 2 from D. Sterley (DelHur Industries, Inc.) to G. J. Kelmel (CH2M HILL Hanford Group), Letter of Transmittal, Executed Copies of IDF C-CATS and S-CATS for Cells 1 and 2 (Minus Tank Tightness Test of Cell 1 and 2 Tanks), DelHur Industries, Inc., Richland, Washington.

DelHur 2006b, Submittal Numbers 151 and 210 for Specification Section 13205, IDF Tanks Installation Inspection Report, DelHur Industries, Inc., Richland, Washington.

Integrated Disposal Facility (IDF) Cell 1 and 2 Tanks – Acceptance Criteria and Re-Certification Recommendations, technical memorandum dated August 28, 2006, from Jay Dehner (CH2M HILL) to CH2M HILL Hanford Group, Richland, Washington.

Integrated Disposal Facility (IDF) Detailed Design: Construction Inspection Plan, RPP-18490, Rev. 0, 2004, CH2M HILL Hanford Company, Richland, Washington.

Integrated Disposal Facility (IDF) Detailed Design: Technical Specifications (Final Design Submittal), RPP-18489, Rev. 0, 2004, CH2M HILL Hanford Company, Richland, Washington.

Integrated Disposal Facility (IDF) Phase I Critical Systems Design – Design Report, RPP-18486, Rev. 0, 2003, CH2M HILL Hanford Company, Richland, Washington.

IQRPE Design Assessment Report for the Integrated Disposal Facility (IDF) Leachate Tank System (Cell 2), DR-102, Rev. 0, RPP-RPT-27414, Rev. 0, TechnoGeneral Services Company, Pasco, Washington.

IQRPE Inspection and Final Certification Plan for the Integrated Disposal Facility (IDF) Leachate Tank System (Cells 1 and 2), IP-101, Rev. 0, RPP-PLAN-26730, Rev. 0, TechnoGeneral Services Company, Pasco, Washington.

DOE/RL 2003, Hanford Facility Danger Waste Permit Application, Integrated Disposal Facility, DOE/RL-2003-12, Rev. 1, U.S. Department of Energy, Richland Laboratory, Richland, Washington.

Publication 94-114, "Guidance for Assessing and Certifying Tank Systems that Store and Treat Dangerous Waste", June 1994, Washington State Department of Ecology

Publication 95-420, "Guidance for Assessing Dangerous Waste Secondary Containment Systems", September 1995, Washington State Department of Ecology

Washington Administrative Codes (WAC)

WAC 173-303, "Dangerous Waste Regulations"

WAC 173-303-640, "Tank Systems"

WAC 173-303-640(3), "Design and Installation of New Tank Systems or Components"

WAC 173-303-640(4), "Containment and Detection of Releases"

WAC 173-303-640-810(13)(a), "Certification"

WAC 196-23, "Licensing, Department of Engineers and Land Surveyors, Board of Registration for Professional, Stamping and Seals"

WAC 196-23.020, "Seal/Stamp Usage"

ENGINEERING DATA TRANSMITTAL

1. EDT 822155
1A. Page 1 of 2 4/17/06

2. To: (Receiving Organization) Distribution	3. From: (Originating Organization) ATS Engineering	4. Related EDT No.: EDT-821949
		5. Structure Location: N/A
6. Proj./Prog./Dept./Div.: Integrated Diposal Facility	7. Responsible Engineer/Design Agent: D.C. Comstock - Responsible Engineer	8. System Designator: N/A
		9. Building No.: N/A
10. Originator Remarks: Report prepared and certified by Envirotech Engineering & Consulting. The CQA report certifies the construction of the IDF Cell 1 & Cell 2 liner systems in accordance with the project drawings, specifications and CQA Plan. This EDT approves and releases this report in support of the IDF permit.		11. Equipment ID No. (EIN): N/A
		12. Permit/Permit Application No.: Integrated Disposal Facility
13. USQ No.: N/A Date: ☐ N/A	13(A). TBDs or HOLDs In the Data Transmitted? ☐ Yes ☒ No 13(B). Project Number or Identifier: Integrated Disposal Facility	14. Purchase Order No.: N/A
		15. Required Response Date: ASAP

16. DATA TRANSMITTED

(A) Item No.	(B) Document/Drawing No.	(C) Sheet No.	(D) Rev. No.	(E) Title or Description of Data Transmitted	(F) Hard-copy or PDF	(G) Approval Designator	(H) Reason for Transmittal	(I) Originator Disposition	(J) Receiver Disposition
1	RPP-RPT-29276	N/A	0	CQA Final Report for IDF Cell Nos. 1 and 2	H	E	1	1	1

17. IMPACTED DOCUMENTS – NON ENGINEERING		18. IMPACTED DOCUMENTS – ENGINEERING	
Type of Document	Document Number	Type of Document	Document Number
N/A	N/A	N/A	N/A

19. KEY

Approval Designator (G)	Reason for Transmittal (H)	Disposition (I)
See TFC-ENG-DESIGN-C-25	1. Approval 2. Review 3. Distribution	1. Approved 2. Approved w/comment 3. Reviewed no comment 4. Reviewed w/comment 5. Disapproved

20. SIGNATURE/DISTRIBUTION

(H) Reason	(I) Disp.	(J) Name	(K) Signature	(L) Date	(M) MSIN	(H) Reason	(I) Disp.	(J) Name	(K) Signature	(L) Date	(M) MSIN
1	1	Originator K.A. Colosi	K.A. Colosi	4/5/06	S7-67	3	N/A	P.E. LaMont	N/A	N/A	H6-60
1	1	Resp. Engr. D.C. Comstock	DC	4/5/06	S7-67	3	N/A	G.M. Ramin	N/A	N/A	H6-60
1		Resp. Mgr. S.L. Brey	Steve Brey	4/10/06	T6-04						
1	1	QA T.L. Bennington	[illegible]	4/5/06	R3-25						
N/A	N/A	IH&S Engr. N/A									
1	1	Env. Engr. F.R. Miera	Felix R. Miera	4/5/06	H6-03						

21. DOE APPROVAL (if required)
Ctrl. No. N/A

22. Release Date/Station/ID
APR 24 2006 STA 4

18

BD-7400-172.2 (02/06)

ENVIROTECH
ENGINEERING & CONSULTING, INC.

2500 North Eleventh Street | Enid, OK 73701 | (580) 234-8780 | Fax (580) 237-4302 | www.envirotechconsulting.com

April 11, 2006

Mr. Gregory L. Parsons
Project Manager
CH2M Hill - Hanford Group
PO Box 1500
Mail Stop S7-67
Richland, WA 99352

Re: ***Certification Associated with Construction Quality Assurance (CQA) Oversight During Construction of Cell Nos. 1 and 2 at the Integrated Disposal Facility (IDF); Subcontract No. 26693; RPP-RPT-29276, Rev. 0***

Dear Mr. Parsons:

ENVIROTECH ENGINEERING & CONSULTING, INC., served as the Construction Quality Assurance (CQA) officer during construction of the above-referenced project in Hanford, Washington. ENVIROTECH hereby certifies that Cell Nos. 1 and 2 at the Integrated Disposal Facility (IDF) were constructed in accordance with Washington Administrative Codes (WAC) 173-303-650 and 173-303-665, as outlined in WAC 173-303-335, and the IDF CQA Plan, RPP-18490, Rev. 0A. ENVIROTECH certifies that the construction of all components for the foundations, dikes, low-permeability soil liners, geomembranes (flexible membrane liners), and in-cell leachate collection and detection systems meets and/or exceeds all design criteria and specifications in the detailed design specifications RPP-18489, Rev. 0D and the design drawings RPP-19941, Rev. 0A. In addition, ENVIROTECH certifies that materials utilized during the referenced construction met design and other specifications outlined in WAC 173-303-650, 173-303-655, and IDF CQA Plan, RPP-18490, Rev. 0A.

Thank you.

Best regards,

ENVIROTECH ENGINEERING & CONSULTING, INC.

Rob L. Stallings, P.E.
Certification Engineer

ROB L. STALLINGS
STATE OF WASHINGTON
40137
REGISTERED
PROFESSIONAL ENGINEER
EXPIRES 6/26/06

4/10/06

/adw

RPP-RPT-29276, REV. 0

Integrated Disposal Facility (IDF), CQA Final Certification Report for IDF Cell Nos. 1 and 2

Prepared BY:
Rob Stalling
Envirotech Engineering & Consulting, Inc.

Prepared For:
D.C. Comstock
CH2M HILL Hanford Group, Inc.
Richland, WA 99352
U.S. Department of Energy Contract DE-AC27-99RL14047

EDT/ECN:	EDT 822155	**UC:**	2000
Cost Center:	7G330	**Charge Code:**	
B&R Code:		**Total Pages**	77

Key Words: Integrated Disposal Facility, IDF, CQA, Certification Report

Abstract: This document contains the final construction quality assurance certification report of the Integrated Disposal Facility (IDF). This document provides the CQA Officer's certification and final report showing that the IDF construction was performed in accordance to the project specifications, drawings, CQA plan and WAC 173-303-665 requirements.

TRADEMARK DISCLAIMER. Reference herein to any specific commercial product, process, or service by trade name, trademark, manufacturer, or otherwise, does not necessarily constitute or imply its endorsement, recommendation, or favoring by the Unites States Government or any agency thereof or its contractors or subcontractors.

Printed in the Unites States of America. To obtain copies of this document, contact: Document Control Services, P.O. Box 950, Mailstop H6-08, Richland WA 99352, Phone (509) 372-2420; Fax (509) 376-4989.

APR 24 2006
DATE:
STA:
HANFORD RELEASE
ID 18

L.E. Fox 4-24-2006
Release Approval Date

Release Stamp

Approved For Public Release

♦ *FINAL REPORT* ♦

CONSTRUCTION QUALITY ASSURANCE (CQA)
INTEGRATED DISPOSAL FACILITY (IDF)
CELL NOS. 1 AND 2

SUBCONTRACT NO. 26693

RPP-RPT-29276, REV. 0

Submitted By

ENVIROTECH
ENGINEERING & CONSULTING, INC.

Submitted To

CH2MHILL

APRIL 2006

05084-00-25

♦ *FINAL REPORT* ♦

CONSTRUCTION QUALITY ASSURANCE (CQA)
INTEGRATED DISPOSAL FACILITY (IDF)
CELL NOS. 1 AND 2

SUBCONTRACT NO. 26693

RPP-RPT-29276, REV. 0

Submitted By

ENVIROTECH
ENGINEERING & CONSULTING, INC.

Submitted To

CH2MHILL

APRIL 2006

Joe Voss
QA Engineer

Rob L. Stallings, P.E.
Certification Engineer

ROB L. STALLINGS
STATE OF WASHINGTON
40137
REGISTERED PROFESSIONAL ENGINEER

4/10/06

EXPIRES 6/24/06

05084-00-25

TABLE OF CONTENTS

1. **INTRODUCTION** ..... 1.
- 1.1 Project Specifications ..... 1.
- 1.2 Construction Overview ..... 1.
- 1.3 Scope of Work ..... 2.
- 1.4 Outside of Scope ..... 2.
- 1.5 Project Overview ..... 3.

2. **FOUNDATION AND SOILS** ..... 5.
- 2.1 Introduction ..... 5.
  - 2.1.1 Scope of Services ..... 5.
- 2.2 Excavation ..... 5.
- 2.3 Foundation Preparation ..... 6.
- 2.4 Fill and Backfill ..... 8.
- 2.5 Excavation Summary ..... 8.

3. **LINER SYSTEM** ..... 9.
- 3.1 Scope of Services ..... 10.
- 3.2 Material Certifications ..... 11.
- 3.3 Manufacturing Plant Visit ..... 12.
- 3.4 Material Conformance Testing ..... 12.
  - 3.4.1 Bentonite Testing ..... 12.
  - 3.4.2 HDPE Geomembrane ..... 13.
  - 3.4.3 Geotextile ..... 14.
  - 3.4.4 Composite Drainage Net (CDN) ..... 15.
  - 3.4.5 Geosynthetic Clay Liner (GCL) ..... 16.
- 3.5 Secondary Leak Detection System (SLDS) ..... 16.
  - 3.5.1 SLDS Construction Activities ..... 16.
  - 3.5.2 SLDS CQA Activities ..... 17.
    - 3.5.2.1 SLDS HDPE Geomembrane Liner Deployment ..... 17.
    - 3.5.2.2 SLDS Composite Drainage Net Installation ..... 19.
    - 3.5.2.3 SLDS Drainage Gravel ..... 20.
    - 3.5.2.4 SLDS HDPE Piping ..... 21.
- 3.6 Low-Permeability Soil Liner (Admix) ..... 21.
  - 3.6.1 Construction Activities ..... 21.
  - 3.6.2 CQA Activities ..... 23.
    - 3.6.2.1 Construction Monitoring ..... 23.
- 3.7 Secondary HDPE Geomembrane Liner ..... 26.
  - 3.7.1 Construction Activities ..... 26.
  - 3.7.2 CQA Activities ..... 29.

3.7.2.1 Geosynthetic Clay Liner (GCL) ....29.
3.7.2.2 HDPE Geomembrane Liner Deployment ....30.
3.7.2.3 HDPE Geomembrane Liner Seaming ....34.
3.7.2.4 Non-Destructive Seam Continuity Testing ....35.
3.7.2.5 Secondary HDPE Geomembrane Liner Repairs ....35.
3.7.2.6 Destructive Testing ....35.
3.7.2.7 CQC Testing ....37.
3.8 Leachate Detection System ....37.
3.8.1 Leachate Detection System (LDS) Sideslope/FloorConstruction Activities ....37.
3.8.2 Leachate Detection System (LDS) Sump/Sideslope Riser Construction ....38.
3.8.3 LDS CQA Activities ....39.
3.8.3.1 LDS Geotextile/Composite Drainage Net (CDN) Installation ....39.
3.8.3.2 LDS Drainage Gravel ....40.
3.8.3.3 LDS Cushion Geotextile ....41.
3.8.3.4 LDS HDPE Pipe ....41.
3.9 Geosynthetic Clay Liner and Primary HDPE Geomembrane Liner System ....42.
3.9.1 Primary Liner Construction Activities ....42.
3.9.2 Primary Liner CQA Activities ....44.
3.9.2.1 Primary Geosynthetic Clay Liner (GCL) ....44.
3.9.2.2 Primary HDPE Geomembrane Liner Deployment ....44.
3.9.2.3 Primary HDPE Geomembrane Liner Seaming ....48.
3.9.2.4 Primary Non-Destructive Seam Continuity Testing ....48.
3.9.2.5 Primary HDPE Geomembrane Liner Repairs ....48.
3.9.2.6 Primary Destructive Testing ....48.
3.9.2.7 CQC Testing ....49.
3.10 Leachate Collection and Removal System (LCRS) ....49.
3.10.1 Leachate Collection/Removal System (LCRS) Construction Activities ....49.
3.10.2 Leachate Collection/Removal System (LCRS) Sump Construction ....50.
3.10.3 LCRS Drainage Gravel Placement ....50.
3.10.4 LCRS CQA Activities ....51.
3.10.4.1 LCRS Cushion Geotextile ....51.
3.10.4.2 LCRS Composite Drainage Net (CDN) ....52.
3.10.4.3 LCRS Drainage Gravel ....52.
3.10.4.4 LCRS HDPE Pipe ....52.
3.11 Liner System Summary ....52.

4. PROTECTIVE OPERATIONS LAYER ....52.
4.1 Introduction ....52.
4.2 Scope of Work ....53.
4.3 Construction Activities ....53.
4.3.1 Inside Cell Limits ....53.

4.3.2 Outside Cell Limits ....54.
4.3.2.1 Shine Berm ....54.
4.3.2.2 South Termination ....54.
4.4 CQA Activities ....55.
4.4.1 Separation Geotextile Deployment ....55.
4.4.2 Operations Layer - Inside Cell Limits ....56.
4.4.3 Operations Layer - Outside Cell Limits ....57.
4.4.4 Operations Layer - Shine Berm ....57.

5. DOCUMENTATION ....58.
5.1 Daily Reports ....58.
5.2 Inspection Data Sheets ....58.
5.3 Non-Conformance Reporting ....58.
5.4 Design Changes and Clarifications ....58.
5.5 Progress Reports ....58.
5.6 Photograph Log ....59.
5.7 HDPE Geomembrane Tracking Log ....59.
5.8 Geosynthetic Tracking Log ....59.

6. CONCLUSIONS ....59.

ATTACHMENT EEC-1 RESUMES ....60.
Robert L. Stallings, P.E. ....61.
Joe Voss, EIT ....66.
John Stovall ....70.

LIST OF FIGURES:

FIGURE 1. CELL NOS. 1 AND 2 TERTIARY GEOMEMBRANE ....18.
FIGURE 2. ADMIX ACCEPTABLE ZONE ....24.
FIGURE 3. CELL NOS. 1 AND 2 SECONDARY GEOMEMBRANE ....31.
FIGURE 4. CELL NOS. 1 AND 2 PRIMARY GEOMEMBRANE ....45.

LIST OF TABLES:

TABLE 1. LINER SYSTEM LAYERS ....4.
TABLE 2. MATERIAL CERTIFICATIONS AND RECEIPT INSPECTION ....11.
TABLE 3. TYPE/FREQUENCY OF SOIL LINER MATERIAL (ADMIX) AND BASE SOIL TESTING ....27.
TABLE 4. DESTRUCTIVE TEST CRITERIA ....37.
TABLE 5. TYPE AND FREQUENCY OF OPERATIONS LAYER MATERIAL TESTING ....57.

1. INTRODUCTION

ENVIROTECH ENGINEERING & CONSULTING, INC. (ENVIROTECH) was retained by CH2M Hill Hanford Group (CHG) to provide Construction Quality Assurance (CQA) observation, inspection, sampling, and testing during construction of the landfill liner system for Cell Nos. 1 and 2 at the Integrated Disposal Facility (IDF). The IDF is located in the 200 East area of the Hanford Nuclear Reservation, approximately 25-mi. north of Richland, Washington. The U.S. Department of Energy (DOE) administers the Hanford Nuclear Reservation and the IDF. CHG is under contract with DOE to construct the IDF to support both the Bulk Vitrification Plant and the Waste Treatment Plant. ENVIROTECH'S work was conducted under CHG Subcontract Number 26693, and Del-Hur, Inc., was retained by CHG as the general contractor for IDF construction. This report supports the CQA Officer's certification required by WAC 173-303-335(4) that the approved CQA Plan has been completed successfully and that the IDF construction has been accomplished in accordance with the permitted design drawings and specifications.

1.1 **Project Specifications.** The work was conducted in accordance with the following documents:

- *Integrated Disposal Facility, Construction Specifications, RPP-18489, Rev 0D,* prepared for CH2M Hill Hanford Group by CH2M Hill, Inc., and dated August 15, 2005.
- *IDF Design Drawing Set, RPP-19941, Rev0A,* prepared for CH2M Hill Hanford Group by CH2M Hill, Inc. and approved on July 7, 2004.
- *Integrated Disposal Facility, Detailed Design: Construction Inspection Plan, RPP-18490, Rev. 0,* prepared for the U.S. Department of Energy by CH2M Hill, Inc., and issued for construction on July 1, 2004.
  - *Integrated Disposal Facility, Detailed Design: Cell 1 Construction Inspection Plan, RPP-18490, Rev. 0, Attachment 1.*
  - *Integrated Disposal Facility, Detailed Design: Cell 2 Construction Inspection Plan, RPP-18490, Rev. 0, Attachment 2.*

1.2 **Construction Overview.** IDF construction was divided into *Schedule A* and *Schedule B*. Because the IDF was a new facility, no utilities or roads existed on-site. The *Schedule A* contract encompassed necessary road construction and utility system installation to support the IDF and which was not included in ENVIROTECH's CQA Scope of Work. *Schedule B* activities included construction of the landfill and support facilities.

1.3 **Scope of Work.** The Scope of Work limited the CQA to activities associated with construction of the landfill liner system for Cell Nos. 1 and 2. The CQA Scope of Work included the following responsibilities:

- ❒ Foundation excavation, sampling, and testing to include excavation monitoring and foundation testing.
- ❒ Low-permeability admix liner test pad, completed and submitted as document RPP-RPT-26466 Construction QA (CQA) Soil Bentonite Liner Test Pad Report Integrated Disposal Facility (IDF) Cells 1 & 2.
- ❒ Low-permeability admix soil liner monitoring/testing to include base soil, bentonite, and admix soil.
- ❒ Leachate Collection and Removal Systems (LCRS) and Leak Detection Systems (LDS) installation inspection.
- ❒ Geosynthetic clay liner (GCL) testing and installation inspection.
- ❒ HDPE primary, secondary, and tertiary geomembrane testing and installation inspection.
- ❒ Geotextile testing and installation inspection.
- ❒ Composite drainage net (CDN) testing and installation inspection.
- ❒ HDPE pipe and fittings receipt inspection.
- ❒ Soils monitoring/testing to include earthwork, roads, and operations soil.
- ❒ CQA documentation and certification to include final report and "As-Built" surveys.

1.4 **Outside of Scope.** Although the CQA Scope of Work included landfill liner construction, it did not extend to construction of the support and operation facilities including:

- ❒ Leachate handling facilities outside the landfill (presented in a separate IQRPE installation report).
- ❒ Mechanical and instrumentation components of the SLDS, LDS, LCRS sumps (presented in a separate IQRPE installation report).

1.5 **Project Overview.** Del-Hur Industries, Inc. (DHI) of Port Angeles, Washington, was awarded the project on July 1, 2004, and construction commenced on August 12, 2004. After mobilization, DHI initiated clearing and grubbing operations in the work areas. Temporary Authorization (TA) #1 was approved on August 8, 2004, and excavation activities were executed on August 24, 2004, utilizing an excavator and a fleet of Pay Hauler trucks. CH2M Hill, Inc. (CHI) was retained by CH2M Hill Hanford Group for Phase I construction and excavation activities. CHI retained ENVIROTECH ENGINEERING & CONSULTING, INC. (ENVIROTECH) to provide soil analysis and testing services. CHI personnel segregated the excavated material, based on the soil characteristics, to one (1) of three (3) stockpile areas as follows: **(1)** a topsoil stockpile, **(2)** a base soil stockpile, or **(3)** operation soil stockpile. In addition, CHI personnel determined which materials should be accepted for use as base soil and ENVIROTECH tested and confirmed all soil entering the stockpile. Excavation activities were completed on November 23, 2004.

Temporary Authorization (TA) #2 was approved on April 5, 2005, and ENVIROTECH ENGINEERING & CONSULTING, INC. (ENVIROTECH) was retained by CH2M Hill Hanford Group to lead the CQA team to oversee the soils, geosynthetic installation and testing activities, and serve as the Certifying Engineer for liner construction. The CQA construction team included Robert Stallings (Certifying Engineer), Joseph Voss (CQA Monitor), and John Stovall (CQA Geosynthetics Field Inspector). Resumes summarizing the qualifications for the referenced individuals are included as *Attachment EEC-1* at the end of this report.

DHI constructed the horizontal and vertical admix test pads in the NE/corner of Cell No. 2 on April 22, 2005. Following completion of the admix test pad, CQA conducted in-place soil testing and a Boutwell permeability test. The testing results were submitted as RPP-RPT-26466 CONSTRUCTION QA (CQA) SOIL BENTONITE LINER TEST PAD REPORT INTEGRATED DISPOSAL FACILITY (IDF) CELLS 1 & 2 (Project Records Index-PRI 7.8.1). During the CQA Boutwell testing, DHI completed grading and excavating the Cell 2 footprint in preparation for admix placement.

Following completion of the test pad and approval of the CQA Test Pad Report, DHI began production and placement of admix soil in Cell No. 2. On July 6, 2005, after CHG received Temporary Approval (TA) #3, DHI began placement of admix soil into Cell No. 1.

Prior to placing admix soil in the sumps; DHI installed a secondary leak detection system (SLDS) in both sumps for leak detection. Morrison Construction Services, Inc. of Richland, Washington, was retained by DHI to install the HDPE piping component of the liner system. Great Basin Environmental (GBE) was retained by DHI to install the geosynthetic components of the liner system. GBE installed a 60-mil. geomembrane liner on top of the compacted foundation in the sumps, followed by composite drainage net (CDN). A 12-in.-dia. HDPE pipe was installed from the top of the trench, down the side slope, and onto the bottom of

the SLDS sump. Drainage gravel was placed around the SLDS pipe and operations material was placed over the CDN as per the construction specifications.

After completing the SLDS installation, DHI continued admix placement activities. The produced admix was loaded into Pay Haulers and transported into the trench where it was spread and compacted in 6-in. lifts. A 3-ft. soil liner was placed on both the bottom and sideslopes of both cells and CQA conducted the required testing during soil (admix) liner placement.

Following acceptance of the admix liner foundation, geosynthetic liner placement was commenced throughout Cell Nos. 1 and 2 by GBE. The sequence of the geosynthetic component placement varied, as required, to meet installation constraints and is summarized in *Table 1*.

TABLE 1.
LINER SYSTEM LAYERS

FLOOR	SIDESLOPES
3-ft. of Admix Soil Liner	3-ft. of Admix Soil Liner
60-mil. HDPE Secondary Geomembrane	60-mil. HDPE Secondary Geomembrane
LDS (Secondary) CDN	LDS (Secondary) CDN
Geosynthetic Clay Liner (GCL)	60-mil. Primary HDPE Geomembrane
60-mil. Primary HDPE Geomembrane	LCRS (Primary) CDN
12 oz. Cushion Geotextile	
Drainage Gravel and Leachate Piping	
Separation Geotextile	

Operations layer placement in Cell No. 2 commenced on September 13, 2005, following completion of all geosynthetic liner placement. A 3-ft. operations layer was placed on the floor and sideslopes of both cells and compacted as per the specifications.

DHI began placement and compaction of a 6.5-ft.-high soil shine berm around the outside perimeter of Cell Nos. 1 and 2 on October 5, 2005.

DHI began constructing the cell access road and catch basins on November 11, 2005. DHI excavated the infiltration area, ditch, and catch basin location south of Cell No. 2. The infiltration area was lined with a 12-oz. cushion geotextile and quarry spalls were placed over the geotextile. The catch basin was installed, backfilled, and CQA conducted the required testing and inspection services.

Following DHI's cell construction finalization, CQA demobilization activities were completed on December 17, 2005.

2. FOUNDATION AND SOILS

2.1 Introduction. This section provides a summary of the CQA services and testing associated with trench excavation for Cell Nos. 1 and 2, foundation preparation, and actual construction activities.

2.1.1 Scope of Services. The scope of ENVIROTECH'S services outlined in the CQA Plan consisted of the following:

- ❒ Provide pre-construction testing on embankment and backfill materials; and
- ❒ Monitor the excavation and determine the material types for stockpiling.

2.2 Excavation. DHI excavated IDF Cell Nos. 1 and 2 to include topsoil, compact Eolian sand, and compact-to-dense sand and gravel deposit materials. Excavation activities were initiated on August 24, 2004, and completed on November 23, 2004, with the cell footprint excavation. Approximately 1,130,000-cy of material was excavated and transported to the appropriate stockpile or embankment fill.

Following completion of operations layer, the access ramp in the unlined south excavation face was brought to final grade.

DHI utilized the following equipment during excavation operations:

- ❒ One (1) CAT[1] 5110 Mass Excavator
- ❒ One (1) CAT 385 Mass Excavator
- ❒ Eleven (11) CAT Ridged Frame Pay Haulers
- ❒ One (1) CAT 14 G Road Grader
- ❒ Two (2) CAT D6 LGP Dozer
- ❒ One (1) CAT D8 Dozer

[1] CAT® is a trademark of Caterpillar Incorporated, Peoria, Illinois

- One (1) CAT Front-end Loader
- One (1) Smooth Drum Roller

Excavation activities for Cell Nos. 1 and 2 were monitored by CHI CQA to ensure that the excavated materials were transported to the appropriate stockpiles as follows: **(a)** *deleterious stockpile* to include sage brush, vegetation, and roots; **(b)** *topsoil stockpile* to include the rich, organic soil near the surface of the excavation; **(c)** *base soil stockpile* to include Eolian sands selected as admix base soil; and **(d)** *operations stockpile* to include course-to-fine, free-draining sands in the lower part of the excavation. CHI CQA separated and confined the deleterious and topsoil stockpiles through visual observation. ENVIROTECH CQA collected and analyzed one (1) base soil sample per day and one (1) operations soil sample per lift of excavation to ensure that the soil properties met the required specifications. The soils were analyzed according to the IDF Detailed Design Cell 1 Construction Quality Assurance Plan Table 2-4, Table 2-5, and Table 2-7. CHI CQA inspected the excavated materials in order to ensure that the base soil and operations soil were placed in the proper stockpiles. CHI's daily reports for the exaction are located in Project Records Index (PRI) 7.11.

ENVIROTECH provided soil testing services during excavation activities from August 24, 2004, through completion on October 22, 2005.

2.3 Foundation Preparation. Following recommencement of the contract, DHI prepared for admix placement by grading, compacting, and moisture conditioning the foundation. DHI rough graded the foundation utilizing a D6 dozer and removed the grade trimmings in a Pay Hauler. Following rough grading activities, A D6 GPS dozer was utilized to complete fine-grading activities prior to DHI moisture-conditioning and compacting the admix.

DHI utilized a smooth drum roller to compact the cell floor surfaces to 95% of the maximum dry density, as determined by Standard Proctor (ASTM D698). Immediately prior to admix placement, DHI moisture-conditioned and proof-rolled the admix substrate with a smooth-drum vibratory roller to ensure a firm and stable foundation.

DHI moisture-conditioned the sideslopes until a minimum 3-in. of water penetrated the foundation prior to track-walking the referenced slopes and completing a minimum of four (4) passes with a D6 dozer. Immediately prior to placing admix on the foundation, DHI again moisture-conditioned the sideslopes until 3-in. of water penetrated the foundation.

CQA personnel monitored the following tasks associated with foundation preparation as per the CQA Plan:

- The foundation on the sideslopes and base of the cell was inspected for weak or excessively weathered foundation materials. All non-conforming areas were either compacted or reinforced with binder and compacted, as necessary.

- The foundation base was compacted to 95% of the maximum dry density, as determined by Standard Proctor (ASTM D698). The sideslopes were compacted utilizing a methodology established by engineering personnel. The foundation compaction procedures were observed and the testing activities documented.

- The base of the cell was proof-rolled prior to final acceptance. Any areas exhibiting excessive rutting, heaving, or softening were documented and repaired to CQA satisfaction.

Subsequent to completion of the above-referenced tasks, CQA personnel observed the following:

- The foundation surface was free of all deleterious materials, standing water, mud, ice, or frozen materials.

- The foundation surface was adequate for construction and no areas were excavated and backfilled.

- The foundation base and sideslopes met the technical specifications as determined by the CQA test methods and frequency summarized in Cell 1 CQA Plan Table 2-3.

- Stabilization and testing of the foundation where the subgrade materials were initially inadequate for construction.

Field moisture-density tests were conducted by ENVIROTECH personnel on the floor compacted foundation utilizing a Troxler[2] Model 3430 nuclear moisture-density gauge (ASTM D2922 and D3017). A total of seventy-two (72) moisture-density tests were conducted on recompacted foundation in both cell floors at a frequency of one (1) test per 5,623-sf. This testing frequency exceeded the CQA Plan's Table 2.3 minimum frequency of one (1) test per 10,000-sf.

The moisture-density test results were compared to the Standard Proctor results to determine the amount of relative compaction. A total of thirteen (13) Standard Proctors (ASTM D698) were conducted and represent all of the various materials encountered. The Standard Proctor results are included in PRI 7.3.1.1, 7.3.3.1, and 7.4.1. In areas where the test results

[2] Troxler® is a trademark of Troxler Electronic Laboratories Incorporated, Research Triangle Park, N. Carolina

indicated that the compaction did not meet the specified requirement, the contractor reworked and recompacted the areas in question until passing test results were achieved. The foundation density testing results is included in PRI 7.4.3.

Rogers Surveying, Inc., of Kennewick, Washington, conducted an "As-Built" survey subsequent to completion of foundation preparation activities. Based on this survey, an "As-Built" foundation point drawing was prepared to determine the minimum point elevations for soil liner placement. The foundation "As-Built" point drawing is included in PRI 7.15.1.

2.4 **Fill and Backfill.** CQA initially completed the earth fill testing associated with all cell roads and leachate tank pads. In addition, CQA completed the structural testing of the power line road and the south entrance road as well as the initial testing of the leachate tank pads. CQA also provided CQC services, as necessary, for backfill testing on the leachate system. CQA accomplished the following tasks associated with the above-referenced fill and backfill testing activities:

- ❒ Ensured that the foundation on which the fill materials were being placed met the technical specifications.
- ❒ Confirmed that the soils being placed met the technical specification requirements as detailed in Cell 1 CQA Plan Table 2-1 and Table 2-2.
- ❒ Confirmed that the compacted lift thickness was in accordance with the requirements outlined in the technical specifications.
- ❒ Ensured that the soil was tested for dry unit weight and compared to the 95% of Standard Proctor (ASTM D698) at the frequency indicated in Cell 1 CQA Plan Table 2-1 and Table 2-2.
- ❒ Ensured that the nuclear gauge was calibrated according to the frequencies dictated in the Cell 1 CQA Plan testing tables.

2.5 **Excavation Summary.** Excavation activity on IDF Cell Nos. 1 and 2 commenced on August 24, 2004. The excavation was completed on November 23, 2004, following removal of approximately 1.1-million-cy of material. DHI completed foundation preparation activities inside the cell limits on August 10, 2005. CQA verified that DHI completed the cell excavation to the design points provided in the design drawings. CQA also certifies that all fill and backfill placed met project specifications. CQA documented all certifications in the Layer Certifications PRI Index 7.2.

3. LINER SYSTEM

This section provides a summary of the CQA observations and testing associated with construction of the soil and geosynthetic liner system for Cell Nos. 1 and 2. In addition, the observations and testing associated with construction of the drainage layers is addressed. The liner system (bottom-to-top) consists of the following:

- SLDS HDPE Geomembrane (Sump Only);
- SLDS CDN;
- SLDS Drainage Gravel;
- SLDS Operations Soil;
- Admix Soil Liner (3-ft.);
- Secondary HDPE Geomembrane;
- LDS (Secondary) CDN;
- Geosynthetic Clay Liner (floor);
- Primary HDPE Geomembrane;
- LCRS (Primary) CDN (slope);
- 12 oz Cushion Geotextile (floor);
- Drainage Gravel (1-ft., floor); and
- Separation Geotextile (floor).

Two (2) independent liner systems (i.e., primary and secondary) were constructed in the IDF protective barrier. Each system was designed to work synergistically between two (2) different protective barriers. In both systems, the 60-mil. geomembrane served as the primary hydraulic barrier while admix and GCL served as secondary hydraulic barriers in the secondary and primary liner systems, respectively. This multiple-layer system affords a high degree of confidence in the protective liner system.

3.1 **Scope of Services.** The scope of ENVIROTECH'S services conformed to the requirements of the CQA Plan for the IDF Cell Nos. 1 and 2 project and consisted of the following:

- Conduct pre-construction and conformance testing on the soil liner and geosynthetic components of the liner system;
- Conduct and certify the admix liner test pad, documented in RPP-RPT-26466 Construction QA (CQA) Soil Bentonite Liner Test Pad Report Integrated Disposal Facility (IDF) Cells 1 & 2.
- Monitor the admixing of bentonite with base material for soil liner material;
- Monitor soil liner construction;
- Monitor geosynthetic liner component installation;
- Monitor the construction of the gravel drainage layer and associated piping components; and
- Monitor filter and cushion geotextile placement.

ENVIROTECH provided full-time monitoring of liner activities from August 3, 2005, to November 3, 2005. Construction documentation included daily field reports by all on-site ENVIROTECH staff that were reviewed by the CQA monitor and submitted to CHG. In addition, weekly progress reports were prepared by the CQA Engineer and submitted to CHG.

- Del-Hur Industries, Inc. of Port Angeles, Washington, the construction subcontractor, operated the pug mill, constructed the admix test pad, installed the admix liner, and completed all earth work activities.
- Gundle/SLT Environmental, Inc. (GSE[3]) provided the textured 60-mil. geomembrane (product code HDT 060A00) and the CDN (product code F520600690S.)
- SI Geosolutions of Chattanooga, Tennessee, provided the 6- and 12-oz. non-woven geotextiles identified as GEOTEX 651 and GEOTEX 1291, respectively.
- CETCO, Inc. of Arlington Heights, Illinois, provided the geosynthetic clay liner (GLC) identified as product name Bentomat DN.

[3] GSE® is a trademark of GSE Lining Technology Incorporated, Houston, Texas.

- Great Basin Environmental (GBE) served as the liner installer subcontractor that worked under DHI.

3.2 **Material Certifications.** Manufacturer descriptive data was received for all geosynthetic materials and HDPE piping utilized in IDF Cell Nos. 1 and 2 construction. In addition, Manufacturer Quality Control (MQC) testing was required for certain liner materials. CQA utilized the manufacturer certifications and MQC testing to conduct receipt inspections on all liner materials prior to use in construction, as required. The certifications and receipt inspection locations are summarized in *Table 2*.

TABLE 2.
MATERIAL CERTIFICATIONS AND RECEIPT INSPECTION

LINER MATERIAL	DESCRIPTIVE DATA	MQC TESTING	RECEIPT INSPECTION.
60-mil. HDPE Geomembrane	DHI Submittal 49	DHI Submittal 50	PRI 7.7.3
6-oz. Separation Geotextile	DHI Submittal 30	DHI Submittal 31	PRI 7.5.1.2
12-oz. Cushion Geotextile	DHI Submittal 30	DHI Submittal 31	PRI 7.5.2.2
CDN	DHI Submittal 33	DHI Submittal 34	PRI 7.6.2
Geosynthetic Clay Liner	DHI Submittal 63	DHI Submittal 64	PRI 7.9.2
Extrusion Welding Rod	N/A	DHI Submittal 51	PRI 7.7.3
HDPE Piping	DHI Sub. 170	N/A	PRI 7.10.1

The above-referenced certifications were reviewed by CQA, DHI CQC, and design agent CHI. All entities certified that the above-referenced documents met the required specifications.

The receipt inspection associated with the liner materials included the following information:

- Manufacturer of the material;
- Date of delivery to the site;
- Date of inventory or receiving by the CQA;
- The truck type shipping the geosynthetics (i.e., flatbed, box trailer, etc.);
- Bill-of-lading number associated with the inspection;

- ❒ Name of the CQA representative conducting the inspection;
- ❒ Equipment utilized to unload the liner material;
- ❒ Any undue weather conditions associated with the unloading process;
- ❒ The type of material being received;
- ❒ The roll number being received;
- ❒ The amount of material being received (i.e., length, width, and area); and
- ❒ Any damage associated with the liner material observed upon receipt.

Any unlabeled or nonconforming rolls were segregated and removed from the site. No unaccepted liner/piping materials were incorporated into the landfill.

3.3 Manufacturing Plant Visit. In compliance with the Quality Assurance Plan and Cell Construction Specifications, CQA conducted a site visit to GSE's plant in Houston, Texas, on June 13, 2005. The referenced visit was coordinated in conjunction with the first production run of the site-specific geomembrane. CQA observed GSE manufacturing a fully-textured 60-mil. HDPE liner with no smooth edge. CQA notified CHG and DHI of the quality concern associated with a textured-to-textured weld over an admix surface. As a result of these discussions, GBE agreed to modify the remainder of the order for geomembrane with a smooth edge.

CQA observed all process stages of geomembrane production from receipt of raw resin to storage of completed product. In addition, a thorough inspection of GSE's in-house laboratory was conducted. CQA verified that the in-house laboratory was adequate for conducting the CQC testing outlined in the CQA Plan. The CQA report summarizing the geomembrane manufacturer plant visit is included in PRI 7.7.1.

3.4 Material Conformance Testing.

3.4.1 Bentonite Testing. Wyo-Ben[4] shipped a total of 161 bentonite rail cars to the rail yard in Pasco, Washington. Prior to shipping the rail cars, Wyo-Ben provided ENVIROTECH with a split sample from the MQC bentonite test sample for each lot. CQA conducted conformance testing on each sample and the corresponding lot

[4] Wyo-Ben® is a trademark of Wyo-Ben Incorporated, Billings, Montana.

number was verified against the rail car lot numbers. Following CQC's verification of the test results and ensuring that the sample number matched the lot number, DHI transported the bentonite to the site in blow trucks.

A total of 84 bentonite tests were conducted by CQA personnel and based on the laboratory analytical results, the bentonite met the required project specifications. CQA verified a testing frequency of one (1) conformance test per production lot. In addition, Wyo-Ben provided manufacturer's quality control certification and associated analytical results for each bentonite lot. The conformance testing was conducted in accordance with Cell 1 CQA Plan, Table 2.5 and Cell 2 CQA Plan, Table 2.4 and the associated documentation is included in PRI 7.8.2. All conformance testing was reviewed and approved by CH2M Hill Hanford Group, and the bentonite certifications are included in the Del Hur submittal 61.

3.4.2 HDPE Geomembrane. Approximately 1,300,000-sf (112 rolls) of 60-mil. smooth-edge and 290,000-sf (24 rolls) of 60-mil. textured-edge HDPE geomembrane liner material was delivered on-site. TRI Environmental Laboratory (TRI) (Austin, Texas) personnel observed the manufacture of the geomembrane and collected samples of selected rolls at the GSE plant as per the specified frequency outlined in the CQA Plan. The samples were shipped to the TRI geosynthetics laboratory in Austin, Texas, for conformance testing.

A total of thirty-five (35) rolls of 60-mil. HDPE geomembrane liner were sampled and tested for conformance with project specifications as part of the CQA testing program for the following properties:

- ❒ Thickness (ASTM D5199 or D5994);
- ❒ Tensile characteristics (yield strength and elongation at yield, ASTM D638);
- ❒ Asperity (GRI GM-12); and
- ❒ Puncture resistance (ASTM D4833).

These activities resulted in a CQA testing frequency of one (1) test per 45,427-sf of 60-mil. HDPE geomembrane. The CQA conformance testing frequency exceeded the CQA testing requirement of one (1) conformance test for every 50,000-sf of geomembrane liner delivered on-site. The test results were reviewed by ENVIROTECH personnel and determined to be in compliance with the required project specifications. The conformance test results are included in PRI 7.7.2.

In addition to the CQA conformance tests, the geomembrane manufacturer (GSE) provided manufacturer's quality control documentation summary for each roll of HDPE geomembrane. The manufacturer's quality control documents and test results were reviewed by ENVIROTECH personnel and design agent CHI and determined to be in compliance with the required project specifications.

3.4.3 Geotextile. The geotextile materials delivered on-site were 477,000-sf (106 rolls) of SI Solutions 6-oz. GEOTEX[5] 651 (Separation Geotextile) and 468,000-sf (104 rolls) of 12-oz. GEOTEX 1291 (Cushion Geotextile), non-woven, needle-punched, polypropylene fabrics. TRI personnel observed the manufacture of the geotextile and collected the conformance samples from selected rolls at the manufacturer's facilities. The samples were shipped to the TRI laboratory located in Austin, Texas, for testing.

A total of ten (10) rolls of separation geotextile and seventeen (17) rolls of cushion geotextile were sampled and tested for conformance with the required project specifications as part of the CQA testing program for the following properties:

- ❒ Permittivity (ASTM D4491, Type 1 only);
- ❒ Grab strength (ASTM D4632);
- ❒ Tear strength (ASTM D4533); and
- ❒ Puncture strength (ASTM D4833).

These activities resulted in an approximate geotextile CQA testing frequency of one (1) test per 47,700-sf of separation geotextile and one (1) test per 27,529-sf of cushion geotextile delivered on-site. The CQA conformance testing frequency exceeded the CQA testing requirement of one (1) conformance test for every 50,000-sf of geomembrane liner delivered to the site. With respect to the cushion geotextile, the increased frequency of testing was due to the non-sequential numbering of geotextile rolls and therefore, CQA chose to adopt a conservative approach in terms of testing frequency. The test results were reviewed by ENVIROTECH personnel and determined to be in compliance with the required project specifications. The conformance test results are included in PRI 7.5.1.1 and PRI 7.5.2.1.

The manufacturer of the geotextiles (SI Geosolutions) provided manufacturer's quality control documentation for all geotextile materials (both separation and cushion geotextiles). The manufacturer's quality control documents were reviewed by

[5] GEOTEX® is a trademark of Synthetic Industries Incorporated, Chickamauga, Georgia.

ENVIROTECH personnel and design agent CHI and determined to be in compliance with the required project specifications.

3.4.4 Composite Drainage Net (CDN). Approximately 1,150,000-sf (396 rolls) of composite drainage net (CDN) manufactured by GSE (product F520600690S) was shipped to the site. The CDN components consisted of a geonet with a layer of separation geotextile bonded to each side. Twenty-five (25) rolls of CDN were sampled and tested for conformance with the required project specifications as part of the CQA testing program for the following properties:

- *Geonet Testing:*
  - Polymer specific gravity (ASTM D1506);
  - Thickness (ASTM D5199); and
  - Nominal transmissivity (ASTM 4716 – one per production lot)
- *Composite Drainage Net Testing:*
  - Adhesion (GRI-GC7 or ASTM D413); and
  - Transmissivity (ASTM D4716 – one per production lot)

These activities resulted in a testing frequency of one (1) conformance test per 46,000-sf. The CDN CQA conformance testing frequency met the CQA testing requirement of one (1) conformance test for every 50,000-sf of CDN delivered to the site.

TRI personnel observed the manufacture of the CDN and collected the conformance samples at the manufacturer's facilities. The samples were shipped to the TRI geosynthetics laboratory in Austin, Texas, for testing. The test results were reviewed by ENVIROTECH personnel and determined to be in compliance with the required project specifications. The conformance test results are included in PRI 7.6.1.

In addition to the conformance tests, the manufacturer of the CDN (GSE) provided a manufacturer's quality control documentation summary for every roll of HDPE geomembrane. The manufacturer's quality control documents and test results were reviewed by ENVIROTECH personnel and design agent CHI and determined to be in compliance with the required project specifications.

3.4.5 Geosynthetic Clay Liner (GCL). Approximately 448,000-sf (206 rolls) of GCL material was manufactured by CETCO[6] (Bentomat[7] DN) and shipped to the site. Ten (10) rolls of GCL were sampled and tested for conformance with the required project specifications as part of the CQA testing program for the following properties:

- ❒ Index Flux (ASTM D5887);
- ❒ Bentonite Mass per Unit Area (ASTM 5993); and
- ❒ Bentonite Swell Index Test (ASTM D5890)

These activities resulted in a testing frequency of one (1) conformance test per for every 44,800-sf. The GCL CQA conformance testing frequency met the CQA testing requirement of one (1) conformance test for every 50,000-sf of GCL delivered to the site.

TRI personnel observed the manufacture of the GCL and collected the conformance samples at the manufacturer's facilities. The samples were shipped to the TRI geosynthetics laboratory in Austin, Texas, for testing. The test results were reviewed by ENVIROTECH personnel and determined to be in compliance with the project specifications. The conformance test results are located in PRI 7.9.1.

In addition to the CQA conformance tests, the manufacturer of the GCL (CETCO) provided a manufacturer's quality control documentation summary for each roll of HDPE geomembrane. The manufacturer's quality control documents and test results were reviewed by ENVIROTECH personnel and determined to be in compliance with the required project specifications.

3.5 Secondary Leak Detection System (SLDS). This section provides a summary of the CQA observations and testing associated with the construction and placement of the SLDS trench for Cell Nos. 1 and 2.

3.5.1 SLDS Construction Activities. An SLDS trench was constructed under the sump on Cell Nos. 1 and 2. After excavating the SLDS trenches to the required depth and geometry, the foundation was compacted to 95% of the Standard Proctor.

A 60-mil. textured tertiary geomembrane was installed on the compacted foundation. The individual liner panels were placed and joined in compliance with the GBE-

[6] CETCO® is a trademark of AMCOL International Corporation, Arlington Heights, Illinois.
[7] Bentomat® is a trademark of American Colloid Company, Arlington Heights, Illinois.

approved liner installation plan (DHI submittals 53.C and 53.C.1.) A layer of CDN material was placed on top of the 60-mil. liner to provide a cushion between the liner and operations soil.

A SLDS pipe trench was excavated from the anchor trench, down the embankment, and into the SLDS sump. Morrison welded the slotted HDPE 12-in.-dia. HDPE SRD 17 pipe to the 18° elbow. Morrison continued to weld 20-ft sections of 12-in.-dia. HDPE SDR 17 sump pipe to the 18° elbow at the shoulder of the north slope and forced the previously-welded sections down the slope and over the foundation. The SLDS trench extended down the slope, penetrated the 60-mil. geomembrane and CDN before extending to the south across the floor of the SLDS sump to a distance of 5-ft. 7-in. from the south toe of the sump according to the design drawings. The pipe was perforated from the sideslope transition point to the end cap. The pipe was booted, welded, and clamped according to the referenced design drawings.

In compliance with the design drawings, a drainage gravel berm was placed over the SLDS pipe and compacted utilizing a flat plate compactor to design contours. GBE then deployed several 6-oz. geotextile panels across the sump and over the drainage gravel berm. A 2.5-ft.-thick section of operations soil was placed over the 6-oz. geotextile and around the perimeter of the SLDS drain gravel berm. The operations soil was compacted to 95% Standard Proctor (ASTM D698).

3.5.2 SLDS CQA Activities.

3.5.2.1 SLDS HDPE Geomembrane Liner Deployment. GBE submitted a proposed panel layout drawing depicting the number and orientation of the geomembrane panels prior to geomembrane deployment. During deployment, ENVIROTECH personnel recorded the location of the panels deployed. The tertiary geomembrane liner panel layout is graphically depicted on *Figure 1* and located in PRI 7.15.2.

During geomembrane liner deployment, ENVIROTECH personnel provided the following services:

- ❒ Foundation surface inspection;
- ❒ Confirmation of panel overlap;
- ❒ Assignment of a unique identification number to each panel deployed;

Final Report – Construction Quality Assurance (CQA)
Integrated Disposal Facility (IDF)
Cell Nos. 1 And 2
Subcontract No. 26693
RPP–RPT–29276, Rev. 0
CH2M Hill Hanford Group
05084–00–25

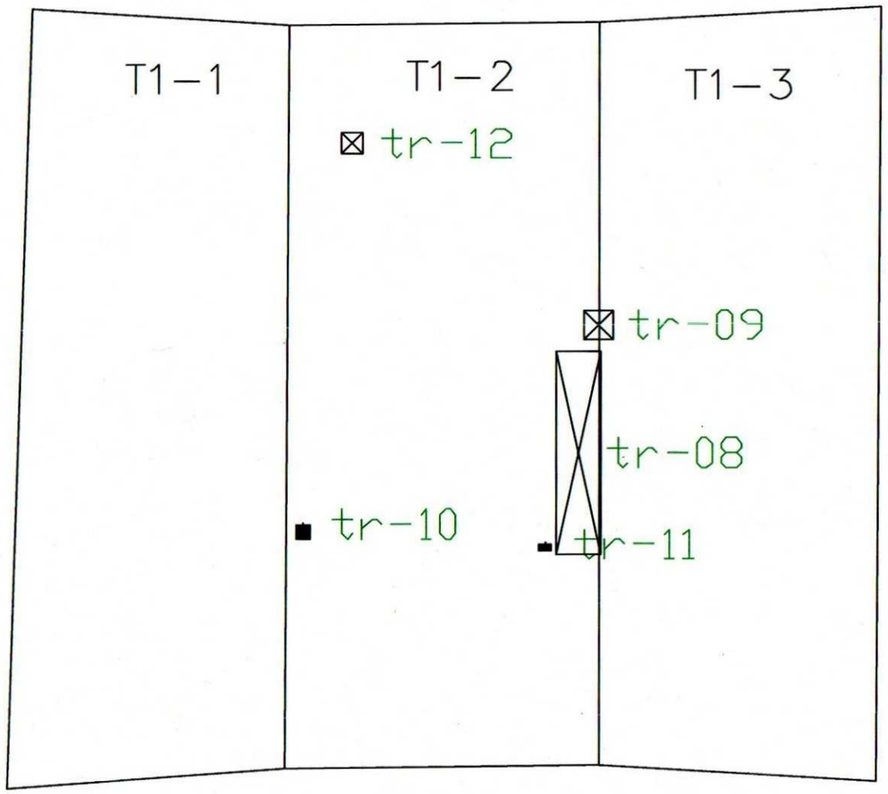

Cell 1 Tertiary Liner

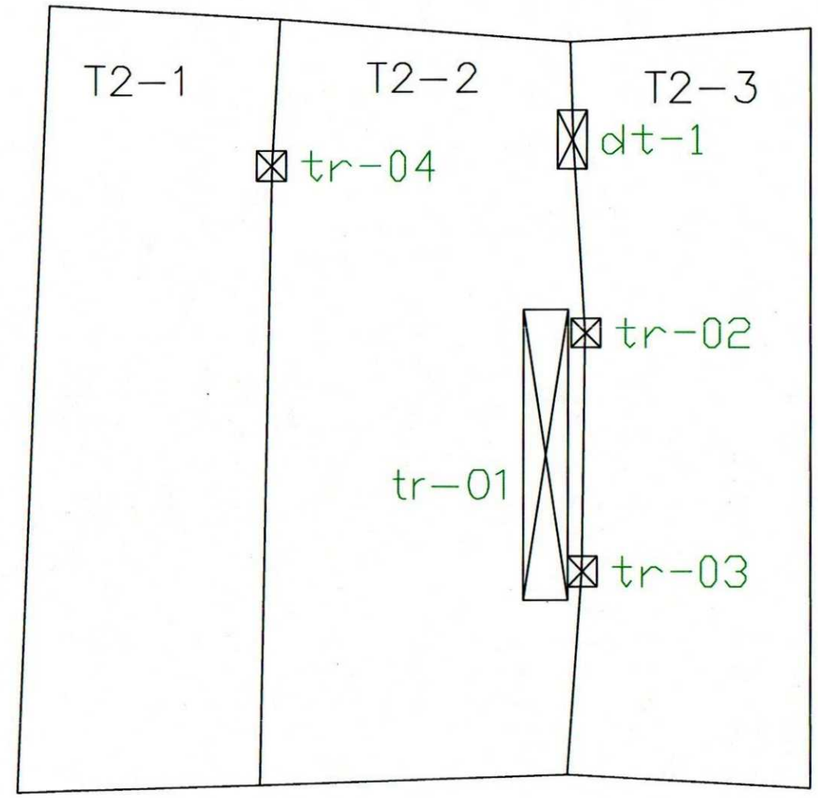

Cell 2 Tertiary Liner

LEGEND

T-	Tertiary Panel Number
TR-	Tertiary Repair
DT-	Tertiary Destruct Sample
- - -	Toe of Slope
⊠	Patch/Cap
—	Bead

N

ENVIROTECH
ENGINEERING & CONSULTING, INC.
2500 North 11th Street, Enid, Oklahoma 73701
Phone (580) 234-8780, Fax (580) 237-4802
C.A. #1960 - Expiration Date: 6-30-2006
www.envirotechconsulting.com

Figure 1
Cells 1 and 2 Tertiary Geomembrane

Date: 1-19-06
Scale: 1:10
Drawn by: John Stovall
Checked By: Joe Voss
Project No. 05084-CH2M Hill
CH2M Hill Project No. 26693

Sheet No. 1 of 1

- Visual observation of overall sheet quality;
- Monitoring of QC testing;
- Identification of defects and repairs;
- Monitoring of GBE welding practices;
- Ensure that the geotextile was not exposed to ultraviolet radiation in excess of fourteen (14) days following deployment;
- Sampling, recording and testing of the destructive seam samples;
- Recording of all test data and observations; and
- CQA issued a layer certification located in PRI 7.2, which verifed that that the SLDS geomembrane liner installation met project specifications.

3.5.2.2 **SLDS Composite Drainage Net Installation.** Prior to deployment of the CDN and geotextile, ENVIROTECH personnel monitored the surface of the tertiary geomembrane for wind-blown sand and other foreign objects. In some instances, GBE used leaf blowers and brooms to remove excess wind-blown sand or litter prior to installing the CDN and geotextile materials. CQA monitored the following activities during CDN installation:

- During excessive wind events, the CDN was weighted down with sand bags.
- The tertiary CDN was kept under tension to minimize wrinkles.
- Hooked bladed knives were utilized to cut the CDN.
- The contractor took necessary precautions to prevent damage to the underlying materials.
- CQA confirmed that the tertiary CDN was not welded to the geomembrane.

- The geotextile was not exposed to ultraviolet radiation in excess of fourteen (14) days following deployment.

- Visual examination of the tertiary CDN was conducted by CQA. Any foreign objects, either in or underneath the deployed materials, were removed.

- CQA issued a layer certification located in PRI 7.2, which verified that the SLDS CDN installation met project specifications.

3.5.2.3 SLDS Drainage Gravel. Prior to and during drainage gravel placement, ENVIROTECH personnel reviewed all CQC conformance data to verify that it met required project specifications. In compliance with the layer certification documentation, CQA ensured that all underlying geosynthetic layers were completed and accepted, and that no holes, tears, excessive wrinkles, or foreign objects were present. CQA monitored/observed the following activities during construction:

- Drainage gravel was non-angular and free of material that could damage the underlying materials.

- The material was distributed during cooler portions of the day. When the temperature increased, CQA informed DHI who voluntarily ceased operations.

- CQA ensured that an adequate amount of drainage gravel was maintained between the haul trucks and the underlying geosynthetics, as per the technical specifications.

- CQA visually monitored the gravel thickness during and after placement.

- CQA visually monitored compaction of the drainage gravel, as per the technical specifications.

- CQA ensured that DHI personnel monitored distribution of the drainage gravel onto the underlying geosynthetics in order to confirm that no damage or "wrinkles" had occurred. The DHI personnel trapped any developing wrinkles in the drainage gravel in order to halt wrinkle propagation.

- CQA confirmed that no damage occurred to the underlying geosynthetics.

- CQA issued a layer certification located in PRI Index 7.2, which verified that the SLDS drainage gravel installation met project specifications.

3.5.2.4 SLDS HDPE Piping. ENVIROTECH personnel reviewed pipe quality control certificates and welder operator certifications to confirm that the materials and construction methods met project specifications. CQA also verified that slot dimensions in the slotted pipe conformed to the technical specifications. ENVIROTECH monitored the butt fusion welding of the HDPE pipe on a procedural basis and the observed welds were completed as per the manufacturer's recommendations. CQA observed Morrison removing weld beads from the riser pipes and the contractor conducting pressure testing on the LDS pipes and extensions. Prior to and after installation, CQA inspected the pipes for damage, mishandling, and adverse exposure. Following installation activities, CQA witnessed the QC function testing on the pipes that is documented in DHI submittals 194.

Roger's Surveying, Inc., of Kennewick, Washington, conducted an "As-Built" survey of the pipes to ensure the placement and orientation of the piping was in accordance with the project specifications and design drawings. "As-Built" shots were taken at the beginning and end of each pipe, at the grade breaks, elbows, and sump extensions. The survey drawings for the SLDS piping are located in PRI 7.15.8. CQA confirms that the pipes were constructed and placed according to the requirements outlined in the technical specifications.

3.6 Low-Permeability Soil Liner (Admix). This section provides a summary of the CQA observations and testing associated with the construction and placement of the admix soil liner in Cell Nos. 1 and 2.

3.6.1 Construction Activities. All work associated with soil liner materials for Cell Nos. 1 and 2 was conducted by Del-Hur Industries. Admix soil liner base material for Cell Nos. 1 and 2 was segregated and stockpiled from the mass excavation activity. Temporary Acceptance (TA) #2 approved the construction of the admix liner test pads on April 5, 2005, and the admix liner test pad construction and CQA Officer certification is documented in a separate report entitled, RPP-RPT-26266 CONSTRUCTION QA (CQA) SOIL BENTONITE TEST PAD REPORT INTEGRATED DISPOSAL FACILITY (IDF) CELLS 1 & 2. Preparation of the soil liner material

consisted of adding water and bentonite to the base soil. Soil liner placement was implemented on June 27, 2005, for Cell No. 2. TA #3 was issued on July 6, 2005, approving the construction of the admix soil liner in Cell 1. DHI began construction of the admix soil liner in Cell No. 1 on July 6, 2005, and completed installation on September 26, 2005.

The soil liner material consisted of native Eolian sand with added nominal 12% bentonite Hydrogel supplied by Wyo-Ben, Inc. of Billings, Montana. Approximately 170,000-tons of admix soil liner material was produced during construction of Cell Nos. 1 and 2, which translates to approximately 109,000-cy of placed admix. DHI placed 93,000-cy of admix soil liner into Cell Nos. 1 and 2, and the remainder of the admix soil was stockpiled west of the topsoil stockpile. Approximately 130,000-tons (dry weight) of loose, stockpiled base soil and 15,600-tons of bentonite (an average bentonite content of 12%) were used to create the soil liner material (PRI 7.8.4). The bentonite supplier provided quality control documents demonstrating that the bentonite met the minimum project specifications located in DHI Submittal Log 61. In accordance with Cell 1 CQA Plan Table 2-5, CQA provided quality assurance testing on the bentonite and base soil material properties that are located in PRI 7.8.2 and 7.8.3, respectively.

A pug mill was utilized to mix the base soil, bentonite, and water to produce soil liner material that met the specified bentonite and moisture contents. Prior to producing admix, CQC verified the following:

- ❒ The equipment and methods used to produce the admix were the same as utilized for the test pad.
- ❒ All pug mill submittals were reviewed and approved.
- ❒ The pug mill was calibrated and functioning properly.
- ❒ CQA confirmed that DHI had installed a 1-in. screen on the base soil hopper in order to ensure no rocks larger than the dimensions specified in the technical specification requirements entered the admix.

CQA monitored and verified, through QA testing, CQC controls during pug mill operations. CQC confirmed base soil moisture content and admix soil moisture content at various times throughout each production day and utilized these properties to set the pug mill controls. CQA verified these parameters daily with belt scale testing (PRI 7.8.4). The soil liner material was then allowed to cure in stockpile for a minimum 12-hr. period prior to placement in Cell Nos. 1 and 2.

From the curing stockpile, the soil liner material was transported to Cell Nos. 1 and 2 utilizing Caterpillar rigid-frame Pay Haulers. The material was spread onto CQA-approved foundation in 10- to 12-in.-thick loose lifts with a GPS-enabled Caterpillar D6 dozer and compacted to 6-in. with a Caterpillar 825 sheepsfoot compactor. The material was placed at a moisture content between 10% and 19% and compacted so that the corresponding moisture-density point fell within the CQA-recommended rectangle, as graphically depicted on *Figure 2*. The final lift was overbuilt and cut to grade with the D6 GPS dozer before the final surface was finished with a smooth-drum roller. Following completion of the soil bentonite liner, DHI continued to maintain the surface of the admix through moisture conditioning. Prior to placement of the overlaying secondary geomembrane, DHI moisture-conditioned and proof-rolled the surface to CQA satisfaction.

Rogers Surveying, Inc., of Kennewick, Washington, conducted a CQA "As-Built" survey following placement, compaction, and soil liner finishing activities. From the previous foundation survey, an "As-Built" point drawing was prepared to determine minimum point elevations for the soil liner. The "As-Built" drawing (PRI 7.15.3) indicated that the soil liner material met the minimum 3-ft.-thick project requirements as well as the minimum 1% slope requirements at each cell centerline grade break.

3.6.2 CQA Activities.

3.6.2.1 Construction Monitoring. Prior to and during soil liner placement, ENVIROTECH personnel conducted CQA testing of the soil liner material, base soil, and bentonite to confirm that the material met the required project specifications. *The type and frequency of testing is summarized in Table 3.*

All laboratory analyses of the soil liner material (with the exception of permeability and bentonite testing) were conducted in ENVIROTECH'S on-site laboratory. Permeability and bentonite testing was conducted by ENVIROTECH personnel at their permeability laboratory in Enid, Oklahoma.

Prior to admix soil production, the bentonite QC testing results were reviewed and CQA bentonite and base soil testing was conducted. Bentonite samples were shipped directly from the Wyo-Ben plant to Enid, Oklahoma, for analysis. Base soil testing occurred during excavation activities at a frequency of one (1) test per day and were completed prior to pug mill mobilization. Laboratory analytical results indicated that the

Figure 2: Admix Acceptable Zone

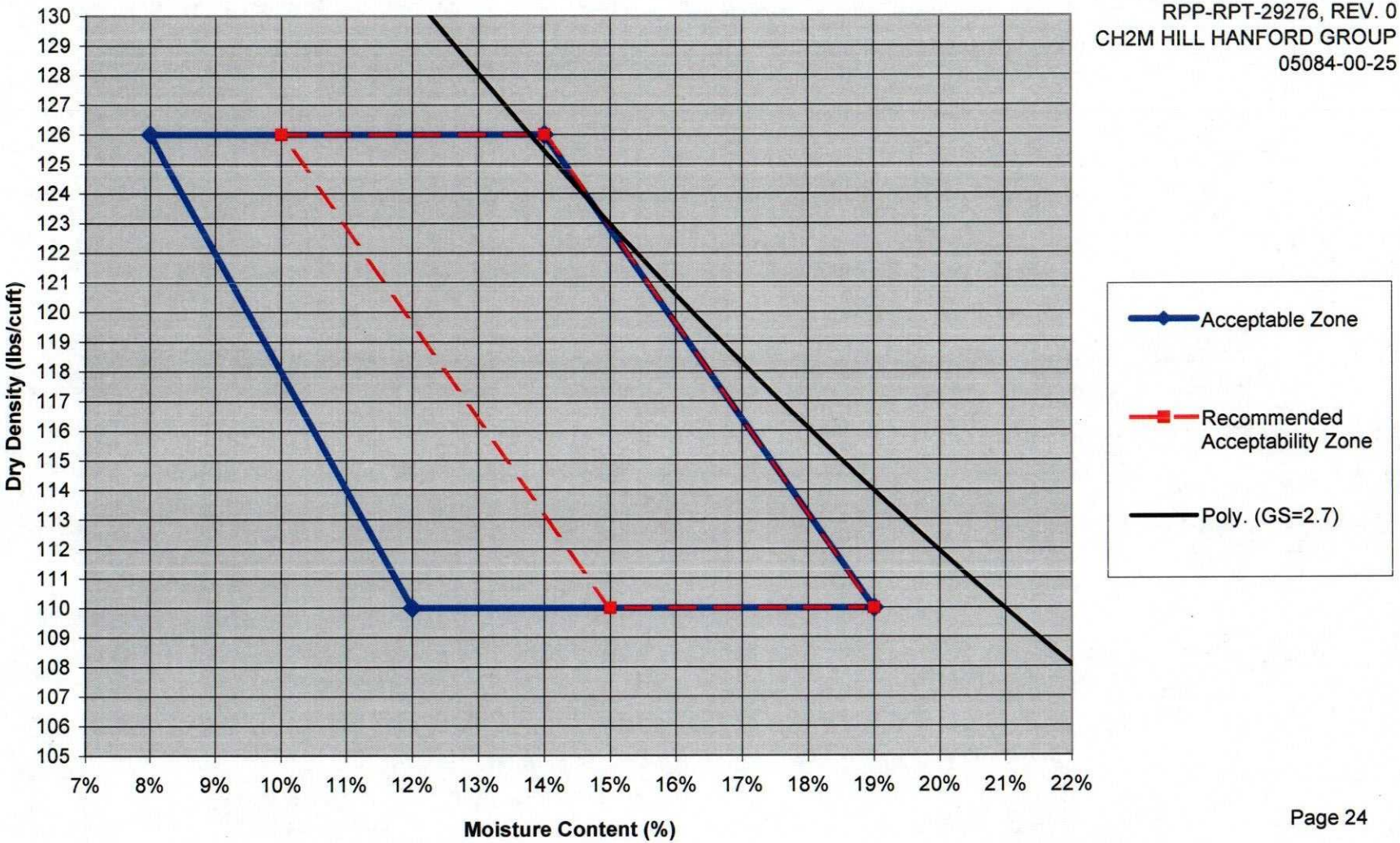

placed soil liner met the requirements of the project specifications (PRI 7.8.3).

During admix soil liner production activities, CQA conducted daily pug mill monitoring. CQA collected belt scale averages over short time periods and compared the numbers with daily totals provided by DHI. CQA verified that the admix was mixed uniformly and applied at the application rate specified in the technical specifications. In addition, CQA monitored the admix soil's clod size. In the event that the clod size became too large, CQA notified the pug mill operators who made adjustments to decrease the clod size.

CQA also collected samples from the stockpiled admix soil prior to admix placement. CQA conducted Atterberg Limits, percent fines, and natural moisture content analyses on the samples. The laboratory analytical results are included in PRI 7.8.5.2.

During soil liner placement activities, CQA conducted periodic observations to ensure that no deleterious materials were present in the liner and that the equipment was making two (2) passes on the floor and three (3) passes on the sideslopes. In addition, CQA confirmed loose lift thickness readings from the GPS dozer setting on a periodic basis.

Following soil liner placement, CQA conducted field-testing on the admix soil. In-place moisture density field tests were conducted utilizing a Troxler Model 3430 nuclear gauge. In addition, undisturbed permeability test samples were collected from Cell Nos. 1 and 2 by advancing 3-in.-dia. Shelby tubes into the compacted soil liner. The sample tubes were shipped to ENVIROTECH'S permeability laboratory in Enid, Oklahoma, for analysis. The field test results indicated that the placed and compacted soil liner material met the requirements of the project specifications. In the event of a failing field density test, the contractor reworked the area by recompacting and/or adjusting the moisture content before retesting the area. The original test identification with a letter suffix was used to designate retests of failing areas. In the event of a failing Shelby tube, the area in question was identified and the cause of the failure investigated. After a definite cause was identified, the area was isolated and the failing admix removed. The admix was replaced and retested. The original test designation with a letter suffix was again used to designate the retest area. CQA recorded an average permeability of 2.34×10^{-8} cm/s over 117 Shelby

Tube samples. The laboratory analytical results for the construction soil liner testing activities are summarized in PRI 7.8.6.1.

The CQC surveyor also collected lift thickness survey points on the compacted lifts of the admix liner. CQA analyzed these points to verify the compacted admix thickness as per the required specifications.

In addition to the testing summarized in *Table 3,* ENVIROTECH personnel observed the placement and compaction of the soil liner material to confirm that the mixing, moisture, and material quality were maintained. All penetrations made in the soil liner during the course of testing were backfilled with bentonite material. The backfill material was compacted by hand in the same manner as successfully demonstrated during construction of the soil liner test pad. CQA certified that each lift was tested in accordance with the requirements outlined in Cell 1 CQA Plan Table 2.5.

CQA issued an admix layer certification located in PRI 7.2 after each lift certifying that the lift met project specifications. CQA verified that the admix soil liner met project specifications.

3.7 Secondary HDPE Geomembrane Liner. This section provides a summary of the CQA observations and testing associated with the deployment and welding of the secondary geomembrane in Cell Nos. 1 and 2.

3.7.1 Construction Activities. Construction of the secondary geomembrane liner was implemented on August 8, 2005, and completed on October 17, 2005. The geomembrane material used in the construction of the secondary geosynthetic liner system for Cell Nos. 1 and 2 consisted of 60-mil.-thick, textured, high-density polyethylene (HDPE) geomembrane. Deployment of the secondary geomembrane liner panels were initiated at the south end of the east slope in Cell No. 2 and proceeded north, running east-west across and down the slope to the NE/corner. Panels were then placed on the north slope proceeding west, running north-south on the north slope and over the floor of the cell to the south termination. The deployment of the geomembrane liner panels in Cell No. 1 proceeded in a similar manner, beginning at the south toe of the west slope to the northwest termination, then along the north slope and floor to the tie-in with the Cell 2 panels at the cell division. The secondary geomembrane was deployed according to the approved *Panel Placement Plan* submitted by DHI under Submittal 53.C and 53.C.1.

Prior to placing secondary geomembrane in the sumps, an additional protective layer of secondary GCL was deployed over the admix surface to reinforce the secondary

protective layer. Several panels of GCL were deployed in the sump and seamed with granular bentonite utilizing the GSE Gund Seal system.

TABLE 3.
TYPE AND FREQUENCY OF
SOIL LINER MATERIAL (ADMIX) AND BASE SOIL TESTING

		TEST	REQUIRED FREQUENCY	TESTS REQUIRED	TESTS PERFORMED	ACTUAL [1] FREQUENCY
Pre-Construction	Bentonite	MQC Certificates	1/Lot	81	81	1/Lot
		Dry Fineness	1/Lot	81	81	1/Lot
		High Swelling	1/Lot	81	81	1/Lot
	Admix	Atterberg Limits (ASTM D4318)	1/1,000-yd.^{3}	110	112	1/978-yd.^{3}
		Particle Analysis (ASTM D422)	1/1,000-yd.^{3}	110	112	1/978-yd.^{3}
		Natural Moisture (ASTM D2216)	none	none	112	1/978-yd.^{3}
		Bentonite/Base Soil Application Rate	1/day	39	39	1/day
		Max Clod Size	Visual	Periodic	Periodic	Periodic
		Lift Thickness	Periodic Monitoring	Periodic Monitoring	Periodic Monitoring	Periodic Monitoring
	Base Soil	Particle Analysis (ASTM D422)	1/day of excavation or material change	14	14	1/day of excavation
		Natural Moisture (ASTM D2216)	1/day of excavation or material change	14	14	1/day of excavation
Construction	Admix	Lift Thickness	1/8712 ft^2/lift	424	696	1/5,300-ft^2
		Field Moisture Nuclear Density (ASTM D2922 and D3017)	1/8712 ft^2/lift	508	560	1/7,900-ft^2
		Permeability Shelby Tube (ASTM D5084)	43560 ft^2/lift	102	117	1/37800-ft^2/lift
		Compactor Passes	1/8712 ft^2/lift	508	Continuous	Continuous
		Moisture Content (ASTM D2216, 4643)	1/ 10 Nuclear Density	51	212	1/2.6 Nuclear Density

Notes: 1. All admix frequencies were developed based on a calculated volume of 81,925-yd^3 and 737,000-ft^2 of compacted admix placed.

Only initial nuclear moisture-density tests were used to calculate the actual frequency.

Prior to deployment of the geomembrane liner, ENVIROTECH personnel and the installer evaluated the soil liner surface for conformance with project specifications as follows:

- ❒ The foundation surface did not encompass holes, depressions, or protrusions in excess of the dimensions specified by the technical specifications.
- ❒ The surface was proof-rolled utilizing a smooth-drum roller to form a stable base without ridges, wheel ruts, and/or surface irregularities.
- ❒ The surface was free of any deleterious materials.
- ❒ The construction general contractor certified, in writing, that the surface was acceptable for geomembrane installation (DHI Submittal 55).

The geomembrane liner panels were deployed using manual laborers and a forklift. A minimum overlap of 5-in. was maintained between adjoining panels when joined by the fusion welding process. A minimum overlap of 3-in. was maintained between adjoining panels when joined by the extrusion welding process. The edges of the deployed geomembrane panels were temporarily held in-place with sandbags to prevent movement resulting from wind action.

The geomembrane liner panel seaming process proceeded concurrently with panel deployment activities. The majority of the seams were made with a double hot-wedge fusion welder, and repairs were completed with an extrusion welder. GBE repaired defects in the secondary geomembrane liner resulting from manufacturing defects, testing, environmental factors, and processes utilized during installation. In addition, GBE conducted quality control testing for the seaming and all repairs conducted on the secondary geomembrane.

Extension panels were welded to the secondary geomembrane on the south termination of the liner to extend the liner through the anchored trench, as required.

Secondary geomembrane installation was periodically discontinued due to high winds or rain. During these weather events, the installed geomembrane was temporarily sealed to prevent rainfall runoff from migrating under the geomembrane liner and damaging the soil liner. In the event of high winds, the installed geomembrane edges were heavily anchored with sandbags.

Anchor trenches were excavated by DHI at the slope tops in Cell Nos. 1 and 2. The inside top corners of the anchor trenches were rounded with hand tools, creating a smooth gradual interface between the sideslope and the anchor trench according to the contract specifications. The top of the secondary geomembrane extended over

the rounded edge into the anchor trench and over the floor of the anchor trench for a minimum of 2-ft. as per the design drawings.

3.7.2 CQA Activities.

3.7.2.1 Geosynthetic Clay Liner (GCL). CQA monitored deployment of the GCL material in the secondary sumps. Prior to GCL deployment, CQA ensured that the foundation surface did not encompass any holes, ruts, or protrusions in excess of those specified in the technical specifications. In addition, CQA ensured that the foundation was firm and unyielding with no debris or frozen materials. Following CQC and CQA approval of the foundation surface, CQA and CQC issued separate foundation acceptance certifications.

During geomembrane liner deployment, ENVIROTECH personnel provided the following services:

- ❒ HDPE Geomembrane surface inspection;
- ❒ Confirmation of panel overlap;
- ❒ Assignment of a unique identification number to each panel deployed;
- ❒ Visual observation of overall sheet quality;
- ❒ Monitoring of QC testing;
- ❒ Identification of defects and repairs;
- ❒ Monitoring of GBE seaming practices;
- ❒ Ensured that the geotextile was not exposed to ultraviolet radiation in excess of fourteen (14) days following deployment.
- ❒ Identification and removal of inadequate or hydrated GCL;
- ❒ Recording of all test data and observations; and

- CQA issued a layer certification located in PRI 7.2, which verified that that the secondary geomembrane liner installation met project specifications.

During installation activities, CQA tracked each panel of GCL with a unique identification number that was linked to the receipt survey. GCL seaming activities were continuously observed by CQA personnel to verify that a minimal longitudinal overlap of 6-in. and a transverse overlap of 24-in. were maintained at all times. In addition, CQA monitored the GSE Gund Seal seaming system to ensure that an adequate amount of bentonite was utilized between panels.

No hydrated GCL was placed into the cells or covered with geomembrane material. All GCL was inspected prior to placement of the overlaying secondary geomembrane or whenever any question arose concerning GCL hydration. CQA certifies that all GCL placed met project specifications.

3.7.2.2 HDPE Geomembrane Liner Deployment. GBE submitted a proposed panel layout drawing depicting the number and orientation of the geomembrane panels prior to geomembrane deployment. During deployment, ENVIROTECH personnel recorded the location of the panels deployed. The secondary geomembrane liner panel layout is graphically depicted on *Figure 3* and located in PRI 7.15.4.

During geomembrane liner deployment, ENVIROTECH personnel provided the following services:

- Admix surface inspection;
- Confirmation of panel overlap;
- Assignment of a unique identification number to each panel deployed;
- Visual observation of overall sheet quality;
- Monitoring of QC testing;
- Identification of defects and repairs;
- Monitoring of GBE welding practices;

Final Report – Construction Quality Assurance (CQA)
Integrated Disposal Facility (IDF)
Cell Nos. 1 And 2
Subcontract No. 26693
RPP–RPT–29276, Rev. 0
CH2M Hill Hanford Group
05084–00–25

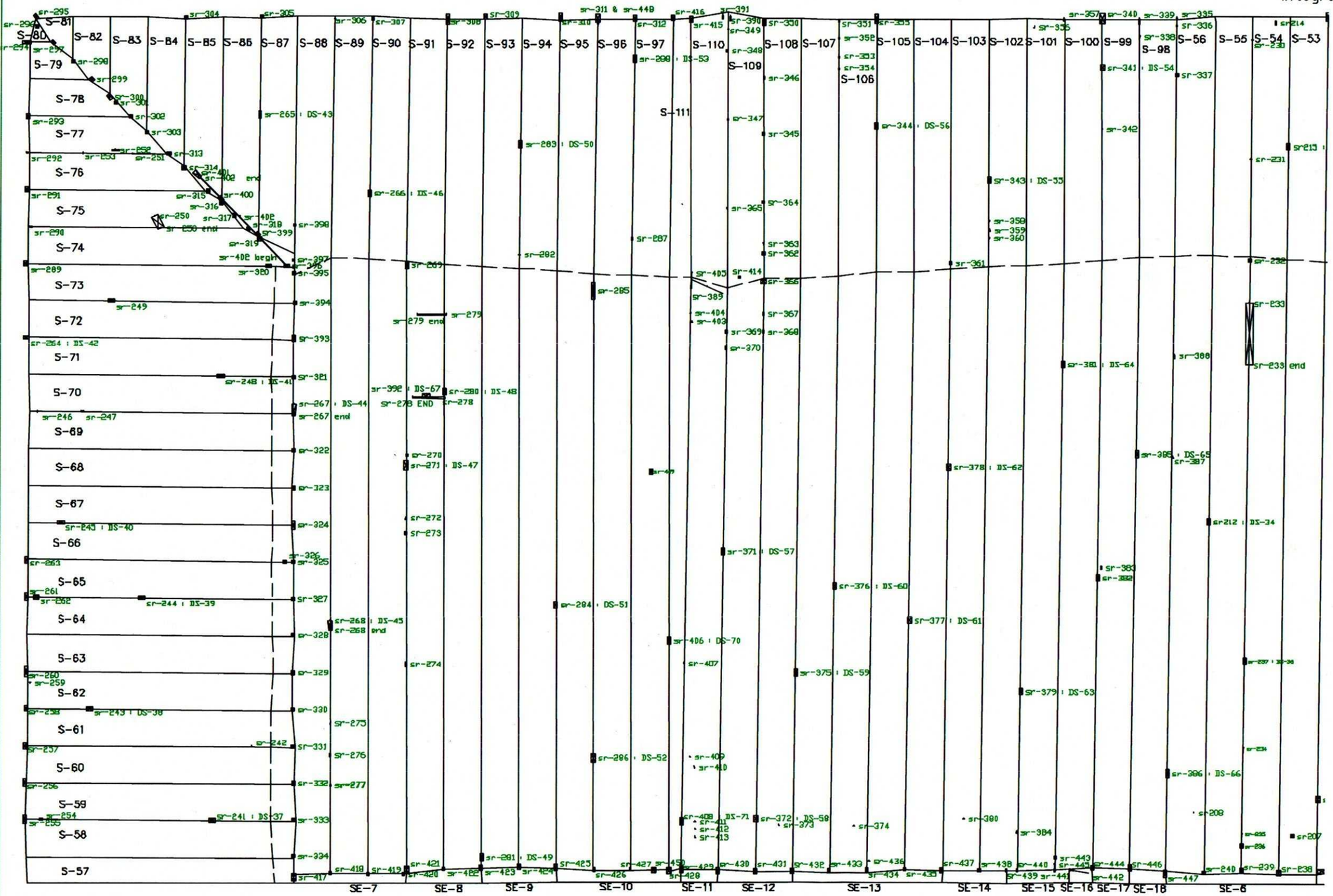

LEGEND

- S- Secondary Panel Number
- SE- Secondary Extension Panel
- SR- Secondary Repair
- DS- Secondary Destruct Sample
- Toe of Slope
- Patch/Cap
- Bead

N

ENVIROTECH
ENGINEERING & CONSULTING, INC.
2500 North 11th Street, Enid, Oklahoma 73701
Phone (580) 234-6780, Fax (580) 237-4302
C.A. 91960 - Expiration Date: 6-30-2006
www.envirotechconsulting.com

Figure 3
Cell 1 Secondary Geomembrane

Date: 1-19-06
Scale: 1:80
Drawn by: John Stovall
Checked By: Joe Voss
Project No. 05084-CH2M HN
CH2M HN Project No. 26693

Page No. 31
Sheet No. 1 of 3

Final Report – Construction Quality Assurance (CQA)
Integrated Disposal Facility (IDF)
Cell Nos. 1 And 2
Subcontract No. 26693
RPP-RPT-29276, Rev. 0
CH2M Hill Hanford Group
05084-00-25

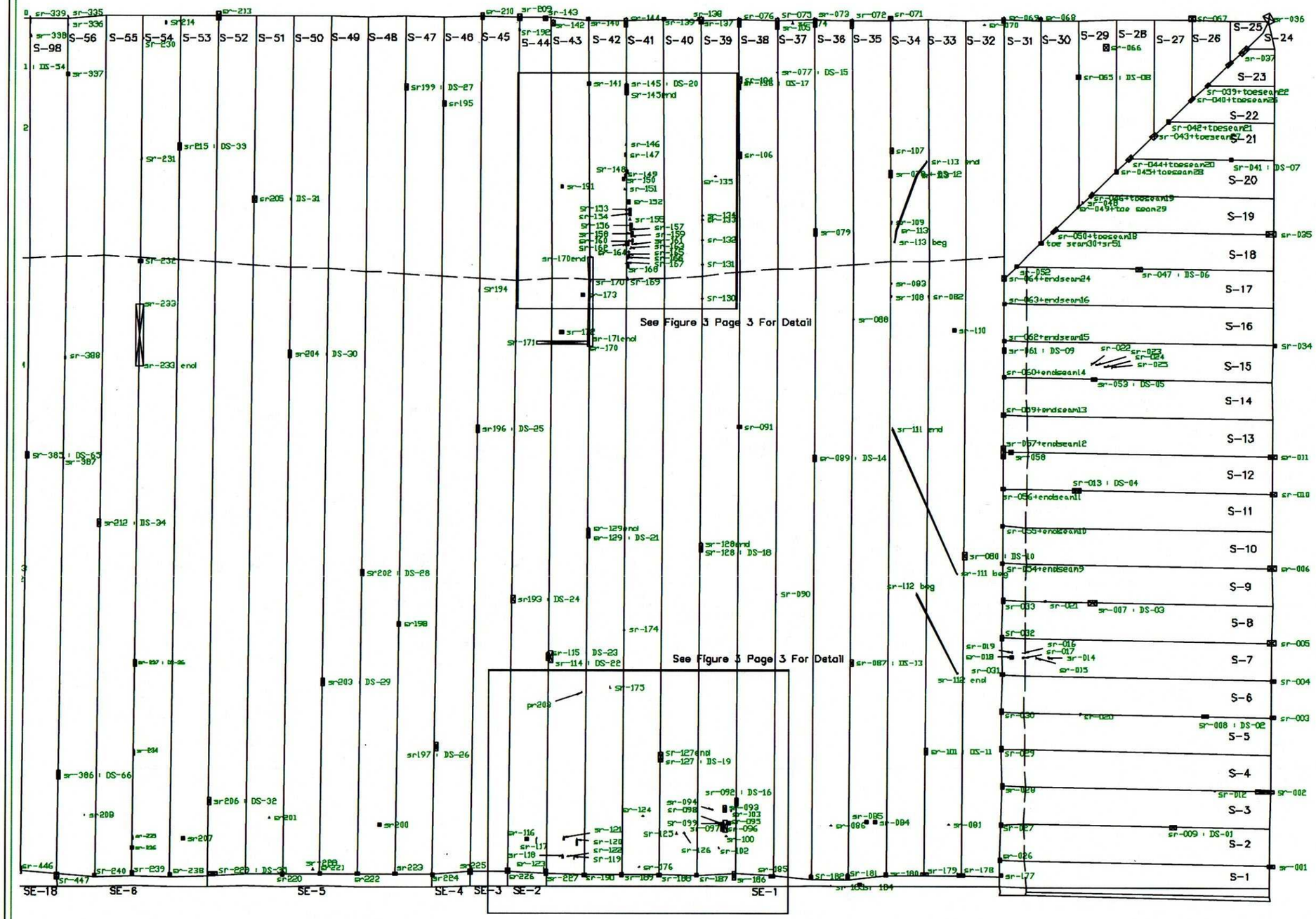

LEGEND

- S- Secondary Panel Number
- SE- Secondary Extension Panel
- SR- Secondary Repair
- DS- Secondary Destruct Sample
- Toe of Slope
- Patch/Cap
- Bead

N

ENVIROTECH
ENGINEERING & CONSULTING, INC.
2500 North 11th Street, Enid, Oklahoma 73701
Phone (580) 234-8780, Fax (580) 237-4302
C.A. #1960 - Expiration Date: 6-30-2006
www.envirotechconsulting.com

Figure 3
Cell 2 Secondary Geomembrane

Date: 1-18-06
Scale: 1:80
Drawn by: John Stevel
Checked By: Joe Vass
Project No. 05084-CH2M Hill
CH2M Hill Project No. 26693

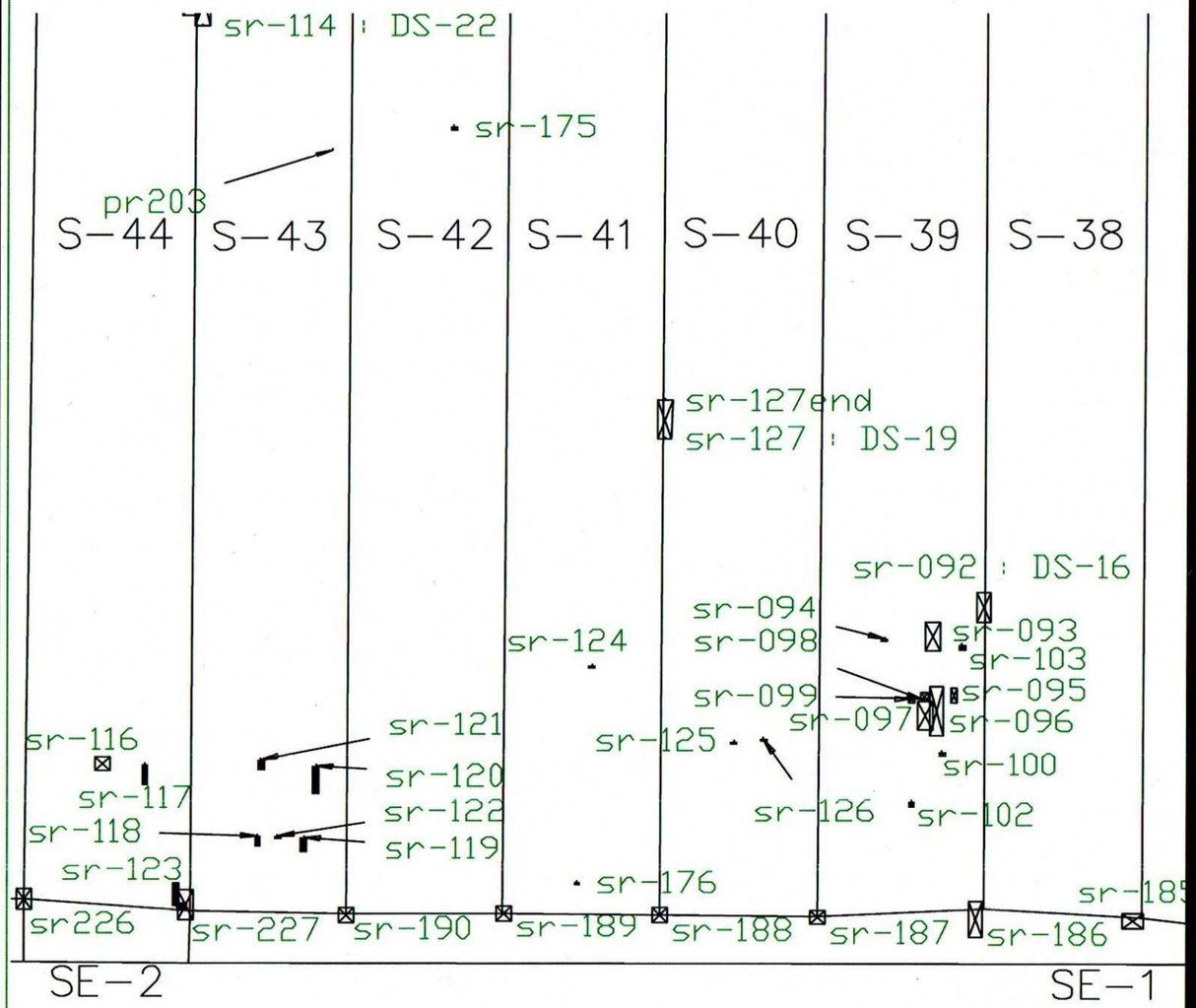

Secondary Cell 2 South Termination

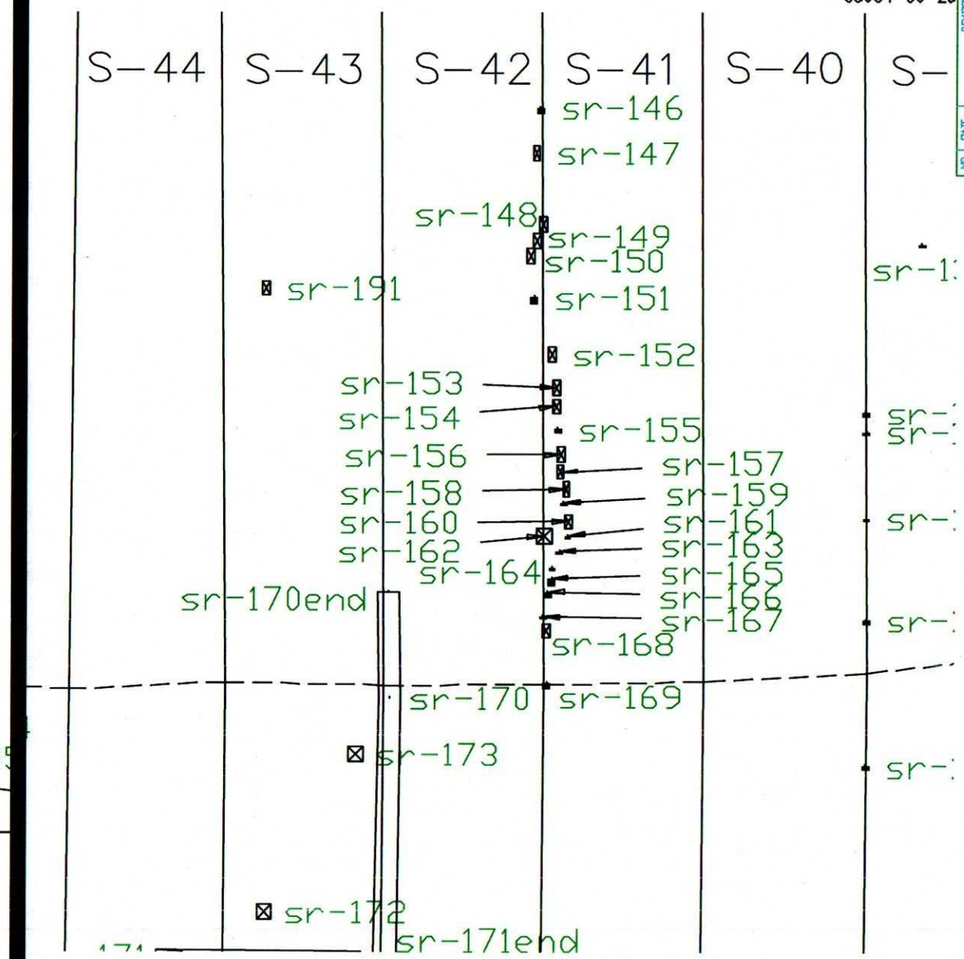

Secondary Cell 2 North Slope

ENVIROTECH
ENGINEERING & CONSULTING, INC.

N

Figure 3
Cell 2 Secondary Geomembrane

Date: 1-19-06
Scale: 1:20
Drawn by: John Sloan
Checked By: Joe Vose
Project No. 05084-CH2M Hill
CH2M Hill Project No. 29693

- Ensured that the geotextile was not exposed to ultraviolet radiation in excess of fourteen (14) days following deployment;
- Sampling, recording and testing of the destructive seam samples;
- Recording of all test data and observations; and
- CQA issued a layer certification located in PRI 7.2, which verified that that the secondary geomembrane liner installation met project specifications.

3.7.2.3 HDPE Geomembrane Liner Seaming. All HDPE geomembrane seaming was conducted by GBE personnel and observed by ENVIROTECH personnel. Trial seams were made by each welding technician (utilizing the type of welder to be operated) at the beginning of the shift and at 6-hr. intervals. In addition, trial seams were required in the event the type(s) of material being welded were modified during the 6-hr. shift. Samples were collected from each trial seam and tested in the peel-and-shear test modes utilizing a calibrated tensiometer provided by GBE. In the event a trial seam failed field testing, the welder and welding technician associated with the failing trial seam were not allowed to weld on the geomembrane liner until they produced a passing trial seam in accordance with the specifications. A summary of the trial seam results is presented in PRI 7.7.4.2.1.1 and 7.7.4.2.2.1.

The seaming operations were observed and documented by ENVIROTECH personnel. The entire length of all seams, patches, or other repairs were observed and documented either during or immediately following completion. During seaming activities, CQA observed GBE continuously cleaned each seam and verified that all seams were clean and free of moisture, dirt, debris, and foreign material. Approximately 18,800-lf of welding was required to join the secondary geomembrane liner panels in Cell No. 1 and 16,200-lf was required in Cell No. 2. A summary of CQA seaming observations is presented in PRI 7.7.4.2.

Rogers Surveying, Inc., of Kennewick, Washington, conducted a continuous CQA "As-Built" survey on the secondary liner system. The locations of the geomembrane liner seams and repairs are graphically depicted on *Figure 3* and presented in PRI 7.15.4.

3.7.2.4 Non-Destructive Seam Continuity Testing. The non-destructive seam continuity testing was conducted by GBE personnel and observed by ENVIROTECH personnel. All seams between panels and repairs made to the geomembrane liner system were non-destructively tested utilizing one (1) of the following non-destructive test procedures:

- ❒ Vacuum box testing on extrusion welds; and
- ❒ Air pressure testing on double hot-wedge fusion welds.

The vacuum box and air pressure testing were conducted in accordance with the required project specifications.

All leaks or discontinuities detected in the seams were marked and subsequently repaired in accordance with the project specifications. All non-destructive testing conducted by GBE met project specifications. Documentation summarizing the non-destructive test observations of the seams and repairs are presented in PRI 7.7.4.2.

3.7.2.5 Secondary HDPE Geomembrane Liner Repairs. Defects observed in the secondary geomembrane liner were located and marked in the field and assigned a unique identification number by ENVIROTECH personnel. The defects were repaired and non-destructively tested by GBE in accordance with the required project specifications. A summary of the defects and repairs is presented in PRI 7.7.4.2, and the defect repair locations are graphically depicted on *Figure 3* and located in PRI 7.15.4.

3.7.2.6 Destructive Testing. A total of seventy-two (72) destructive test samples were collected and tested using a calibrated tensiometer in ENVIROTECH'S on-site laboratory. CQA observed the cutting of each destructive sample and assigned a unique number to the sample. Each sample location was noted in both test records and located on the panel layout. In the event the destructive sample was other than routine testing, the purpose of the test was noted. The actual destructive testing frequency was at least one (1) destructive test sample for every 486-lf of panel seam welded. These activities met the specified frequency of one (1) test per 500-ft. of welded seam. The test sample locations were selected by ENVIROTECH personnel based on observations of the welded seams or random placement. GBE personnel cut the destructive seam samples and delivered them to ENVIROTECH for testing, and all destructive seam test samples met the required specifications.

The approximate destructive test locations may be located by first referring to the specific destructive test in the Secondary Geomembrane Seam Destructive Log found in PRI 7.7.4.2.1.5 or PRI 7.7.4.2.2.5. From this log, a Repair Number is identified that will be graphically depicted on *Figure 3* and located in PRI 7.15.4.

Destructive samples were cut into three (3) sections as follows:

(a) One (1) section was forwarded to ENVIROTECH'S on-site geosynthetic laboratory for CQA destructive seam testing;

(b) One (1) section was forwarded to the geomembrane installer for QC testing; and

(c) One (1) section was retained as an archive sample. The archive samples were submitted to CHG at project completion.

For CQA destructive seam testing purposes, twelve (12) test coupons were cut from each destructive test sample. Initially, one (1) coupon from either end was tested for shear and peal. In the event both coupons passed, five (5) additional coupons were tested for adhesion (peel test mode) and five (5) coupons were tested for bonded seam strength (shear test mode.) The specified acceptance criteria for destructive tests is summarized in *Table 4*. All destructive tests met the required specifications. A summary of the destructive test results is presented in PRI 7.7.4.1.2.5 or PRI 7.7.4.2.2.5.

Rogers Surveying, Inc., of Kennewick, Washington, conducted an "As-Built" survey of the secondary geomembrane. Utilizing hand-drawn maps and CQA data sheets, CQA generated a CAD file containing the secondary liner survey that is graphically depicted on *Figure 3* and located in PRI 7.15.4. The survey illustrates all secondary seams and locates all secondary repairs and destructive tests.

TABLE 4.
DESTRUCTIVE TEST CRITERIA

WELDING METHOD	PEEL TEST MODE	SHEAR TEST MODE
Extrusion Welding	1. Four (4) of the five (5) test coupons must have a minimum yield strength of 72-lb/in width. 2. Four (4) of the five (5) test coupons per track must not fail in the weld (FTB*)	1. Four (4) of the five (5) test coupons must have a minimum yield strength of 108-lb/in width. 2. Four (4) of the five (5) test coupons must not fail in the weld (FTB*)
Fusion Welding	1. Four (4) of the five (5) test coupons must have a minimum yield strength of 72-lb/in width. 2. Four (4) of the five (5) test coupons per track must not fail in the weld (FTB*)	1. Four (4) of the five (5) test coupons must have a minimum yield strength of 108-lb/in width. 2. Four (4) of the five (5) test coupons must per track must not fail in the weld (FTB*)
*FTB = Film Tear Bond		

3.7.2.7 CQC Testing. In addition, Great Basin Environmental (GBE) provided construction quality control (CQC) services on the geomembrane independent from CQA. GBE also documented the seam, repair and patch information; conducted non-destructive testing; and provided destructive testing services independent from CQA. In addition, CQA and CQC compared results in order verify and ensure the overall quality of the liner system. Both CQC and CQA approved all sections of secondary geomembrane and CQA issued a layer certification on the secondary geomembrane prior to placing any additional layers of geosynthetics. CQC test results are located in DHI Submittal Log 57.

3.8 Leachate Detection System. This section provides a summary of the CQA observations and testing associated with the fabrication, deployment and installation of the leachate detection system in the sumps as well as on the slopes and floors of Cell Nos. 1 and 2.

3.8.1 Leachate Detection System (LDS) Sideslope and Floor Construction Activities. Installation of the leachate detection system (LDS) occurred from August 15, 2005, to October 17, 2005. The components of the LDS on the floor and sideslopes of the cells consisted of secondary (LDS) CDN material nested between the secondary and primary geomembranes. The LDS installation occurred following the CQA layer certificate accepting the secondary geomembrane.

The CDN was installed with the panels parallel to the slope in an orientation similar to the geomembrane panels. The side-to-side CDN seams were secured at 5-ft. intervals with non-metallic ties, as required by the project specifications. The side-to-side CDN seams in the anchor trenches and end-to-end seams were secured at 6-in. intervals. The geotextile was heat-seamed at 5-ft. intervals utilizing a fusion welder with a 3-in. overlap. No end-of-roll seams were located on the landfill slopes.

Any damaged secondary CDN was repaired by removing the damaged area and replacing it with a CDN patch. The geonet was cut, a patch inserted, and joined to the existing geonet at 6-in. intervals with non-metallic ties. A geotextile patch was then welded to the existing CDN utilizing a hand-held fusion welder.

3.8.2 Leachate Detection System (LDS) Sump and Sideslope Riser Construction. The initial step for sump installation entailed GBE placing the secondary GCL over the admix and the secondary HDPE geomembrane over the GCL, as described in Section 3.7.1. GBE then placed a 12-oz. geotextile cushion over the secondary HDPE geomembrane in the sump and weighted the cushion geotextile with sand bags.

While GBE deployed geotextile in the sumps, Morrison welded two (2) runs of six (6) 20-ft sections of 12-in.-dia. SDR 17 LDS pipe and one (1) 18° elbow (LH-047) together north of their respective sumps. Each pipe weld was debeaded immediately following completion of the weld. After QC completed pressure testing the pipes, Morrison welded an additional length of 12-in. HDPE SDR 17 pipe and slotted 12-in.-dia. SDR 17 pipe to each run. Following CQA approval of the underlying geosynthetics on the sideslope and sump, Morrison "walked" the pipes down the slope and over the secondary CDN utilizing two (2) trackhoes. The pipes were placed at the bottom of each sump, up the sideslope riser trenches, through the primary liner, and in the area of the crest pad buildings. The pipes were perforated where they extended across the floor of the sump to 6-ft. north of the south toe, in compliance with the design drawings.

Drainage rock used in the leachate detection system was produced at American Rock Inc., of Richland, Washington, and transported to the site. The drainage rock was transported to the sump area in end-dump trucks and placed into the sump over the LDS pipe utilizing a track excavator. Following drainage gravel placement, DHI hand-graded and compacted the drainage gravel over the LDS pipe to lines and grades to a 2-ft. depth utilizing shovels and a flat-plate compactor.

The 12-oz. cushion geotextile material was folded back over the drainage gravel at the north toe of the sump in the area where the pipe bedding and drainage gravel

met ("sandwiching" the drainage gravel) in order to separate the two different fill types.

Pipe bedding was placed over the sump pipes in the sideslope riser utilizing a trackhoe and hand-compacted with a flat plate compactor. GBE refolded the geotextile cushion back over the drainage gravel, up the slope, and over the pipe bedding. GBE continued installing the LDS CDN over the drain gravel in the sump and spot-welded the cushion geotextile to the secondary CDN.

Rogers Surveying, Inc., of Kennewick, Washington, conducted a CQA "As-Built" survey of the LDS piping and LDS drainage gravel in compliance with the required specifications. Based on this survey, an "As-Built" drawing was prepared and used to determine the drainage gravel thickness and location of the LDS pipe. These documents are located in PRI 7.15.6 and 7.15.8, respectively.

3.8.3 LDS CQA Activities.

3.8.3.1 LDS Geotextile and Composite Drainage Net (CDN) Installation. Prior to deployment of the CDN and cushion geotextile, ENVIROTECH personnel monitored the surface of the secondary geomembrane for wind-blown sand and other foreign objects. In some instances, GBE used leaf blowers and brooms to remove excess wind-blown sand or litter prior to installing the CDN and cushion geotextile materials. CQA monitored the following activities during CDN installation:

- ❒ During excessive wind events, the CDN was weighted down with sand bags.
- ❒ The secondary CDN was kept under tension to minimize wrinkles.
- ❒ Hooked bladed knives were utilized to cut the CDN.
- ❒ The contractor took necessary precautions to prevent damage to the underlying materials.
- ❒ CQA confirmed that the secondary CDN was not welded to the geomembrane.
- ❒ Ensured that the geotextile was not exposed to ultraviolet radiation in excess of fourteen (14) days following deployment.

- ❒ Visual examination of the secondary CDN was conducted by CQA. Any foreign objects, either in or underneath the deployed materials, were removed.

- ❒ CQA issued a layer certification, located in PRI 7.2, that verified that the LDS composite drainage net (CDN) and the LDS cushion geotextile installation met project specifications.

3.8.3.2 LDS Drainage Gravel. Prior to and during drainage gravel placement, ENVIROTECH personnel reviewed all CQC conformance data to verify that it met required project specifications. In compliance with the layer certification documentation, CQA ensured that all underlying geosynthetic layers were completed and accepted, and that no holes, tears, excessive wrinkles, or foreign objects were present. CQA monitored/observed the following activities during construction:

- ❒ Drainage gravel was non-angular and free of material that could damage the underlying materials.

- ❒ The material was distributed during cooler portions of the day. When the temperature increased, CQA informed DHI who voluntarily ceased operations.

- ❒ CQA ensured that an adequate amount of drainage gravel was maintained between the haul trucks and the underlying geosynthetics, as per the technical specifications.

- ❒ CQA visually monitored the gravel thickness during and after placement.

- ❒ CQA visually monitored compaction of the drainage gravel, as per the technical specifications.

- ❒ CQA ensured that DHI personnel monitored distribution of the drainage gravel onto the underlying geosynthetics in order to confirm that no damage or "wrinkles" had occurred. Any developing wrinkle was trapped in the drainage gravel by the DHI personnel in order to halt propagation.

- ❒ CQA confirmed that no damage occurred to the underlying geosynthetics.

- CQA issued a layer certificate, located in PRI 7.2, verifying that the drainage gravel layer met the required specifications.

Rogers Surveying, Inc., of Kennewick, Washington, conducted a CQA survey to confirm thickness, lines, and grades. All survey points shot by Rogers Surveying were within the specified project tolerances (PRI 7.15.6 and 7.15.8, respectively).

3.8.3.3 **LDS Cushion Geotextile.** CQA observed and monitored the following activities during cushion geotextile deployment over the secondary HDPE geomembrane:

- Prior to placing geotextile, CQA ensured that the underlying surface was acceptable and free of deleterious materials.
- The geotextile was anchored in the presence of high winds.
- DHI kept the geotextile under tension to minimize the presence of wrinkles.
- Only hook blades were utilized to cut the geotextile.
- CQA verified that the seam overlap met project specifications.
- No foreign materials were trapped between the seams or under the geotextile.
- Ensured that the geotextile was not exposed to ultraviolet radiation in excess of fourteen (14) days following deployment.
- The geotextile was repaired, as necessary.
- CQA issued a layer certification, located in PRI 7.2, verifying that the cushion geotextile met the required specifications.

3.8.3.4 **LDS HDPE Pipe.** ENVIROTECH personnel reviewed pipe quality control certificates and welder operator certifications to confirm that the materials and construction methods met project specifications. In addition, CQA verified the slot dimensions in the slotted pipe with those outlined in the technical specifications. ENVIROTECH monitored the butt fusion welding of

the HDPE pipe on a procedural basis and ensured that the welds were completed in compliance with the manufacturer's recommendations. CQA observed Morrison removing weld beads from the riser pipes as well as the contractor conducting pressure testing on the LDS pipes and extensions. Prior to and after installation, CQA inspected the pipes for damage, mishandling, and adverse exposure. Following installation activities, CQA witnessed the QC function testing on the pipes that is documented in DHI Submittal 194.

Rogers Surveying, Inc., of Kennewick, Washington, conducted an "As-Built" survey of the pipes to ensure that the placement and orientation of the piping was in accordance with the project specifications and design drawings. "As-Built" shots were taken at the beginning and end of each pipe as well as grade breaks, elbows, and sump extensions. The survey drawings for the LDS piping are located in PRI 7.15.8. CQA confirms that the pipes were constructed and placed in compliance with the required technical specifications.

3.9 Geosynthetic Clay Liner and Primary HDPE Geomembrane Liner System. This section provides a summary of the CQA observations and testing associated with deployment and installation of the primary liner system, including the primary geosynthetic clay liner and the primary geomembrane in Cell Nos. 1 and 2.

3.9.1 Primary Liner Construction Activities. Construction of the primary liner system was initiated on August 18, 2005, and completed on October 25, 2005. Installation of the primary geomembrane liner occurred in a manner similar to that for the secondary liner. GBE conducted the installation and quality control testing of the primary geomembrane liner. Deployment of the geomembrane panels were initiated on the south end of the west slope in Cell No. 2 and proceeded in a manner similar to that in the secondary system to the NE/corner.

The geomembrane liner panels were deployed using hand-labor and a forklift. Prior to deploying geomembrane on the slopes, a rub-sheet was placed between the geomembrane and the secondary CDN. After the primary membrane was deployed, the rub-sheet was removed. The same minimum 5-in. overlap was maintained between adjoining panels when joined by the fusion welding process. A minimum 3-in. overlap was maintained between adjoining panels when joined by the extrusion welding process. The edges of the deployed geomembrane panels were temporarily held in-place with sandbags to prevent movement resulting from wind action.

The geomembrane liner panel seaming process proceeded concurrently with panel deployment activities. The majority of the seams were prepared using a double hot-wedge fusion welder, and repairs were made using an extrusion welder. GBE repaired defects in the primary geomembrane liner resulting from manufacturing defects, testing, environmental factors, and installation processes utilized during installation activities. In addition, GBE conducted quality control testing for all seaming and repairs on the primary geomembrane.

Prior to deploying the primary geomembrane on the floor of the landfill, GBE placed a rub-sheet between the GCL and the CDN from the shoulder of the north slope to the south termination before deploying the GCL on the floor and 3-ft. up the slopes. The GCL was pulled down the north slope and over the secondary CDN. After the GCL was deployed, GBE removed the rub-sheet from between the GCL and CDN. GBE folded back the overlapped edge of the GCL in order to expose the super grove, and a line of bentonite was placed on top of the underlying GCL and the overlying GCL was folded back over so that the super grove lined-up with the line of bentonite on the underlying GCL.

The rub-sheet was redeployed over the CDN on the north slope and the GCL on the floor of the cell. The primary geomembrane was deployed from the north shoulder over the rub-sheet and onto the floor of the cell. After the primary geomembrane was deployed, GBE removed the rub-sheet and fusion-welded the geomembrane panels together. At the end of each day, primary geomembrane covered the GCL deployed that day and GBE sand bagged the leading edge of the primary geomembrane to prevent infiltration of moisture. At no time was the GCL exposed overnight.

The placement of primary GCL and primary geomembrane continued along the north slope to approximately 280-ft. west into Cell No. 1 on the north slope and floor. GBE then went to the west slope and completed primary geomembrane deployment on from the south termination to the NW/corner. GBE continued primary GCL and primary geomembrane placement on the north slope and floor of Cell No. 1 from the west toe of the slope to 60-ft. east on the floor of Cell No. 1. GBE then went to the east leading edge and placed GCL and geomembrane through the Cell No. 1 sump. After returning to the west leading edge, GBE deployed GCL and geomembrane east until the two (2) edges were joined 5-ft. west of the sump.

During a rainfall event, some GCL was damaged when stormwater penetrated the leading edge of the primary geomembrane approximately 100-ft. east of the Cell No. 1 sump. Damaged GCL was repaired by removing the damaged area and replacing it with a patch of GCL. Bentonite was deployed around the edge of the

repair and a patch was cut so that it overlapped the damaged areas for 12-in. in all directions.

Primary geomembrane installation was discontinued periodically due to high wind or rainfall events. During these events, the installed geomembrane was temporarily sealed to prevent rainfall runoff from migrating under the geomembrane liner and damaging the GCL. In the event of high winds, the installed geomembrane edges were heavily anchored with sandbags. In preparation for one event, GBE extrusion-welded the leading edge of the primary geomembrane west of the Cell No. 1 sump to the secondary geomembrane for the entire length of Cell No. 1's floor to prevent stormwater from infiltrating the leading edge of the primary liner.

In compliance with the design drawings, the top of the primary geomembrane extended into the anchor trenches a minimum of 4-ft. Where the primary geomembrane did not continue 2-ft. into the bottom of the anchor trench, extension panels were welded to the primary geomembrane in order to extend the geomembrane in compliance with the design drawings.

The primary geomembrane was extrusion-welded to the secondary geomembrane for the entire length of the south termination according to the design drawings. A rain flap was then extrusion-welded to the primary geomembrane for the length of the floor and 6-ft. up the sideslopes of Cell Nos. 1 and 2. Following installation of the rain flap, DHI and GBE placed protective plywood over the south edge of the liner, in compliance with the design drawings, to complete the south edge liner termination.

3.9.2 Primary Liner CQA Activities.

3.9.2.1 Primary Geosynthetic Clay Liner (GCL). Deployment activities for the primary geosynthetic clay liner occurred in a manner similar to that for the secondary GCL, Section 3.7.2.1. CQA issued a layer certification, located in PRI Index 7.2, verifying that the primary GCL met the required specifications.

3.9.2.2 Primary HDPE Geomembrane Liner Deployment. Deployment activities for the primary geomembrane liner occurred in a manner similar to that for the secondary liner, Section 3.7.2.2. The approximate HDPE geomembrane liner panel layout is graphically depicted on *Figure 4* and in the PRI 7.15.5. CQA issued a layer certification, located in PRI Index 7.2, verifying that the primary geomembrane met the required specifications. A summary of ENVIROTECH personnel's deployment observations is presented in PRI 7.7.4.3.

Final Report – Construction Quality Assurance (CQA)
Integrated Disposal Facility (IDF)
Cell Nos. 1 And 2
Subcontract No. 26693
RPP-RPT-29276, Rev. 0
CH2M Hill Hanford Group
05084-00-25

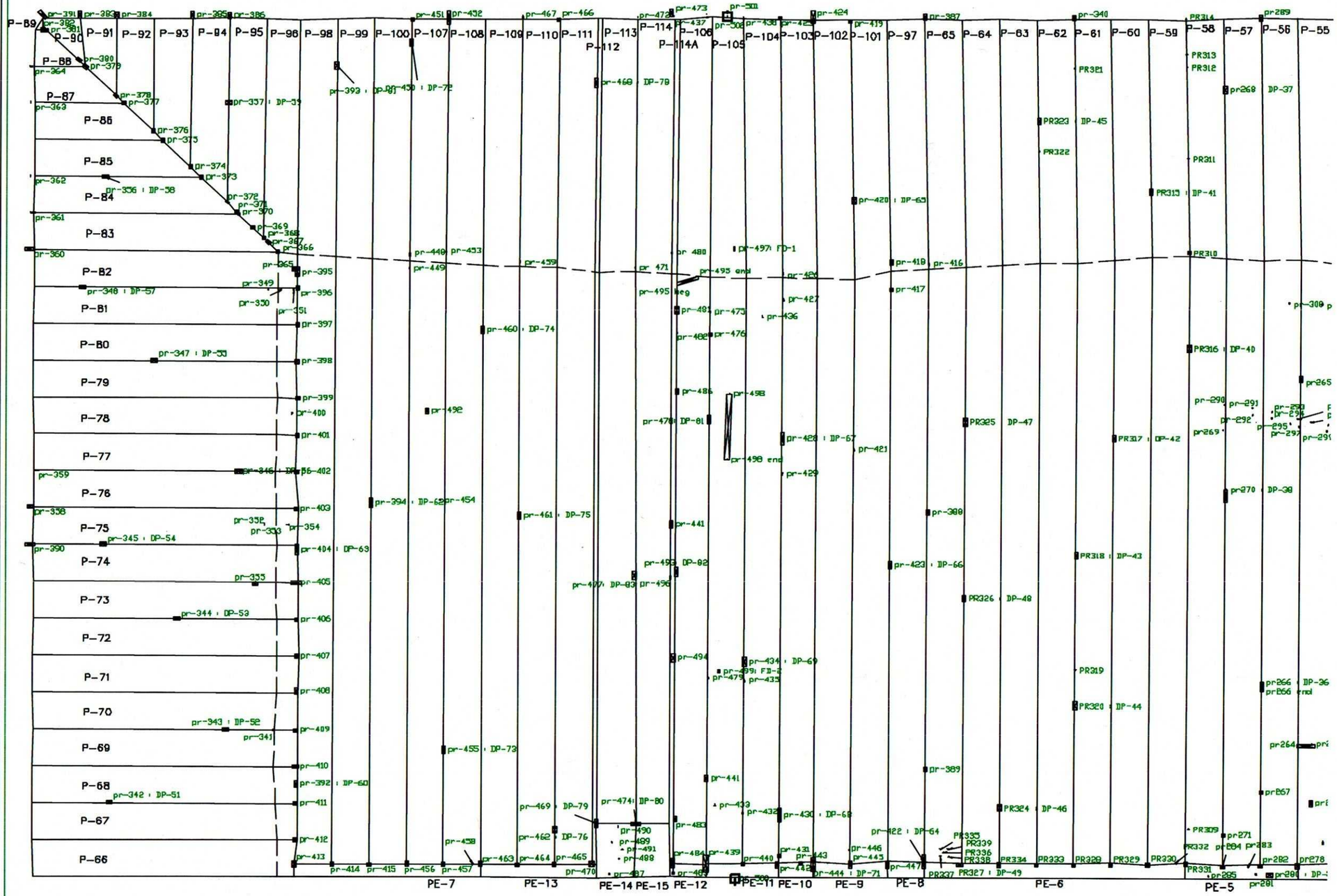

LEGEND

- **P-** Primary Panel Number
- **PE-** Primary Extension Panel
- **PR-** Primary Repair
- **DP-** Primary Destruct Sample
- Toe of Slope
- Patch/Cap
- Bead

N

ENVIROTECH
ENGINEERING & CONSULTING, INC.
2500 North 11th Street - Enid, Oklahoma 73701
Phone (580) 234-5780, Fax (580) 237-4502
C.A. #1960 - Expiration Date: 6-30-2006
www.envirotechconsulting.com

Figure 4
Cell 1 Primary Geomembrane

Date: 1-19-08
Scale: 1:50
Drawn by: John Stovall
Checked By: Joe Voss
Project No. 05084-CH2M HN
CH2M HN Project No. 26693

Final Report – Construction Quality Assurance (CQA)
Integrated Disposal Facility (IDF)
Cell Nos. 1 And 2
Subcontract No. 26693
RPP-RPT-29276, Rev. 0
CH2M Hill Hanford Group
05084-00-25

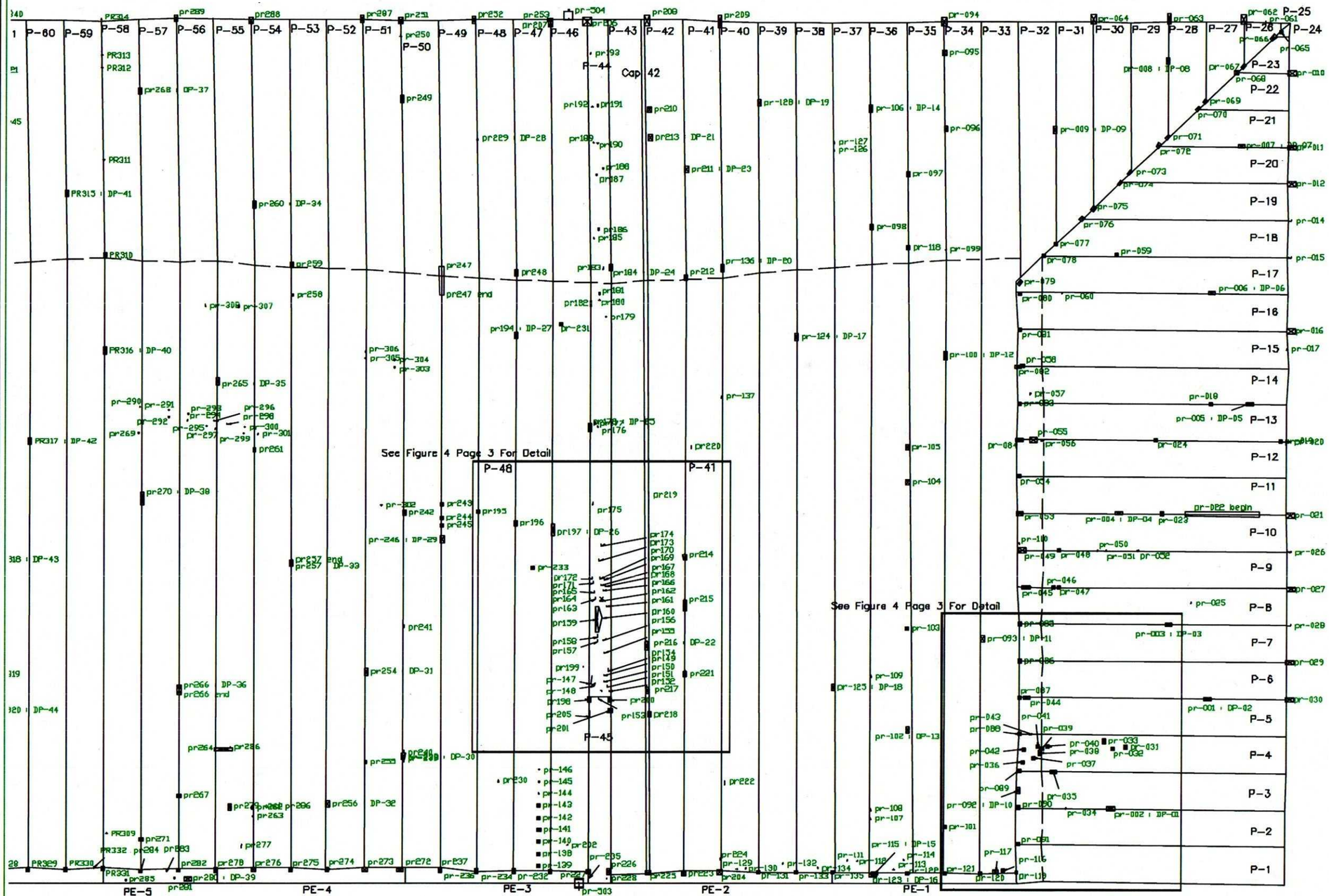

LEGEND

- **P-** Primary Panel Number
- **PE-** Primary Extension Panel
- **PR-** Primary Repair
- **DP-** Primary Destruct Sample
- Toe of Slope
- Patch/Cap
- Bead

N

Figure 4
Cell 2 Primary Geomembrane

ENVIROTECH ENGINEERING & CONSULTING, INC.
2500 North 11th Street, Enid, Oklahoma 73701
Phone (580) 234-6780, Fax (580) 237-4302
C.A. #1960 - Expiration Date: 6-30-2006
www.envirotechconsulting.com

NO.	DATE	REVISION	DRAWN BY	CHECKED BY

Date: 1-19-06
Scale: 1:60
Drawn by: John Stovall
Checked By: Joe Voss
Project No. 05084-CH2M Hill
CH2M Hill Project No. 26693

Page No. 46 Sheet No. 2 of 3

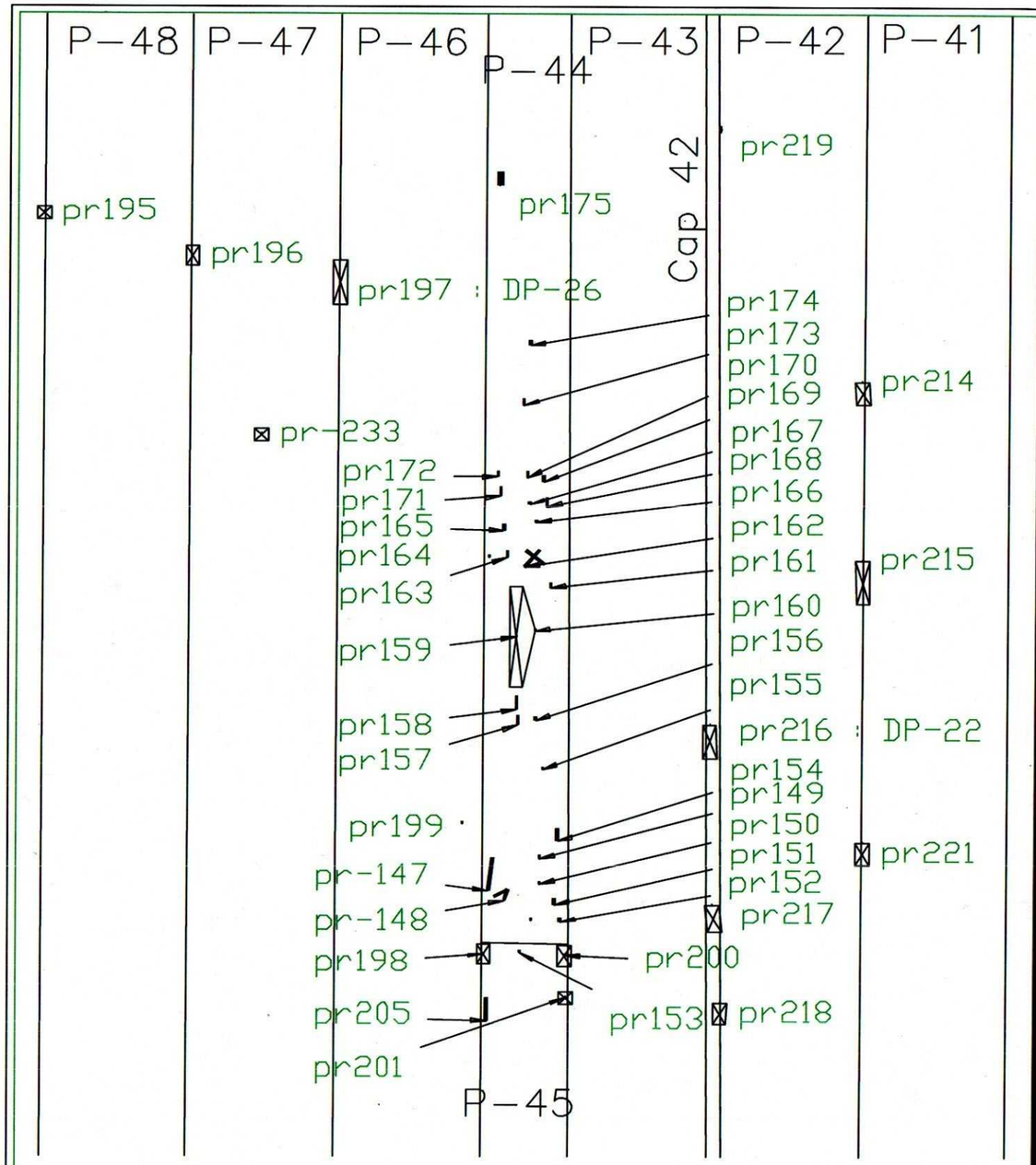

Primary Cell 2 South Termination

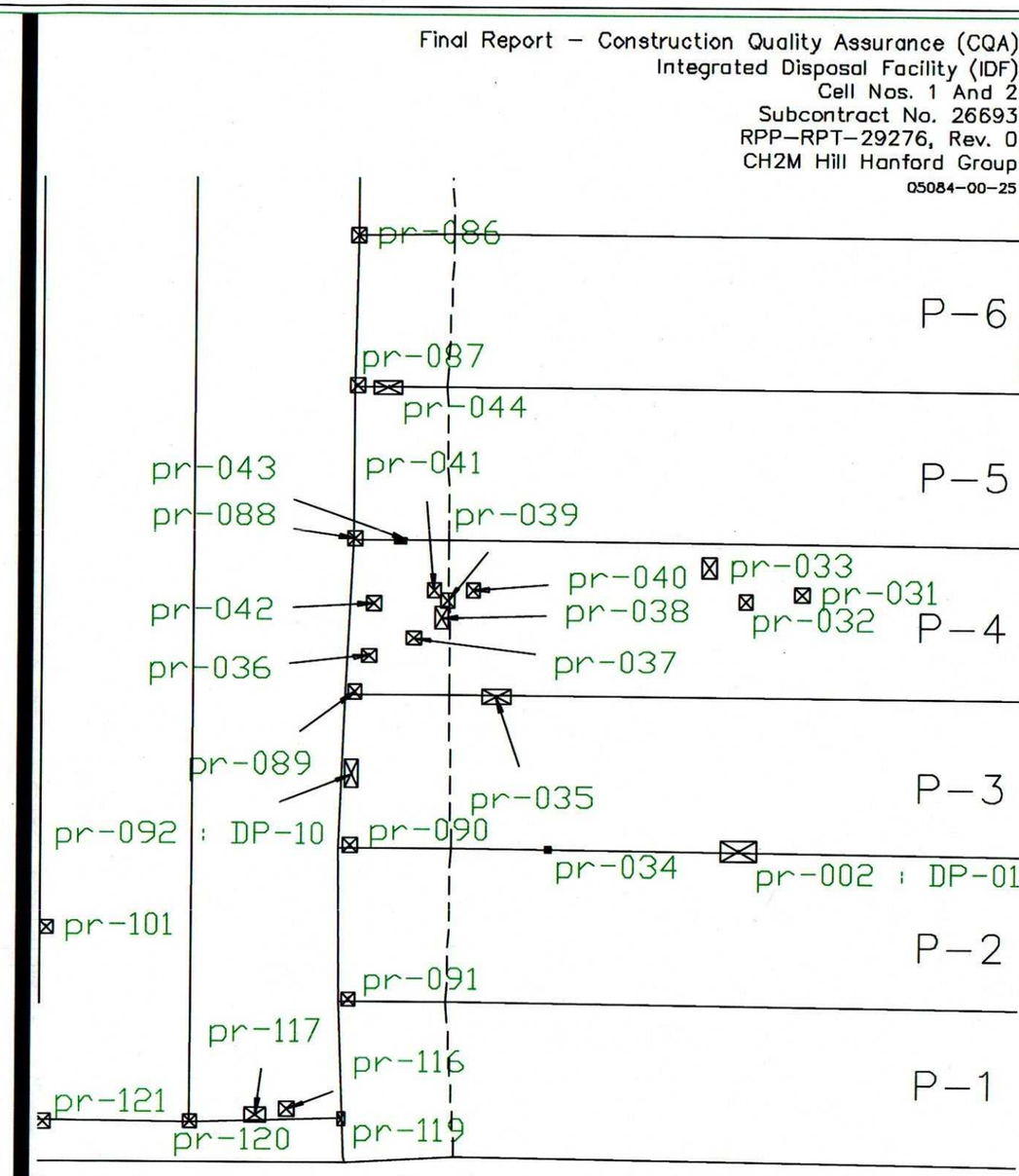

Primary Cell 2 East Slope

Final Report – Construction Quality Assurance (CQA)
Integrated Disposal Facility (IDF)
Cell Nos. 1 And 2
Subcontract No. 26693
RPP-RPT-29276, Rev. 0
CH2M Hill Hanford Group
05084-00-25

ENVIROTECH
ENGINEERING & CONSULTING, INC.

N

Figure 4
Cell 2 Primary
Geomembrane

Date: 1-19-06
Scale: 1:20
Drawn by: John Stewart
Checked By: Joe Voss
Project No. 05084-CH2M Hill
CH2M Hill Project No. 26693

Rogers Surveying, Inc., of Kennewick, Washington, conducted an "As-Built" survey on the primary geomembrane. Utilizing hand-drawn maps and CQA data sheets, CQA generated a CAD file containing the primary liner survey that is graphically depicted on *Figure 4* and located in PRI 7.15.5.

3.9.2.3 Primary HDPE Geomembrane Liner Seaming. Seaming activities for the primary geomembrane liner occurred in a manner similar to that for the secondary liner. Approximately 17,400-lf of seaming was conducted during the installation of the primary geomembrane liner in Cell No. 1 and 17,300-lf in Cell No. 2. A summary of the trial seam results for Cell Nos. 1 and 2 is presented in 7.7.4.3.1.1 and 7.7.4.3.2.1, respectively. A summary of CQA/QC seaming observations is presented in PRI 7.7.4.3.

3.9.2.4 Primary Non-Destructive Seam Continuity Testing. Non-destructive testing activities for the primary geomembrane liner occurred in a manner similar to that for the secondary liner. CQA certifies that all non-destructive tests met project specifications. Documentation summarizing the non-destructive test observations of the seams and repairs for Cell Nos. 1 and 2 are presented in PRI 7.7.4.3.1.3 and 7.7.4.3.2.3, respectively.

3.9.2.5 Primary HDPE Geomembrane Liner Repairs. Repair activities for the primary geomembrane liner occurred in a manner similar to that for the secondary liner. A summary of the defects and repairs for Cell Nos. 1 and 2 is presented in PRI 7.7.4.3.1.4 and 7.7.4.3.2.4, respectively. The approximate defect repair locations are graphically depicted on *Figure 4* and in the PRI Index 7.15.5.

3.9.2.6 Primary Destructive Testing. Destructive testing activities for the primary geomembrane liner occurred in a manner similar to that for the secondary liner. A total of eighty-three (83) initial destructive test samples were collected and tested. The resulting destructive testing frequency was at least one (1) destructive test sample for approximately every 418-lf of welded seam that exceeds the specified frequency of one (1) test per 500-ft. of welded seam.

One (1) initial sample failed destructive testing and the subsequent re-weld of the same seam also failed destructive testing. Following the first failure, GBE chose to reconstruct and reweld the entire seam. After the second failure, the failing primary destructive sample was confined by collecting single bones from the seam at minimum 10-ft. intervals on either side of the

failing test location and testing each sample until two (2) passing retests bound the original test, or until the extent of the welding conducted by the apparatus in question had been exhausted. The seam between the passing tests (or to the extent of welding in question) was capped. The location of the cap was identified as Seam P-105/P-106, as graphically depicted on *Figure 4* and included in PRI 7.15.5. CQA certifies that all destructive tests met project specifications.

3.9.2.7 CQC Testing. In addition, Great Basin Environmental (GBE) provided construction quality control (CQC) services on the geomembrane independent from CQA. GBE also documented the seam, repair, and patch information; conducted non-destructive testing; and provided destructive testing services independent from CQA. In addition, CQA and CQC compared results in order to verify and ensure the overall quality of the liner system. Both CQC and CQA approved all sections of primary geomembrane and CQA issued a layer certification on the primary geomembrane prior to placing any additional layers of geosynthetics. CQC test results are located in DHI Submittal Log 57.

3.10 Leachate Collection and Removal System (LCRS). This section provides a summary of the CQA observations and testing associated with the fabrication, deployment, construction, and installation of the leachate collection and removal system in the sumps as well as on the slopes and floors of Cell Nos. 1 and 2. Below is a summary of the deployment of the primary CDN separation geotextile as well as the construction of the drain gravel filtration layer and installation of the leachate piping.

3.10.1 Leachate Collection and Removal System (LCRS) Construction Activities. Installation of the primary leachate collection and removal system occurred between September 6, 2005, and October 10, 2005. The components of the LCRS consisted of a 12-oz. cushion geotextile, primary LCRS CDN, four (4) LCRS riser pipes, a 12-in. centerline clean-out pipe, and drainage gravel. The LCRS components were generally installed as soon as the underlying material was accepted as complete.

Great Basin Environmental (GBE) deployed the 12-oz. cushion geotextile and primary LCRS CDN; Morrison Construction Services, Inc., installed the LCRS riser pipes; and Del-Hur Industries, Inc., placed the drainage gravel into the landfill.

The 12-oz. geotextile was deployed on the cell floor over the primary geomembrane. GBE utilized a forklift to place the rolls on the south termination and positioned the rolls by hand. The cushion geotextile was deployed with a 6-in. overlap on the edge of the roll seams and with a 12-in. overlap on the end-of-roll seams. The initial

nineteen (19) rolls were spot-welded together and the remaining rolls were placed without anchoring.

The primary CDN was installed with the panel orientation parallel to the slopes in an orientation similar to that for the geomembrane panels. The side-to-side CDN seams were secured at 5-ft. intervals with non-metallic ties, as required by the project specifications. The side-to-side CDN seams in the anchor trenches and end-to-end seams were secured every 6-in. The geotextile was heat-seamed at 5-ft. intervals utilizing a fusion welder with a 3-in. overlap. The LCRS CDN was placed over the slopes and 10-ft. onto the cell floor over the 12-oz. cushion geotextile as per the design drawings. Primary CDN end-of-roll seams on the slopes were staggered so that a panel with an end-of-roll seam on the slope was placed next to a full panel.

Damaged primary CDN was repaired by removing the damaged area and replacing it with a patch of CDN. The geonet patch was joined to the existing geonet at 6-in. intervals with non-metallic ties. The geotextile was welded to the existing CDN utilizing a hand-held fusion welder.

3.10.2 Leachate Collection and Removal System (LCRS) Sump Construction. The initial step for constructing the LCRS sump entailed Morrison welding several runs of HDPE pipes to their respective 18° elbows (north of their associated sump and outside cell limits.) Morrison welded four (4) runs of six (6) 20-ft. sections of 12-in.-dia. HDPE SDR 17 sump pipes (LH-026 and LHCP-27), two (2) runs of six (6) 20-ft. sticks of 18-in.-dia. HDPE SDR 17 high-flow riser pipes (LHCP-025), and two (2) runs of six (6) 20-ft. sections of 3-in. HDPE SRD 17 pipe (LH-048). After each pipe weld was completed, the weld was debeaded in compliance with the required specifications. Following successful QC pressure testing, the pipes were "walked" down the north sideslope with the aid of a CAT excavator and hand labor.

Temporary plywood protection was placed over the cushion geotextile on the floor of the sumps. Morrison proceeded to maneuver the welding machine onto the floor of the sump while constantly maintaining the plywood between the cushion geotextile and the machine. Morrison welded the slotted sump pipes and tees on the floor of the sump as per the design drawings. Morrison welded the 12-in. centerline slotted clean-out pipes together on top of the LCRS drain gravel and maneuvered the pipe onto the cell floor at a 1% slope with the aid of a CAT excavator. Additional plywood was placed under the connection and the 12-in. centerline clean-out riser pipe was welded to the sump tee on the floor of the cell.

3.10.3 LCRS Drainage Gravel Placement. Drainage gravel was obtained in a manner similar to that described in Section 3.8 - Leachate Detection System. After the

cushion geotextile and CDN were in-place, Del-Hur began transporting drainage gravel to the floor of the landfill. DHI constructed temporary 3-ft.-high minimum drainage gravel roads in the cells in order to protect the underlying geosynthetics and facilitate placement of the drainage gravel with Pay Haulers. After Del-Hur completed transporting the drainage gravel to the cell floor, the gravel was graded to a 1-ft. thickness utilizing a GPS D6 low-ground-pressure (LGP) dozer and compacted by completing two (2) passes with the dozer.

Del-Hur placed drainage gravel in the cell centerline drainage pipe cover and in the drainage gravel riser berm with a CAT excavator. Gravel was hand-tamped around the pipes in 9-in.-lifts. Del-Hur then placed 6-in.-thick lifts to design grade where the drainage gravel was compacted utilizing a flat-plate compactor.

Rogers Surveying, Inc., of Kennewick, Washington, conducted a CQA "As-Built" survey following completion of placement and finish grading of the drainage rock. Utilizing the underlying admix survey, CQA determined the thickness of the LRCS drainage gravel layer. A review of the drainage gravel survey, located in PRI 7.15.6, indicated that the drainage gravel thickness met the project specifications of 1-ft. on the cell floor and 1-ft. over the LCRS pipes for a minimum of 3-ft. on either side of the pipes.

3.10.4 LCRS CQA Activities.

3.10.4.1 LCRS Cushion Geotextile. CQA observed and monitored the following activities during cushion geotextile placement over the HDPE Primary Geomembrane.

- ❒ Prior to placing the geotextile material, CQA ensured that the underlying surface was acceptable and free of deleterious materials.
- ❒ In the event of high winds, the geotextile was anchored.
- ❒ DHI kept the geotextile under tension to minimize the potential for wrinkles.
- ❒ Only hook blades were utilized to cut the geotextile.
- ❒ CQA verified that the seam overlap met project specifications.
- ❒ CQA verified that no foreign materials were trapped between the seams or under the geotextile.

- ❒ Ensured that the geotextile was not exposed to ultraviolet radiation in excess of fourteen (14) days following deployment.
- ❒ Repairs to the geotextile were made, as necessary.
- ❒ CQA issued a layer certification, located in PRI Index 7.2, verifying that the cushion geotextile met the required specifications.

3.10.4.2 *LCRS Composite Drainage Net (CDN).* *CQA activities associated with the* CDN on the sideslopes over the primary geomembrane were similar to those described in *Section 3.8.2.1*. CQA issued a layer certification, located in PRI Index 7.2, verifying that the primary CDN met the required specifications.

3.10.4.3 LCRS Drainage Gravel. CQA activities associated with the primary drainage gravel in the sump were similar to those described in *Section 3.8.2.2*. CQA issued a layer certification, located in PRI Index 7.2, verifying that the drainage gravel met the required specifications.

3.10.4.4 LCRS HDPE Pipe. CQA activities associated with the primary HDPE pipe were similar to those described in *Section 3.8.2.4*. Roger's surveying verified that the 12-in. centerline clean-out pipe was placed at a minimum 1% slope. CQA monitored CQC testing of the LCRS HDPE pipes and the test results are located in the Del Hur Submittal 194. CQA issued a layer certification, located in PRI 7.2, verifying that the HDPE pipe was placed in compliance with the required specifications located in PRI 7.2.

3.11 Liner System Summary. Liner system construction (soil and geosynthetic) was commenced on June 22, 2005, and completed on October 25, 2005. The system consists of a secondary 60-mil. HDPE geomembrane with a synergistic 3-ft. bentonite-soil (admix) liner and a primary 60-mil. HDPE liner with a synergistic geosynthetic clay layer. CQA certifies that the primary and secondary liner systems were constructed according to project specifications and design drawings. CQA documented that each layer met project specifications and certified each layer in the Layer Certifications, PRI Index 7.2.

4. PROTECTIVE OPERATIONS LAYER

4.1 Introduction. This section provides a summary of the CQA observations and testing associated with the construction and placement of the operations layer for Cell Nos. 1 and 2.

ENVIROTECH personnel monitored these activities from September 13, 2005 to December 1, 2005. The operations layer inside the cell consisted of a separation geotextile to prevent operations soil from entering the LCRS, cover soil, and gravel roads for operational access into the cell. The protective operations layer outside the cell boundaries included the shine berm and backfill at the south termination.

4.2 Scope of Work. The CQA scope of work extended to the following items:

- ❒ Monitor deployment of the separation geotextile.
- ❒ Observe placement of the operations layer including lift thickness and compaction methods.
- ❒ Conduct pre-construction testing of operations layer within cell limits and pre- and post-construction testing of the operations layer outside the cell limits including the shine berm and south termination.
- ❒ Complete a final survey verifying operations thickness as well as lines and grades inside and outside cell limits.
- ❒ The CQA scope of work did not extend to operational access roads inside the cell, cell access road, or any other road or berm on-site.

4.3 Construction Activities.

4.3.1 Inside Cell Limits. Great Basin Environmental (GBE) deployed the 6-oz. separation geotextile while all other work associated with construction of the operations layer for Cell Nos. 1 and 2 was conducted by Del-Hur.

The separation geotextile was deployed in a manner similar to that for the cushion geotextile. After the drainage gravel was approved, GBE deployed the separation geotextile over the drainage gravel. GBE maintained a 6-in. overlap on the edge of roll seams with a 12-in. overlap on end-of-roll seams. GBE placed the geotextile without anchoring the panel. Del-Hur anchored the separation geotextile after GBE completed deployment with shovel loads of operations material. While operations material was being placed over separation geotextile, a spotter was present to ensure that overlaps were maintained and no operations material slipped between the overlaps.

The operations layer material consisted of native soils collected from the mass excavation of the cells. Approximately 115,500-cy (compacted) of operations layer

material was utilized during construction of Cell Nos. 1 and 2. The material was collected from both the operation material stockpiled during excavation and additional operations soil material specifically left in-place for use in the operations layer south of the south termination.

The operations material was placed by first constructing a minimum 2-ft.-high operations road providing a minimum 3-ft. high protective cover over the underlying geosynthetics into the cell to allow access for the DHI Pay Haulers. Either an excavator or front-end loader was utilized to excavate operations soil. Pay Haulers moved and placed the soil into the cell where the soil was spread by a GPS D6 LGP. The soil was spread in 1-ft.-thick lifts and track-walked with the D6 LGP dozer completing two (2) passes. The soil was set to grade utilizing a D6 LGP dozer with the assistance of the CQC surveyor.

Rogers Surveying, Inc., of Kennewick, Washington, conducted an "As-Built" survey after completion of the placement, compaction, and finishing of the operations soil. From the previous drainage gravel survey, an "As-Built" point drawing was prepared and used to determine the actual point elevations for the operations layer. The "As-Built" drawing indicated that the soil liner material met the minimum 3-ft.-thickness and the design grades and lines. The "As-Built" point drawing is included in PRI 7.15.7.

4.3.2 Outside Cell Limits. The protective operations layer outside the cell limits consisted of the shine berm and fill on the south termination. Approximately 4,600-cy of compacted operations soil was used to construct the shine berm and an additional 2,250–cy of backfill was used on the south termination trench.

4.3.2.1 Shine Berm. The majority of the shine berm material was the result of excess operations soil from slope trimmings. The D6 dozer graded the excess operations soil up the slopes and deposited the trimmings on the shine berm. Some operations material was transported directly from the operations stockpile in Pay Haulers. After placing the material, DHI utilized a D6 dozer to track-walk and set the operations material to grade. A smooth-drum roller was utilized to compact the shine berm to 95% Standard Proctor density (ASTM D698.) Following shine berm compaction activities, DHI utilized a trackhoe and road grader to grade the top and sideslopes prior to installing erosion matting on the outside sideslope in accordance with the design drawings.

4.3.2.2 South Termination. DHI placed backfill in the south termination trench and at the toe of the south slope to bring the operations material to grade.

DHI utilized a trackhoe equipped with a vibratory plate compactor to place and compact the operations material near the liner. After the operations soil at the south termination was built-up, DHI utilized a dozer and a smooth-drum roller to complete placement and compaction of the operations soil.

DHI excavated the south termination in order to install the excavation infiltration basin and catch basin in accordance with the design drawings. Following completion of the excavation activities, DHI placed and backfilled the catch basin. The operations soil was compacted utilizing a vibratory plate compactor attached to a trackhoe to 95% Standard Proctor density. DHI "loosened" and tilled the foundation in the excavation infiltration basin as outlined in the design drawings. The excess soil resulting from excavation activities was transported out of the cell in Pay Hauler trucks.

Rogers Surveying, Inc., of Kennewick, Washington, conducted an "As-Built" survey after completion of the placement, compaction, and finishing of the operations soil. The "As-Built" drawing indicated that the operations material met the design grades and lines and is included in PRI 7.15.7.

4.4 CQA Activities.

4.4.1 Separation Geotextile Deployment. The separation geotextile was deployed in a manner similar to that of the cushion geotextile outlined in *Section 3.10.2.1*. CQA monitored and observed the following items during deployment activities:

- ❒ *Prior to geotextile deployment, CQA ensured that the underlying surface was* acceptable free of deleterious materials.
- ❒ In the event of high winds, the geotextile was anchored.
- ❒ DHI kept the geotextile under tension to minimize the potential for wrinkles.
- ❒ Only hook blades were utilized to cut the geotextile.
- ❒ CQA verified that the seam overlap met project specifications.
- ❒ No foreign materials were trapped between the seams or under the geotextile.

- The geotextile was not exposed to ultraviolet radiation in excess of fourteen (14) days following deployment.
- Repairs were made to the geotextile, as necessary.
- CQA issued a layer certification that the separation geotextile was installed in compliance with the required specifications and is located in PRI Index 7.2.

4.4.2 **Operations Layer - Inside Cell Limits.** Prior to operations layer deployment, CQA verified and certified, in writing, that the underlying geosynthetics were free of holes, tears, excessive wrinkles, or foreign objects. CQA monitored, observed, and documented the following items during deployment activities:

- The soil was suitable and satisfied the technical specification and Cell No. 1 CQA Plan Table 2.7 requirements.
- The operations soil was placed in accordance with the technical specifications and construction drawings.
- The lift thickness and total thickness of the operations layer met the requirements outlined on the construction drawings.
- Separation geotextile wrinkles were trapped or removed prior to placing the operations soil.
- The operations soil was placed in such a way as not to damage the underlying geosynthetic layers.
- Spreading activities, hauling equipment, and operations were in compliance with material thickness and operations requirements outlined in the technical specifications.
- No operations soil was placed or compacted during periods of adverse weather conditions.

Laboratory analyses of the operations layer material were conducted in ENVIROTECH'S on-site laboratory. The type and frequency of the operations layer pre-construction testing is summarized in *Table 5*, and the laboratory analytical results are included in PRI 7.3.3.1 and 7.3.3.2. The thickness of the operations soil was confirmed by Rogers Surveying, Inc., of Kennewick, Washington, who conducted an "As-Built" survey. CQA calculated the operations layer thickness by comparing the drainage

gravel survey on the floor and admix survey on the sideslopes with the top of the operations layer survey. CQA confirmed that the operations layer met the requirements set forth in the construction specifications.

4.4.3 Operations Layer - Outside Cell Limits. Operations soil outside of the cell limits was placed on accepted foundation south of the cell. As such, CQA verified that the underlying foundation was acceptable, free of deleterious materials, and compacted to 95% Standard Proctor density (ASTM D698) in lieu of verifying the underlying geosynthetics. CQA verified that the materials met the technical specifications and frequencies outlined in Cell No. 1 CQA Plan Table 2.7. In addition, CQA confirmed that the operations soil outside the cell limits was compacted to 95% Standard Proctor density (ASTM D698). The types of tests conducted and associated frequencies on the operations layer outside the cell limits are summarized in *Table 5*. Material analytical results are located in PRI 7.3.3.1 and 7.3.3.2, and field testing results are located in PRI 7.3.3.3.1.

TABLE 5.

TYPE AND FREQUENCY OF OPERATIONS LAYER MATERIAL TESTING

PHASE	TEST	REQUIRED FREQUENCY	TESTS REQUIRED	TESTS PERFORMED	ACTUAL FREQUENCY
Pre-Construction	Grain-Size Distribution (ASTM D422)	1/10,000-yd^3	13	13	1/9,416-yd.^{3}
	Standard Proctor (ASTM D698)	1/20,000-yd^3	13	13	1/9,416-yd.^{3}
Construction (Outside Edge of Liner)	Field Moisture-Density (Nuclear, ASTM D2922)	1/5,000-ft.^{2}/lift	40	48	1/4,242-ft.^{2}
	Shine Berm Field Moisture-Density (Nuclear, ASTM D2922	1/5,000-yd^3	98	106	1/4,623-yd.^{3}
	Visual Observation	Periodic	Periodic	Periodic	Periodic

4.4.4 Operations Layer - Shine Berm. ENVIROTECH personnel conducted CQA testing on the shine berm comprised of operations soil outside the cell limits. The testing was conducted identical to that described in *Section 4.4.3*. The

types of tests conducted and associated frequencies on the operations layer outside the cell limits are summarized in *Table 5*. Material analytical results are located in PRI 7.3.3.1 and 7.3.3.2, and field testing results are located in PRI 7.3.3.3.2.

5. DOCUMENTATION

5.1 **Daily Reports.** Daily reports were prepared from field books maintained by each member of the on-site CQA staff for work conducted on the IDF site to include the following:

- ❒ Reference to field books utilized that day by CQA staff;
- ❒ Meteorological information;
- ❒ A summary of the day's activity;
- ❒ Highlights of unresolved issues, if any; and
- ❒ Test equipment calibrations.

A compilation of ENVIROTECH'S and the CHI's Daily Reports are located in PRI 7.11.

5.2 **Inspection Data Sheets.** All observed field and laboratory test data was recorded on inspection data sheets. Summary tables and the individual data sheets are located in PRI 7.0.

5.3 **Non-Conformance Reporting.** No CQA non-conformance reports (NCRs) were issued on this project. Contractor NCRs are included in the Del Hur Submittal Log #14.

5.4 **Design Changes and Clarifications.** Field Change Notices (FCN), Engineering Change Notices (ECN), and Requests for Information (RFI) were utilized during the project when clarification was required. ENVIROTECH RFIs are included PRI 8.10; project ECN and FCN are located in the IDF-Schedule B Project Records Index 8.4 (IDF-B PRI); and project RFI are located in IDF-B PRI 8.10.

5.5 **Progress Reports.** Weekly CQA Progress Reports were prepared to summarize project activities conducted by CQA. In addition, the reports provided a summary of the construction activity and associated problems. All CQA Progress Reports are included in PRI 1.6.

5.6 Photograph Log. Daily photographs were taken to provide photo documentation of the work-in-progress, issues identified by CQA as requiring special notice, and other items of interest. This log is included in PRI 1.8.

5.7 HDPE Geomembrane Tracking Log. A set of five (5) logs utilized during installation of the primary, secondary, and tertiary geomembrane liners including: the trial seam log, panel placement log, seam tracking log, repair log, and destruct sample log. These logs are located in PRI 7.7.4.

5.8 Geosynthetic Tracking Log. A log tracking roll numbers and installation information of the CDN, geotextile, and GCL are located in PRI 7.5, 7.6, and 7.9.

6. CONCLUSIONS

The activities described in this document are associated with the construction of the landfill liner system for Cell Nos. 1 and 2 of the Integrated Disposal Facility (IDF) located in the 200 East area of the Department of Energy's Hanford Nuclear Reservation near Richland, Washington. As required by the WAC-173-303-335, the CQA program for the IDF landfill liner construction included the foundation, low-permeability soil admix liner, primary and secondary geomembrane liners, the leachate collection and removal systems, and leak detection system. ENVIROTECH ENGINEERING & CONSULTING, INC.'S personnel observed, inspected, sampled, tested, and documented all activities associated with landfill liner system construction and found the completed construction in compliance with the requirements of the Cell Nos. 1 and 2 CQA Plans. Based on the CQA activities described within this report and the results of testing conducted, ENVIROTECH certified that the above-referenced facility has been constructed in compliance with the design drawings and project specifications, including the Design Change Notices and Requests for Information documented in this report.

ATTACHMENT EEC-1

RESUMES

ROBERT L. STALLINGS, P.E.

President and Principal Engineer

Years Employed by Firm: 12

Total Professional Experience: 30

Education

B.S., Mechanical Engineering. Auburn University, 1974

Professional Registrations

Professional Engineer: Alabama, Arkansas, Colorado, Florida, Georgia, Kansas, Kentucky, North Carolina, Oklahoma, South Carolina, Texas, Washington

Relevant Experience

Mr. Stallings, principal engineer and owner, has served as a practicing engineer for the past 20 years. Stallings has accumulated a broad range of expertise in the areas of energy, environmental, and engineering projects throughout the continental United States.

Stallings' extensive project experience includes solid and hazardous waste landfill design and construction; stormwater management system design; domestic and industrial wastewater collection and treatment system design; street and roadway design; site design for industrial, commercial, agricultural, and residential developments; preparation of drainage, landscaping, and utility improvement plans; and permitting and environmental regulatory compliance for a multitude of state and federal regulatory programs including OSHA, EPCRA, RCRA, NPDES, SDWA, CWA, FIFRA, CAA, NEPA, and others. Stallings has also gained applied expertise in the areas of feasibility studies, pollution assessments, geophysical surveying, remediation system design, underground storage tank investigations, and risk assessments. He is principally responsible for all of the firm's field services which include construction inspection, subsurface drilling, field and laboratory testing, environmental monitoring, surveying, and geophysics.

Distinguishing Qualifications

- Principal engineer for site investigaiton, assessment, and closure plan preparation for a commercial swine facility with ammonia and nitrate contamination. Preparation/ implementation of a remedial plan and coordination with various regulatory agencies.

- Served as principal-in-charge for the CQA/QC team during liner repairs at Cell 13, closure of Cell 14, and expansion of Cell 15 at the Lone Mountain Facility.
- Provided technical assistance for landfill design in Bac Gaing and Hai Duong provinces in the Republic of Viet Nam.
- Project Engineer for a comprehensive analysis of the surface and groundwater hydrology of the Enid Municipal Landfill.
- Aided in the design of two total retention surface impoundments, incorporating a liner system, for the evaporation of an industrial facility's wastewater.
- Designed several domestic/industrial wastewater collection/treatment systems.
- Designed floodplain management and FEMA map revisions.
- Developed construction specifications for multiple facilities.
- Ensured regulatory compliance and permitting for multiple facilities.
- Prepared Environmental Master Plans for facilities throughout the U.S.
- Performed Environmental Site Assessments, pursuant to ASTM standards, for multiple facilities, including golf facilities, throughout the U.S.
- Performed Environmental/OSHA facility audits throughout the U.S.
- Developed groundwater and surface water sampling protocols.
- Designed aboveground and underground storage tank facilities.
- Performed electromagnetic surveys for pollution delineation.
- Performed soils investigations and geological analyses at multiple sites.
- Conducted numerous underground storage tank investigations.
- Developed comprehensive, multi-phased contaminant remediation plans for properties located throughout the United States.
- Prepared Spill Prevention Control and Countermeasures (SPCC) Plans for multiple oil and gas lease sites throughout Oklahoma.

Representative Projects

- **Construction Quality Assurance (CQA) for Cell Construction at Bechtel-Hanford's Hazardous Waste Disposal Facility in Richland, Washington.** Envirotech was awarded a contract to provide Construction Quality Assurance for Cells 5 and 6 at a Department of Energy (DOE) Environmental Restoration Disposal Facility in Richland, Washington. This project commenced in August 2003.

  The Environmental Restoration Disposal Facility (ERDF) is a large CERCLA disposal facility that receives radioactive and chemically-contaminated wastes from the Hanford Site. The facility consisted of four (4) disposal cells that are currently being expanded to six (6) cells. Each cell is approximately 500-ft. x 500-ft. at the base and 70-ft.-deep. At the surface, each pair of cells is approximately 710-ft. x 1,420-ft. The construction project consists of excavating Cell Nos. 5 and 6, installing an admix-geomembrane triple liner, double-leachate system and tying the leachate collection system to existing leachate piping.

Envirotech furnishes all labor, technical and professional services, supervision, material, supplies, equipment, and facilities necessary for performance of CQA services in support of construction of ERDF Cell Nos. 5 and 6. Inspection, testing, and certification is required for all aspects of construction to include excavation, soil classification, fill placement, construction of soil liner test fill, soil liner placement, construction of anchor trenches and sideslope riser trenches, geosynthetic installation, installation of components for leachate collection system, and placement of gravel/operations layers. Envirotech follows the requirements of an Owner-supplied CQA Plan.

At completion of the project, Envirotech shall certify (by a professional engineer registered in the State of Washington) that Cell Nos. 5 and 6 and associated construction have been constructed in accordance with the CQA plan, drawings, and specifications.

In addition to various progress and status meetings specified in the CQA Plan, Envirotech attends supplemental meetings with the DOE, regulatory agencies, or project personnel.

Inspection activities described in the CQA Plan include soil testing and classification; geotechnical testing; installation and performance of a double-ring infiltration (SDRI) testing device; soil and admix placement; and geomembrane and geosynthetic raw materials, manufacturing, fabrication, transportation, handling, and storage.

- **CQC for Closure of RCRA Cell 14, Lone Mountain Facility.** Stallings served as the principal-in-charge during the provision of CQC services for the closure of hazardous waste Cell 14 and expansion of Cell 15 at Clean Harbors (formerly Safety-Kleen) Lone Mountain Facility in Waynoka, Oklahoma. Services included project design and specifications review; ensuring compliance with the QA Plan; on-site soils and materials testing; observation and documentation (written and photo) of construction activities; and submittal of certified closure reports to the required State and Federal agencies. Envirotech staffed two (2) 8-hr. shifts to this project and was prepared to staff a third shift upon notice from the client to work 24-hour days.

- **CQA and Certification for Final Closure Cap of Cell 13, Lone Mountain Facility.** Stallings served as the principal-in-charge during the provision of CQA and certification services during the deployment of the final closure cap at hazardous waste Cell 13 at Clean Harbors (formerly Safety-Kleen) Lone Mountain Facility in Waynoka, Oklahoma. The closure of RCRA Landfill Cell No. 13 included placement of unclassified material over the existing waste to provide for pre-cap lines and grades. Final closure cap construction included placement of a geosynthetic clay liner (GCL); deployment of a high-density polyethylene (HDPE) textured geomembrane, geonet, and geotextile; and placement of a soil protective cover and rip-rap.

Envirotech mobilized their soils laboratory on-site and utilized sandcone testing equipment and a Troxler Model 3430 Nuclear Density Gauge for field compaction density testing activities. A final closure report was prepared in accordance with the guidelines established by the Environmental Protection Agency (EPA) and Oklahoma Department of Environmental Quality (ODEQ). Envirotech was familiar with the landfill's design, permitting restrictions, operational history, and legal compliance requirements.

- **CQA for Expansion of Enid Municipal Landfill.** Stallings served as the principal-in-charge during the provision of CQA services for the upgrade of subcells 8D and 9E at the Enid, Oklahoma municipal landfill. Stallings also provide CQA services during the landfill's 1996 upgrade project. Envirotech provided Construction Quality Assurance (CQA) in conjunction with upgrading the municipal landfill by constructing 3-acres of bottom and sideslope liner in Subcells 8D and 9E. Envirotech reviewed and approved the plans and technical specifications for the liners in-house, and City personnel constructed a clay liner, leachate collection system, drainage layer, and protective layer. A private contractor installed the geomembrane and geotextile materials. The scope of work performed by Envirotech staff reviewed project design/specifications to ensure compliance with the City's QA/QC plan; documented CQA inspection/testing activities, and supervised procedures conducted prior to liner installation ;performed tests on the liners to ensure liner and protective layer reliability; mapped/documented all testing points in the liner; prepared daily reports; prepared "As-Built" map of the graded clay liner surface; and prepared a final report for submittal to the City of Enid and the Oklahoma Department of Environmental Quality (ODEQ).

- **Geotechnical and Liner QA Services, Multiple CAFOS, Northwestern OK.** Stallings served as the principal-in-charge during the provision of geotechnical and liner quality assurance services during the development of confined animal feeding operations (CAFOS) throughout Oklahoma. Envirotech was retained to prepare and submit a package to include conducting the geotechnical investigations, collecting and analyzing soil samples, and provide construction management services for the development of CAFO sites in Oklahoma and Texas. In addition, Envirotech provided drilling services as well as soil sample collection and laboratory analysis activities. In addition, Envirotech provided a full-time, on-site resident civil engineering technician to oversee the project, prepare daily construction reports, and serve as liaison between the client and contractor. Envirotech met and maintained compliance with the rules and regulations set forth by the Oklahoma Department of Agriculture and USEPA, Region 6.

- **Environmental Technical Assistance for Landfill Design, Vietnam.** Stallings provided technical assistance related to landfill design and placement to the Bac Gaing and Hai Duong provinces in the Republic of Vietnam. Envirotech was retained to assist the people in the Republic of Vietnam with the development of solid waste landfills. The work included conducting seminars for engineers and managers at the local government level in solid waste

landfill technology. These seminars served to educate these individuals in the techniques and methodologies available for developing affordable, safe, and environmentally-friendly landfills. The presentation detailed the two (2) major types of landfills (containment and natural attenuation) and detailed the four (4) basic steps for developing a solid waste landfill (i.e., site selection process, landfill design, landfill construction, and operations.) Conducted on-site visits and prepared feasibility studies for the Provinces of Bac Gaing and Hai Duong. It was concluded that solid waste landfills could be designed and constructed for these two (2) provinces utilizing a .5-m clay liner and would include a leachate collection system.

- **Assessment, Remediation Design and Implementation, Cimarron Pork.** Stallings served as the principal engineer during an extension site assessment and design of a remediation system for a former CAFO with ammonia and nitrate contamination. Following an extensive site investigation and preparation of a closure plan, Envirotech designed a remediation plan for a commercial swine facility in Logan County, Oklahoma, that has ammonia and nitrate contamination. ENVIROTECH prepared the complete remedial design, including plans and specifications, implementation schedules, feasibility studies, cost estimates, and health/safety assessments. The remediation plan was approved by the EPA, ODA, and Attorney General's Office, and implemented in the summer 2002.

JOE VOSS, EIT

CQC/QA Engineer

Years Employed by Firm: 4

Total Professional Experience: 6

Education

M.S., Environmental Engineering, Oklahoma State University, 2003
B.S., Chemical Engineering, Oklahoma State University, 1998

Professional Registrations

Engineer-in-Training: Oklahoma
American Concrete Institute Certification
Troxler Certification for Nuclear Testing Equipment

Relevant Experience

Joe Voss, EIT, serves as the primary CQC/QA engineer and on-site safety and health officer for Envirotech. Voss has extensive experience in quality assurance and quality control inspection and testing for both Subtitle D and C as well as nuclear sites. Voss holds an active Troxler Certification for nuclear testing equipment and is ACI certified. He has acquired extensive experience in the following laboratory testing procedures: Atterberg Limits (D4318); California Bearing Ratio (D1883); Coarse Material Sieve (C136); Concrete Slump Test; Concrete Cylinder Breakage; Density, Drive-Cylinder (D2937); Field Density Testing (D2922, D3017); Flexible Wall Permeability; Grain Size Analysis—Hydrometer (D422); Grain Size Analysis—Sieve Only (D422); Modified Proctor (D1557); Moisture Content (D2216); *Oversize Correction (D4718); Percent Passing #200 Sieve (D1140); Porosity; Soil* Classification (USCS);p Specific Gravity (D854); Standard Penetration Testing; and Standard Proctor (D698)

Distinguishing Qualifications

- Currently providing on-site Construction Quality Assurance (CQA) for Cells 5 and 6 construction at Bechtel-Hanford's Hazardous Waste Disposal Facility in Richland, Washington.
- Served as the CQC engineer and on-site safety and health officer during the provision of CQC services for the closure of hazardous waste Cell 14 and expansion of Cell 15 at Clean Harbors' (formerly Safety-Kleen) Lone Mountain Facility.

- Served as the CQC/QA engineer and provided daily inspection and testing services during the construction of the $18.9-million Colvin Center expansion at Oklahoma State University. The project included renovating 80,000-sf of the existing facility and construction of a 50,000-sf addition.
- Served as the project engineer during an extensive geotechnical investigation and structural analysis of the Oakwood Mall in Enid, Oklahoma. The facility was suffering from visible signs of structural fatigue including both interior and exterior damage..
- Served served as the project engineer during a geotechnical and foundation investigation for the construction of large water holding tanks associated with a large commercial facility in Northwestern Oklahoma..
- Serves as a member of the team providing on-call environmental and sampling support for Clean Harbor's Lone Mountain hazardous waste facility. Voss also serves as the on-site safety and health officer for Envirotech during projects at the facility.
- Served as the project engineer for a geotechnical investigations of proposed CAFO development sites in Texas. The project involved substantial drilling and laboratory testing services for each proposed evaporative lagoon site.

Representative Projects

- **Construction Quality Assurance (CQA) for Cell Construction at Bechtel-Hanford's Hazardous Waste Disposal Facility in Richland, Washington.** Envirotech was awarded a contract to provide Construction Quality Assurance for Cells 5 and 6 at a Department of Energy (DOE) Environmental Restoration Disposal Facility in Richland, Washington. This project commenced in August 2003.

  The Environmental Restoration Disposal Facility (ERDF) is a large CERCLA disposal facility that receives radioactive and chemically-contaminated wastes from the Hanford Site. The facility consisted of four (4) disposal cells that are currently being expanded to six (6) cells. Each cell is approximately 500-ft. x 500-ft. at the base and 70-ft.-deep. At the surface, each pair of cells is approximately 710-ft. x 1,420-ft. The construction project consists of excavating Cell Nos. 5 and 6, installing an admix-geomembrane triple liner, double-leachate system and tying the leachate collection system to existing leachate piping.

  Envirotech furnishes all labor, technical and professional services, supervision, material, supplies, equipment, and facilities necessary for performance of CQA services in support of construction of ERDF Cell Nos. 5 and 6. Inspection, testing, and certification is required for all aspects of construction to include excavation, soil classification, fill placement, construction of soil liner test fill, soil liner placement, construction of anchor trenches and sideslope riser trenches, geosynthetic installation, installation of components for leachate collection system, and placement of gravel/operations layers. Envirotech follows the requirements of an Owner-supplied CQA Plan.

At completion of the project, Envirotech shall certify (by a professional engineer registered in the State of Washington) that Cell Nos. 5 and 6 and associated construction have been constructed in accordance with the CQA plan, drawings, and specifications.

In addition to various progress and status meetings specified in the CQA Plan, Envirotech attends supplemental meetings with the DOE, regulatory agencies, or project personnel.

Inspection activities described in the CQA Plan include soil testing and classification; geotechnical testing; installation and performance of a double-ring infiltration (SDRI) testing device; soil and admix placement; and geomembrane and geosynthetic raw materials, manufacturing, fabrication, transportation, handling, and storage.

- **CQC for Closure of RCRA Cell 14 and Expansion of Cell 15, Lone Mountain Facility.** Voss served as the on-site CQC engineer and safety/health officer during the provision of CQC services for the closure of hazardous waste Cell 14 and expansion of Cell 15 at Clean Harbors (formerly Safety-Kleen) Lone Mountain Facility in Waynoka, Oklahoma. Services included project design and specifications review; ensuring compliance with the QA Plan; on-site soils and materials testing; observation and documentation (written and photo) of construction activities; and submittal of certified closure reports to the required State and Federal agencies. Envirotech staffed two (2) 8-hr. shifts to this project and was prepared to staff a third shift upon notice from the client to work 24-hour days.

- **Geotechnical and Liner QA Services, Multiple CAFOS, Northwestern OK.** Voss served as project engineer for geotechnical investigations during the provision of geotechnical and liner quality assurance services during the development of confined animal feeding operations (CAFOS) throughout Oklahoma. Envirotech was retained to prepare and submit a package to include conducting the geotechnical investigations, collecting and analyzing soil samples, and provide construction management services for the development of CAFO sites in Oklahoma and Texas. In addition, Envirotech provided drilling services as well as soil sample collection and laboratory analysis activities. In addition, Envirotech provided a full-time, on-site resident civil engineering technician to oversee the project, prepare daily construction reports, and serve as liaison between the client and contractor. Envirotech met and maintained compliance with the rules and regulations set forth by the Oklahoma Department of Agriculture and USEPA, Region 6.

- **Colvin Center Expansion Project at Oklahoma State University, Stillwater, OK.** Voss served as the CQC/QA engineer and provided daily inspection and testing services during construction of the $18.9 million Colvin Center expansion project at Oklahoma State University in Stillwater, OK. The project included renovating 80,000-sf of existing facility and constructing an additional 50,000-sf to include a new outdoor pool facility. QC/QA work

includes all foundation and soil/concrete testing, pier inspections, and major structural items such as reinforcing steel and structural steel inspections, mortar, pavement, asphalt, roofing, etc. Geotechnical testing includes standard proctor (ASTM D 698), Atterberg Limits (ASTM D 4318), soil compaction testing utilizing a Troxler3430 Nuclear Density Gauge, and pier inspections to ensure proper soil bearing strength.

- **Oakwood Mall Foundation Failure Analysis and Survey.** Voss served as the project engineer during an extensive geotechnical investigation and structural analysis at the Oakwood Mall to diagnose reasons for foundation failure and determine corrective action. The facility was suffering from visible signs of structural fatigue including both interior and exterior damage. The project included a foundation survey allowing for the evaluation of settlement along the perimeter foundation.

JOHN STOVALL
Laboratory Manager

Relevant Experience

John Stovall, laboratory technician, has acquired extensive experience in several laboratory testing methods including soil classification testing, sieve analyses, moisture content testing, and Atterberg Limits. In addition, Stovall's experience includes on-site soil and concrete sample collection as well as in-house laboratory analysis.

Stovall holds an active Troxler Certification for nuclear testing equipment. He is well-versed in the use of the Troxler 3430 Nuclear Density Gauge for field compaction density testing purposes.

Stovall's experience is best illustrated as follows:

- **Construction Quality Assurance (CQA) for Cell Construction at Bechtel-Hanford's Hazardous Waste Disposal Facility in Richland, Washington.** Stovall served as on-site laboratory technician during cell expansion at a Department of Energy (DOE) Environmental Restoration Disposal Facility in Richland, Washington.

  The Environmental Restoration Disposal Facility (ERDF) is a large CERCLA disposal facility that receives radioactive and chemically-contaminated wastes from the Hanford Site. The facility consisted of four (4) disposal cells that were being expanded to six (6) cells. Each cell was approximately 500-ft. x 500-ft. at the base and 70-ft.-deep. At the surface, each pair of cells was approximately 710-ft. x 1,420-ft. The construction project consisted of excavating Cell Nos. 5 and 6, installing an admix-geomembrane triple liner, double-leachate system and tying the leachate collection system to existing leachate piping.

  Stovall provided sample collection and laboratory analysis services in support of construction of ERDF Cell Nos. 5 and 6. Inspection, testing, and certification were required for all aspects of construction to include excavation, soil classification, fill placement, construction of soil liner test fill, soil liner placement, construction of anchor trenches and sideslope riser trenches, geosynthetic installation, installation of components for leachate collection system, and placement of gravel/operations layers.

  In addition to various progress and status meetings specified in the CQA Plan, Stovall attended supplemental meetings with the DOE, regulatory agencies, or project personnel.

- Routinely performs an array of tests to evaluate the physical and chemical properties of soil, rock, water, and other natural and/or synthetic materials for Lone Mountain and miscellaneous projects.

- Conducted laboratory testing including proctor, soil classification, field density, moisture content, sieve analyses, and Atterberg Limits for numerous Lone Mountain and miscellaneous projects.

HNF-IP-0603-IDF
Revision 0

FACILITY RESPONSE PLAN FOR INTEGRATED DISPOSAL FACILITY

Prepared for the U.S. Department of Energy
Assistant Secretary for Environmental Management

Contractor for the U.S. Department of Energy
under Contract DE-AC06-08RL14788

CH2MHILL
Plateau Remediation Company

P.O. Box 1600
Richland, Washington 99352

Approved for Public Release;
Further Dissemination Unlimited

HNF-IP-0603-IDF
Revision 0

FACILITY RESPONSE PLAN FOR INTEGRATED DISPOSAL FACILITY

Document Type: PLAN Program/Project: RRMP

D. D. Cornely
CH2M HILL Plateau Remediation Company

Date Published
May 2020

Prepared for the U.S. Department of Energy
Assistant Secretary for Environmental Management

Contractor for the U.S. Department of Energy
under Contract DE-AC06-08RL14788

CH2MHILL
Plateau Remediation Company
P.O. Box 1600
Richland, Washington 99352

APPROVED
By Janis D. Aardal at 8:47 am, May 11, 2020

Release Approval Date

Approved for Public Release;
Further Dissemination Unlimited

TRADEMARK DISCLAIMER

Reference herein to any specific commercial product, process, or service by tradename, trademark, manufacturer, or otherwise, does not necessarily constitute or imply its endorsement, recommendation, or favoring by the United States Government or any agency thereof or its contractors or subcontractors.

This report has been reproduced from the best available copy.

Printed in the United States of America

This plan covers the following buildings and structures: Integrated Disposal Facility (IDF), Central Accumulation Area Tanks, Central Accumulation Area Containers, Satellite Accumulation Areas, and the IDF Administrative Building

Approved:

Approved via Email	**5/05/2020**
David A. Duranceau, Cognizant Manager	**Date**
Approved via Email	**5/05/2020**
Barry Lawrence, Environmental Compliance Officer	**Date**
Approved via Email	**5/05/2020**
David D. Cornely, Emergency Preparedness Coordinator	**Date**

This document will be reviewed and updated if necessary by Facility Management. The Building Warden has the authority to carry out the provisions of this plan.

TABLE OF CONTENTS

1.0 DANGEROUS WASTE MANAGEMENT DESCRIPTIONS 3
2.0 EMERGENCY ORGANIZATION PERSONNEL 4
3.0 EMERGENCY EQUIPMENT: LOCATION, PHYSICAL DESCRIPTION, AND CAPABILITIES 5
3.1 Fixed Emergency Equipment 5
3.2 Portable Emergency Equipment 5
3.3 Communications Equipment/Warning Systems 5
3.4 Personal Protective Equipment 6
3.5 Spill Control And Containment Supplies 6
4.0 IMPLEMENTATION OF THE PLAN 6
5.0 TAKE COVER AND EVACUATION 8
5.1 Take Cover 8
5.2 Evacuation 8
6.0 EMERGENCY RESPONSE PROCEDURES 10
6.1 Fire And/Or Explosion 11
6.2 Hazardous Material, Dangerous And/Or Mixed Waste Spill 12
6.3 Natural Disasters 13
7.0 PLAN LOCATION AND AMENDMENTS 13
8.0 REFERENCES 13

Figure 1- Aerial View of IDF SAA Locations 4
Figure 2– Facility Staging Areas 9

1.0 DANGEROUS WASTE MANAGEMENT DESCRIPTIONS

The IDF is a single, expandable disposal facility constructed to Resource Conservation and Recovery Act of 1976 (RCRA) Subtitle C standards for disposal of mixed waste. Initial capacity for mixed waste disposal is 82,000 m^3 of waste with an ultimate capacity of up to 450,000 m^3 of waste. Disposal capacity beyond the initial 82,000 m^3 will require a modification to the Part B Permit. The mixed waste types to be disposed in the IDF include vitrified low-activity waste (LAW) from the Waste Treatment and Immobilization Plant (WTP) and secondary solid waste (SSW) disposal quantities averaged over the 28-year mission of WTP, in addition to the average anticipated disposal quantity received from the 200 Area Effluent Treatment Facility (ETF) and other Hanford generators. Additionally, mixed waste generated by IDF operations will be disposed of in IDF.

The IDF also includes two leachate collection CAA tanks with the feed piping located within the boundaries of the lined landfill. Each tank is protected by secondary containment. Leak detection is provided by monitoring instrumentation and visual inspection for leaks. Collected leachate will be stored and sampled before transfer to an onsite treatment, storage, and disposal (TSD) unit.

Hazardous materials handled might include (but may not be limited to) the following: spray adhesive, sorbent, antifreeze, propane, road salt, industrial cleaner and degreaser, and petroleum products. A total list of materials will not be available until IDF begins active-life. The use, storage, and inventory of hazardous materials will be controlled by the project. Hazardous material inventories and safety data sheets will be maintained electronically using current Hanford Site databases.

The SAA(s) have been established for the temporary accumulation and management of containerized waste. Waste typically accumulated in the SAA identified in the following table.

Typical Inventory [for SAA locations]	
Location	**Typical Inventory**
SAA (WSO-19-338-04)	Broken lamps, leaking batteries, discarded chemical products, wipes, gloves and other personal protective equipment, cloth and plastic sheeting, tools, pumps, chemicals, and materials generated from the cleanup of unplanned releases or equipment related spills.

Figure 1- Aerial View of IDF SAA Locations

The SAA is operated under the accumulation provisions of Washington Administrative Code (WAC) 173-303-200 and 173-303-201 for dangerous waste.

2.0 EMERGENCY ORGANIZATION PERSONNEL

The complete building emergency organization list of positions, names, work locations, and telephone numbers for the Integrated Disposal Facility is maintained separately. Copies of this list are distributed and placed at the following locations:

Building Warden (Emergency Coordinator)		
Job title	**Work location**	**Work phone**
ERDF Field Work Supervisor	MO-607	280-0657
ERDF Facility Manager	MO-607	947-1651
ERDF Transportation Manager	MO-607	430-6320
ERDF Disposal Manager	Building 6250	308-2303

The names and home phone numbers of personnel are maintained at the single point-of-contact (the Hanford Patrol Operations Center) telephone number 373-3800 in accordance with the Hanford Facility RCRA Permit, Condition II.A.4.

3.0 EMERGENCY EQUIPMENT: LOCATION, PHYSICAL DESCRIPTION, AND CAPABILITIES

This section indicates the types of emergency equipment available at the facility.

3.1 Fixed Emergency Equipment

The following table lists fixed emergency equipment.

Fixed Emergency Equipment		
Type	**Location**	**Capability**
6-Inch Fire Hydrants	IDF	Fire suppression

3.2 Portable Emergency Equipment

The following table lists portable emergency equipment.

Portable Emergency Equipment		
Type	**Location**	**Capability**
Fire extinguishers	In motorized equipment (e.g., trucks, etc.), nearby structures (e.g., change trailers, storage buildings, etc.).	Use on any Class A, B, or C fires. (Note: Some are only B and C.) Do NOT use on sodium.

Portable Emergency Equipment [For CAA/SAA Locations]		
Type	**Location**	**Capability**
Fire extinguishers	In motorized equipment (e.g., trucks, etc.), nearby structures (e.g., change trailers, storage buildings, etc.).	Use on any Class A, B, or C fires. (Note: Some are only B and C.) Do NOT use on sodium.

3.3 Communications Equipment/Warning Systems

The following table lists communications equipment.

Communications Equipment		
Type	**Location**	**Capability**
Cell phones	Portable	Communication

NOTE: ***Site-wide communications and warning systems are identified in DOE/RL-94-02, Hanford Emergency Management Plan, Table 5.1.***

3.4 Personal Protective Equipment

The following table lists personal protective equipment.

Personal Protective Equipment [For IDF Landfill]		
Type	**Location**	**Capability**
N/A		

Personal Protective Equipment [For CAA/SAA Locations]		
Type	**Location**	**Capability**
Personal Protective Equipment	SAA (WSO-19-338-04)	Protection from exposure to spills in SAA.

3.5 Spill Control and Containment Supplies

The following lists spill kits and spill control equipment.

Spill Kits and Spill Control Equipment [For IDF Landfill]		
Type	**Location**	**Capability**
NA		

Spill Kits and Spill Control Equipment [For CAA/SAA Locations]		
Type	**Location**	**Capability**
Portable spill response kit	SAA (WSO-19-338-04)	Initial spill response kit at a minimum includes: Absorbent materials, gloves, plastic bags, and etc.

4.0 IMPLEMENTATION OF THE PLAN

In accordance with WAC 173-303-201(14)(b) or WAC 173-303-360(2)(b), the Building Warden (BW) ensures that trained personnel identify the character, source, amount, and areal extent of the release, fire, or explosion to the extent possible. Identification of waste can be made by activities that can include, but are not limited to, visual inspection of dangerous waste, sampling activities in the field, reference to inventory records, or by consulting with facility personnel. **Samples of materials involved in an emergency might be taken by qualified personnel and analyzed as appropriate. These activities must be performed with a sense of immediacy and shall include available information.**

The BW shall use the following guidelines to determine if an event has met the requirements of WAC 173-303-201(14)(d) or WAC 173-303-360(2)(d):

1. The event involved an unplanned spill, release, fire, or explosion,

AND

2. a. The unplanned spill or release involved a dangerous waste, or the material involved became a dangerous waste as a result of the event (e.g., product that is not recoverable.),

OR

2. b. The unplanned fire or explosion occurred at the *IDF* or transportation activity subject to RCRA contingency planning requirements,

AND

3. Time-urgent response from an emergency services organization was required to mitigate the event or a threat to human health or the environment exists.

As soon as possible, after stabilizing event conditions, the BW shall determine, in consultation with the CHPRC environmental single point-of-contact, if notification to the Washington State Department of Ecology is needed to meet WAC 173-303-201(14)(d) or WAC-173-303-360 (2)(d) reporting requirements. If all of the conditions under 1, 2, and 3 are met, notifications are to be made to Ecology. Additional information is found in DOE/RL-94-02, *Hanford Emergency Management Plan*, Section 4.2, and MSC-PRO-EI-48217, *Environmental Event Notification (Including Spills/Releases and Agency Notifications) and Response.*

If review of all available information does not yield a definitive assessment of the danger posed by the incident, a worst-case condition will be presumed and appropriate protective actions and notifications will be initiated. The BW is responsible for initiating any protective actions based on their best judgment of the incident.

The BW must assess each incident to determine the response necessary to protect the personnel, facility, and the environment. If assistance from Hanford Patrol, Hanford Fire Department, or ambulance units is required, the Hanford Emergency Response Number (911 or 373-0911 if using a cell phone) must be used to contact the POC and request the desired assistance. To request other resources or assistance from outside the *IDF*, the POC business number is used (373-3800).

5.0 TAKE COVER AND EVACUATION

5.1 Take Cover

When the Take Cover Alarm is activated, personnel will take cover in the nearest suitable building or trailer.
A message followed by the Take Cover siren is transmitted over the area emergency sirens. The following actions must be taken or considered:

- Shut doors and windows and wait for further instructions.
- Secure ventilation system.
- Follow normal exit procedures from radiological areas.
- Secure classified documents and prepare for a possible evacuation.
- Report your location to the Accountability Aid or the BW.

5.2 Evacuation

Figure 2 provides identification of the primary staging area and a general layout of the IDF. Alternate evacuation routes will be used on a case-by-case basis based on meteorological conditions at the time of the event and as directed by the BW.

DOE/RL-94-02, *Hanford Emergency Management Plan*

DOE O 231.1A, *Environment, Safety, and Health Reporting*, U.S. Department of Energy, Washington D.C.

DOE M 231.1-2, *Occurrence Reporting and Processing of Operations Information*, U.S. Department of Energy, Washington D.C.

MSC-PRO-48217, *Environmental Event Notification (Including Spills/Release and Agency Notifications) and Response*

WAC 173-303, *Washington State Dangerous Waste Regulations, Washington Administrative Code*, Washington State Department of Ecology, Olympia, Washington

Ecology, *Hanford Facility Resource Conservation and Recovery Act Permit for the Treatment, Storage, and Disposal of Dangerous Waste, Permit Number* WA7890008967, Washington State Department of Ecology, Olympia, Washington, as amended.

Figure 2– Facility Staging Areas

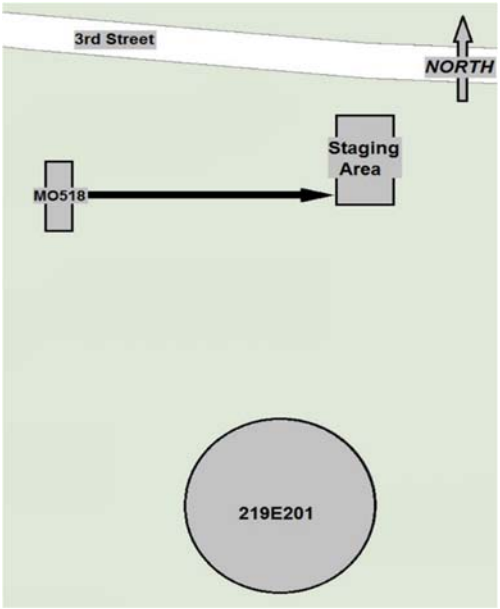

If an evacuation is ordered or the evacuation siren sounds in the area of the IDF, personnel will proceed to the staging area.

The BW or staging area manager directs the evacuation; however, to ensure that evacuations can be conducted promptly and safely, all personnel must be familiar with the evacuation procedure.

Area evacuations are rapid or controlled and the differences between them are pointed out in the following steps. When possible, these steps must be performed concurrently.

Area Evacuation Procedure
Halt any operations or work and place equipment and structures in a safe condition. Use emergency shutdown procedures for rapid evacuation.
Use whatever means are available (portable radios, bullhorns, cell phones, runners, etc.) to pass the evacuation information to personnel.
Evacuate personnel to the staging area; group personnel as follows: potentially contaminated protective clothing, keys immediately available for vehicles, and those needing rides. Assist personnel that are temporarily/permanently disabled.
Conduct personnel accountability. If unable to account for personal, report personnel accountability results to the Hanford Emergency Operations Center (Hanford EOC).
Inform IC of any potentially affected personnel (e.g., injured, contaminated, exposed, etc.) once the IC arrives at the ICP.
Relay pertinent evacuation information (routes, destination, etc.) to drivers.
Dispatch vehicles as soon as the vehicles are loaded.
Report status to the Hanford EOC, request additional transportation if required, and report if any personnel remain who are performing late shutdown duties.

6.0 EMERGENCY RESPONSE PROCEDURES

The facility/location described in this plan are not normally occupied. This plan describes the standard emergency response actions that would be followed at a normally occupied facility/location. Actual emergency response actions for this facility/location may vary somewhat from the steps described below based on the specific activity or circumstances present at the time of the event.

The Building Warden (BW) is responsible for:

- Implementation of Protective Actions as needed.
- Accountability of personnel.
- Ensuring that the Patrol Operations Center has been contacted.
- Use of the DOE-0223, RLEP 1.1, Building Warden/Building Emergency Director for Low-Hazards Facilities checklist for event response.
- Use of the DOE-0223, 3.4, Event Termination, Reentry, and Recovery.
- Developing and transmitting event reports.

6.1 Fire and/or Explosion

In the event of a fire, the discoverer activates a fire alarm (pull box); calls 911 (373-0911 if using a cell phone) or verifies that 911 has been called. Automatic initiation of a fire alarm (through the smoke detectors and sprinkler systems) is also possible.

- **Unless otherwise instructed, personnel shall evacuate the area/building by the nearest safe exit and proceed to the designated staging area for accountability.**
- **On actuation of the fire alarm, ONLY if time permits, personnel should shut down equipment, secure waste, and lock up classified materials (or hand carry them out). The alarm automatically signals the Hanford Fire Department.**
- **The BW proceeds directly to the ICP, obtains all necessary information pertaining to the incident and sends a representative to meet Hanford Fire Department.**
- **The BW provides a formal turnover to the IC when the IC arrives at the ICP.**
- **The BW informs the Hanford Site Emergency Response Organization as to the extent of the emergency (including estimates of dangerous waste and mixed waste quantities released to the environment).**
- **If operations are stopped in response to the fire, the BW ensures that systems are monitored for leaks, pressure buildup, gas generation and ruptures.**
- **Hanford Fire Department firefighters extinguish the fire as necessary.**
    - **NOTE:** ***Following a fire and/or explosion,*** *WAC 173-303-640(7) for final status/generator tanks* ***will be addressed for the*** *leachate tanks* ***regarding fitness for use.***

In the event of a fire, the discoverer announces a local verbal fire alarm; calls 373-0911 or verifies that 373-0911 has been called.

- **Unless otherwise instructed, personnel shall evacuate the area by the safest exit route (upwind and proceed to the designated staging area for accountability).**
- **On verbal annunciation of the fire event, ONLY if time permits, personnel should shut down equipment, and secure waste.**
- **The BW proceeds directly to the Staging Area, obtains all necessary information pertaining to the incident and sends a representative to meet the Hanford Fire Department.**
- **The BW provides a formal turnover to the Incident Commander (IC) when the IC arrives at the ICP.**

- **The BW informs the Hanford Site Emergency Response Organization as to the extent of the emergency (including estimates of dangerous waste and mixed waste quantities released to the environment).**

- **If operations are stopped in response to the fire, the BW ensures that systems are monitored for leaks, pressure buildup, gas generation, and ruptures.**

- **Hanford Fire Department firefighters shall extinguish the fire as necessary.**

NOTE: ***Following a fire and/or explosion,*** *WAC 173-303-640(7) for final status/generator tanks* ***will be addressed for the*** *leachate tanks* ***regarding fitness for use.***

6.2 Hazardous Material, Dangerous and/or Mixed Waste Spill

Spills can result from many sources including process leaks, container spills or leaks, damaged packages or shipments, or personnel error. Spills of mixed waste are complicated by the need to deal with the extra hazards posed by the presence of (choose one of the following terms "radioactive" or "Atomic Energy Act") materials.

- **The discoverer notifies the BW and initiates SWIM response:**
  - **<u>S</u>tops work,**
  - **<u>W</u>arns others in the vicinity,**
  - **Isolates the area,**
  - **Minimizes exposure to the hazards**

- **The BW determines if emergency conditions exist requiring response from the Hanford Fire Department based on classification of the spill and injured personnel, and evaluates the need to perform additional protective actions.**

- **If the Hanford Fire Department resources are not needed, the spill is mitigated with resources identified in Section 3.0 of this plan and proper notifications are made.**

- **If the Hanford Fire Department resources are needed, the BW calls 911 (373-0911 if using a cell phone).**

- **The BW sends a representative to meet the Hanford Fire Department.**

- **The BW provides a formal turnover to the IC when the IC arrives at the ICP.**

- **The BW informs the Hanford Site Emergency Response Organization as to the extent of the emergency (including estimates of dangerous waste and mixed waste quantities released to the environment).**

- **If operations are stopped in response to the spill, the BW ensures that systems are monitored for leaks, pressure buildup, gas generation, and ruptures.**

- **Hanford Fire Department stabilizes the spill.**

NOTE: ***For response to leaks or spills and disposition of leaking or unfit-for-use tank systems, refer to*** *WAC 173-303-640(7) for final status/generator tanks*

6.3 Natural Disasters

Natural disasters can include, but are not limited to, seismic events, volcanic eruptions, high winds, tornados, etc.). Depending on the circumstances, natural disasters may cause fires, releases, or explosions that threaten human health and the environment.

In the event of a natural disaster, the BW will carry out the actions described in Sections 6.1 and 6.2, as applicable.

7.0 PLAN LOCATION AND AMENDMENTS

Copies of this plan are maintained at the following locations:

- MO-518
- MO-607

This plan will be reviewed and immediately amended, as necessary, in accordance with DOE/RL-94-02, *Hanford Emergency Management Plan,* Section 14.3.1.1.

8.0 REFERENCES

DOE/RL-94-02, *Hanford Emergency Management Plan*

DOE O 231.1A, *Environment, Safety, and Health Reporting*, U.S. Department of Energy, Washington D.C.

DOE M 231.1-2, *Occurrence Reporting and Processing of Operations Information*, U.S. Department of Energy, Washington D.C.

MSC-PRO-48217, *Environmental Event Notification (Including Spills/Release and Agency Notifications) and Response*

WAC 173-303, *Washington State Dangerous Waste Regulations, Washington Administrative Code*, Washington State Department of Ecology, Olympia, Washington

Ecology, *Hanford Facility Resource Conservation and Recovery Act Permit for the Treatment, Storage, and Disposal of Dangerous Waste, Permit Number* WA7890008967, Washington State Department of Ecology, Olympia, Washington, as amended.