Attachment 1

Integrated Emissions Baseline Report for the Hanford Tank Waste Treatment and Immobilization Plant (24590-WTP-RPT-PO-03-008, Rev 0)

Attachment 1
Integrated Emissions Baseline Report for the Hanford Tank Waste Treatment and Immobilization Plant (24590-WTP-RPT-PO-03-008, Rev 0)

Orientation

This report documents the methods, assumptions, and resulting process emission rates. The model used was the Hanford Tank Waste Treatment and Immobilization Plant (WTP) project's baseline steady-state flowsheet model. This document was issued on 30 May 2003.

Errata to the *Integrated Emissions Baseline Report for the Hanford Tank Waste Treatment and Immobilization Plant* (24590-WTP-RPT-PO-03-008, Rev 0)

The *Integrated Emissions Baseline Report for the Hanford Tank Waste Treatment and Immobilization Plant* (referred to herein as the "emissions report") is a document that will be routinely updated to reflect changing design features that influence emissions at the WTP. The current emissions report (24590-WTP-RPT-PO-03-008, Rev 0) does not consider several recent design changes that are reflected in the narrative of the *Environmental Risk Assessment Work Plan for the Hanford Tank Waste Treatment and Immobilization Plant* (24590-WTP-RPT-PO-03-008). These changes include the deletion of the technetium ion exchange process in pretreatment, rearrangement of the treated activated carbon unit in low-activity waste (LAW) vitrification, and rearrangement of the treated activated carbon and silver mordenite units in high-level waste (HLW) vitrification. These changes will be reflected in the next revision to the emissions report. Each of the design changes, along with their expected impact to air emissions, is discussed below.

Removal of Technetium Ion Exchange

The conceptual and preliminary design of the WTP included a processing step to remove soluble technetium from the LAW waste stream using ion exchange. Under the earlier design, technetium-99 removed from the LAW waste stream was transferred to the HLW vitrification facility for immobilization. Recently, the US Department of Energy (DOE) and WTP concluded that technetium-99 removal was not a necessary, practical, or cost-effective process, and the decision was made to delete the technetium ion exchange process. Subsequent revisions to the emissions report will remove technetium ion exchange from the narrative, figures, and emissions model.

The deletion of technetium ion exchange will result in a different emissions profile for technetium-99. The emission rates for constituents of potential concern other than technetium-99 will not be affected by the deletion of the technetium ion exchange process. The table below summarizes the technetium-99 emission rates that correspond to unabated and abated emission points in the facility without the technetium ion exchange process. For comparative purposes, the emission rate estimates that applied with technetium ion exchange in place have been included in the table as well. Comparison of the emission rates reveals that the abated and unabated emission values in pretreatment are essentially unaffected by the change. The unabated and abated emissions of technetium-99 in the LAW vitrification facility are observed to increase. The increased technetium emissions are the result of the soluble fraction of technetium (that is, the fraction of technetium that was previously removed from the LAW) entering the LAW melter and receiving less treatment than that received in the HLW offgas system. Specifically, the presence of a high-efficiency mist eliminator (HEME) in HLW results in a higher overall technetium removal efficiency than that of the LAW vitrification offgas system. The abated and unabated emission values associated with the HLW vitrification are seen to decrease slightly due to a reduced amount of technetium-99 processed through the HLW melter and offgas system.

Unabated and Abated Emission Rates of ^{99}Tc With and Without Technetium Ion Exchange

	Feed	Unabated Streams					Abated Streams				
	FRP14	PVP01	PJV04	LMP06	HMP06	PJV32	PVP12	PJV11	LVP26	HOP33	PJV34
	WTP Feed	PT Vessel Vent	PT RFD/PJM	LAW Melter	HLW Melter	HLW PJM/RFD	PT Vessel Vent	PT RFD/PJM	LAW Melter	HLW Melter	HLW PJM/RFD
Compound	Ci/d	Ci/d	Ci/d	Ci/d	Ci/d	Ci/d	Ci/d	Ci/d	Ci/d	Ci/d	Ci/d
^{99}Tc without ion exchange	1.86E+02	1.57E-03	1.79E-02	1.11E+01	8.16E+01	1.27E-07	1.18E-11	1.79E-08	7.10E-07	5.24E-08	6.33E-13
^{99}Tc with ion exchange	1.87E+02	1.53E-03	1.84E-02	3.75E-01	9.32E+01	1.43E-07	1.15E-11	1.84E-08	2.41E-08	5.98E-08	7.17E-13

Rearrangement of LAW Vitrification Secondary Offgas System

The LAW vitrification secondary offgas system has been rearranged to increase the life expectancy of the catalyst used in the thermal catalytic oxidizer (TCO). Prior to the rearrangement, the secondary offgas configuration consisted of high-efficiency particulate air (HEPA) filtration, thermal catalytic oxidation, selective catalytic reduction (SCR), caustic scrubbing, and sulfur impregnated carbon adsorption. The existing emissions report reflects this prior configuration, as shown below.

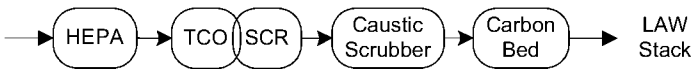

The rearranged configuration places the activated carbon adsorption unit between the HEPA filters and TCO. The carbon bed will remove mercury and other halides from the stream prior to being treated by the TCO, thereby increasing the life expectancy of the TCO catalyst. The offgas continues through the SCR process and caustic scrubber as before, prior to being released to the LAW stack. The rearranged secondary offgas system design will be reflected in the next revision to the emissions report, as shown below.

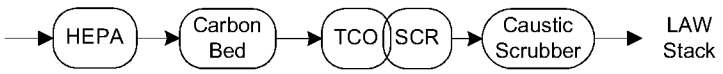

The LAW vitrification secondary offgas system rearrangement is not expected to result in any changes to the estimated emission rates currently reflected in the emissions report.

Rearrangement of HLW Vitrification Secondary Offgas System

The HLW vitrification secondary offgas system has also been rearranged to increase the life expectancy of the thermal catalytic oxidizer. Prior to the rearrangement, the secondary offgas system configuration consisted of HEPA filtration, followed by thermal catalytic oxidation, selective catalytic reduction, silver mordenite (AgM), and activated carbon adsorption. The existing emissions report reflects this prior configuration, as shown below.

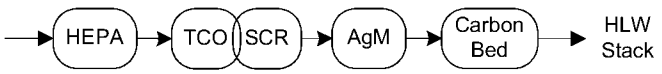

The rearranged configuration will place the activated carbon adsorption and silver mordenite units between the HEPA filters and TCO. The carbon bed and silver mordenite will remove mercury, iodine, and other halides from the stream prior to being treated by the TCO, thereby increasing the life expectancy of the TCO catalyst. Following thermal catalytic oxidation, the offgas will proceed through the SCR process and be discharged to the HLW stack. The next revision to the emissions report will reflect the rearranged configuration, as shown below.

The HLW vitrification secondary offgas system rearrangement is not expected to result in any changes to the estimated emission rates currently reflected in the emissions report.

Document title: **Integrated Emissions Baseline Report for the Hanford Tank Waste Treatment and Immobilization Plant**

Contract number: DE-AC27-01RV14136

Department: Process Operations

Author(s): E Berrios J Cook E Stubbs

Principal author signature:

Document number: 24590-WTP-RPT-PO-03-008, Rev 0

Checked by: O Block

Checker signature:

Date of issue: 30 May 2003

Issue status: Approved

Approved by: K Rueter

Approver's position: Manager, Process Operations

Approver signature:

River Protection Project
Waste Treatment Plant
2435 Stevens Center Place
Richland, WA 99352
United States of America
Tel: 509 371 2000

History Sheet

Rev	Date	Reason for revision	Revised by
A	21 April 2003	Draft for WTP internal review.	E Berrios/J Cook
0	30 May 2003	Initial issue. This document supercedes all previously issued integrated emissions baseline reports, including *Integrated Emissions Baseline Report for the River Protection Project Waste Treatment Plant* (RPT-W375-ES00001, Rev 2), and Integrated *Emissions Baseline Report Update* (24590-WTP-RPT-PT-02-002, Rev 2). This document reflects a 2 LAW and 2 HLW melter configuration.	E Berrios/J Cook

Contents

Acronyms and Abbreviations v
Executive Summary vii
1 Introduction 1
1.1 Pretreatment Facility Changes 1
1.2 LAW Facility Changes 1
1.3 HLW Facility Changes 1
1.4 Pretreatment Emission Sources 2
1.5 LAW Vitrification Emission Sources 2
1.6 HLW Vitrification Emission Sources 2
2 Process Configuration 3
2.1 General Description 3
2.2 Pretreatment Overview 3
2.3 LAW Vitrification Overview 4
2.4 HLW Vitrification Overview 5
2.5 Emissions Objective 5
3 Constituents of Potential Concern 6
4 Analysis Tool 7
5 Representative Constituents in the Emissions Analysis 7
5.1 Selection of Representative Organic COPCs 7
5.2 Selection of Representative Inorganic, Radionuclide, and Criteria Pollutant COPCs 9
5.3 Application of Representative Organic COPCs 9
5.4 Application of Representative Inorganic and Radionuclide COPCs 10
6 Process Flowsheet Condition 11
7 Flowsheet Description and Emissions Analysis 11
7.1 Flowsheet Description 11
7.2 Emissions Analysis 12
8 Emissions Analysis Bases 15
8.1 Throughput and Operating Conditions 16
8.2 Feed Concentration for Organic Compounds 16
8.3 Feed Concentrations for Inorganic and Radionuclide Compounds 18
8.4 Concentration of Products of Incomplete Combustion 19
8.5 Phase Allocation of Constituents of Potential Concern 20
8.6 Equipment Decontamination Factors 21

9 Summary of Emissions Analysis Results 22

10 References 23

Appendices

Appendix A ACM Results for Selected Streams ..... A-i

Appendix B Calculation: Estimation of Non-SSFM Represented Organic Emission Rates Required to Support the Integrated Emissions Baseline Report ..... B-i

Appendix C Calculation: Integrated Emissions Baseline Report Non-SSFM Represented Constituents Emission Rate Estimation ..... C-i

Appendix D Calculation: Updated Emissions Run Feed Vector ..... D-i

Appendix E Calculation: Integrated Emissions Report PIC Estimation ..... E-i

Appendix F Phase Determination for COPCs Potentially Emitted from the Hanford Tank Waste Treatment and Immobilization Plant (WTP) ..... F-i

Appendix G Organic Abatement DFs in Pretreatment PVP System ..... G-i

Tables

Table 1 List of Process Flow Diagrams 26

Table 2 List of Organic COPCs and PICs 27

Table 3 List of Inorganic COPCs and Criteria Pollutants 37

Table 4 List of Radionuclide COPCs 39

Table 5 Representative Compounds for Inorganic and Radionuclides 40

Table 6 Estimated Organic Feed Concentrations 41

Table 7 Estimated LAW Feed Concentrations 47

Table 8 Estimated HLW Feed Concentrations 49

Table 9 Summary of Assumed Stack Concentrations for PICs 51

Table 10 Pretreatment Emissions Analysis Equipment Decontamination Factors 52

Table 11 Summary of Offgas Treatment Equipment DFs for Organic COPCs 54

Table 12 HLW and LAW Vitrification Emissions Analysis Equipment Decontamination Factors 59

Table 13 Summary of Organic Constituents Emission Rates for the WTP 63

Table 14 Estimated Inorganic COPC Emissions 69

Table 15 Estimated Radionuclide COPC Emissions 71

Table 16 WTP PIC Emissions 73

Figures

Figure 1 Simplified WTP Process Overview 76
Figure 2 Simplified Pretreatment Process Flowsheet (Sheet 1 of 2) 77
Figure 3 Simplified Pretreatment Process Flowsheet (Sheet 2 of 2) 78
Figure 4 Simplified LAW Vitrification Process Flowsheet 79
Figure 5 Simplified HLW Vitrification Process Flowsheet 80
Figure 6 Emissions Estimate Objectives 81

Acronyms and Abbreviations

ACM	Aspen Custom Modeler
ASIL	acceptable source impact levels
ASME	American Society of Mechanical Engineers
BBI	best basis inventory
BNI	Bechtel National, Inc.
CAS	Chemical Abstracts Service
COPC	constituent of potential concern
DF	decontamination factor
DOE	US Department of Energy
DOE-RL	US Department of Energy, Richland Operations Office
DST	double-shell tank
E&NS	environmental and nuclear safety
EPA	US Environmental Protection Agency
ESP	electrostatic precipitator
ETF	effluent treatment facility
HEME	high efficiency mist eliminator
HEPA	high efficiency particulate air (filter)
HLW	high-level waste
LAW	low-activity waste
ILAW	immobilized low-activity waste
LERF	liquid effluent retention facility
MACT	maximum achievable control technology
MW	molecular weight
NO_x	nitrogen oxides
PAH	polycyclic aromatic hydrocarbon
PCB	polychlorinated biphenyl
PFD	process flow diagrams
PIC	product of incomplete combustion
PJM	pulse-jet mixer
PJV	pulse-jet ventilation system
QAM	quality assurance manual
R&T	research and technology

RF	release factor
RFD	reverse flow diverter
SBS	submerged bed scrubber
SCR	selective catalytic reduction
SOW	statement of work
SRTC	Savannah River Technology Center
SSFM	steady state flowsheet model
SVOC	semivolatile organic compound
TEQ	toxicity equivalent quotient
TRU	transuranic elements
TWINS	Tank Waste Information Network System
VOC	volatile organic compound
VSL	Vitreous State Laboratory
WESP	wet electrostatic precipitator
WTP	Hanford Tank Waste Treatment and Immobilization Plant

Executive Summary

The Hanford Tank Waste Treatment and Immobilization Plant (WTP) is designed to vitrify radiochemical waste comprised primarily of inorganic salts and oxides, with smaller amounts of organics and radionuclides. An engineering estimate of stack emissions is necessary to facilitate preparation and approval of air permits required for construction and operation of the WTP. The emissions information will also be used to support human health and ecological risk assessment.

Previously released emissions reports, including the *Integrated Emissions Baseline Report for the River Protection Project Waste Treatment Plant* (RPT-W375-ES00001) and the *Integrated Emissions Baseline Report Update* (24590-WTP-RPT-PT-02-002), contained estimated emission rates for 470 organic, inorganic, and radionuclide constituents of potential concern (COPCs) from the WTP. The emission rates were estimated using the steady state flowsheet model (SSFM), ACM (Aspen Custom Modeler). This report supercedes earlier reports and reflects emission estimates that are consistent with current regulatory permitting assumptions and aligned with WTP design evolution and research and technology (R&T) data reconciliation.

A team comprised of personnel from the process operations and environmental and nuclear safety (E&NS) groups have cooperatively produced this emissions report. The following summarizes the report results:

- The emissions profile presented is adequately conservative and bounds the emissions of 2 low-activity waste (LAW) melters with expanded capacity and 2 high-level waste (HLW) melters.
- Estimated emission rates for 250 organic feed constituents, 120 organic products of incomplete combustion (PICs), 49 inorganic constituents, 46 radionuclide constituents, and 5 criteria pollutants have been predicted. These emissions are associated with 2 pretreatment process flues, 1 LAW vitrification process flue, and 3 HLW vitrification process flues. Pretreatment, LAW, and HLW cell flues are not part of the scope of this document.
- Predicted emission rates for all 470 COPCs are conservative. The concentration of the toxic organics in the feed utilized for this analysis is 280 times greater than detected concentrations or the detection limit of an actual Hanford tank sample collected from a high organic-bearing waste. The inorganic and radionuclide feed bases are also conservative. WTP contractual maximum concentrations or Hanford "best basis inventory" (BBI) maximum concentrations were used as the basis for inorganic and radionuclide COPCs.
- The WTP baseline steady state flowsheet was used to produce this emissions profile. This flowsheet represents the WTP design as of January 2, 2003. It also reflects the latest design bases and R&T information.
- R&T data from testing at the Vitreous State Laboratory (VSL) was used to estimate generation rates of PICs from all 3 facilities. The PIC emission rates were calculated on the basis that these constituents are present in the stack at an upper analytical detection limit.
- Evaporator partitioning and organic vessel vent emissions were predicted from known liquid phase concentrations using vapor-liquid equilibrium. Henry's Law constants for 250 organic compounds in the feed were compiled for the vapor-liquid equilibrium calculations.

1 Introduction

In May of 2001, Bechtel National, Inc. (BNI), released the first revision of *Integrated Emissions Baseline Report for the River Protection Project Waste Treatment Plant,* RPT-W375-ES00001 (hereinafter referred to as the "Emissions Report"). The Emissions Report contained an estimate of stack emissions based on the April 2000 design of the Hanford Tank Waste Treatment and Immobilization Plant (WTP). These emission estimates were necessary to support air permits for construction and operation of the WTP.

Since the release of the Emissions Report, new R&T testing data has been made available to the project that affects the emissions generation. Also, design changes have occurred, including a shift to a 2 LAW melter and 2 HLW melter (2 + 2) configuration. In addition, the bases for the emissions profile have been reviewed and updated by a team comprised of personnel from process operations and E&NS with inputs from R&T and process engineering. Several sub-teams were formed to review different aspects of the bases, ranging from the feed vector to the removal efficiencies and assumptions. Each team used the latest R&T data and design basis as input and updated the bases, as necessary.

In order to incorporate the updated bases from the emissions task teams and to reflect the new 2 + 2 melter configuration, an updated emissions profile was developed and is presented in this report. The data from this profile will supplement the update of the risk assessment analysis and air permits.

Design changes reflected in this new emissions profile are addressed in the following text.

1.1 Pretreatment Facility Changes

- Tank reconfiguration
- Evaporation of HLW feed through the feed evaporator
- Treatment of LAW and HLW feeds through the same ultrafiltration unit
- Deletion of the low-level pretreatment plant
- Treatment of all vessel vents and evaporator overheads in a common offgas system
- Replacement of the pulse-jet ventilation (PJV) system high-efficiency mist eliminator (HEME) with a demister

1.2 LAW Facility Changes

- Deletion of 1 LAW melter
- Addition of treated activated carbon beds for mercury abatement

1.3 HLW Facility Changes

- Addition of a second HLW melter and its associated offgas train
- Addition of treated activated carbon beds for mercury abatement
- Deletion of the caustic scrubber
- Addition of the silver mordenite unit for radioactive iodine removal and acid gases
- Addition of a NO_x selective catalytic reducer

These changes reflect the WTP project's design as of 2 January 2003.

The intent of this emissions estimate is to arrive at appropriately realistic and conservatively bounded emission rates that rely upon defensible, documented assumptions. The emission rates at the process flues are referred to in this document as abated emissions. This document also presents unabated emission rates. These unabated emission rates correspond to the emission rates of COPCs at generation points in the process. This document provides the methods and assumptions for arriving at the emission rates from the emission sources addressed below.

1.4 Pretreatment Emission Sources

Pretreatment emission sources consist of the following:

- Unabated emissions from the evaporator offgases, vessel vent exhaust, and exhaust from the reverse-flow diverters (RFDs) and pulse-jet mixers (PJMs)
- Abated emissions from the pretreatment offgas treatment system

1.5 LAW Vitrification Emission Sources

LAW vitrification emission sources are:

- Unabated emissions from the LAW melter
- Abated emissions from the LAW melter offgas treatment systems, including vessel vents

1.6 HLW Vitrification Emission Sources

Lastly, HLW vitrification emission sources are made up of the following:

- Unabated emissions from the HLW melter and PJM/RFD exhaust
- Abated emissions from the HLW melter offgas, RFD/PJM exhaust, and vessel vent offgas treatment systems

This document is structured as outlined below.

- Section 2 provides an overview of the WTP process.
- Sections 3, 4, and 5 identify the COPCs evaluated and describe the steady state flowsheet model (SSFM), the primary tool used for the evaluation.
- Sections 6, 7, and 8 provide the flowsheet conditions, flowsheet structure, and bases for the emissions profile generation.
- Section 9 of this report provides a summary of the emissions estimates.
- Appendix A contains SSFM stream-specific report output for unabated, abated, and feed points in the WTP process. The rest of the appendices provide supporting documentation for the emissions profile generated.

2 Process Configuration

2.1 General Description

The previous emissions report (*Integrated Emissions Baseline Report for the River Protection Project Waste Treatment Plant,* RPT-W375-ES-00001) estimated emissions using a flowsheet that was based on the WTP conceptual design available at the time. Since then, the design of the WTP has evolved; therefore, the current emissions flowsheet reflects those changes and improvements. Table 1 lists the process flow diagrams (PFDs) that establish the basis for the updated emissions flowsheet and analysis.

One significant design change has been incorporated into the current emissions flowsheet that is not reflected in the low-activity waste (LAW) and high-level waste (HLW) process flow diagrams depicted in Table 1; this change pertains to a new configuration of LAW and HLW melters. The previous emissions report (RPT-W375-ES-00001) was based on continuous operation of 3 LAW melters and 1 HLW melter. In 2002, the US Department of Energy (DOE) and the WTP project jointly agreed to shift to a design based on operation of 2 LAW melters and 2 HLW melters, which is reflected by the current emissions flowsheet.

Figure 1 provides a simplified overview of the WTP process. In Figure 1, the movement of LAW and HLW waste can be traced from a starting point in the DOE double-shell tank system (shown in the lower-left corner of the diagram) through the various pretreatment unit operations (including feed evaporation, ultrafiltration, cesium, and technetium ion exchange) and into the LAW and HLW melter systems. The treatment of offgas resulting from operations of the pretreatment and melter processes, (including reverse flow diverter and pulse-jet mixing and vessel ventilation of vessels not individually depicted on the diagram), can also be traced to a point source emission location in the pretreatment, LAW vitrification, or HLW vitrification stack. The diagram has shading to distinguish the offgas treatment steps from other process operations.

Figures 2, 3, 4, and 5 provide a more detailed depiction of the WTP process. Figures 2 and 3 focus on the pretreatment processes and vessels. Figures 4 and 5 show the LAW vitrification and HLW vitrification processes, respectively. The arrows and lines leaving Figures 2, 3, 4, and 5 are positioned in a fashion that allows the reader to place them side to side and view the overall integrated process. The figures show the configuration of major system components and include selected stream names that correspond to stream identifiers in the steady state flowsheet model (SSFM). Figure 2, for example, shows stream FRP14 coming from the double-shell tanks into the HLW feed receipt vessel. Stream FRP14 is the unique identifier in the SSFM that corresponds to the HLW feed vector established for the emission estimate. Additional details are included in Sections 8.2 and 8.3 on the assumed composition and basis for this feed stream. General process descriptions for the 3 main WTP facilities are spelled out below.

2.2 Pretreatment Overview

The Hanford tank farm contractor transfers waste from the waste tanks to the WTP pretreatment facility. LAW Envelopes A, B, and C are transferred to the WTP as solutions that contain some undissolved solids (Envelope D-type waste or undesignated LAW precipitated salts). HLW undissolved solids (Envelope D) are transferred as slurry to the WTP pretreatment facilities.

Low sodium concentration (< 5 molar) waste received from the tank farms and some low sodium concentration recycle streams from the pretreatment and vitrification facilities are concentrated in the waste feed evaporator. In most cases, the sodium concentration from the waste feed evaporator is about 5 molar sodium. However, other processing constraints (for example, undissolved solids concentration and slurry-specific gravity) may require a lower sodium concentration.

When the sodium concentration is acceptable for further processing (either as received or after evaporation), the waste goes through the following processes:

- Feeds from LAW Envelopes A or B are blended with HLW feeds (Envelope D) in an ultrafilter preparation vessel. The ratio of LAW to HLW undissolved solids is established to support both LAW and HLW glass production rates. The blended HLW and LAW feed streams undergo a filtration process that separates LAW liquid stream (permeate) from the slurry. The LAW permeate is then processed through the ion exchange (IX) processes discussed below. The concentrated solids slurry is caustic leached (if warranted), washed, and blended before being transferred to the HLW vitrification facility.
- Envelope C feeds contain organic complexants that cause the Sr and some TRU waste to remain in the solution. This waste undergoes a ^{90}Sr/TRU precipitation process before filtration. The filtration step then separates the ^{90}Sr/TRU solids, manganese oxide solids (a byproduct from the precipitation process), and entrained solids from permeate (LAW stream). The ^{90}Sr/TRU precipitate is washed and stored for blending with HLW feed before HLW vitrification. The ^{90}Sr/TRU precipitate (Envelope C solids) are not caustic leached. Envelope C permeates are processed through the IX processes.
- After filtration, the permeate undergoes IX to remove ^{137}Cs and ^{99}Tc. The ^{137}Cs and ^{99}Tc eluates are concentrated by evaporation; it is then blended with pretreated HLW solids before being transferred for HLW vitrification. The last step taken in the pretreatment facility is to concentrate the treated LAW liquid by evaporation prior to transferring for LAW vitrification processing.

The pretreatment building also contains a process vessel ventilation system, an offgas treatment system, and a stack. Liquid effluents are either recycled back into the facility or sent to the Hanford Site liquid effluent retention facility (LERF)/200 Area effluent treatment facility (ETF). Figures 2 and 3 represent an overview of the pretreatment process.

2.3 LAW Vitrification Overview

Treated Envelopes A, B, and C supernatants from pretreatment are processed for LAW vitrification. The LAW vitrification process consists of 2 melter systems operated in parallel. Each melter system has a set of feed preparation vessels, a large-capacity, joule-heated ceramic melter, and an offgas treatment system. The facility also has a secondary offgas system shared by the 2 melter systems. The following description applies to each of the 2 LAW melter systems.

Pretreated LAW waste feeds are received into 1 of 2 common LAW concentrate receipt vessels inside the LAW vitrification building. Batches of concentrated LAW feed are transferred from these vessels to feed preparation vessels, where glass formers and sucrose are added and blended to form a uniform batch of feed to the LAW melters. The slurry feed is transferred to the melter feed vessels, where it is fed continuously to the LAW melters.

Each LAW melter is designed to a nameplate rate of 15 metric tons per day of immobilized low-activity waste (ILAW), and to operate between 950 °C and 1150 °C. The feed enters the melter from the top and forms a cold cap above the melt pool. Volatile components in the feed are evaporated or decomposed, then drawn off through the melter offgas system. Nonvolatile components react to form oxides or other compounds dissolved in the glass matrix. Bubblers agitate the mixture to increase the glass production rate. Finally, an airlift system pours the glass from the melter into stainless steel containers.

Each LAW melter system has its own primary offgas equipment, including a film cooler, submerged bed scrubber (SBS), and wet electrostatic precipitator (WESP). Particulates and condensables, including entrained or volatilized radionuclides in the melter offgas stream, are captured in the SBS and WESP. Condensables from the SBS and the WESP are collected in the liquid effluent system and recycled to the

treated LAW evaporator in the pretreatment facility. The primary offgas systems join after the WESP, and are routed to the secondary offgas system. At this point, the LAW vessel vent header joins the offgas stream. The secondary offgas system provides final filtration, destroys organics, reduces NO_x, and removes halides and mercury. This is done by using high efficiency particulate air (HEPA) filters, a thermal catalytic oxidizer, a selective catalytic reducer, a caustic scrubber, and treated activated carbon beds. Figure 4 provides an overview of the LAW vitrification process.

2.4 HLW Vitrification Overview

The HLW vitrification facility receives the pretreated HLW feed from the pretreatment facility. Treated Envelope D slurry and the LAW intermediate waste products (separated ^{90}Sr/TRU, ^{137}Cs, and ^{99}Tc) make up the feed to the HLW vitrification facility. The HLW vitrification process consists of 2 joule-heated ceramic melters fed by independent feed and blending vessel trains, a dedicated offgas treatment system for each melter, and a common secondary effluent collection system. A common canister receipt system supplies canisters to separate melter pouring systems, providing IHLW to a common product canister decontamination and export system. HLW feed concentrate is transferred from the pretreatment building to the HLW concentrate receipt vessels in the HLW vitrification building. Batches of HLW feed concentrate are transferred to 1 of the 2 melter feed preparation vessels. The feed concentrate is blended with glass-forming chemicals and sucrose, then mixed to ensure a uniform mixture. The melter feed slurry is transferred to the melter feed vessel, where it can be fed to a dedicated HLW melter.

Each HLW melter is designed to operate between 950 °C and 1200 °C at a nameplate rate of 3 metric tons per day IHLW. Melter feed slurry is introduced at the top of the melter and forms a cold cap on the surface of the melt pool. Water and volatile components evaporate or decompose and are drawn off through the offgas system. Nonvolatile components react to form oxides, which become part of the molten glass.

Each HLW melter has a dedicated primary and secondary offgas system where the offgas from the melter passes through a film cooler, submerged bed scrubber (SBS), wet electrostatic precipitator (WESP), high-efficiency mist eliminators (HEMEs), and HEPA filters, to remove particulates and radionuclides. The offgas then passes through a secondary offgas system consisting of recuperative heat exchangers, fans, a thermal catalytic oxidizer, a selective catalytic reducer, a silver mordenite column, and treated activated carbon beds. This secondary system destroys organics, reduces NO_x, and removes halides and mercury.

An airlift system inside the melter pours molten HLW glass into stainless steel canisters. The filled canister is then inspected, the glass sampled (as necessary), and the canister sealed. The canisters from the 2 melters are decontaminated by a nitric acid/cerium (HNO_3/Ce^{+4}) chemical milling process that dissolves a thin layer of the canister outer wall material. Canister decontamination waste effluents are then recycled and transferred to the pretreatment building. Figure 5 provides an overview of the HLW vitrification process.

2.5 Emissions Objective

Figure 6 graphically depicts the objectives of the emissions estimate. For this emissions estimate, it is assumed that the WTP feed streams contain 350 individual constituents of potential concern. An additional 120 products of incomplete combustion (PICs) that could be generated as a result of the treatment process are also considered. The resulting emission rates for 470 constituents from the pretreatment and vitrification processes are estimates.

3 Constituents of Potential Concern

This section provides the bases for selecting the constituents of potential concern (COPCs) analyzed in this report. The WTP emissions estimate scopes 470 COPCs, which were identified through development of the *Final Work Plan for Screening Level Risk Assessment for the WTP* (RPT-W375-EN00001, BNFL 2000). These COPCs were originally selected with consideration to guidance provided in the *Human Health Risk Assessment Protocol for Hazardous Waste Combustion Facilities* (EPA 1998), the *Screening Level Risk Assessment Protocol for Hazardous Waste Combustion Facilities* (EPA 1999), and through interactions with EPA Region 10 and the Washington State Department of Ecology.

The COPC selection criteria identified compounds that fell within one or more of the following categories:

- A compound with the potential to be emitted due to the presence of the compound or its precursors in the waste feed
- A compound that was potentially a product of incomplete combustion
- A compound potentially toxic to humans
- A compound with a propensity for bio-accumulating or bio-concentrating in human and ecological food chains

The 470 COPCs contain chemical and radionuclide constituents, and include compounds not known to be present at detectable concentrations in the actual waste. A total of 304 chemical COPCs associated with WTP feed streams were identified. The chemical COPCs are comprised of 250 organic compounds, 49 inorganic compounds, and 5 criteria pollutants. An additional 120 organic PICs were identified as being potentially formed in the treatment process. The chemical COPCs were compiled using input from the following sources:

- *Regulatory Data Quality Objectives Supporting Tank Waste Remediation System Privatization Project* (Wiemers and others, 1998)
- List of PICs identified in Table A.1, *Human Health Risk Assessment Protocol for Hazardous Waste Combustion Facilities* (EPA 1998)
- Criteria pollutants regulated by the *National Ambient Air Quality Standards* (40 CFR Part 50)

Table 2 lists the 250 organic COPCs and 120 organic PICs. Table 3 lists the 49 inorganic COPCs and the 5 criteria pollutants. In each table, the compounds are sorted using their unique Chemical Abstracts Service (CAS) registry number.

A total of 46 radionuclide COPCs were identified to be associated with WTP feed streams. The radionuclide COPCs were derived from Hanford's best basis inventory and include 16 radionuclides identified as contributing greater than 99.99 % of the radioactivity in the tank waste (Kupfer 1997). Information used to establish the radionuclide inventory originated from key historical records, various chemical flowsheets used in reprocessing of irradiated Hanford Site reactor fuels, and from calculations of radionuclide isotope generation and decay. Table 4 identifies the 46 radionuclide COPCs.

Additional details on the selection of COPCs can be found in Section 4.0 of the *Final Work Plan for Screening Level Risk Assessment for the WTP* (RPT-W375-EN00001).

4 Analysis Tool

The emissions estimate was developed using the WTP project's baseline steady state flowsheet model (SSFM). This flowsheet is representative of the latest WTP design and is constantly being updated to include the latest design bases, requirements, and R&T testing results. The flowsheet tracks the main constituents that are expected to have the biggest impact on the material and heat balance of the plant. The constituents tracked in the flowsheet account for 117 of the constituents of potential concern (COPCs) required to be analyzed, per Section 3. Thus to facilitate the estimation of the rest of the COPCs, several calculations were performed which determined these emission rates based on the results provided by the steady state flowsheet. Section 5 describes this process in detail.

The SSFM tracks the partitioning of the COPCs across the pretreatment and vitrification facilities, and provides a steady state representation of process stream compositions through the WTP. The steady state flowsheet provides an overall material and energy balance with time-averaged flow rates. The SSFM makes it possible to apply the use of simple equipment decontamination factors or more complicated thermodynamic calculations. The SSFM uses the Henry's Law concept to estimate releases of organic compounds from vessel vents within all facilities, and evaporator overheads.

The SSFM is separated into equipment-oriented areas that represent pretreatment and vitrification unit operations. Pretreatment consists primarily of evaporation, precipitation, ultrafiltration, and ion exchange separation processes. LAW and HLW vitrification consist of staging and preparation vessels to prepare the pretreated feed for vitrification. The pretreatment, LAW vitrification, and HLW vitrification unit operations also include offgas treatment, effluent, and recycle streams. In addition, the HLW facility takes into account the recycle from the container decontamination system. Section 7 provides more detail on the flowsheet structure.

A verification and validation process is performed on each version release of the SSFM consistent with NQA-1 requirements and the quality assurance manual (QAM). This emissions estimate was performed on version 2.0 of the steady state flowsheet. Details on this version of the flowsheet can be found in the *Steady-State Flowsheet (ACM) Model Design Document* (24590-WTP-MDD-PR-01-003).

5 Representative Constituents in the Emissions Analysis

An approach for correlating the emission rates for compounds included in the SSFM with the remaining COPCs was established with consideration to physical properties, chemical class, and feed concentration. This approach for selecting representative compounds and applying the SSFM results to determine the rate for constituents not tracked in the flowsheet is described in the following sections.

5.1 Selection of Representative Organic COPCs

A subset of the organic COPCs was selected to represent the larger list of organic COPCs in the SSFM. In total, 51 of the 250 organic feed COPCs were selected. The basis for selection of these compounds is discussed below. The SSFM was not used to estimate PICs as these were estimated in a dedicated calculation. The methodology for addressing PIC emissions is described in Section 8.4.

Henry's Law constants were compiled for all of the feed organics. The *Vessel Vents and PJM/RFD Emissions* (RPT-24590-EN00001) document shows the compilation process for these Henry's Law constants. These constants were divided into 29 groups based upon closeness of numerical values within

a group. An additional 6 subgroups were added to differentiate between particle and vapor phase within assessment groups. Constituents from each of these groups were selected for analysis using the SSFM.

To supplement constituents selected based upon Henry's Law, additional compounds were selected based upon physical properties including boiling point, offgas phase, and solubility. Specifically, the constituent boiling points (bp) were classified as 1 of the following 3 groups:

- Volatile (bp < 100 °C)
- Semi-volatile (100 °C < bp < 300 °C)
- Nonvolatile (bp > 300 °C)

Likewise, the offgas phases were classified as 1 of the following 2 groups:

- Vapor phase
- Particle (or particle-bound) phase

The organic aqueous solubility was classified as 1 of the following 2 groups:

- Insoluble (solubility in water < 0.01 g per 100 ml)
- Slightly soluble/soluble (solubility in water ≥ 0.01 g per 100 ml)

Constituents representing the applicable combinations of these physical properties (such as semi-volatile, particle phase, and insoluble compounds) were included as constituents for analysis.

Several additional compounds were selected to ensure that each of the following 13 chemical families were represented:

- Aromatic halogenated hydrocarbons
- Aromatic non-halogenated hydrocarbons
- Non-aromatic non-halogenated hydrocarbons
- Non-aromatic halogenated hydrocarbons
- Dioxin and furan compounds
- Polychlorinated biphenyls (PCBs)
- Phthalates
- Light polycyclic aromatic hydrocarbons; molecular weight (MW) less than 200 g per mole (g/mole)
- Heavy polycyclic aromatic hydrocarbons (MW greater than 200 g/mole)
- Light substituted benzene compounds (MW less than 200 g/mole)
- Other light semi-volatile organic compounds (SVOCs) (MW less than 200 g/mole)
- Other heavy SVOCs (MW greater than 200 g/mole)
- Herbicides and organochlorinated pesticides

Table 2 identifies the organic COPCs that were selected for analysis using the SSFM based upon the criteria and rationale discussed above. WTP has produced an engineering calculation that arrives at

emission rates for the organic constituents not included in the SSFM. The calculation is entitled *Estimation of Non-SSFM Represented Organic Emission Rates Required to Support the Integrated Emissions Baseline Report* (24590-WTP-M4C-FRP-00005). This calculation is included in Appendix B of this report.

5.2 Selection of Representative Inorganic, Radionuclide, and Criteria Pollutant COPCs

The radionuclide and inorganic constituents currently tracked in the steady state flowsheet comprise about 70 % of the total inorganic and radionuclide constituents analyzed in this report. Specifically, the SSFM tracks 35 out of 49 of the inorganic constituents and 28 out of 46 radionuclide constituents. Tables 3 and 4 identify the list of inorganic and radionuclide constituents that were analyzed with the SSFM. The WTP project has produced an engineering calculation that arrives at emissions rates for the inorganic and radionuclide constituents not included in the SSFM. The calculation is entitled *Integrated Emissions Baseline Report Non-SSFM Represented Constituents Emissions Rate Estimation* (24590-WTP-M4C-FRP-00003), and is included in Appendix C of this report.

Of all the inorganic, radionuclides, and criteria pollutants, the only ones that are not estimated for this analysis are ozone, bromide, and iodine (I_2). Ozone is usually produced by passing an electrical discharge through O_2 gas or through dry air. Based on current process design, ozone is not expected at the WTP and, therefore, is not presented in this emission estimate. The presence of bromide is known to lead to very rapid corrosion of carbon steel tanks. This constituent is prohibited from Hanford tank wastes and no process history for its introduction exists. Bromide is, therefore, not presented in this emissions estimate. Non-radioactive iodine is not tracked as a constituent in the Hanford best basis inventory. The emissions estimate based the iodine inventory in the tanks as being entirely radioactive iodine-129 (^{129}I).

5.3 Application of Representative Organic COPCs

As stated in Section 5.1, the existing process and emissions analysis configuration is dependent on Henry's Law, boiling point, phase type, and, to a lesser extent, solubility. As intended by the grouping methods described above, constituents within the same organic group are expected to behave similarly in the process. As such, the emission rates are expected to be a linear function of the feed rates as shown below:

$$emission\ rate_2 = \frac{emission\ rate_1 \cdot [concentration]_2}{[concentration]_1} \cdot (LAW + HLW[\text{feed rate}])$$

Organic treatment groups included in the SSFM were reallocated to differentiate particle and vapor phase treatment for 6 of the 29 Henry's Law groupings (see Section 5.1). The mean treatment difference for these 6 groups provides a correction factor for constituents not estimated using the SSFM.

5.3.1 Estimation of Coplanar PCB Emissions

The feed organic compounds listed in Table 2 include 14 coplanar PCB congeners. Coplanar PCBs have 4 or more chlorine atoms with few substitutions in the ortho positions. The rings can rotate into the same plane if not blocked from rotation by ortho-substituted chlorine atoms and, in this coplanar configuration, exhibit dioxin-like properties. For the purpose of the emissions estimate, the 14 coplanar PCBs comprise 1 % of the total PCB emissions concentration. This basis is consistent with EPA guidance regarding PCB emissions from combustion facilities (EPA 1998). Assuming that 1 % concentration is evenly distributed across the 14 coplanar compounds, an individual coplanar PCB emission rate is calculated as 1/14 of 1 % of the total PCB emissions from each of the WTP process flues. Total PCBs are represented in the SSFM by the Chemical Abstracts Service (CAS), registry number 1336-36-3.

5.4 Application of Representative Inorganic and Radionuclide COPCs

As described in Section 5.2, the baseline SSFM tracks 35 of the 49 inorganics and 28 of the 46 radionuclides. The emission rates for compounds not estimated using the SSFM are based on the emission rate of a representative analyzed compound that is chemically or physically similar. This is achieved by using a performance factor (PF) of the representative compound calculated by the following equation:

$$PF = \frac{\text{mass rate at point of interest [representative compound]}}{\text{mass rate at waste feed [representative compound]}}$$

The "mass rate at the point of interest" refers to the mass rate of a representative compound at various points in the process train, such as at the plant stack or the unabated emission to each offgas treatment unit. The "mass rate at waste feed" refers to the mass rate of each representative compound in the SSFM analyzed waste feed. The mass rate for the waste feed in the above equation is the sum of HLW and LAW feed rates for the compound. The PF is assumed to be the same for the associated compounds that are not part of the baseline SSFM.

The emission rates of the compounds that are not part of the baseline SSFM can also be determined using the following methods, when appropriate.

When an elemental radionuclide form is analyzed with the SSFM, it will be used to estimate the non-radioactive element. For example, the emission rates for cobalt (Co) will be the same as the emission rates for ^{60}Co. The emission rate for uranium (U) will be the same as the overall uranium radionuclide emissions analyzed (^{233}U, ^{234}U, ^{235}U, and ^{238}U).

Additionally, when a parent radionuclide form is analyzed, it will be used to determine its decay products. For example ^{90}Y and ^{137m}Ba are decay products of ^{90}Sr and ^{137}Cs, respectively. Therefore, the emission rates of the decay products will be estimated based on the respective activity ratio to the parent radionuclides. This approach is particularly conservative with respect to strontium and cesium decay during processing, as these decays are β transitions that increase the valence (oxidation capability), thereby increasing the stability of the material within solid phases (such as vitrified product).

The following sections describe the selection of representative compounds for inorganic and radionuclide COPCs. Table 5 provides the representative constituents for these COPCs.

5.4.1 Representative Inorganic COPCs in the SSFM

The inorganics constituents were categorized into non-volatile, semi-volatile, and volatile inorganics. The emission rates for zirconium (Zr) was used to estimate the emission rates for non-volatile inorganics, such as rhodium (Rh), tantalum (Ta), tungsten (W), vanadium, and beryllium (Be). This approach was based on the following:

1) The primary mechanism for non-volatiles to enter the melter offgas and vessel vent system stream is through entrainment, which is not specific to chemical species.
2) The decontamination factors (DFs) for the HLW and LAW offgas treatment equipment are determined based on the average of the particle size distributions of aluminum (Al), iron (Fe), and Zr.

For semi-volatile and volatile inorganics, such as molybdenum (Mo), thallium (Tl), and selenium (Se), the DFs that were reported in engineering calculations (24590-WTP-MKC-50-00004) were compared to other analyzed semi-volatile and volatile elements. The elements with the most comparable overall DFs are used as the representative elements.

5.4.2 Representative Radionuclide COPCs in the SSFM

A methodology similar to that applied to the inorganic COPCs has been applied to the radionuclide constituents. The emission rate for zirconium is used to estimate the emission rates for non-volatile radionuclides, such as radium-226 (^{226}Ra), protactinium-231 (^{231}Pa), actinium-227 (^{227}Ac), radium-228 (^{228}Ra), and niobium-93m (^{93m}Nb).

For semi-volatile and volatile radionuclides, the DFs that were reported in the engineering calculations (24590-WTP-MKC-50-00004) were compared to other analyzed semi-volatile and volatile elements. The elements with the most comparable overall DFs were used as the representative elements.

6 Process Flowsheet Condition

The baseline steady state flowsheet provides WTP material and energy balance information and data. This flowsheet is also the tool to provide the WTP emissions profile used to support environmental air permitting and risk assessment activities. Even though the same flowsheet is used, parameters used for generating emissions estimates differ from the ones used for baseline plant performance. The operating parameters within the unit operations remain the same (operating temperatures and pressures, for example). The major differences between the parameters are found in the feed vector, equipment performance (decontamination factors), and plant throughput rates. The DFs and throughput rates utilized for the WTP material and energy balance provide the best realistic conditions for plant operations. The DFs and throughput rates used for this emissions estimate conservatively estimate plant operation, which bounds plant emissions for regulatory concerns.

For a complete detail of operating conditions for each unit operation within the WTP, refer to Sections 2 (Pretreatment), 3 (LAW), and 4 (HLW) of the *Flowsheet Bases, Assumptions, and Requirements* (24590-WTP-RPT-PT-02-005). Conditions used for this emissions profile, including throughput rates, feed vector, and equipment DFs, are presented in Section 8 of this report.

7 Flowsheet Description and Emissions Analysis

This section provides an overview of the setup and structure of the flowsheet and how the emissions analysis is performed. For a detailed description of the depiction of the WTP flowsheet using the ACM software, refer to the *Steady State Flowsheet (ACM) Model Design Document* (24590-WTP-MDD-PR-01-003).

7.1 Flowsheet Description

A description of the setup and structure of the flowsheet is described below.

7.1.1 Inputs

The SSFM uses a large number of input (constrained) variables to specify the values within the equation matrix. The constrained variables fall into 2 categories: parameters and fixed variables. Parameters typically include constant properties such as DFs. Fixed variables include the operating conditions that define how the process operates.

7.1.2 Tracking of Constituents

The flowsheet is constructed to track non-radioactive and radioactive elements in solid, aqueous, and vapor phases. For tracking purposes, the components entrained in a vapor stream are considered to be part of the solid array. Overall conservation of mass is applied throughout the flowsheet.

7.1.3 System Structure

The overall WTP process has been divided in 30 systems common to the flowsheet. Detailed information on how the flowsheet is constructed for these 30 systems can be found in Section 4 of the *Steady State Flowsheet (ACM) Model Design Document* (24590-WTP-MDD-PR-01-003).

7.1.4 Flowsheet Structure

The steady state flowsheet model is comprised of 1 single flowsheet encompassing the entire process. Portions of that flowsheet represent the modeling of specific unit operation and systems. Within the steady state flowsheet model there are 38 independent custom modules. These modules serve as building blocks that are assembled to model the process. The major plant systems are characterized by either a single module or a combination of modules. Within the individual modules reside the equations which serve to define the processes. The modules are comprised of visual basic type code defining the mathematical relationship between the fixed variables, the parameters, and the other calculated values based on engineering principles. The modules are connected by streams through which they transfer information defining the properties pertaining to the streams. Collectively, the modules and streams make up the plant systems, which ultimately define the overall process.

7.2 Emissions Analysis

A description of the areas from the WTP flowsheet pertinent to the emissions analysis and methods used to generate the emissions profile is presented below.

7.2.1 Pretreatment Emissions Analysis

The pretreatment facility offgas systems are shown in Figure 2. The pretreatment vessel vent system provides the abatement for offgases from pretreatment process vessels and equipment. The pulse-jet ventilation (PJV) system controls emissions from the exhausts of pretreatment fluidic devices, such as pulse-jet mixers (PJMs) and reverse flow diverters (RFDs). Each system discharges to the pretreatment stack through separate headers.

Purge air supplied to pretreatment process vessels for hydrogen mitigation is collected and treated by a caustic scrubber, HEME, 2 stages of high efficiency particulate air (HEPA) filtration, thermal oxidizer, and carbon bed adsorber prior to discharge through the pretreatment stack. Offgases from pretreatment process equipment, such as evaporator overheads, are also collected and treated by the pretreatment vessel vent system.

PJMs are used throughout the pretreatment facility to re-suspend solids in process vessels and to disperse mixtures before sampling process liquids. RFDs are used for liquid transfers and collecting samples of process liquids. Both PJMs and RFDs are fluidic devices that use compressed air to draw process liquid into a charge vessel, located within the process vessel, and then force the liquid back out to achieve the desired operation. The exhaust air from these operations, along with entrained aerosols, are collected and treated by medium efficiency mist eliminators, or demisters, and 2 stages of HEPA filtration prior to discharge through the pretreatment stack.

Sections 7.2.1.1 through 7.2.1.3 describe the emissions analysis methods for pretreatment facility emissions associated with:

- Vessel vent exhaust
- Evaporator overheads
- RFD/PJM exhaust

7.2.1.1 Vessel Vent Exhaust

The exhaust from the vessel vent system consists of the purge air supplied to pretreatment process vessels for the purpose of controlling radiolytic hydrogen generation within the vessel vapor space. In addition to increasing in temperature and moisture content, the purge air also becomes contaminated as it passes through the vessel vapor space. Mixing, sparging, radiolytic hydrogen generation, process transfers, and evaporation contribute to the release of aerosols and particulates into the vessel vent offgas stream.

A liquid entrainment factor has been calculated for several process vessels based on *PT Vessel Vent System Baseline Operating Conditions and Radioactive Aerosol Loading of Exhaust Air Stream* (RPT-W375PT-PR00021). These entrainment factors are listed in Table 2.13-3 of the *Flowsheet Bases, Assumptions and Requirements* document (24590-WTP-RPT-PT-02-005). From the entrainment factor for inorganics and radionuclides, the quantity of a constituent in the vessel vent offgas stream can be determined by multiplying the quantity of the constituent entering the vessel in the liquid phase by the entrainment factor for that vessel. The quantity of organics in the offgas stream is determined through the application of Henry's Law, which estimates the equilibrium gas phase concentration of a compound from the known liquid phase concentration (RPT-24590-EN00001, *Vessel Vents and PJM/RFD Emissions*). Henry's Law constants used for the organic constituents are presented in Table 2. The Henry's Law method was used throughout the vessel vent systems (both pretreatment and vitrification plants) and evaporator systems in the flowsheet to calculate the organic emission releases. The constants were developed on the basis that operating conditions on the vessels are near standard temperature and pressure conditions, thus the Henry's Law constants at standard conditions are used. Details on selection of the Henry's Law constants can be found in Section 5 of the report titled *Vessel Vents and PJM/RFD Emissions* (RPT-24590-EN00001).

The pretreatment vessel vent thermal oxidizer is designed for a minimum operating temperature of 1,600 °F (24590-PTF-M0C-PVP-00001) and could potentially generate products of incomplete combustion (PICs). For purposes of the emissions analysis, PICs are defined as compounds identified in Table A-1 of the *Human Health Risk Assessment Protocol for Hazardous Waste Combustion Facilities* (EPA 1998), but are not components of the waste feed. It has been conservatively established for emissions estimation purposes that PICs are present at the pretreatment stack at their estimated detection limits. The rationale and discussion for this basis are provided in Section 8.4.

7.2.1.2 Evaporator Overheads

The pretreatment facility contains 4 evaporators to reduce the volume of certain streams prior to further processing steps. These evaporators are associated with the following process streams:

- Waste feed
- Cesium eluate
- Technetium eluate
- Treated LAW

Each evaporator is analyzed under continuous operation at a pressure of 1.0 to 1.5 psia. The reduced pressure lowers the boiling point of the process stream. The waste feed and treated LAW evaporator overheads are routed to primary condensers, where most of the vapor is condensed at the saturation pressure. Contaminant removal by the evaporators and condensers are estimated using DFs. Tables 2.2-1, 2.2-2, and 2.2-3 of *Flowsheet Bases, Assumptions, and Requirements* provide the waste feed evaporator and condenser DFs. The treated LAW evaporator and condenser DFs are provided in Tables 2.12-1, 2.12-2, and 2.12-3 of *Flowsheet Bases, Assumptions, and Requirements*.

The vapor stream from the cesium and technetium evaporators enters the rectifier columns prior to the primary condensers. Tables 2.6-1 and 2.8-1 of *Flowsheet Bases, Assumptions, and Requirements* provide the decontamination factors for the cesium and technetium evaporators/rectifiers, respectively. Non-condensable vapors from all 4 evaporators join the vessel vent header prior to the offgas treatment system as shown in Figures 2 and 3. For the purpose of the analysis, the evaporator/condenser overheads are considered to be saturated air containing entrained evaporator liquid.

Section 8.6 contains additional information regarding emissions analysis specific equipment decontamination factors.

7.2.1.3 RFD and PJM Exhaust

Both RFDs and PJMs work by using compressed air to raise and lower process fluid in a charge vessel located inside the process vessel. One end of the charge vessel is connected to a jet pump pair that provides the suction for drawing liquid up into the charge vessel and the drive for forcing the liquid back out of the charge vessel. At the end of the drive phase, residual compressed air in the charge vessel passes back up through the jet pump pair and into the PJV system header. Significant quantities of compressed air are exhausted through the jet pump pair during the suction and vent phases. Liquid aerosols and radiolytic particulates will become entrained in the exhausts from the jet pump pair via the charge vessel. For organic, inorganic, and radionuclide constituents, an aerosol entrainment factor of 1×10^{-5} has been used to calculate the amount of process liquid in the charge vessel that is transferred to the exhaust stream (*Flowsheet Bases, Assumptions, and Requirements*, Section 2.14.3.2).

7.2.2 LAW and HLW Vitrification Emissions Analysis

The LAW and HLW vitrification facilities have devoted offgas systems for controlling emissions. Additional detail regarding the vitrification facilities is provided below.

7.2.2.1 LAW and HLW Melters

For the melters, the feed enters from the top and forms a cold cap above the melt pool. Volatile and semivolatile compounds are evaporated or decomposed, then drawn off through the melter offgas system. Nonvolatile compounds react to form oxides or other compounds dissolved in the glass matrix. Behavior

in the melter is represented in the flowsheet by chemical reactions and application of DFs. A complete list of reactions occurring in the melters can be found in Sections 3.2 for LAW and 4.2 for HLW in the *Flowsheet Bases, Assumptions, and Requirements*. Specific DFs used for emissions analysis for the melters are presented in Section 8.6 of this report.

7.2.2.2 Vitrification Scrubbers

The submerged bed scrubber (SBS), in both HLW and LAW, and the LAW Caustic Scrubber behavior in the flowsheet is also represented by operating conditions, occurring chemical reactions, and DFs applied. For a listing of chemical reactions and operating conditions refer to Section 3.3 for LAW and 4.3 for HLW of the *Flowsheet Bases, Assumptions, and Requirements.* Specific DFs used for emissions analysis for all 3 scrubbers are presented in Section 8.6 of this report.

7.2.2.3 Remaining Vitrification Offgas Unit Operations

The remainder of the unit operations' behavior in the offgas systems (WESP, HEME – HLW only, thermal catalytic oxidizer, selective catalytic reducer, silver mordenite – HLW only, and treated activated carbon beds) is represented by applying pertinent DFs. Some chemical reactions also occur in these units. For example, in the thermal catalytic oxidizer, SO_2 is oxidized to SO_3, and CO is oxidized to CO_2. For a listing of chemical reactions and operating conditions for all these units refer to Sections 3.3 for LAW and 4.3 for HLW of the *Flowsheet Bases, Assumptions, and Requirements.* Specific DFs used for emissions analysis for all these units are discussed in Section 8.6 of this report.

7.2.2.4 LAW and HLW Vessel Ventilation Systems

The exhaust from the vessel vent system consists mainly of air inleakage and instrument air addition to process vessels. This air becomes contaminated as it passes through the vessel vapor space. Mixing, sparging, radiolytic hydrogen generation, process transfers, and evaporation contribute to the release of aerosols and particulates into the vessel vent offgas stream.

A liquid entrainment factor has been calculated for all process vessels based on calculations CALC-W375LV-PR00022, Rev 2 *System 234 LAW Vessel Ventilation Calculation,* and CALC-W375HV-PR00033, Rev 1 *HLW Vessel Ventilation Calculation*. These entrainment factors are listed in Sections 3.3.3.3 (LAW) and 4.3.3.3 (HLW) of 24590-WTP-RPT-PT-02-005, *Flowsheet Bases, Assumptions, and Requirements*. From the entrainment factor for inorganics and radionuclides, the quantity of a constituent in the vessel vent offgas stream can be determined by multiplying the quantity of the constituent entering the vessel in the liquid phase by the entrainment factor for that vessel. The quantity of organics in the offgas stream is determined through the application of Henry's Law, which estimates the equilibrium gas phase concentration of a compound from the known liquid phase concentration.

7.2.2.5 HLW PJM/RFD Exhaust

These units have been represented identically as the ones in Pretreatment described in Section 7.2.1.3.

8 Emissions Analysis Bases

As stated in Section 6, the differences between the baseline design and the emissions case analyzed in the SSFM are the throughput rates, DFs, and feed vector. This section outlines the bases for the emissions case. All of this information can also be found in Section 7 of the *Flowsheet Bases, Assumptions, and Requirements* (24590-WTP-RPT-PT-02-005).

8.1 Throughput and Operating Conditions

The previous emissions analysis reflected an ILAW production rate of 50 metric tons of glass per day and an IHLW production rate of 3 metric tons per day. This was based on the previous WTP configuration of 3 LAW melters and 1 HLW melter. Although the configuration of melters has changed to 2 LAW melters and 2 HLW melters, an ILAW production rate of 50 metric tons per day has been retained for the emissions analysis. This ensures that the emissions profile is bounding from a melter perspective. With the addition of a second HLW melter, the production rate for IHLW has been set at 6 metric tons per day for emissions analysis.

8.1.1 Feed Conditions

LAW feed envelopes fall within a range from 4 to 10 moles of sodium per liter. The lower sodium molarity feeds will be processed by the WTP at a higher rate. In order to bound the emissions estimate, the WTP feed is set at a 4 molar sodium concentration.

8.1.2 Pretreatment Facility Conditions

During normal operations, any feed that enters the pretreatment plant with a sodium molarity of 5 molar or higher bypasses the feed evaporator. To conservatively maximize emissions from the pretreatment facility the sodium molarity of feed streams was set at 4 molar sodium, as stated in Section 8.1.1.

Operating conditions for all other systems in the pretreatment facility are as stated in Section 2 of the *Flowsheet Bases, Assumptions, and Requirements* (24590-WTP-RPT-PT-02-005). Conditions are similar to those stated for processing an Envelope A waste. No leaching occurs in the emissions analysis as administrative controls will be set in the pretreatment facility to stop the delivery of any feed that is out of the specified LAW source term. Treated LAW feed is delivered to the LAW facility at an 8 molar sodium concentration.

8.1.3 LAW Facility Conditions

Operating conditions for all the systems in the LAW facility are as stated in Section 3 of the *Flowsheet Bases, Assumptions, and Requirements* (24590-WTP-RPT-PT-02-005). LAW waste oxide loading in the glass was set at 20 % to maximize melter emissions as this is considered to be the upper bound waste loading expected in the ILAW at this time. Nominal operating range will be between 14 % and 17 %. LAW waste oxide loading is defined as the weight of sodium oxide (Na_2O) to the total weight of waste and glass formers.

8.1.4 HLW Facility Conditions

Operating conditions for all the systems in the HLW facility are as stated in Section 4 of the *Flowsheet Bases, Assumptions, and Requirements* (24590-WTP-RPT-PT-02-005). HLW waste oxide loading in the glass was set at 40 % to maximize melter emissions, as this is considered to be the upper bound waste loading expected in the IHLW at this time. Nominal operating range will be between 30 % and 35 %. HLW waste oxide loading is defined as the weight of waste oxides to the total oxides and glass formers.

8.2 Feed Concentration for Organic Compounds

Organic characterization data applicable to the organic COPCs from candidate double-shell tank system feed streams is not completely available. To compensate for data gaps, an approach for establishing a conservative, bounding basis for hazardous organic concentrations was used. The approach, which relies

on previous analytical work relating to total organic carbon (TOC) in the double-shell tanks, process knowledge, and hazardous organic analyses, is summarized below.

Based on maximum TOC analyses from double-shell tanks scheduled for processing during the first 11 years of operation and the WTP's contractual limit for TOC, a value of 4 wt. % TOC was used for this analysis. Non-regulated organics, such as complexants and low molecular weight acids (Campbell and others 1995), have been measured between 78 % and 99 % of TOC. These results are biased low, as the analysis methods do not adequately address most paraffins and many phosphates. For the purposes of this analysis, 87.5 % was used to represent a minimum proportion of unregulated organic content, and the remainder assumed to be regulated chemicals. The TOC concentration includes the hazardous organic COPCs and other non-regulated organic compounds that were used in Hanford processes. More specifically, the origins of organic compounds in Hanford tanks are associated with one of the following:

- Process additions (such as complexants and solvent extractants)
- Laboratory wastes
- Decontamination solutions
- Other minor additions

With the exception of process additions, few records exist about the amount of organic compounds added to the tanks. As part of the safety programs for the tanks, Hanford personnel have conducted a number of studies that focused on accounting for the predominant contributors to the historically measured TOC values. The studies have shown that the process additions, particularly the complexants, and their associated degradation products comprise the majority of the organic compounds in the tanks. Specifically, the predominant organic complexants used in the Hanford processes include ethylenediamine tetraacetate (EDTA), hydroxyethylenediamine triacetate (HEDTA), glycolate, and citrate. Lesser amounts of complexants, such as nitrilotriacetic acid (NTA), di-(2-ethylhexyl) phosphoric acid, and oxalic acid, were used. The degradation products from the complexants are low molecular weight materials whose parent acids include formic, acetic, glycolic, oxalic, succinic, and citric acids.

The 12.5 % of TOC that was not accounted for as complexants has been distributed across the organic COPCs using the analytical results performed on 2 representative tanks (Klinger and others 1999). To compensate for data uncertainty, a scaling factor was applied. This factor was determined by summing the concentrations of compounds that were detected with those compounds that were undetected (assumed to be present at their detection limit) and dividing 12.5 % of the TOC by this sum. This resulted in a scale factor of approximately 280. The increased values have been used as feed concentrations in the emissions estimate. A complete list of the resulting feed concentrations is included in Table 6.

8.2.1 Feed Concentration for Polychlorinated Biphenyls

The Hanford double-shell tanks are known to contain polychlorinated biphenyl remediation waste that will be included in the mixed waste feed processed by the WTP. The list of organic COPCs identified in Table 4 includes the PCBs scoped by this emissions estimate.

DOE and its contractors have been working with EPA and Ecology to resolve regulatory issues associated with managing PCB remediation waste at the WTP. On 31 August 2000, DOE, EPA, and Ecology signed the *Framework Agreement for Management of Polychlorinated Biphenyls (PCBs) in Hanford Tank Waste* (DOE and others 2000). This agreement establishes that the waste feed to the WTP be limited to 50 parts per million PCBs. The agreement does not specify whether this concentration applies to the liquid fraction, the solid fraction, or both.

Solubility information for polychlorinated biphenyl compounds indicates that they are essentially insoluble in water. Specifically, data are available indicating solubilities that range from 1.3E-06 to 5.7E-8 g/100 mL of water (Howard and others 1997). In applying the PCB feed criteria specified in the *Framework Agreement*, it has been assumed that the 50 parts per million by weight would be most appropriately applied to Envelope D HLW feed streams, as Envelope D is principally comprised of undissolved salt and oxide solids. The emissions estimate has thus assumed a HLW feed concentration for total PCBs of 50 mg/kg. The LAW feed concentration for total PCBs was established using the same methodology as that described in Section 8.2 for other organic COPCs. This concentration (0.65 mg/L) has been used for LAW feeds and is bounding considering the near insolubility of PCBs in aqueous salt solution.

8.3 Feed Concentrations for Inorganic and Radionuclide Compounds

Feed concentrations for inorganic and radionuclide compounds were based on 2 main sources as of September 2002: the WTP statement of work (SOW), and the best basis inventory (BBI). SOW maximum concentrations were used for all constituents (both inorganic and radionuclide) that had a specified value. For those that did not have a specified value, the BBI data was used to estimate the feed concentration. BBI data was downloaded from the TWINS database (http://twins.pnl.gov:8001/twins.htm) for all the WTP Phase I tanks. The WTP Phase I tanks are defined as follows (24590-WTP-M4C-FRP-00001):

LAW

- AP-101 supernate
- AZ-101 supernate
- AZ-102 supernate
- AN-102 supernate
- AN-104 salt cake and supernate
- AN-107 supernate
- AN-105 salt cake and supernate
- SY-101 supernate
- AN-103 salt cake and supernate
- AW-101 salt cake and supernate
- AP-104 supernate

HLW

- AZ-101 solids
- AZ-102 solids
- AY-102 solids
- C-106 solids
- AY-101 solids
- C-104 solids
- SY-102 solids
- C-107 solids
- AW-104 solids

The maximum concentration of each constituent from all of the evaluated tanks was selected and used as the feed concentration for the emissions analysis.

This selection process and the determination of the final emissions analysis feed vector can be found in the *Updated Emissions Run Feed Vector* (24590-WTP-M4C-FRP-00001). This calculation is attached in Appendix D of this report. A summary of the inorganic and radionuclide feed vector selected is included in Table 7 for LAW feed and Table 8 for HLW feed.

8.4 Concentration of Products of Incomplete Combustion

The list of COPCs discussed in Section 3 includes 120 products of incomplete combustion (PICs) that are not known or suspected to be components of the WTP feed streams. These constituents have been included based upon their potential to be formed within thermal components of the WTP process; specifically, the vitrification melters and thermal oxidizing components of the offgas treatment system. The subject PICs are comprised of volatile and semi-volatile compounds. The semi-volatile compounds include a subset of polycyclic aromatic hydrocarbons (PAHs), dioxins, and furans that are of particular interest to risk assessment.

EPA's *Human Health Risk Assessment Protocol for Hazardous Waste* (EPA 1998) provides guidance for establishing emissions estimates for facilities that are not yet operational. The guidance states the following:

> Good engineering practice dictates a check of, and comparison with, data from similar existing units. Stack test reports for facilities of similar technology, design, operation, capacity, auxiliary fuels, waste feed types, and air pollution control standards (APCSs) should be used to estimate COPC emission rates for new facilities that have not been constructed.
>
> If the preferred option of using surrogate data from similar facilities is not available, some state environmental agencies enforce emission rate limits based on state laws. Since these limits cannot be exceeded, they can be used to develop emission rate estimates for the risk assessment. The facility will demonstrate that its emissions are less than those considered in the permit and risk assessment during the trial or risk burn.

The EPA guidance has been utilized in selecting the method for estimating PIC emissions at the WTP. There have been 2 mixed waste treatment facilities in Washington and Idaho that have pursued regulatory permits that include human health and ecological risk assessment similar to that required for the WTP. Although neither facility has been operated to date, they have been used as precedents for estimating PIC emissions resulting from the treatment process. In the cases of both precedent facilities, emission rates for PICs were estimated by multiplying the PIC detection limit (or in some cases, one-half the detection limit) by the air flow rate at the stack sampling location. A similar methodology has been used to estimate PIC emissions at the WTP; here, PIC emission rates are based upon the assumption that each PIC will be present in the process flue at its corresponding analytical detection limit.

In order to establish a basis for achievable stack detection limits, available R&T data was reviewed. Tests were conducted at the Vitreous State Laboratory (VSL) of the Catholic University of America. These tests were performed on a small-scale vitrification system with WTP simulants that were spiked with selected hazardous organic compounds. The tests were conducted to assess destruction efficiencies in the melter and collect data on hazardous constituents in the offgas stream, including PICs. A total of 24 tests were conducted to study the effects of various parameters on hazardous organics emissions. These parameters included feed type, residence time, cold-cap coverage, plenum temperature, and presence of sugar as a reductant.

The VSL melter exhaust was sampled and monitored for volatiles, semivolatiles, dioxins, and furans. EPA SW-846 Method 0030 was used to sample volatile constituents from the offgas stream. The volatile samples were analyzed using Method 8260-B. Semivolatile analytes were sampled using Method 0010, and analyzed using Method 8270-C. Dioxins and furans were sampled using 40 CFR 60 Method 23, and analyzed using Method 8290. Details of the small-scale melter testing and results are documented in the *Determination of the Fate of Hazardous Organics During Vitrification of WTP LAW and HLW Simulants* (VSL 1999).

Assumed detection limit concentrations have been applied based upon 4 groupings of compounds: volatile organics, semi-volatiles, polycyclic aromatic hydrocarbons, and dioxins/furans. The detection limits reported from the VSL work should be conservative from an emissions perspective because the test work was not intended to drive detection limits to the lowest achievable levels. If longer sample durations and high resolution analytical techniques are used, it is expected that lower detection limits could be achieved. A summary of the resulting detection limit concentrations for the volatile, semivolatile, and polycyclic aromatic hydrocarbon groupings are shown in Table 9. Detection limits for each of the individual dioxin and furan compounds are also specified in Table 9. The concentrations of PICs shown in Table 9 have been multiplied by the volumetric flowrate for the applicable process flues to produce the individual PIC emission rates that are summarized in the calculation entitled *Integrated Emissions Report PIC Estimation* (24590-WTP-M4C-FRP-00002). This calculation is included in Appendix E of this report.

8.5 Phase Allocation of Constituents of Potential Concern

For the purpose of the emissions analysis, the COPCs are partitioned to the vapor phase, particle phase, or particle-bound phase. Vapor phase emissions are those emitted as volatile gases. Particle-phase emissions are particulate constituents (generally metals or other inorganics). Particle-bound emissions are volatile or semi-volatile constituents that are bound to other particles.

The phase type for each COPC is determined based on a partitioning factor, *Fv*, as provided in the methodology published in the draft *Human Health Risk Assessment Protocol for Hazardous Waste Combustion Facilities* (EPA 1998). The *Fv* is defined as follows:

$$Fv = 1 - \frac{cS_t}{p_l + cS_t}$$

where:

c is Junge constant [1.7×10^{-04} atmospheres-centimeter (atm-cm)]

p_l is liquid phase vapor pressure of compound (atm)

S_t is Whitby's average surface area of particles (3.5×10^{-06} cm^2/cm^3 air)

As shown in the above equation, as the vapor pressure increases, the *Fv* would approach 1. The following criteria (EPA 1998) are used to aid the determination of phase types:

- *Fv* is less than 0.05: the compound is particle phase
- *Fv* is equal to 1.0: the compound is vapor phase
- *Fv* is less than 1.0 but greater than or equal to 0.05: the compound is particle-bound phase

For the WTP emissions analysis, the COPCs were evaluated for *Fv* at ambient conditions (25 °C, atmospheric pressure). Where available, the *Fv* values for individual COPCs were taken directly from the EPA guidance document entitled *Human Health Risk Assessment Protocol for Hazardous Waste*

Combustion Facilities (EPA 1998) or an errata to the Human Health Risk Assessment Protocol for Hazardous Waste Combustion Facilities (HHRAP) that revised certain selected data (EPA 1999a). *Fv* values for the remaining COPCs were estimated using the equation defining *Fv* (shown above) and liquid phase vapor pressure data collected for the individual COPCs. Tables 2, 3 and 4 provide the phase types for organic, inorganic and radionuclide COPCs, respectively. The methodology used to establish constituent phase is summarized in *Phase Determination for COPCs Potentially Emitted from the Hanford Tank Waste Treatment and Immobilization Plant (WTP)* (CCN #057415). This document is included as Appendix F of this report, and lists the *Fv* values for each COPC, including the vapor pressure data used for the estimates.

8.6 Equipment Decontamination Factors

For the emission analysis, decontamination factors (DFs) are used to predict the removal of COPCs by the offgas treatment systems. As shown in the following equation, the DF is a function of removal efficiency (η).

$$DF = \frac{1}{1-\eta}$$

The equipment DFs are established based on the following information sources:

- Available experimental or treatability study data
- Available engineering calculation on decontamination factors
- Offgas phase allocation of COPCs (see Section 8.5)
- Vendor literature

The SSFM has DFs for unit operations based on nominal operating conditions. These DFs provide the best realistic performance to be expected from the unit operations. For emissions purposes, the design basis DFs were used. These DFs are sometimes lower (and more conservative) than the DFs expected to ensure that the profile obtained is bounding. The DFs per facility are described in the sections below.

8.6.1 Pretreatment Vessel Vents and Offgas Treatment Systems

The unabated quantities of organic, inorganic, and radionuclide constituents in the pretreatment facility offgas streams are estimated as described in Section 7.1. Entrainment factors are used in determining the inorganic and radionuclide quantities in the vessel vent and RFD/PJM exhausts. Henry's Law constants are used in determining the quantity of organic compounds from the vessel vents and evaporators. Inorganics and radionuclide emissions from the evaporator overheads are determined from equipment DFs.

The emission control equipment DFs for the pretreatment vessel vent (PVP) and pulse-jet ventilation (PJV) systems are based primarily on vendor information. Table 10 presents the offgas treatment DFs and basis for the inorganic and radionuclide constituents. Table 11 provides the organic DFs for the pretreatment offgas treatment equipment. The methodology used to estimate the DFs for each organic constituent in the PVP system is presented in Appendix G. Though preliminary, it provides a bounding basis for organic constituents releases through the PVP process flue.

8.6.2 LAW and HLW Melter Offgas Treatment Systems

The principal components of the melter offgas stream are air and water vapor. Secondary components of the melter offgas stream are acid gases and aerosols. Water present in the melter feed is vaporized to

steam. Acid gases are generated from the decomposition of salts and organic compounds present in the feed. Aerosols are present due to cold-cap solids being entrained in the offgas stream. The HLW melter offgas is expected to contain less acid gases than LAW melter offgas. However, the HLW melter offgas will contain higher concentrations of radionuclides than the LAW melter offgas.

All the DFs used for this emissions analysis are based on actual R&T testing results, vendor information, and engineering calculations. The DFs used for emissions analysis in the vitrification plants are presented in Table 12 for inorganic, and radionuclide constituents. This table also specifies the basis (i.e. reference) for each DF used. Table 11 shows the removal efficiencies expected for the organic constituents within the vitrification plants. All the DFs presented in these tables are based on memoranda CCN# 044663 and CCN# 053500.

9 Summary of Emissions Analysis Results

The SSFM output identifies the emission rates for the 117 analyzed organic, inorganic, radionuclide COPCs, and criteria pollutants. This output is provided in Appendix A. As discussed in Section 5, representative compounds are used to estimate emission rates for compounds not analyzed within the SSFM. Tables 13 through 15 present the estimated emissions for each of the organic, inorganic, and radionuclide COPCs, respectively. The emission rates at the stack are referred to as abated emissions. In addition to stack emission rates, the SSFM produces output for unabated (or uncontrolled) emission points that correspond to the stack emission rates. The SSFM streams that are summarized in Tables 13 through 15 include:

Feed Streams

- Feed from Tank Farms to HLW Feed Receipt (FRP14)
- Feed from Tank Farms to LAW Feed Receipt (FRP01)

Abated emissions:

- The abated pretreatment vessel vent (stream PVP12)
- The abated pretreatment RFD/PJM vent (stream PJV11)
- The LAW process offgas and vessel vent (stream LVP26)
- The HLW process offgas and vessel vent (stream HOP33)
- The HLW RFD/PJM vent (stream PJV34)

Unabated emissions:

- The unabated pretreatment vessel vent (stream before PVP01)
- The unabated pretreatment RFD/PJM (stream PJV04)
- The unabated LAW melter offgas (stream LMP06)
- The unabated HLW melter offgas (stream HMP06)
- The unabated HLW RFD/PJM (stream PJV32)

All of the values in Tables 13 and 14 are listed in grams per second. Table 15 values are presented in curies per day. The PIC emission rate estimates are presented in Table 16. Rates are shown in units of grams per second and are provided for the pretreatment, HLW, and LAW process flues.

As expected, the pretreatment processes contribute the highest abated organic emission rates, and vitrification processes contribute the highest abated inorganic and radionuclide emission rates. The vitrification processes are the main contributors for Hg, NO_2 and SO_2 emissions. They are also the main contributors for ^{129}I, ^{3}H, ^{14}C, and ^{137}Cs.

Emission estimates have been prepared, as detailed in Tables 13, 14, 15, and 16, in accordance with current comprehension of waste feed materials, normal process operations and treatment efficiencies. The emissions estimate has retained conservatism with respect to composition, treatment, and analysis to ensure safe operation and protection of human health and the environment.

10 References

Project Documents

RPT-W375PT-PR00021, *PT Vessel Vent System Baseline Operating Conditions and Radioactive Aerosol Loading of Exhaust Air Streams,* Rev 0

RPT-24590-EN00001, *Vessel Vents and PJM/RFD Emissions,* Rev 0

RPT-W375-EN00001, *Final Work Plan for Screening Level Risk Assessment for the WTP*, Rev 1

RPT-W375-ES-00001, *Integrated Emissions Baseline Report for the River Protection Project Waste Treatment Plant,* Rev 1

CALC-W375HV-PR00033, *HLW Vessel Ventilation Calculation,* Rev 1

CALC-W375LV-PR00022, *System 234 LAW Vessel Ventilation Calculation,* Rev 2

CALC-W375PT-PR00100, *PT Vessel Vents HEME Sizing - (System PT-540),* Rev 2

CCN#044663, *Updated Basis for the WTP's Emissions Profile*

CCN# 053500, *HLW and LAW Vitrification Decontamination Factors for Air Emissions Modeling*

CNN #057415, *Phase Determination for COPCs Potentially Emitted from the Hanford Tank Waste Treatment and Immobilization Plant (WTP)*

24590-WTP-RPT-PR-01-011, *Mercury Pathway and Treatment Assessment for the WTP*, Rev 0

24590-WTP-RPT-PT-02-002, *Integrated Emissions Baseline Report Update*, Rev 1

24590-WTP-RPT-PT-02-005, *Flowsheet Bases, Assumptions, and Requirements*, Rev 1

24590-WTP-RPT-ENV-01-004, *Best Available Radionuclide Control Technology Analysis for the WTP,* Rev 1

24590-WTP-MDD-PR-01-003, *Steady State Flowsheet (ACM) Model Design Document,* Rev 4

24590-HLW-MKC-HOP-00001, *Melter Decontamination Estimation*, Rev 0

24590-PTF-M0C-PVP-00001, *Duty of Pretreatment Thermal Oxidizer (PVP-OXID-00001),* Rev B

24590-WTP-M4C-FRP-00001, *Updated Emissions Run Feed Vector*, Rev 0A

24590-WTP-M4C-HOP-00001, *Mercury Abatement System Equipment Calculation*, Rev A

24590-WTP-M4C-FRP-00002, *Integrated Emissions Report PIC Estimation*, Rev 0A

24590-HLW-MKC-HOP-00002, *Sizing of the HLW Silver Mordenite Columns,* Rev B

24590-LAW-MKC-LVP-00002, *Sizing of the LAW Caustic Scrubber Column*, Rev A

24590-WTP-M4C-FRP-00003, *Integrated Emissions Baseline Report Non-SSFM Represented Constituents Emissions Rate Estimation*, Rev A

24590-WTP-M4C-FRP-00005, *Estimation of Non-SSFM Represented Organic Emission Rates Required to Support the Integrated Emissions Baseline Report*, Rev A

24590-PTF-MVC-PVP-00012, *Sizing of PT Vessel Vent Caustic Scrubber PVP-SCB-00002,* Rev A

24590-WTP-MKC-50-00004, *Vitrification Offgas Treatment Equipment Effective Particulate Decontamination Factors*, Rev 0

Codes and Standards

40 CFR Part 50. *The National Primary and Secondary Ambient Air Quality Standards*, January 20, 1983. US Environmental Protection Agency.

LRAPA. Lane Regional Air Pollution Authority (LRAPA), *Rules and Regulations: Title 35, Major Source Interim Emission Fee Rules*, Section 35-065, http://www.lrapa.org/rules/title35.htm

Other Documents

Best Basis Inventory, TWINS database,
http//twins.pnl.gov:8001/twins.htmhttp://twins.pnl.gov:8001/twins.htm

Campbell and others. 1995. *Flammable Gas Safety Program. Organic Analysis and Analytical Methods Development: FY 1995 Progress Report*, PNL-10776. Pacific Northwest Laboratory, Richland, Washington, USA.

DOE and others. 2000. *Framework Agreement for Management of Polychlorinated Biphenyls (PCBs) in Hanford Tank Waste*, signed by H. Boston (DOE-ORP), T. Fitzsimmons (Ecology), C. Findley (EPA), K. Klein (DOE-RL), August 31, 2000.

EPA 1999. *Screening Level Ecological Risk Assessment Protocol for Hazardous Waste Combustion Facilities*, EPA 530-D-99-001A, Peer Review Draft, US Environmental Protection Agency Office of Solid Waste and Emergency Response, August 1999.

EPA 1999a. *Errata - Human Health Risk Assessment Protocol for Hazardous Waste Combustion Facilities (Peer Review Draft)*, US Environmental Protection Agency, August 2, 1999.

EPA. 1998. *Human Health Risk Assessment Protocol for Hazardous Waste Combustion Facilities*, EPA530-D-98-001A, Peer Review Draft, US Environmental Protection Agency Office of Solid Waste and Emergency Response, July 1998.

Howard PH and Meylan WM. 1997. *Handbook of Physical Properties of Organic Chemicals.* Lewis Publishers.

Klinger and others. 1999. *Organic Analysis of AW-101 and AN-107 Tank Waste*, BNFL-RPT-001 Revision 0. Battelle Pacific Northwest Laboratories, Richland, Washington, USA.

Kupfer, MJ. 1997. *Standard Inventories of Chemicals and Radionuclides in Hanford Site Tank Wastes*, Appendix I. HNF-SD-WM-TI-740, Revision 0.

Pegg, I, and others, *Final Report Integrated Off-Gas System Tests on the DM-1200 Melter with RPP-WTP LAW Sub-Envelope A1 Simulants*, VSL-02R8800-2, Vitreous State Laboratory, September 3, 2002, Washington, DC

Pegg, I, and others, *Final Report Integrated Off-Gas System Tests on the DM-1200 Melter with RPP-WTP LAW Sub-Envelope C1 Simulants*, VSL-02R8800-1, Vitreous State Laboratory, July 25, 2002, Washington, DC

Pegg, I, and others, *Final Report Off-Line Tests of the DM-1200 Thermal Catalytic Oxidation (TCO) Unit*, VSL-02R8200-1, Vitreous State Laboratory, August 30, 2002, Washington, DC

Pegg, I, and others, *Final Report Test on the DuraMelter 1200 HLW Pilot Melter System Using AZ-101 HLW Simulants*, VSL-02R0100-2, Vitreous State Laboratory, June 11, 2002, Washington, DC

VSL. 1999. *Determination of the Fate of Hazardous Organics During Vitrification of WTP LAW and HLW Simulants,* TRPT-W375-99-00002, Revision 0. Vitreous State Laboratory.

Wiemers KD, Miller M, Lerchen ME, Meier K. 1998. *Regulatory Data Quality Objectives Supporting Tank Waste Remediation System Privatization Project*, PNNL-12040 Rev. 0.

Table 1 List of Process Flow Diagrams

Facility	System	Process Flow Diagram Name	Drawing #	Rev #
Pretreatment	FRP	Waste Feed Receipt	24590-PTF-M5-V17T-00003	1
	FEP	Waste Feed Evaporation (Sheet 1 of 2)	24590-PTF-M5-V17T-00004001	0
	FEP	Waste Feed Evaporation (Sheet 2 of 2)	24590-PTF-M5-V17T-00004002	0
	TLP	Treated LAW Evaporation	24590-PTF-M5-V17T-00005	0
	TCP	Treated LAW Concentrate Storage	24590-PTF-M5-V17T-00006	1
	HLP	HLW Feed Receipt	24590-PTF-M5-V17T-00007	1
	HLP	HLW Lag Storage and Feed Blending	24590-PTF-M5-V17T-00008	1
	UFP	Ultrafiltration Feed Preparation	24590-PTF-M5-V17T-00009	1
	UFP	Ultrafiltration	24590-PTF-M5-V17T-00010	1
	UFP	Ultrafiltration Permeate Collection	24590-PTF-M5-V17T-00011	1
	CXP	Cesium Ion Exchange Process Vessels	24590-PTF-M5-V17T-00012	0
	CXP	Cesium Ion Exchange Process Columns	24590-PTF-M5-V17T-00013	0
	CNP	Cesium Nitric Acid Recovery Process	24590-PTF-M5-V17T-00014	0
	TXP	Technetium Ion Exchange Process Vessels	24590-PTF-M5-V17T-00015	0
	TXP	Technetium Ion Exchange Process Columns	24590-PTF-M5-V17T-00016	0
	TEP	Technetium Eluant Recovery Process	24590-PTF-M5-V17T-00017	0
	CRP	Cesium Resin Addition Process	24590-PTF-M5-V17T-00018	0
	TRP	Technetium Resin Addition Process	24590-PTF-M5-V17T-00019	0
	RDP	Spent Resin Collection And Dewatering Process	24590-PTF-M5-V17T-00020	0
	PVP/PVV/PJV	Pretreatment Vessel Vents Process (PVP/PVV)	24590-PTF-M5-V17T-00021001	0
	PVP/PVV/PJV	Pretreatment RFD/PJM Exhaust (PJV)	24590-PTF-M5-V17T-00021002	0
	PVP/PVV/PJV	Pretreatment Vessel Passive Purge Air Inlets (PVP)	24590-PTF-M5-V17T-00021003	0
	PVP/PVV/PJV	Pretreatment Vessels Vent Exhaust Header (PVP)	24590-PTF-M5-V17T-00021004	0
	PWD	Pretreatment Effluent, Plant Wash and Drain	24590-PTF-M5-V17T-00022001	0
	PWD	Pretreatment Plant Wash and Drain	24590-PTF-M5-V17T-00022002	0
	PWD/RLD	Pretreatment Radioactive Liquid Disposal (RLD)	24590-PTF-M5-V17T-00022003	0
	PWD/RLD	Pretreatment Radioactive Liquid Disposal/Recycle (RLD)	24590-PTF-M5-V17T-00022004	0
	NAR	Pretreatment Process Reagents	24590-PTF-M5-V17T-00023001	0
	SHR/SNR	Pretreatment Process Reagents	24590-PTF-M5-V17T-00023002	0
	DIW	Pretreatment Process Reagents	24590-PTF-M5-V17T-00023003	0
	AFR/STR/SPR	Pretreatment Process Reagents	24590-PTF-M5-V17T-00023004	0
LAW Vitrification	LCP/GFR/LFP	LAW Vitrification Feed Preparation	24590-LAW-M5-V17T-00001	3
	LCP/GFR/LFP	LAW Vitrification Feed Preparation	24590-LAW-M5-V17T-00002	3
	LMP	LAW Vitrification Melter 1	24590-LAW-M5-V17T-00004	3
	LMP	LAW Vitrification Melter 2	24590-LAW-M5-V17T-00005	3
	LOP	Melter 1 Primary Offgas Treatment	24590-LAW-M5-V17T-00007	3
	LOP	Melter 2 Primary Offgas Treatment	24590-LAW-M5-V17T-00008	3
	LVP/URR	LAW Vit Secondary Offgas & Urea	24590-LAW-M5-V17T-00010	3
	LVP	LAW Vit Secondary Offgas Treatment	24590-LAW-M5-V17T-00011	3
	GFR	Inert Fill Supply	24590-LAW-M5-V17T-00012	2
	CDG	LAW Vitrification Container Decontamination	24590-LAW-M5-V17T-00013	3
	RLD/NLD	LAW Liquid Effluent	24590-LAW-M5-V17T-00014	3
	SHR/MXR	LAW Cold Chemical Supply	24590-LAW-M5-V17T-00016	3
HLW Vitrification	HCP/GFR/HFP	HLW Receipt & Feed Preparation	24590-HLW-M5-V17T-00001	3
	HMP	HLW Vitrification Melter	24590-HLW-M5-V17T-00002	3
	HOP	HLW Vit Primary Offgas Treatment	24590-HLW-M5-V17T-00003	3
	HOP	HLW Vitrification Secondary Offgas Treatment	24590-HLW-M5-V17T-00004	3
	PJV	HLW Vitrification Pulse Ventilation Treatment	24590-HLW-M5-V17T-00005	2
	HDH	HLW Vitrification HLW Canister Decon	24590-HLW-M5-V17T-00006	3
	RLD	HLW Vitrification Liquid Waste Effluent (Sheet 1)	24590-HLW-M5-V17T-00007001	3
	RLD	HLW Vitrification Liquid Waste Effluent (Sheet 2)	24590-HLW-M5-V17T-00007002	3
	NAR/SHR/AMR/DIW	HLW Vitrification Reagents	24590-HLW-M5-V17T-00008	3
	NLD	HLW C1/C2 Drains	24590-HLW-M5-V17T-00009	3

Table 2 List of Organic COPCs and PICs

#	CAS Registry Number	Compound	Source	SSFM Indicator?	Henry's Law Constant (bar*m³/kgmol)	Henry's Law-Based Grouping	Offgas Phase Type
1	100-00-5	p-Nitrochlorobenzene	feed	-	4.83E-03	10	vapor
2	100-21-0	p-Phthalic acid	feed	yes	3.83E-10	1	vapor
3	100-25-4	1,4-Dinitrobenzene	feed	-	8.28E-05	6	particle-bound
4	100-41-4	Ethyl benzene	feed	-	7.78E+00	20	vapor
5	100-42-5	Styrene	feed	-	2.71E+00	19	vapor
6	10061-01-5	cis-1,3-Dichloropropene	feed	yes	2.67E+00	19	vapor
7	10061-02-6	trans-1,3-Dichloropropene	feed	-	8.60E-01	17	vapor
8	101-55-3	4-Bromophenylphenyl ether	feed	-	1.15E-01	14	vapor
9	101-84-8	Diphenyl ether	feed	-	2.75E-01	16	vapor
10	106-35-4	3-Heptanone	feed	-	8.96E-02	14	vapor
11	106-42-3	p-Xylene (Dimethyl benzene)	feed	-	6.81E+00	19	vapor
12	106-46-7	1,4-Dichlorobenzene	feed	-	2.38E+00	18	vapor
13	106-88-7	1,2-Epoxybutane	feed	-	1.78E-01	15	vapor
14	106-93-4	Ethylene dibromide (Dibromethane)	feed	yes	6.58E-01	16	vapor
15	106-97-8	Butane	feed	yes	9.37E+02	26	vapor
16	106-99-0	1,3-Butadiene	feed	yes	7.26E+01	23	vapor
17	107-02-8	Acrolein	feed	-	1.20E-01	14	vapor
18	107-05-1	3-Chloropropene (Allyl chloride)	feed	-	1.09E+01	20	vapor
19	107-06-2	1,2-Dichloroethane (Ethylene chloride)	feed	-	1.16E+00	17	vapor
20	107-12-0	Propionitrile	feed	-	3.65E-02	13	vapor
21	107-13-1	Acrylonitrile	feed	-	1.36E-01	14	vapor
22	107-18-6	2-Propene-1-ol	feed	-	4.92E-03	10	vapor
23	107-31-3	Formic acid, methyl ester	feed	-	2.20E-01	15	vapor
24	107-66-4	Dibutylphosphate	feed	-	4.20E-06	5	particle-bound
25	107-87-9	2-Pentanone	feed	-	8.25E-02	14	vapor
26	108-03-2	1-Nitropropane	feed	-	8.59E-02	14	vapor
27	108-05-4	Vinyl acetate	feed	-	5.04E-01	16	vapor
28	108-10-1	Hexone (4-Methyl-2-pentanone or MIBK)	feed	-	1.36E-01	14	vapor
29	108-20-3	Bis(isopropyl)ether	feed	-	2.25E+00	18	vapor
30	108-38-3	m-Xylene (Dimethyl benzene)	feed	-	7.09E+00	19	vapor
31	108-39-4	m-Cresol	feed	-	8.45E-04	9	vapor
32	108-87-2	Methylcyclohexane	feed	yes	4.24E+02	25	vapor
33	108-88-3	Toluene	feed	yes	6.55E+00	19	vapor
34	108-90-7	Chlorobenzene	feed	-	3.07E+00	19	vapor
35	108-93-0	Cyclohexanol	feed	-	4.34E-03	10	vapor
36	108-94-1	Cyclohexanone	feed	-	8.88E-03	11	vapor
37	108-95-2	Phenol	feed	yes	3.29E-04	8	vapor
38	109-66-0	n-Pentane	feed	-	1.23E+03	26	vapor
39	109-99-9	Tetrahydrofuran	feed	-	6.96E-02	13	vapor
40	110-12-3	5-Methyl-2-hexanone	feed	-	1.58E-01	15	vapor

Table 2 List of Organic COPCs and PICs

#	CAS Registry Number	Compound	Source	SSFM Indicator?	Henry's Law Constant (bar*m^3/kgmol)	Henry's Law-Based Grouping	Offgas Phase Type
41	110-43-0	2-Heptanone	feed	-	1.67E-01	15	vapor
42	110-54-3	n-Hexane	feed	yes	1.78E+03	27	vapor
43	110-62-3	n-Valeraldehyde	feed	-	1.45E-01	15	vapor
44	110-82-7	Cyclohexane	feed	yes	1.48E+02	24	vapor
45	110-83-8	Cyclohexene	feed	-	4.49E+01	22	vapor
46	110-86-1	Pyridine	feed	-	1.09E-02	11	vapor
47	111-65-9	n-Octane	feed	-	3.17E+03	28	vapor
48	111-76-2	Ethylene glycol monobutyl ether	feed	-	1.58E-03	9	vapor
49	111-84-2	n-Nonane	feed	yes	3.36E+03	28	vapor
50	117-81-7	Bis(2-ethylhexyl)phthalate (DEHP)	feed	-	2.66E-04	30	particle-bound
51	117-84-0	n-Dioctyl phthalate	feed	-	2.54E-03	32	particle-bound
52	118-74-1	Hexachlorobenzene	feed	yes	1.68E+00	18	vapor
53	120-12-7	Anthracene	feed	yes	5.49E-02	13	vapor
54	120-82-1	1,2,4-Trichlorobenzene	feed	yes	1.40E+00	17	vapor
55	120-83-2	2,4-Dichlorophenol	feed	-	5.44E-03	10	vapor
56	121-44-8	Triethylamine	feed	-	1.47E-01	15	vapor
57	121-69-7	Dimethylaniline	feed	-	5.61E-02	13	vapor
58	122-39-4	N,N-Diphenylamine	feed	yes	3.35E-03	10	vapor
59	123-19-3	4-Heptanone	feed	-	5.42E-02	13	vapor
60	123-38-6	n-Propionaldehyde	feed	-	7.24E-02	14	vapor
61	123-51-3	3-Methyl-1-butanol	feed	-	1.39E-02	12	vapor
62	123-86-4	Acetic acid n-butyl ester	feed	-	2.77E-01	16	vapor
63	123-91-1	1,4-Dioxane	feed	-	4.74E-03	10	vapor
64	126-73-8	Tributyl phosphate	feed	yes	1.48E-04	7	vapor
65	126-98-7	2-Methyl-2-propenenitrile (Methacrylonitrile)	feed	-	2.44E-01	16	vapor
66	127-18-4	Perchloroethylene (tetrachloroethylene)	feed	yes	1.75E+01	21	vapor
67	127-19-5	N,N-Dimethylacetamide	feed	-	1.29E-05	5	vapor
68	128-37-0	2,6-Bis(tert-butyl)-4-methylphenol	feed	-	4.07E-03	32	vapor
69	129-00-0	Pyrene	feed	yes	1.17E-02	33	particle-bound
70	1321-64-8	Pentachloronaphthalene	feed	-	1.16E-01	14	particle-bound
71	1321-65-9	Trichloronaphthalene	feed	-	2.11E-01	15	vapor
72	132-64-9	Dibenzofuran	feed	yes	2.10E-01	15	vapor
73	1335-87-1	Hexachloronaphthalene	feed	-	8.59E-02	14	particle-bound
74	1335-88-2	Tetrachloronaphthalene	feed	-	1.57E-01	15	particle-bound
75	1336-36-3	Polychlorinated biphenyls (PCBs)	feed	yes	4.10E-01	35	particle-bound
76	141-78-6	Acetic acid ethyl ester (Ethyl acetate)	feed	-	1.32E-01	14	vapor
77	141-79-7	4-Methyl-3-penten-2-one	feed	-	3.62E-02	13	vapor
78	142-82-5	n-Heptane	feed	-	1.97E+03	27	vapor
79	144-62-7	Oxalic acid	feed	yes	1.41E-07	3	vapor
80	156-60-5	trans-1,2-Dichloroethylene	feed	-	9.26E+00	20	vapor

Table 2 List of Organic COPCs and PICs

#	CAS Registry Number	Compound	Source	SSFM Indicator?	Henry's Law Constant (bar*m^3/kgmol)	Henry's Law-Based Grouping	Offgas Phase Type
81	1582-09-8	Trifluralin	feed	-	1.02E-01	14	particle-bound
82	1634-04-4	Methyl tert-butyl ether	feed	-	5.79E-01	16	vapor
83	1836-75-5	Nitrofen	feed	-	2.52E-04	30	particle-bound
84	189-55-9	Dibenzo[a,i]pyrene	feed	-	1.39E-05	5	particle
85	189-64-0	Dibenzo[a,h]pyrene	feed	-	1.39E-05	5	particle
86	191-24-2	Benzo(g,h,i)perylene	feed	-	3.27E-04	30	particle-bound
87	191-30-0	Benzo[a,i]pyrene	feed	-	1.39E-05	5	particle
88	192-65-4	Dibenzo[a,e]pyrene	feed	-	1.39E-05	5	particle
89	193-39-5	Indeno(1,2,3-cd)pyrene	feed	-	3.43E-04	30	particle
90	205-82-3	Benzo(j)fluoranthene	feed	-	2.00E-04	7	particle-bound
91	205-99-2	Benzo(b)fluoranthene	feed	-	6.48E-04	30	particle-bound
92	206-44-0	Fluoranthene	feed	-	8.74E-03	33	particle-bound
93	207-08-9	Benzo(k)fluoranthene	feed	-	5.76E-04	30	particle-bound
94	208-96-8	Acenaphthylene	feed	yes	1.13E-01	14	vapor
95	218-01-9	Chrysene	feed	yes	5.16E-03	32	particle-bound
96	2234-13-1	Octachloronaphthalene	feed	-	1.01E-01	14	particle-bound
97	224-42-0	Dibenz[a,j]acridine	feed	-	1.88E-06	4	particle-bound
98	226-36-8	Dibenz[a,h]acridine	feed	-	1.88E-06	4	particle-bound
99	2385-85-5	Mirex	feed	-	8.00E-01	17	vapor
100	25551-13-7	Trimethyl benzene	feed	-	7.15E+00	19	vapor
101	26140-60-3	Terphenyls	feed	-	3.14E-02	34	particle-bound
102	27154-33-2	Trichlorofluoroethane	feed	-	1.23E+02	23	vapor
103	287-92-3	Cyclopentane	feed	-	1.86E+02	24	vapor
104	309-00-2	Aldrin	feed	yes	4.34E-02	34	particle-bound
105	31508-00-6	2,3',4,4',5-Pentachlorobiphenyl (PBC 118)	feed	-	2.84E-01	35	particle-bound
106	319-84-6	Hexachlorocyclohexane (Lindane) Alpha BHC	feed	-	1.20E-02	33	vapor
107	319-85-7	Hexachlorocyclohexane (Lindane) Beta BHC	feed	yes	4.34E-04	30	particle-bound
108	319-86-8	Delta-BHC	feed	-	4.23E-04	30	particle-bound
109	32598-13-3	3,3',4,4'-Tetrachlorobiphenyl (TCB)	feed	-	9.28E-03	33	particle-bound
110	32598-14-4	2,3,3',4,4'-Pentachlorobiphenyl (PCB 105)	feed	-	8.14E-01	17	particle-bound
111	32774-16-6	3,3',4,4',5,5'-Hexachlorobiphenyl	feed	-	6.76E-02	34	particle-bound
112	35065-29-3	2,2',3,4,4',5,5'-Heptachlorobiphenyl	feed	-	9.87E-03	33	particle-bound
113	35065-30-6	2,2',3,3',4,4',5-Heptachlorobiphenyl	feed	-	8.88E-03	33	particle-bound
114	3697-24-3	5-Methylchrysene	feed	-	5.46E-03	32	particle-bound
115	3825-26-1	Ammonium perfluorooctanoate	feed	-	9.87E-02	14	particle-bound
116	38380-08-4	2,3,3',4,4',5-Hexachlorobiphenyl (PCB 157)	feed	yes	9.55E-03	14	particle-bound
117	39635-31-9	2,3,3',4,4',5,5'-Heptachlorobiphenyl	feed	-	3.82E-01	33	particle-bound
118	4170-30-3	2-Butenaldehyde (2-Butenal)	feed	yes	9.55E-03	11	vapor
119	465-73-6	Isodrin	feed	-	3.82E-01	35	vapor
120	50-00-0	Formaldehyde	feed	-	3.33E-04	8	vapor

Table 2 List of Organic COPCs and PICs

#	CAS Registry Number	Compound	Source	SSFM Indicator?	Henry's Law Constant (bar*m³/kgmol)	Henry's Law-Based Grouping	Offgas Phase Type
121	50-29-3	4,4-DDT	feed	-	8.21E-03	33	particle-bound
122	50-32-8	Benzo(a)pyrene	feed	yes	4.51E-04	30	particle-bound
123	52663-72-6	2,3',4,4',5,5'-Hexachlorobiphenyl	feed	-	6.76E-02	34	particle-bound
124	53-70-3	Dibenzo(a,h)anthracene	feed	-	1.21E-04	7	particle
125	540-59-0	1,2-Dichloroethylene	feed	-	4.03E+00	19	vapor
126	540-84-1	2,2,4-Trimethylpentane	feed	-	3.00E+03	28	vapor
127	541-73-1	1,3-Dichlorobenzene	feed	-	2.60E+00	19	vapor
128	56-23-5	Carbon tetrachloride	feed	yes	2.72E+01	22	vapor
129	563-80-4	3-Methyl-2-butanone	feed	-	9.60E-02	14	vapor
130	56-49-5	3-Methylcholanthrene	feed	-	2.97E+03	28	particle-bound
131	56-55-3	Benzo(a)anthracene	feed	-	1.18E-02	33	particle-bound
132	57-14-7	1,1-Dimethylhydrazine	feed	yes	1.23E-02	12	vapor
133	57465-28-8	3,3',4,4',5-Pentachlorobiphenyl	feed	-	2.84E-01	15	particle-bound
134	58-89-9	gamma-BHC (Lindane)	feed	yes	5.07E-03	32	particle-bound
135	58-90-2	2,3,4,6-Tetrachlorophenol	feed	yes	8.72E-03	11	vapor
136	591-78-6	2-Hexanone	feed	-	9.20E-02	14	vapor
137	59-50-7	4-Chloro-3-methylphenol	feed	-	2.42E-03	32	particle-bound
138	59-89-2	N-Nitrosomorpholine	feed	-	2.42E-05	6	vapor
139	602-87-9	5-Nitroacenaphthene	feed	-	1.10E-03	9	particle-bound
140	60-29-7	Ethyl ether	feed	-	1.21E+00	17	vapor
141	603-34-9	Triphenylamine	feed	yes	5.34E-03	32	vapor
142	60-34-4	Methylhydrazine	feed	-	2.99E-03	10	vapor
143	60-35-5	Acetamide	feed	yes	1.11E-05	5	vapor
144	60-57-1	Dieldrin	feed	yes	9.87E-03	33	particle-bound
145	621-64-7	Di-n-Propylnitrosamine	feed	-	5.31E-03	10	vapor
146	624-83-9	Methyl isocyanate	feed	-	9.14E-01	17	vapor
147	627-13-4	Nitric acid, propyl ester	feed	-	1.25E+00	17	vapor
148	62-75-9	N-Nitroso-N,N-dimethylamine	feed	yes	1.80E-03	9	vapor
149	630-20-6	1,1,1,2-Tetrachloroethane	feed	-	2.39E+00	18	vapor
150	64-17-5	Ethyl alcohol	feed	-	4.93E-03	10	vapor
151	64-18-6	Formic acid	feed	-	1.65E-04	7	vapor
152	64-19-7	Acetic acid	feed	-	9.87E-05	6	vapor
153	65510-44-3	2',3,4,4',5-Pentachlorobiphenyl	feed	-	2.84E-01	15	particle-bound
154	67-56-1	Methyl alcohol (Methanol)	feed	-	4.49E-03	10	vapor
155	67-63-0	2-Propyl alcohol (Isopropanol)	feed	-	7.99E-03	11	vapor
156	67-64-1	2-Propanone (Acetone)	feed	-	3.92E-02	13	vapor
157	67-66-3	Chloroform	feed	-	3.62E+00	19	vapor
158	67-72-1	Hexachloroethane	feed	-	3.84E+00	19	vapor
159	684-16-2	Hexafluoroacetone	feed	-	3.03E+00	19	vapor
160	69782-90-7	2,3,3',4,4',5'-Hexachlorobiphenyl	feed	-	6.76E-02	34	particle-bound

Table 2 List of Organic COPCs and PICs

#	CAS Registry Number	Compound	Source	SSFM Indicator?	Henry's Law Constant (bar*m^3/kgmol)	Henry's Law-Based Grouping	Offgas Phase Type
161	70362-50-4	3,4,4',5-Tetrachlorobiphenyl	feed	-	9.28E-03	33	particle-bound
162	71-23-8	n-Propyl alcohol	feed	-	7.31E-03	11	vapor
163	71-36-3	n-Butyl alcohol	feed	-	8.69E-03	11	vapor
164	71-43-2	Benzene	feed	yes	5.48E+00	19	vapor
165	71-55-6	Methyl chloroform (1,1,1-Trichloroethane)	feed	-	1.70E+01	21	vapor
166	72-20-8	Endrin	feed	-	6.28E-03	32	particle-bound
167	72-43-5	Methoxychlor	feed	-	2.00E-04	7	particle-bound
168	72-54-8	4,4-DDD	feed	-	6.51E-03	32	particle-bound
169	72-55-9	4,4-DDE	feed	-	4.11E-02	34	particle-bound
170	74472-37-0	2,3,4,4',5-Pentachlorobiphenyl	feed	-	2.84E-01	15	particle-bound
171	74-83-9	Bromomethane (Methyl bromide)	feed	-	6.16E+00	19	vapor
172	74-87-3	Chloromethane (Methyl chloride)	feed	-	8.70E+00	20	vapor
173	74-97-5	Bromochloromethane	feed	-	1.44E+00	17	vapor
174	74-99-7	Methylacetylene	feed	-	1.09E+01	20	vapor
175	75-00-3	Chloroethane	feed	-	1.10E+01	20	vapor
176	75-01-4	Vinyl chloride (1-Chloroethene)	feed	-	2.74E+01	22	vapor
177	75-05-8	Acetonitrile	feed	yes	3.40E-02	13	vapor
178	75-07-0	Acetaldehyde	feed	-	6.58E-02	13	vapor
179	75-09-2	Dichloromethane (Methylene chloride)	feed	-	3.21E+00	19	vapor
180	75-12-7	Formamide	feed	yes	1.37E-06	4	vapor
181	75-15-0	Carbon disulfide	feed	-	1.42E+01	20	vapor
182	75-21-8	Ethylene oxide (Oxirane)	feed	-	1.46E-01	15	vapor
183	75-27-4	Bromodichloromethane	feed	-	2.09E+00	18	vapor
184	75-34-3	1,1-Dichloroethane	feed	-	5.55E+00	19	vapor
185	75-35-4	1,1-Dichloroethene (Vinylidene chloride)	feed	-	2.58E+01	22	vapor
186	75-43-4	Dichlorofluoromethane	feed	-	1.07E+01	20	vapor
187	75-45-6	Chlorodifluoromethane	feed	-	4.01E+01	22	vapor
188	75-50-3	Trimethylamine	feed	-	1.03E-01	14	vapor
189	75-52-5	Nitromethane	feed	-	2.82E-02	13	vapor
190	75-55-8	2-Methylaziridine	feed	-	8.31E-03	11	vapor
191	75-61-6	Difluorodibromomethane	feed	-	3.04E+01	22	vapor
192	75-63-8	Trifluorobromomethane	feed	-	4.92E+02	25	vapor
193	75-65-0	2-Methyl-2-propanol	feed	-	8.93E-03	11	vapor
194	75-69-4	Trichlorofluoromethane	feed	yes	9.57E+01	23	vapor
195	75-71-8	Dichlorodifluoromethane	feed	-	3.39E+02	25	vapor
196	75-99-0	2,2-Dichloropropionic acid	feed	-	6.35E-05	6	vapor
197	76-03-9	Trichloroacetic acid	feed	-	1.33E-05	5	vapor
198	76-11-9	1,1,1,2-Tetrachloro-2,2-difluoroethane	feed	-	1.45E+02	24	vapor
199	76-12-0	1,1,2,2-Tetrachloro-1,2-difluoroethane	feed	-	1.12E+02	23	vapor
200	76-13-1	1,2,2-Trichloro-1,1,2-trifluoroethane (Freon 113)	feed	-	5.19E+02	25	vapor

Table 2 List of Organic COPCs and PICs

#	CAS Registry Number	Compound	Source	SSFM Indicator?	Henry's Law Constant (bar*m³/kgmol)	Henry's Law-Based Grouping	Offgas Phase Type
201	76-14-2	1,2-Dichloro-1,1,2,2-tetrafluoroethane	feed	-	2.76E+03	28	vapor
202	76-15-3	Chloropentafluoroethane	feed	yes	5.51E+03	29	vapor
203	76-44-8	Heptachlor	feed	yes	2.90E-01	16	vapor
204	78-83-1	2-Methylpropyl alcohol (Isobutyl alcohol)	feed	-	9.65E-03	11	vapor
205	78-87-5	1,2-Dichloropropane	feed	-	2.78E+00	19	vapor
206	78-92-2	1-Methylpropyl alcohol (2-Butanol)	feed	-	8.94E-03	11	vapor
207	78-93-3	Methyl ethyl ketone (MEK, 2-Butanone)	feed	-	5.62E-02	13	vapor
208	79-00-5	1,1,2-Trichloroethane	feed	-	8.13E-01	17	vapor
209	79-01-6	Trichloroethylene	feed	yes	9.72E+00	20	vapor
210	79-09-4	Propionic acid	feed	-	4.39E-04	8	vapor
211	79-10-7	2-Propenoic acid	feed	-	3.65E-04	8	vapor
212	79-20-9	Methyl acetate	feed	-	1.13E-01	14	vapor
213	79-34-5	1,1,2,2-Tetrachloroethane	feed	-	3.62E-01	16	vapor
214	8001-35-2	Toxaphene	feed	yes	5.92E-03	10	particle-bound
215	82-68-8	Pentachloronitrobenzene (PCBN)	feed	-	4.36E-02	13	vapor
216	83-32-9	Acenaphthene	feed	-	1.82E-01	15	vapor
217	84-66-2	Diethyl phthalate	feed	yes	6.02E-04	8	vapor
218	84-74-2	Dibutyl phthalate	feed	yes	1.79E-03	31	particle-bound
219	85-01-8	Phenanthrene	feed	-	4.17E-02	13	vapor
220	85-68-7	Butylbenzyl phthalate	feed	-	1.24E-03	31	particle-bound
221	86-73-7	Fluorene	feed	-	9.49E-02	14	particle-bound
222	87-68-3	Hexachlorobutadiene	feed	yes	1.02E+01	20	vapor
223	87-86-5	Pentachlorophenol	feed	yes	2.42E-05	6	vapor
224	88-06-2	2,4,6-Trichlorophenol	feed	-	2.57E-03	10	vapor
225	88-72-2	2-Nitrotoluene	feed	-	1.23E-02	12	vapor
226	88-75-5	2-Nitrophenol	feed	-	1.26E-02	12	vapor
227	88-85-7	2-sec-Butyl-4,6-dinitrophenol (Dinoseb)	feed	yes	4.50E-04	8	particle-bound
228	88-89-1	Picric acid	feed	yes	1.68E-08	2	particle-bound
229	91-20-3	Naphthalene	feed	yes	4.34E-01	16	vapor
230	91-22-5	Quinoline	feed	-	1.65E-03	9	vapor
231	91-58-7	2-Chloronapthalene	feed	-	3.16E-01	16	vapor
232	92-52-4	1,1'-Biphenyl	feed	-	3.04E-01	16	vapor
233	92-93-3	4-Nitrobiphenyl	feed	-	3.49E-03	10	particle-bound
234	93-72-1	Silvex (2,4,5-TP)	feed	-	8.94E-06	5	particle-bound
235	93-76-5	2,4,5-T	feed	-	8.57E-06	5	particle-bound
236	94-75-7	2,4-D and esters (160C typed)	feed	-	3.49E-05	6	vapor
237	95-13-6	Indene	feed	-	1.57E+00	18	vapor
238	95-47-6	o-Xylene	feed	-	5.11E+00	19	vapor
239	95-48-7	o-Cresol (2-Methylphenol)	feed	-	1.18E-03	9	vapor
240	95-49-8	2-Chlorotoluene	feed	-	3.52E+00	19	vapor

Table 2 List of Organic COPCs and PICs

#	CAS Registry Number	Compound	Source	SSFM Indicator?	Henry's Law Constant (bar*m³/kgmol)	Henry's Law-Based Grouping	Offgas Phase Type
241	95-50-1	o-Dichlorobenzene (1,2-Dichlorobenzene)	feed	-	1.89E+00	18	vapor
242	95-57-8	2-Chlorophenol	feed	-	1.11E-02	11	vapor
243	95-95-4	2,4,5-Trichlorophenol	feed	-	1.60E-03	9	vapor
244	96-22-0	3-Pentanone	feed	-	8.76E-02	14	vapor
245	96-69-5	Bis(3-tert-butyl-4-hydroxy-6-methyl-phenyl)sulfide	feed	-	2.83E+00	19	particle-bound
246	98-51-1	p-tert-Butyltoluene	feed	-	1.51E+01	21	vapor
247	98-82-8	Cumene	feed	-	1.13E+01	20	vapor
248	98-83-9	alpha-Methylstyrene	feed	-	2.52E+00	19	vapor
249	98-86-2	Acetophenone	feed	yes	1.03E-02	11	vapor
250	98-95-3	Nitrobenzene	feed	-	2.37E-02	12	vapor
1	100-02-7	4-Nitrophenol	pic	-	-	-	vapor
2	100-44-7	Benzyl chloride	pic	-	-	-	vapor
3	100-51-6	Benzyl alcohol	pic	-	-	-	vapor
4	100-52-7	Benzaldehyde	pic	-	-	-	vapor
5	101-77-9	4,4-Methylenedianiline	pic	-	-	-	vapor
6	103-33-3	Azobenzene	pic	-	-	-	vapor
7	103-65-1	n-Propyl benzene (Isocumene)	pic	-	-	-	vapor
8	104-51-8	n-Butylbenzene	pic	-	-	-	vapor
9	105-67-9	2,4-Dimethylphenol	pic	-	-	-	vapor
10	106-43-4	4-Chlorotoluene (p-Tolyl chloride)	pic	-	-	-	vapor
11	106-44-5	p-Cresol (4-Methyl phenol)	pic	-	-	-	vapor
12	106-47-8	p-Chloroaniline	pic	-	-	-	vapor
13	106-49-0	p-Toluidine	pic	-	-	-	vapor
14	106-51-4	Quinone	pic	-	-	-	vapor
15	106-89-8	Epichlorohydrin (1-chloro-2,3-epoxypropane)	pic	-	-	-	vapor
16	107-19-7	Propargyl alcohol	pic	-	-	-	vapor
17	107-21-1	Ethylene glycol	pic	-	-	-	vapor
18	107-98-2	Propylene gylcol monomethyl ether	pic	-	-	-	vapor
19	108-60-1	Dichloroisopropyl ether	pic	-	-	-	vapor
20	108-67-8	1,3,5-Trimethyl benzene	pic	-	-	-	vapor
21	108-86-1	Bromobenzene (Phenyl bromide)	pic	-	-	-	vapor
22	109-77-3	Malononitrile	pic	-	-	-	vapor
23	109-86-4	2-Methoxyethanol	pic	-	-	-	vapor
24	110-80-5	2-Ethoxyethanol	pic	-	-	-	vapor
25	111-15-9	Ethylene glycol monoethyl ether acetate	pic	-	-	-	vapor
26	111-44-4	Bis(2-chloroethyl) ether	pic	-	-	-	vapor
27	111-91-1	Bis(2-chloroethoxy)methane	pic	-	-	-	vapor
28	1120-71-4	1,3-Propane sultone	pic	-	-	-	vapor
29	119-90-4	3,3'-Dimethoxybenzidine (ortol-dianisidine)	pic	-	-	-	particle-bound
30	121-14-2	2,4-Dinitrotoluene	pic	-	-	-	particle-bound

Table 2 List of Organic COPCs and PICs

#	CAS Registry Number	Compound	Source	SSFM Indicator?	Henry's Law Constant (bar*m³/kgmol)	Henry's Law-Based Grouping	Offgas Phase Type
31	122-66-7	1,2-Diphenylhydrazine	pic	-	-	-	particle-bound
32	123-33-1	Maleic hydrazide	pic	-	-	-	particle-bound
33	124-48-1	Chlorodibromomethane	pic	-	-	-	vapor
34	131-11-3	Dimethylphthalate	pic	-	-	-	vapor
35	131-89-5	2-Cyclohexyl-4,6-dinitrophenol	pic	-	-	-	particle-bound
36	133-06-2	Captan	pic	-	-	-	particle-bound
37	135-98-8	sec-Butylbenzene	pic	-	-	-	vapor
38	145-73-3	Endothall	pic	-	-	-	particle
39	156-59-2	cis-1,2-Dichloroethene	pic	-	-	-	vapor
40	1746-01-6	2,3,7,8-Tetrachlorodibenzo(p)dioxin (TCDD)	pic	-	-	-	particle-bound
41	192-97-2	Benzo(e)pyrene	pic	-	-	-	particle-bound
42	19408-74-3	1,2,3,7,8,9-Hexachlorodibenzo(p)dioxin	pic	-	-	-	particle
43	23950-58-5	Pronamide	pic	-	-	-	vapor
44	25013-15-4	Methyl styrene (mixed isomers)	pic	-	-	-	vapor
45	3268-87-9	Octachlorodibenzo(p)dioxin	pic	-	-	-	particle
46	35822-46-9	1,2,3,4,6,7,8-Heptachlorodibenzo(p)dioxin	pic	-	-	-	particle
47	39001-02-0	Octachlorodibenzofuran	pic	-	-	-	particle
48	39227-28-6	1,2,3,4,7,8-Hexachlorodibenzo(p)dioxin	pic	-	-	-	particle-bound
49	40321-76-4	1,2,3,7,8-Pentachlorodibenzo(p)dioxin	pic	-	-	-	particle-bound
50	41851-50-7	Chlorocyclopentadiene	pic	-	-	-	vapor
51	460-19-5	Cyanogen	pic	-	-	-	vapor
52	506-68-3	Cyanogen bromide	pic	-	-	-	vapor
53	506-77-4	Cyanogen chloride	pic	-	-	-	vapor
54	510-15-6	Chlorobenzilate	pic	-	-	-	particle-bound
55	51207-31-9	2,3,7,8-Tetrachlorodibenzofuran	pic	-	-	-	particle-bound
56	51-28-5	2,4-Dinitrophenol	pic	-	-	-	particle-bound
57	51-79-6	Ethyl Carbamate (urethane)	pic	-	-	-	vapor
58	528-29-0	o-Dinitrobenzene	pic	-	-	-	particle-bound
59	532-27-4	2-Chloroacetophenone	pic	-	-	-	vapor
60	534-52-1	4,6-Dinitro-o-cresol	pic	-	-	-	particle-bound
61	5385-75-1	Dibenzo(a,e)fluoranthene	pic	-	-	-	particle
62	540-73-8	1,2-Dimethylhydrazine	pic	-	-	-	vapor
63	542-75-6	1,3-Dichloropropene	pic	-	-	-	vapor
64	542-88-1	Dichloromethyl ether	pic	-	-	-	vapor
65	55673-89-7	1,2,3,4,7,8,9-Heptachlorodibenzofuran	pic	-	-	-	particle
66	57117-31-4	2,3,4,7,8-Pentachlorodibenzofuran	pic	-	-	-	particle-bound
67	57117-41-6	1,2,3,7,8-Pentachlorodibenzofuran	pic	-	-	-	particle-bound
68	57117-44-9	1,2,3,6,7,8-Hexachlorodibenzofuran	pic	-	-	-	particle-bound
69	57-24-9	Strychnine	pic	-	-	-	particle-bound
70	57653-85-7	1,2,3,6,7,8-Hexachlorodibenzo(p)dioxin	pic	-	-	-	particle

Table 2 List of Organic COPCs and PICs

#	CAS Registry Number	Compound	Source	SSFM Indicator?	Henry's Law Constant (bar*m³/kgmol)	Henry's Law-Based Grouping	Offgas Phase Type
71	57-74-9	Chlordane	pic	-	-	-	particle-bound
72	584-84-9	2,4-Toluene diisocyante	pic	-	-	-	vapor
73	593-60-2	Bromoethene	pic	-	-	-	vapor
74	60-11-7	Dimethyl aminoazobenzene	pic	-	-	-	particle-bound
75	606-20-2	2,6-Dinitrotoluene	pic	-	-	-	vapor
76	60851-34-5	2,3,4,6,7,8-Hexachlorodibenzofuran	pic	-	-	-	particle-bound
77	608-93-5	Pentachlorobenzene	pic	-	-	-	vapor
78	61626-71-9	Dichloropentadiene	pic	-	-	-	vapor
79	62-50-0	Ethyl methanesulfonate	pic	-	-	-	vapor
80	62-53-3	Aniline	pic	-	-	-	vapor
81	65-85-0	Benzoic acid	pic	-	-	-	vapor
82	67562-39-4	1,2,3,4,6,7,8-Heptachlorodibenzofuran	pic	-	-	-	particle
83	70-30-4	Hexachlorophene	pic	-	-	-	particle
84	70648-26-9	1,2,3,4,7,8-Hexachlorodibenzofuran	pic	-	-	-	particle
85	72918-21-9	1,2,3,7,8,9-Hexachlorodibenzofuran	pic	-	-	-	particle-bound
86	74-88-4	Iodomethane (Methyl iodide)	pic	-	-	-	vapor
87	74-95-3	Methylene bromide	pic	-	-	-	vapor
88	75-25-2	Bromoform	pic	-	-	-	vapor
89	75-29-6	2-Chloropropane	pic	-	-	-	vapor
90	75-44-5	Phosgene	pic	-	-	-	vapor
91	76-01-7	Pentachloroethane	pic	-	-	-	vapor
92	764-41-0	1,4-Dichloro-2-butene	pic	-	-	-	vapor
93	765-34-4	Glycidylaldehyde	pic	-	-	-	vapor
94	77-47-4	Hexachlorocyclopentadiene	pic	-	-	-	vapor
95	77-78-1	Dimethyl sulfate	pic	-	-	-	vapor
96	80-62-6	Methyl methacrylate	pic	-	-	-	vapor
97	822-06-0	Hexamethylene-1,5-diisocyanate	pic	-	-	-	vapor
98	823-40-5	Toluene-2,6-diamine	pic	-	-	-	vapor
99	85-44-9	Phthalic anhydride	pic	-	-	-	vapor
100	87-61-6	1,2,3-Trichlorobenzene	pic	-	-	-	vapor
101	88-74-4	o-Nitroaniline (2-Nitroaniline)	pic	-	-	-	vapor
102	90-04-0	o-Anisidine	pic	-	-	-	vapor
103	91-57-6	2-Methylnaphthalene	pic	-	-	-	vapor
104	91-94-1	3,3'-Dichlorobenzidine	pic	-	-	-	particle-bound
105	924-16-3	N-Nitrosodi-n-butylamine	pic	-	-	-	vapor
106	94-59-7	Safrole	pic	-	-	-	vapor
107	95-53-4	o-Toluidine	pic	-	-	-	vapor
108	95-63-6	1,2,4-Trimethyl benzene	pic	-	-	-	vapor
109	95-94-3	1,2,4,5-Tetrachlorobenzene	pic	-	-	-	vapor
110	96-12-8	1,2-Dibromo-3-chloropropane	pic	-	-	-	vapor

Table 2 List of Organic COPCs and PICs

#	CAS Registry Number	Compound	Source	SSFM Indicator?	Henry's Law Constant (bar*m³/kgmol)	Henry's Law-Based Grouping	Offgas Phase Type
111	96-18-4	1,2,3-Trichloropropane	pic	-	-	-	vapor
112	96-45-7	Ethylene thiourea	pic	-	-	-	particle-bound
113	97-63-2	Ethyl methacrylate	pic	-	-	-	vapor
114	98-01-1	Furfural	pic	-	-	-	vapor
115	98-06-6	tert-Butyl benzene	pic	-	-	-	vapor
116	98-07-7	Benzotrichloride	pic	-	-	-	vapor
117	99-35-4	1,3,5-Trinitrobenzene	pic	-	-	-	vapor
118	99-65-0	1,3-Dinitrobenzene	pic	-	-	-	vapor
119	99-87-6	p-Cymene	pic	-	-	-	vapor
120	no cas #	Dibenzo(a,h)fluoranthene	pic	-	-	-	particle-bound

Table 3 List of Inorganic COPCs and Criteria Pollutants

CAS Registry Number	Constituent	Constituent Family	SSFM Indicator?	Phase
14265-44-2	Phosphate	Non-metals and Anions	yes	particle
14280-30-9	Hydroxide	Non-metals and Anions	yes	particle
14797-55-8	Nitrate	Non-metals and Anions	yes	particle
14797-65-0	Nitrite	Non-metals and Anions	yes	particle
14808-79-8	Sulfate	Non-metals and Anions	yes	particle
16887-00-6	Chloride	Non-metals and Anions	yes	particle
16984-48-8	Fluoride	Non-metals and Anions	yes	particle
18540-29-9	Chromium (hexavalent)	Metals	yes	particle
24959-67-9	Bromide	Non-metals and Anions	-	particle
57-12-5	Cyanide	Non-metals and Anions	-	vapor
63705-05-5	Total Sulfur	Non-metals and Anions	yes	particle
7429-90-5	Aluminum	Metals	yes	particle
7439-89-6	Iron	Metals	yes	particle
7439-92-1	Lead	Metals	yes	particle
7439-93-2	Lithium	Metals	yes	particle
7439-95-4	Magnesium	Metals	yes	particle
7439-96-5	Manganese	Metals	yes	particle
7439-97-6	Mercury	Metals	yes	vapor
7439-98-7	Molybdenum	Metals	-	particle
7440-02-0	Nickel	Metals	yes	particle
7440-09-7	Potassium	Metals	yes	particle
7440-16-6	Rhodium	Metals	-	particle
7440-21-3	Silicon	Metals	yes	particle
7440-22-4	Silver	Metals	yes	particle
7440-23-5	Sodium	Metals	yes	particle
7440-24-6	Strontium (total)	Metals	yes	particle
7440-25-7	Tantalum	Metals	-	particle
7440-28-0	Thallium	Metals	-	particle
7440-31-5	Tin	Metals	-	particle
7440-33-7	Tungsten	Metals	-	particle
7440-36-0	Antimony	Metals	-	particle
7440-38-2	Arsenic	Metals	yes	particle
7440-39-3	Barium	Metals	yes	particle
7440-41-7	Beryllium	Metals	-	particle
7440-42-8	Boron	Metals	yes	particle
7440-43-9	Cadmium	Metals	yes	particle
7440-48-4	Cobalt	Metals	-	particle
7440-50-8	Copper	Metals	yes	particle
7440-61-1	Uranium	Metals	-	particle
7440-62-2	Vanadium	Metals	-	particle
7440-65-5	Yttrium	Metals	-	particle
7440-66-6	Zinc	Metals	yes	particle
7440-67-7	Zirconium	Metals	yes	particle

Table 3 List of Inorganic COPCs and Criteria Pollutants

CAS Registry Number	Constituent	Constituent Family	SSFM Indicator?	Phase
7440-69-9	Bismuth	Metals	yes	particle
7440-70-2	Calcium	Metals	yes	particle
7553-56-2	Iodine (I2)	Non-metals and Anions	-	vapor
7664-41-7	Ammonia	Non-metals and Anions	yes	vapor
7723-14-0	Phosphorous	Non-metals and Anions	yes	particle
7782-49-2	Selenium	Metals	-	particle
10028-15-6	Ozone	Criteria Pollutant	-	vapor
10102-44-0	Nitrogen dioxide	Criteria Pollutant	yes	vapor
10102-43-9	Nitric oxide	Criteria Pollutant	yes	vapor
630-08-0	Carbon monoxide	Criteria Pollutant	yes	vapor
7446-09-5	Sulfur dioxide	Criteria Pollutant	yes	vapor
no cas #	particulate matter	Criteria Pollutant	-	particle

Table 4 List of Radionuclide COPCs

CAS Registry Number	Constituent	SSFM Indicator?	Offgas Phase
10028-17-8	Tritium	yes	vapor
10045-97-3	Cesium-137	yes	particle
10098-91-6	Yttrium-90	-	particle
10098-97-2	Strontium-90	yes	particle
10198-40-0	Cobalt-60	yes	particle
13966-29-5	Uranium-234	yes	particle
13967-48-1	Ruthenium-106	-	particle
13967-70-9	Cesium-134	-	particle
13968-55-3	Uranium-233	yes	particle
13981-15-2	Curium-244	yes	particle
13981-16-3	Plutonium-238	yes	particle
13981-37-8	Nickel-63	yes	particle
13981-97-0	Barium-137m	-	particle
13982-10-0	Plutonium-242	-	particle
13982-63-3	Radium-226	-	particle
13982-70-2	Uranium-236	yes	particle
13994-20-2	Neptunium-237	yes	particle
14119-32-5	Plutonium-241	yes	particle
14119-33-6	Plutonium-240	yes	particle
14133-76-7	Technetium-99	yes	particle
14158-29-3	Uranium-232	-	particle
14234-35-6	Antimony-125	yes	particle
14331-85-2	Protactinium-231	-	particle
14336-70-0	Nickel-59	-	particle
14391-16-3	Europium-155	yes	particle
14596-10-2	Americium-241	yes	particle
14683-23-9	Europium-152	yes	particle
14762-75-5	Carbon-14	yes	vapor
14952-40-0	Actinium-227	-	particle
14993-75-0	Americium-243	-	particle
15046-84-1	Iodine-129	yes	vapor
15117-48-3	Plutonium-239	yes	particle
15117-96-1	Uranium-235	yes	particle
15262-20-1	Radium-228	-	particle
15510-73-3	Curium-242	-	particle
15585-10-1	Europium-154	yes	particle
15594-54-4	Thorium-229	-	particle
15715-94-3	Samarium-151	yes	particle
15751-77-6	Zirconium-93	-	particle
15757-87-6	Curium-243	yes	particle
15832-50-5	Tin-126	yes	particle
7440-03-1	Niobium-93m	-	particle
7440-29-1	Thorium-232	yes	particle
7440-61-1	Uranium-238	yes	particle
no cas #	Cadmium-113m	-	particle
no cas #	Selenium-79	-	particle

Table 5 Representative Compounds for Inorganics and Radionuclides

Radionuclide		Metals		Non-metals and Anions	
Unanalyzed Compound	Representative Compounds	Unanalyzed Compound	Representative Compounds	Unanalyzed Compound	Representative Compounds
Cs-134	Cs-137	Be	Zr	CN	PO_4
Ba-137m	Cs-137	Y	Sr-90	-	-
Ra-226	Zr	V	Bi	-	-
Ra-228	Zr	Ta	Zr	-	-
Ac-227	Zr	Mo	Bi	-	-
Y-90	Sr-90	W	Zr	-	-
Zr-93	Zr	Co	Co-60	-	-
Nb-93m	Zr	Rh	Zr	-	-
Ni-59	Ni-63	Tl	F	-	-
Ru-106	F	Sn	Sn-126	-	-
Cd-113m	Cd	Sb	Sb-125	-	-
Se-79	F	Se	F	-	-
Th-229	Th-232	U	U-234	-	-
Pa-231	Zr	-	-	-	-
U-232	U-233	-	-	-	-
Pu-242	Pu-241	-	-	-	-
Am-243	Am-241	-	-	-	-
Cm-242	Cm-243	-	-	-	-

Table 6 Estimated Organic Feed Concentrations

CAS #	COPC	Conc (mg/L)	In SSFM
100-00-5	p-Nitrochlorobenzene	84.8	No
100-21-0	p-Phthalic acid	84.8	Yes
100-25-4	1,4-Dinitrobenzene	84.8	No
100-41-4	Ethyl benzene	18.7	No
100-42-5	Styrene	18.7	No
10061-01-5	cis-1,3-Dichloropropene	18.7	Yes
10061-02-6	trans-1,3-Dichloropropene	18.7	No
101-55-3	4-Bromophenylphenyl ether	84.8	No
101-84-8	Diphenyl ether	18.7	No
106-35-4	3-Heptanone	18.7	No
106-42-3	p-Xylene (Dimethyl benzene)	18.7	No
106-46-7	1,4-Dichlorobenzene	18.7	No
106-88-7	1,2-Epoxybutane	18.7	No
106-93-4	Ethylene dibromide (Dibromethane)	84.8	Yes
106-97-8	Butane	18.7	Yes
106-99-0	1,3-Butadiene	18.7	Yes
107-02-8	Acrolein	18.7	No
107-05-1	3-Chloropropene (Allyl chloride)	18.7	No
107-06-2	1,2-Dichloroethane (Ethylene chloride)	18.7	No
107-12-0	Propionitrile	18.7	No
107-13-1	Acrylonitrile	18.7	No
107-18-6	2-Propene-1-ol	84.8	No
107-31-3	Formic acid, methyl ester	84.8	No
107-66-4	Dibutylphosphate	84.8	No
107-87-9	2-Pentanone	18.7	No
108-03-2	1-Nitropropane	84.8	No
108-05-4	Vinyl acetate	84.8	No
108-10-1	Hexone (4-Methyl-2-pentanone or MIBK)	18.7	No
108-20-3	Bis(isopropyl)ether	18.7	No
108-38-3	m-Xylene (Dimethyl benzene)	18.7	No
108-39-4	m-Cresol	18.7	No
108-87-2	Methylcyclohexane	18.7	Yes
108-88-3	Toluene	18.7	Yes
108-90-7	Chlorobenzene	18.7	No
108-93-0	Cyclohexanol	18.7	No
108-94-1	Cyclohexanone	18.7	No
108-95-2	Phenol	84.8	Yes
109-66-0	n-Pentane	18.7	No
109-99-9	Tetrahydrofuran	39.6	No
110-12-3	5-Methyl-2-hexanone	18.7	No
110-43-0	2-Heptanone	18.7	No
110-54-3	n-Hexane	18.7	Yes
110-62-3	n-Valeraldehyde	84.8	No
110-82-7	Cyclohexane	18.7	Yes
110-83-8	Cyclohexene	18.7	No

Table 6 Estimated Organic Feed Concentrations

CAS #	COPC	Conc (mg/L)	In SSFM
110-86-1	Pyridine	84.8	No
111-65-9	n-Octane	18.7	No
111-76-2	Ethylene glycol monobutyl ether	84.8	No
111-84-2	n-Nonane	18.7	Yes
117-81-7	Bis(2-ethylhexyl)phthalate (DEHP)	84.8	No
117-84-0	n-Dioctyl phthalate	84.8	No
118-74-1	Hexachlorobenzene	1.8	Yes
120-12-7	Anthracene	84.8	Yes
120-82-1	1,2,4-Trichlorobenzene	18.7	Yes
120-83-2	2,4-Dichlorophenol	84.8	No
121-44-8	Triethylamine	18.7	No
121-69-7	Dimethylaniline	18.7	No
122-39-4	N,N-Diphenylamine	18.7	Yes
123-19-3	4-Heptanone	18.7	No
123-38-6	n-Propionaldehyde	18.7	No
123-51-3	3-Methyl-1-butanol	18.7	No
123-86-4	Acetic acid n-butyl ester	84.8	No
123-91-1	1,4-Dioxane	50.9	No
126-73-8	Tributyl phosphate	84.8	Yes
126-98-7	2-Methyl-2-propenenitrile (Methacrylonitrile)	18.7	No
127-18-4	Perchloroethylene (tetrachloroethylene)	18.7	Yes
127-19-5	N,N-Dimethylacetamide	18.7	No
128-37-0	2,6-Bis(tert-butyl)-4-methylphenol	84.8	No
129-00-0	Pyrene	84.8	Yes
1321-64-8	Pentachloronaphthalene	84.8	No
1321-65-9	Trichloronaphthalene	84.8	No
132-64-9	Dibenzofuran	84.8	Yes
1335-87-1	Hexachloronaphthalene	84.8	No
1335-88-2	Tetrachloronaphthalene	84.8	No
1336-36-3	Polychlorinated biphenyls (PCBs)	29.4	Yes
141-78-6	Acetic acid ethyl ester (Ethyl acetate)	84.8	No
141-79-7	4-Methyl-3-penten-2-one	84.8	No
142-82-5	n-Heptane	18.7	No
144-62-7	Oxalic acid	8.5	Yes
156-60-5	trans-1,2-Dichloroethylene	18.7	No
1582-09-8	Trifluralin	84.8	No
1634-04-4	Methyl tert-butyl ether	18.7	No
1836-75-5	Nitrofen	84.8	No
189-55-9	Dibenzo[a,i]pyrene	84.8	No
189-64-0	Dibenzo[a,h]pyrene	84.8	No
191-24-2	Benzo(g,h,i)perylene	84.8	No
191-30-0	Benzo[a,i]pyrene	84.8	No
192-65-4	Dibenzo[a,e]pyrene	84.8	No
193-39-5	Indeno(1,2,3-cd)pyrene	84.8	No
205-82-3	Benzo(j)fluoranthene	84.8	No
205-99-2	Benzo(b)fluoranthene	84.8	No

Table 6 Estimated Organic Feed Concentrations

CAS #	COPC	Conc (mg/L)	In SSFM
206-44-0	Fluoranthene	84.8	No
207-08-9	Benzo(k)fluoranthene	84.8	No
208-96-8	Acenaphthylene	84.8	Yes
218-01-9	Chrysene	84.8	Yes
2234-13-1	Octachloronaphthalene	84.8	No
224-42-0	Dibenz[a,j]acridine	84.8	No
226-36-8	Dibenz[a,h]acridine	84.8	No
2385-85-5	Mirex	84.8	No
2551-13-7	Trimethyl benzene	18.7	No
26140-60-3	Terphenyls	84.8	No
27154-33-2	Trichlorofluoroethane	18.7	No
287-92-3	Cyclopentane	18.7	No
309-00-2	Aldrin	1.0	Yes
319-84-6	Hexachlorocyclohexane (Lindane) Alpha BHC	0.3	No
319-85-7	Hexachlorocyclohexane (Lindane) Beta BHC	0.3	Yes
319-86-8	Delta-BHC	0.3	No
3697-24-3	5-Methylchrysene	84.8	No
3825-26-1	Ammonium perfluorooctanoate	84.8	No
4170-30-3	2-Butenaldehyde (2-Butenal or Crotonaldehyde)	18.7	Yes
465-73-6	Isodrin	0.6	No
50-00-0	Formaldehyde	18.7	No
50-29-3	4,4-DDT	0.6	No
50-32-8	Benzo(a)pyrene	1.1	Yes
53-70-3	Dibenzo(a,h)anthracene	0.1	No
540-59-0	1,2-Dichloroethylene	18.7	No
540-84-1	2,2,4-Trimethylpentane	18.7	No
541-73-1	1,3-Dichlorobenzene	18.7	No
56-23-5	Carbon tetrachloride	18.7	Yes
563-80-4	3-Methyl-2-butanone	18.7	No
56-49-5	3-Methylcholanthrene	84.8	No
56-55-3	Benzo(a)anthracene	84.8	No
57-14-7	1,1-Dimethylhydrazine	84.8	Yes
58-89-9	gamma-BHC (Lindane)	0.3	Yes
58-90-2	2,3,4,6-Tetrachlorophenol	84.8	Yes
591-78-6	2-Hexanone	18.7	No
59-50-7	4-Chloro-3-methylphenol	84.8	No
59-89-2	N-Nitrosomorpholine	84.8	No
602-87-9	5-Nitroacenaphthene	84.8	No
60-29-7	Ethyl ether	84.8	No
603-34-9	Triphenylamine	84.8	Yes
60-34-4	Methylhydrazine	18.7	No
60-35-5	Acetamide	18.7	Yes
60-57-1	Dieldrin	0.6	Yes
621-64-7	Di-n-Propylnitrosamine (N-Nitroso-di-n-propylamine)	84.8	No
624-83-9	Methyl isocyanate	18.7	No
627-13-4	Nitric acid, propyl ester	84.8	No

Table 6 Estimated Organic Feed Concentrations

CAS #	COPC	Conc (mg/L)	In SSFM
62-75-9	N-Nitroso-N,N-dimethylamine (Dimethylnitrosamine)	158.4	Yes
630-20-6	1,1,1,2-Tetrachloroethane	18.7	No
64-17-5	Ethyl alcohol	18.7	No
64-18-6	Formic acid	84.8	No
64-19-7	Acetic acid	84.8	No
67-56-1	Methyl alcohol (Methanol)	18.7	No
67-63-0	2-Propyl alcohol (Isopropanol; Propan-2-01)	18.7	No
67-64-1	2-Propanone (Acetone)	101.8	No
67-66-3	Chloroform	18.7	No
67-72-1	Hexachloroethane	84.8	No
684-16-2	Hexafluoroacetone	18.7	No
71-23-8	n-Propyl alcohol	18.7	No
71-36-3	n-Butyl alcohol	18.7	No
71-43-2	Benzene	18.7	Yes
71-55-6	Methyl chloroform (1,1,1-Trichloroethane)	18.7	No
72-20-8	Endrin	0.6	No
72-43-5	Methoxychlor	2.8	No
72-54-8	4,4-DDD	0.6	No
72-55-9	4,4-DDE	0.6	No
74-83-9	Bromomethane (Methyl bromide)	18.7	No
74-87-3	Chloromethane (Methyl chloride)	18.7	No
74-97-5	Bromochloromethane	18.7	No
74-99-7	Methylacetylene	84.8	No
75-00-3	Chloroethane	18.7	No
75-01-4	Vinyl chloride (1-Chloroethene)	84.8	No
75-05-8	Acetonitrile	26.6	Yes
75-07-0	Acetaldehyde	84.8	No
75-09-2	Dichloromethane (Methylene chloride)	18.7	No
75-12-7	Formamide	84.8	Yes
75-15-0	Carbon disulfide	18.7	No
75-21-8	Ethylene oxide (Oxirane)	18.7	No
75-27-4	Bromodichloromethane	18.7	No
75-34-3	1,1-Dichloroethane	18.7	No
75-35-4	1,1-Dichloroethene (Vinylidene chloride)	18.7	No
75-43-4	Dichlorofluoromethane	18.7	No
75-45-6	Chlorodifluoromethane	18.7	No
75-50-3	Trimethylamine	18.7	No
75-52-5	Nitromethane	84.8	No
75-55-8	2-Methylaziridine	84.8	No
75-61-6	Difluorodibromomethane	18.7	No
75-63-8	Trifluorobromomethane	18.7	No
75-65-0	2-Methyl-2-propanol	18.7	No
75-69-4	Trichlorofluoromethane	18.7	No
75-71-8	Dichlorodifluoromethane	18.7	No
75-99-0	2,2-Dichloropropionic acid	84.8	No
76-03-9	Trichloroacetic acid	18.7	No

Table 6 Estimated Organic Feed Concentrations

CAS #	COPC	Conc (mg/L)	In SSFM
76-11-9	1,1,1,2-Tetrachloro-2,2-difluoroethane	84.8	No
76-12-0	1,1,2,2-Tetrachloro-1,2-difluoroethane	84.8	No
76-13-1	1,2,2-Trichloro-1,1,2-trifluoroethane (Freon 113)	18.7	No
76-14-2	1,2-Dichloro-1,1,2,2-tetrafluoroethane	18.7	No
76-15-3	Chloropentafluoroethane	18.7	Yes
76-44-8	Heptachlor	1.8	Yes
78-83-1	2-Methylpropyl alcohol (Isobutyl alcohol)	84.8	No
78-87-5	1,2-Dichloropropane	18.7	No
78-92-2	1-Methylpropyl alcohol (2-Butanol)	18.7	No
78-93-3	Methyl ethyl ketone (MEK, 2-Butanone)	18.7	No
79-00-5	1,1,2-Trichloroethane	18.7	No
79-01-6	Trichloroethylene	18.7	Yes
79-09-4	Propionic acid	84.8	No
79-10-7	2-Propenoic acid	84.8	No
79-20-9	Methyl acetate	84.8	No
79-34-5	1,1,2,2-Tetrachloroethane	18.7	No
8001-35-2	Toxaphene	0.7	Yes
82-68-8	Pentachloronitrobenzene (PCBN or quintobenzene)	84.8	No
83-32-9	Acenaphthene	84.8	No
84-66-2	Diethyl phthalate	84.8	Yes
84-74-2	Dibutyl phthalate	84.8	Yes
85-01-8	Phenanthrene	84.8	No
85-68-7	Butylbenzyl phthalate	84.8	No
86-73-7	Fluorene	84.8	No
87-68-3	Hexachlorobutadiene	18.7	Yes
87-86-5	Pentachlorophenol	84.8	Yes
88-06-2	2,4,6-Trichlorophenol	84.8	No
88-72-2	2-Nitrotoluene	18.7	No
88-75-5	2-Nitrophenol	84.8	No
88-85-7	2-sec-Butyl-4,6-dinitrophenol (Dinoseb)	84.8	Yes
88-89-1	Picric acid	84.8	Yes
91-20-3	Naphthalene	2.8	Yes
91-22-5	Quinoline	84.8	No
91-58-7	2-Chloronapthalene	84.8	No
92-52-4	1,1'-Biphenyl	84.8	No
92-93-3	4-Nitrobiphenyl	84.8	No
93-72-1	Silvex (2,4,5-TP)	84.8	No
93-76-5	2,4,5-T	84.8	No
94-75-7	2,4-D and esters (160C typed)	84.8	No
95-13-6	Indene	84.8	No
95-47-6	o-Xylene	18.7	No
95-48-7	o-Cresol (2-Methylphenol)	18.7	No
95-49-8	2-Chlorotoluene	84.8	No
95-50-1	o-Dichlorobenzene (1,2-Dichlorobenzene)	18.7	No
95-57-8	2-Chlorophenol	84.8	No
95-95-4	2,4,5-Trichlorophenol	84.8	No

Table 6 Estimated Organic Feed Concentrations

CAS #	COPC	Conc (mg/L)	In SSFM
96-22-0	3-Pentanone	18.7	No
96-69-5	Bis(3-tert-butyl-4-hydroxy-6-methyl-phenyl)sulfide	84.8	No
98-51-1	p-tert-Butyltoluene	84.8	No
98-82-8	Cumene	84.8	No
98-83-9	alpha-Methylstyrene	18.7	No
98-86-2	Acetophenone	84.8	Yes
98-95-3	Nitrobenzene	84.8	No

Table 7 Estimated LAW Feed Concentrations

LAW Chemical Analytes Emissions Feed Vector			
Analyte	mol/mol Na	Analyte	mol/mol Na
Ag	1.21E-04	NO2	1.96E-01
Al	2.50E-01	NO3	4.12E-01
As	6.11E-04	OH	1.55E+00
B	6.46E-03	Oxalate	2.58E-01
Ba	1.00E-04	Pb	6.80E-04
Be	1.21E-04	Pd	8.04E-06
Bi	2.02E-04	PO4	6.70E-02
Ca	4.00E-02	Pr	3.49E-07
Cd	4.00E-03	Rb	1.35E-05
Ce	3.02E-04	Rh	5.54E-05
Cl	4.59E-02	Ru	6.13E-05
CN	2.89E-04	Sb	1.07E-04
Co	1.67E-04	Se	2.04E-04
Cr	2.00E-02	Si	1.68E-02
Cu	2.21E-04	SO4	3.61E-02
F	1.03E-01	Sr	4.82E-05
Fe	1.00E-02	Ta	2.95E-05
Hg	1.40E-05	Te	3.85E-07
K	1.80E-01	Th	2.15E-05
La	8.30E-05	Ti	9.66E-05
Li	3.95E-03	TIC as CO3	1.55E-01
Mg	1.78E-03	Tl	2.13E-04
Mn	4.87E-03	U(total)	6.18E-04
Mo	2.67E-04	V	2.14E-04
Na	1.00E+00	W	2.01E-04
Nd	1.69E-04	Y	2.02E-05
NH3	1.02E-02	Zn	4.05E-04
Ni	3.00E-03	Zr	3.59E-04
LAW Radionuclide Emissions Feed Vector			
Analyte	Bq/mol Na	Analyte	Bq/mol Na
106Ru	7.78E-01	236U	6.93E+02
113mCd	8.26E+05	237Np	7.78E+02
125Sb	1.99E+07	238Pu	2.06E+03
126Sn	1.49E+05	238U	4.45E+03
129I	2.88E+03	239Pu	2.44E+04
134Cs	3.70E+07	240Pu	4.31E+03
137Cs	2.00E+10	241Am	3.46E+05
137mBa	1.36E+10	241Pu	1.01E+05
14C	2.64E+05	242Cm	4.49E+02
151Sm	2.47E+08	242Pu	2.79E-01
152Eu	1.30E+06	243Am	7.29E+00
154Eu	4.30E+06	243Cm	7.25E+01

Table 7 Estimated LAW Feed Concentrations

LAW Radionuclide Emissions Feed Vector			
Analyte	Bq/mol Na	Analyte	Bq/mol Na
155Eu	7.42E+06	244Cm	5.04E+02
226Ra	1.19E+00	3H	3.53E+06
227Ac	1.32E+01	59Ni	1.29E+04
228Ra	2.31E+03	60Co	3.70E+05
229Th	5.43E+01	63Ni	2.37E+06
231Pa	3.85E+01	79Se	1.13E+04
232Th	5.54E+02	90Sr	8.00E+08
232U	1.30E+03	90Y	7.70E+08
233U	1.03E+04	93mNb	1.52E+05
234U	5.99E+03	93Zr	1.92E+05
235U	2.31E+02	99Tc	7.10E+06

Table 8 Estimated HLW Feed Concentrations

HLW Chemical Analytes Emissions Feed Vector			
Analyte	mol/mol Na	Analyte	mol/mol Na
Ag	6.17E-03	NO2	1.51E-01
Al	6.28E-01	NO3	7.03E-01
As	2.59E-03	OH	8.64E+00
B	1.46E-01	Oxalate	1.51E-01
Ba	3.97E-02	Pb	6.43E-03
Be	8.74E-03	Pd	1.48E-03
Bi	1.62E-02	PO4	1.18E-01
Ca	2.14E-01	Pr	3.01E-03
Cd	4.85E-02	Rb	2.69E-03
Ce	7.00E-03	Rh	1.53E-03
Cl	1.13E-02	Ru	4.19E-03
CN	7.45E-02	Sb	8.35E-03
Co	9.25E-03	Se	7.97E-03
Cr	1.58E-02	Si	8.19E-01
Cu	9.15E-03	SO4	1.67E-02
F	2.23E-01	Sr	7.19E-03
Fe	6.29E-01	Ta	2.01E-04
Hg	6.03E-04	Te	1.23E-03
K	4.02E-02	Th	2.61E-02
La	2.27E-02	Ti	3.29E-02
Li	2.46E-02	TIC as CO3	6.05E-01
Mg	1.05E-01	Tl	2.67E-03
Mn	1.43E-01	U(total)	7.12E-02
Mo	8.20E-03	V	7.61E-04
Na	1.00E+00	W	1.58E-03
Nd	1.43E-02	Y	2.18E-03
NH3	1.14E-01	Zn	7.77E-03
Ni	4.95E-02	Zr	1.99E-01
HLW Radionuclide Emissions Feed Vector			
Analyte	Bq/mol Na	Analyte	Bq/mol Na
106Ru	4.37E+06	236U	4.57E+03
113mCd	1.36E+07	237Np	3.31E+06
125Sb	1.43E+09	238Pu	1.57E+07
126Sn	6.72E+06	238U	8.24E+04
129I	1.30E+04	239Pu	1.39E+08
134Cs	3.15E+06	240Pu	7.61E+06
137Cs	6.72E+10	241Am	4.03E+09
137mBa	3.28E+09	241Pu	9.85E+08
14C	2.91E+05	242Cm	1.62E+05
151Sm	4.48E+09	242Pu	1.44E+03
152Eu	2.15E+07	243Am	3.95E+04
154Eu	2.33E+09	243Cm	1.34E+08

Table 8 Estimated HLW Feed Concentrations

HLW Radionuclide Emissions Feed Vector			
Analyte	Bq/mol Na	Analyte	Bq/mol Na
155Eu	1.30E+09	244Cm	1.34E+08
226Ra	1.52E+02	3H	2.91E+06
227Ac	7.68E+05	59Ni	2.27E+06
228Ra	1.59E+05	60Co	4.48E+08
229Th	6.63E+03	63Ni	2.12E+08
231Pa	1.69E+06	79Se	1.26E+05
232Th	3.52E+04	90Sr	4.48E+11
232U	1.36E+05	90Y	3.71E+10
233U	4.03E+04	93mNb	4.92E+06
234U	1.47E+05	93Zr	5.46E+06
235U	1.12E+04	99Tc	6.72E+08

Table 9 Summary of Assumed Stack Concentrations for PICs

CAS Registry Number	PIC Grouping or Individual Constituent	Assumed Stack Concentration (a) (ug/dscm)
various	volatile organic PICs (38 constituents)	2
various	semi-volatile PICs (61 constituents)	15
various	polycyclic aromatic PICs (4 constituents)	3
	dioxins/furans (17 constituents)	see below
1746-01-6	2,3,7,8-Tetrachlorodibenzo(p)dioxin (TCDD)	9.4E-06
19408-74-3	1,2,3,7,8,9-Hexachlorodibenzo(p)dioxin	1.6E-05
3268-87-9	Octachlorodibenzo(p)dioxin	7.8E-05
35822-46-9	1,2,3,4,6,7,8-Heptachlorodibenzo(p)dioxin	3.1E-05
39001-02-0	Octachlorodibenzofuran	6.3E-05
39227-28-6	1,2,3,4,7,8-Hexachlorodibenzo(p)dioxin	1.6E-05
40321-76-4	1,2,3,7,8-Pentachlorodibenzo(p)dioxin	1.6E-05
51207-31-9	2,3,7,8-Tetrachlorodibenzofuran	7.8E-06
55673-89-7	1,2,3,4,7,8,9-Heptachlorodibenzofuran	1.6E-05
57117-31-4	2,3,4,7,8-Pentachlorodibenzofuran	7.8E-06
57117-41-6	1,2,3,7,8-Pentachlorodibenzofuran	7.8E-06
57117-44-9	1,2,3,6,7,8-Hexachlorodibenzofuran	1.3E-05
57653-85-7	1,2,3,6,7,8-Hexachlorodibenzo(p)dioxin	1.6E-05
60851-34-5	2,3,4,6,7,8-Hexachlorodibenzofuran	1.4E-05
67562-39-4	1,2,3,4,6,7,8-Heptachlorodibenzofuran	1.6E-05
70648-26-9	1,2,3,4,7,8-Hexachlorodibenzofuran	1.4E-05
72918-21-9	1,2,3,7,8,9-Hexachlorodibenzofuran	1.6E-05

(a) - stack concentrations are based upon historical laboratory testing performed in support of the WTP

Table 10 Pretreatment Emissions Analysis Equipment Decontamination Factors

Inorganic Constituents[1]	Symbol	Rep	Caustic Scrubber		HEME		Primary HEPA		Secondary HEPA		Thermal Oxidizer		Carbon Bed Adsorber		Demister	
			DF	Reference	DF	Reference	DF	Reference	DF	Reference	DF	Reference	DF	Reference	DF	Reference
Silver	Ag^{+}		3.3	A	200	D	2,000	E	100	E	1	n/a	1	n/a	5	F
Aluminum	Al^{+3}		3.3	A	200	D	2,000	E	100	E	1	n/a	1	n/a	5	F
Arsenic	As^{+5}		3.3	A	200	D	2,000	E	100	E	1	n/a	1	n/a	5	F
Boron	B^{+3}		3.3	A	200	D	2,000	E	100	E	1	n/a	1	n/a	5	F
Barium	Ba^{+2}		3.3	A	200	D	2,000	E	100	E	1	n/a	1	n/a	5	F
Bismuth	Bi^{+3}		3.3	A	200	D	2,000	E	100	E	1	n/a	1	n/a	5	F
Calcium	Ca^{+2}		3.3	A	200	D	2,000	E	100	E	1	n/a	1	n/a	5	F
Cadmium	Cd^{+2}		3.3	A	200	D	2,000	E	100	E	1	n/a	1	n/a	5	F
Chloride	Cl^{-}		3.3	A	200	D	2,000	E	100	E	1	n/a	1	n/a	5	F
Chromium (hexavalent)	Cr^{+6}		3.3	A	200	D	2,000	E	100	E	1	n/a	1	n/a	5	F
Copper	Cu^{+2}		3.3	A	200	D	2,000	E	100	E	1	n/a	1	n/a	5	F
Fluoride	F^{-}		3.3	A	200	D	2,000	E	100	E	1	n/a	1	n/a	5	F
Iron	Fe^{+3}		3.3	A	200	D	2,000	E	100	E	1	n/a	1	n/a	5	F
Mercury	Hg^{+2}		1	n/a	1	n/a	1	n/a	1	n/a	1	n/a	1	n/a	1	n/a
Potassium	K^{+}		3.3	A	200	D	2,000	E	100	E	1	n/a	1	n/a	5	F
Lithium	Li^{+}		3.3	A	200	D	2,000	E	100	E	1	n/a	1	n/a	5	F
Magnesium	Mg^{+2}		3.3	A	200	D	2,000	E	100	E	1	n/a	1	n/a	5	F
Manganese	Mn^{+2}		3.3	A	200	D	2,000	E	100	E	1	n/a	1	n/a	5	F
Sodium	Na^{+}		3.3	A	200	D	2,000	E	100	E	1	n/a	1	n/a	5	F
Nickel	Ni^{+2}		3.3	A	200	D	2,000	E	100	E	1	n/a	1	n/a	5	F
Nitrite	NO_3^{-}		3.3	A	200	D	2,000	E	100	E	1	n/a	1	n/a	5	F
Nitrate	NO_2^{-}		3.3	A	200	D	2,000	E	100	E	1	n/a	1	n/a	5	F
Hydroxide	OH^{-}		3.3	A	200	D	2,000	E	100	E	1	n/a	1	n/a	5	F
Phosphorus	P^{+5}		3.3	A	200	D	2,000	E	100	E	1	n/a	1	n/a	5	F
Lead	Pb^{+2}		3.3	A	200	D	2,000	E	100	E	1	n/a	1	n/a	5	F
Phosphate	PO_4^{-3}		3.3	A	200	D	2,000	E	100	E	1	n/a	1	n/a	5	F
Total Sulfur	S^{+6}		3.3	A	200	D	2,000	E	100	E	1	n/a	1	n/a	5	F
Silicon	Si^{+4}		3.3	A	200	D	2,000	E	100	E	1	n/a	1	n/a	5	F
Sulfate	SO_4^{-2}		3.3	A	200	D	2,000	E	100	E	1	n/a	1	n/a	5	F
Strontium (total)	Sr^{+2}		3.3	A	200	D	2,000	E	100	E	1	n/a	1	n/a	5	F
Zinc	Zn^{+2}		3.3	A	200	D	2,000	E	100	E	1	n/a	1	n/a	5	F
Zirconium	Zr^{+4}		3.3	A	200	D	2,000	E	100	E	1	n/a	1	n/a	5	F
Beryllium	Be	Zr^{+4}	3.3	A	200	D	2,000	E	100	E	1	n/a	1	n/a	5	F
Cyanide	CN	PO_4^{-3}	3.3	A	200	D	2,000	E	100	E	1	n/a	1	n/a	5	F
Cobalt	Co	^{60}Co	3.3	A	200	D	2,000	E	100	E	1	n/a	1	n/a	5	F
Molybdenum	Mo	Bi^{+3}	3.3	A	200	D	2,000	E	100	E	1	n/a	1	n/a	5	F
Rhodium	Rh	Zr^{+4}	3.3	A	200	D	2,000	E	100	E	1	n/a	1	n/a	5	F
Antimony	Sb	^{125}Sb	3.3	A	200	D	2,000	E	100	E	1	n/a	1	n/a	5	F
Selenium	Se	F^{-}	3.3	A	200	D	2,000	E	100	E	1	n/a	1	n/a	5	F
Tin	Sn	^{126}Sn	3.3	A	200	D	2,000	E	100	E	1	n/a	1	n/a	5	F
Tantalum	Ta	Zr^{+4}	3.3	A	200	D	2,000	E	100	E	1	n/a	1	n/a	5	F
Thallium	Tl	F^{-}	3.3	A	200	D	2,000	E	100	E	1	n/a	1	n/a	5	F
Uranium	U	^{238}U	3.3	A	200	D	2,000	E	100	E	1	n/a	1	n/a	5	F
Vanadium	V	Bi^{+3}	3.3	A	200	D	2,000	E	100	E	1	n/a	1	n/a	5	F
Tungsten	W	Zr^{+4}	3.3	A	200	D	2,000	E	100	E	1	n/a	1	n/a	5	F
Yttrium	Y	^{90}Sr	3.3	A	200	D	2,000	E	100	E	1	n/a	1	n/a	5	F
Carbon monoxide	CO		1	n/a	1	n/a	1	n/a	1	n/a	1	n/a	1	n/a	1	n/a
Carbon dioxide	CO_2		1	n/a	1	n/a	1	n/a	1	n/a	1	n/a	1	n/a	1	n/a
Nitric oxide	NO		1.5	B	1	n/a	1	n/a	1	n/a	1	n/a	1	n/a	1	n/a
Nitrogen dioxide	NO_2		1.5	B	1	n/a	1	n/a	1	n/a	1	n/a	1	n/a	1	n/a
Sulfur dioxide	SO_2		3	C	1	n/a	1	n/a	1	n/a	1	n/a	1	n/a	1	n/a
Ammonia/Ammonium	NH_3		3	C	1	n/a	1	n/a	1	n/a	1	n/a	1	n/a	1	n/a

Table 10 Pretreatment Emissions Analysis Equipment Decontamination Factors

Radionuclide Constituents[1]	Symbol	Rep	Caustic Scrubber		HEME		Primary HEPA		Secondary HEPA		Thermal Oxidizer		Carbon Bed Adsorber		Demister	
			DF	Reference	DF	Reference	DF	Reference	DF	Reference	DF	Reference	DF	Reference	DF	Reference
Americium-241	^{241}Am		3.3	A	200	D	2,000	E	100	E	1	n/a	1	n/a	5	F
Carbon-14	^{14}C		1	n/a	1	n/a	1	n/a	1	n/a	1	n/a	1	n/a	1	n/a
Cobalt-60	^{60}Co		3.3	A	200	D	2,000	E	100	E	1	n/a	1	n/a	5	F
Curium-243	^{243}Cm		3.3	A	200	D	2,000	E	100	E	1	n/a	1	n/a	5	F
Curium-244	^{244}Cm		3.3	A	200	D	2,000	E	100	E	1	n/a	1	n/a	5	F
Cesium-137	^{137}Cs		3.3	A	200	D	2,000	E	100	E	1	n/a	1	n/a	5	F
Europium-152	^{152}Eu		3.3	A	200	D	2,000	E	100	E	1	n/a	1	n/a	5	F
Europium-154	^{154}Eu		3.3	A	200	D	2,000	E	100	E	1	n/a	1	n/a	5	F
Europium-155	^{155}Eu		3.3	A	200	D	2,000	E	100	E	1	n/a	1	n/a	5	F
Tritium	^{3}H		1	n/a	1	n/a	1	n/a	1	n/a	1	n/a	1	n/a	1	n/a
Iodine-129	^{129}I		3.3	A	1	n/a	1	n/a	1	n/a	1	n/a	1	n/a	1	n/a
Nickel-63	^{63}Ni		3.3	A	200	D	2,000	E	100	E	1	n/a	1	n/a	5	F
Neptunium-237	^{237}Np		3.3	A	200	D	2,000	E	100	E	1	n/a	1	n/a	5	F
Plutonium-238	^{238}Pu		3.3	A	200	D	2,000	E	100	E	1	n/a	1	n/a	5	F
Plutonium-239	^{239}Pu		3.3	A	200	D	2,000	E	100	E	1	n/a	1	n/a	5	F
Plutonium-240	^{240}Pu		3.3	A	200	D	2,000	E	100	E	1	n/a	1	n/a	5	F
Plutonium-241	^{241}Pu		3.3	A	200	D	2,000	E	100	E	1	n/a	1	n/a	5	F
Antimony-125	^{125}Sb		3.3	A	200	D	2,000	E	100	E	1	n/a	1	n/a	5	F
Samarium-151	^{151}Sm		3.3	A	200	D	2,000	E	100	E	1	n/a	1	n/a	5	F
Tin-126	^{126}Sn		3.3	A	200	D	2,000	E	100	E	1	n/a	1	n/a	5	F
Strontium-90	^{90}Sr		3.3	A	200	D	2,000	E	100	E	1	n/a	1	n/a	5	F
Technetium-99	^{99}Tc		3.3	A	200	D	2,000	E	100	E	1	n/a	1	n/a	5	F
Thorium-232	^{232}Th		3.3	A	200	D	2,000	E	100	E	1	n/a	1	n/a	5	F
Uranium-233	^{233}U		3.3	A	200	D	2,000	E	100	E	1	n/a	1	n/a	5	F
Uranium-234	^{234}U		3.3	A	200	D	2,000	E	100	E	1	n/a	1	n/a	5	F
Uranium-235	^{235}U		3.3	A	200	D	2,000	E	100	E	1	n/a	1	n/a	5	F
Uranium-236	^{236}U		3.3	A	200	D	2,000	E	100	E	1	n/a	1	n/a	5	F
Uranium-238	^{238}U		3.3	A	200	D	2,000	E	100	E	1	n/a	1	n/a	5	F
Yttrium-90	^{90}Y	^{90}Sr	3.3	A	200	D	2,000	E	100	E	1	n/a	1	n/a	5	F
Ruthenium-106	^{106}Ru	F	3.3	A	200	D	2,000	E	100	E	1	n/a	1	n/a	5	F
Cesium-134	^{134}Cs	^{137}Cs	3.3	A	200	D	2,000	E	100	E	1	n/a	1	n/a	5	F
Barium-137m	^{137m}Ba	^{137}Cs	3.3	A	200	D	2,000	E	100	E	1	n/a	1	n/a	5	F
Plutonium-242	^{242}Pu	^{244}Pu	3.3	A	200	D	2,000	E	100	E	1	n/a	1	n/a	5	F
Radium-226	^{226}Ra	Zr^{+4}	3.3	A	200	D	2,000	E	100	E	1	n/a	1	n/a	5	F
Uranium-232	^{232}U	^{233}U	3.3	A	200	D	2,000	E	100	E	1	n/a	1	n/a	5	F
Protactinium-231	^{231}Pa	Zr^{+4}	3.3	A	200	D	2,000	E	100	E	1	n/a	1	n/a	5	F
Nickel-59	^{59}Ni	^{63}Ni	3.3	A	200	D	2,000	E	100	E	1	n/a	1	n/a	5	F
Actinium-227	^{227}Ac	Zr^{+4}	3.3	A	200	D	2,000	E	100	E	1	n/a	1	n/a	5	F
Americium-243	^{243}Am	^{241}Am	3.3	A	200	D	2,000	E	100	E	1	n/a	1	n/a	5	F
Radium-228	^{228}Ra	Zr^{+4}	3.3	A	200	D	2,000	E	100	E	1	n/a	1	n/a	5	F
Curium-242	^{242}Cm	^{243}Cm	3.3	A	200	D	2,000	E	100	E	1	n/a	1	n/a	5	F
Thorium-229	^{229}Th	^{232}Th	3.3	A	200	D	2,000	E	100	E	1	n/a	1	n/a	5	F
Zirconium-93	^{93}Zr	Zr^{+4}	3.3	A	200	D	2,000	E	100	E	1	n/a	1	n/a	5	F
Niobium-93m	^{93m}Nb	Zr^{+4}	3.3	A	200	D	2,000	E	100	E	1	n/a	1	n/a	5	F
Cadmium-113m	^{113m}Cd	Cd^{+2}	3.3	A	200	D	2,000	E	100	E	1	n/a	1	n/a	5	F
Selenium-79	^{79}Se	I^{-}	3.3	A	200	D	2,000	E	100	E	1	n/a	1	n/a	5	F

Notes:

1 – Mercury in the Pretreatment offgas is assumed to be in the vapor phase

2 – ^{3}H and ^{14}C are assumed to have the same DF as water and CO_2, respectively; therefore, a DF of 1 has been specified for these constituents

A – Recommended particulate DF for low energy wet scrubber, Lane Regional Air Pollution Authority (LRAPA), *Rules and Regulations: Title 13, Adopt Source Interim Emission Fee Rules*, Section 35-065, http://www.lrapa.org/rules/title35.htm

B – Recommended NOx DF, *Sizing of PT Vessel Vent Caustic Scrubber PVP-SCB-00002*, calculation 24590-PTF-MVC-PVP-00013, Rev. A

C – Assumption

D – Recommended particulate DF, *PT Vessel Vents HEME Sizing - (Sheet PT-540)*, calculation CALC-W375PT-PR00103, Rev. 2

E – Emissions particulate DF, *Best Available Radionuclide Control Technology Analysis for the WTP*, 24590-WTP-RPT-ENV-01-004, Rev. 1

F – Tables 2.14-2 – 3, *Flowsheet Bases, Assumptions, and Requirements*, 24590-WTP-RPT-PT-02-005, Rev. 1

n/a – No removal is expected for this constituent

Table 11 Summary of Offgas Treatment Equipment DFs for Organic COPCs

CAS Registry Number	Compound	Phase	PT HEME	PT Thermal Oxidizer	PT Caustic Scrubber	PT Carbon Bed Adsorber	PT PJM/RFD Demister	HLW & LAW Melters	HLW & LAW Submerged Bed Scrubber	HLW & LAW WESP	HLW HEME	LAW Caustic Scrubber	All HEPAs (First)	All HEPAs (Second)	HLW & LAW Thermal Catalytic Oxidizer
100-00-5	p-Nitrochlorobenzene	vapor	1	10000	1	5	1	1.1	1	1	1	1	1	1	20
100-21-0	p-Phthalic acid	vapor	1	20	1	50	1	1.1	1	1	1	1	1	1	20
100-25-4	1,4-Dinitrobenzene	vapor	1	10000	1	5	1	1.1	1	1	1	1	1	1	20
100-41-4	Ethylbenzene	vapor	1	10000	1	1	1	1.1	1	1	1	1	1	1	20
100-42-5	Styrene	vapor	1	10000	1	1	1	1.1	1	1	1	1	1	1	20
10061-01-5	cis-1,3-Dichloropropene	vapor	1	100	1	1	1	1.1	1	1	1	1	1	1	20
10061-02-6	trans-1,3-Dichloropropene	vapor	1	50	1	1	1	1.1	1	1	1	1	1	1	20
101-55-3	4-Bromophenylphenyl ether	vapor	1	3.33333333	1	50	1	1.1	1	1	1	1	1	1	20
101-84-8	Diphenyl ether	vapor	1	50	1	5	1	1.1	1	1	1	1	1	1	20
106-35-4	3-Heptanone	vapor	1	10000	1	1	1	1.1	1	1	1	1	1	1	20
106-42-3	p-Xylene (Dimethyl benzene)	vapor	1	1000	1	1	1	1.1	1	1	1	1	1	1	20
106-46-7	1,4-Dichlorobenzene	vapor	1	50	1	2	1	1.1	1	1	1	1	1	1	20
106-88-7	1,2-Epoxybutane	vapor	1	10000	1	1	1	1.1	1	1	1	1	1	1	20
106-93-4	Ethylene dibromide (Dibromoethane)	vapor	1	1	1	10	1	1.1	1	1	1	1	1	1	20
106-97-8	Butane	vapor	1	10000	1	1	1	1.1	1	1	1	1	1	1	20
106-99-0	1,3-Butadiene	vapor	1	10000	1	1	1	1.1	1	1	1	1	1	1	20
107-02-8	Acrolein	vapor	1	10000	1	1	1	1.1	1	1	1	1	1	1	20
107-05-1	3-Chloropropene (Allyl chloride)	vapor	1	10000	1	1	1	1.1	1	1	1	1	1	1	20
107-06-2	1,2-Dichloroethane (Ethylene chloride)	vapor	1	10000	1	1	1	1.1	1	1	1	1	1	1	20
107-12-0	Propionitrile	vapor	1	1000	1	1	1	1.1	1	1	1	1	1	1	20
107-13-1	Acrylonitrile	vapor	1	10000	1	1	1	1.1	1	1	1	1	1	1	20
107-18-6	2-Propene-1-ol	vapor	1	10000	1	1	1	1.1	1	1	1	1	1	1	20
107-31-3	Formic acid, methyl ester	vapor	1	10000	1	1	1	1.1	1	1	1	1	1	1	20
107-66-4	Dibutylphosphate	vapor	1	1000	1	1	1	1.1	1	1	1	1	1	1	20
107-87-9	2-Pentanone	vapor	1	10000	1	1	1	1.1	1	1	1	1	1	1	20
108-03-2	1-Nitropropane	vapor	1	10000	1	1	1	1.1	1	1	1	1	1	1	20
108-05-4	Vinyl acetate	vapor	1	10000	1	1	1	1.1	1	1	1	1	1	1	20
108-10-1	Hexone (4-Methyl-2-pentanone or MIBK)	vapor	1	10000	1	1	1	1.1	1	1	1	1	1	1	20
108-20-3	Bis(isopropyl)ether	vapor	1	10000	1	1	1	1.1	1	1	1	1	1	1	20
108-38-3	m-Xylene (Dimethyl benzene)	vapor	1	1000	1	1	1	1.1	1	1	1	1	1	1	20
108-39-4	m-Cresol	vapor	1	1000	1	2	1	1.1	1	1	1	1	1	1	20
108-87-2	Methylcyclohexane	vapor	1	10000	1	1	1	1.1	1	1	1	1	1	1	20
108-88-3	Toluene	vapor	1	10000	1	1	1	1.1	1	1	1	1	1	1	20
108-90-7	Chlorobenzene	vapor	1	20	1	5	1	1.1	1	1	1	1	1	1	20
108-93-0	Cyclohexanol	vapor	1	10000	1	2	1	1.1	1	1	1	1	1	1	20
108-94-1	Cyclohexanone	vapor	1	10000	1	2	1	1.1	1	1	1	1	1	1	20
108-95-2	Phenol	vapor	1	20	1	20	1	1.1	1	1	1	1	1	1	20
109-66-0	n-Pentane	vapor	1	10000	1	1	1	1.1	1	1	1	1	1	1	20
109-99-9	Tetrahydrofuran	vapor	1	10000	1	1	1	1.1	1	1	1	1	1	1	20
110-12-3	5-Methyl-2-hexanone	vapor	1	10000	1	1	1	1.1	1	1	1	1	1	1	20
110-43-0	2-Heptanone	vapor	1	10000	1	1	1	1.1	1	1	1	1	1	1	20
110-54-3	n-Hexane	vapor	1	10000	1	1	1	1.1	1	1	1	1	1	1	20
110-62-3	n-Valeraldehyde	vapor	1	10000	1	1	1	1.1	1	1	1	1	1	1	20
110-82-7	Cyclohexane	vapor	1	10000	1	1	1	1.1	1	1	1	1	1	1	20
110-83-8	Cyclohexene	vapor	1	10000	1	1	1	1.1	1	1	1	1	1	1	20
110-86-1	Pyridine	vapor	1	10000	1	1	1	1.1	1	1	1	1	1	1	20
111-65-9	n-Octane	vapor	1	10000	1	1	1	1.1	1	1	1	1	1	1	20
111-76-2	Ethylene glycol monobutyl ether	vapor	1	10000	1	2	1	1.1	1	1	1	1	1	1	20
111-84-2	n-Nonane	vapor	1	10000	1	2	1	1.1	1	1	1	1	1	1	20
117-81-7	Bis(2-ethylhexyl)phthalate (DEHP)	particle-bound	200	10000	3.3	5	5	1.1	40	11	90	1	2000	100	20
117-84-0	n-Dioctyl phthalate	particle-bound	200	10000	3.3	5	5	1.1	40	11	90	1	2000	100	20
118-74-1	Hexachlorobenzene	vapor	1	3.33333333	1	50	1	1.1	1	1	1	1	1	1	20

Table 11 Summary of Offgas Treatment Equipment DFs for Organic COPCs

CAS Registry Number	Compound	Phase	PT HEME	PT Thermal Oxidizer	PT Caustic Scrubber	PT Carbon Bed Adsorber	PT PJM/RFD Demister	HLW & LAW Melters	HLW & LAW Submerged Bed Scrubber	HLW & LAW WESP	HLW HEME	LAW Caustic Scrubber	All HEPAs (First)	All HEPAs (Second)	HLW & LAW Thermal Catalytic Oxidizer
120-12-7	Anthracene	vapor	1	1000	1	5	1	1.1	1	1	1	1	1	1	20
120-82-1	1,2,4-Trichlorobenzene	vapor	1	100	1	5	1	1.1	1	1	1	1	1	1	20
120-83-2	2,4-Dichlorophenol	vapor	1	3.33333333	1	50	1	1.1	1	1	1	1	1	1	20
121-44-8	Triethylamine	vapor	1	10000	1	1	1	1.1	1	1	1	1	1	1	20
121-69-7	Dimethylaniline	vapor	1	10000	1	2	1	1.1	1	1	1	1	1	1	20
122-39-4	N,N-Diphenylamine	vapor	1	50	1	5	1	1.1	1	1	1	1	1	1	20
123-19-3	4-Heptanone	vapor	1	10000	1	1	1	1.1	1	1	1	1	1	1	20
123-38-6	n-Propionaldehyde	vapor	1	10000	1	1	1	1.1	1	1	1	1	1	1	20
123-51-3	3-Methyl-1-butanol	vapor	1	10000	1	1	1	1.1	1	1	1	1	1	1	20
123-86-4	Acetic acid n-butyl ester	vapor	1	10000	1	1	1	1.1	1	1	1	1	1	1	20
123-91-1	1,4-Dioxane	vapor	1	10000	1	1	1	1.1	1	1	1	1	1	1	20
126-73-8	Tributyl phosphate	vapor	1	10000	1	5	1	1.1	1	1	1	1	1	1	20
126-98-7	2-Methyl-2-propenenitrile (Methacrylonitrile)	vapor	1	10000	1	1	1	1.1	1	1	1	1	1	1	20
127-18-4	Perchloroethylene (tetrachloroethylene)	vapor	1	1	1	10	1	1.1	1	1	1	1	1	1	20
127-19-5	N,N-Dimethylacetamide	vapor	1	10000	1	2	1	1.1	1	1	1	1	1	1	20
128-37-0	2,6-Bis(tert-butyl)-4-methylphenol	particle-bound	200	10000	3.3	5	5	1.1	40	11	90	1	2000	100	20
129-00-0	Pyrene	particle-bound	200	3.33333333	3.3	50	5	1.1	40	11	90	1	2000	100	20
1321-64-8	Pentachloronaphthalene	particle-bound	200	3.33333333	3.3	50	5	1.1	40	11	90	1	2000	100	20
1321-65-9	Trichloronaphthalene	particle-bound	200	3.33333333	3.3	50	5	1.1	40	11	90	1	2000	100	20
132-64-9	Dibenzofuran	vapor	1	3.33333333	1	50	1	1.1	1	1	1	1	1	1	20
1335-87-1	Hexachloronaphthalene	particle-bound	200	3.33333333	3.3	50	5	1.1	40	11	90	1	2000	100	20
1335-88-2	Tetrachloronaphthalene	particle-bound	200	3.33333333	3.3	50	5	1.1	40	11	90	1	2000	100	20
1336-36-3	Polychlorinated biphenyls (PCBs)	particle-bound	200	3.33333333	3.3	50	5	1.1	40	11	90	1	2000	100	20
141-78-6	Acetic acid ethyl ester (Ethyl acetate)	vapor	1	10000	1	1	1	1.1	1	1	1	1	1	1	20
141-79-7	4-Methyl-3-pentene-2-one	vapor	1	10000	1	1	1	1.1	1	1	1	1	1	1	20
142-82-5	n-Heptane	vapor	1	10000	1	1	1	1.1	1	1	1	1	1	1	20
144-62-7	Oxalic acid	vapor	1	10	1	20	1	1.1	1	1	1	1	1	1	20
156-60-5	trans-1,2-Dichloroethylene	vapor	1	10000	1	1	1	1.1	1	1	1	1	1	1	20
1582-09-8	Trifluralin	particle-bound	200	10000	3.3	1	5	1.1	40	11	90	1	2000	100	20
1634-04-4	Methyl tert-butyl ether	vapor	1	10000	1	1	1	1.1	1	1	1	1	1	1	20
1836-75-5	Nitrofen	particle-bound	200	3.33333333	3.3	50	5	1.1	40	11	90	1	2000	100	20
189-55-9	Dibenzo[a,i]pyrene	particle-bound	200	3.33333333	3.3	50	5	1.1	40	11	90	1	2000	100	20
189-64-0	Dibenzo[a,h]pyrene	particle-bound	200	3.33333333	3.3	50	5	1.1	40	11	90	1	2000	100	20
191-24-2	Benzo[g,h,i]perylene	particle-bound	200	3.33333333	3.3	50	5	1.1	40	11	90	1	2000	100	20
191-30-0	Benzo[a,l]pyrene	particle-bound	200	3.33333333	3.3	50	5	1.1	40	11	90	1	2000	100	20
192-65-4	Dibenzo[a,e]pyrene	particle-bound	200	3.33333333	3.3	50	5	1.1	40	11	90	1	2000	100	20
193-39-5	Indeno(1,2,3-cd)pyrene	particle	200	3.33333333	3.3	50	5	1.1	40	11	90	1	2000	100	20
205-82-3	Benzo[j]fluoranthene	particle-bound	200	3.33333333	3.3	50	5	1.1	40	11	90	1	2000	100	20
205-99-2	Benzo[b]fluoranthene	particle-bound	200	3.33333333	3.3	50	5	1.1	40	11	90	1	2000	100	20
206-44-0	Fluoranthene	particle-bound	200	3.33333333	3.3	50	5	1.1	40	11	90	1	2000	100	20
207-08-9	Benzo[k]fluoranthene	particle-bound	200	3.33333333	3.3	50	5	1.1	40	11	90	1	2000	100	20
208-96-8	Acenaphthylene	vapor	1	3.33333333	1	50	1	1.1	1	1	1	1	1	1	20
218-01-9	Chrysene	particle-bound	200	3.33333333	3.3	50	5	1.1	40	11	90	1	2000	100	20
2234-13-1	Octachloronaphthalene	particle-bound	200	3.33333333	3.3	50	5	1.1	40	11	90	1	2000	100	20
224-42-0	Dibenz[a,j]acridine	particle-bound	200	3.33333333	3.3	50	5	1.1	40	11	90	1	2000	100	20
226-36-8	Dibenz[a,h]acridine	particle-bound	200	3.33333333	3.3	50	5	1.1	40	11	90	1	2000	100	20
2385-85-5	Mirex	particle-bound	200	3.33333333	3.3	50	5	1.1	40	11	90	1	2000	100	20
25551-13-7	Trimethylbenzene	vapor	1	1000	1	2	1	1.1	1	1	1	1	1	1	20
26140-60-3	Terphenyls	particle-bound	200	3.33333333	3.3	50	5	1.1	40	11	90	1	2000	100	20
27154-33-2	Trichloroflouroethane	vapor	1	1	1	10	1	1.1	1	1	1	1	1	1	20
287-92-3	Cyclopentane	vapor	1	10000	1	1	1	1.1	1	1	1	1	1	1	20
309-00-2	Aldrin	particle-bound	200	3.33333333	3.3	10	5	1.1	40	11	90	1	2000	100	20

Table 11 Summary of Offgas Treatment Equipment DFs for Organic COPCs

CAS Registry Number	Compound	Phase	PT HEME	PT Thermal Oxidizer	PT Caustic Scrubber	PT Carbon Bed Adsorber	PT PJM/RFD Demister	HLW & LAW Melters	HLW & LAW Submerged Bed Scrubber	HLW & LAW WESP	HLW HEME	LAW Caustic Scrubber	All HEPAs (First)	All HEPAs (Second)	HLW & LAW Thermal Catalytic Oxidizer
319-84-6	Hexachlorocyclohexane (Lindane) Alpha BHC	particle-bound	200	3.33333333	3.3	50	5	1.1	40	11	90	1	2000	100	20
319-85-7	Hexachlorocyclohexane (Lindane) Beta BHC	particle-bound	200	3.33333333	3.3	50	5	1.1	40	11	90	1	2000	100	20
319-86-8	Delta-BHC	particle-bound	200	3.33333333	3.3	50	5	1.1	40	11	90	1	2000	100	20
3697-24-3	5-Methylchrysene	particle-bound	200	3.33333333	3.3	50	5	1.1	40	11	90	1	2000	100	20
3825-26-1	Ammonium perfluorooctanoate	particle-bound	200	3.33333333	3.3	50	5	1.1	40	11	90	1	2000	100	20
4170-30-3	2-Butenaldehyde (2-Butenal)	vapor	1	10000	1	1	1	1.1	1	1	1	1	1	1	20
465-73-6	Isodrin	particle-bound	200	3.33333333	3.3	50	5	1.1	40	11	90	1	2000	100	20
50-00-0	Formaldehyde	vapor	1	10000	1	1	1	1.1	1	1	1	1	1	1	20
50-29-3	4,4-DDT	particle-bound	200	3.33333333	3.3	50	5	1.1	40	11	90	1	2000	100	20
50-32-8	Benzo(a)pyrene	particle-bound	200	3.33333333	3.3	50	5	1.1	40	11	90	1	2000	100	20
53-70-3	Dibenzo(a,h)anthracene	particle	200	3.33333333	3.3	50	5	1.1	40	11	90	1	2000	100	20
540-59-0	1,2-Dichloroethylene	vapor	1	10000	1	1	1	1.1	1	1	1	1	1	1	20
540-84-1	2,2,4-Trimethylpentane	vapor	1	10000	1	1	1	1.1	1	1	1	1	1	1	20
541-73-1	1,3-Dichlorobenzene	vapor	1	50	1	2	1	1.1	1	1	1	1	1	1	20
56-23-5	Carbon tetrachloride	vapor	1	1	1	5	1	1.1	1	1	1	1	1	1	20
563-80-4	3-Methyl-2-butanone	vapor	1	10000	1	1	1	1.1	1	1	1	1	1	1	20
56-49-5	3-Methylcholanthrene	particle-bound	200	3.33333333	3.3	50	5	1.1	40	11	90	1	2000	100	20
56-55-3	Benzo(a)anthracene	particle-bound	200	3.33333333	3.3	50	5	1.1	40	11	90	1	2000	100	20
57-14-7	1,1-Dimethylhydrazine	vapor	1	10000	1	1	1	1.1	1	1	1	1	1	1	20
58-89-9	gamma-BHC (Lindane)	particle-bound	200	3.33333333	3.3	50	5	1.1	40	11	90	1	2000	100	20
58-90-2	2,3,4,6-Tetrachlorophenol	vapor	1	3.33333333	1	10	1	1.1	1	1	1	1	1	1	20
591-78-6	2-Hexanone	vapor	1	1000	1	1	1	1.1	1	1	1	1	1	1	20
59-50-7	4-Chloro-3-methylphenol	particle-bound	200	3.33333333	3.3	20	5	1.1	40	11	90	1	2000	100	20
59-89-2	N-Nitrosomorpholine	vapor	1	10000	1	2	1	1.1	1	1	1	1	1	1	20
602-87-9	5-Nitroacenaphthene	vapor	1	3.33333333	1	50	1	1.1	1	1	1	1	1	1	20
60-29-7	Ethyl ether	vapor	1	10000	1	1	1	1.1	1	1	1	1	1	1	20
603-34-9	Triphenylamine	vapor	1	3.33333333	1	50	1	1.1	1	1	1	1	1	1	20
60-34-4	Methylhydrazine	vapor	1	10000	1	1	1	1.1	1	1	1	1	1	1	20
60-35-5	Acetamide	vapor	1	10000	1	2	1	1.1	1	1	1	1	1	1	20
60-57-1	Dieldrin	particle-bound	200	3.33333333	3.3	50	5	1.1	40	11	90	1	2000	100	20
621-64-7	Di-n-Propylnitrosamine	vapor	1	10000	1	2	1	1.1	1	1	1	1	1	1	20
624-83-9	Methyl isocyanate	vapor	1	1000	1	1	1	1.1	1	1	1	1	1	1	20
627-13-4	Nitric acid, propyl ester	vapor	1	10000	1	1	1	1.1	1	1	1	1	1	1	20
62-75-9	N-Nitroso-N,N-dimethylamine	vapor	1	10000	1	1	1	1.1	1	1	1	1	1	1	20
630-20-6	1,1,1,2-Tetrachloroethane	vapor	1	1	1	10	1	1.1	1	1	1	1	1	1	20
64-17-5	Ethyl alcohol	vapor	1	10000	1	1	1	1.1	1	1	1	1	1	1	20
64-18-6	Formic acid	vapor	1	10000	1	2	1	1.1	1	1	1	1	1	1	20
64-19-7	Acetic acid	vapor	1	10000	1	1	1	1.1	1	1	1	1	1	1	20
67-56-1	Methyl alcohol (Methanol)	vapor	1	10000	1	1	1	1.1	1	1	1	1	1	1	20
67-63-0	2-Propyl alcohol (Isopropanol)	vapor	1	10000	1	1	1	1.1	1	1	1	1	1	1	20
67-64-1	2-Propanone (Acetone)	vapor	1	10000	1	1	1	1.1	1	1	1	1	1	1	20
67-66-3	Chloroform	vapor	1	1	1	2	1	1.1	1	1	1	1	1	1	20
67-72-1	Hexachloroethane	vapor	1	1	1	50	1	1.1	1	1	1	1	1	1	20
684-16-2	Hexafluoroacetone	vapor	1	1	1	1	1	1.1	1	1	1	1	1	1	20
71-23-8	n-Propyl alcohol	vapor	1	10000	1	1	1	1.1	1	1	1	1	1	1	20
71-36-3	n-Butyl alcohol	vapor	1	10000	1	1	1	1.1	1	1	1	1	1	1	20
71-43-2	Benzene	vapor	1	100	1	1	1	1.1	1	1	1	1	1	1	20
71-55-6	Methyl chloroform (1,1,1-Trichloroethane)	vapor	1	1000	1	1	1	1.1	1	1	1	1	1	1	20
72-20-8	Endrin	particle-bound	200	3.33333333	3.3	50	5	1.1	40	11	90	1	2000	100	20
72-43-5	Methoxychlor	particle-bound	200	3.33333333	3.3	50	5	1.1	40	11	90	1	2000	100	20
72-54-8	4,4-DDD	particle-bound	200	3.33333333	3.3	50	5	1.1	40	11	90	1	2000	100	20
72-55-9	4,4-DDE	particle-bound	200	3.33333333	3.3	50	5	1.1	40	11	90	1	2000	100	20

Table 11 Summary of Offgas Treatment Equipment DFs for Organic COPCs

CAS Registry Number	Compound	Phase	PT HEME	PT Thermal Oxidizer	PT Caustic Scrubber	PT Carbon Bed Adsorber	PT PJM/RFD Demister	HLW & LAW Melters	HLW & LAW Submerged Bed Scrubber	HLW & LAW WESP	HLW HEME	LAW Caustic Scrubber	All HEPAs (First)	All HEPAs (Second)	HLW & LAW Thermal Catalytic Oxidizer
74-83-9	Bromomethane (Methyl bromide)	vapor	1	1000	1	1	1	1.1	1	1	1	1	1	1	20
74-87-3	Chloromethane (Methyl chloride)	vapor	1	20	1	1	1	1.1	1	1	1	1	1	1	20
74-97-5	Bromochloromethane	vapor	1	1	1	2	1	1.1	1	1	1	1	1	1	20
74-99-7	Methylacetylene	vapor	1	10000	1	1	1	1.1	1	1	1	1	1	1	20
75-00-3	Chloroethane	vapor	1	1000	1	1	1	1.1	1	1	1	1	1	1	20
75-01-4	Vinyl chloride (1-Chloroethene)	vapor	1	10000	1	1	1	1.1	1	1	1	1	1	1	20
75-05-8	Acetonitrile	vapor	1	1000	1	1	1	1.1	1	1	1	1	1	1	20
75-07-0	Acetaldehyde	vapor	1	10000	1	1	1	1.1	1	1	1	1	1	1	20
75-09-2	Dichloromethane (Methylene chloride)	vapor	1	50	1	1	1	1.1	1	1	1	1	1	1	20
75-12-7	Formamide	vapor	1	10000	1	1	1	1.1	1	1	1	1	1	1	20
75-15-0	Carbon disulfide	vapor	1	10000	1	1	1	1.1	1	1	1	1	1	1	20
75-21-8	Ethylene oxide (Oxirane)	vapor	1	10000	1	1	1	1.1	1	1	1	1	1	1	20
75-27-4	Bromodichloromethane	vapor	1	1	1	5	1	1.1	1	1	1	1	1	1	20
75-34-3	1,1-Dichloroethane	vapor	1	10000	1	1	1	1.1	1	1	1	1	1	1	20
75-35-4	1,1-Dichloroethene (Vinylidene chloride)	vapor	1	10000	1	1	1	1.1	1	1	1	1	1	1	20
75-43-4	Dichlorofluoromethane	vapor	1	1000	1	1	1	1.1	1	1	1	1	1	1	20
75-45-6	Chlorodifluoromethane	vapor	1	50	1	1	1	1.1	1	1	1	1	1	1	20
75-50-3	Trimethylamine	vapor	1	10000	1	1	1	1.1	1	1	1	1	1	1	20
75-52-5	Nitromethane	vapor	1	10000	1	1	1	1.1	1	1	1	1	1	1	20
75-55-8	2-Methylaziridine	vapor	1	10000	1	1	1	1.1	1	1	1	1	1	1	20
75-61-6	Dibromodifluoromethane	vapor	1	1	1	1	1	1.1	1	1	1	1	1	1	20
75-63-8	Trifluorobromomethane	vapor	1	1	1	1	1	1.1	1	1	1	1	1	1	20
75-65-0	2-Methyl-2-propanol	vapor	1	10000	1	1	1	1.1	1	1	1	1	1	1	20
75-69-4	Trichlorofluoromethane	vapor	1	1	1	1	1	1.1	1	1	1	1	1	1	20
75-71-8	Dichlorodifluoromethane	vapor	1	1	1	1	1	1.1	1	1	1	1	1	1	20
75-99-0	2,2-Dichloropropionic acid	vapor	1	100	1	2	1	1.1	1	1	1	1	1	1	20
76-03-9	Trichloroacetic acid	vapor	1	1	1	50	1	1.1	1	1	1	1	1	1	20
76-11-9	1,1,1,2-Tetrachloro-2,2-difluoroethane	vapor	1	20	1	5	1	1.1	1	1	1	1	1	1	20
76-12-0	1,1,2,2-Tetrachloro-1,2-difluoroethane	vapor	1	20	1	5	1	1.1	1	1	1	1	1	1	20
76-13-1	1,2,2-Trichloro-1,1,2-trifluoroethane (Freon 113)	vapor	1	20	1	2	1	1.1	1	1	1	1	1	1	20
76-14-2	1,2-Dichloro-1,1,2,2-tetrafluoroethane	vapor	1	1	1	1	1	1.1	1	1	1	1	1	1	20
76-15-3	Chloropentafluoroethane	vapor	1	1	1	1	1	1.1	1	1	1	1	1	1	20
76-44-8	Heptachlor	vapor	1	3.33333333	1	10	1	1.1	1	1	1	1	1	1	20
78-83-1	2-Methylpropyl alcohol (Isobutyl alcohol)	vapor	1	10000	1	1	1	1.1	1	1	1	1	1	1	20
78-87-5	1,2-Dichloropropane	vapor	1	1000	1	1	1	1.1	1	1	1	1	1	1	20
78-92-2	1-Methylpropyl alcohol (2-Butanol)	vapor	1	10000	1	1	1	1.1	1	1	1	1	1	1	20
78-93-3	Methyl ethyl ketone (MEK, 2-Butanone)	vapor	1	1000	1	1	1	1.1	1	1	1	1	1	1	20
79-00-5	1,1,2-Trichloroethane	vapor	1	10000	1	1	1	1.1	1	1	1	1	1	1	20
79-01-6	Trichloroethylene	vapor	1	10000	1	1	1	1.1	1	1	1	1	1	1	20
79-09-4	Propionic acid	vapor	1	10000	1	1	1	1.1	1	1	1	1	1	1	20
79-10-7	2-Propenoic acid	vapor	1	10000	1	1	1	1.1	1	1	1	1	1	1	20
79-20-9	Methyl acetate	vapor	1	10000	1	1	1	1.1	1	1	1	1	1	1	20
79-34-5	1,1,2,2-Tetrachloroethane	vapor	1	1	1	10	1	1.1	1	1	1	1	1	1	20
8001-35-2	Toxaphene	particle-bound	200	3.33333333	3.3	50	5	1.1	40	11	90	1	2000	100	20
82-68-8	Pentachloronitrobenzene (PCBN)	vapor	1	3.33333333	1	50	1	1.1	1	1	1	1	1	1	20
83-32-9	Acenaphthene	vapor	1	3.33333333	1	50	1	1.1	1	1	1	1	1	1	20
84-66-2	Diethyl phthalate	vapor	1	10000	1	5	1	1.1	1	1	1	1	1	1	20
84-74-2	Dibutyl phthalate	particle-bound	200	10000	3.3	5	5	1.1	40	11	90	1	2000	100	20
85-01-8	Phenanthrene	vapor	1	3.33333333	1	50	1	1.1	1	1	1	1	1	1	20
85-68-7	Butylbenzyl phthalate	particle-bound	200	10000	3.3	5	5	1.1	40	11	90	1	2000	100	20
86-73-7	Fluorene	particle-bound	200	3.33333333	3.3	50	5	1.1	40	11	90	1	2000	100	20
87-68-3	Hexachlorobutadiene	vapor	1	50	1	5	1	1.1	1	1	1	1	1	1	20

Table 11 Summary of Offgas Treatment Equipment DFs for Organic COPCs

CAS Registry Number	Compound	Phase	PT HEME	PT Thermal Oxidizer	PT Caustic Scrubber	PT Carbon Bed Adsorber	PT PJM/RFD Demister	HLW & LAW Melters	HLW & LAW Submerged Bed Scrubber	HLW & LAW WESP	HLW HEME	LAW Caustic Scrubber	All HEPAs (First)	All HEPAs (Second)	HLW & LAW Thermal Catalytic Oxidizer
87-86-5	Pentachlorophenol	vapor	1	3.33333333	1	50	1	1.1	1	1	1	1	1	1	20
88-06-2	2,4,6-Trichlorophenol	vapor	1	3.33333333	1	50	1	1.1	1	1	1	1	1	1	20
88-72-2	2-Nitrotoluene	vapor	1	10000	1	2	1	1.1	1	1	1	1	1	1	20
88-75-5	2-Nitrophenol	vapor	1	3.33333333	1	20	1	1.1	1	1	1	1	1	1	20
88-85-7	2-sec-Butyl-4,6-dinitrophenol (Dinoseb)	particle-bound	200	3.33333333	3.3	50	5	1.1	40	11	90	1	2000	100	20
88-89-1	Picric acid	particle-bound	200	10000	3.3	5	5	1.1	40	11	90	1	2000	100	20
91-20-3	Naphthalene	vapor	1	1000	1	2	1	1.1	1	1	1	1	1	1	20
91-22-5	Quinoline	vapor	1	10000	1	2	1	1.1	1	1	1	1	1	1	20
91-58-7	2-Chloronaphthalene	vapor	1	3.33333333	1	50	1	1.1	1	1	1	1	1	1	20
92-52-4	1,1'-Biphenyl	vapor	1	1000	1	5	1	1.1	1	1	1	1	1	1	20
92-93-3	4-Nitrobiphenyl	vapor	1	3.33333333	1	50	1	1.1	1	1	1	1	1	1	20
93-72-1	Silvex (2,4,5-TP)	particle-bound	200	3.33333333	3.3	50	5	1.1	40	11	90	1	2000	100	20
93-76-5	2,4,5-T	particle-bound	200	3.33333333	3.3	50	5	1.1	40	11	90	1	2000	100	20
94-75-7	2,4-D and esters (160C typed)	particle-bound	200	3.33333333	3.3	50	5	1.1	40	11	90	1	2000	100	20
95-13-6	Indene	vapor	1	1000	1	2	1	1.1	1	1	1	1	1	1	20
95-47-6	o-Xylene	vapor	1	10000	1	1	1	1.1	1	1	1	1	1	1	20
95-48-7	o-Cresol (2-Methylphenol)	vapor	1	1000	1	2	1	1.1	1	1	1	1	1	1	20
95-49-8	2-Chlorotoluene	vapor	1	10000	1	2	1	1.1	1	1	1	1	1	1	20
95-50-1	o-Dichlorobenzene (1,2-Dichlorobenzene)	vapor	1	50	1	2	1	1.1	1	1	1	1	1	1	20
95-57-8	2-Chlorophenol	vapor	1	10000	1	2	1	1.1	1	1	1	1	1	1	20
95-95-4	2,4,5-Trichlorophenol	vapor	1	3.33333333	1	50	1	1.1	1	1	1	1	1	1	20
96-22-0	3-Pentanone	vapor	1	10000	1	1	1	1.1	1	1	1	1	1	1	20
96-69-5	Bis(3-tert-butyl-4-hydroxy-6-methyl-phenyl)sulfide	particle-bound	200	3.33333333	3.3	50	5	1.1	40	11	90	1	2000	100	20
98-51-1	p-tert-Butyltoluene	vapor	1	10000	1	2	1	1.1	1	1	1	1	1	1	20
98-82-8	Cumene	vapor	1	10000	1	2	1	1.1	1	1	1	1	1	1	20
98-83-9	alpha-Methylstyrene	vapor	1	100	1	2	1	1.1	1	1	1	1	1	1	20
98-86-2	Acetophenone	vapor	1	100	1	2	1	1.1	1	1	1	1	1	1	20
98-95-3	Nitrobenzene	vapor	1	10000	1	2	1	1.1	1	1	1	1	1	1	20

Table 12 HLW and LAW Vitrification Emissions Analysis Equipment Decontamination Factors

Inorganic Constituents	Melter		SBS		WESP		HLW HEME		LAW/HLW/PJV HEPA (First)		LAW/HLW/PJV HEPA (Second)		Thermal Cat Ox		NOx SCR		HLW AgZ Column		LAW Caustic Scrubber		LAW S-AC Column		HLW S-AC Column	
	DF	Ref	DF	Ref	DF	Ref	DF	Ref	DF	Ref	DF	Ref	DF	Ref	DF	Ref	DF	Ref	DF	Ref	DF	Ref	DF	Ref
Silver	30	(1)	1.8	(2)	30	(2)	100	(2)	2,000	(3)	100	(3)	1	(6)	1	(6)	1	(6)	1	(7)	1	(6)	1	(6)
Aluminum	100	(1)	40	(2)	10	(2)	90	(2)	2,000	(3)	100	(3)	1	(6)	1	(6)	1	(6)	1	(7)	1	(6)	1	(6)
Arsenic	1	(27)	4.8	(2)	30	(2)	100	(2)	2,000	(3)	100	(3)	1	(6)	1	(6)	1	(6)	1	(7)	1	(6)	1	(6)
Boron	30	(1)	30	(2)	10	(2)	90	(2)	2,000	(3)	100	(3)	1	(6)	1	(6)	1	(6)	1	(7)	1	(6)	1	(6)
Barium	100	(1)	90	(2)	11	(2)	90	(2)	2,000	(3)	100	(3)	1	(6)	1	(6)	1	(6)	1	(7)	1	(6)	1	(6)
Bismuth	100	(1)	2.6	(2)	30	(2)	100	(2)	2,000	(3)	100	(3)	1	(6)	1	(6)	1	(6)	1	(7)	1	(6)	1	(6)
Calcium	75	(1)	20	(2)	10	(2)	90	(2)	2,000	(3)	100	(3)	1	(6)	1	(6)	1	(6)	1	(7)	1	(6)	1	(6)
Cadmium	10	(1)	1.6	(2)	80	(2)	110	(2)	2,000	(3)	100	(3)	1	(6)	1	(6)	1	(6)	1	(7)	1	(6)	1	(6)
Chloride	1.9	(1)	30	(2)	10	(2)	90	(2)	2,000	(3)	100	(3)	1	(6)	1	(6)	1	(6)	1	(7)	1	(6)	1	(6)
Chromium (hexavalent)	100	(1)	3.4	(2)	12	(2)	90	(2)	2,000	(3)	100	(3)	1	(6)	1	(6)	1	(6)	1	(7)	1	(6)	1	(6)
Copper	300	(1)	2.9	(2)	30	(2)	100	(2)	2,000	(3)	100	(3)	1	(6)	1	(6)	1	(6)	1	(7)	1	(6)	1	(6)
Fluoride	4	(1)	30	(2)	10	(2)	90	(2)	2,000	(3)	100	(3)	1	(6)	1	(6)	1	(6)	1	(7)	1	(6)	1	(6)
Iron	200	(1)	40	(2)	10	(2)	90	(2)	2,000	(3)	100	(3)	1	(6)	1	(6)	1	(6)	1	(7)	1	(6)	1	(6)
Mercury	1	(1)	6	(14)	1	(14)	3.5	(14)	1	(14)	1	(14)	1	(14)	1	(14)	1	(14)	1	(14)	20	(15)	1000	(15)
Potassium	20	(1)	1.7	(2)	60	(2)	100	(2)	2,000	(3)	100	(3)	1	(6)	1	(6)	1	(6)	1	(7)	1	(6)	1	(6)
Lithium	100	(1)	2.1	(2)	40	(2)	100	(2)	2,000	(3)	100	(3)	1	(6)	1	(6)	1	(6)	1	(7)	1	(6)	1	(6)
Magnesium	200	(1)	20	(2)	10	(2)	90	(2)	2,000	(3)	100	(3)	1	(6)	1	(6)	1	(6)	1	(7)	1	(6)	1	(6)
Manganese	75	(1)	30	(2)	10	(2)	90	(2)	2,000	(3)	100	(3)	1	(6)	1	(6)	1	(6)	1	(7)	1	(6)	1	(6)
Sodium	100	(1)	2.6	(2)	30	(2)	100	(2)	2,000	(3)	100	(3)	1	(6)	1	(6)	1	(6)	1	(7)	1	(6)	1	(6)
Nickel	89	(1)	5.9	(2)	20	(2)	90	(2)	2,000	(3)	100	(3)	1	(6)	1	(6)	1	(6)	1	(7)	1	(6)	1	(6)
Nitrite	1	(1)	30	(24)	10	(24)	90	(24)	2,000	(3)	100	(3)	1	(6)	1	(6)	1	(6)	1	(7)	1	(6)	1	(6)
Nitrate	1	(1)	30	(24)	10	(24)	90	(24)	2,000	(3)	100	(3)	1	(6)	1	(6)	1	(6)	1	(7)	1	(6)	1	(6)
Hydroxide	1	(1)	30	(24)	10	(24)	90	(24)	2,000	(3)	100	(3)	1	(6)	1	(6)	1	(6)	1	(7)	1	(6)	1	(6)
Phosphorus	40	(1)	30	(24)	10	(24)	90	(24)	2,000	(3)	100	(3)	1	(6)	1	(6)	1	(6)	1	(7)	1	(6)	1	(6)
Lead	200	(1)	2.3	(2)	30	(2)	100	(2)	2,000	(3)	100	(3)	1	(6)	1	(6)	1	(6)	1	(7)	1	(6)	1	(6)
Phosphate	40	(1)	30	(24)	10	(24)	90	(24)	2,000	(3)	100	(3)	1	(6)	1	(6)	1	(6)	1	(7)	1	(6)	1	(6)
Total Sulfur	2.7	(1)	30	(24)	10	(24)	90	(24)	2,000	(3)	100	(3)	1	(6)	1	(6)	1	(6)	1	(7)	1	(6)	1	(6)
Silicon	300	(1)	30	(2)	10	(2)	90	(2)	2,000	(3)	100	(3)	1	(6)	1	(6)	1	(6)	1	(7)	1	(6)	1	(6)
Sulfate	2.7	(1)	30	(24)	10	(24)	90	(24)	2,000	(3)	100	(3)	1	(6)	1	(6)	1	(6)	1	(7)	1	(6)	1	(6)
Strontium (total)	100	(1)	40	(2)	10	(2)	90	(2)	2,000	(3)	100	(3)	1	(6)	1	(6)	1	(6)	1	(7)	1	(6)	1	(6)
Zinc	100	(1)	70	(2)	11	(2)	90	(2)	2,000	(3)	100	(3)	1	(6)	1	(6)	1	(6)	1	(7)	1	(6)	1	(6)
Zirconium	300	(1)	30	(2)	10	(2)	90	(2)	2,000	(3)	100	(3)	1	(6)	1	(6)	1	(6)	1	(7)	1	(6)	1	(6)
Beryllium	300	(28)	30	(28)	10	(28)	90	(28)	2,000	(28)	100	(28)	1	(28)	1	(28)	1	(28)	1	(28)	1	(28)	1	(28)
Cyanide	40	(28)	30	(28)	10	(28)	90	(28)	2,000	(28)	100	(28)	1	(28)	1	(28)	1	(28)	1	(28)	1	(28)	1	(28)
Cobalt	200	(28)	3	(28)	20	(28)	100	(28)	2,000	(28)	100	(28)	1	(28)	1	(28)	1	(28)	1	(28)	1	(28)	1	(28)
Molybdenum	100	(28)	3	(28)	30	(28)	100	(28)	2,000	(28)	100	(28)	1	(28)	1	(28)	1	(28)	1	(28)	1	(28)	1	(28)
Rhodium	300	(28)	30	(28)	10	(28)	90	(28)	2,000	(28)	100	(28)	1	(28)	1	(28)	1	(28)	1	(28)	1	(28)	1	(28)
Antimony	100	(28)	4	(28)	11	(28)	90	(28)	2,000	(28)	100	(28)	1	(28)	1	(28)	1	(28)	1	(28)	1	(28)	1	(28)
Selenium	4	(28)	30	(28)	10	(28)	90	(28)	2,000	(28)	100	(28)	1	(28)	1	(28)	1	(28)	1	(28)	1	(28)	1	(28)
Tin	200	(28)	40	(28)	10	(28)	90	(28)	2,000	(28)	100	(28)	1	(28)	1	(28)	1	(28)	1	(28)	1	(28)	1	(28)
Tantalum	300	(28)	30	(28)	10	(28)	90	(28)	2,000	(28)	100	(28)	1	(28)	1	(28)	1	(28)	1	(28)	1	(28)	1	(28)
Thallium	4	(28)	30	(28)	10	(28)	90	(28)	2,000	(28)	100	(28)	1	(28)	1	(28)	1	(28)	1	(28)	1	(28)	1	(28)
Uranium	200	(28)	40	(28)	10	(28)	90	(28)	2,000	(28)	100	(28)	1	(28)	1	(28)	1	(28)	1	(28)	1	(28)	1	(28)
Vanadium	100	(28)	3	(28)	30	(28)	100	(28)	2,000	(28)	100	(28)	1	(28)	1	(28)	1	(28)	1	(28)	1	(28)	1	(28)
Tungsten	300	(28)	30	(28)	10	(28)	90	(28)	2,000	(28)	100	(28)	1	(28)	1	(28)	1	(28)	1	(28)	1	(28)	1	(28)
Yttrium	100	(28)	40	(28)	10	(28)	90	(28)	2,000	(28)	100	(28)	1	(28)	1	(28)	1	(28)	1	(28)	1	(28)	1	(28)
Carbon monoxide	1	(26)	1	(27)	1	(27)	1	(27)	1	(3)	1	(3)	20	(19)	1	(20)	1	(20)	1	(20)	1	(20)	1	(20)
Carbon Dioxide	1	(26)	1	(21)	1	(21)	1	(21)	1	(3)	1	(3)	1	(20)	1	(20)	1	(20)	1	(10)	1	(20)	1	(20)
Nitric Oxide	1	(26)	1.0	(17)	1.0	(17)	1.0	(17)	1	(3)	1	(3)	1	(20)	20	(16)	1	(20)	1.2	(9)	1	(20)	1	(20)
Nitrogen Dioxide	1	(26)	1.0	(17)	1.0	(17)	1.0	(17)	1	(3)	1	(3)	1	(20)	20	(16)	1	(20)	1.2	(9)	1	(20)	1	(20)
Hydrochloric Acid	1	(26)	1.0	(17)	1.3	(17)	1.0	(17)	1	(3)	1	(3)	1	(20)	1	(20)	1000	(20)	25	(9)	1	(20)	1	(20)
Hydrofluoric Acid	1	(26)	2.0	(17)	2.0	(17)	2.0	(17)	1	(3)	1	(3)	1	(20)	1	(20)	1000	(20)	15	(9)	1	(20)	1	(20)
Sulfur dioxide	1	(26)	1.0	(17)	1.0	(17)	1.0	(17)	1	(3)	1	(3)	1.2	(19)	1	(20)	1	(20)	10	(9)	1	(20)	1	(20)

Table 12 HLW and LAW Vitrification Emissions Analysis Equipment Decontamination Factors

Ammonia/Ammonium	1	(24)	4.0	(17)	1.1	(17)	1.1	(17)	1	(3)	1	(3)	1	(20)	1	(20)	1	(20)	1	(9)	1	(23)	1	(20)
Radionuclide Constituents	Melter		SBS		WESP		HLW HEME		LAW/HLW/PJV HEPA (First)		LAW/HLW/PJV HEPA (Second)		Thermal Cat Ox		NOx SCR		HLW AgZ Column		LAW Caustic Scrubber		LAW S-AC Column		HLW S-AC Column	
	DF	Ref	DF	Ref	DF	Ref	DF	Ref	DF	Ref	DF	Ref	DF	Ref	DF	Ref	DF	Ref	DF	Ref	DF	Ref	DF	Ref
Americium-241	200	(1)	40	(2)	10	(2)	90	(2)	2,000	(3)	100	(3)	1	(6)	1	(6)	1	(6)	1	(7)	1	(6)	1	(6)
Carbon-14	1	(3)	1	(5)	1	(5)	1	(5)	1	(5)	1	(5)	1	(5)	1	(5)	1	(5)	1	(10)	1	(5)	1	(5)
Cobalt-60	200	(1)	3.2	(2)	20	(2)	100	(2)	2,000	(3)	100	(3)	1	(6)	1	(6)	1	(6)	1	(7)	1	(6)	1	(6)
Curium-243	200	(1)	40	(2)	10	(2)	90	(2)	2,000	(3)	100	(3)	1	(6)	1	(6)	1	(6)	1	(7)	1	(6)	1	(6)
Curium-244	200	(1)	40	(2)	10	(2)	90	(2)	2,000	(3)	100	(3)	1	(6)	1	(6)	1	(6)	1	(7)	1	(6)	1	(6)
Cesium-137	30	(1)	2.4	(2)	30	(2)	100	(2)	2,000	(3)	100	(3)	1	(6)	1	(6)	1	(6)	1	(7)	1	(6)	1	(6)
Europium-152	200	(1)	40	(2)	10	(2)	90	(2)	2,000	(3)	100	(3)	1	(6)	1	(6)	1	(6)	1	(7)	1	(6)	1	(6)
Europium-154	200	(1)	40	(2)	10	(2)	90	(2)	2,000	(3)	100	(3)	1	(6)	1	(6)	1	(6)	1	(7)	1	(6)	1	(6)
Europium-155	200	(1)	40	(2)	10	(2)	90	(2)	2,000	(3)	100	(3)	1	(6)	1	(6)	1	(6)	1	(7)	1	(6)	1	(6)
Tritium	3	(4)	N/A	(4)	N/A	(4)	N/A	(4)	1	(4)	1	(4)	1	(4)	1	(4)	1	(4)	N/A	(4)	1	(4)	1	(4)
Iodine-129	1.1	(18)	1.2	(18)	1	(18)	1	(18)	1	(18)	1	(18)	1	(18)	1	(18)	1000	(8)	100	(9)	1	(18)	1	(18)
Nickel-63	89	(1)	5.9	(2)	20	(2)	90	(2)	2,000	(3)	100	(3)	1	(6)	1	(6)	1	(6)	1	(7)	1	(6)	1	(6)
Neptunium-237	200	(1)	40	(2)	10	(2)	90	(2)	2,000	(3)	100	(3)	1	(6)	1	(6)	1	(6)	1	(7)	1	(6)	1	(6)
Plutonium-238	200	(1)	40	(2)	10	(2)	90	(2)	2,000	(3)	100	(3)	1	(6)	1	(6)	1	(6)	1	(7)	1	(6)	1	(6)
Plutonium-239	200	(1)	40	(2)	10	(2)	90	(2)	2,000	(3)	100	(3)	1	(6)	1	(6)	1	(6)	1	(7)	1	(6)	1	(6)
Plutonium-240	200	(1)	40	(2)	10	(2)	90	(2)	2,000	(3)	100	(3)	1	(6)	1	(6)	1	(6)	1	(7)	1	(6)	1	(6)
Plutonium-241	200	(1)	40	(2)	10	(2)	90	(2)	2,000	(3)	100	(3)	1	(6)	1	(6)	1	(6)	1	(7)	1	(6)	1	(6)
Antimony-125	100	(1)	3.7	(2)	11	(2)	90	(2)	2,000	(3)	100	(3)	1	(6)	1	(6)	1	(6)	1	(7)	1	(6)	1	(6)
Samarium-151	200	(1)	40	(2)	11	(2)	90	(2)	2,000	(3)	100	(3)	1	(6)	1	(6)	1	(6)	1	(7)	1	(6)	1	(6)
Tin-126	200	(1)	40	(2)	10	(2)	90	(2)	2,000	(3)	100	(3)	1	(6)	1	(6)	1	(6)	1	(7)	1	(6)	1	(6)
Strontium-90	100	(1)	40	(2)	10	(2)	90	(2)	2,000	(3)	100	(3)	1	(6)	1	(6)	1	(6)	1	(7)	1	(6)	1	(6)
Technetium-99	3	(1)	3.9	(2)	30	(2)	100	(2)	2,000	(3)	100	(3)	1	(6)	1	(6)	1	(6)	1	(7)	1	(6)	1	(6)
Thorium-232	200	(1)	40	(2)	10	(2)	90	(2)	2,000	(3)	100	(3)	1	(6)	1	(6)	1	(6)	1	(7)	1	(6)	1	(6)
Uranium-233	200	(1)	40	(2)	10	(2)	90	(2)	2,000	(3)	100	(3)	1	(6)	1	(6)	1	(6)	1	(7)	1	(6)	1	(6)
Uranium-234	200	(1)	40	(2)	10	(2)	90	(2)	2,000	(3)	100	(3)	1	(6)	1	(6)	1	(6)	1	(7)	1	(6)	1	(6)
Uranium-235	200	(1)	40	(2)	10	(2)	90	(2)	2,000	(3)	100	(3)	1	(6)	1	(6)	1	(6)	1	(7)	1	(6)	1	(6)
Uranium-236	200	(1)	40	(2)	10	(2)	90	(2)	2,000	(3)	100	(3)	1	(6)	1	(6)	1	(6)	1	(7)	1	(6)	1	(6)
Uranium-238	200	(1)	40	(2)	10	(2)	90	(2)	2,000	(3)	100	(3)	1	(6)	1	(6)	1	(6)	1	(7)	1	(6)	1	(6)
Yttrium-90	100	(1)	40	(2)	10	(2)	90	(2)	2,000	(3)	100	(3)	1	(6)	1	(6)	1	(6)	1	(7)	1	(6)	1	(6)
Ruthenium-106	4	(28)	30	(28)	10	(28)	90	(28)	2,000	(28)	100	(28)	1	(28)	1	(28)	1	(28)	1	(28)	1	(28)	1	(28)
Cesium-134	30	(28)	2.4	(28)	30	(28)	100	(28)	2,000	(28)	100	(28)	1	(28)	1	(28)	1	(28)	1	(28)	1	(28)	1	(28)
Barium-137m	30	(28)	2.4	(28)	30	(28)	100	(28)	2,000	(28)	100	(28)	1	(28)	1	(28)	1	(28)	1	(28)	1	(28)	1	(28)
Plutonium-242	200	(28)	40	(28)	10	(28)	90	(28)	2,000	(28)	100	(28)	1	(28)	1	(28)	1	(28)	1	(28)	1	(28)	1	(28)
Radium-226	300	(28)	30	(28)	10	(28)	90	(28)	2,000	(28)	100	(28)	1	(28)	1	(28)	1	(28)	1	(28)	1	(28)	1	(28)
Uranium-232	200	(28)	40	(28)	10	(28)	90	(28)	2,000	(28)	100	(28)	1	(28)	1	(28)	1	(28)	1	(28)	1	(28)	1	(28)
Protactinium-231	300	(28)	30	(28)	10	(28)	90	(28)	2,000	(28)	100	(28)	1	(28)	1	(28)	1	(28)	1	(28)	1	(28)	1	(28)
Nickel-59	89	(28)	6	(28)	20	(28)	90	(28)	2,000	(28)	100	(28)	1	(28)	1	(28)	1	(28)	1	(28)	1	(28)	1	(28)
Actinium-227	300	(28)	30	(28)	10	(28)	90	(28)	2,000	(28)	100	(28)	1	(28)	1	(28)	1	(28)	1	(28)	1	(28)	1	(28)
Americium-243	200	(28)	40	(28)	10	(28)	90	(28)	2,000	(28)	100	(28)	1	(28)	1	(28)	1	(28)	1	(28)	1	(28)	1	(28)
Radium-228	300	(28)	30	(28)	10	(28)	90	(28)	2,000	(28)	100	(28)	1	(28)	1	(28)	1	(28)	1	(28)	1	(28)	1	(28)
Curium-242	200	(28)	40	(28)	10	(28)	90	(28)	2,000	(28)	100	(28)	1	(28)	1	(28)	1	(28)	1	(28)	1	(28)	1	(28)
Thorium-229	200	(28)	40	(28)	10	(28)	90	(28)	2,000	(28)	100	(28)	1	(28)	1	(28)	1	(28)	1	(28)	1	(28)	1	(28)
Zirconium-93	300	(28)	30	(28)	10	(28)	90	(28)	2,000	(28)	100	(28)	1	(28)	1	(28)	1	(28)	1	(28)	1	(28)	1	(28)
Niobium-93m	300	(28)	30	(28)	10	(28)	90	(28)	2,000	(28)	100	(28)	1	(28)	1	(28)	1	(28)	1	(28)	1	(28)	1	(28)
Cadmium-113m	10	(28)	2	(28)	80	(28)	110	(28)	2,000	(28)	100	(28)	1	(28)	1	(28)	1	(28)	1	(28)	1	(28)	1	(28)
Selenium-79	4	(28)	30	(28)	10	(28)	90	(28)	2,000	(28)	100	(28)	1	(28)	1	(28)	1	(28)	1	(28)	1	(28)	1	(28)
Organic Constituents	-	-	-	-	-	-	-	-	-	-	-	-	-	-	-	-	-	-	-	-	-	-	-	-
Non-Volatile	1	(25)	20	(24)	20	(24)	90	(24)	2000	(3)	100	(3)	20	(11)	1	(6)	1	(6)	1	(7)	1	(6)	1	(6)
SVOC	1.1	(13)	1	(12)	1	(12)	1	(12)	1	(12)	1	(12)	20	(11)	1	(12)	1	(12)	1	(12)	1	(12)	1	(12)
VOC	1.1	(13)	1	(12)	1	(12)	1	(12)	1	(12)	1	(12)	20	(11)	1	(12)	1	(12)	1	(12)	1	(12)	1	(12)

Notes: Table 12

The following notes correspond to Table 12, HLW and LAW Vitrification Emissions Analysis Equipment Decontamination Factors, and provide the bases for vitrification melter and offgas decontamination factors for the facility emissions report

1. Based on Table B.3, Calculation 24590-HLW-MKC-HOP-00001, Rev. 0 (NOTE: Cesium-137 and technicium-99 melter DFs are based on experimental data. However, no reduction in melter capture has been assumed relating to cesium/technetium interactions.)
2. Based on Table D.1, Calculation 24590-WTP-MKC-50-00004, Rev. 0. (NOTE: Offgas particulate DFs are based on experimental data assuming certain elemental speciation. However, emissions modeling assumes all elements are in their base forms, primarily as oxides.)
3. Based on the BARCT analysis, 24590-WTP-RPT-ENV-01-004, Rev. 1
4. It is assumed that Tritium (H-3) will have the same decontamination factor (DF) as water in the respective process unit. No reduction in capture efficiency has been incorporated. If the unit is operated under evaporative conditions, a DF of 1 is defined.
5. It is assumed that Carbon-14 will have the same DF as carbon dioxide in the respective process unit. No reduction in capture efficiency has been incorporated.
6. No particulate removal efficiency is assumed.
7. Based on the information provided in Table D.1, Calculation 24590-WTP-MKC-50-00004, Rev. 0, the LAW Caustic Scrubber is assumed to have a particulate scrubbing efficiency DF of 1.
8. Based on Section 7.13, Calculation 24590-HLW-MKC-HOP-00002, Rev. B., no reduction in efficiency is recommended since the silver mordenite's efficiency will effectively be infinite until breakthrough is approached.
9. Because of the inherent uncertainties in predicting scrubbing efficiencies in packed bed columns, the DFs defined in Table 4 of Calculation 24590-LAW-MKC-LVP-00002 have been divided by two (2), except for iodine. Per E&NS management direction, the full 99% abatement efficiency (DF=100) for iodine (including I-129) is to be used for emissions modeling.
10. Although the LAW caustic scrubber may have a small collection efficiency (<10%) for carbon dioxide, it is assumed to be 0% (DF=1). Since the unit has not been designed as an abatement technology for carbon dioxide (i.e., Carbon-14), the unit will be operated to minimize carbon dioxide capture in order to minimize solids sent to the Hanford Effluent Treatment Facility. Therefore, no capture of carbon dioxide (i.e., Carbon-14) removal can be assumed.
11. Per the VSL report *Off-Line Tests of the DM-1200 Thermal Catalytic Oxidation (TCO) Unit* (VSL-02R8200-1), the TCO can achieve a DRE of >99% if the offgas residence time exceeds 0.4 seconds. If the residence time drops to 0.15 seconds a DRE of ~95% would be expected. No difference in efficiency was observed between SVOCs and VOCs. Preliminary TCO information (based on early vendor contacts) provided residence times between 0.05 and 0.1 seconds. There is also concern that the TCO units will lose efficiency over time due to poisoning. Therefore, a VOC/SVOC DRE of 90% was initially recommended for the facility emissions report. However, per E&NS management direction, a 95% organic DRE abatement efficiency is to be used for emissions modeling.
12. Per Tables 6.11 and 6.9, of VSL reports *Integrated Off-Gas System Tests on the DM-1200 Melter with RPP-WTP LAW Sub-Envelope A1 Simulants* (VSL-02R8800-2) and *Integrated Off-Gas System Tests on the DM-1200 Melter with RPP-WTP LAW Sub-Envelope C1 Simulants* (VSL-02R8800-1), respectively, the observed offgas system DRE is basically the same as the DRE measured on the TCO. Therefore, a DRE of 0% (DF=1) on the remaining offgas system is defined.
13. Per the same VSL report tables defined in #12, the DM-1200 melter organic DRE ranged from 0% to 33% for Envelope A and 42% to 57% for Envelope C. Because of the observed inefficient destruction efficiency in the DM-1200 melter, a combined VOC/SVOC DRE of 10% (DF=1.1) for both the HLW and LAW melters is recommended.
14. Mercury DFs for the SBS, WESP, HLW HEME, and LAW caustic scrubber are per the *Mercury Pathway and Treatment Assessment for the WTP* (24590-WTP-RPT-PR-01-011). These DFs have not been reduced so as to not limit the amount of mercury that could potentially leach to the LAW system.
15. The design basis mercury DFs for the HLW and LAW S-AC columns are 1000, and 20, respectively, per calculation 24590-WTP-M4C-HOP-00001. No reduction in efficiency is recommended since the unit's efficiency will effectively be infinite until breakthrough is approached. Use of the full design abatement efficiency was also recommended by E&NS management.

Notes: Table 12

16. Per the VSL reports defined in #12, the DM-1200 SCR unit initially experienced very poor NO_x destruction efficiencies of ~40%. With the use of a different catalyst media, the NOx efficiency was raised well above the 90% design specification. The SCR unit at the LAW Pilot Melter at Duratek has recorded very high NOx destruction efficiencies exceeding 99%. However, the Duratek SCR operates with an excessive ammonia slip. The SCR at VSL has also had to operate at a high ammonia slip in order to compensate for NO_x concentration fluctuations caused by the pulsating melter feed. Therefore, if the ammonia injection to the SCRs will be controlled to minimize ammonia slip, a 90% (DF=10) destruction efficiency was originally recommended. If the SCR units can be operated at a high ammonia slip, higher NO_x destruction efficiencies are achievable. Taking this into account, E&NS management has directed that a NO_x abatement efficiency of 95% be used for both HLW and LAW emissions modeling. Therefore, the average permitting contingency for NO_x in the LAW system will be approximately a factor of "2" (50 MT/day*20%Na Loading / 30 MT/day*17%Na Loading).

17. After a review of the *Integrated Off-Gas System Tests on the DM-1200 Melter with RPP-WTP LAW Sub-Envelope A1 Simulants* (VSL-02R8800-2), *Integrated Off-Gas System Tests on the DM-1200 Melter with RPP-WTP LAW Sub-Envelope C1 Simulants* (VSL-02R8800-1), and *Tests on the DuraMelter 1200 HLW Pilot Melter System Using AZ-101 HLW Simulants*, (VSL-02R0100-2), the identified acid gas decontamination factors are recommended for the SBS, WESP, and HEME. In general, it was observed that the SBS, WESP, and HEME are very poor gas scrubbers for most acid gas species. This would be expected because of the limited gas/liquid contact time and because the units are simply not design to be very efficient at gas scrubbing. (NOTE: The identified VSL reports discuss significant analytical errors when trying to calculate unit acid gas DFs. This may be rectified in the future, allowing for better estimation of acid gas DFs. However, the identified DFs are deemed bounding for the emissions estimate.)

18. Per Table 6.8 of VSL reports *Integrated Off-Gas System Tests on the DM-1200 Melter with RPP-WTP LAW Sub-Envelope A1 Simulants* (VSL-02R8800-2), the melter and offgas system capture efficiencies for iodine were found to be ~20% and ~40%, respectively. Therefore, the recommended iodine capture efficiencies for the emissions report are 10% (DF=1.1) and 20% (DF=1.2) for the melter and offgas system, respectively. For simplicity, the offgas system iodine DF will be exclusively applied to the SBS.

19. The thermal catalytic oxidizer is known to oxidize both carbon monoxide (CO) and sulfur dioxide (SO_2) to carbon dioxide (CO_2) and sulfur trioxide (SO_3), respectively. Per contacts with catalyst vendors, the oxidation efficiency of carbon monoxide tends to be higher then the realized organic destruction efficiency, while the oxidation of sulfur dioxide tends to be less. However, to be conservative, the carbon monoxide conversion DF in the TCO emissions will be assumed to be equal to the organic DF DRE. For SO_2, the vendor recommended an oxidization efficiency of 20% (DF=1.2).

20. No Gas Scrubbing Efficiency is assumed.

21. Since the VSL analysis shows that the SBS/WESP/HEME condensate will be mildly acidic to neutral, no scrubbing efficiency (DF=1) for carbon dioxide is assumed.

22. Per Table A-13 of calculation 24590-HLW-MKC-HOP-00001, arsenic (As) decontamination factors in the DM-1000 melter were measured between 200 and 700. This was based on AZ-101 simulant feed during stable melter operations. This is the only known arsenic melter DF data known to exist. Based on this information and the precedent set of dividing minimal observed DFs by 2, a melter DF of 100 is recommended for arsenic. This is a change from the previous recommendation of 1 (based on arsenic volatility) before the DM-1000 information was obtained.

23. It is assumed that no ammonia (DF=1) will be removed in the LAW caustic scrubber because of the alkaline conditions.

24. Miscellaneous anion species and nonvolatile organics are defined with the average cation DF due to the various speciation potentials.

25. Non-Volatile organics in the melter feed are assumed to have no glass solubility and completely decompose to carbon dioxide, carbon monoxide, and PICs so that these decomposition products are maximized at the stack discharge.

26. Gas species are assumed to have no solubility in glass and therefore have no retention in the melter.

27. These gas species are assumed to have no retention in the identified offgas units because of their high stability and/or volatility.

28. DFs are based on the representative compound.

Table 13 Summary of Organic Constituents Emission Rates for the WTP

CAS #	COPC	Feed	Unabated Streams					Abated Streams				
		FRP14	PVP01	PJV04	LMP06	HMP06	PJV32	PVP12	PJV31	LVP26	HOP33	PJV34
		WTP Feed	PT Vessel Vent	PT RFD/PJM	LAW Melter	HLW Melter	HLW PJM/RFD	PT Vessel Vent	PT RFD/PJM	LAW Melter	HLW Melter	HLW PJM/RFD
		g/sec	g/sec	g/sec	g/sec	g/sec	g/sec	g/sec	g/sec	g/sec	g/sec	g/sec
100-00-5	p-Nitrochlorobenzene	3.49E-02	2.32E-03	1.42E-06	2.55E-04	5.03E-03	3.82E-12	4.65E-08	1.42E-06	1.27E-05	2.52E-04	3.82E-12
100-21-0	p-Phthalic acid	3.49E-02	3.05E-08	2.90E-06	2.48E-02	6.81E-03	7.49E-13	3.05E-11	2.90E-06	1.24E-03	3.41E-04	7.49E-13
100-25-4	1,4-Dinitrobenzene	3.49E-02	2.15E-05	2.82E-06	2.28E-02	6.86E-03	7.54E-13	3.25E-18	2.82E-12	1.29E-11	4.34E-14	3.77E-18
100-41-4	Ethyl benzene	7.67E-03	7.69E-03	7.78E-08	0.00E+00	1.17E-12	3.90E-22	7.69E-07	7.78E-08	0.00E+00	1.89E-13	3.90E-22
100-42-5	Styrene	7.67E-03	7.70E-03	7.92E-08	0.00E+00	3.39E-10	5.85E-20	7.70E-07	7.92E-08	0.00E+00	2.75E-11	5.85E-20
10061-01-5	cis-1,3-Dichloropropene	7.67E-03	7.72E-03	8.06E-08	0.00E+00	9.78E-10	1.66E-19	7.72E-05	8.06E-08	0.00E+00	7.83E-11	1.66E-19
10061-02-6	trans-1,3-Dichloropropene	7.67E-03	7.66E-03	8.33E-08	0.00E+00	1.88E-08	2.66E-18	1.53E-04	8.33E-08	0.00E+00	1.24E-09	2.66E-18
101-55-3	4-Bromophenylphenyl ether	3.49E-02	2.41E-02	6.48E-07	1.03E-07	3.50E-04	3.94E-14	1.45E-04	6.48E-07	5.13E-09	1.80E-05	3.94E-14
101-84-8	Diphenyl ether	7.67E-03	7.19E-03	9.69E-08	7.45E-13	2.99E-06	3.51E-16	2.87E-05	9.69E-08	3.73E-14	1.61E-07	3.51E-16
106-35-4	3-Heptanone	7.67E-03	5.31E-03	1.43E-07	2.26E-08	7.71E-05	8.67E-15	5.31E-07	1.43E-07	1.13E-09	3.95E-06	8.67E-15
106-42-3	p-Xylene (Dimethyl benzene)	7.67E-03	7.70E-03	7.92E-08	0.00E+00	3.39E-10	5.85E-20	7.70E-06	7.92E-08	0.00E+00	2.75E-11	5.85E-20
106-46-7	1,4-Dichlorobenzene	7.67E-03	7.86E-03	8.43E-08	0.00E+00	8.79E-09	1.30E-18	7.86E-05	8.43E-08	0.00E+00	6.05E-10	1.30E-18
106-88-7	1,2-Epoxybutane	7.67E-03	6.54E-03	1.17E-07	1.14E-09	1.74E-05	1.99E-15	6.54E-07	1.17E-07	5.68E-11	9.10E-07	1.99E-15
106-93-4	Ethylene dibromide (Dibromethane)	3.49E-02	3.41E-02	4.10E-07	1.02E-11	1.87E-06	2.33E-16	3.41E-03	4.10E-07	5.08E-13	1.07E-07	2.33E-16
106-97-8	Butane	7.67E-03	7.71E-03	7.71E-08	0.00E+00	0.00E+00	0.00E+00	7.71E-07	7.71E-08	0.00E+00	0.00E+00	0.00E+00
106-99-0	1,3-Butadiene	7.67E-03	7.71E-03	7.72E-08	0.00E+00	0.00E+00	2.11E-26	7.71E-07	7.72E-08	0.00E+00	0.00E+00	2.11E-26
107-02-8	Acrolein	7.67E-03	5.31E-03	1.43E-07	2.26E-08	7.71E-05	8.67E-15	5.31E-07	1.43E-07	1.13E-09	3.95E-06	8.67E-15
107-05-1	3-Chloropropene (Allyl chloride)	7.67E-03	7.69E-03	7.78E-08	0.00E+00	1.17E-12	3.90E-22	7.69E-07	7.78E-08	0.00E+00	1.89E-13	3.90E-22
107-06-2	1,2-Dichloroethane (Ethylene chloride)	7.67E-03	7.66E-03	8.33E-08	0.00E+00	1.88E-08	2.66E-18	7.66E-07	8.33E-08	0.00E+00	1.24E-09	2.66E-18
107-12-0	Propionitrile	7.67E-03	3.05E-03	1.86E-07	4.05E-07	3.23E-04	3.59E-14	3.05E-07	1.86E-07	2.02E-08	1.63E-05	3.59E-14
107-13-1	Acrylonitrile	7.67E-03	5.31E-03	1.43E-07	2.26E-08	7.71E-05	8.67E-15	5.31E-07	1.43E-07	1.13E-09	3.95E-06	8.67E-15
107-18-6	2-Propene-1-ol	3.49E-02	2.32E-03	1.42E-06	2.55E-04	5.03E-03	3.82E-12	2.32E-07	1.42E-06	1.27E-05	2.52E-04	3.82E-12
107-31-3	Formic acid, methyl ester	3.49E-02	2.97E-02	5.30E-07	5.16E-09	7.90E-05	9.06E-15	2.97E-06	5.30E-07	2.58E-10	4.14E-06	9.06E-15
107-66-4	Dibutylphosphate	3.49E-02	9.95E-06	2.88E-06	2.40E-02	6.86E-03	7.55E-13	7.54E-18	2.88E-12	1.36E-11	4.34E-14	3.77E-18
107-87-9	2-Pentanone	7.67E-03	5.31E-03	1.43E-07	2.26E-08	7.71E-05	8.67E-15	5.31E-07	1.43E-07	1.13E-09	3.95E-06	8.67E-15
108-03-2	1-Nitropropane	3.49E-02	2.41E-02	6.48E-07	1.03E-07	3.50E-04	3.94E-14	2.41E-06	6.48E-07	5.13E-09	1.80E-05	3.94E-14
108-05-4	Vinyl acetate	3.49E-02	3.27E-02	4.40E-07	3.39E-12	1.36E-05	1.60E-15	3.27E-06	4.40E-07	1.69E-13	7.31E-07	1.60E-15
108-10-1	Hexone (4-Methyl-2-pentanone or MIBK)	7.67E-03	5.31E-03	1.43E-07	2.26E-08	7.71E-05	8.67E-15	5.31E-07	1.43E-07	1.13E-09	3.95E-06	8.67E-15
108-20-3	Bis(isopropyl)ether	7.67E-03	7.86E-03	8.43E-08	0.00E+00	8.79E-09	1.30E-18	7.86E-07	8.43E-08	0.00E+00	6.05E-10	1.30E-18
108-38-3	m-Xylene (Dimethyl benzene)	7.67E-03	7.70E-03	7.92E-08	0.00E+00	3.39E-10	5.85E-20	7.70E-06	7.92E-08	0.00E+00	2.75E-11	5.85E-20
108-39-4	m-Cresol	7.67E-03	2.09E-04	3.20E-07	2.59E-04	1.16E-03	1.28E-13	1.04E-07	3.20E-07	1.30E-05	5.82E-05	1.28E-13
108-87-2	Methylcyclohexane	7.67E-03	7.68E-03	7.69E-08	0.00E+00	0.00E+00	0.00E+00	7.68E-07	7.69E-08	0.00E+00	0.00E+00	0.00E+00
108-88-3	Toluene	7.67E-03	7.70E-03	7.84E-08	0.00E+00	1.06E-11	2.73E-21	7.70E-07	7.84E-08	0.00E+00	1.31E-12	2.73E-21
108-90-7	Chlorobenzene	7.67E-03	7.70E-03	7.92E-08	0.00E+00	3.39E-10	5.85E-20	7.70E-05	7.92E-08	0.00E+00	2.75E-11	5.85E-20
108-93-0	Cyclohexanol	7.67E-03	5.11E-04	3.13E-07	5.60E-05	1.11E-03	8.41E-13	2.56E-08	3.13E-07	2.80E-06	5.54E-05	8.41E-13
108-94-1	Cyclohexanone	7.67E-03	8.63E-04	2.39E-07	1.17E-05	7.96E-04	8.78E-14	4.32E-08	2.39E-07	5.87E-07	3.99E-05	8.78E-14
108-95-2	Phenol	3.49E-02	2.41E-04	2.21E-06	9.42E-03	6.71E-03	7.39E-13	1.21E-06	2.21E-06	4.71E-04	3.36E-04	7.39E-13
109-66-0	n-Pentane	7.67E-03	7.71E-03	7.71E-08	0.00E+00	0.00E+00	0.00E+00	7.71E-07	7.71E-08	0.00E+00	0.00E+00	0.00E+00
109-99-9	Tetrahydrofuran	1.63E-02	6.47E-03	3.95E-07	8.58E-07	6.86E-04	7.61E-14	6.47E-07	3.95E-07	4.29E-08	3.46E-05	7.61E-14
110-12-3	5-Methyl-2-hexanone	7.67E-03	6.54E-03	1.17E-07	1.14E-09	1.74E-05	1.99E-15	6.54E-07	1.17E-07	5.68E-11	9.10E-07	1.99E-15
110-43-0	2-Heptanone	7.67E-03	6.54E-03	1.17E-07	1.14E-09	1.74E-05	1.99E-15	6.54E-07	1.17E-07	5.68E-11	9.10E-07	1.99E-15
110-54-3	n-Hexane	7.67E-03	7.70E-03	7.70E-08	0.00E+00	0.00E+00	0.00E+00	7.70E-07	7.70E-08	0.00E+00	0.00E+00	0.00E+00

Table 13 Summary of Organic Constituents Emission Rates for the WTP

CAS #	COPC	Feed	Unabated Streams					Abated Streams				
		FRP14	PVP01	PJV04	LMP06	HMP06	PJV32	PVP12	PJV11	LVP26	HOP33	PJV34
		WTP Feed	PT Vessel Vent	PT RFD/PJM	LAW Melter	HLW Melter	HLW PJM/RFD	PT Vessel Vent	PT RFD/PJM	LAW Melter	HLW Melter	HLW PJM/RFD
		g/sec	g/sec	g/sec	g/sec	g/sec	g/sec	g/sec	g/sec	g/sec	g/sec	g/sec
110-62-3	n-Valeraldehyde	3.49E-02	2.97E-02	5.30E-07	5.16E-09	7.90E-05	9.06E-15	2.97E-06	5.30E-07	2.58E-10	4.14E-06	9.06E-15
110-82-7	Cyclohexane	7.67E-03	7.69E-03	7.70E-08	0.00E+00	0.00E+00	1.24E-34	7.69E-07	7.70E-08	0.00E+00	0.00E+00	1.24E-34
110-83-8	Cyclohexene	7.67E-03	7.73E-03	7.76E-08	0.00E+00	1.83E-20	2.75E-24	7.73E-07	7.76E-08	0.00E+00	6.47E-21	2.75E-24
110-86-1	Pyridine	3.49E-02	3.92E-03	1.09E-06	5.33E-05	3.62E-03	3.99E-13	3.92E-07	1.09E-06	2.67E-06	1.81E-04	3.99E-13
111-65-9	n-Octane	7.67E-03	7.71E-03	7.71E-08	0.00E+00	0.00E+00	0.00E+00	7.71E-07	7.71E-08	0.00E+00	0.00E+00	0.00E+00
111-76-2	Ethylene glycol monobutyl ether	3.49E-02	9.48E-04	1.45E-06	1.18E-03	5.29E-03	5.82E-13	4.74E-08	1.45E-06	5.89E-05	2.65E-04	5.82E-13
111-84-2	n-Nonane	7.67E-03	7.71E-03	7.71E-08	0.00E+00	0.00E+00	0.00E+00	3.86E-07	7.71E-08	0.00E+00	0.00E+00	0.00E+00
117-81-7	Bis(2-ethylhexyl)phthalate (DEHP)	3.49E-02	3.67E-04	2.78E-06	9.49E-03	8.50E-03	1.13E-11	5.57E-17	2.78E-12	5.39E-12	6.07E-14	5.64E-17
117-84-0	n-Dioctyl phthalate	3.49E-02	2.52E-03	1.42E-06	1.84E-04	4.97E-03	4.89E-12	3.81E-16	1.42E-12	1.05E-13	7.01E-14	2.45E-17
118-74-1	Hexachlorobenzene	7.21E-04	7.39E-04	7.92E-09	0.00E+00	8.26E-10	1.22E-19	4.43E-06	7.92E-09	0.00E+00	5.68E-11	1.22E-19
120-12-7	Anthracene	3.49E-02	1.62E-02	8.01E-07	8.55E-07	1.11E-03	1.23E-13	3.25E-06	8.01E-07	4.27E-08	5.62E-05	1.23E-13
120-82-1	1,2,4-Trichlorobenzene	7.67E-03	7.66E-03	8.33E-08	0.00E+00	1.88E-08	2.66E-18	1.53E-05	8.33E-08	0.00E+00	1.24E-09	2.66E-18
120-83-2	2,4-Dichlorophenol	3.49E-02	2.32E-03	1.42E-06	2.55E-04	5.03E-03	3.82E-12	1.39E-05	1.42E-06	1.27E-05	2.52E-04	3.82E-12
121-44-8	Triethylamine	7.67E-03	6.54E-03	1.17E-07	1.14E-09	1.74E-05	1.99E-15	6.54E-07	1.17E-07	5.68E-11	9.10E-07	1.99E-15
121-69-7	Dimethylaniline	7.67E-03	3.05E-03	1.86E-07	4.05E-07	3.23E-04	3.59E-14	1.53E-07	1.86E-07	2.02E-08	1.63E-05	3.59E-14
122-39-4	N,N-Diphenylamine	7.67E-03	3.51E-04	2.82E-07	8.77E-05	1.03E-03	1.14E-13	1.41E-06	2.82E-07	4.39E-06	5.17E-05	1.14E-13
123-19-3	4-Heptanone	7.67E-03	3.05E-03	1.86E-07	4.05E-07	3.23E-04	3.59E-14	3.05E-07	1.86E-07	2.02E-08	1.63E-05	3.59E-14
123-38-6	n-Propionaldehyde	7.67E-03	5.31E-03	1.43E-07	2.26E-08	7.71E-05	8.67E-15	5.31E-07	1.43E-07	1.13E-09	3.95E-06	8.67E-15
123-51-3	3-Methyl-1-butanol	7.67E-03	1.08E-03	2.31E-07	6.90E-06	7.28E-04	8.02E-14	1.08E-07	2.31E-07	3.45E-07	3.65E-05	8.02E-14
123-86-4	Acetic acid n-butyl ester	3.49E-02	3.27E-02	4.40E-07	3.39E-12	1.36E-05	1.60E-15	3.27E-06	4.40E-07	1.69E-13	7.31E-07	1.60E-15
123-91-1	1,4-Dioxane	2.09E-02	1.39E-03	8.54E-07	1.53E-04	3.02E-03	2.29E-12	1.39E-07	8.54E-07	7.64E-06	1.51E-04	2.29E-12
126-73-8	Tributyl phosphate	3.49E-02	1.20E-04	2.52E-06	1.52E-02	6.90E-03	7.59E-13	2.41E-09	2.52E-06	7.60E-04	3.45E-04	7.59E-13
126-98-7	2-Methyl-2-propenenitrile (Methacrylonitrile)	7.67E-03	7.19E-03	9.69E-08	7.45E-13	2.99E-06	3.51E-16	7.19E-07	9.69E-08	3.73E-14	1.61E-07	3.51E-16
127-18-4	Perchloroethylene (tetrachloroethylene)	7.67E-03	7.72E-03	7.77E-08	0.00E+00	4.81E-14	2.48E-23	7.72E-04	7.77E-08	0.00E+00	1.19E-14	2.48E-23
127-19-5	N,N-Dimethylacetamide	7.67E-03	2.19E-06	6.33E-07	5.28E-03	1.51E-03	1.66E-13	1.09E-10	6.33E-07	2.64E-04	7.55E-05	1.66E-13
128-37-0	2,6-Bis(tert-butyl)-4-methylphenol	3.49E-02	2.52E-03	1.42E-06	1.84E-04	4.97E-03	4.89E-12	5.03E-08	1.42E-06	9.20E-06	2.49E-04	4.89E-12
129-00-0	Pyrene	3.49E-02	5.32E-03	1.41E-06	4.53E-05	4.37E-03	5.85E-12	2.42E-13	1.41E-12	2.58E-14	1.24E-13	2.92E-17
1321-64-8	Pentachloronaphthalene	3.49E-02	2.41E-02	6.48E-07	1.03E-07	3.50E-04	3.94E-14	1.10E-12	6.48E-13	5.82E-17	2.67E-14	1.97E-19
1321-65-9	Trichloronaphthalene	3.49E-02	2.97E-02	5.30E-07	5.16E-09	7.90E-05	9.06E-15	1.78E-04	5.30E-07	2.58E-10	4.14E-06	9.06E-15
132-64-9	Dibenzofuran	3.49E-02	2.97E-02	5.30E-07	5.16E-09	7.90E-05	9.06E-15	1.78E-04	5.30E-07	2.58E-10	4.14E-06	9.06E-15
1335-87-1	Hexachloronaphthalene	3.49E-02	2.41E-02	6.48E-07	1.03E-07	3.50E-04	3.94E-14	1.10E-12	6.48E-13	5.82E-17	2.67E-14	1.97E-19
1335-88-2	Tetrachloronaphthalene	3.49E-02	2.97E-02	5.30E-07	5.16E-09	7.90E-05	9.06E-15	1.35E-12	5.30E-13	2.93E-18	1.09E-14	4.53E-20
1336-36-3	Polychlorinated biphenyls (PCBs)	1.21E-02	5.79E-02	1.32E-06	5.42E-11	6.62E-05	1.14E-13	2.63E-12	1.32E-12	3.08E-20	5.41E-14	5.68E-19
141-78-6	Acetic acid ethyl ester (Ethyl acetate)	3.49E-02	2.41E-02	6.48E-07	1.03E-07	3.50E-04	3.94E-14	2.41E-06	6.48E-07	5.13E-09	1.80E-05	3.94E-14
141-79-7	4-Methyl-3-penten-2-one	3.49E-02	1.39E-02	8.47E-07	1.84E-06	1.47E-03	1.63E-13	1.39E-06	8.47E-07	9.20E-08	7.42E-05	1.63E-13
142-82-5	n-Heptane	7.67E-03	7.70E-03	7.70E-08	0.00E+00	0.00E+00	0.00E+00	7.70E-07	7.70E-08	0.00E+00	0.00E+00	0.00E+00
144-62-7	Oxalic acid	3.49E-03	1.58E-08	2.90E-07	2.48E-03	6.83E-04	7.51E-14	7.91E-11	2.90E-07	1.24E-04	3.41E-05	7.51E-14
156-60-5	trans-1,2-Dichloroethylene	7.67E-03	7.69E-03	7.78E-08	0.00E+00	1.17E-12	3.90E-22	7.69E-07	7.78E-08	0.00E+00	1.89E-13	3.90E-22
1582-09-8	Trifluralin	3.49E-02	2.41E-02	6.48E-07	1.03E-07	3.50E-04	3.94E-14	1.83E-14	6.48E-13	5.82E-17	2.67E-14	1.97E-19
1634-04-4	Methyl tert-butyl ether	7.67E-03	7.19E-03	9.69E-08	7.45E-13	2.99E-06	3.51E-16	7.19E-07	9.69E-08	3.73E-14	1.61E-07	3.51E-16
1836-75-5	Nitrofen	3.49E-02	3.67E-04	2.78E-06	9.49E-03	8.50E-03	1.13E-11	1.67E-14	2.78E-12	5.39E-12	6.07E-14	5.64E-17
189-55-9	Dibenzo[a,i]pyrene	3.49E-02	9.95E-06	2.88E-06	2.40E-02	6.86E-03	7.55E-13	4.52E-16	2.88E-12	1.36E-11	4.34E-14	3.77E-18

Table 13 Summary of Organic Constituents Emission Rates for the WTP

CAS #	COPC	Feed	Unabated Streams					Abated Streams				
		FRP14	PVP01	PJV04	LMP06	HMP06	PJV32	PVP12	PJV11	LVP26	HOP33	PJV34
		WTP Feed	PT Vessel Vent	PT RFD/PJM	LAW Melter	HLW Melter	HLW PJM/RFD	PT Vessel Vent	PT RFD/PJM	LAW Melter	HLW Melter	HLW PJM/RFD
		g/sec	g/sec	g/sec	g/sec	g/sec	g/sec	g/sec	g/sec	g/sec	g/sec	g/sec
189-64-0	Dibenzo[a,h]pyrene	3.49E-02	9.95E-06	2.88E-06	2.40E-02	6.86E-03	7.55E-13	4.52E-16	2.88E-12	1.36E-11	4.34E-14	3.77E-18
191-24-2	Benzo(g,h,i)perylene	3.49E-02	3.67E-04	2.78E-06	9.49E-03	8.50E-03	1.13E-11	1.67E-14	2.78E-12	5.39E-12	6.07E-14	5.64E-17
191-30-0	Benzo[a,i]pyrene	3.49E-02	9.95E-06	2.88E-06	2.40E-02	6.86E-03	7.55E-13	4.52E-16	2.88E-12	1.36E-11	4.34E-14	3.77E-18
192-65-4	Dibenzo[a,c]pyrene	3.49E-02	9.95E-06	2.88E-06	2.40E-02	6.86E-03	7.55E-13	4.52E-16	2.88E-12	1.36E-11	4.34E-14	3.77E-18
193-39-5	Indeno(1,2,3-cd)pyrene	3.49E-02	3.67E-04	2.78E-06	9.49E-03	8.50E-03	1.13E-11	1.67E-14	2.78E-12	5.39E-12	6.07E-14	5.64E-17
205-82-3	Benzo(j)fluoranthene	3.49E-02	1.20E-04	2.52E-06	1.52E-02	6.90E-03	7.59E-13	5.47E-15	2.52E-12	8.64E-12	4.42E-14	3.80E-18
205-99-2	Benzo(b)fluoranthene	3.49E-02	3.67E-04	2.78E-06	9.49E-03	8.50E-03	1.13E-11	1.67E-14	2.78E-12	5.39E-12	6.07E-14	5.64E-17
206-44-0	Fluoranthene	3.49E-02	5.04E-03	1.45E-06	4.07E-05	4.58E-03	6.11E-12	2.29E-13	1.45E-12	2.31E-14	1.21E-13	3.06E-17
207-08-9	Benzo(k)fluoranthene	3.49E-02	3.67E-04	2.78E-06	9.49E-03	8.50E-03	1.13E-11	1.67E-14	2.78E-12	5.39E-12	6.07E-14	5.64E-17
208-96-8	Acenaphthylene	3.49E-02	2.41E-02	6.48E-07	1.03E-07	3.50E-04	3.94E-14	1.45E-04	6.48E-07	5.13E-09	1.80E-05	3.94E-14
218-01-9	Chrysene	3.49E-02	2.55E-03	1.51E-06	2.40E-04	5.26E-03	7.00E-12	1.16E-13	1.51E-12	1.36E-13	8.40E-14	3.50E-17
2234-13-1	Octachloronaphthalene	3.49E-02	2.41E-02	6.48E-07	1.03E-07	3.50E-04	3.94E-14	1.10E-12	6.48E-13	5.82E-17	2.67E-14	1.97E-19
224-42-0	Dibenz[a,j]acridine	3.49E-02	1.27E-06	2.89E-06	2.47E-02	6.80E-03	7.48E-13	5.78E-17	2.89E-12	1.40E-11	4.30E-14	3.74E-18
226-36-8	Dibenz[a,h]acridine	3.49E-02	1.27E-06	2.89E-06	2.47E-02	6.80E-03	7.48E-13	5.78E-17	2.89E-12	1.40E-11	4.30E-14	3.74E-18
2385-85-5	Mirex	3.49E-02	3.48E-02	3.79E-07	0.00E+00	8.55E-08	1.21E-17	2.09E-04	3.79E-07	0.00E+00	5.62E-09	1.21E-17
2551-13-7	Trimethyl benzene	7.67E-03	7.70E-03	7.92E-08	0.00E+00	3.39E-10	5.85E-20	3.85E-06	7.92E-08	0.00E+00	2.75E-11	5.85E-20
26140-60-3	Terphenyls	3.49E-02	1.70E-02	1.39E-06	9.55E-07	2.45E-03	3.34E-12	7.73E-13	1.39E-12	5.42E-16	2.15E-13	1.67E-17
27154-33-2	Trichlorofluoroethane	7.67E-03	7.71E-03	7.72E-08	0.00E+00	0.00E+00	2.11E-26	7.71E-04	7.72E-08	0.00E+00	0.00E+00	2.11E-26
287-92-3	Cyclopentane	7.67E-03	7.69E-03	7.70E-08	0.00E+00	0.00E+00	1.24E-34	7.69E-07	7.70E-08	0.00E+00	0.00E+00	1.24E-34
309-00-2	Aldrin	4.30E-04	2.10E-04	1.72E-08	1.18E-08	3.02E-05	4.12E-14	4.77E-14	1.72E-14	6.69E-18	2.66E-15	2.06E-19
319-84-6	Hexachlorocyclohexane (Lindane) Alpha BHC	1.16E-04	1.68E-05	4.83E-09	1.36E-07	1.53E-05	2.04E-14	1.01E-07	4.83E-09	6.79E-09	7.68E-07	2.04E-14
319-85-7	Hexachlorocyclohexane (Lindane) Beta BHC	1.16E-04	1.22E-06	9.38E-09	3.11E-05	2.86E-05	3.80E-14	5.55E-17	9.38E-15	1.77E-14	2.04E-16	1.90E-19
319-86-8	Delta-BHC	1.16E-04	1.22E-06	9.25E-09	3.16E-05	2.83E-05	3.76E-14	5.57E-17	9.25E-15	1.80E-14	2.02E-16	1.88E-19
3697-24-3	5-Methylchrysene	3.49E-02	2.52E-03	1.42E-06	1.84E-04	4.97E-03	4.89E-12	1.14E-13	1.42E-12	1.05E-13	7.01E-14	2.45E-17
3825-26-1	Ammonium perfluorooctanoate	3.49E-02	2.41E-02	6.48E-07	1.03E-07	3.50E-04	3.94E-14	1.10E-12	6.48E-13	5.82E-17	2.67E-14	1.97E-19
4170-30-3	2-Butenaldehyde (2-Butenal or Crotonaldehyde)	7.67E-03	8.70E-04	2.39E-07	1.16E-05	7.96E-04	8.77E-14	8.70E-08	2.39E-07	5.80E-07	3.99E-05	8.77E-14
465-73-6	Isodrin	2.32E-04	1.12E-03	2.57E-08	1.05E-12	1.29E-06	2.20E-15	6.74E-06	2.57E-08	5.25E-14	8.30E-08	2.20E-15
50-00-0	Formaldehyde	7.67E-03	7.67E-05	5.38E-07	2.46E-03	1.67E-03	1.05E-12	7.67E-09	5.38E-07	1.23E-04	8.34E-05	1.05E-12
50-29-3	4,4-DDT	2.32E-04	3.36E-05	9.67E-09	2.72E-07	3.05E-05	4.08E-14	1.53E-15	9.67E-15	1.54E-16	8.08E-16	2.04E-19
50-32-8	Benzo(a)pyrene	4.42E-04	4.67E-06	3.47E-08	1.22E-04	1.07E-04	1.41E-13	2.12E-16	3.47E-14	6.95E-14	7.62E-16	7.07E-19
53-70-3	Dibenzo(a,h)anthracene	5.81E-05	2.01E-07	4.19E-09	2.53E-05	1.15E-05	1.27E-15	9.12E-18	4.19E-15	1.44E-14	7.37E-17	6.33E-21
540-59-0	1,2-Dichloroethylene	7.67E-03	7.70E-03	7.92E-08	0.00E+00	3.39E-10	5.85E-20	7.70E-07	7.92E-08	0.00E+00	2.75E-11	5.85E-20
540-84-1	2,2,4-Trimethylpentane	7.67E-03	7.71E-03	7.71E-08	0.00E+00	0.00E+00	0.00E+00	7.71E-07	7.71E-08	0.00E+00	0.00E+00	0.00E+00
541-73-1	1,3-Dichlorobenzene	7.67E-03	7.70E-03	7.92E-08	0.00E+00	3.39E-10	5.85E-20	7.70E-05	7.92E-08	0.00E+00	2.75E-11	5.85E-20
56-23-5	Carbon tetrachloride	7.67E-03	7.73E-03	7.76E-08	0.00E+00	1.83E-20	2.75E-24	1.55E-03	7.76E-08	0.00E+00	6.47E-21	2.75E-24
563-80-4	3-Methyl-2-butanone	7.67E-03	5.31E-03	1.43E-07	2.26E-08	7.71E-05	8.67E-15	5.31E-07	1.43E-07	1.13E-09	3.95E-06	8.67E-15
56-49-5	3-Methylcholanthrene	3.49E-02	3.51E-02	3.51E-07	0.00E+00	0.00E+00	0.00E+00	1.59E-12	3.51E-13	0.00E+00	0.00E+00	0.00E+00
56-55-3	Benzo(a)anthracene	3.49E-02	5.04E-03	1.45E-06	4.07E-05	4.58E-03	6.11E-12	2.29E-13	1.45E-12	2.31E-14	1.21E-13	3.06E-17
57-14-7	1,1-Dimethylhydrazine	3.49E-02	4.90E-03	1.05E-06	3.14E-05	3.31E-03	3.65E-13	4.90E-07	1.05E-06	1.57E-06	1.66E-04	3.65E-13
58-89-9	gamma-BHC (Lindane)	1.16E-04	8.74E-06	5.22E-09	4.92E-07	1.81E-05	2.41E-14	3.97E-16	5.22E-15	2.79E-16	2.86E-16	1.20E-19
58-90-2	2,3,4,6-Tetrachlorophenol	3.49E-02	3.64E-03	1.10E-06	6.24E-05	3.71E-03	4.09E-13	1.09E-04	1.10E-06	3.12E-06	1.86E-04	4.09E-13
591-78-6	2-Hexanone	7.67E-03	5.31E-03	1.43E-07	2.26E-08	7.71E-05	8.67E-15	5.31E-06	1.43E-07	1.13E-09	3.95E-06	8.67E-15

Table 13 Summary of Organic Constituents Emission Rates for the WTP

CAS #	COPC	Feed	Unabated Streams					Abated Streams				
		FRP14	PVP01	PJV04	LMP06	HMP06	PJV32	PVP12	PJV11	LVP26	HOP33	PJV34
		WTP Feed	PT Vessel Vent	PT RFD/PJM	LAW Melter	HLW Melter	HLW PJM/RFD	PT Vessel Vent	PT RFD/PJM	LAW Melter	HLW Melter	HLW PJM/RFD
		g/sec	g/sec	g/sec	g/sec	g/sec	g/sec	g/sec	g/sec	g/sec	g/sec	g/sec
59-50-7	4-Chloro-3-methylphenol	3.49E-02	2.52E-03	1.42E-06	1.84E-04	4.97E-03	4.89E-12	2.86E-13	1.42E-12	1.05E-13	7.01E-14	2.45E-17
59-89-2	N-Nitrosomorpholine	3.49E-02	2.15E-05	2.82E-06	2.28E-02	6.86E-03	7.54E-13	8.13E-18	2.82E-06	1.14E-03	3.43E-04	7.54E-13
602-87-9	5-Nitroacenaphthene	3.49E-02	9.48E-04	1.45E-06	1.18E-03	5.29E-03	5.82E-13	4.31E-14	1.45E-12	6.69E-13	3.93E-14	2.91E-18
60-29-7	Ethyl ether	3.49E-02	3.48E-02	3.79E-07	0.00E+00	8.55E-08	1.21E-17	3.48E-06	3.79E-07	0.00E+00	5.62E-09	1.21E-17
603-34-9	Triphenylamine	3.49E-02	2.37E-03	1.18E-06	1.65E-04	4.22E-03	4.65E-13	1.42E-05	1.18E-06	8.23E-06	2.11E-04	4.65E-13
60-34-4	Methylhydrazine	7.67E-03	5.11E-04	3.13E-07	5.60E-05	1.11E-03	8.41E-13	5.11E-08	3.13E-07	2.80E-06	5.54E-05	8.41E-13
60-35-5	Acetamide	7.67E-03	2.19E-06	6.33E-07	5.28E-03	1.51E-03	1.66E-13	1.09E-10	6.33E-07	2.64E-04	7.55E-05	1.66E-13
60-57-1	Dieldrin	2.32E-04	3.18E-05	9.95E-09	2.41E-07	3.19E-05	4.26E-14	1.44E-15	9.95E-15	1.37E-16	7.88E-16	2.13E-19
621-64-7	Di-n-Propylnitrosamine (N-Nitroso-di-n-propylamine)	3.49E-02	2.32E-03	1.42E-06	2.55E-04	5.03E-03	3.82E-12	1.16E-07	1.42E-06	1.27E-05	2.52E-04	3.82E-12
624-83-9	Methyl isocyanate	7.67E-03	7.66E-03	8.33E-08	0.00E+00	1.88E-08	2.66E-18	7.66E-06	8.33E-08	0.00E+00	1.24E-09	2.66E-18
627-13-4	Nitric acid, propyl ester	3.49E-02	3.48E-02	3.79E-07	0.00E+00	8.55E-08	1.21E-17	3.48E-06	3.79E-07	0.00E+00	5.62E-09	1.21E-17
62-75-9	N-Nitroso-N,N-dimethylamine (Dimethylnitrosamine)	6.51E-02	1.77E-03	2.71E-06	2.20E-03	9.87E-03	1.09E-12	8.85E-08	2.71E-06	1.10E-04	4.94E-04	1.09E-12
630-20-6	1,1,1,2-Tetrachloroethane	7.67E-03	7.86E-03	8.43E-08	0.00E+00	8.79E-09	1.30E-18	7.86E-04	8.43E-08	0.00E+00	6.05E-10	1.30E-18
64-17-5	Ethyl alcohol	7.67E-03	5.11E-04	3.13E-07	5.60E-05	1.11E-03	8.41E-13	5.11E-08	3.13E-07	2.80E-06	5.54E-05	8.41E-13
64-18-6	Formic acid	3.49E-02	1.20E-04	2.52E-06	1.52E-02	6.90E-03	7.59E-13	1.20E-08	2.52E-06	7.60E-04	3.45E-04	7.59E-13
64-19-7	Acetic acid	3.49E-02	2.15E-05	2.82E-06	2.28E-02	6.86E-03	7.54E-13	2.15E-09	2.82E-06	1.14E-03	3.43E-04	7.54E-13
67-56-1	Methyl alcohol (Methanol)	7.67E-03	5.11E-04	3.13E-07	5.60E-05	1.11E-03	8.41E-13	5.11E-08	3.13E-07	2.80E-06	5.54E-05	8.41E-13
67-63-0	2-Propyl alcohol (Isopropanol; Propan-2-01)	7.67E-03	8.63E-04	2.39E-07	1.17E-05	7.96E-04	8.78E-14	8.63E-08	2.39E-07	5.87E-07	3.99E-05	8.78E-14
67-64-1	2-Propanone (Acetone)	4.18E-02	1.66E-02	1.02E-06	2.21E-06	1.76E-03	1.96E-13	1.66E-06	1.02E-06	1.10E-07	8.91E-05	1.96E-13
67-66-3	Chloroform	7.67E-03	7.70E-03	7.92E-08	0.00E+00	3.39E-10	5.85E-20	3.85E-03	7.92E-08	0.00E+00	2.75E-11	5.85E-20
67-72-1	Hexachloroethane	3.49E-02	3.50E-02	3.60E-07	0.00E+00	1.54E-09	2.66E-19	7.00E-04	3.60E-07	0.00E+00	1.25E-10	2.66E-19
684-16-2	Hexafluoroacetone	7.67E-03	7.70E-03	7.92E-08	0.00E+00	3.39E-10	5.85E-20	7.70E-03	7.92E-08	0.00E+00	2.75E-11	5.85E-20
71-23-8	n-Propyl alcohol	7.67E-03	8.63E-04	2.39E-07	1.17E-05	7.96E-04	8.78E-14	8.63E-08	2.39E-07	5.87E-07	3.99E-05	8.78E-14
71-36-3	n-Butyl alcohol	7.67E-03	8.63E-04	2.39E-07	1.17E-05	7.96E-04	8.78E-14	8.63E-08	2.39E-07	5.87E-07	3.99E-05	8.78E-14
71-43-2	Benzene	7.67E-03	7.69E-03	7.85E-08	0.00E+00	2.73E-11	6.36E-21	7.69E-05	7.85E-08	0.00E+00	3.04E-12	6.36E-21
71-55-6	Methyl chloroform (1,1,1-Trichloroethane)	7.67E-03	7.72E-03	7.77E-08	0.00E+00	4.81E-14	2.48E-23	7.72E-06	7.77E-08	0.00E+00	1.19E-14	2.48E-23
72-20-8	Endrin	2.32E-04	1.68E-05	9.45E-09	1.23E-06	3.31E-05	3.26E-14	7.62E-16	9.45E-15	6.97E-16	4.68E-16	1.63E-19
72-43-5	Methoxychlor	1.16E-03	4.01E-06	8.39E-08	5.07E-04	2.30E-04	2.53E-14	1.82E-16	8.39E-14	2.88E-13	1.47E-15	1.27E-19
72-54-8	4,4-DDD	2.32E-04	1.68E-05	9.45E-09	1.23E-06	3.31E-05	3.26E-14	7.62E-16	9.45E-15	6.97E-16	4.68E-16	1.63E-19
72-55-9	4,4-DDE	2.32E-04	1.13E-04	9.28E-09	6.36E-09	1.63E-05	2.23E-14	5.15E-15	9.28E-15	3.62E-18	1.44E-15	1.11E-19
74-83-9	Bromomethane (Methyl bromide)	7.67E-03	7.70E-03	7.92E-08	0.00E+00	3.39E-10	5.85E-20	7.70E-06	7.92E-08	0.00E+00	2.75E-11	5.85E-20
74-87-3	Chloromethane (Methyl chloride)	7.67E-03	7.69E-03	7.78E-08	0.00E+00	1.17E-12	3.90E-22	3.85E-04	7.78E-08	0.00E+00	1.89E-13	3.90E-22
74-97-5	Bromochloromethane	7.67E-03	7.66E-03	8.33E-08	0.00E+00	1.88E-08	2.66E-18	3.83E-03	8.33E-08	0.00E+00	1.24E-09	2.66E-18
74-99-7	Methylacetylene	3.49E-02	3.50E-02	3.54E-07	0.00E+00	5.34E-12	1.77E-21	3.50E-06	3.54E-07	0.00E+00	8.57E-13	1.77E-21
75-00-3	Chloroethane	7.67E-03	7.69E-03	7.78E-08	0.00E+00	1.17E-12	3.90E-22	7.69E-06	7.78E-08	0.00E+00	1.89E-13	3.90E-22
75-01-4	Vinyl chloride (1-Chloroethene)	3.49E-02	3.51E-02	3.53E-07	0.00E+00	8.32E-20	1.25E-23	3.51E-06	3.53E-07	0.00E+00	2.94E-20	1.25E-23
75-05-8	Acetonitrile	1.09E-02	3.60E-03	2.80E-07	8.85E-07	5.74E-04	6.35E-14	3.60E-06	2.80E-07	4.42E-08	2.89E-05	6.35E-14
75-07-0	Acetaldehyde	3.49E-02	1.39E-02	8.47E-07	1.84E-06	1.47E-03	1.63E-13	1.39E-06	8.47E-07	9.20E-08	7.42E-05	1.63E-13
75-09-2	Dichloromethane (Methylene chloride)	7.67E-03	7.70E-03	7.92E-08	0.00E+00	3.39E-10	5.85E-20	3.85E-04	7.92E-08	0.00E+00	2.75E-11	5.85E-20
75-12-7	Formamide	3.49E-02	1.27E-06	2.89E-06	2.47E-02	6.80E-03	7.48E-13	1.27E-10	2.89E-06	1.24E-03	3.40E-04	7.48E-13
75-15-0	Carbon disulfide	7.67E-03	7.69E-03	7.78E-08	0.00E+00	1.17E-12	3.90E-22	7.69E-07	7.78E-08	0.00E+00	1.89E-13	3.90E-22
75-21-8	Ethylene oxide (Oxirane)	7.67E-03	6.54E-03	1.17E-07	1.14E-09	1.74E-05	1.99E-15	6.54E-07	1.17E-07	5.68E-11	9.10E-07	1.99E-15

Table 13 Summary of Organic Constituents Emission Rates for the WTP

CAS #	COPC	Feed	Unabated Streams					Abated Streams				
		FRP14	PVP01	PJV04	LMP06	HMP06	PJV32	PVP12	PJV11	LVP26	HOP33	PJV34
		WTP Feed	PT Vessel Vent	PT RFD/PJM	LAW Melter	HLW Melter	HLW PJM/RFD	PT Vessel Vent	PT RFD/PJM	LAW Melter	HLW Melter	HLW PJM/RFD
		g/sec	g/sec	g/sec	g/sec	g/sec	g/sec	g/sec	g/sec	g/sec	g/sec	g/sec
75-27-4	Bromodichloromethane	7.67E-03	7.86E-03	8.43E-08	0.00E+00	8.79E-09	1.30E-18	1.57E-03	8.43E-08	0.00E+00	6.05E-10	1.30E-18
75-34-3	1,1-Dichloroethane	7.67E-03	7.70E-03	7.92E-08	0.00E+00	3.39E-10	5.85E-20	7.70E-07	7.92E-08	0.00E+00	2.75E-11	5.85E-20
75-35-4	1,1-Dichloroethene (Vinylidene chloride)	7.67E-03	7.73E-03	7.76E-08	0.00E+00	1.83E-20	2.75E-24	7.73E-07	7.76E-08	0.00E+00	6.47E-21	2.75E-24
75-43-4	Dichlorofluoromethane	7.67E-03	7.69E-03	7.78E-08	0.00E+00	1.17E-12	3.90E-22	7.69E-06	7.78E-08	0.00E+00	1.89E-13	3.90E-22
75-45-6	Chlorodifluoromethane	7.67E-03	7.73E-03	7.76E-08	0.00E+00	1.83E-20	2.75E-24	1.55E-04	7.76E-08	0.00E+00	6.47E-21	2.75E-24
75-50-3	Trimethylamine	7.67E-03	5.31E-03	1.43E-07	2.26E-08	7.71E-05	8.67E-15	5.31E-07	1.43E-07	1.13E-09	3.95E-06	8.67E-15
75-52-5	Nitromethane	3.49E-02	1.39E-02	8.47E-07	1.84E-06	1.47E-03	1.63E-13	1.39E-06	8.47E-07	9.20E-08	7.42E-05	1.63E-13
75-55-8	2-Methylaziridine	3.49E-02	3.92E-03	1.09E-06	5.33E-05	3.62E-03	3.99E-13	3.92E-07	1.09E-06	2.67E-06	1.81E-04	3.99E-13
75-61-6	Difluorodibromomethane	7.67E-03	7.73E-03	7.76E-08	0.00E+00	1.83E-20	2.75E-24	7.73E-03	7.76E-08	0.00E+00	6.47E-21	2.75E-24
75-63-8	Trifluorobromomethane	7.67E-03	7.68E-03	7.69E-08	0.00E+00	0.00E+00	0.00E+00	7.68E-03	7.69E-08	0.00E+00	0.00E+00	0.00E+00
75-65-0	2-Methyl-2-propanol	7.67E-03	8.63E-04	2.39E-07	1.17E-05	7.96E-04	8.78E-14	8.63E-08	2.39E-07	5.87E-07	3.99E-05	8.78E-14
75-69-4	Trichlorofluoromethane	7.67E-03	7.71E-03	7.72E-08	0.00E+00	0.00E+00	2.11E-26	7.71E-03	7.72E-08	0.00E+00	0.00E+00	2.11E-26
75-71-8	Dichlorodifluoromethane	7.67E-03	7.68E-03	7.69E-08	0.00E+00	0.00E+00	0.00E+00	7.68E-03	7.69E-08	0.00E+00	0.00E+00	0.00E+00
75-99-0	2,2-Dichloropropionic acid	3.49E-02	2.15E-05	2.82E-06	2.28E-02	6.86E-03	7.54E-13	1.07E-07	2.82E-06	1.14E-03	3.43E-04	7.54E-13
76-03-9	Trichloroacetic acid	7.67E-03	2.19E-06	6.33E-07	5.28E-03	1.51E-03	1.66E-13	4.38E-08	6.33E-07	2.64E-04	7.55E-05	1.66E-13
76-11-9	1,1,1,2-Tetrachloro-2,2-difluoroethane	3.49E-02	3.50E-02	3.50E-07	0.00E+00	0.00E+00	5.66E-34	6.99E-04	3.50E-07	0.00E+00	0.00E+00	5.66E-34
76-12-0	1,1,2,2-Tetrachloro-1,2-difluoroethane	3.49E-02	3.50E-02	3.51E-07	0.00E+00	0.00E+00	9.60E-26	7.01E-04	3.51E-07	0.00E+00	0.00E+00	9.60E-26
76-13-1	1,2,2-Trichloro-1,1,2-trifluoroethane (Freon 113)	7.67E-03	7.68E-03	7.69E-08	0.00E+00	0.00E+00	0.00E+00	1.92E-04	7.69E-08	0.00E+00	0.00E+00	0.00E+00
76-14-2	1,2-Dichloro-1,1,2,2-tetrafluoroethane	7.67E-03	7.71E-03	7.71E-08	0.00E+00	0.00E+00	0.00E+00	7.71E-03	7.71E-08	0.00E+00	0.00E+00	0.00E+00
76-15-3	Chloropentafluoroethane	7.67E-03	7.70E-03	7.70E-08	0.00E+00	0.00E+00	0.00E+00	7.70E-03	7.70E-08	0.00E+00	4.24E-30	0.00E+00
76-44-8	Heptachlor	7.56E-04	6.72E-04	1.03E-08	0.00E+00	6.62E-07	7.72E-17	2.02E-05	1.03E-08	0.00E+00	3.53E-08	7.72E-17
78-83-1	2-Methylpropyl alcohol (Isobutyl alcohol)	3.49E-02	3.92E-03	1.09E-06	5.33E-05	3.62E-03	3.99E-13	3.92E-07	1.09E-06	2.67E-06	1.81E-04	3.99E-13
78-87-5	1,2-Dichloropropane	7.67E-03	7.70E-03	7.92E-08	0.00E+00	3.39E-10	5.85E-20	7.70E-06	7.92E-08	0.00E+00	2.75E-11	5.85E-20
78-92-2	1-Methylpropyl alcohol (2-Butanol)	7.67E-03	8.63E-04	2.39E-07	1.17E-05	7.96E-04	8.78E-14	8.63E-08	2.39E-07	5.87E-07	3.99E-05	8.78E-14
78-93-3	Methyl ethyl ketone (MEK, 2-Butanone)	7.67E-03	3.05E-03	1.86E-07	4.05E-07	3.23E-04	3.59E-14	3.05E-06	1.86E-07	2.02E-08	1.63E-05	3.59E-14
79-00-5	1,1,2-Trichloroethane	7.67E-03	7.66E-03	8.33E-08	0.00E+00	1.88E-08	2.66E-18	7.66E-07	8.33E-08	0.00E+00	1.24E-09	2.66E-18
79-01-6	Trichloroethylene	7.67E-03	7.68E-03	7.78E-08	0.00E+00	1.33E-12	4.37E-22	7.68E-07	7.78E-08	0.00E+00	2.11E-13	4.37E-22
79-09-4	Propionic acid	3.49E-02	3.49E-04	2.44E-06	1.12E-02	7.58E-03	4.77E-12	3.49E-08	2.44E-06	5.58E-04	3.79E-04	4.77E-12
79-10-7	2-Propenoic acid	3.49E-02	3.49E-04	2.44E-06	1.12E-02	7.58E-03	4.77E-12	3.49E-08	2.44E-06	5.58E-04	3.79E-04	4.77E-12
79-20-9	Methyl acetate	3.49E-02	2.41E-02	6.48E-07	1.03E-07	3.50E-04	3.94E-14	2.41E-06	6.48E-07	5.13E-09	1.80E-05	3.94E-14
79-34-5	1,1,2,2-Tetrachloroethane	7.67E-03	7.19E-03	9.69E-08	7.45E-13	2.99E-06	3.51E-16	7.19E-04	9.69E-08	3.73E-14	1.61E-07	3.51E-16
8001-35-2	Toxaphene	2.67E-04	2.34E-05	1.20E-08	8.46E-07	4.11E-05	5.47E-14	1.06E-15	1.20E-14	4.81E-16	7.14E-16	2.73E-19
82-68-8	Pentachloronitrobenzene (PCBN or quintobenzene)	3.49E-02	1.39E-02	8.47E-07	1.84E-06	1.47E-03	1.63E-13	8.32E-05	8.47E-07	9.20E-08	7.42E-05	1.63E-13
83-32-9	Acenaphthene	3.49E-02	2.97E-02	5.30E-07	5.16E-09	7.90E-05	9.06E-15	1.78E-04	5.30E-07	2.58E-10	4.14E-06	9.06E-15
84-66-2	Diethyl phthalate	3.49E-02	3.97E-04	1.92E-06	5.30E-03	6.33E-03	6.97E-13	7.94E-09	1.92E-06	2.65E-04	3.17E-04	6.97E-13
84-74-2	Dibutyl phthalate	3.49E-02	1.07E-03	1.89E-06	1.84E-03	6.66E-03	8.85E-12	1.63E-16	1.89E-12	1.04E-12	6.43E-14	4.42E-17
85-01-8	Phenanthrene	3.49E-02	1.39E-02	8.47E-07	1.84E-06	1.47E-03	1.63E-13	8.32E-05	8.47E-07	9.20E-08	7.42E-05	1.63E-13
85-68-7	Butylbenzyl phthalate	3.49E-02	1.07E-03	1.89E-06	1.84E-03	6.66E-03	8.85E-12	1.63E-16	1.89E-12	1.04E-12	6.43E-14	4.42E-17
86-73-7	Fluorene	3.49E-02	2.41E-02	6.48E-07	1.03E-07	3.50E-04	3.94E-14	1.10E-12	6.48E-13	5.82E-17	2.67E-14	1.97E-19
87-68-3	Hexachlorobutadiene	7.67E-03	7.70E-03	7.79E-08	0.00E+00	1.02E-12	3.44E-22	3.08E-05	7.79E-08	0.00E+00	1.67E-13	3.44E-22
87-86-5	Pentachlorophenol	3.49E-02	2.15E-05	2.82E-06	2.28E-02	6.86E-03	7.54E-13	1.29E-07	2.82E-06	1.14E-03	3.43E-04	7.54E-13
88-06-2	2,4,6-Trichlorophenol	3.49E-02	2.32E-03	1.42E-06	2.55E-04	5.03E-03	3.82E-12	1.39E-05	1.42E-06	1.27E-05	2.52E-04	3.82E-12

Table 13 Summary of Organic Constituents Emission Rates for the WTP

CAS #	COPC	Feed	Unabated Streams					Abated Streams				
		FRP14	PVP01	PJV04	LMP06	HMP06	PJV32	PVP12	PJV11	LVP26	HOP33	PJV34
		WTP Feed	PT Vessel Vent	PT RFD/PJM	LAW Melter	HLW Melter	HLW PJM/RFD	PT Vessel Vent	PT RFD/PJM	LAW Melter	HLW Melter	HLW PJM/RFD
		g/sec	g/sec	g/sec	g/sec	g/sec	g/sec	g/sec	g/sec	g/sec	g/sec	g/sec
88-72-2	2-Nitrotoluene	7.67E-03	1.08E-03	2.31E-07	6.90E-06	7.28E-04	8.02E-14	5.39E-08	2.31E-07	3.45E-07	3.65E-05	8.02E-14
88-75-5	2-Nitrophenol	3.49E-02	4.90E-03	1.05E-06	3.14E-05	3.31E-03	3.65E-13	7.35E-05	1.05E-06	1.57E-06	1.66E-04	3.65E-13
88-85-7	2-sec-Butyl-4,6-dinitrophenol (Dinoseb)	3.49E-02	4.08E-04	3.20E-06	1.88E-02	9.69E-03	1.29E-11	1.86E-14	3.20E-12	1.07E-11	6.94E-14	6.43E-17
88-89-1	Picric acid	3.49E-02	6.84E-08	1.03E-05	3.31E-01	8.46E-03	1.12E-11	1.04E-20	1.03E-11	1.88E-10	5.34E-14	5.61E-17
91-20-3	Naphthalene	1.16E-03	1.10E-03	1.45E-08	0.00E+00	2.77E-07	3.32E-17	5.48E-06	1.45E-08	0.00E+00	1.52E-08	3.32E-17
91-22-5	Quinoline	3.49E-02	9.48E-04	1.45E-06	1.18E-03	5.29E-03	5.82E-13	4.74E-08	1.45E-06	5.89E-05	2.65E-04	5.82E-13
91-58-7	2-Chloronapthalene	3.49E-02	3.27E-02	4.40E-07	3.39E-12	1.36E-05	1.60E-15	1.96E-04	4.40E-07	1.69E-13	7.31E-07	1.60E-15
92-52-4	1,1'-Biphenyl	3.49E-02	3.27E-02	4.40E-07	3.39E-12	1.36E-05	1.60E-15	6.53E-06	4.40E-07	1.69E-13	7.31E-07	1.60E-15
92-93-3	4-Nitrobiphenyl	3.49E-02	2.32E-03	1.42E-06	2.55E-04	5.03E-03	3.82E-12	1.06E-13	1.42E-12	1.45E-13	6.63E-14	1.91E-17
93-72-1	Silvex (2,4,5-TP)	3.49E-02	9.95E-06	2.88E-06	2.40E-02	6.86E-03	7.55E-13	4.52E-16	2.88E-12	1.36E-11	4.34E-14	3.77E-18
93-76-5	2,4,5-T	3.49E-02	9.95E-06	2.88E-06	2.40E-02	6.86E-03	7.55E-13	4.52E-16	2.88E-12	1.36E-11	4.34E-14	3.77E-18
94-75-7	2,4-D and esters (160C typed)	3.49E-02	2.15E-05	2.82E-06	2.28E-02	6.86E-03	7.54E-13	1.29E-07	2.82E-06	1.14E-03	3.43E-04	7.54E-13
95-13-6	Indene	3.49E-02	3.57E-02	3.83E-07	0.00E+00	4.00E-08	5.90E-18	1.79E-05	3.83E-07	0.00E+00	2.75E-09	5.90E-18
95-47-6	o-Xylene	7.67E-03	7.70E-03	7.92E-08	0.00E+00	3.39E-10	5.85E-20	7.70E-07	7.92E-08	0.00E+00	2.75E-11	5.85E-20
95-48-7	o-Cresol (2-Methylphenol)	7.67E-03	2.09E-04	3.20E-07	2.59E-04	1.16E-03	1.28E-13	1.04E-07	3.20E-07	1.30E-05	5.82E-05	1.28E-13
95-49-8	2-Chlorotoluene	3.49E-02	3.50E-02	3.60E-07	0.00E+00	1.54E-09	2.66E-19	1.75E-06	3.60E-07	0.00E+00	1.25E-10	2.66E-19
95-50-1	o-Dichlorobenzene (1,2-Dichlorobenzene)	7.67E-03	7.86E-03	8.43E-08	0.00E+00	8.79E-09	1.30E-18	7.86E-05	8.43E-08	0.00E+00	6.05E-10	1.30E-18
95-57-8	2-Chlorophenol	3.49E-02	3.92E-03	1.09E-06	5.33E-05	3.62E-03	3.99E-13	1.96E-07	1.09E-06	2.67E-06	1.81E-04	3.99E-13
95-95-4	2,4,5-Trichlorophenol	3.49E-02	9.48E-04	1.45E-06	1.18E-03	5.29E-03	5.82E-13	5.69E-06	1.45E-06	5.89E-05	2.65E-04	5.82E-13
96-22-0	3-Pentanone	7.67E-03	5.31E-03	1.43E-07	2.26E-08	7.71E-05	8.67E-15	5.31E-07	1.43E-07	1.13E-09	3.95E-06	8.67E-15
96-69-5	Bis(3-tert-butyl-4-hydroxy-6-methyl-phenyl)sulfide	3.49E-02	3.50E-02	3.60E-07	0.00E+00	1.54E-09	2.66E-19	1.59E-12	3.60E-13	0.00E+00	2.69E-18	1.33E-24
98-51-1	p-tert-Butyltoluene	3.49E-02	3.51E-02	3.53E-07	0.00E+00	2.19E-13	1.13E-22	1.75E-06	3.53E-07	0.00E+00	5.40E-14	1.13E-22
98-82-8	Cumene	3.49E-02	3.50E-02	3.54E-07	0.00E+00	5.34E-12	1.77E-21	1.75E-06	3.54E-07	0.00E+00	8.57E-13	1.77E-21
98-83-9	alpha-Methylstyrene	7.67E-03	7.70E-03	7.92E-08	0.00E+00	3.39E-10	5.85E-20	3.85E-05	7.92E-08	0.00E+00	2.75E-11	5.85E-20
98-86-2	Acetophenone	3.49E-02	4.18E-03	1.07E-06	4.49E-05	3.53E-03	3.89E-13	2.09E-05	1.07E-06	2.25E-06	1.77E-04	3.89E-13
98-95-3	Nitrobenzene	3.49E-02	4.90E-03	1.05E-06	3.14E-05	3.31E-03	3.65E-13	2.45E-07	1.05E-06	1.57E-06	1.66E-04	3.65E-13
Coplanar PCB's												
31508-00-6	2,3',4,4',5-Pentachlorobiphenyl (PBC 118)	8.72E-06	4.18E-05	9.56E-10	3.91E-14	4.78E-08	8.20E-17	1.90E-15	9.56E-16	2.22E-23	3.90E-17	4.10E-22
32598-13-3	3,3',4,4'-Tetrachlorobiphenyl (TCB)	8.72E-06	4.18E-05	9.56E-10	3.91E-14	4.78E-08	8.20E-17	1.90E-15	9.56E-16	2.22E-23	3.90E-17	4.10E-22
32598-14-4	2,3,3',4,4'-Pentachlorobiphenyl (PCB 105)	8.72E-06	4.18E-05	9.56E-10	3.91E-14	4.78E-08	8.20E-17	1.90E-15	9.56E-16	2.22E-23	3.90E-17	4.10E-22
32774-16-6	3,3',4,4',5,5'-Hexachlorobiphenyl	8.72E-06	4.18E-05	9.56E-10	3.91E-14	4.78E-08	8.20E-17	1.90E-15	9.56E-16	2.22E-23	3.90E-17	4.10E-22
35065-29-3	2,2',3,4,4',5,5'-Heptachlorobiphenyl	8.72E-06	4.18E-05	9.56E-10	3.91E-14	4.78E-08	8.20E-17	1.90E-15	9.56E-16	2.22E-23	3.90E-17	4.10E-22
35065-30-6	2,2',3,3',4,4',5-Heptachlorobiphenyl	8.72E-06	4.18E-05	9.56E-10	3.91E-14	4.78E-08	8.20E-17	1.90E-15	9.56E-16	2.22E-23	3.90E-17	4.10E-22
38380-08-4	2,3,3',4,4',5-Hexachlorobiphenyl (PCB 157)	8.72E-06	4.18E-05	9.56E-10	3.91E-14	4.78E-08	8.20E-17	1.90E-15	9.56E-16	2.22E-23	3.90E-17	4.10E-22
39635-31-9	2,3,3',4,4',5,5'-Heptachlorobiphenyl	8.72E-06	4.18E-05	9.56E-10	3.91E-14	4.78E-08	8.20E-17	1.90E-15	9.56E-16	2.22E-23	3.90E-17	4.10E-22
52663-72-6	2,3',4,4',5,5'-Hexachlorobiphenyl	8.72E-06	4.18E-05	9.56E-10	3.91E-14	4.78E-08	8.20E-17	1.90E-15	9.56E-16	2.22E-23	3.90E-17	4.10E-22
57465-28-8	3,3',4,4',5-Pentachlorobiphenyl	8.72E-06	4.18E-05	9.56E-10	3.91E-14	4.78E-08	8.20E-17	1.90E-15	9.56E-16	2.22E-23	3.90E-17	4.10E-22
65510-44-3	2',3,4,4',5-Pentachlorobiphenyl	8.72E-06	4.18E-05	9.56E-10	3.91E-14	4.78E-08	8.20E-17	1.90E-15	9.56E-16	2.22E-23	3.90E-17	4.10E-22
69782-90-7	2,3,3',4,4',5'-Hexachlorobiphenyl	8.72E-06	4.18E-05	9.56E-10	3.91E-14	4.78E-08	8.20E-17	1.90E-15	9.56E-16	2.22E-23	3.90E-17	4.10E-22
70362-50-4	3,4,4',5-Tetrachlorobiphenyl	8.72E-06	4.18E-05	9.56E-10	3.91E-14	4.78E-08	8.20E-17	1.90E-15	9.56E-16	2.22E-23	3.90E-17	4.10E-22
74472-37-0	2,3,4,4',5-Pentachlorobiphenyl	8.72E-06	4.18E-05	9.56E-10	3.91E-14	4.78E-08	8.20E-17	1.90E-15	9.56E-16	2.22E-23	3.90E-17	4.10E-22

Table 14 Estimated Inorganic COPC Emissions

CAS Number	Compound	Feed	Unabated Streams					Abated Streams				
		FRP14	PVP01	PJV04	LMP06	HMP06	PJV32	PVP12	PJV11	LVP26	HOP33	PJV34
		WTP Feed	PT Vessel Vent	PT RFD/PJM	LAW Melter	HLW Melter	HLW PJM/RFD	PT Vessel Vent	PT RFD/PJM	LAW Melter	HLW Melter	HLW PJM/RFD
		g/sec	g/sec	g/sec	g/sec	g/sec	g/sec	g/sec	g/sec	g/sec	g/sec	g/sec
7440-22-4	Silver	8.96E-02	6.83E-07	6.26E-06	6.70E-04	2.41E-03	1.03E-11	5.13E-15	6.26E-12	3.72E-11	1.34E-12	5.15E-17
7429-90-5	Aluminum	1.28E+01	1.42E-04	1.14E-03	1.83E-01	2.77E-02	3.11E-10	1.06E-12	1.14E-09	2.29E-09	3.87E-12	1.55E-15
7440-38-2	Arsenic	9.52E-02	1.79E-04	2.43E-03	6.34E+00	3.29E+01	4.39E-08	1.34E-12	2.43E-09	3.30E-07	1.71E-08	2.19E-13
7440-42-8	Boron	2.76E-01	5.11E-06	3.74E-05	6.30E-01	6.47E-02	1.02E-10	3.84E-14	3.74E-11	1.05E-08	1.20E-11	5.12E-16
7440-39-3	Barium	5.80E-01	3.42E-06	3.59E-05	2.07E-04	5.65E-03	6.33E-11	2.56E-14	3.59E-11	1.05E-12	3.20E-13	3.17E-16
7440-69-9	Bismuth	4.16E-01	1.89E-06	2.75E-05	6.37E-04	3.56E-03	4.01E-11	1.42E-14	2.75E-11	4.08E-11	2.29E-12	2.01E-16
7440-70-2	Calcium	3.52E+00	4.84E-04	3.06E-04	3.34E-01	1.51E-02	1.32E-10	3.64E-12	3.06E-10	8.36E-09	4.21E-12	6.60E-16
7440-43-9	Cadmium	1.30E+00	9.50E-06	1.09E-04	7.45E-02	6.94E-02	1.58E-10	7.13E-14	1.09E-10	2.91E-09	2.47E-11	7.89E-16
16887-00-6	Chloride	2.72E+00	3.06E-05	2.72E-04	4.21E-01	4.23E-02	1.22E-10	2.30E-13	2.72E-10	7.01E-09	7.87E-15	6.08E-16
18540-29-9	Chromium (hexavalent)	1.80E+00	1.66E-05	1.65E-04	1.57E-02	2.42E-03	2.72E-11	1.25E-13	1.65E-10	1.93E-09	3.30E-12	1.36E-16
7440-50-8	Copper	8.26E-02	6.47E-07	5.74E-06	1.05E-04	3.09E-04	6.57E-12	4.86E-15	5.74E-12	6.05E-12	1.78E-13	3.29E-17
16984-48-8	Flouride	3.66E+00	3.53E-05	3.61E-04	6.51E-01	1.37E-01	3.30E-10	2.65E-13	3.61E-10	1.09E-08	2.54E-14	1.65E-15
7439-89-6	Iron	4.51E+00	3.36E-05	3.06E-04	1.08E-01	1.85E-02	3.92E-10	2.52E-13	3.06E-10	1.35E-09	2.58E-12	1.96E-15
7439-97-6	Mercury	1.70E-02	1.40E-06	1.92E-05	2.51E-02	2.65E-01	3.36E-10	1.40E-06	1.92E-05	6.99E-05	1.26E-05	3.36E-10
7440-09-7	Potassium	1.18E+01	1.25E-04	1.10E-03	5.54E-01	6.19E-02	2.02E-10	9.39E-13	1.10E-09	2.72E-08	3.04E-11	1.01E-15
7439-93-2	Lithium	6.26E-02	7.36E-07	7.81E-06	1.10E-01	5.58E-03	9.75E-12	5.52E-15	7.81E-12	6.53E-09	3.32E-12	4.88E-17
7439-95-4	Magnesium	3.31E-01	1.83E-05	2.31E-05	4.09E-02	1.34E-03	2.84E-11	1.38E-13	2.31E-11	1.02E-09	3.73E-13	1.42E-16
7439-96-5	Manganese	1.25E+00	1.02E-05	9.02E-05	5.39E-03	1.14E-02	9.96E-11	7.62E-14	9.02E-11	8.98E-11	2.12E-12	4.98E-16
7440-23-5	Sodium	4.02E+01	4.88E-04	3.92E-03	3.69E-01	6.39E-02	7.19E-10	3.66E-12	3.92E-09	3.55E-08	6.15E-11	3.59E-15
7440-02-0	Nickel	5.87E-01	3.87E-06	4.53E-05	3.01E-03	3.68E-03	3.72E-11	2.90E-14	4.53E-11	1.27E-10	1.73E-12	1.86E-16
14797-65-0	Nitrite	1.56E+01	1.44E-04	1.42E-03	0.00E+00	0.00E+00	2.06E-10	1.08E-12	1.42E-09	1.34E-12	1.37E-15	1.03E-15
14797-55-8	Nitrate	4.66E+01	7.70E-04	7.49E-03	0.00E+00	0.00E+00	1.42E-09	5.78E-12	7.49E-09	6.98E-12	9.58E-15	7.11E-15
14280-30-9	Hydroxide	5.84E+01	5.76E-04	4.21E-03	0.00E+00	0.00E+00	1.78E-09	4.32E-12	4.21E-09	3.21E-12	1.19E-14	8.90E-15
7723-14-0	Phosphorous	0.00E+00	6.41E-11	2.84E-12	7.73E-02	1.71E-02	1.05E-17	4.81E-19	2.84E-18	3.86E-07	8.56E-08	5.27E-23
7439-92-1	Lead	3.68E-01	2.68E-06	2.98E-05	1.06E-03	7.90E-04	1.68E-11	2.01E-14	2.98E-11	7.66E-11	5.73E-13	8.40E-17
14265-44-2	Phosphate	1.16E+01	1.45E-04	1.04E-03	0.00E+00	0.00E+00	2.10E-10	1.09E-12	1.04E-09	9.48E-13	1.40E-15	1.05E-15
63705-05-5	Total Sulfur	0.00E+00	1.44E-07	8.60E-12	0.00E+00	0.00E+00	1.43E-17	1.08E-15	8.60E-18	1.06E-02	1.41E-02	7.17E-23
7440-21-3	Silicon	2.35E+00	2.61E-05	1.74E-04	4.20E-01	4.27E-02	2.93E-10	1.96E-13	1.74E-10	7.00E-09	7.94E-12	1.47E-15
14808-79-8	Sulfate	5.87E+00	5.91E-05	5.40E-04	0.00E+00	0.00E+00	6.84E-11	4.44E-13	5.40E-10	5.16E-13	4.56E-16	3.42E-16
7440-24-6	Strontium (total)	7.14E-02	2.93E-07	4.56E-06	6.38E-05	6.57E-04	7.37E-12	2.20E-15	4.56E-12	7.98E-13	9.16E-14	3.68E-17
7440-66-6	Zinc	9.56E-02	1.41E-06	1.07E-05	1.42E-01	9.75E-03	1.85E-11	1.06E-14	1.07E-11	3.23E-09	2.47E-12	9.23E-17
7440-67-7	Zirconium	1.91E+00	1.11E-05	1.18E-04	4.32E-02	6.23E-03	1.94E-10	8.36E-14	1.18E-10	7.20E-10	1.16E-12	9.72E-16
7440-41-7	Beryllium	1.29E-01	7.50E-07	7.93E-06	2.89E-03	4.19E-04	1.31E-11	5.63E-15	7.93E-12	4.82E-11	7.80E-14	6.55E-17
57-12-5	Cyanide	3.17E+00	3.94E-05	2.83E-04	6.46E-02	1.43E-02	5.73E-11	2.96E-13	2.83E-10	2.58E-13	3.82E-16	2.86E-16

Table 14 Estimated Inorganic COPC Emissions

CAS Number	Compound	Feed	Unabated Streams					Abated Streams				
		FRP14	PVP01	PJV04	LMP06	HMP06	PJV32	PVP12	PJV11	LVP26	HOP33	PJV34
		WTP Feed	PT Vessel Vent	PT RFD/PJM	LAW Melter	HLW Melter	HLW PJM/RFD	PT Vessel Vent	PT RFD/PJM	LAW Melter	HLW Melter	HLW PJM/RFD
7440-48-4	Cobalt	8.92E-01	4.60E-06	5.42E-05	5.32E-05	4.42E-03	9.41E-11	3.46E-14	5.42E-11	4.16E-12	3.46E-12	4.70E-16
7439-98-7	Molybdenum	1.29E+00	5.82E-06	8.50E-05	1.96E-03	1.10E-02	1.24E-10	4.37E-14	8.50E-11	1.26E-10	7.08E-12	6.21E-16
7440-16-6	Rhodium	2.58E-01	1.50E-06	1.59E-05	5.78E-03	8.39E-04	2.62E-11	1.13E-14	1.59E-11	9.64E-11	1.56E-13	1.31E-16
7440-36-0	Antimony	1.66E+00	7.67E-06	1.11E-04	2.76E-03	1.40E-02	1.58E-10	5.76E-14	1.11E-10	3.40E-10	1.72E-11	7.89E-16
7782-49-2	Selenium	1.03E+00	9.92E-06	1.01E-04	1.83E-01	3.87E-02	9.37E-11	7.45E-14	1.01E-10	3.05E-09	7.21E-15	4.69E-16
7440-31-5	Tin	1.03E-02	5.21E-08	7.06E-07	1.22E-05	3.92E-05	8.33E-13	3.91E-16	7.06E-13	1.53E-13	5.47E-15	4.16E-18
7440-25-7	Tantalum	5.95E-02	3.47E-07	3.66E-06	1.33E-03	1.94E-04	6.05E-12	2.60E-15	3.66E-12	2.23E-11	3.60E-14	3.03E-17
7440-28-0	Thallium	8.93E-01	8.61E-06	8.79E-05	1.59E-01	3.36E-02	8.13E-11	6.46E-14	8.79E-11	2.65E-09	6.25E-15	4.07E-16
7440-61-1	Uranium	2.77E+01	2.44E-04	2.03E-03	4.98E-02	8.93E-02	1.90E-09	1.83E-12	2.03E-09	6.24E-10	1.25E-11	9.48E-15
7440-62-2	Vanadium	6.34E-02	2.87E-07	4.19E-06	9.64E-05	5.43E-04	6.12E-12	2.15E-15	4.19E-12	6.18E-12	3.49E-13	3.06E-17
7440-33-7	Tungsten	4.75E-01	2.77E-06	2.93E-05	1.07E-02	1.55E-03	4.83E-11	2.08E-14	2.93E-11	1.78E-10	2.88E-13	2.42E-16
7440-65-5	Yttrium	3.17E-01	1.17E-06	1.95E-05	8.09E-05	3.12E-03	3.51E-11	8.78E-15	1.95E-11	1.01E-12	4.36E-13	1.75E-16
630-08-0	Carbon monoxide	0.00E+00	7.58E-22	5.55E-22	6.37E-01	1.05E-01	1.68E-27	2.09E-23	5.58E-22	6.37E-02	1.05E-02	3.74E-22
10102-43-9	Nitric Oxide	0.00E+00	3.71E-27	5.77E-27	2.24E+01	4.33E+00	1.47E-32	1.60E-28	5.58E-27	9.34E-01	2.17E-01	6.99E-39
10102-44-0	Nitrogen dioxide	0.00E+00	2.73E-21	2.55E-28	3.13E+00	6.05E-01	2.69E-32	1.07E-18	2.35E-28	1.30E-01	3.03E-02	3.38E-44
7446-09-5	Sulfur dioxide	0.00E+00	1.40E-23	4.51E-27	1.28E+00	1.69E-01	2.98E-33	7.93E-24	1.34E-24	1.06E-01	1.41E-01	0.00E+00
7664-41-7	Ammonia/Ammonium	0.00E+00	1.60E-03	1.32E-05	3.58E-03	5.75E-02	5.99E-11	5.32E-04	1.35E-05	3.27E-02	1.89E-02	9.75E-11
	Total	2.67E+02	5.25E-03	2.83E-02	3.85E+01	3.93E+01	5.39E-08	5.33E-04	3.28E-05	1.28E+00	4.31E-01	4.34E-10

Table 15 Estimated Radionuclide COPC Emissions

CAS Number	Compound	Feed	Unabated Streams					Abated Streams				
		FRP14	PVP01	PJV04	LMP06	HMP06	PJV32	PVP12	PJV11	LVP26	HOP33	PJV34
		WTP Feed	PT Vessel Vent	PT RFD/PJM	LAW Melter	HLW Melter	HLW PJM/RFD	PT Vessel Vent	PT RFD/PJM	LAW Melter	HLW Melter	HLW PJM/RFD
		Ci/d	Ci/d	Ci/d	Ci/d	Ci/d	Ci/d	Ci/d	Ci/d	Ci/d	Ci/d	Ci/d
14596-10-2	Americium-241	9.62E+02	3.38E-03	5.81E-02	6.53E-03	4.83E+00	1.02E-07	2.54E-11	5.81E-08	8.17E-11	6.74E-10	5.12E-13
14762-75-5	Carbon-14	1.08E+00	1.38E-05	9.84E-05	9.17E-01	1.62E-01	1.62E-11	1.38E-05	9.84E-05	9.17E-01	1.62E-01	1.62E-11
10198-40-0	Cobalt-60	1.08E+02	5.57E-04	6.57E-03	6.51E-03	5.37E-01	1.14E-08	4.18E-12	6.57E-09	5.08E-10	4.20E-10	5.70E-14
15757-87-6	Curium-243	3.20E+01	1.61E-04	1.93E-03	1.74E-05	1.61E-01	3.41E-09	1.21E-12	1.93E-09	2.17E-13	2.24E-11	1.71E-14
13981-15-2	Curium-244	2.40E+01	1.21E-04	1.45E-03	1.87E-05	1.21E-01	2.56E-09	9.08E-13	1.45E-09	2.34E-13	1.68E-11	1.28E-14
10045-97-3	Cesium-137	9.28E+04	6.03E-01	7.62E+00	4.64E-01	3.20E+03	1.36E-05	4.53E-09	7.62E-06	3.22E-08	2.22E-06	6.81E-11
14683-23-9	Europium-152	1.01E+01	6.53E-05	7.74E-04	2.28E-02	2.80E-02	5.94E-10	4.90E-13	7.74E-10	2.85E-10	3.91E-12	2.97E-15
15585-10-1	Europium-154	5.72E+02	2.10E-03	3.50E-02	7.55E-02	2.80E+00	5.93E-08	1.58E-11	3.50E-08	9.45E-10	3.90E-10	2.97E-13
14391-16-3	Europium-155	3.38E+02	1.36E-03	2.13E-02	1.30E-01	1.57E+00	3.33E-08	1.02E-11	2.13E-08	1.63E-09	2.19E-10	1.66E-13
10028-17-8	Tritium	1.43E+01	3.30E-01	8.30E-04	4.49E-01	5.03E+00	6.01E-09	2.63E-01	8.30E-04	6.37E-02	5.00E-01	6.01E-09
15046-84-1	Iodine-129	1.42E-02	2.19E-07	1.30E-06	1.07E-02	4.41E-03	1.38E-12	6.57E-08	1.30E-06	8.90E-05	3.67E-06	1.38E-12
13981-37-8	Nickel-63	5.96E+01	2.68E-04	3.92E-03	9.37E-02	5.84E-01	5.91E-09	2.01E-12	3.92E-09	3.97E-09	2.75E-10	2.96E-14
13994-20-2	Neptunium-237	7.93E-01	4.02E-06	4.79E-05	2.81E-05	3.97E-03	8.42E-11	3.02E-14	4.79E-11	3.51E-13	5.54E-13	4.21E-16
13981-16-3	Plutonium-238	3.74E+00	1.32E-05	2.26E-04	3.79E-05	1.88E-02	3.98E-10	9.89E-14	2.26E-10	4.74E-13	2.62E-12	1.99E-15
15117-48-3	Plutonium-239	3.32E+01	1.17E-04	2.01E-03	4.43E-04	1.66E-01	3.53E-09	8.78E-13	2.01E-09	5.54E-12	2.32E-11	1.76E-14
14119-33-6	Plutonium-240	1.83E+00	6.52E-06	1.11E-04	7.63E-05	9.12E-03	1.94E-10	4.89E-14	1.11E-10	9.55E-13	1.27E-12	9.68E-16
14119-32-5	Plutonium-241	2.35E+02	8.27E-04	1.42E-02	1.89E-03	1.18E+00	2.50E-08	6.21E-12	1.42E-08	2.36E-11	1.65E-10	1.25E-13
14234-35-6	Antimony-125	4.18E+02	1.93E-03	2.79E-02	6.99E-01	3.52E+00	3.96E-08	1.45E-11	2.79E-08	8.59E-08	4.33E-09	1.98E-13
15715-94-3	Samarium-151	2.02E+03	1.27E-02	1.53E-01	4.32E+00	5.80E+00	1.23E-07	9.55E-11	1.53E-07	5.41E-08	8.09E-10	6.15E-13
15832-50-5	Tin-126	2.18E+00	1.11E-05	1.50E-04	2.61E-03	8.31E-03	1.76E-10	8.31E-14	1.50E-10	3.27E-11	1.16E-12	8.81E-16
10098-97-2	Strontium-90	1.10E+05	4.05E-01	6.77E+00	2.82E+01	1.08E+03	1.21E-05	3.04E-09	6.77E-06	3.53E-07	1.51E-07	6.06E-11
14133-76-7	Technetium-99	1.87E+02	1.53E-03	1.84E-02	3.75E-01	9.32E+01	1.43E-07	1.15E-11	1.84E-08	2.41E-08	5.98E-08	7.17E-13
7440-29-1	Thorium-232	1.05E-02	7.05E-08	7.03E-07	9.67E-06	4.31E-05	9.13E-13	5.29E-16	7.03E-13	1.21E-13	6.01E-15	4.57E-18
13968-55-3	Uranium-233	4.91E-02	5.73E-07	4.25E-06	1.79E-04	6.64E-05	1.41E-12	4.30E-15	4.25E-12	2.25E-12	9.26E-15	7.04E-18
13966-29-5	Uranium-234	5.79E-02	4.81E-07	4.24E-06	1.04E-04	1.86E-04	3.95E-12	3.61E-15	4.24E-12	1.31E-12	2.60E-14	1.97E-17
15117-96-1	Uranium-235	3.56E-03	2.52E-08	2.44E-07	4.03E-06	1.38E-05	2.93E-13	1.89E-16	2.44E-13	5.05E-14	1.93E-15	1.47E-18
13982-70-2	Uranium-236	3.75E-03	4.08E-08	3.13E-07	1.21E-05	6.68E-06	1.42E-13	3.06E-16	3.13E-13	1.51E-13	9.33E-16	7.09E-19
7440-61-1	Uranium-238	3.67E-02	3.26E-07	2.78E-06	7.77E-05	1.07E-04	2.26E-12	2.45E-15	2.78E-12	9.72E-13	1.49E-14	1.13E-17
10098-91-6	Yttrium-90	1.42E+05	5.23E-01	8.74E+00	3.62E+01	1.40E+03	1.57E-05	3.93E-09	8.74E-06	4.52E-07	1.95E-07	7.84E-11
13967-48-1	Ruthenium-106	1.67E+01	1.61E-04	1.64E-03	2.97E+00	6.29E-01	1.52E-09	1.21E-12	1.64E-09	4.96E-08	1.17E-13	7.61E-15
13967-70-9	Cesium-134	1.20E+01	7.80E-05	9.86E-04	6.03E-05	4.15E-01	1.77E-09	5.86E-13	9.86E-10	4.19E-12	2.88E-10	8.86E-15
13981-97-0	Barium-137m	1.25E+04	8.13E-02	1.03E+00	6.28E-02	4.32E+02	1.84E-06	6.10E-10	1.03E-06	4.36E-09	3.00E-07	9.22E-12
13982-10-0	Plutonium-242	5.50E-03	1.94E-08	3.32E-07	4.38E-08	2.76E-05	5.86E-13	1.45E-16	3.32E-13	5.49E-16	3.85E-15	2.93E-18
13982-63-3	Radium-226	5.81E-04	3.38E-09	3.58E-08	1.30E-05	1.89E-06	5.91E-14	2.54E-17	3.58E-14	2.17E-13	3.52E-16	2.95E-19

Table 15 Estimated Radionuclide COPC Emissions

CAS Number	Compound	Feed	Unabated Streams					Abated Streams				
		FRP14	PVP01	PJV04	LMP06	HMP06	PJV32	PVP12	PJV11	LVP26	HOP33	PJV34
		WTP Feed	PT Vessel Vent	PT RFD/PJM	LAW Melter	HLW Melter	HLW PJM/RFD	PT Vessel Vent	PT RFD/PJM	LAW Melter	HLW Melter	HLW PJM/RFD
14158-29-3	Uranium-232	5.20E-01	6.59E-06	4.49E-05	1.90E-03	7.04E-04	1.50E-11	4.95E-14	4.49E-11	2.38E-11	9.83E-14	7.48E-17
14331-85-2	Protactinium-231	6.46E+00	3.76E-05	3.98E-04	1.45E-01	2.10E-02	6.57E-10	2.82E-13	3.98E-10	2.42E-09	3.91E-12	3.28E-15
14336-70-0	Nickel-59	8.68E+00	3.90E-05	5.70E-04	1.35E-02	8.50E-02	8.62E-10	2.93E-13	5.70E-10	5.74E-10	4.01E-11	4.31E-15
14952-40-0	Actinium-227	2.94E+00	1.71E-05	1.81E-04	6.58E-02	9.56E-03	2.99E-10	1.28E-13	1.81E-10	1.10E-09	1.78E-12	1.49E-15
14993-75-0	Americium-243	1.51E-01	5.31E-07	9.12E-06	1.02E-06	7.58E-04	1.61E-11	3.98E-15	9.12E-12	1.27E-14	1.06E-13	8.04E-17
15262-20-1	Radium-228	6.08E-01	3.54E-06	3.74E-05	1.36E-02	1.98E-03	6.18E-11	2.66E-14	3.74E-11	2.27E-10	3.68E-13	3.09E-16
15510-73-3	Curium-242	6.19E-01	3.12E-06	3.74E-05	3.35E-07	3.11E-03	6.60E-11	2.34E-14	3.74E-11	4.20E-15	4.34E-13	3.30E-16
15594-54-4	Thorium-229	2.53E-02	1.69E-07	1.69E-06	2.32E-05	1.04E-04	2.21E-12	1.27E-15	1.69E-12	2.90E-13	1.45E-14	1.10E-17
15751-77-6	Zirconium-93	2.09E+01	1.22E-04	1.28E-03	4.68E-01	6.80E-02	2.12E-09	9.12E-13	1.28E-09	7.81E-09	1.26E-11	1.06E-14
7440-03-1	Niobium-93m	1.88E+01	1.09E-04	1.16E-03	4.22E-01	6.12E-02	1.91E-09	8.22E-13	1.16E-09	7.03E-09	1.14E-11	9.56E-15
no cas #	Cadmium-113m	5.20E+01	3.79E-04	4.34E-03	2.98E+00	2.79E+00	6.37E-09	2.85E-12	4.34E-09	1.16E-07	9.91E-10	3.19E-14
no cas #	Selenium-79	4.82E-01	4.64E-06	4.74E-05	8.57E-02	1.81E-02	4.39E-11	3.49E-14	4.74E-11	1.43E-09	3.37E-15	2.19E-16
	Total	3.62E+05	1.97E+00	2.45E+01	7.92E+01	6.23E+03	4.38E-05	2.63E-01	9.54E-04	9.81E-01	6.62E-01	6.25E-09

Table 16 WTP PIC Emissions

CAS Registry Number	Compound	PT Stack Flowrate (g/sec)	LAW Stack Flowrate (g/sec)	HLW Stack Flowrate (g/sec)
100-02-7	4-Nitrophenol	1.75E-05	3.09E-05	7.81E-06
100-44-7	Benzyl chloride	2.33E-06	4.12E-06	1.04E-06
100-51-6	Benzyl alcohol	1.75E-05	3.09E-05	7.81E-06
100-52-7	Benzaldehyde	1.75E-05	3.09E-05	7.81E-06
101-77-9	4,4-Methylenedianiline	1.75E-05	3.09E-05	7.81E-06
103-33-3	Azobenzene	1.75E-05	3.09E-05	7.81E-06
103-65-1	n-Propyl benzene (Isocumene)	2.33E-06	4.12E-06	1.04E-06
104-51-8	n-Butylbenzene	2.33E-06	4.12E-06	1.04E-06
105-67-9	2,4-Dimethylphenol	1.75E-05	3.09E-05	7.81E-06
106-43-4	4-Chlorotoluene (p-Tolyl chloride)	2.33E-06	4.12E-06	1.04E-06
106-44-5	p-Cresol (4-Methyl phenol)	1.75E-05	3.09E-05	7.81E-06
106-47-8	p-Chloroaniline	1.75E-05	3.09E-05	7.81E-06
106-49-0	p-Toluidine	1.75E-05	3.09E-05	7.81E-06
106-51-4	Quinone	1.75E-05	3.09E-05	7.81E-06
106-89-8	Epichlorohydrin (1-chloro-2,3-epoxypropane)	2.33E-06	4.12E-06	1.04E-06
107-19-7	Propargyl alcohol	2.33E-06	4.12E-06	1.04E-06
107-21-1	Ethylene glycol	2.33E-06	4.12E-06	1.04E-06
107-98-2	Propylene gylcol monomethyl ether	1.75E-05	3.09E-05	7.81E-06
108-60-1	Dichloroisopropyl ether	1.75E-05	3.09E-05	7.81E-06
108-67-8	1,3,5-Trimethyl benzene	2.33E-06	4.12E-06	1.04E-06
108-86-1	Bromobenzene (Phenyl bromide)	2.33E-06	4.12E-06	1.04E-06
109-77-3	Malononitrile	2.33E-06	4.12E-06	1.04E-06
109-86-4	2-Methoxyethanol	1.75E-05	3.09E-05	7.81E-06
110-80-5	2-Ethoxyethanol	1.75E-05	3.09E-05	7.81E-06
111-15-9	Ethylene glycol monoethyl ether acetate	1.75E-05	3.09E-05	7.81E-06
111-44-4	Bis(2-chloroethyl) ether	1.75E-05	3.09E-05	7.81E-06
111-91-1	Bis(2-chloroethoxy)methane	1.75E-05	3.09E-05	7.81E-06
1120-71-4	1,3-Propane sultone	1.75E-05	3.09E-05	7.81E-06
119-90-4	3,3'-Dimethoxybenzidine (ortol-dianisidine)	1.75E-05	3.09E-05	7.81E-06
121-14-2	2,4-Dinitrotoluene	1.75E-05	3.09E-05	7.81E-06
122-66-7	1,2-Diphenylhydrazine	1.75E-05	3.09E-05	7.81E-06
123-33-1	Maleic hydrazide	1.75E-05	3.09E-05	7.81E-06
124-48-1	Chlorodibromomethane	2.33E-06	4.12E-06	1.04E-06
131-11-3	Dimethylphthalate	1.75E-05	3.09E-05	7.81E-06
131-89-5	2-Cyclohexyl-4,6-dinitrophenol	1.75E-05	3.09E-05	7.81E-06
133-06-2	Captan	1.75E-05	3.09E-05	7.81E-06
135-98-8	sec-Butylbenzene	2.33E-06	4.12E-06	1.04E-06
145-73-3	Endothall	1.75E-05	3.09E-05	7.81E-06
156-59-2	cis-1,2-Dichloroethene	2.33E-06	4.12E-06	1.04E-06
1746-01-6	2,3,7,8-Tetrachlorodibenzo(p)dioxin (TCDD)	1.10E-11	1.93E-11	4.88E-12
192-97-2	Benzo(e)pyrene	3.50E-06	6.19E-06	1.56E-06
19408-74-3	1,2,3,7,8,9-Hexachlorodibenzo(p)dioxin	1.82E-11	3.22E-11	8.12E-12
23950-58-5	Pronamide	1.75E-05	3.09E-05	7.81E-06
25013-15-4	Methyl styrene (mixed isomers)	2.33E-06	4.12E-06	1.04E-06
3268-87-9	Octachlorodibenzo(p)dioxin	9.12E-11	1.61E-10	4.07E-11
35822-46-9	1,2,3,4,6,7,8-Heptachlorodibenzo(p)dioxin	3.65E-11	6.45E-11	1.63E-11
39001-02-0	Octachlorodibenzofuran	7.30E-11	1.29E-10	3.25E-11
39227-28-6	1,2,3,4,7,8-Hexachlorodibenzo(p)dioxin	1.82E-11	3.22E-11	8.12E-12
40321-76-4	1,2,3,7,8-Pentachlorodibenzo(p)dioxin	1.82E-11	3.22E-11	8.12E-12
41851-50-7	Chlorocyclopentadiene	2.33E-06	4.12E-06	1.04E-06
460-19-5	Cyanogen	2.33E-06	4.12E-06	1.04E-06

Table 16 WTP PIC Emissions

CAS Registry Number	Compound	PT Stack Flowrate (g/sec)	LAW Stack Flowrate (g/sec)	HLW Stack Flowrate (g/sec)
506-68-3	Cyanogen bromide	1.75E-05	3.09E-05	7.81E-06
506-77-4	Cyanogen chloride	2.33E-06	4.12E-06	1.04E-06
510-15-6	Chlorobenzilate	1.75E-05	3.09E-05	7.81E-06
51207-31-9	2,3,7,8-Tetrachlorodibenzofuran	9.12E-12	1.61E-11	4.07E-12
51-28-5	2,4-Dinitrophenol	1.75E-05	3.09E-05	7.81E-06
51-79-6	Ethyl Carbamate (urethane)	1.75E-05	3.09E-05	7.81E-06
528-29-0	o-Dinitrobenzene	1.75E-05	3.09E-05	7.81E-06
532-27-4	2-Chloroacetophenone	1.75E-05	3.09E-05	7.81E-06
534-52-1	4,6-Dinitro-o-cresol	1.75E-05	3.09E-05	7.81E-06
5385-75-1	Dibenzo(a,e)fluoranthene	3.50E-06	6.19E-06	1.56E-06
540-73-8	1,2-Dimethylhydrazine	2.33E-06	4.12E-06	1.04E-06
542-75-6	1,3-Dichloropropene	2.33E-06	4.12E-06	1.04E-06
542-88-1	Dichloromethyl ether	2.33E-06	4.12E-06	1.04E-06
55673-89-7	1,2,3,4,7,8,9-Heptachlorodibenzofuran	1.82E-11	3.22E-11	8.12E-12
57117-31-4	2,3,4,7,8-Pentachlorodibenzofuran	9.12E-12	1.61E-11	4.07E-12
57117-41-6	1,2,3,7,8-Pentachlorodibenzofuran	9.12E-12	1.61E-11	4.07E-12
57117-44-9	1,2,3,6,7,8-Hexachlorodibenzofuran	1.46E-11	2.58E-11	6.51E-12
57-24-9	Strychnine	1.75E-05	3.09E-05	7.81E-06
57653-85-7	1,2,3,6,7,8-Hexachlorodibenzo(p)dioxin	1.82E-11	3.22E-11	8.12E-12
57-74-9	Chlordane	1.75E-05	3.09E-05	7.81E-06
584-84-9	2,4-Toluene diisocyante	1.75E-05	3.09E-05	7.81E-06
593-60-2	Bromoethene	2.33E-06	4.12E-06	1.04E-06
60-11-7	Dimethyl aminoazobenzene	1.75E-05	3.09E-05	7.81E-06
606-20-2	2,6-Dinitrotoluene	1.75E-05	3.09E-05	7.81E-06
60851-34-5	2,3,4,6,7,8-Hexachlorodibenzofuran	1.65E-11	2.91E-11	7.34E-12
608-93-5	Pentachlorobenzene	1.75E-05	3.09E-05	7.81E-06
61626-71-9	Dichloropentadiene	2.33E-06	4.12E-06	1.04E-06
62-50-0	Ethyl methanesulfonate	1.75E-05	3.09E-05	7.81E-06
62-53-3	Aniline	1.75E-05	3.09E-05	7.81E-06
65-85-0	Benzoic acid	1.75E-05	3.09E-05	7.81E-06
67562-39-4	1,2,3,4,6,7,8-Heptachlorodibenzofuran	1.82E-11	3.22E-11	8.12E-12
70-30-4	Hexachlorophene	1.75E-05	3.09E-05	7.81E-06
70648-26-9	1,2,3,4,7,8-Hexachlorodibenzofuran	1.65E-11	2.91E-11	7.34E-12
72918-21-9	1,2,3,7,8,9-Hexachlorodibenzofuran	1.82E-11	3.22E-11	8.12E-12
74-88-4	Iodomethane (Methyl iodide)	2.33E-06	4.12E-06	1.04E-06
74-95-3	Methylene bromide	2.33E-06	4.12E-06	1.04E-06
75-25-2	Bromoform	2.33E-06	4.12E-06	1.04E-06
75-29-6	2-Chloropropane	2.33E-06	4.12E-06	1.04E-06
75-44-5	Phosgene	2.33E-06	4.12E-06	1.04E-06
76-01-7	Pentachloroethane	2.33E-06	4.12E-06	1.04E-06
764-41-0	1,4-Dichloro-2-butene	2.33E-06	4.12E-06	1.04E-06
765-34-4	Glycidylaldehyde	1.75E-05	3.09E-05	7.81E-06
77-47-4	Hexachlorocyclopentadiene	1.75E-05	3.09E-05	7.81E-06
77-78-1	Dimethyl sulfate	1.75E-05	3.09E-05	7.81E-06
80-62-6	Methyl methacrylate	2.33E-06	4.12E-06	1.04E-06
822-06-0	Hexamethylene-1,5-diisocyanate	1.75E-05	3.09E-05	7.81E-06
823-40-5	Toluene-2,6-diamine	1.75E-05	3.09E-05	7.81E-06
85-44-9	Phthalic anhydride	1.75E-05	3.09E-05	7.81E-06
87-61-6	1,2,3-Trichlorobenzene	2.33E-06	4.12E-06	1.04E-06
88-74-4	o-Nitroaniline (2-Nitroaniline)	1.75E-05	3.09E-05	7.81E-06

Table 16 WTP PIC Emissions

CAS Registry Number	Compound	PT Stack Flowrate (g/sec)	LAW Stack Flowrate (g/sec)	HLW Stack Flowrate (g/sec)
90-04-0	o-Anisidine	1.75E-05	3.09E-05	7.81E-06
91-57-6	2-Methylnaphthalene	3.50E-06	6.19E-06	1.56E-06
91-94-1	3,3'-Dichlorobenzidine	1.75E-05	3.09E-05	7.81E-06
924-16-3	N-Nitrosodi-n-butylamine	2.33E-06	4.12E-06	1.04E-06
94-59-7	Safrole	1.75E-05	3.09E-05	7.81E-06
95-53-4	o-Toluidine	2.33E-06	4.12E-06	1.04E-06
95-63-6	1,2,4-Trimethyl benzene	2.33E-06	4.12E-06	1.04E-06
95-94-3	1,2,4,5-Tetrachlorobenzene	1.75E-05	3.09E-05	7.81E-06
96-12-8	1,2-Dibromo-3-chloropropane	1.75E-05	3.09E-05	7.81E-06
96-18-4	1,2,3-Trichloropropane	2.33E-06	4.12E-06	1.04E-06
96-45-7	Ethylene thiourea	1.75E-05	3.09E-05	7.81E-06
97-63-2	Ethyl methacrylate	2.33E-06	4.12E-06	1.04E-06
98-01-1	Furfural	1.75E-05	3.09E-05	7.81E-06
98-06-6	tert-Butyl benzene	2.33E-06	4.12E-06	1.04E-06
98-07-7	Benzotrichloride	1.75E-05	3.09E-05	7.81E-06
99-35-4	1,3,5-Trinitrobenzene	1.75E-05	3.09E-05	7.81E-06
99-65-0	1,3-Dinitrobenzene	1.75E-05	3.09E-05	7.81E-06
99-87-6	p-Cymene	2.33E-06	4.12E-06	1.04E-06
no cas #	Dibenzo(a,h)fluoranthene	3.50E-06	6.19E-06	1.56E-06

Figure 1 Simplified WTP Process Overview

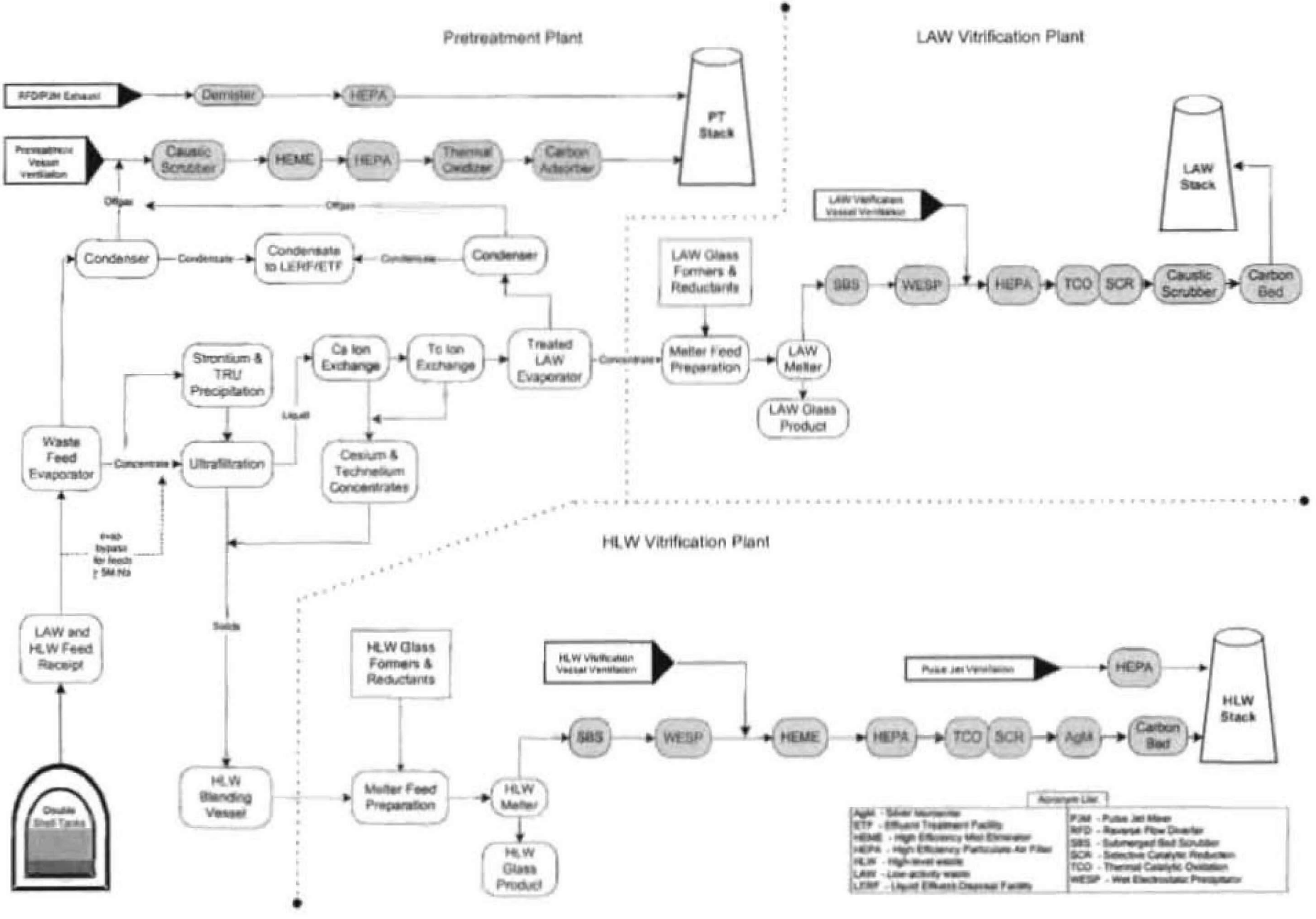

Figure 2 Simplified Pretreatment Process Flowsheet (sheet 1 of 2)

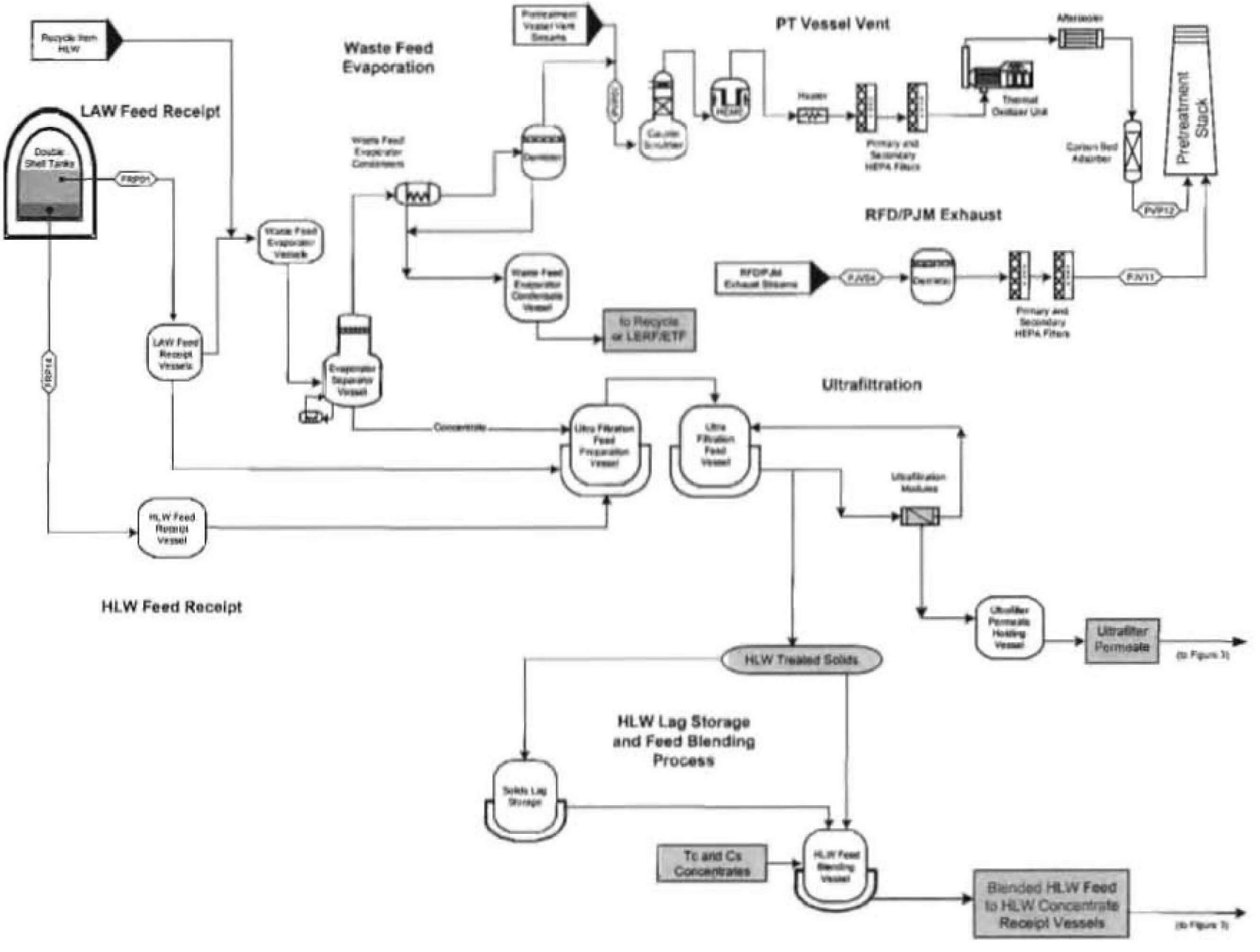

Figure 3 Simplified Pretreatment Process Flowsheet (sheet 2 of 2)

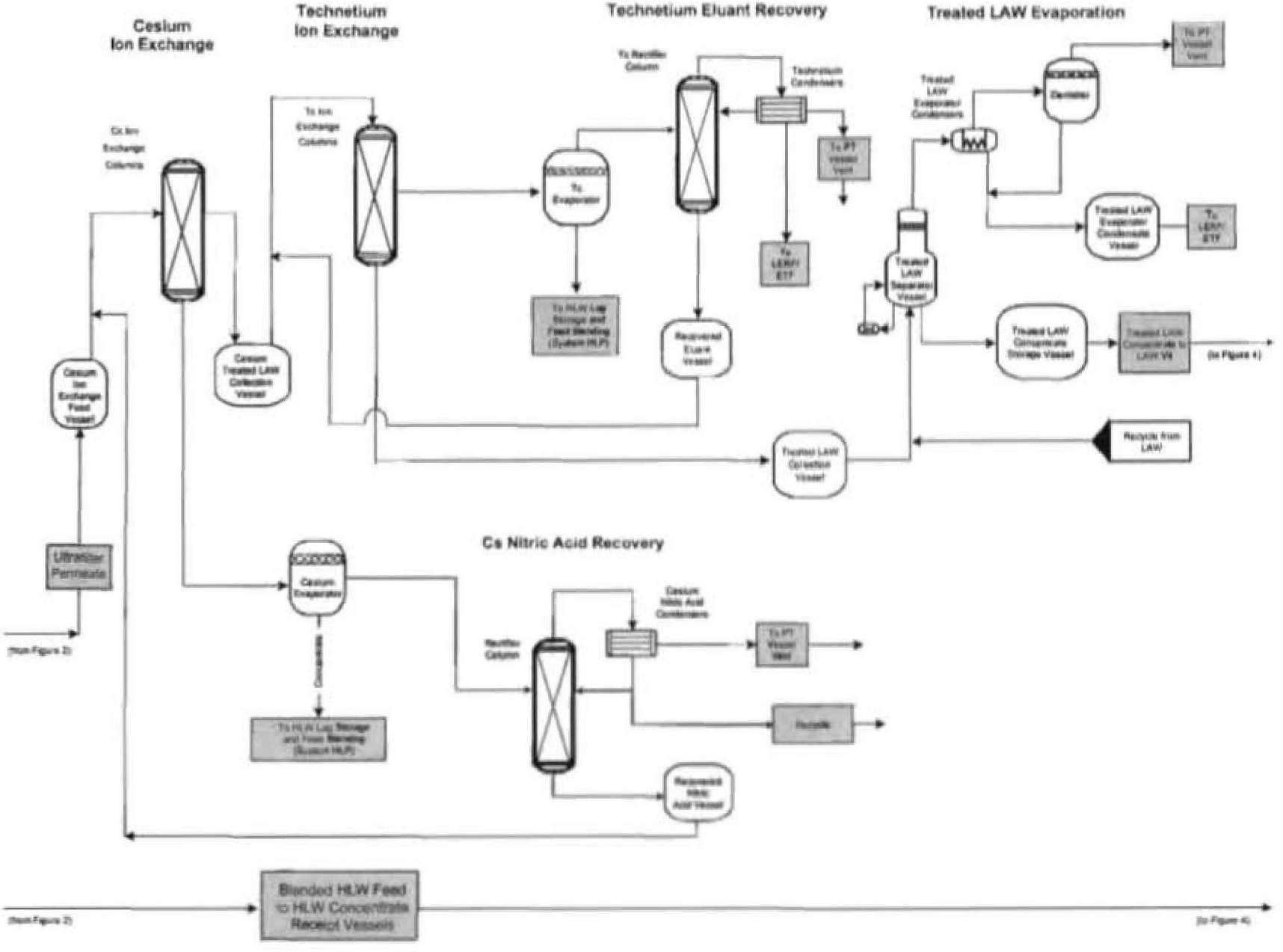

Figure 4 Simplified LAW Vitrification Process Flowsheet

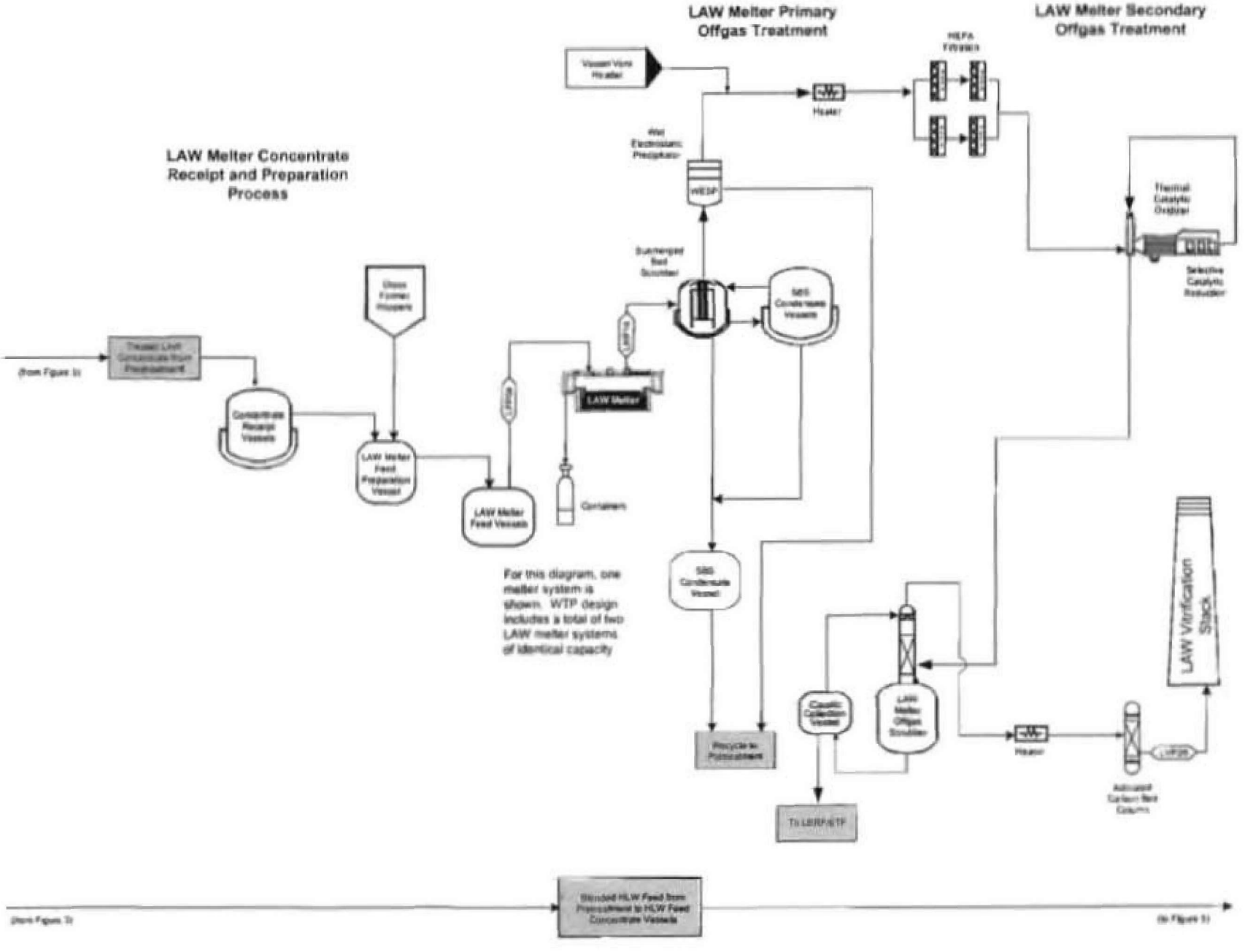

Figure 5 Simplified HLW Vitrification Process Flowsheet

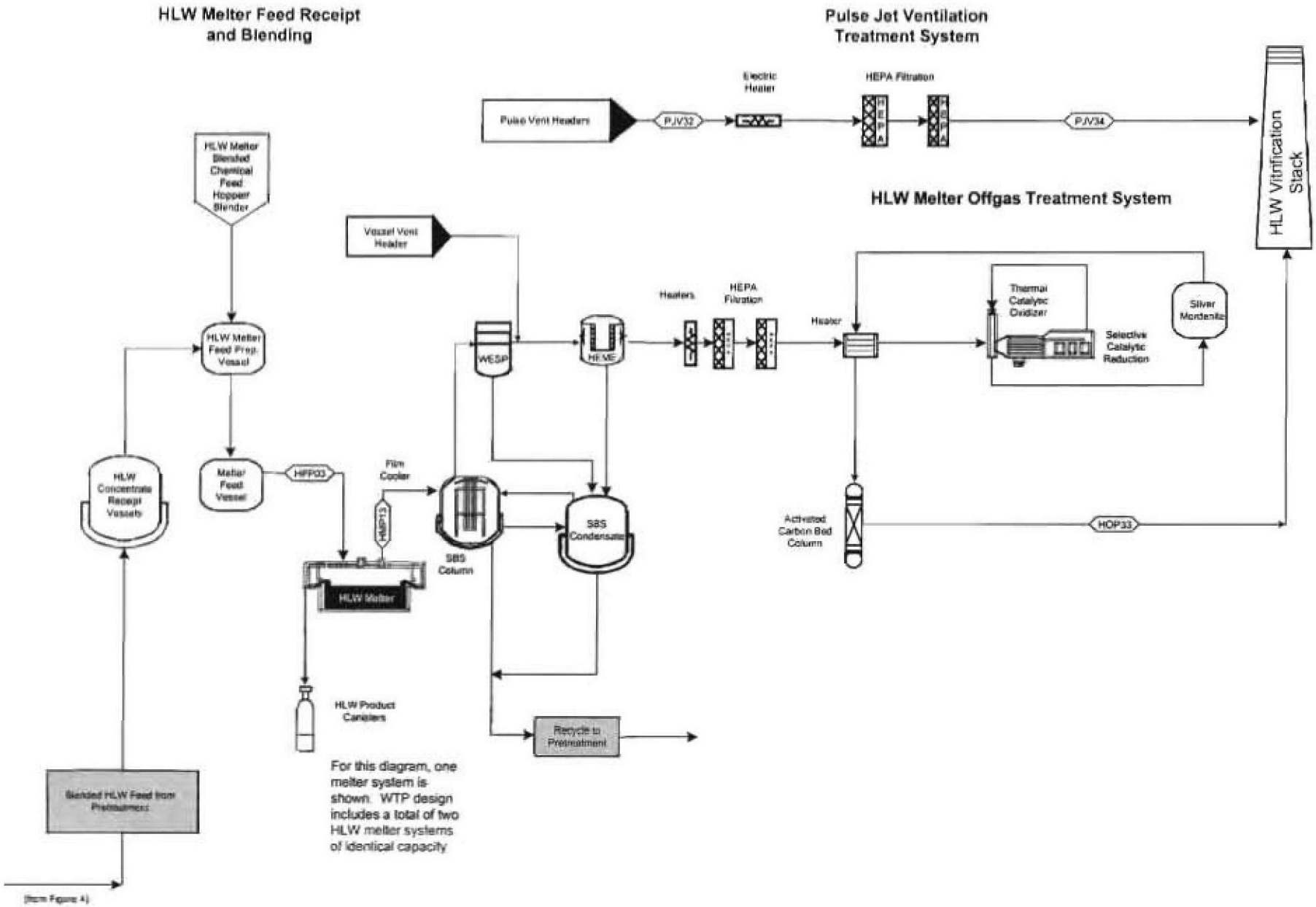

Figure 6 Emissions Estimate Objectives

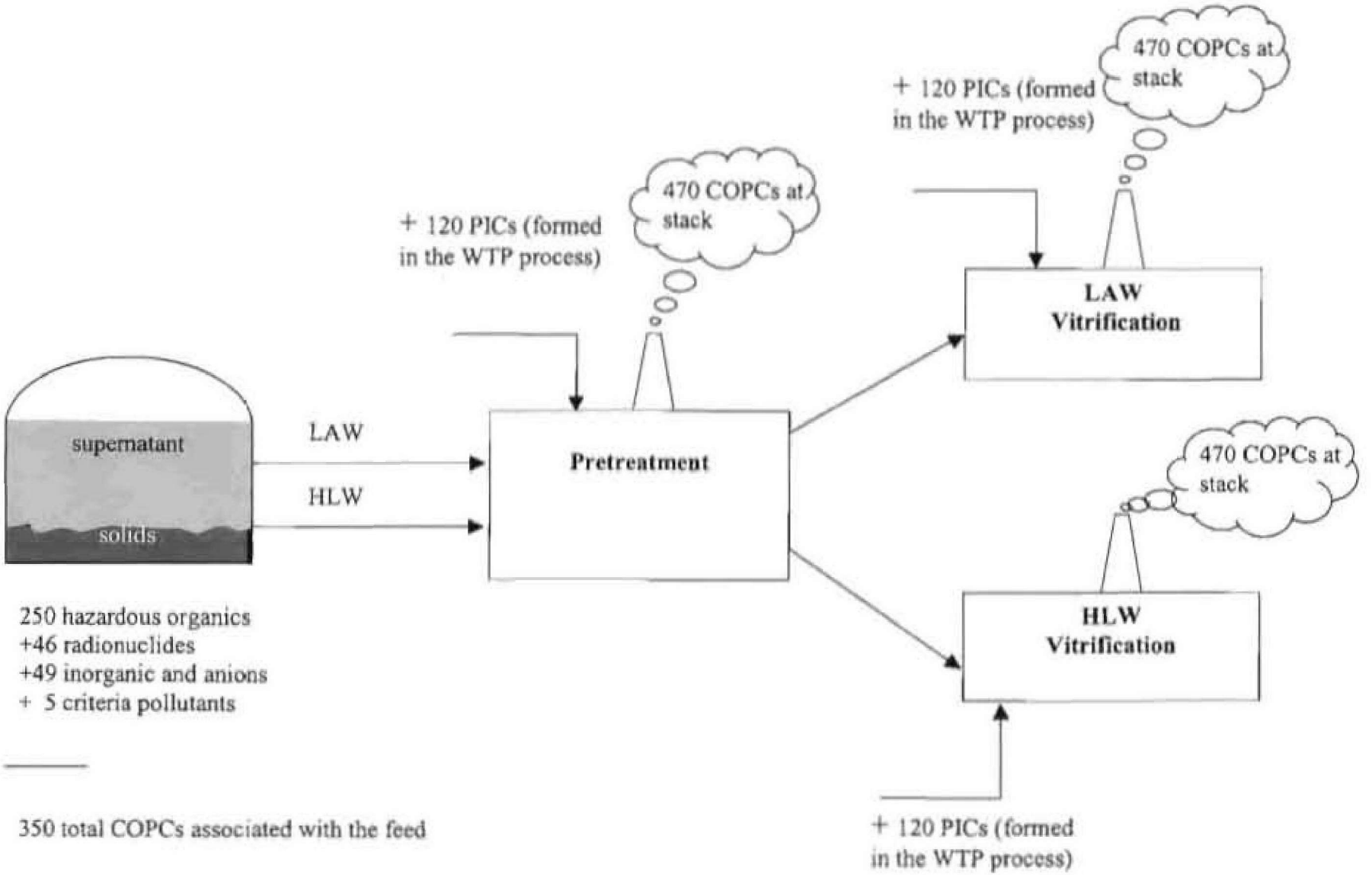

A

Appendix A
Selected Stream-Specific Reports from the Steady State Flowsheet Model

Appendix A contains stream-specific output from the steady state flowsheet model (SSFM) for unabated, abated, and feed points in the Hanford Tank Waste Treatment and Immobilization Plant (WTP) process. These stream-specific reports contain mass flow rate information for each of the inorganic, radionuclide, and organic constituents of potential concern (COPCs) included in the SSFM. Mass flow rates for COPCs not included directly in the SSFM are described in separate calculations. These calculations are included in Appendices B through E.

River Protection Project - Waste Treatment Plant

Stream Number: FRP14
Stream Name: Waste feed from DOE to HLW Feed Receipt
Run Data File: H:\Working Folder 11 (Vishal)\Emissions_Case2_Run4_SubEm\MRQ_03_054_run1_Streams.csv
Run Date / Time: 4/15/2003 - 6:40:10 AM

Stream Properties		
Variable	Value	Units
Density	1.40E+00	g/cm^3
Enthalpy	-2.57E+07	BTU/hr
Mass Flow	4.97E+03	Lb/hr
	1.19E+05	Lb/day
Volumetric Flow	6.51E+00	GPM
Molar Flow	2.03E+02	Lbmol/hr
Volumetric Flow	8.71E-01	ft^3/min
Molecular Weight	2.25E+01	Lb/Lbmol
Pressure	1.00E+03	mbar
Temperature	4.90E+01	C
Viscosity	1.28E+00	cP
Na Molarity	4.00E+00	mol/L
pH	1.48E-01	pH
Total TRU	3.64E-02	Ci/L
Total Activity	5.85E+00	Ci/L

Component	Aqueous Components mol/L	Lb/gal	Lb/day	Solid Components Lb/day	Total Component Lb/day	Solid Components mt/day	Total Component g/sec
Total	6.23E+01	1.17E+01	1.10E+05	8.38E+03	1.18E+05	53.64864013	620.9333349
Ag^+	4.83E-04	4.35E-04	4.08E+00	1.29E+01	1.70E+01	0.007740203	0.089585679
Al^{+3}	1.00E+00	2.25E-01	2.11E+03	3.29E+02	2.44E+03	1.109729644	12.8460931
As^{+3}	2.44E-03	1.93E-03	1.43E+01	2.77E+00	1.81E+01	0.008220997	0.095150424
B^{+3}	2.58E-02	2.33E-03	2.19E+01	3.06E+01	5.25E+01	0.023846189	0.275997561
Ba^{+2}	4.00E-04	4.58E-04	4.30E+00	1.06E+02	1.10E+02	0.050111708	0.579996625
Bi^{+3}	8.09E-04	1.41E-03	1.32E+01	6.59E+01	7.91E+01	0.035969283	0.416311146
$C_2O_4^{-2}$	1.03E+00	7.57E-01	7.10E+03	2.59E+02	7.36E+03	3.345108586	38.71653456
Ca^{+2}	1.60E-01	5.35E-02	5.02E+02	1.67E+02	6.69E+02	0.304089337	3.519552508
Cd^{+2}	1.60E-02	1.50E-02	1.41E+02	1.06E+02	2.47E+02	0.112148176	1.298011292
Ce^{+3}	1.21E-03	1.41E-03	1.32E+01	1.91E+01	3.23E+01	0.014682341	0.169934501
Cl^-	1.83E-01	5.43E-02	5.09E+02	7.76E+00	5.17E+02	0.234917812	2.71895616
CO_3^{-2}	6.18E-01	3.10E-01	2.90E+03	7.06E+02	3.61E+03	1.640957843	18.99248337
Cr^{+3}	8.00E-02	3.47E-02	3.26E+02	1.60E+01	3.42E+02	0.155282362	1.797249561
Cu^{+2}	8.84E-04	4.69E-04	4.40E+00	1.13E+01	1.57E+01	0.007139273	0.082630473
F^-	4.12E-01	6.54E-02	6.13E+02	8.24E+01	6.95E+02	0.316083725	3.65837645
Fe^{+2}	4.00E-02	1.86E-02	1.75E+02	6.83E+02	8.58E+02	0.390028704	4.514221108
H^+	0.00E+00	0.00E+00	0.00E+00		0.00E+00	0	0
H_2O	4.48E+01	6.74E+00	6.32E+04		6.32E+04	28.72915881	332.5134121
Hg^{+2}	5.60E-05	9.37E-05	8.79E-01	2.35E+00	3.23E+00	0.001469583	0.01700906
K^+	7.30E-01	2.35E-01	2.20E+03	3.06E+01	2.23E+03	1.015550922	11.7540616
La^{+3}	3.32E-04	3.85E-04	3.61E+00	6.12E+01	6.48E+01	0.029460681	0.340980099
Li^+	1.58E-02	9.16E-04	8.59E+00	3.32E+00	1.19E+01	0.005412403	0.062643552
Mg^{+2}	7.13E-03	1.45E-03	1.36E+01	4.94E+01	6.30E+01	0.02864116	0.331494911
Mn^{+2}	1.95E-02	8.93E-03	8.38E+01	1.53E+02	2.37E+02	0.107685054	1.246354787
MnO_4^-	0.00E+00	0.00E+00	0.00E+00		0.00E+00	0	0
Na^+	4.00E+00	7.67E-01	7.20E+03	4.47E+02	7.65E+03	3.475226795	40.22253235
NH_4^+	4.09E-02	6.15E-03	5.77E+01	0.00E+00	5.77E+01	0.02622164	0.303491205
Ni^{+2}	1.20E-02	5.88E-03	5.51E+01	5.65E+01	1.12E+02	0.050734576	0.587228885
NO_2^-	7.83E-01	3.01E-01	2.82E+03	1.36E+02	2.96E+03	1.34352847	15.55125544
NO_3^-	1.65E+00	8.53E-01	8.00E+03	8.47E+02	8.85E+03	4.022894274	46.56127632
O^{-2}				0.00E+00	0.00E+00	0	0
OH^-	6.19E+00	8.79E-01	8.24E+03	2.86E+03	1.11E+04	5.046797694	58.41201035
OH(b)	0.00E+00	0.00E+00	0.00E+00		0.00E+00	0	0
P^{+5}				0.00E+00	0.00E+00	0	0
Pb^{+2}	2.72E-03	4.70E-03	4.41E+01	2.59E+01	7.00E+01	0.03182098	0.368258379
Pd^{+2}	3.19E-05	2.83E-05	2.66E-01	3.06E+00	3.33E+00	0.001511881	0.017498616
PO_4^{-3}	2.68E-01	2.12E-01	1.99E+03	2.18E+02	2.21E+03	1.004334961	11.62424723
S^{-2}				0.00E+00	0.00E+00	0	0
Si^{+4}				4.47E+02	4.47E+02	0.203185511	2.351684151
SiO_4^{-4}	2.06E-02	1.58E-02	1.48E+02		1.48E+02	0.067336469	0.779357285
SO_4^{-2}	1.44E-01	1.16E-01	1.08E+03	3.12E+01	1.12E+03	0.507316191	5.871715175
Sr^{+2}	1.93E-04	1.41E-04	1.32E+00	1.22E+01	1.36E+01	0.006166552	0.071372135
Tl^{+3}	3.86E-04	1.54E-04	1.45E+00	3.06E+01	3.20E+01	0.014557811	0.168493178
Zn^{+2}	1.62E-03	8.84E-04	8.29E+00	9.88E+00	1.82E+01	0.008260836	0.095613531
Zr^{+2}	1.44E-03	1.09E-03	1.03E+01	3.53E+02	3.63E+02	0.165198702	1.912022011

Rad. Component	Aqueous Rad. Components			Solids Rad. Components (1)			Total Rad. Components (1)		
	Ci/L	Ci/day	Lb/day	Ci/L	Ci/day	Lb/day	Ci/L	Ci/day	Lb/day
Total	2.78016E-03	8.10E+04	1.62E+02	3.57E+00	1.27E+05	3.27E+02	5.85E+00	2.08E+05	4.89E+02
^{241}Am	3.73834E-05	1.33E+00	8.54E-04	2.71E-02	9.63E+02	6.18E-01	2.71E-02	9.62E+02	6.19E-01
^{14}C	2.86E-05	1.01E+00	5.01E-04	1.95E-06	6.94E-02	3.43E-05	3.05E-05	1.08E+00	5.35E-04
^{60}Co	4.00E-05	1.42E+00	2.77E-06	3.01E-03	1.07E+02	2.08E-04	3.05E-03	1.08E+02	2.11E-04
^{243}Cm	7.84E-09	2.78E-04	1.23E-08	9.52E-04	3.38E+01	1.40E-03	9.52E-04	3.38E+01	1.40E-03
^{244}Cm	4.08E-08	1.45E-03	3.95E-08	6.76E-04	2.40E+01	6.54E-04	6.76E-04	2.40E+01	6.54E-04
^{137}Cs	2.16E+00	7.68E+04	1.95E+02	4.51E-01	1.60E+04	4.07E-01	2.61E+00	9.28E+04	2.36E+00
^{152}Eu	1.41E-04	4.99E+00	6.34E-05	1.44E-04	5.12E+00	6.50E-05	2.85E-04	1.01E+01	1.28E-04
^{154}Eu	4.65E-04	1.65E+01	1.35E-04	1.56E-02	5.55E+02	4.53E-03	1.61E-02	5.72E+02	4.66E-03
^{155}Eu	8.02E-04	2.85E+01	7.29E-04	8.72E-03	3.10E+02	1.41E-03	9.52E-03	3.38E+02	1.53E-03
^{3}H	3.82E-04	1.36E+01	3.11E-06	1.95E-05	6.94E-01	1.59E-07	4.01E-04	1.43E+01	3.27E-06
^{129}I	3.11E-07	1.11E-02	1.38E-01	8.72E-08	3.10E-03	3.86E-02	3.98E-07	1.42E-02	1.77E-01
^{63}Ni	2.56E-04	9.10E+00	3.53E-04	1.42E-03	5.06E+01	1.96E-03	1.68E-03	5.96E+01	2.31E-03
^{237}Np	8.42E-08	2.99E-03	9.35E-03	2.23E-05	7.90E-01	2.47E+00	2.23E-05	7.93E-01	2.48E+00
^{238}Pu	2.22E-07	7.90E-03	1.02E-06	1.05E-04	3.74E+00	4.83E-04	1.05E-04	3.74E+00	4.82E-04
^{239}Pu	2.63E-06	9.35E-02	3.32E-03	9.32E-04	3.31E+01	1.18E+00	9.35E-04	3.32E+01	1.18E+00
^{240}Pu	4.66E-07	1.66E-02	1.61E-04	5.11E-05	1.81E+00	1.76E-01	5.15E-05	1.83E+00	1.78E-01
^{241}Pu	1.09E-05	3.89E-01	8.32E-06	6.62E-03	2.35E+02	5.03E-03	6.63E-03	2.35E+02	5.04E-03
^{125}Sb	2.15E-03	7.63E+01	1.62E-04	9.62E-03	3.42E+02	7.26E-04	1.18E-02	4.18E+02	8.88E-04
^{90}Sm	2.67E-02	9.48E+02	7.94E-02	3.01E-02	1.07E+03	8.95E-02	5.68E-02	2.02E+03	1.69E-01
^{126}Sn	1.62E-05	5.74E-01	1.11E-01	4.51E-05	1.60E+00	3.11E-01	6.13E-05	2.18E+00	4.22E-01
^{90}Sr	8.65E-02	3.07E+03	4.90E-02	3.01E+00	1.07E+05	1.70E+00	3.09E+00	1.10E+05	1.75E+00
^{99}Tc	7.68E-04	2.73E+01	3.55E+00	4.51E-03	1.60E+02	2.08E+01	5.28E-03	1.87E+02	2.44E+01
^{232}Th	5.99E-08	2.13E-03	4.26E+01	2.38E-07	8.38E-03	1.68E+02	2.98E-07	1.05E-02	2.10E+02
^{233}U	1.11E-06	3.95E-02	9.04E-03	2.71E-07	9.61E-03	2.20E-03	1.38E-06	4.91E-02	1.12E-02
^{234}U	6.47E-07	2.30E-02	8.16E-03	9.84E-07	3.49E-02	1.24E-02	1.63E-06	5.79E-02	2.06E-02
^{235}U	2.50E-08	8.87E-04	9.05E-01	7.52E-08	2.67E-03	2.72E+00	1.00E-07	3.56E-03	3.63E+00
^{236}U	7.49E-08	2.66E-03	9.06E-02	3.06E-08	1.09E-03	3.71E-02	1.06E-07	3.75E-03	1.28E-01
^{238}U	4.81E-07	1.71E-02	1.12E+02	5.53E-07	1.96E-02	1.29E+02	1.03E-06	3.67E-02	2.41E+02

Component (CAS)	Organic Components mol/L	Lb/gal	Lb/day	Mt/day	g/sec
Total	8.37E-03	1.00E-02	1.64E+02	0.07460556	0.863501849
57-14-7	1.41E-03	0.00071	6.63E+00	0.003015122	0.034898378
58-90-2	3.64E-04	0.00071	6.64E+00	0.003020052	0.034954309
58-89-9	1.03E-06	2.5E-06	2.34E-02	1.06588E-05	0.000123366
71-43-2	2.39E-04	0.00016	1.46E+00	0.000664259	0.007688178
75-05-8	6.48E-04	0.00022	2.08E+00	0.000946	0.010954865
75-44-8	4.82E-06	1.5E-05	1.41E-01	6.40138E-05	0.000741109
79-01-6	1.42E-04	0.00016	1.46E+00	0.000663921	0.00768427
84-74-2	3.05E-04	0.00071	6.65E+00	0.003020703	0.034961845
84-66-2	3.82E-04	0.00071	6.65E+00	0.003020774	0.034962661
87-86-5	3.18E-04	0.00071	6.63E+00	0.003013673	0.034880476
87-68-3	7.17E-05	0.00016	1.46E+00	0.000665262	0.007699792
88-85-7	3.53E-04	0.00071	6.64E+00	0.003017286	0.034922293
91-20-3	2.18E-05	2.3E-05	2.19E-01	9.94126E-05	0.001150609
98-86-2	7.04E-04	0.00071	6.64E+00	0.003018508	0.034936435
108-95-2	9.02E-04	0.00071	6.64E+00	0.003017124	0.034920419
108-88-3	2.03E-04	0.00016	1.46E+00	0.000665472	0.007702221
120-82-1	1.03E-04	0.00016	1.46E+00	0.000665045	0.007697275
122-66-7	0.00E+00	0	0.00E+00	0	0
122-39-4	1.11E-04	0.00016	1.47E+00	0.000668395	0.007736049
129-00-0	4.39E-04	0.00071	6.63E+00	0.003015183	0.034897954
132-64-9	5.04E-04	0.00071	6.64E+00	0.003016222	0.034909979
218-01-9	3.77E-04	0.00071	6.63E+00	0.003013522	0.034878779
309-00-2	2.74E-06	8.3E-06	7.83E-02	3.55798E-05	0.000411793
319-85-7	1.03E-06	2.5E-06	2.34E-02	1.06588E-05	0.000123366
534-52-1	0.00E+00	0	0.00E+00	0	0
603-34-9	3.46E-04	0.00071	6.64E+00	0.003020142	0.0349565
4170-30-3	2.67E-04	0.00016	1.46E+00	0.000665896	0.007707125
50061-01-5	1.69E-04	0.00016	1.47E+00	0.000667306	0.007723447
38380-08-4	9.99E-07	3E-06	2.82E-02	1.28283E-05	0.000148473
100-21-0	5.10E-04	0.00071	6.63E+00	0.003014747	0.034892505
106-93-4	4.51E-04	0.00071	6.63E+00	0.003015017	0.034896024
106-97-8	3.22E-04	0.00016	1.47E+00	0.000665942	0.007707664
106-99-0	3.46E-04	0.00016	1.47E+00	0.000665938	0.007707615
108-87-2	1.90E-04	0.00016	1.46E+00	0.000663811	0.007683001
110-54-3	2.17E-04	0.00016	1.46E+00	0.000665401	0.007701405
110-82-7	2.22E-04	0.00016	1.46E+00	0.000664808	0.007694541
111-84-2	1.46E-04	0.00016	1.47E+00	0.000666311	0.007711928
118-74-1	6.32E-06	2.5E-05	1.41E-01	6.40007E-05	0.000740749
120-12-7	4.76E-04	0.00071	6.64E+00	0.003018534	0.034936732
127-18-4	1.13E-04	0.00016	1.47E+00	0.000666848	0.007718143
1336-36-3	9.13E-05	0.00025	3.30E+00	0.012046066	0.012507251
144-62-7	9.44E-05	7.1E-05	6.65E-01	0.000301424	0.003500776
208-96-8	5.57E-04	0.00071	6.64E+00	0.003016692	0.034915419
50-32-8	4.36E-06	9.2E-06	8.61E-02	3.91414E-05	0.000453025
56-23-5	1.22E-04	0.00016	1.47E+00	0.000667824	0.007729439
60-35-5	1.17E-04	0.00016	1.47E+00	0.000666283	0.007711611
60-57-1	1.58E-06	5E-06	4.71E-02	2.14158E-05	0.000247868
67-75-9	2.14E-03	0.00132	1.24E+01	0.00564241	0.065305666
75-12-7	1.88E-03	0.00071	6.63E+00	0.003012929	0.03487186
76-15-3	1.21E-04	0.00016	1.46E+00	0.000665062	0.007697477
8001-35-2	1.69E-06	5.8E-06	5.48E-02	2.48954E-05	0.000288142
88-89-1	1.70E-04	0.00071	6.64E+00	0.003016327	0.03491119
126-73-8	3.18E-04	0.00071	6.63E+00	0.00301322	0.034875237

River Protection Project - Waste Treatment Plant

Stream Number:	FRP01
Stream Name:	Waste feed from DOE to LAW Feed Receipt
Run Data File:	H:\Working Folder 11 (Vishal)\Emissions_Case2_Run4_SubEm\MBQ_03_054_run1_Streams.csv
Run Date / Time:	4/15/2003 - 6:40:10 AM

Stream Properties		
Variable	Value	Units
Density	0.00E+00	g/cm^3
Enthalpy	0.00E+00	BTU/hr
Mass Flow	0.00E+00	Lb/hr
	0.00E+00	Lb/day
Volumetric Flow	0.00E+00	GPM
Molar Flow	0.00E+00	Lbmol/hr
Volumetric Flow	0.00E+00	ft^3/min
Molecular Weight	2.25E+01	Lb/Lbmol
Pressure	1.00E+03	mbar
Temperature	3.50E+01	C
Viscosity	1.87E+00	cP
Na Molarity	4.00E+00	mol/L
pH	0.00E+00	pH
Total TRU	0.00E+00	Ci/L
Total Activity	0.00E+00	Ci/L

Component	Aqueous Components mol/L	Lb/gal	Lb/day	Solid Components Lb/day	Total Component Lb/day	Solid Components mt/day	Total Component g/sec
Total	0.00E+00	0.00E+00	0.00E+00	0.00E+00	0.00E+00	0	0
Ag^+	0.00E+00	0.00E+00	0.00E+00	0.00E+00	0.00E+00	0	0
Al^{+3}	0.00E+00	0.00E+00	0.00E+00	0.00E+00	0.00E+00	0	0
AlO_2^{-1}	0.00E+00	0.00E+00	0.00E+00	0.00E+00	0.00E+00	0	0
B^{+3}	0.00E+00	0.00E+00	0.00E+00	0.00E+00	0.00E+00	0	0
Ba^{+2}	0.00E+00	0.00E+00	0.00E+00	0.00E+00	0.00E+00	0	0
Bi^{+3}	0.00E+00	0.00E+00	0.00E+00	0.00E+00	0.00E+00	0	0
$Cr_2O_4^{-2}$	0.00E+00	0.00E+00	0.00E+00	0.00E+00	0.00E+00	0	0
Ca^{+2}	0.00E+00	0.00E+00	0.00E+00	0.00E+00	0.00E+00	0	0
Cd^{+2}	0.00E+00	0.00E+00	0.00E+00	0.00E+00	0.00E+00	0	0
Ce^{+3}	0.00E+00	0.00E+00	0.00E+00	0.00E+00	0.00E+00	0	0
Cl^-	0.00E+00	0.00E+00	0.00E+00	0.00E+00	0.00E+00	0	0
CO_3^{-2}	0.00E+00	0.00E+00	0.00E+00	0.00E+00	0.00E+00	0	0
Cr^{+3}	0.00E+00	0.00E+00	0.00E+00	0.00E+00	0.00E+00	0	0
Cu^{+2}	0.00E+00	0.00E+00	0.00E+00	0.00E+00	0.00E+00	0	0
F^-	0.00E+00	0.00E+00	0.00E+00	0.00E+00	0.00E+00	0	0
Fe^{+3}	0.00E+00	0.00E+00	0.00E+00	0.00E+00	0.00E+00	0	0
H^+	0.00E+00	0.00E+00	0.00E+00		0.00E+00	0	0
H_2O	0.00E+00	0.00E+00	0.00E+00		0.00E+00	0	0
Hg^{+2}	0.00E+00	0.00E+00	0.00E+00	0.00E+00	0.00E+00	0	0
K^+	0.00E+00	0.00E+00	0.00E+00	0.00E+00	0.00E+00	0	0
La^{+3}	0.00E+00	0.00E+00	0.00E+00	0.00E+00	0.00E+00	0	0
Li^+	0.00E+00	0.00E+00	0.00E+00	0.00E+00	0.00E+00	0	0
Mg^{+2}	0.00E+00	0.00E+00	0.00E+00	0.00E+00	0.00E+00	0	0
Mn^{+2}	0.00E+00	0.00E+00	0.00E+00	0.00E+00	0.00E+00	0	0
MnO_4^-	0.00E+00	0.00E+00	0.00E+00		0.00E+00	0	0
Na^+	0.00E+00	0.00E+00	0.00E+00	0.00E+00	0.00E+00	0	0
NH_4^+	0.00E+00	0.00E+00	0.00E+00	0.00E+00	0.00E+00	0	0
Ni^{+2}	0.00E+00	0.00E+00	0.00E+00	0.00E+00	0.00E+00	0	0
NO_3^-	0.00E+00	0.00E+00	0.00E+00	0.00E+00	0.00E+00	0	0
NO_2^-	0.00E+00	0.00E+00	0.00E+00	0.00E+00	0.00E+00	0	0
O^{-2}				0.00E+00	0.00E+00	0	0
OH^-	0.00E+00	0.00E+00	0.00E+00	0.00E+00	0.00E+00	0	0
$OH(b)^-$	0.00E+00	0.00E+00	0.00E+00		0.00E+00	0	0
P^{+5}				0.00E+00	0.00E+00	0	0
Pb^{+2}	0.00E+00	0.00E+00	0.00E+00	0.00E+00	0.00E+00	0	0
Pd^{+2}	0.00E+00	0.00E+00	0.00E+00	0.00E+00	0.00E+00	0	0
PO_4^{-3}	0.00E+00	0.00E+00	0.00E+00	0.00E+00	0.00E+00	0	0
S^{+4}				0.00E+00	0.00E+00	0	0
Si^{+4}				0.00E+00	0.00E+00	0	0
SiO_3^{-2}	0.00E+00	0.00E+00	0.00E+00		0.00E+00	0	0
SiO_4^{-4}	0.00E+00	0.00E+00	0.00E+00	0.00E+00	0.00E+00	0	0
Sr^{+2}	0.00E+00	0.00E+00	0.00E+00	0.00E+00	0.00E+00	0	0
Ti^{+4}	0.00E+00	0.00E+00	0.00E+00	0.00E+00	0.00E+00	0	0
Zn^{+2}	0.00E+00	0.00E+00	0.00E+00	0.00E+00	0.00E+00	0	0
Zr^{+4}	0.00E+00	0.00E+00	0.00E+00	0.00E+00	0.00E+00	0	0

Rad. Component	Aqueous Rad. Components			Solids Rad. Components (1)			Total Rad. Components (1)		
	Ci/L	Ci/day	Lb/day	Ci/L	Ci/day	Lb/day	Ci/L	Ci/day	Lb/day
Total	0	0.00E+00	0.00E+00	0.00E+00	0.00E+00	0.00E+00	0.00E+00	0.00E+00	0.00E+00
^{241}Am	0	0.00E+00	0.00E+00	0.00E+00	0.00E+00	0.00E+00	0.00E+00	0.00E+00	0.00E+00
^{14}C	0.00E+00	0.00E+00	0.00E+00	0.00E+00	0.00E+00	0.00E+00	0.00E+00	0.00E+00	0.00E+00
^{60}Co	0.00E+00	0.00E+00	0.00E+00	0.00E+00	0.00E+00	0.00E+00	0.00E+00	0.00E+00	0.00E+00
^{242}Cm	0.00E+00	0.00E+00	0.00E+00	0.00E+00	0.00E+00	0.00E+00	0.00E+00	0.00E+00	0.00E+00
^{244}Cm	0.00E+00	0.00E+00	0.00E+00	0.00E+00	0.00E+00	0.00E+00	0.00E+00	0.00E+00	0.00E+00
^{137}Cs	0.00E+00	0.00E+00	0.00E+00	0.00E+00	0.00E+00	0.00E+00	0.00E+00	0.00E+00	0.00E+00
^{152}Eu	0.00E+00	0.00E+00	0.00E+00	0.00E+00	0.00E+00	0.00E+00	0.00E+00	0.00E+00	0.00E+00
^{154}Eu	0.00E+00	0.00E+00	0.00E+00	0.00E+00	0.00E+00	0.00E+00	0.00E+00	0.00E+00	0.00E+00
^{155}Eu	0.00E+00	0.00E+00	0.00E+00	0.00E+00	0.00E+00	0.00E+00	0.00E+00	0.00E+00	0.00E+00
^{3}H	0.00E+00	0.00E+00	0.00E+00	0.00E+00	0.00E+00	0.00E+00	0.00E+00	0.00E+00	0.00E+00
^{129}I	0.00E+00	0.00E+00	0.00E+00	0.00E+00	0.00E+00	0.00E+00	0.00E+00	0.00E+00	0.00E+00
^{93}Nb	0.00E+00	0.00E+00	0.00E+00	0.00E+00	0.00E+00	0.00E+00	0.00E+00	0.00E+00	0.00E+00
^{237}Np	0.00E+00	0.00E+00	0.00E+00	0.00E+00	0.00E+00	0.00E+00	0.00E+00	0.00E+00	0.00E+00
^{238}Pu	0.00E+00	0.00E+00	0.00E+00	0.00E+00	0.00E+00	0.00E+00	0.00E+00	0.00E+00	0.00E+00
^{239}Pu	0.00E+00	0.00E+00	0.00E+00	0.00E+00	0.00E+00	0.00E+00	0.00E+00	0.00E+00	0.00E+00
^{240}Pu	0.00E+00	0.00E+00	0.00E+00	0.00E+00	0.00E+00	0.00E+00	0.00E+00	0.00E+00	0.00E+00
^{241}Pu	0.00E+00	0.00E+00	0.00E+00	0.00E+00	0.00E+00	0.00E+00	0.00E+00	0.00E+00	0.00E+00
^{125}Sb	0.00E+00	0.00E+00	0.00E+00	0.00E+00	0.00E+00	0.00E+00	0.00E+00	0.00E+00	0.00E+00
^{151}Sm	0.00E+00	0.00E+00	0.00E+00	0.00E+00	0.00E+00	0.00E+00	0.00E+00	0.00E+00	0.00E+00
^{126}Sn	0.00E+00	0.00E+00	0.00E+00	0.00E+00	0.00E+00	0.00E+00	0.00E+00	0.00E+00	0.00E+00
^{90}Sr	0.00E+00	0.00E+00	0.00E+00	0.00E+00	0.00E+00	0.00E+00	0.00E+00	0.00E+00	0.00E+00
^{99}Tc	0.00E+00	0.00E+00	0.00E+00	0.00E+00	0.00E+00	0.00E+00	0.00E+00	0.00E+00	0.00E+00
^{232}Th	0.00E+00	0.00E+00	0.00E+00	0.00E+00	0.00E+00	0.00E+00	0.00E+00	0.00E+00	0.00E+00
^{233}U	0.00E+00	0.00E+00	0.00E+00	0.00E+00	0.00E+00	0.00E+00	0.00E+00	0.00E+00	0.00E+00
^{234}U	0.00E+00	0.00E+00	0.00E+00	0.00E+00	0.00E+00	0.00E+00	0.00E+00	0.00E+00	0.00E+00
^{235}U	0.00E+00	0.00E+00	0.00E+00	0.00E+00	0.00E+00	0.00E+00	0.00E+00	0.00E+00	0.00E+00
^{236}U	0.00E+00	0.00E+00	0.00E+00	0.00E+00	0.00E+00	0.00E+00	0.00E+00	0.00E+00	0.00E+00
^{238}U	0.00E+00	0.00E+00	0.00E+00	0.00E+00	0.00E+00	0.00E+00	0.00E+00	0.00E+00	0.00E+00

Component (CAS)	Organic Components mol/L	Lb/gal	Lb/day	Mt/day	g/sec
Total	0.00E+00	0.00E+00	0.00E+00	0	0
57-14-7	0.00E+00	0	0.00E+00	0	0
58-90-2	0.00E+00	0	0.00E+00	0	0
58-89-9	0.00E+00	0	0.00E+00	0	0
71-43-2	0.00E+00	0	0.00E+00	0	0
75-05-8	0.00E+00	0	0.00E+00	0	0
76-44-8	0.00E+00	0	0.00E+00	0	0
79-01-6	0.00E+00	0	0.00E+00	0	0
84-74-2	0.00E+00	0	0.00E+00	0	0
84-66-2	0.00E+00	0	0.00E+00	0	0
87-86-5	0.00E+00	0	0.00E+00	0	0
87-68-3	0.00E+00	0	0.00E+00	0	0
88-85-7	0.00E+00	0	0.00E+00	0	0
91-20-3	0.00E+00	0	0.00E+00	0	0
98-86-2	0.00E+00	0	0.00E+00	0	0
108-95-2	0.00E+00	0	0.00E+00	0	0
108-88-3	0.00E+00	0	0.00E+00	0	0
120-82-1	0.00E+00	0	0.00E+00	0	0
122-66-7	0.00E+00	0	0.00E+00	0	0
122-39-4	0.00E+00	0	0.00E+00	0	0
129-00-0	0.00E+00	0	0.00E+00	0	0
132-64-9	0.00E+00	0	0.00E+00	0	0
218-01-9	0.00E+00	0	0.00E+00	0	0
309-00-2	0.00E+00	0	0.00E+00	0	0
319-85-7	0.00E+00	0	0.00E+00	0	0
534-52-1	0.00E+00	0	0.00E+00	0	0
603-34-9	0.00E+00	0	0.00E+00	0	0
4170-30-3	0.00E+00	0	0.00E+00	0	0
10061-01-5	0.00E+00	0	0.00E+00	0	0
38380-08-4	0.00E+00	0	0.00E+00	0	0
100-21-0	0.00E+00	0	0.00E+00	0	0
106-93-4	0.00E+00	0	0.00E+00	0	0
106-97-8	0.00E+00	0	0.00E+00	0	0
106-99-0	0.00E+00	0	0.00E+00	0	0
108-87-2	0.00E+00	0	0.00E+00	0	0
110-54-3	0.00E+00	0	0.00E+00	0	0
110-82-7	0.00E+00	0	0.00E+00	0	0
111-84-2	0.00E+00	0	0.00E+00	0	0
118-74-1	0.00E+00	0	0.00E+00	0	0
120-12-7	0.00E+00	0	0.00E+00	0	0
127-18-4	0.00E+00	0	0.00E+00	0	0
1336-36-3	0.00E+00	0	0.00E+00	0	0
144-62-7	0.00E+00	0	0.00E+00	0	0
208-96-8	0.00E+00	0	0.00E+00	0	0
50-32-8	0.00E+00	0	0.00E+00	0	0
56-23-5	0.00E+00	0	0.00E+00	0	0
60-35-5	0.00E+00	0	0.00E+00	0	0
60-57-1	0.00E+00	0	0.00E+00	0	0
62-75-9	0.00E+00	0	0.00E+00	0	0
75-12-7	0.00E+00	0	0.00E+00	0	0
76-15-3	0.00E+00	0	0.00E+00	0	0
8001-35-2	0.00E+00	0	0.00E+00	0	0
88-89-1	0.00E+00	0	0.00E+00	0	0
126-73-8	0.00E+00	0	0.00E+00	0	0

River Protection Project - Waste Treatment Plant

Stream Number: PVP01
Stream Name: Pretreatment vessel vents feed to caustic scrubber
Run Data File: H:\Working Folder 11 (Vishal)\Emissions_Case2_Run4_SubEm\MRQ_03_054_run1_Streams.csv
Run Date / Time: 4/15/2003 - 6:40:10 AM

Stream Properties		
Variable	Value	Units
Density	1.13E-03	g/cm³
Enthalpy	-1.63E+06	BTU/hr
Mass Flow	1.13E+04	Lb/hr
	2.70E-05	Lb/day
Volumetric Flow	1.98E+04	GPM
Molar Flow	3.96E+02	Lbmol/hr
Volumetric Flow	2.65E+03	ft³/min
Molecular Weight	2.84E+01	Lb/Lbmol
Pressure	1.00E+03	mbar
Temperature	2.87E+01	C
Viscosity	1.84E-02	cP
Na Molarity	0.00E+00	mol/L
pH	N/A	pH
Total TRU	4.29E-11	Ci/L
Total Activity	1.26E-08	Ci/L

Gaseous Components (1)			
Component	mol/L	Lb/day	Mt/day
CO	2.16E-26	1.44E-19	6.54528E-23
CO_2	2.40E-07	2.52E+00	0.001143265
H_2O	1.59E-03	6.82E+03	3.098916416
NO	9.86E-32	7.05E-25	3.203554E-28
NO_2	4.73E-26	5.19E-19	2.357888E-22
N_2	3.03E-02	2.02E+05	91.765728837
O_2	8.04E-03	6.13E+04	27.85029459
SO_2	1.75E-28	2.66E-21	1.21113E-24
NH_3	7.48E-08	3.03E-01	0.000137852
HNO_3	1.67E-09	2.51E-02	1.14135E-05
HCl	1.63E-51	1.42E-44	6.45101E-48
HF	1.57E-33	7.50E-27	3.41023E-30

(1) All radionuclides in gaseous streams are assumed to exist as solid particulate.

Component	Aqueous Components mol/L	Lb/gal	Lb/day	Solid Components Lb/day	Total Component Lb/day	Solid Components mt/day	Total Component g/sec
Total	0.00E+00	0.00E+00	0.00E+00	7.69E-01	7.69E-01	0.000349522	0.004045407
Ag^+	0.00E+00	0.00E+00	0.00E+00	1.30E-04	1.30E-04	5.89875E-08	6.82726E-07
Al^{+3}	0.00E+00	0.00E+00	0.00E+00	2.69E-02	2.69E-02	1.22381E-05	0.000141644
As^{+3}	0.00E+00	0.00E+00	0.00E+00	3.40E-02	3.40E-02	1.54518E-05	0.00017884
B^{+3}	0.00E+00	0.00E+00	0.00E+00	9.72E-04	9.72E-04	4.4192E-07	5.11462E-06
Ba^{+2}	0.00E+00	0.00E+00	0.00E+00	6.49E-04	6.49E-04	2.95089E-07	3.41539E-06
Bi^{+3}	0.00E+00	0.00E+00	0.00E+00	3.58E-04	3.58E-04	1.62918E-07	1.88563E-06
CrO_4^{-2}	0.00E+00	0.00E+00	0.00E+00	6.60E-02	6.60E-02	3.00047E-05	0.000347277
Ca^{+2}	0.00E+00	0.00E+00	0.00E+00	9.21E-02	9.21E-02	4.18505E-05	0.00048438
Cd^{+2}	0.00E+00	0.00E+00	0.00E+00	1.81E-03	1.81E-03	8.20623E-07	9.49795E-06
Ce^{+3}	0.00E+00	0.00E+00	0.00E+00	5.76E-04	5.76E-04	2.61819E-07	3.03031E-06
Cl^-	0.00E+00	0.00E+00	0.00E+00	5.81E-03	5.81E-03	2.64213E-06	3.05802E-05
CO_3^{-2}	0.00E+00	0.00E+00	0.00E+00	5.53E-02	5.53E-02	2.51478E-05	0.000291062
Cr^{+3}	0.00E+00	0.00E+00	0.00E+00	3.15E-03	3.15E-03	1.43253E-06	1.65849E-05
Cu^{+2}	0.00E+00	0.00E+00	0.00E+00	1.23E-04	1.23E-04	5.59235E-08	6.47262E-07
F^-	0.00E+00	0.00E+00	0.00E+00	6.72E-03	6.72E-03	3.05323E-06	3.53383E-05
Fe^{+3}	0.00E+00	0.00E+00	0.00E+00	6.38E-03	6.38E-03	2.90203E-06	3.35883E-05
H^+	0.00E+00	0.00E+00	0.00E+00		0.00E+00	0	0
H_2O	0.00E+00	0.00E+00	0.00E+00		0.00E+00	0	0
Hg^{+2}	0.00E+00	0.00E+00	0.00E+00	2.65E-04	2.65E-04	1.20609E-07	1.39594E-06
K^+	0.00E+00	0.00E+00	0.00E+00	2.38E-02	2.38E-02	1.08041E-05	0.000125047
La^{+3}	0.00E+00	0.00E+00	0.00E+00	3.61E-04	3.61E-04	1.64133E-07	1.89969E-06
Li^+	0.00E+00	0.00E+00	0.00E+00	1.40E-04	1.40E-04	6.35704E-08	7.35771E-07
Mg^{+2}	0.00E+00	0.00E+00	0.00E+00	3.48E-03	3.48E-03	1.58244E-06	1.83155E-05
Mn^{+2}	0.00E+00	0.00E+00	0.00E+00	1.93E-03	1.93E-03	8.77447E-07	1.01558E-05
MnO_4^-	0.00E+00	0.00E+00	0.00E+00		0.00E+00	0	0
Na	0.00E+00	0.00E+00	0.00E+00	9.28E-02	9.28E-02	4.21632E-05	0.000488
NH_4^+	0.00E+00	0.00E+00	0.00E+00	0.00E+00	0.00E+00	0	0
Ni^{+2}	0.00E+00	0.00E+00	0.00E+00	7.35E-04	7.35E-04	3.34163E-07	3.86763E-06
NO_2^-	0.00E+00	0.00E+00	0.00E+00	2.74E-02	2.74E-02	1.24641E-05	0.000144216
NO_3^-	0.00E+00	0.00E+00	0.00E+00	1.46E-01	1.46E-01	6.6543E-05	0.000770174
O^{-2}				1.37E-02	1.37E-02	6.24709E-06	7.23043E-05
OH^-	0.00E+00	0.00E+00	0.00E+00	1.09E-01	1.09E-01	4.97714E-05	0.000576058
OH(b)	0.00E+00	0.00E+00	0.00E+00		0.00E+00	0	0
P^{+5}				1.22E-08	1.22E-08	5.53418E-12	6.40053E-11
Pb^{+2}	0.00E+00	0.00E+00	0.00E+00	5.10E-04	5.10E-04	2.31623E-07	2.68082E-06
Pd^{+2}	0.00E+00	0.00E+00	0.00E+00	1.34E-05	1.34E-05	6.10952E-09	7.07127E-08
PO_4^{-3}	0.00E+00	0.00E+00	0.00E+00	2.75E-02	2.75E-02	1.25029E-05	0.000144709
S^{-2}				2.73E-05	2.73E-05	1.24123E-08	1.43661E-07
Sr^{+2}				4.96E-03	4.96E-03	2.25504E-06	2.61003E-05
SiO_4^{-4}	0.00E+00	0.00E+00	0.00E+00		0.00E+00	0	0
SO_4^{-2}	0.00E+00	0.00E+00	0.00E+00	1.12E-02	1.12E-02	5.10494E-06	5.90849E-05
Sr^{+2}	0.00E+00	0.00E+00	0.00E+00	5.57E-05	5.57E-05	2.53085E-08	2.92923E-07
Ti^{+4}	0.00E+00	0.00E+00	0.00E+00	7.59E-04	7.59E-04	3.45051E-07	3.99365E-06
Zn^{+2}	0.00E+00	0.00E+00	0.00E+00	2.68E-04	2.68E-04	1.21763E-07	1.40939E-06
Zr^{+4}	0.00E+00	0.00E+00	0.00E+00	2.12E-03	2.12E-03	9.624E-07	1.11389E-05

Rad. Component	Aqueous Rad. Components			Solids Rad. Components (1)			Total Rad. Components (1)		
	Ci/L	Ci/day	Lb/day	Ci/L	Ci/day	Lb/day	Ci/L	Ci/day	Lb/day
Total	0.00E+00	0.00E+00	0.00E+00	1.26E-08	1.36E+00	3.83E-03	1.26E-08	1.36E+00	3.83E-03
^{241}Am	0	0.00E+00	0.00E+00	3.13E-11	3.38E-03	2.18E-06	3.13E-11	3.38E-03	2.18E-06
^{14}C	0.00E+00	0.00E+00	0.00E+00	1.28E-13	1.38E-05	6.81E-09	1.28E-13	1.38E-05	6.81E-09
^{60}Co	0.00E+00	0.00E+00	0.00E+00	5.15E-12	5.57E-04	1.08E-09	5.15E-12	5.57E-04	1.08E-09
^{243}Cm	0.00E+00	0.00E+00	0.00E+00	1.49E-12	1.61E-04	7.04E-09	1.49E-12	1.61E-04	7.04E-09
^{244}Cm	0.00E+00	0.00E+00	0.00E+00	1.12E-12	1.21E-04	3.30E-09	1.12E-12	1.21E-04	3.30E-09
^{137}Cs	0.00E+00	0.00E+00	0.00E+00	5.58E-09	6.03E-01	1.53E-05	5.58E-09	6.03E-01	1.53E-05
^{152}Eu	0.00E+00	0.00E+00	0.00E+00	6.04E-13	6.53E-05	8.28E-10	6.04E-13	6.53E-05	8.28E-10
^{154}Eu	0.00E+00	0.00E+00	0.00E+00	1.95E-11	2.10E-03	1.72E-08	1.95E-11	2.10E-03	1.72E-08
^{155}Eu	0.00E+00	0.00E+00	0.00E+00	1.25E-11	1.36E-03	6.15E-09	1.25E-11	1.36E-03	6.15E-09
^{3}H	0.00E+00	0.00E+00	0.00E+00	3.06E-09	3.30E-01	7.58E-08	3.06E-09	3.30E-01	7.58E-08
^{129}I	0.00E+00	0.00E+00	0.00E+00	2.02E-15	2.19E-07	2.73E-06	2.02E-15	2.19E-07	2.73E-06
^{93}Nb	0.00E+00	0.00E+00	0.00E+00	2.48E-12	2.68E-04	1.04E-08	2.48E-12	2.68E-04	1.04E-08
^{237}Np	0.00E+00	0.00E+00	0.00E+00	3.72E-14	4.02E-06	1.26E-05	3.72E-14	4.02E-06	1.26E-05
^{238}Pu	0.00E+00	0.00E+00	0.00E+00	1.22E-13	1.32E-05	1.70E-09	1.22E-13	1.32E-05	1.70E-09
^{239}Pu	0.00E+00	0.00E+00	0.00E+00	1.08E-12	1.17E-04	4.16E-06	1.08E-12	1.17E-04	4.16E-06
^{240}Pu	0.00E+00	0.00E+00	0.00E+00	6.03E-14	6.52E-06	6.33E-08	6.03E-14	6.52E-06	6.33E-08
^{241}Pu	0.00E+00	0.00E+00	0.00E+00	7.66E-12	8.27E-04	1.77E-08	7.66E-12	8.27E-04	1.77E-08
^{125}Sb	0.00E+00	0.00E+00	0.00E+00	1.79E-11	1.93E-03	4.10E-09	1.79E-11	1.93E-03	4.10E-09
^{151}Sm	0.00E+00	0.00E+00	0.00E+00	1.18E-10	1.27E-02	1.07E-06	1.18E-10	1.27E-02	1.07E-06
^{126}Sn	0.00E+00	0.00E+00	0.00E+00	1.02E-13	1.11E-05	2.15E-06	1.02E-13	1.11E-05	2.15E-06
^{90}Sr	0.00E+00	0.00E+00	0.00E+00	3.75E-09	4.05E-01	6.47E-06	3.75E-09	4.05E-01	6.47E-06
^{99}Tc	0.00E+00	0.00E+00	0.00E+00	1.42E-11	1.53E-03	1.99E-04	1.42E-11	1.53E-03	1.99E-04
^{232}Th	0.00E+00	0.00E+00	0.00E+00	6.52E-16	7.05E-08	1.41E-03	6.52E-16	7.05E-08	1.41E-03
^{233}U	0.00E+00	0.00E+00	0.00E+00	5.30E-15	5.73E-07	1.31E-07	5.30E-15	5.73E-07	1.31E-07
^{234}U	0.00E+00	0.00E+00	0.00E+00	4.45E-15	4.81E-07	1.71E-07	4.45E-15	4.81E-07	1.71E-07
^{235}U	0.00E+00	0.00E+00	0.00E+00	2.33E-16	2.52E-08	2.57E-05	2.33E-16	2.52E-08	2.57E-05
^{236}U	0.00E+00	0.00E+00	0.00E+00	3.78E-16	4.08E-08	1.39E-06	3.78E-16	4.08E-08	1.39E-06
^{238}U	0.00E+00	0.00E+00	0.00E+00	3.02E-15	3.26E-07	2.14E-03	3.02E-15	3.26E-07	2.14E-03

Component (CAS)	Organic Components mol/L	Lb/gal	Lb/day	Mt/day	g/sec
Total	6.87E-07	7.18E-07	5.94E+01	0.027014765	0.312670887
57-14-7	6.50E-08	3.26717E-08	9.31E-01	0.000423276	0.004899027
58-90-2	1.25E-08	2.42289E-08	6.92E-01	0.000314377	0.003638628
58-89-9	2.40E-11	5.81876E-11	1.66E-03	7.55002E-07	8.73844E-06
71-43-2	7.85E-08	5.1186E-08	1.46E+00	0.000664153	0.007686962
75-05-8	7.00E-08	2.39472E-08	6.85E-01	0.000311241	0.003602328
76-44-8	1.44E-09	4.47363E-09	1.28E-01	5.80466E-05	0.000671836
79-01-6	4.67E-08	5.1166E-08	1.46E+00	0.000663894	0.007683954
84-74-2	3.07E-09	7.14178E-09	2.04E-01	9.26668E-05	0.001072532
84-66-2	1.42E-09	2.642E-09	7.54E-02	3.42808E-05	0.000396769
87-86-5	6.43E-11	1.42965E-10	4.08E-03	1.85502E-06	2.14701E-05
87-68-3	2.36E-08	5.12695E-08	1.46E+00	0.000665237	0.007699507
88-85-7	1.36E-09	2.7176E-09	7.76E-02	3.52617E-05	0.000408121
91-20-3	6.82E-09	7.29335E-09	2.08E-01	9.46334E-05	0.001095294
98-86-2	2.77E-08	2.78467E-08	7.95E-01	0.000361319	0.004181929
108-95-2	2.05E-09	1.60707E-09	4.59E-02	2.08522E-05	0.000241345
108-88-3	6.67E-08	5.12824E-08	1.46E+00	0.000665405	0.007701446
120-82-1	3.37E-08	5.30239E-08	1.46E+00	0.000662038	0.007662477
122-66-7	0.00E+00	0	0.00E+00	0	0
122-39-4	1.66E-09	2.33936E-09	6.68E-02	3.03539E-05	0.000351318
129-00-0	2.30E-08	3.56211E-08	1.01E+00	0.0004596	0.005319444
132-64-9	1.41E-07	1.97889E-07	5.65E+00	0.002567666	0.029718351
218-01-9	8.92E-09	1.69946E-08	4.85E-01	0.000220551	0.002552196
309-00-2	4.59E-10	1.39646E-09	3.99E-02	1.81394E-05	0.000209716
319-85-7	3.35E-12	8.12988E-12	2.32E-04	1.05488E-07	1.22092E-06
534-52-1	0.00E+00	0	0.00E+00	0	0
603-34-9	7.72E-09	1.57976E-08	4.51E-01	0.000204978	0.002372436
4170-30-3	9.90E-09	5.79024E-09	1.65E-01	7.51301E-05	0.000869562
10061-01-5	5.55E-08	5.13791E-08	1.47E+00	0.000666659	0.007715964
38380-08-4	2.58E-11	7.75674E-11	2.21E-03	1.00646E-06	1.16488E-05
100-21-0	1.46E-13	2.02784E-13	5.79E-06	2.63118E-09	3.04535E-08
106-93-4	1.45E-07	2.23177E-07	6.48E+00	0.002947695	0.034116845
106-97-8	1.06E-07	5.13233E-08	1.47E+00	0.000665936	0.007707587
106-99-0	1.14E-07	5.1323E-08	1.47E+00	0.000665931	0.007707537
108-87-2	6.24E-08	5.11591E-08	1.46E+00	0.000663805	0.007682924
110-54-3	7.13E-08	5.12816E-08	1.46E+00	0.000665395	0.007701328
110-82-7	7.29E-08	5.12359E-08	1.46E+00	0.000664803	0.007694464
111-84-2	4.80E-08	5.13517E-08	1.47E+00	0.000666304	0.007711851
118-74-1	2.07E-09	4.91768E-09	1.40E-01	6.38084E-05	0.000738523
120-12-7	7.27E-08	1.06199E-07	3.09E+00	0.001403865	0.016248441
127-18-4	3.73E-08	5.13428E-08	1.47E+00	0.000666837	0.007718021
1336-36-3	1.45E-07	3.89316E-07	1.11E+01	0.005051489	0.058466306
144-62-7	1.40E-13	1.0539E-13	3.01E-06	1.36617E-09	1.58122E-08
208-96-8	1.26E-07	1.65426E-07	4.59E+00	0.002084173	0.024122374
50-32-8	1.48E-11	3.30783E-11	8.87E-04	4.0325E-07	4.66724E-06
56-23-5	4.01E-08	5.14682E-08	1.47E+00	0.000667816	0.007727535
60-35-5	2.96E-11	1.45745E-11	4.16E-04	1.89109E-07	2.18874E-06
60-57-1	6.65E-11	2.11462E-10	6.04E-03	2.74378E-06	3.17567E-05
62-75-9	1.91E-08	1.17883E-08	3.37E-01	0.000152956	0.001770326
75-12-7	3.25E-11	8.46011E-12	2.41E-04	1.09772E-07	1.27051E-06
76-15-3	3.98E-08	5.12555E-08	1.46E+00	0.000665055	0.0076974
8001-35-2	4.51E-11	1.55781E-10	4.45E-03	2.0213E-06	2.33947E-05
68-89-1	2.58E-13	4.55733E-13	1.30E-05	5.91327E-09	6.84407E-08
126-73-8	3.61E-10	8.01694E-10	2.29E-02	1.04022E-05	0.000120396

River Protection Project - Waste Treatment Plant

Stream Number: PJV04
Stream Name: Vapor feed to demister
Run Data File: H:\Working Folder 11 (Vishal)\Emissions_Case2_Run4_SubEm\MRQ_03_054_run1_Streams.csv
Run Date / Time: 4/15/2003 - 6:40:10 AM

Stream Properties Variable	Value	Units
Density	1.16E-03	g/cm³
Enthalpy	-7.83E+06	BTU/hr
Mass Flow	1.52E+05	Lb/hr
	3.65E+06	Lb/day
Volumetric Flow	2.62E+05	GPM
Molar Flow	5.30E+03	Lbmol/hr
Volumetric Flow	3.50E+04	ft³/min
Molecular Weight	2.87E+01	Lb/Lbmol
Pressure	1.00E+03	mbar
Temperature	2.50E+01	C
Viscosity	1.83E-02	cP
Na Molarity	0.00E+00	mol/L
pH	N/A	pH
Total TRU	5.47E-11	Ci/L
Total Activity	1.03E-08	Ci/L

Gaseous Components (1) Component	mol/L	Lb/day	Mt/day
CO	1.20E-27	1.05E-19	4.79109E-23
CO_2	5.28E-13	7.31E-05	3.32582E-08
H_2O	5.72E-04	3.25E+04	14.75494908
NO	1.16E-32	1.10E-24	4.98135E-28
NO_2	3.35E-34	4.85E-26	2.20602E-29
N_2	3.14E-02	2.77E+06	1260.313993
O_2	8.36E-03	8.42E+05	382.6816086
SO_2	4.25E-33	8.58E-25	3.89794E-28
NH_3	4.68E-11	2.51E-03	1.14081E-06
HNO_3	2.30E-11	4.57E-03	2.0767E-06
HCl	1.17E-44	1.34E-36	6.10866E-40
HF	2.53E-83	1.60E-75	7.25621E-79

(1) All radionuclides in gaseous streams are assumed to exist as solid particulate.

Component	Aqueous Components mol/L	Lb/gal	Lb/day	Solid Components Lb/day	Total Component Lb/day	Solid Components mt/day	Total Component g/sec
Total	0.00E+00	0.00E+00	0.00E+00	5.96E+00	5.96E+00	0.002710904	0.03137157
Ag^+	0.00E+00	0.00E+00	0.00E+00	1.19E-03	1.19E-03	5.41028E-07	6.2618E-06
Al^{+3}	0.00E+00	0.00E+00	0.00E+00	2.17E-01	2.17E-01	9.86675E-05	0.00114198
As^{+3}	0.00E+00	0.00E+00	0.00E+00	4.63E-01	4.63E-01	0.000210383	0.002434986
B^{+3}	0.00E+00	0.00E+00	0.00E+00	7.11E-03	7.11E-03	3.23396E-06	3.74301E-05
Ba^{+2}	0.00E+00	0.00E+00	0.00E+00	6.83E-03	6.83E-03	3.10419E-06	3.59281E-05
Bi^{+3}	0.00E+00	0.00E+00	0.00E+00	5.23E-03	5.23E-03	2.37877E-06	2.75321E-05
CrO_4^{-2}	0.00E+00	0.00E+00	0.00E+00	6.32E-01	6.32E-01	0.000287319	0.003325449
Ca^{+2}	0.00E+00	0.00E+00	0.00E+00	5.81E-02	5.81E-02	2.64153E-05	0.000305733
Cd^{+2}	0.00E+00	0.00E+00	0.00E+00	2.07E-02	2.07E-02	9.3864E-06	0.000108639
Ce^{+3}	0.00E+00	0.00E+00	0.00E+00	4.79E-03	4.79E-03	2.17732E-06	2.52004E-05
Cl^-	0.00E+00	0.00E+00	0.00E+00	5.16E-02	5.16E-02	2.34656E-05	0.000271593
CO_3^{-2}	0.00E+00	0.00E+00	0.00E+00	3.12E-01	3.12E-01	0.000141932	0.00164273
Cr^{+3}	0.00E+00	0.00E+00	0.00E+00	3.14E-02	3.14E-02	1.42677E-05	0.000165135
Cu^{+2}	0.00E+00	0.00E+00	0.00E+00	1.09E-03	1.09E-03	4.96037E-07	5.74117E-06
F^-	0.00E+00	0.00E+00	0.00E+00	6.86E-02	6.86E-02	3.11823E-05	0.000360906
Fe^{+3}	0.00E+00	0.00E+00	0.00E+00	5.81E-02	5.81E-02	2.64126E-05	0.000305702
H^+	0.00E+00	0.00E+00	0.00E+00		0.00E+00	0	0
H_2O	0.00E+00	0.00E+00	0.00E+00		0.00E+00	0	0
Hg^{+2}	0.00E+00	0.00E+00	0.00E+00	3.66E-03	3.66E-03	1.66389E-06	1.92441E-05
K^+	0.00E+00	0.00E+00	0.00E+00	2.10E-01	2.10E-01	9.54319E-05	0.001104536
La^{+3}	0.00E+00	0.00E+00	0.00E+00	4.10E-03	4.10E-03	1.86138E-06	2.15437E-05
Li^+	0.00E+00	0.00E+00	0.00E+00	1.48E-03	1.48E-03	6.74453E-07	7.80617E-06
Mg^{+2}	0.00E+00	0.00E+00	0.00E+00	4.40E-03	4.40E-03	1.99915E-06	2.31383E-05
Mn^{+2}	0.00E+00	0.00E+00	0.00E+00	1.71E-02	1.71E-02	7.79026E-06	9.01651E-05
MnO_4^-	0.00E+00	0.00E+00	0.00E+00		0.00E+00	0	0
Na^+	0.00E+00	0.00E+00	0.00E+00	7.46E-01	7.46E-01	0.000339074	0.003924468
NH_4^+	0.00E+00	0.00E+00	0.00E+00	0.00E+00	0.00E+00	0	0
Ni^{+2}	0.00E+00	0.00E+00	0.00E+00	8.61E-03	8.61E-03	3.91324E-06	4.52971E-05
NO_2^-	0.00E+00	0.00E+00	0.00E+00	2.70E-01	2.70E-01	0.000122849	0.001421868
NO_3^-	0.00E+00	0.00E+00	0.00E+00	1.42E+00	1.42E+00	0.000647567	0.00749499
Cl^-				1.64E-01	1.64E-01	7.46284E-05	0.000863755
OH^-	0.00E+00	0.00E+00	0.00E+00	7.99E-01	7.99E-01	0.000363358	0.004205533
$OH(b)^-$	0.00E+00	0.00E+00	0.00E+00		0.00E+00	0	0
P^{+5}				5.39E-10	5.39E-10	2.44951E-13	2.83504E-12
Pb^{+2}	0.00E+00	0.00E+00	0.00E+00	5.67E-03	5.67E-03	2.57663E-06	2.98219E-05
Pd^{+2}	0.00E+00	0.00E+00	0.00E+00	2.09E-04	2.09E-04	9.5195E-08	1.10179E-06
PO_4^{-3}	0.00E+00	0.00E+00	0.00E+00	1.98E-01	1.98E-01	9.00342E-05	0.001042063
S^{-2}				1.64E-09	1.64E-09	7.43287E-13	8.60286E-12
Sb^{+3}				3.32E-02	3.32E-02	1.50745E-05	0.000174473
SiO_4^{-4}	0.00E+00	0.00E+00	0.00E+00		0.00E+00	0	0
SO_4^{-2}	0.00E+00	0.00E+00	0.00E+00	1.03E-01	1.03E-01	4.66899E-05	0.000540161
Sr^{+2}	0.00E+00	0.00E+00	0.00E+00	8.67E-04	8.67E-04	3.93912E-07	4.55917E-06
Ti^{+4}	0.00E+00	0.00E+00	0.00E+00	5.26E-03	5.26E-03	2.39152E-06	2.76796E-05
Zn^{+2}	0.00E+00	0.00E+00	0.00E+00	2.03E-03	2.03E-03	9.22881E-07	1.06815E-05
Zr^{+4}	0.00E+00	0.00E+00	0.00E+00	2.24E-02	2.24E-02	1.01723E-05	0.000117744

Rad. Component	Aqueous Rad. Components			Solids Rad. Components (1)			Total Rad. Components (1)		
	Ci/L	Ci/day	Lb/day	Ci/L	Ci/day	Lb/day	Ci/L	Ci/day	Lb/day
Total	0.00E+00	0.00E+00	0.00E+00	1.03E-08	1.47E-01	3.56E-02	1.03E-08	1.47E-01	3.56E-02
^{241}Am	0	0.00E+00	0.00E+00	4.07E-11	5.81E-03	3.74E-05	4.07E-11	5.81E-02	3.74E-05
^{14}C	0.00E+00	0.00E+00	0.00E+00	6.89E-14	9.84E-05	4.86E-08	6.89E-14	9.84E-05	4.86E-08
^{60}Co	0.00E+00	0.00E+00	0.00E+00	4.60E-12	6.57E-03	1.28E-08	4.60E-12	6.57E-03	1.28E-08
^{243}Cm	0.00E+00	0.00E+00	0.00E+00	1.35E-12	1.93E-03	8.43E-08	1.35E-12	1.93E-03	8.43E-08
^{244}Cm	0.00E+00	0.00E+00	0.00E+00	1.01E-12	1.45E-03	3.95E-08	1.01E-12	1.45E-03	3.95E-08
^{137}Cs	0.00E+00	0.00E+00	0.00E+00	5.34E-09	7.62E+00	1.94E-04	5.34E-09	7.62E+00	1.94E-04
^{152}Eu	0.00E+00	0.00E+00	0.00E+00	5.42E-13	7.74E-04	9.82E-09	5.42E-13	7.74E-04	9.82E-09
^{154}Eu	0.00E+00	0.00E+00	0.00E+00	2.45E-11	3.50E-02	2.86E-07	2.45E-11	3.50E-02	2.86E-07
^{155}Eu	0.00E+00	0.00E+00	0.00E+00	1.49E-11	2.13E-02	9.68E-08	1.49E-11	2.13E-02	9.68E-08
^{3}H	0.00E+00	0.00E+00	0.00E+00	5.81E-13	8.30E-04	1.90E-10	5.81E-13	8.30E-04	1.90E-10
^{129}I	0.00E+00	0.00E+00	0.00E+00	9.09E-16	1.30E-06	1.62E-05	9.09E-16	1.30E-06	1.62E-05
^{63}Ni	0.00E+00	0.00E+00	0.00E+00	2.75E-12	3.92E-03	1.52E-07	2.75E-12	3.92E-03	1.52E-07
^{237}Np	0.00E+00	0.00E+00	0.00E+00	3.36E-14	4.79E-05	1.50E-04	3.36E-14	4.79E-05	1.50E-04
^{238}Pu	0.00E+00	0.00E+00	0.00E+00	1.58E-13	2.26E-04	2.91E-08	1.58E-13	2.26E-04	2.91E-08
^{239}Pu	0.00E+00	0.00E+00	0.00E+00	1.40E-12	2.01E-03	7.13E-05	1.40E-12	2.01E-03	7.13E-05
^{240}Pu	0.00E+00	0.00E+00	0.00E+00	7.77E-14	1.11E-04	1.08E-06	7.77E-14	1.11E-04	1.08E-06
^{241}Pu	0.00E+00	0.00E+00	0.00E+00	9.95E-12	1.42E-02	3.04E-07	9.95E-12	1.42E-02	3.04E-07
^{125}Sb	0.00E+00	0.00E+00	0.00E+00	1.95E-11	2.79E-02	5.92E-08	1.95E-11	2.79E-02	5.92E-08
^{151}Sm	0.00E+00	0.00E+00	0.00E+00	1.07E-10	1.53E-01	1.28E-05	1.07E-10	1.53E-01	1.28E-05
^{126}Sn	0.00E+00	0.00E+00	0.00E+00	1.05E-13	1.50E-04	2.91E-05	1.05E-13	1.50E-04	2.91E-05
^{90}Sr	0.00E+00	0.00E+00	0.00E+00	4.74E-09	6.77E+00	1.08E-04	4.74E-09	6.77E+00	1.08E-04
^{99}Tc	0.00E+00	0.00E+00	0.00E+00	1.29E-11	1.84E-02	2.40E-03	1.29E-11	1.84E-02	2.40E-03
^{232}Th	0.00E+00	0.00E+00	0.00E+00	4.92E-16	7.03E-07	1.41E-02	4.92E-16	7.03E-07	1.41E-02
^{233}U	0.00E+00	0.00E+00	0.00E+00	2.98E-15	4.25E-06	9.73E-07	2.98E-15	4.25E-06	9.73E-07
^{234}U	0.00E+00	0.00E+00	0.00E+00	2.97E-15	4.24E-06	1.51E-06	2.97E-15	4.24E-06	1.51E-06
^{235}U	0.00E+00	0.00E+00	0.00E+00	1.71E-16	2.44E-07	2.49E-04	1.71E-16	2.44E-07	2.49E-04
^{236}U	0.00E+00	0.00E+00	0.00E+00	2.19E-16	3.13E-07	1.07E-05	2.19E-16	3.13E-07	1.07E-05
^{238}U	0.00E+00	0.00E+00	0.00E+00	1.94E-15	2.78E-06	1.82E-02	1.94E-15	2.78E-06	1.82E-02

Component (CAS)	Organic Components				
	mol/L	Lb/gal	Lb/day	Mt/day	g/sec
Total	7.94E-12	1.07E-11	8.54E-03	3.87965E-06	4.49033E-05
57-14-7	1.05E-12	5.28316E-13	1.99E-04	9.06058E-08	1.04868E-06
58-90-2	2.86E-13	5.53412E-13	2.09E-04	9.49098E-08	1.09849E-06
58-89-9	1.08E-15	2.63158E-15	9.93E-07	4.51313E-10	5.22353E-09
71-43-2	6.07E-14	3.9563E-14	1.49E-05	6.78502E-09	7.85303E-08
75-05-8	4.12E-13	1.41031E-13	5.32E-05	2.41868E-08	2.7994E-07
76-44-8	1.66E-15	5.18252E-15	1.96E-06	8.88798E-10	1.0287E-08
79-01-6	3.57E-14	3.91873E-14	1.48E-05	6.72059E-09	7.77846E-08
84-74-2	4.09E-13	9.50805E-13	3.59E-04	1.6301E-07	1.8867E-06
84-66-2	5.22E-13	9.67668E-13	3.65E-04	1.65954E-07	1.92077E-06
87-68-3	6.40E-13	1.42297E-12	5.37E-04	2.44039E-07	2.82452E-06
87-68-3	1.80E-14	3.92433E-14	1.48E-05	6.77102E-09	7.78958E-08
88-85-7	8.05E-13	1.61406E-12	6.09E-04	2.7681E-07	3.20381E-06
91-20-3	6.85E-15	7.32591E-15	2.76E-06	1.25639E-09	1.45415E-08
95-94-3	0.00E+00	0	0.00E+00	0	0
98-86-2	5.39E-13	5.41557E-13	2.04E-04	9.28789E-08	1.07499E-06
108-95-2	1.42E-12	1.11134E-12	4.20E-04	1.90937E-07	2.20992E-06
108-88-3	5.14E-14	3.94995E-14	1.49E-05	6.77413E-09	7.84043E-08
120-82-1	2.77E-14	4.39707E-14	1.58E-05	7.19794E-09	8.33095E-08
122-66-7	0.00E+00	0	0.00E+00	0	0
122-39-4	1.00E-13	1.41879E-13	5.35E-05	2.43329E-08	2.81622E-07
129-00-0	4.20E-13	7.09312E-13	2.68E-04	1.21647E-07	1.40795E-06
132-64-9	1.90E-13	2.67255E-13	1.01E-04	4.5834E-08	5.30486E-07
218-01-9	3.99E-13	7.60867E-13	2.87E-04	1.30488E-07	1.51028E-06
309-00-2	2.84E-15	8.64963E-15	3.26E-06	1.4834E-09	1.7169E-08
319-85-7	1.95E-15	4.72742E-15	1.78E-06	8.10749E-10	9.38367E-09
534-52-1	0.00E+00	0	0.00E+00	0	0
603-34-9	2.90E-13	5.92935E-13	2.24E-04	1.01688E-07	1.17694E-06
4170-30-3	2.06E-13	1.30594E-13	4.55E-05	2.06819E-08	2.39373E-07
10061-01-5	4.38E-14	4.05993E-14	1.53E-05	6.96279E-09	8.05674E-08
38380-08-4	1.64E-15	3.12843E-15	1.18E-06	5.36523E-10	6.20976E-09
100-21-0	1.09E-12	1.46086E-12	5.51E-04	2.50938E-07	2.89972E-06
106-93-4	1.32E-13	2.06525E-13	7.79E-05	3.54189E-08	4.09943E-07
106-97-8	8.01E-14	3.88355E-14	1.47E-05	6.66026E-09	7.70863E-08
106-99-0	8.62E-14	3.8894E-14	1.47E-05	6.6703E-09	7.72025E-08
108-87-2	4.72E-14	3.87173E-14	1.46E-05	6.63998E-09	7.68516E-08
110-54-3	5.40E-14	3.88017E-14	1.46E-05	6.65446E-09	7.70192E-08
110-82-7	5.52E-14	3.87957E-14	1.46E-05	6.65346E-09	7.70074E-08
111-84-2	3.63E-14	3.88535E-14	1.47E-05	6.66334E-09	7.7122E-08
118-74-1	1.68E-15	3.98944E-15	1.51E-06	6.84186E-10	7.91882E-09
120-12-7	2.71E-13	4.03298E-13	1.52E-04	6.91653E-08	8.00525E-07
127-18-4	2.83E-14	3.91479E-14	1.48E-05	6.71383E-09	7.77064E-08
1336-36-3	2.51E-13	6.74137E-13	2.54E-04	1.15614E-07	1.33812E-06
144-62-7	1.95E-13	1.46254E-13	5.52E-05	2.50825E-08	2.90307E-07
208-96-8	2.57E-13	3.26487E-13	1.23E-04	5.59973E-08	6.48059E-07
50-32-8	8.30E-15	1.74692E-14	6.59E-06	2.99595E-09	3.46753E-08
56-23-5	3.05E-14	3.91E-14	1.48E-05	6.70734E-09	7.76312E-08
60-35-5	6.47E-13	3.18948E-13	1.20E-04	5.46993E-08	6.33093E-07
60-57-1	1.58E-15	5.0144E-15	1.89E-06	8.59965E-10	9.9533E-09
62-75-9	2.23E-12	1.36632E-12	5.15E-04	2.34288E-07	2.71167E-06
75-12-7	3.88E-12	1.45666E-12	5.50E-04	2.49817E-07	2.8914E-06
76-15-3	3.01E-14	3.87801E-14	1.46E-05	6.65076E-09	7.69764E-08
8001-35-2	1.79E-15	6.04898E-15	2.28E-06	1.03739E-09	1.20049E-08
88-89-1	2.71E-12	5.18279E-12	1.96E-03	8.88844E-07	1.02875E-05
126-73-8	5.71E-13	1.26794E-12	4.78E-04	2.1745E-07	2.51679E-06

River Protection Project - Waste Treatment Plant

Stream Number: LMP06
Stream Name: Melter effgas (primary)
Run Data File: H:\Working Folder 11 (Vishal)\Emissions_Case2_Run4_SubEm\MRQ_03_054_run1_Streams.csv
Run Date / Time: 4/15/2003 - 6:40:10 AM

Stream Properties		
Variable	Value	Units
Density	4.52E-04	g/cm³
Enthalpy	-1.19E-07	BTU/hr
Mass Flow	6.50E+03	Lb/hr
	1.56E+05	Lb/day
Volumetric Flow	2.80E+04	GPM
Molar Flow	2.46E+02	Lbmol/hr
Volumetric Flow	3.74E+03	ft³/min
Molecular Weight	2.58E+01	Lb/Lbmol
Pressure	9.83E+02	mbar
Temperature	4.00E+02	C
Viscosity	3.19E-02	cP
Na Molarity	0.00E+00	mol/L
pH	N/A	pH
Total TRU	5.92E-11	Ci/L
Total Activity	2.35E-07	Ci/L

Gaseous Components (1)			
Component	mol/L	Lb/day	Mt/day
CO	1.29E-05	1.21E+02	0.055041335
CO_2	1.29E-03	1.90E+04	8.64810066
H_2O	7.10E-03	4.31E+04	19.56830477
NO	4.22E-04	4.25E+03	1.936049184
NO_2	3.84E-05	5.95E+02	0.27046549
N_2	6.48E-03	6.10E+04	27.74728371
O_2	2.19E-03	2.36E+04	10.70777218
SO_2	1.13E-05	2.42E+02	0.110215827
NH_3	1.19E-07	6.81E-01	0.00030968
HNO_3	3.25E-59	6.90E-52	3.13442E-55
HCl	1.98E-05	2.43E+02	0.110393746
HF	9.64E-06	6.49E-01	0.029495321

(1) All radionuclides in gaseous streams are assumed to exist as solid particulate.

Component	Aqueous Components mol/L	Lb/gal	Lb/day	Solid Components Lb/day	Total Component Lb/day	Solid Components mt/day	Total Component g/sec
Total	0.00E+00	0.00E+00	0.00E+00	3.67E+03	3.67E+03	1.668850781	19.31308775
Ag^+	0.00E+00	0.00E+00	0.00E+00	1.27E-01	1.27E-01	5.78544E-05	0.000669611
Al^{+3}	0.00E+00	0.00E+00	0.00E+00	3.47E-01	3.47E-01	0.015790516	0.1827606
As^{+3}	0.00E+00	0.00E+00	0.00E+00	1.21E-03	1.21E-03	0.547910033	6.341551307
B^{+3}	0.00E+00	0.00E+00	0.00E+00	1.20E-02	1.20E-02	0.054473818	0.630484
Ba^{+2}	0.00E+00	0.00E+00	0.00E+00	3.94E-02	3.94E-02	1.79003E-05	0.000207179
Bi^{+3}	0.00E+00	0.00E+00	0.00E+00	1.21E-01	1.21E-01	5.50475E-05	0.000637123
$C_2O_4^{-2}$	0.00E+00	0.00E+00	0.00E+00	5.45E+02	5.45E+02	0.247670974	2.866542202
Ca^{+2}	0.00E+00	0.00E+00	0.00E+00	6.36E+01	6.36E+01	0.028899546	0.334485484
Cd^{+2}	0.00E+00	0.00E+00	0.00E+00	1.42E+01	1.42E+01	0.006439439	0.074530548
Ce^{+3}	0.00E+00	0.00E+00	0.00E+00	1.66E-01	1.66E-01	7.56349E-05	0.000875404
Cl^-	0.00E+00	0.00E+00	0.00E+00	8.00E+01	8.00E+01	0.036355115	0.420776792
CO_3^{-2}	0.00E+00	0.00E+00	0.00E+00	0.00E+00	0.00E+00	0	0
Cr^{+3}	0.00E+00	0.00E+00	0.00E+00	2.99E+00	2.99E+00	0.001357237	0.015708767
Cu^{+2}	0.00E+00	0.00E+00	0.00E+00	2.00E-02	2.00E-02	9.08879E-06	0.000105194
F^-	0.00E+00	0.00E+00	0.00E+00	1.24E-02	1.24E+02	0.056287724	0.651478284
Fe^{+3}	0.00E+00	0.00E+00	0.00E+00	2.05E-01	2.05E+01	0.009340679	0.108109707
H^+	0.00E+00	0.00E+00	0.00E+00		0.00E+00	0	0
H_2O	0.00E+00	0.00E+00	0.00E+00		0.00E+00	0	0
Hg^{+2}	0.00E+00	0.00E+00	0.00E+00	4.78E+00	4.78E+00	0.002172793	0.025148066
K^+	0.00E+00	0.00E+00	0.00E+00	1.05E+02	1.05E+02	0.047893411	0.554321889
La^{+3}	0.00E+00	0.00E+00	0.00E+00	6.67E-02	6.67E-02	3.03367E-05	0.000351119
Li^+	0.00E+00	0.00E+00	0.00E+00	2.08E+01	2.08E+01	0.009471133	0.109619592
Mg^{+2}	0.00E+00	0.00E+00	0.00E+00	7.77E+00	7.77E+00	0.003531568	0.040874634
Mn^{+3}	0.00E+00	0.00E+00	0.00E+00	1.02E+00	1.02E+00	0.000465502	0.00538776
MnO_4^-	0.00E+00	0.00E+00	0.00E+00		0.00E+00	0	0
Na^+	0.00E+00	0.00E+00	0.00E+00	7.02E+01	7.02E+01	0.031923141	0.369480796
NH_4^+	0.00E+00	0.00E+00	0.00E+00	0.00E+00	0.00E+00	0	0
Ni^{+2}	0.00E+00	0.00E+00	0.00E+00	5.71E-01	5.71E-01	0.000259638	0.00300507
NO_2^-	0.00E+00	0.00E+00	0.00E+00	0.00E+00	0.00E+00	0	0
NO_3^-	0.00E+00	0.00E+00	0.00E+00	0.00E+00	0.00E+00	0	0
O^{-2}				9.87E+02	9.87E+02	0.448497025	5.190937792
OH^-	0.00E+00	0.00E+00	0.00E+00	0.00E+00	0.00E+00	0	0
$OH(b)^-$	0.00E+00	0.00E+00	0.00E+00		0.00E+00	0	0
P^{+5}				1.47E+01	1.47E+01	0.00667526	0.077259949
Pb^{+2}	0.00E+00	0.00E+00	0.00E+00	2.01E-01	2.01E-01	9.12777E-05	0.001056455
Pd^{+2}	0.00E+00	0.00E+00	0.00E+00	1.21E-03	1.21E-03	5.50347E-07	6.36976E-06
PO_4^{-3}	0.00E+00	0.00E+00	0.00E+00	0.00E+00	0.00E+00	0	0
S^{-2}				0.00E+00	0.00E+00	0	0
Si^{+4}				7.98E+01	7.98E+01	0.036252978	0.419594657
SiO_4^{-4}	0.00E+00	0.00E+00	0.00E+00		0.00E+00	0	0
SO_4^{-2}	0.00E+00	0.00E+00	0.00E+00	0.00E+00	0.00E+00	0	0
Sr^{+2}	0.00E+00	0.00E+00	0.00E+00	1.21E-02	1.21E-02	5.51303E-06	6.3808E-05
Ti^{+4}	0.00E+00	0.00E+00	0.00E+00	1.33E+02	1.33E+02	0.060629966	0.701735713
Zn^{+2}	0.00E+00	0.00E+00	0.00E+00	2.70E+01	2.70E+01	0.012278687	0.142114436
Zr^{+4}	0.00E+00	0.00E+00	0.00E+00	8.21E+00	8.21E+00	0.003731395	0.043187438

Rad. Component	Aqueous Rad. Components			Solids Rad. Components (1)			Total Rad. Components (1)		
	Ci/L	Ci/day	Lb/day	Ci/L	Ci/day	Lb/day	Ci/L	Ci/day	Lb/day
Total	0.00E+00	0.00E+00	0.00E+00	2.35E-07	3.58E+01	8.92E-01	2.35E-07	3.58E+01	8.92E-01
^{241}Am	0	0.00E+00	0.00E+00	4.28E-11	6.53E-03	4.20E-06	4.28E-11	6.53E-03	4.20E-06
^{14}C	0.00E+00	0.00E+00	0.00E+00	6.01E-09	9.17E-01	4.53E-04	6.01E-09	9.17E-01	4.53E-04
^{60}Co	0.00E+00	0.00E+00	0.00E+00	4.26E-11	6.51E-03	1.27E-08	4.26E-11	6.51E-03	1.27E-08
^{243}Cm	0.00E+00	0.00E+00	0.00E+00	1.14E-13	1.74E-05	7.57E-10	1.14E-13	1.74E-05	7.57E-10
^{244}Cm	0.00E+00	0.00E+00	0.00E+00	1.22E-13	1.87E-05	5.08E-10	1.22E-13	1.87E-05	5.08E-10
^{137}Cs	0.00E+00	0.00E+00	0.00E+00	3.04E-09	4.64E-01	1.18E-05	3.04E-09	4.64E-01	1.18E-05
^{152}Eu	0.00E+00	0.00E+00	0.00E+00	1.49E-10	2.28E-02	2.89E-07	1.49E-10	2.28E-02	2.89E-07
^{154}Eu	0.00E+00	0.00E+00	0.00E+00	4.95E-10	7.55E-02	6.16E-07	4.95E-10	7.55E-02	6.16E-07
^{155}Eu	0.00E+00	0.00E+00	0.00E+00	8.51E-10	1.30E-01	5.90E-07	8.51E-10	1.30E-01	5.90E-07
^{3}H	0.00E+00	0.00E+00	0.00E+00	2.94E-09	4.49E-01	1.03E-07	2.94E-09	4.49E-01	1.03E-07
^{129}I	0.00E+00	0.00E+00	0.00E+00	7.00E-11	1.07E-02	1.33E-01	7.00E-11	1.07E-02	1.33E-01
^{41}Nb	0.00E+00	0.00E+00	0.00E+00	6.14E-10	9.37E-02	3.64E-06	6.14E-10	9.37E-02	3.64E-06
^{237}Np	0.00E+00	0.00E+00	0.00E+00	1.84E-13	2.81E-05	8.79E-05	1.84E-13	2.81E-05	8.79E-05
^{238}Pu	0.00E+00	0.00E+00	0.00E+00	2.48E-13	3.79E-05	4.87E-09	2.48E-13	3.79E-05	4.87E-09
^{239}Pu	0.00E+00	0.00E+00	0.00E+00	2.90E-12	4.43E-04	1.57E-05	2.90E-12	4.43E-04	1.57E-05
^{240}Pu	0.00E+00	0.00E+00	0.00E+00	5.00E-13	7.63E-05	7.41E-07	5.00E-13	7.63E-05	7.41E-07
^{242}Pu	0.00E+00	0.00E+00	0.00E+00	1.24E-11	1.89E-03	4.04E-08	1.24E-11	1.89E-03	4.04E-08
^{125}Sb	0.00E+00	0.00E+00	0.00E+00	4.58E-09	6.99E-01	1.48E-06	4.58E-09	6.99E-01	1.48E-06
^{126}Sm	0.00E+00	0.00E+00	0.00E+00	2.83E-08	4.32E+00	3.62E-04	2.83E-08	4.32E+00	3.62E-04
^{151}Sm	0.00E+00	0.00E+00	0.00E+00	1.71E-11	2.61E-03	5.07E-04	1.71E-11	2.61E-03	5.07E-04
^{90}Sr	0.00E+00	0.00E+00	0.00E+00	1.85E-07	2.82E+01	4.50E-04	1.85E-07	2.82E+01	4.50E-04
^{99}Tc	0.00E+00	0.00E+00	0.00E+00	2.46E-09	3.75E-01	4.88E-02	2.46E-09	3.75E-01	4.88E-02
^{232}Th	0.00E+00	0.00E+00	0.00E+00	6.34E-14	9.67E-06	1.94E-01	6.34E-14	9.67E-06	1.94E-01
^{233}U	0.00E+00	0.00E+00	0.00E+00	1.18E-12	1.79E-04	4.11E-05	1.18E-12	1.79E-04	4.11E-05
^{234}U	0.00E+00	0.00E+00	0.00E+00	6.84E-13	1.04E-04	3.71E-05	6.84E-13	1.04E-04	3.71E-05
^{235}U	0.00E+00	0.00E+00	0.00E+00	2.64E-14	4.03E-06	4.11E-03	2.64E-14	4.03E-06	4.11E-03
^{236}U	0.00E+00	0.00E+00	0.00E+00	7.92E-14	1.21E-05	4.12E-04	7.92E-14	1.21E-05	4.12E-04
^{238}U	0.00E+00	0.00E+00	0.00E+00	5.09E-13	7.77E-05	5.10E-01	5.09E-13	7.77E-05	5.10E-01

Component (CAS)	Organic Components mol/L	Lb/gal	Lb/day	Mt/day	g/sec
Total	1.68E-07	2.77E-07	8.94E-01	0.038821907	0.449327624
57-14-7	2.95E-10	1.47957E-10	5.94E-03	2.71104E-06	3.13778E-05
58-90-2	1.52E-10	2.94958E-10	1.19E-02	5.38798E-06	6.23608E-05
58-89-9	9.55E-13	2.31886E-12	9.35E-05	4.24868E-08	4.91769E-07
71-43-2	0.00E+00	0	0.00E+00	0	0
75-05-8	1.22E-11	4.17293E-12	1.68E-04	7.64612E-08	8.84968E-07
76-44-8	0.00E+00	0	0.00E+00	0	0
79-01-6	0.00E+00	0	0.00E+00	0	0
84-74-2	3.73E-09	8.65613E-09	3.49E-01	0.000158607	0.001835733
84-66-2	1.15E-08	2.50083E-08	1.01E+00	0.00045823	0.005303585
87-86-5	4.83E-08	1.07313E-07	4.33E+00	0.001966309	0.022758203
87-68-3	0.00E+00	0	0.00E+00	0	0
88-85-7	4.41E-08	8.84721E-08	3.57E+00	0.001621086	0.018762571
91-20-3	0.00E+00	0	0.00E+00	0	0
98-86-2	2.11E-10	2.11877E-10	8.54E-03	3.88224E-06	4.49334E-05
108-95-2	5.65E-08	4.44025E-08	1.79E+00	0.000813593	0.00941658
108-88-3	0.00E+00	0	0.00E+00	0	0
120-82-1	0.00E+00	0	0.00E+00	0	0
122-66-7	0.00E+00	0	0.00E+00	0	0
122-39-4	2.93E-10	4.13642E-10	1.67E-02	7.57922E-06	8.77234E-05
129-00-0	1.37E-10	2.13706E-10	8.61E-03	3.93577E-06	4.55314E-05
132-64-9	1.73E-14	2.43268E-14	9.81E-07	4.4578E-10	5.15949E-09
218-01-9	5.94E-10	1.13199E-09	4.56E-02	2.07415E-05	0.000240064
309-00-2	1.82E-14	5.55198E-14	2.24E-06	1.0173E-09	1.17743E-08
319-85-7	6.04E-11	1.46559E-10	5.91E-03	2.68542E-06	3.10812E-05
534-52-1	0.00E+00	0	0.00E+00	0	0
603-34-9	3.79E-10	7.75727E-10	3.13E-02	1.42137E-05	0.000164511
4170-30-3	9.35E-11	5.46992E-11	2.20E-03	1.00226E-06	1.16002E-05
10061-01-5	0.00E+00	0	0.00E+00	0	0
38380-08-4	7.34E-13	2.21146E-12	8.91E-05	4.05208E-08	4.68991E-07
100-21-0	8.45E-08	1.37118E-07	4.72E+00	0.002145978	0.024837705
106-93-4	3.06E-17	4.79137E-17	1.93E-09	8.7793E-13	1.01612E-11
106-97-8	0.00E+00	0	0.00E+00	0	0
106-99-0	0.00E+00	0	0.00E+00	0	0
108-87-2	0.00E+00	0	0.00E+00	0	0
110-54-3	0.00E+00	0	0.00E+00	0	0
120-82-7	0.00E+00	0	0.00E+00	0	0
111-84-2	0.00E+00	0	0.00E+00	0	0
118-74-1	0.00E+00	0	0.00E+00	0	0
120-12-7	2.71E-12	4.02945E-12	1.62E-04	7.38323E-08	8.54538E-07
127-18-4	0.00E+00	0	0.00E+00	0	0
1336-36-3	9.65E-17	2.56512E-16	1.04E-08	4.72759E-12	5.47175E-11
144-62-7	1.59E-08	1.16617E-08	4.79E-01	0.000234037	0.002477287
208-96-8	3.81E-13	4.83396E-13	1.95E-05	8.85732E-09	1.02519E-07
50-32-8	2.74E-10	5.76523E-10	2.32E-02	1.05637E-05	0.000122265
56-23-5	0.00E+00	0	0.00E+00	0	0
60-35-5	5.05E-08	2.48912E-08	1.00E+00	0.000456084	0.005278749
60-57-1	3.57E-13	1.13585E-12	4.58E-05	2.08124E-08	2.40884E-07
62-75-9	1.68E-08	1.03639E-08	4.18E-01	0.000189898	0.002197891
75-12-7	3.10E-07	1.16479E-07	4.70E+00	0.002134189	0.024701263
76-15-3	0.00E+00	0	0.00E+00	0	0
8001-35-2	1.15E-12	3.99938E-12	1.61E-04	7.30598E-08	8.46042E-07
88-89-1	8.16E-07	1.56037E-06	6.29E-01	0.028590876	0.330912918
126-73-8	3.23E-08	7.17133E-08	2.89E+00	0.001314032	0.015208472

River Protection Project - Waste Treatment Plant

Stream Number: HMP06
Stream Name: Melter offgas (primary)
Run Data File: H:\Working Folder 11 (Vishal)\Emissions_Case2_Run4_SubEm\MRQ_03_054_run1_Streams.csv
Run Date / Time: 4/15/2003 - 6:40:10 AM

Stream Properties		
Variable	Value	Units
Density	3.64E-04	g/cm³
Enthalpy	-1.69E+07	BTU/hr
Mass Flow	4.88E+03	Lb/hr
	1.17E+05	Lb/day
Volumetric Flow	2.48E+04	GPM
Molar Flow	2.18E+02	Lbmol/hr
Volumetric Flow	3.32E+03	ft³/min
Molecular Weight	2.07E+01	Lb/Lbmol
Pressure	9.83E+02	mbar
Temperature	4.00E+02	C
Viscosity	2.82E-02	cP
Na Molarity	0.00E+00	mol/L
pH	N/A	pH
Total TRU	4.80E-08	Ci/L
Total Activity	3.25E-05	Ci/L

Gaseous Components (1)			
Component	mol/L	Lb/day	Mt/day
CO	2.40E-06	2.00E+01	0.009107806
CO_2	2.40E-04	3.15E+03	1.431019457
H_2O	1.36E-02	7.33E+04	33.30428564
NO	9.21E-05	8.24E+02	0.374450438
NO_2	8.39E-06	1.15E+02	0.052310614
N_2	2.76E-03	2.30E+04	10.46927274
O_2	8.32E-04	7.94E+03	3.606827788
SO_2	1.68E-06	3.21E+01	0.014592218
NH_3	2.15E-06	1.09E+01	0.004971796
HNO_3	3.99E-48	7.49E-41	3.40366E-44
HCl	2.27E-06	2.47E+01	0.011207442
HF	2.45E-06	1.46E+01	0.006630528

(1) All radionuclides in gaseous streams are assumed to exist as solid particulate.

Component	Aqueous Components mol/L	Lb/gal	Lb/day	Solid Components Lb/day	Total Component Lb/day	Solid Components mt/day	Total Component g/sec
Total	0.00E+00	0.00E+00	0.00E+00	8.63E-03	8.63E-03	3.923735222	45.41360211
Ag^+	0.00E+00	0.00E+00	0.00E+00	4.59E-01	4.59E-01	0.000208605	0.002414412
Al^{+3}	0.00E+00	0.00E+00	0.00E+00	5.27E-00	5.27E-00	0.002393896	0.02770713
As^{+3}	0.00E+00	0.00E+00	0.00E+00	6.25E-03	6.25E-03	2.841894403	32.89229634
B^{+3}	0.00E+00	0.00E+00	0.00E+00	1.23E-01	1.23E-01	0.005586492	0.064658468
Ba^{+2}	0.00E+00	0.00E+00	0.00E+00	1.07E+00	1.07E+00	0.000487878	0.005646738
Bi^{+3}	0.00E+00	0.00E+00	0.00E+00	6.78E-01	6.78E-01	0.000307999	0.003564798
$C_2O_4^{-2}$	0.00E+00	0.00E+00	0.00E+00	1.25E+02	1.25E+02	0.056801398	0.657423587
Ca^{+2}	0.00E+00	0.00E+00	0.00E+00	2.88E+00	2.88E+00	0.001307189	0.015129502
Cd^{+2}	0.00E+00	0.00E+00	0.00E+00	1.32E+01	1.32E+01	0.00599277	0.069360762
Ce^{+3}	0.00E+00	0.00E+00	0.00E+00	1.13E-01	1.13E-01	5.11596E-05	0.000592125
Cl^-	0.00E+00	0.00E+00	0.00E+00	8.03E+00	8.03E+00	0.00365186	0.042266896
CO_3^{-2}	0.00E+00	0.00E+00	0.00E+00	0.00E+00	0.00E+00	0	0
Cr^{+3}	0.00E+00	0.00E+00	0.00E+00	4.60E-01	4.60E-01	0.000209036	0.0024194
Cs^{+2}	0.00E+00	0.00E+00	0.00E+00	5.88E-02	5.88E-02	2.67249E-05	0.000309316
F^-	0.00E+00	0.00E+00	0.00E+00	2.60E-01	2.60E+01	0.0118039	0.136619209
Fe^{+3}	0.00E+00	0.00E+00	0.00E+00	3.51E+00	3.51E+00	0.001596332	0.018476068
H^+	0.00E+00	0.00E+00	0.00E+00		0.00E+00	0	0
H_2O	0.00E+00	0.00E+00	0.00E+00		0.00E+00	0	0
Hg^{+2}	0.00E+00	0.00E+00	0.00E+00	5.04E-01	5.04E+01	0.022886777	0.264893257
K^+	0.00E+00	0.00E+00	0.00E+00	1.18E-01	1.18E+01	0.005344524	0.061857917
La^{+3}	0.00E+00	0.00E+00	0.00E+00	1.25E-00	1.25E+00	0.000570383	0.006601652
Li^+	0.00E+00	0.00E+00	0.00E+00	1.06E+00	1.06E+00	0.000482155	0.005580497
Mg^{+2}	0.00E+00	0.00E+00	0.00E+00	2.55E-01	2.55E-01	0.000115688	0.001338986
Mn^{+3}	0.00E+00	0.00E+00	0.00E+00	2.17E+00	2.17E+00	0.000986765	0.011420888
MnO_4^-	0.00E+00	0.00E+00	0.00E+00		0.00E+00	0	0
Na^+	0.00E+00	0.00E+00	0.00E+00	1.21E+01	1.21E+01	0.005520495	0.063894623
NH_4^+	0.00E+00	0.00E+00	0.00E+00	0.00E+00	0.00E+00	0	0
Ni^{+2}	0.00E+00	0.00E+00	0.00E+00	6.99E-01	6.99E-01	0.000317647	0.003676464
NO_2^-	0.00E+00	0.00E+00	0.00E+00	0.00E+00	0.00E+00	0	0
NO_3^-	0.00E+00	0.00E+00	0.00E+00	0.00E+00	0.00E+00	0	0
O^{-2}				2.08E+03	2.08E+03	0.944142602	10.92757641
OH^-	0.00E+00	0.00E+00	0.00E+00	0.00E+00	0.00E+00	0	0
$OH(b)^-$	0.00E+00	0.00E+00	0.00E+00		0.00E+00	0	0
P^{+5}				3.26E+00	3.26E+00	0.001479944	0.017128987
Pb^{+2}	0.00E+00	0.00E+00	0.00E+00	1.50E-01	1.50E-01	6.826E-05	0.000790046
Pd^{+2}	0.00E+00	0.00E+00	0.00E+00	1.55E-02	1.55E-02	7.04456E-06	8.15343E-05
PO_4^{-3}	0.00E+00	0.00E+00	0.00E+00	0.00E+00	0.00E+00	0	0
S^{-2}				0.00E+00	0.00E+00	0	0
Si^{+4}				8.12E+00	8.12E+00	0.00369192	0.042730556
SiO_4^{-4}	0.00E+00	0.00E+00	0.00E+00		0.00E+00	0	0
SO_4^{-2}	0.00E+00	0.00E+00	0.00E+00	0.00E+00	0.00E+00	0	0
Sr^{+2}	0.00E+00	0.00E+00	0.00E+00	1.25E-01	1.25E-01	5.67528E-05	0.000656861
Ti^{+4}	0.00E+00	0.00E+00	0.00E+00	9.60E+00	9.60E+00	0.004363962	0.050508824
Zn^{+2}	0.00E+00	0.00E+00	0.00E+00	1.85E+00	1.85E+00	0.000842722	0.009753727
Zr^{+4}	0.00E+00	0.00E+00	0.00E+00	1.18E+00	1.18E+00	0.000537938	0.006226134

Rad.	Aqueous Rad. Components			Solids Rad. Components (1)			Total Rad. Components (1)		
Component	Ci/L	Ci/day	Lb/day	Ci/L	Ci/day	Lb/day	Ci/L	Ci/day	Lb/day
Total	0.00E+00	0.00E+00	0.00E+00	3.25E-05	4.40E+03	1.39E+01	3.25E-05	4.40E+03	1.39E+01
^{241}Am	0	0.00E+00	0.00E+00	3.57E-08	4.83E+00	3.11E-03	3.57E-08	4.83E+00	3.11E-03
^{14}C	0.00E+00	0.00E+00	0.00E+00	1.20E-09	1.62E-01	7.99E-05	1.20E-09	1.62E-01	7.99E-05
^{60}Co	0.00E+00	0.00E+00	0.00E+00	3.97E-09	5.37E-01	1.05E-06	3.97E-09	5.37E-01	1.05E-06
^{243}Cm	0.00E+00	0.00E+00	0.00E+00	1.19E-09	1.61E-01	7.02E-06	1.19E-09	1.61E-01	7.02E-06
^{244}Cm	0.00E+00	0.00E+00	0.00E+00	8.91E-10	1.21E-01	3.28E-06	8.91E-10	1.21E-01	3.28E-06
^{137}Cs	0.00E+00	0.00E+00	0.00E+00	2.36E-05	3.20E+03	8.12E-02	2.36E-05	3.20E+03	8.12E-02
^{152}Eu	0.00E+00	0.00E+00	0.00E+00	2.07E-10	2.80E-02	3.55E-07	2.07E-10	2.80E-02	3.55E-07
^{154}Eu	0.00E+00	0.00E+00	0.00E+00	2.07E-08	2.80E+00	2.28E-05	2.07E-08	2.80E+00	2.28E-05
^{155}Eu	0.00E+00	0.00E+00	0.00E+00	1.16E-08	1.57E+00	7.12E-06	1.16E-08	1.57E+00	7.12E-06
^{3}H	0.00E+00	0.00E+00	0.00E+00	3.72E-08	5.03E+00	1.15E-06	3.72E-08	5.03E+00	1.15E-06
^{129}I	0.00E+00	0.00E+00	0.00E+00	3.26E-11	4.41E-03	5.50E-02	3.26E-11	4.41E-03	5.50E-02
^{63}Ni	0.00E+00	0.00E+00	0.00E+00	4.32E-09	5.84E-01	2.27E-05	4.32E-09	5.84E-01	2.27E-05
^{237}Np	0.00E+00	0.00E+00	0.00E+00	2.93E-11	3.97E-03	1.24E-02	2.93E-11	3.97E-03	1.24E-02
^{238}Pu	0.00E+00	0.00E+00	0.00E+00	1.39E-10	1.88E-02	2.42E-06	1.39E-10	1.88E-02	2.42E-06
^{239}Pu	0.00E+00	0.00E+00	0.00E+00	1.23E-09	1.66E-01	5.91E-03	1.23E-09	1.66E-01	5.91E-03
^{240}Pu	0.00E+00	0.00E+00	0.00E+00	6.74E-11	9.12E-03	8.86E-05	6.74E-11	9.12E-03	8.86E-05
^{241}Pu	0.00E+00	0.00E+00	0.00E+00	8.73E-09	1.18E+00	2.53E-05	8.73E-09	1.18E+00	2.53E-05
^{125}Sb	0.00E+00	0.00E+00	0.00E+00	2.60E-08	3.52E+00	7.48E-06	2.60E-08	3.52E+00	7.48E-06
^{151}Sm	0.00E+00	0.00E+00	0.00E+00	4.29E-08	5.80E+00	4.86E-04	4.29E-08	5.80E+00	4.86E-04
^{126}Sn	0.00E+00	0.00E+00	0.00E+00	6.14E-11	8.31E-03	1.61E-03	6.14E-11	8.31E-03	1.61E-03
^{90}Sr	0.00E+00	0.00E+00	0.00E+00	7.99E-06	1.08E+03	1.73E-02	7.99E-06	1.08E+03	1.73E-02
^{99}Tc	0.00E+00	0.00E+00	0.00E+00	6.89E-07	9.32E+01	1.21E+01	6.89E-07	9.32E+01	1.21E+01
^{232}Th	0.00E+00	0.00E+00	0.00E+00	3.18E-13	4.31E-05	8.63E-01	3.18E-13	4.31E-05	8.63E-01
^{233}U	0.00E+00	0.00E+00	0.00E+00	4.91E-13	6.64E-05	1.52E-05	4.91E-13	6.64E-05	1.52E-05
^{234}U	0.00E+00	0.00E+00	0.00E+00	1.37E-12	1.86E-04	6.60E-05	1.37E-12	1.86E-04	6.60E-05
^{235}U	0.00E+00	0.00E+00	0.00E+00	1.02E-13	1.38E-05	1.41E-02	1.02E-13	1.38E-05	1.41E-02
^{236}U	0.00E+00	0.00E+00	0.00E+00	4.94E-14	6.68E-06	2.28E-04	4.94E-14	6.68E-06	2.28E-04
^{238}U	0.00E+00	0.00E+00	0.00E+00	7.87E-13	1.07E-04	6.99E-01	7.87E-13	1.07E-04	6.99E-01

Component	Organic Components				
(CAS)	mol/L	Lb/gal	Lb/day	Mt/day	g/sec
Total	2.45E-07	3.36E-07	1.88E+01	0.008560596	0.099080976
57-14-7	3.51E-08	1.75921E-08	6.29E-01	0.000285725	0.003307003
58-90-2	1.02E-08	1.97425E-08	7.05E-01	0.000320652	0.003711244
58-89-9	3.96E-11	9.6157E-11	3.44E-03	1.56175E-06	1.80758E-05
71-43-2	2.23E-16	1.45306E-16	5.19E-09	2.36002E-12	2.73151E-11
75-05-8	8.91E-09	3.05131E-09	1.09E-01	4.95585E-05	0.000573594
76-44-8	1.13E-12	3.52338E-12	1.26E-04	5.72256E-08	6.62333E-07
79-01-6	6.45E-18	7.07778E-18	2.53E-10	1.14955E-13	1.3305E-12
84-74-2	1.53E-08	3.54439E-08	1.27E+00	0.000575668	0.006662825
84-66-2	1.82E-08	3.36887E-08	1.20E+00	0.000547161	0.006332886
87-86-5	1.64E-08	3.64705E-08	1.30E+00	0.000592342	0.00685581
87-68-3	2.49E-18	5.41447E-18	1.93E-10	8.79402E-14	1.01783E-12
88-85-7	2.57E-08	5.157E-08	1.84E+00	0.000837583	0.009694247
91-20-3	1.38E-12	1.47578E-12	5.27E-05	2.39691E-08	2.7742E-07
98-86-2	1.87E-08	1.87691E-08	6.71E-01	0.000304841	0.003528253
108-95-2	4.55E-08	3.57127E-08	1.28E+00	0.000580034	0.006713359
108-88-3	7.36E-17	5.65512E-17	2.02E-09	9.18487E-13	1.06306E-11
120-82-1	6.61E-14	1.00086E-13	3.58E-06	1.62557E-09	1.88145E-08
122-66-7	0.00E+00	0	0.00E+00	0	0
122-39-4	3.89E-09	5.4963E-09	1.96E-01	8.92691E-05	0.001033208
129-00-0	1.38E-08	2.32598E-08	8.31E-01	0.000377779	0.004372441
132-64-9	2.99E-10	4.20174E-10	1.50E-02	6.82433E-06	7.89853E-05
218-01-9	1.47E-08	2.79726E-08	1.00E+00	0.000454322	0.005258352
309-00-2	5.27E-11	1.60519E-10	5.74E-03	2.6071E-06	3.01748E-05
319-85-7	6.27E-11	1.52226E-10	5.44E-03	2.4724E-06	2.86158E-05
534-52-1	0.00E+00	0	0.00E+00	0	0
603-34-9	1.10E-08	2.24396E-08	8.02E-01	0.000364456	0.004218246
4170-30-3	7.24E-09	4.23475E-09	1.51E-01	6.87795E-05	0.0007960 59
10061-01-5	5.62E-15	5.20224E-15	1.86E-07	8.44931E-11	9.77929E-10
38380-08-4	3.76E-11	1.13335E-10	4.05E-03	1.84075E-06	2.13049E-05
100-21-0	2.61E-08	3.62323E-08	1.29E+00	0.000588473	0.006811036
106-93-4	6.34E-12	9.9375E-12	3.55E-04	1.61402E-07	1.86807E-06
106-97-8	0.00E+00	0	0.00E+00	0	0
106-99-0	0.00E+00	0	0.00E+00	0	0
108-87-2	0.00E+00	0	0.00E+00	0	0
110-54-3	0.00E+00	0	0.00E+00	0	0
110-82-7	0.00E+00	0	0.00E+00	0	0
111-84-2	0.00E+00	0	0.00E+00	0	0
118-74-1	1.85E-15	4.3928E-15	1.57E-07	7.13464E-11	8.25769E-10
120-12-7	3.97E-09	5.90628E-09	2.11E-01	9.5928E-05	0.001110277
127-18-4	1.85E-19	2.5602E-19	9.15E-12	4.15819E-15	4.81272E-14
1336-36-3	1.32E-10	3.55983E-10	1.27E-02	5.78177E-06	6.69186E-05
144-62-7	4.83E-09	3.63098E-09	1.30E-01	5.89732E-05	0.00068256
208-96-8	1.47E-09	1.86309E-09	6.66E-02	3.02597E-05	0.000350228
50-32-8	2.69E-10	5.66764E-10	2.03E-02	9.2052E-06	0.000106542
56-23-5	7.59E-26	9.74232E-26	3.48E-18	1.58232E-21	1.83139E-20
60-35-5	1.63E-08	8.03133E-09	2.87E-01	0.000130442	0.00150975
60-57-1	5.33E-11	1.69538E-10	6.06E-03	2.75359E-06	3.18703E-05
62-75-9	8.49E-08	5.25122E-08	1.88E+00	0.000852886	0.00987137
75-12-7	9.63E-08	3.61921E-08	1.29E+00	0.00058782	0.006803477
76-15-3	0.00E+00	0	0.00E+00	0	0
8001-35-2	6.32E-11	2.18442E-10	7.81E-03	3.54786E-06	4.10632E-05
88-89-1	2.35E-08	4.49955E-08	1.61E+00	0.000730803	0.008456373
126-73-8	1.65E-08	3.67265E-08	1.31E+00	0.0005965	0.006903933

River Protection Project - Waste Treatment Plant

Stream Number: PJV32
Stream Name: HLW pulse ventilation header offgas
Run Data File: H:\Working Folder 11 (Vishal)\Emissions_Case2_Run4_SubEm\MRQ_03_054_run1_Streams.csv
Run Date / Time: 4/15/2003 - 6:40:10 AM

Stream Properties		
Variable	Value	Units
Density	1.16E-03	g/cm³
Enthalpy	-8.56E-05	BTU/hr
Mass Flow	2.32E+04	Lb/hr
	5.57E+05	Lb/day
Volumetric Flow	4.00E+04	GPM
Molar Flow	8.08E+02	Lbmol/hr
Volumetric Flow	5.34E+03	ft³/min
Molecular Weight	2.87E+01	Lb/Lbmol
Pressure	1.00E+03	mbar
Temperature	2.50E+01	C
Viscosity	1.83E-02	cP
Na Molarity	0.00E+00	mol/L
pH	N/A	pH
Total TRU	6.32E-16	Ci/L
Total Activity	1.21E-13	Ci/L

Gaseous Components (1)			
Component	mol/L	Lb/day	Mt/day
CO	2.38E-32	3.20E-25	1.45421E-28
CO_2	6.89E-17	1.46E-09	6.62474E-13
H_2O	4.10E-04	3.54E+03	1.610811375
NO	1.94E-37	2.80E-30	1.27195E-33
NO_2	2.32E-37	5.12E-30	2.32576E-33
N_2	3.16E-02	4.25E+05	193.0629455
O_2	8.39E-03	1.29E+05	58.61857611
SO_2	1.84E-38	5.66E-31	2.57271E-34
NH_3	1.39E-15	1.14E-08	5.17226E-12
HNO_3	6.35E-24	1.92E-16	8.73531E-20
HCl	0.00E+00	0.00E+00	0
HF	5.29E-35	5.09E-28	2.31162E-31

(1) All radionuclides in gaseous streams are assumed to exist as solid particulate.

Component	Aqueous Components mol/L	Lb/gal	Lb/day	Solid Components Lb/day	Total Component Lb/day	Solid Components mt/day	Total Component g/sec
Total	0.00E+00	0.00E+00	0.00E+00	1.27E-05	1.27E-05	5.78178E-09	6.69188E-06
Ag^+	0.00E+00	0.00E+00	0.00E+00	1.96E-09	1.96E-09	8.90612E-13	1.0308E-11
Al^{+3}	0.00E+00	0.00E+00	0.00E+00	5.91E-08	5.91E-08	2.68509E-11	3.10775E-10
As^{+3}	0.00E+00	0.00E+00	0.00E+00	8.34E-06	8.34E-06	3.79294E-09	4.38998E-08
B^{+3}	0.00E+00	0.00E+00	0.00E+00	1.94E-08	1.94E-08	8.84081E-12	1.02324E-10
Ba^{+2}	0.00E+00	0.00E+00	0.00E+00	1.20E-08	1.20E-08	5.47158E-12	6.33285E-11
Bi^{+3}	0.00E+00	0.00E+00	0.00E+00	7.62E-09	7.62E-09	3.46568E-12	4.0112E-11
CrO_4^{-2}	0.00E+00	0.00E+00	0.00E+00	1.25E-07	1.25E-07	5.68014E-11	6.57424E-10
Ca^{+2}	0.00E+00	0.00E+00	0.00E+00	2.51E-08	2.51E-08	1.13972E-11	1.31912E-10
Cd^{+2}	0.00E+00	0.00E+00	0.00E+00	3.00E-08	3.00E-08	1.36417E-11	1.5789E-10
Ce^{+3}	0.00E+00	0.00E+00	0.00E+00	2.39E-09	2.39E-09	1.08542E-12	1.25628E-11
Cl^-	0.00E+00	0.00E+00	0.00E+00	2.31E-08	2.31E-08	1.0514E-11	1.2169E-10
CO_3^{-2}	0.00E+00	0.00E+00	0.00E+00	9.71E-08	9.71E-08	4.41312E-11	5.10778E-10
Cr^{+3}	0.00E+00	0.00E+00	0.00E+00	5.17E-09	5.17E-09	2.3502E-12	2.72013E-11
Cu^{+2}	0.00E+00	0.00E+00	0.00E+00	1.25E-09	1.25E-09	5.67859E-13	6.57244E-12
F^-	0.00E+00	0.00E+00	0.00E+00	6.28E-08	6.28E-08	2.85327E-11	3.30239E-10
Fe^{+2}	0.00E+00	0.00E+00	0.00E+00	7.45E-08	7.45E-08	3.38685E-11	3.91996E-10
H^+	0.00E+00	0.00E+00	0.00E+00		0.00E+00	0	0
H_2O	0.00E+00	0.00E+00	0.00E+00		0.00E+00	0	0
Hg^{+2}	0.00E+00	0.00E+00	0.00E+00	6.38E-08	6.38E-08	2.90216E-11	3.35898E-10
K^+	0.00E+00	0.00E+00	0.00E+00	3.85E-08	3.85E-08	1.74908E-11	2.02439E-10
La^{+3}	0.00E+00	0.00E+00	0.00E+00	7.60E-09	7.60E-09	3.54514E-12	4.10317E-11
Li^+	0.00E+00	0.00E+00	0.00E+00	1.85E-09	1.85E-09	8.42419E-13	9.75022E-12
Mg^{+2}	0.00E+00	0.00E+00	0.00E+00	5.40E-09	5.40E-09	2.45478E-12	2.84118E-11
Mn^{+2}	0.00E+00	0.00E+00	0.00E+00	1.89E-08	1.89E-08	8.60187E-12	9.95587E-11
MnO_4^-	0.00E+00	0.00E+00	0.00E+00		0.00E+00	0	0
Na^+	0.00E+00	0.00E+00	0.00E+00	1.37E-07	1.37E-07	6.21175E-11	7.18953E-10
NH_4^+	0.00E+00	0.00E+00	0.00E+00	0.00E+00	0.00E+00	0	0
Ni^{+2}	0.00E+00	0.00E+00	0.00E+00	7.08E-09	7.08E-09	3.21801E-12	3.72455E-11
NO_2^-	0.00E+00	0.00E+00	0.00E+00	3.92E-08	3.92E-08	1.7801E-11	2.0603E-10
NO_3^-	0.00E+00	0.00E+00	0.00E+00	2.70E-07	2.70E-07	1.22889E-10	1.42233E-09
O^{-2}				2.73E-06	2.73E-06	1.24132E-09	1.43672E-08
OH^-	0.00E+00	0.00E+00	0.00E+00	3.39E-07	3.39E-07	1.5387E-10	1.7809E-09
$OH(b)^-$	0.00E+00	0.00E+00	0.00E+00		0.00E+00	0	0
P^{+5}				2.00E-15	2.00E-15	9.11092E-19	1.0545E-17
Pb^{+2}	0.00E+00	0.00E+00	0.00E+00	3.19E-09	3.19E-09	1.45102E-12	1.67942E-11
Pd^{+2}	0.00E+00	0.00E+00	0.00E+00	3.29E-10	3.29E-10	1.4946E-13	1.72987E-12
PO_4^{-3}	0.00E+00	0.00E+00	0.00E+00	3.99E-08	3.99E-08	1.81512E-11	2.10083E-10
S^{-2}				2.72E-15	2.72E-15	1.23846E-18	1.4334E-17
Si^{+4}				5.58E-08	5.58E-08	2.53552E-11	2.93463E-10
SiO_4^{-4}	0.00E+00	0.00E+00	0.00E+00		0.00E+00	0	0
SO_4^{-2}	0.00E+00	0.00E+00	0.00E+00	1.30E-08	1.30E-08	5.90777E-12	6.8377E-11
Sr^{+2}	0.00E+00	0.00E+00	0.00E+00	1.40E-09	1.40E-09	6.36563E-13	7.36763E-12
Ti^{+4}	0.00E+00	0.00E+00	0.00E+00	1.59E-08	1.59E-08	7.21334E-12	8.34877E-11
Zn^{+2}	0.00E+00	0.00E+00	0.00E+00	3.51E-09	3.51E-09	1.59516E-12	1.84625E-11
Zr^{+4}	0.00E+00	0.00E+00	0.00E+00	3.69E-08	3.69E-08	1.67929E-11	1.94363E-10

Rad. Component	Aqueous Rad. Components			Solids Rad. Components (1)			Total Rad. Components (1)		
	Ci/L	Ci/day	Lb/day	Ci/L	Ci/day	Lb/day	Ci/L	Ci/day	Lb/day
Total	0.00E+00	0.00E+00	0.00E+00	1.21E-13	2.63E-05	5.32E-08	1.21E-13	2.63E-05	5.32E-08
^{195}Au	0	0.00E+00	0.00E+00	4.70E-16	1.02E-07	6.59E-11	4.70E-16	1.02E-07	6.59E-11
^{14}C	0.00E+00	0.00E+00	0.00E+00	7.43E-20	1.62E-11	7.99E-15	7.43E-20	1.62E-11	7.99E-15
^{60}Co	0.00E+00	0.00E+00	0.00E+00	5.23E-17	1.14E-08	2.22E-14	5.23E-17	1.14E-08	2.22E-14
^{244}Cm	0.00E+00	0.00E+00	0.00E+00	1.57E-17	3.41E-09	1.49E-13	1.57E-17	3.41E-09	1.49E-13
^{247}Cm	0.00E+00	0.00E+00	0.00E+00	1.17E-17	2.56E-09	6.97E-14	1.17E-17	2.56E-09	6.97E-14
^{137}Cs	0.00E+00	0.00E+00	0.00E+00	6.25E-14	1.36E-05	3.46E-10	6.25E-14	1.36E-05	3.46E-10
^{152}Eu	0.00E+00	0.00E+00	0.00E+00	2.73E-18	5.94E-10	7.54E-15	2.73E-18	5.94E-10	7.54E-15
^{154}Eu	0.00E+00	0.00E+00	0.00E+00	2.72E-16	5.93E-08	4.84E-13	2.72E-16	5.93E-08	4.84E-13
^{155}Eu	0.00E+00	0.00E+00	0.00E+00	1.53E-16	3.33E-08	1.51E-13	1.53E-16	3.33E-08	1.51E-13
^{3}H	0.00E+00	0.00E+00	0.00E+00	2.76E-17	6.01E-09	1.38E-15	2.76E-17	6.01E-09	1.38E-15
^{129}I	0.00E+00	0.00E+00	0.00E+00	6.32E-21	1.38E-12	1.72E-11	6.32E-21	1.38E-12	1.72E-11
^{94}Nb	0.00E+00	0.00E+00	0.00E+00	2.71E-17	5.91E-09	2.29E-13	2.71E-17	5.91E-09	2.29E-13
^{93m}Nb	0.00E+00	0.00E+00	0.00E+00	3.86E-19	8.42E-11	2.63E-10	3.86E-19	8.42E-11	2.63E-10
^{238}Pu	0.00E+00	0.00E+00	0.00E+00	1.83E-18	3.98E-10	5.13E-14	1.83E-18	3.98E-10	5.13E-14
^{239}Pu	0.00E+00	0.00E+00	0.00E+00	1.62E-17	3.53E-09	1.25E-10	1.62E-17	3.53E-09	1.25E-10
^{240}Pu	0.00E+00	0.00E+00	0.00E+00	8.88E-19	1.94E-10	1.88E-12	8.88E-19	1.94E-10	1.88E-12
^{241}Pu	0.00E+00	0.00E+00	0.00E+00	1.15E-16	2.50E-08	5.36E-13	1.15E-16	2.50E-08	5.36E-13
^{125}Sb	0.00E+00	0.00E+00	0.00E+00	1.82E-16	3.96E-08	8.41E-14	1.82E-16	3.96E-08	8.41E-14
^{151}Sm	0.00E+00	0.00E+00	0.00E+00	5.65E-16	1.23E-07	1.03E-11	5.65E-16	1.23E-07	1.03E-11
^{126}Sn	0.00E+00	0.00E+00	0.00E+00	8.09E-19	1.76E-10	3.42E-11	8.09E-19	1.76E-10	3.42E-11
^{90}Sr	0.00E+00	0.00E+00	0.00E+00	5.57E-14	1.21E-05	1.94E-10	5.57E-14	1.21E-05	1.94E-10
^{99}Tc	0.00E+00	0.00E+00	0.00E+00	6.59E-16	1.43E-07	1.87E-08	6.59E-16	1.43E-07	1.87E-08
^{232}Th	0.00E+00	0.00E+00	0.00E+00	4.19E-21	9.13E-13	1.83E-08	4.19E-21	9.13E-13	1.83E-08
^{233}U	0.00E+00	0.00E+00	0.00E+00	6.46E-21	1.41E-12	3.22E-13	6.46E-21	1.41E-12	3.22E-13
^{234}U	0.00E+00	0.00E+00	0.00E+00	1.81E-20	3.95E-12	1.40E-12	1.81E-20	3.95E-12	1.40E-12
^{235}U	0.00E+00	0.00E+00	0.00E+00	1.34E-21	2.93E-13	2.99E-10	1.34E-21	2.93E-13	2.99E-10
^{236}U	0.00E+00	0.00E+00	0.00E+00	6.51E-22	1.42E-13	4.83E-12	6.51E-22	1.42E-13	4.83E-12
^{238}U	0.00E+00	0.00E+00	0.00E+00	1.04E-20	2.26E-12	1.48E-08	1.04E-20	2.26E-12	1.48E-08

Component (CAS)	Organic Components mol/L	Lb/gal	Lb/day	Mt/day	g/sec
Total	6.95E-17	1.28E-16	1.01E-08	4.60847E-12	5.33388E-11
57-14-7	2.40E-18	1.20428E-18	6.93E-11	3.15085E-14	3.64661E-13
58-90-2	6.98E-19	1.35051E-18	7.77E-11	3.53344E-14	4.08963E-13
58-89-9	3.27E-20	7.94477E-20	4.57E-12	2.07864E-15	2.40583E-14
71-43-2	3.22E-26	2.10027E-26	1.21E-18	5.49508E-22	6.36005E-21
75-05-8	6.12E-19	2.09804E-19	1.21E-11	5.48924E-15	6.35328E-14
76-44-8	8.18E-23	2.5484E-22	1.47E-14	6.66756E-18	7.71708E-17
79-01-6	1.31E-27	1.44185E-27	8.30E-20	3.7724E-23	4.3662E-22
84-74-2	1.26E-17	2.92357E-17	1.68E-09	7.64493E-13	8.8483E-12
84-66-2	1.24E-18	2.30072E-18	1.32E-10	6.01951E-14	6.96703E-13
87-86-5	1.12E-18	2.4904E-18	1.43E-10	6.51579E-14	7.54143E-13
87-68-3	5.21E-28	1.13471E-27	6.53E-20	2.96882E-23	3.43613E-22
88-85-7	2.12E-17	4.24756E-17	2.44E-09	1.11132E-12	1.28625E-11
91-20-3	1.03E-22	1.09704E-22	6.31E-15	2.87026E-18	3.32206E-17
98-86-2	1.28E-18	1.28432E-18	7.39E-11	3.36025E-14	3.88918E-13
108-95-2	3.11E-18	2.43881E-18	1.40E-10	6.3808E-14	7.38519E-13
108-88-3	1.17E-26	9.02754E-27	5.20E-19	2.36193E-22	2.73372E-21
120-82-1	5.80E-24	8.78998E-24	5.06E-16	2.29978E-19	2.66178E-18
122-66-7	0.00E+00	0	0.00E+00	0	0
122-39-4	2.66E-19	3.79571E-19	2.18E-11	9.82635E-15	1.1379E-13
129-00-0	1.14E-17	1.93051E-17	1.11E-09	5.05092E-13	5.84597E-12
132-64-9	2.13E-20	2.99231E-20	1.72E-12	7.82896E-16	9.0613E-15
218-01-9	1.21E-17	2.31131E-17	1.33E-09	6.04723E-13	6.99913E-12
309-00-2	4.47E-20	1.3608E-19	7.83E-12	3.56034E-15	4.12076E-14
319-85-7	5.17E-20	1.2538E-19	7.22E-12	3.28039E-15	3.79674E-14
534-52-1	0.00E+00	0	0.00E+00	0	0
603-34-9	7.49E-19	1.53396E-18	8.83E-11	4.01339E-14	4.64532E-13
4170-30-3	4.95E-19	2.89734E-19	1.67E-11	7.58049E-15	8.77372E-14
10061-01-5	5.93E-25	5.4935E-25	3.16E-17	1.4373E-20	1.66354E-19
38380-08-4	3.11E-20	9.36798E-20	5.39E-12	2.451E-15	2.83681E-14
100-21-0	1.78E-18	2.47412E-18	1.42E-10	6.47321E-14	7.49214E-13
106-93-4	4.91E-22	7.69733E-22	4.43E-14	2.0139E-17	2.33091E-16
106-97-8	0.00E+00	0	0.00E+00	0	0
106-99-0	1.54E-31	6.97182E-32	4.01E-24	1.82408E-27	2.11121E-26
108-87-2	0.00E+00	0	0.00E+00	0	0
110-54-3	0.00E+00	0	0.00E+00	0	0
110-82-7	5.85E-40	4.11008E-40	2.37E-32	1.07535E-35	1.24462E-34
111-84-2	0.00E+00	0	0.00E+00	0	0
118-74-1	1.69E-25	4.07482E-25	2.32E-17	1.05304E-20	1.2188E-19
120-12-7	2.74E-19	4.07823E-19	2.35E-11	1.06701E-14	1.23497E-13
127-18-4	5.91E-29	8.17805E-29	4.71E-21	2.13968E-24	2.47648E-23
1336-36-3	1.41E-19	3.7891E-19	2.18E-11	9.91367E-15	1.14742E-13
144-62-7	3.50E-19	2.47942E-19	1.43E-11	6.48705E-15	7.50816E-14
208-96-8	1.02E-19	1.30128E-19	7.49E-12	3.40463E-15	3.94055E-14
50-32-8	2.22E-19	4.66816E-19	2.69E-11	1.22136E-14	1.41361E-13
56-23-5	7.07E-30	9.08211E-30	5.23E-22	2.37621E-25	2.75024E-24
60-35-5	1.11E-18	5.48471E-19	3.16E-11	1.43487E-14	1.66073E-13
60-57-1	4.42E-20	1.40528E-19	8.09E-12	3.67673E-15	4.25548E-14
62-75-9	5.80E-18	3.58711E-18	2.06E-10	9.38508E-14	1.08625E-12
75-12-7	6.57E-18	2.47138E-18	1.42E-10	6.46603E-14	7.48383E-13
76-15-3	0.00E+00	0	0.00E+00	0	0
8001-35-2	5.23E-20	1.80586E-19	1.04E-11	4.72479E-15	5.46851E-14
88-89-1	1.94E-17	3.70493E-17	2.13E-09	9.69346E-13	1.12193E-11
126-73-8	1.13E-18	2.50794E-18	1.44E-10	6.5617E-14	7.59456E-13

River Protection Project - Waste Treatment Plant

Stream Number: PVP12
Stream Name: Carbon bed adsorber discharge
Run Data File: H:\Working Folder 11 (Vishal)\Emissions_Case2_Run4_SubEm\MRQ_03_054_run1_Streams.csv
Run Date / Time: 4/15/2003 - 6:40:10 AM

Stream Properties		
Variable	Value	Units
Density	1.10E-03	g/cm³
Enthalpy	-1.25E-06	BTU/hr
Mass Flow	1.12E+04	Lb/hr
	2.69E+05	Lb/day
Volumetric Flow	2.02E+04	GPM
Molar Flow	3.93E+02	Lbmol/hr
Volumetric Flow	2.70E+03	ft³/min
Molecular Weight	2.85E+01	Lb/Lbmol
Pressure	1.00E+03	mbar
Temperature	3.73E+01	C
Viscosity	1.88E-02	cP
Na Molarity	0.00E+00	mol/L
pH	N/A	pH
Total TRU	3.15E-19	Ci/L
Total Activity	2.39E-09	Ci/L

Gaseous Components (1)			
Component	mol/L	Lb/day	Mt/day
CO	5.83E-28	3.97E-21	1.80462E-24
CO_2	1.39E-07	1.49E+00	0.00067671
H_2O	1.24E-03	5.43E+03	2.469914038
NO	4.16E-33	3.04E-26	1.38037E-29
NO_2	1.81E-23	2.02E-16	9.20176E-20
N_2	2.96E-02	2.02E+05	91.76572806
O_2	7.88E-03	6.13E+04	27.85029503
SO_2	9.68E-29	1.51E-21	6.85088E-25
NH_3	2.44E-08	1.01E-01	4.5955E-05
HNO_3	5.46E-10	8.37E-03	3.80448E-06
HCl	7.17E-32	6.36E-25	2.88946E-28
HF	5.67E-32	2.76E-25	1.25383E-28

(1) All radionuclides in gaseous streams are assumed to exist as solid particulate.

Component	Aqueous Components mol/L	Lb/gal	Lb/day	Solid Components Lb/day	Total Component Lb/day	Solid Components mt/day	Total Component g/sec
Total	0.00E+00	0.00E+00	0.00E+00	2.65E-04	2.65E-04	1.20611E-07	1.39596E-06
Ag^+	0.00E+00	0.00E+00	0.00E+00	9.74E-13	9.74E-13	4.42849E-16	5.12557E-15
Al^{+3}	0.00E+00	0.00E+00	0.00E+00	2.02E-10	2.02E-10	9.18774E-14	1.0634E-12
As^{+3}	0.00E+00	0.00E+00	0.00E+00	2.55E-10	2.55E-10	1.16004E-13	1.34264E-12
B^{+3}	0.00E+00	0.00E+00	0.00E+00	7.30E-12	7.30E-12	3.31772E-15	3.83995E-14
Ba^{+2}	0.00E+00	0.00E+00	0.00E+00	4.87E-12	4.87E-12	2.21539E-15	2.5641E-14
Bi^{+3}	0.00E+00	0.00E+00	0.00E+00	2.69E-12	2.69E-12	1.22311E-15	1.41564E-14
CrO_4^{-2}	0.00E+00	0.00E+00	0.00E+00	2.75E-12	2.75E-12	1.2502E-15	1.44699E-14
Ca^{+2}	0.00E+00	0.00E+00	0.00E+00	6.91E-10	6.91E-10	3.14193E-13	3.63649E-12
Cd^{+2}	0.00E+00	0.00E+00	0.00E+00	1.36E-11	1.36E-11	6.18083E-15	7.15059E-14
Ce^{+3}	0.00E+00	0.00E+00	0.00E+00	4.32E-12	4.32E-12	1.96561E-15	2.27501E-14
Cl^-	0.00E+00	0.00E+00	0.00E+00	4.36E-11	4.36E-11	1.98358E-14	2.29581E-13
CO_3^{-2}	0.00E+00	0.00E+00	0.00E+00	4.61E-10	4.61E-10	2.09565E-13	2.42552E-12
Cr^{+3}	0.00E+00	0.00E+00	0.00E+00	2.37E-11	2.37E-11	1.07578E-14	1.24511E-13
Cu^{+2}	0.00E+00	0.00E+00	0.00E+00	9.24E-13	9.24E-13	4.19846E-16	4.85933E-15
F^-	0.00E+00	0.00E+00	0.00E+00	5.04E-11	5.04E-11	2.29221E-14	2.65303E-13
Fe^{+3}	0.00E+00	0.00E+00	0.00E+00	4.79E-11	4.79E-11	2.1787E-14	2.52165E-13
H^+	0.00E+00	0.00E+00	0.00E+00		0.00E+00	0	0
H_2O	0.00E+00	0.00E+00	0.00E+00		0.00E+00	0	0
Hg^{+2}	0.00E+00	0.00E+00	0.00E+00	2.65E-04	2.65E-04	1.20609E-07	1.39594E-06
K^+	0.00E+00	0.00E+00	0.00E+00	1.78E-10	1.78E-10	8.11116E-14	9.38791E-13
La^{+3}	0.00E+00	0.00E+00	0.00E+00	2.71E-12	2.71E-12	1.23223E-15	1.4262E-14
Li^+	0.00E+00	0.00E+00	0.00E+00	1.05E-12	1.05E-12	4.77257E-16	5.52383E-15
Mg^{+2}	0.00E+00	0.00E+00	0.00E+00	2.61E-11	2.61E-11	1.18803E-14	1.37504E-13
Mn^{+2}	0.00E+00	0.00E+00	0.00E+00	1.45E-11	1.45E-11	6.58744E-15	7.62435E-14
MnO_4^-	0.00E+00	0.00E+00	0.00E+00		0.00E+00	0	0
Na^+	0.00E+00	0.00E+00	0.00E+00	6.96E-10	6.96E-10	3.1654E-13	3.66366E-12
NH_4^+	0.00E+00	0.00E+00	0.00E+00	0.00E+00	0.00E+00	0	0
Ni^{+2}	0.00E+00	0.00E+00	0.00E+00	5.52E-12	5.52E-12	2.50873E-15	2.90362E-14
NO_2^-	0.00E+00	0.00E+00	0.00E+00	2.06E-10	2.06E-10	9.3574E-14	1.08303E-12
NO_3^-	0.00E+00	0.00E+00	0.00E+00	1.10E-09	1.10E-09	4.99572E-13	5.78209E-12
O^{-2}				1.03E-10	1.03E-10	4.69001E-14	5.42825E-13
OH^-	0.00E+00	0.00E+00	0.00E+00	8.22E-10	8.22E-10	3.73659E-13	4.32476E-12
OH(b)	0.00E+00	0.00E+00	0.00E+00		0.00E+00	0	0
P^{+5}				9.14E-17	9.14E-17	4.15479E-20	4.80878E-19
Pb^{+2}	0.00E+00	0.00E+00	0.00E+00	3.83E-12	3.83E-12	1.73891E-15	2.01263E-14
Pd^{+2}	0.00E+00	0.00E+00	0.00E+00	1.01E-13	1.01E-13	4.58673E-17	5.30871E-16
PO_4^{-3}	0.00E+00	0.00E+00	0.00E+00	2.07E-10	2.07E-10	9.38655E-14	1.08641E-12
S^{-2}				2.05E-13	2.05E-13	9.31857E-17	1.07854E-15
Si^{+4}				3.72E-11	3.72E-11	1.69299E-14	1.95948E-13
SiO_4^{-4}	0.00E+00	0.00E+00	0.00E+00		0.00E+00	0	0
SO_4^{-2}	0.00E+00	0.00E+00	0.00E+00	8.43E-11	8.43E-11	3.83254E-14	4.43581E-13
Sr^{+2}	0.00E+00	0.00E+00	0.00E+00	4.18E-13	4.18E-13	1.90004E-16	2.19912E-15
Ti^{+4}	0.00E+00	0.00E+00	0.00E+00	5.70E-12	5.70E-12	2.59047E-15	2.99823E-14
Zn^{+2}	0.00E+00	0.00E+00	0.00E+00	2.01E-12	2.01E-12	9.14137E-16	1.05803E-14
Zr^{+4}	0.00E+00	0.00E+00	0.00E+00	1.59E-11	1.59E-11	7.22523E-15	8.36253E-14

Rad. Component	Aqueous Rad. Components			Solids Rad. Components (1)			Total Rad. Components (1)		
	Ci/L	Ci/day	Lb/day	Ci/L	Ci/day	Lb/day	Ci/L	Ci/day	Lb/day
Total	0.00E+00	0.00E+00	0.00E+00	2.39E-09	2.63E-01	8.87E-07	2.39E-09	2.63E-01	8.87E-07
^{241}Am	0	0.00E+00	0.00E+00	2.30E-19	2.54E-11	1.63E-14	2.30E-19	2.54E-11	1.63E-14
^{14}C	0.00E+00	0.00E+00	0.00E+00	1.25E-13	1.38E-05	6.81E-09	1.25E-13	1.38E-05	6.81E-09
^{48}Ca	0.00E+00	0.00E+00	0.00E+00	3.79E-20	4.18E-12	8.14E-18	3.79E-20	4.18E-12	8.14E-18
^{243}Cm	0.00E+00	0.00E+00	0.00E+00	1.10E-20	1.21E-12	5.28E-17	1.10E-20	1.21E-12	5.28E-17
^{244}Cm	0.00E+00	0.00E+00	0.00E+00	8.24E-21	9.08E-13	2.47E-17	8.24E-21	9.08E-13	2.47E-17
^{137}Cs	0.00E+00	0.00E+00	0.00E+00	4.11E-17	4.53E-09	1.15E-13	4.11E-17	4.53E-09	1.15E-13
^{152}Eu	0.00E+00	0.00E+00	0.00E+00	4.44E-21	4.90E-13	6.22E-18	4.44E-21	4.90E-13	6.22E-18
^{154}Eu	0.00E+00	0.00E+00	0.00E+00	1.43E-19	1.58E-11	1.29E-16	1.43E-19	1.58E-11	1.29E-16
^{155}Eu	0.00E+00	0.00E+00	0.00E+00	9.23E-20	1.02E-11	4.62E-17	9.23E-20	1.02E-11	4.62E-17
^{3}H	0.00E+00	0.00E+00	0.00E+00	2.39E-09	2.63E-01	6.04E-08	2.39E-09	2.63E-01	6.04E-08
^{129}I	0.00E+00	0.00E+00	0.00E+00	5.96E-16	6.57E-08	8.20E-07	5.96E-16	6.57E-08	8.20E-07
^{59}Ni	0.00E+00	0.00E+00	0.00E+00	1.83E-20	2.01E-12	7.82E-17	1.83E-20	2.01E-12	7.82E-17
^{237}Np	0.00E+00	0.00E+00	0.00E+00	2.74E-22	3.02E-14	9.44E-14	2.74E-22	3.02E-14	9.44E-14
^{238}Pu	0.00E+00	0.00E+00	0.00E+00	8.97E-22	9.89E-14	1.27E-17	8.97E-22	9.89E-14	1.27E-17
^{239}Pu	0.00E+00	0.00E+00	0.00E+00	7.96E-21	8.78E-13	3.12E-14	7.96E-21	8.78E-13	3.12E-14
^{240}Pu	0.00E+00	0.00E+00	0.00E+00	4.44E-22	4.89E-14	4.75E-16	4.44E-22	4.89E-14	4.75E-16
^{241}Pu	0.00E+00	0.00E+00	0.00E+00	5.63E-20	6.21E-12	1.33E-16	5.63E-20	6.21E-12	1.33E-16
^{125}Sb	0.00E+00	0.00E+00	0.00E+00	1.32E-19	1.45E-11	3.08E-17	1.32E-19	1.45E-11	3.08E-17
^{151}Sm	0.00E+00	0.00E+00	0.00E+00	8.66E-19	9.55E-11	8.00E-15	8.66E-19	9.55E-11	8.00E-15
^{126}Sn	0.00E+00	0.00E+00	0.00E+00	7.54E-22	8.31E-14	1.61E-14	7.54E-22	8.31E-14	1.61E-14
^{90}Sr	0.00E+00	0.00E+00	0.00E+00	2.76E-17	3.04E-09	4.86E-14	2.76E-17	3.04E-09	4.86E-14
^{99}Tc	0.00E+00	0.00E+00	0.00E+00	1.04E-19	1.15E-11	1.49E-12	1.04E-19	1.15E-11	1.49E-12
^{232}Th	0.00E+00	0.00E+00	0.00E+00	4.80E-24	5.29E-16	1.06E-11	4.80E-24	5.29E-16	1.06E-11
^{233}U	0.00E+00	0.00E+00	0.00E+00	3.90E-23	4.30E-15	9.85E-16	3.90E-23	4.30E-15	9.85E-16
^{234}U	0.00E+00	0.00E+00	0.00E+00	5.28E-23	3.61E-15	1.28E-15	5.28E-23	3.61E-15	1.28E-15
^{235}U	0.00E+00	0.00E+00	0.00E+00	1.72E-24	1.89E-16	1.93E-13	1.72E-24	1.89E-16	1.93E-13
^{236}U	0.00E+00	0.00E+00	0.00E+00	2.78E-24	3.06E-16	1.04E-14	2.78E-24	3.06E-16	1.04E-14
^{238}U	0.00E+00	0.00E+00	0.00E+00	2.22E-23	2.45E-15	1.61E-11	2.22E-23	2.45E-15	1.61E-11

Component (CAS)	Organic Components mol/L	Lb/gal	Lb/day	Mt/day	g/sec
Total	2.99E-09	3.60E-09	2.69E+00	0.001221257	0.01413492
57-14-7	6.37E-12	3.19699E-12	9.31E-05	4.23276E-08	4.89903E-07
58-90-2	3.68E-10	7.12351E-10	2.07E-02	9.43142E-06	0.00010916
58-89-9	1.07E-21	2.59207E-21	7.55E-14	3.43386E-17	3.97206E-16
71-43-2	7.70E-10	5.01632E-10	1.46E-02	6.64153E-06	7.68894E-05
75-05-8	6.86E-11	2.35079E-11	6.85E-04	3.11241E-07	3.60233E-06
76-44-8	4.22E-11	1.31528E-10	3.83E-03	1.74142E-06	2.01553E-05
79-01-6	4.57E-12	5.01436E-12	1.46E-04	6.63894E-08	7.68395E-07
84-74-2	4.57E-22	1.06049E-21	3.09E-14	1.40404E-17	1.62505E-16
84-66-2	2.79E-14	5.37843E-14	1.51E-06	6.85616E-10	7.93537E-09
87-86-5	3.78E-13	8.40661E-13	2.45E-05	1.11302E-08	1.28822E-07
87-68-3	9.24E-11	2.00968E-10	5.85E-03	2.66095E-06	3.0798E-05
88-85-7	6.04E-20	1.21066E-19	3.53E-12	1.60282E-15	1.85511E-14
91-20-3	3.34E-12	3.57381E-12	1.04E-04	4.73167E-08	5.47647E-07
98-86-2	1.36E-10	1.36451E-10	3.97E-03	1.80659E-06	2.09096E-05
108-95-2	5.01E-12	3.93739E-12	1.15E-04	5.21304E-08	6.03361E-07
108-88-3	6.54E-12	5.02578E-12	1.46E-04	6.65405E-08	7.70145E-07
120-82-1	6.60E-11	1.00007E-10	2.91E-03	1.32408E-06	1.5325E-05
122-66-7	0.00E+00	0	0.00E+00	0	0
122-39-4	6.49E-12	9.17046E-12	2.67E-04	1.21415E-07	1.40527E-06
129-00-0	9.35E-19	1.5779E-18	4.60E-11	2.08911E-14	2.41795E-13
132-64-9	8.29E-10	1.16362E-09	3.39E-02	1.54061E-05	0.000178312
218-01-9	3.97E-19	7.59053E-19	2.21E-11	1.00233E-14	1.1601E-13
309-00-2	1.02E-19	3.13039E-19	9.06E-12	4.3181E-15	4.79632E-14
319-85-7	1.49E-22	3.6216E-22	1.05E-14	4.79494E-18	5.5497E-17
534-52-1	0.00E+00	0	0.00E+00	0	0
603-34-9	4.54E-11	9.28926E-11	2.71E-03	1.22988E-06	1.42348E-05
4170-30-3	9.70E-13	5.67455E-13	1.65E-05	7.51301E-09	8.69562E-08
10061-01-5	5.44E-10	5.03525E-10	1.47E-02	6.66659E-06	7.71596E-05
38380-08-4	1.15E-21	3.45538E-21	1.01E-13	4.57488E-17	5.29498E-16
100-21-0	1.43E-16	1.98732E-16	5.79E-09	2.63118E-12	3.04535E-11
106-93-4	1.42E-08	2.22638E-08	6.48E-01	0.00029477	0.003411684
106-97-8	1.04E-11	5.03978E-12	1.47E-04	6.65936E-08	7.70759E-07
106-99-0	1.11E-11	5.02975E-12	1.47E-04	6.65931E-08	7.70754E-07
108-87-2	6.12E-12	5.01369E-12	1.46E-04	6.63805E-08	7.68292E-07
110-54-3	6.99E-12	5.0257E-12	1.46E-04	6.65395E-08	7.70133E-07
110-82-7	7.15E-12	5.02172E-12	1.46E-04	6.64802E-08	7.69446E-07
111-84-2	2.35E-12	2.51628E-12	7.33E-05	3.33152E-08	3.85593E-07
118-74-1	1.22E-11	2.89168E-11	8.42E-04	3.82854E-07	4.43119E-06
120-12-7	1.43E-11	2.12067E-11	6.18E-04	2.80773E-07	3.24969E-06
127-18-4	3.64E-09	5.03659E-09	1.47E-01	6.66837E-05	0.000771802
1336-36-3	6.45E-18	1.73428E-17	5.05E-10	2.29615E-13	2.65759E-12
144-62-7	6.87E-16	5.15933E-16	1.50E-08	6.83087E-12	7.9061E-11
208-96-8	7.44E-10	9.4451E-10	2.75E-02	1.25052E-05	0.000144736
50-32-8	6.58E-22	1.18444E-21	4.03E-14	1.83297E-17	2.1219E-16
56-23-5	7.86E-09	1.0088E-08	2.94E-01	0.000133563	0.00154587
60-35-5	1.45E-15	7.14165E-16	2.08E-08	9.45543E-12	1.09438E-10
60-57-1	2.96E-21	9.41994E-21	2.74E-13	1.24719E-16	1.4435E-15
62-75-9	1.87E-12	1.15527E-12	3.37E-05	1.52956E-08	1.77033E-07
75-12-7	2.31E-15	8.29107E-16	2.41E-08	1.09772E-11	1.27051E-10
76-15-3	3.90E-08	5.02314E-08	1.46E+00	0.000665055	0.0076974
8001-35-2	2.01E-21	6.93954E-21	2.02E-13	9.18784E-17	1.06341E-15
88-89-1	3.54E-26	6.76708E-26	1.97E-18	8.95951E-22	1.03698E-20
126-73-8	7.07E-15	1.57135E-14	4.58E-07	2.08044E-10	2.40792E-09

River Protection Project - Waste Treatment Plant

Stream Number: PJV11
Stream Name: HEPA discharge
Run Data File: H:\Working Folder 11 (Vishal)\Emissions_Case2_Run4_SubEm\WRQ_03_054_run1_Streams.csv
Run Date / Time: 4/15/2003 - 6:40:10 AM

Stream Properties		
Variable	Value	Units
Density	1.15E-03	g/cm³
Enthalpy	-8.44E-06	BTU/hr
Mass Flow	1.68E-05	Lb/hr
	3.99E-06	Lb/day
Volumetric Flow	2.88E-05	GPM
Molar Flow	5.79E-03	Lbmol/hr
Volumetric Flow	3.85E-04	ft³/min
Molecular Weight	2.87E+01	Lb/Lbmol
Pressure	1.00E-03	atmos
Temperature	2.57E+01	C
Viscosity	1.84E-02	cP
Na Molarity	0.00E+00	mol/L
pH	N/A	pH
Total TRU	4.97E-17	Ci/L
Total Activity	6.01E-13	Ci/L

Gaseous Components (1)			
Component	mol/L	Lb/day	Mt/day
CO	1.09E-27	1.06E-39	4.81932E-23
CO_2	4.93E-13	7.50E-05	3.40721E-08
H_2O	5.89E-04	3.55E-04	16.13505687
NO	1.05E-32	1.06E-24	4.82498E-28
NO_2	2.81E-34	4.47E-26	2.03382E-29
H_2	3.13E-02	3.03E-06	1378.323747
O_2	8.31E-03	9.21E-05	418.5140782
SO_2	1.15E-30	2.54E-22	1.15559E-25
NH_3	4.34E-11	2.56E-03	1.16457E-06
HNO_3	2.15E-11	4.68E-03	2.12863E-06
HCl	2.77E-40	3.50E-32	1.59158E-35
HF	3.35E-59	2.21E-51	1.00665E-54

(1) All radionuclides in gaseous streams are assumed to exist as solid particulate.

Component	Aqueous Components mol/L	Lb/gal	Lb/day	Solid Components Lb/day	Total Component Lb/day	Solid Components mt/day	Total Component g/sec
Total	0.00E+00	0.00E+00	0.00E+00	3.66E-03	3.66E-03	1.66054E-06	1.93754E-05
Ag^+	0.00E+00	0.00E+00	0.00E+00	1.19E-09	1.19E-09	5.40202E-13	6.26188E-12
Al^{+3}	0.00E+00	0.00E+00	0.00E+00	2.17E-07	2.17E-07	9.8667E-11	1.14198E-09
As^{+3}	0.00E+00	0.00E+00	0.00E+00	4.63E-07	4.63E-07	2.10383E-10	2.43499E-09
B^{+3}	0.00E+00	0.00E+00	0.00E+00	7.11E-09	7.11E-09	3.23396E-12	3.74301E-11
Ba^{+2}	0.00E+00	0.00E+00	0.00E+00	6.83E-09	6.83E-09	3.10419E-12	3.59281E-11
Br^{-1}	0.00E+00	0.00E+00	0.00E+00	5.23E-09	5.23E-09	2.37877E-12	2.75331E-11
CrO_4^{-2}	0.00E+00	0.00E+00	0.00E+00	6.32E-07	6.32E-07	2.87319E-10	3.32545E-09
Ca^{+2}	0.00E+00	0.00E+00	0.00E+00	5.81E-08	5.81E-08	2.64153E-11	3.05733E-10
Cd^{+2}	0.00E+00	0.00E+00	0.00E+00	2.07E-08	2.07E-08	9.3864E-12	1.08639E-10
Ce^{+3}	0.00E+00	0.00E+00	0.00E+00	4.79E-09	4.79E-09	2.17732E-12	2.52004E-11
Cl^-	0.00E+00	0.00E+00	0.00E+00	5.16E-08	5.16E-08	2.34658E-11	2.71593E-10
CO_3^{-2}	0.00E+00	0.00E+00	0.00E+00	3.12E-07	3.12E-07	1.41932E-10	1.64273E-09
Cr^{+3}	0.00E+00	0.00E+00	0.00E+00	3.14E-08	3.14E-08	1.42677E-11	1.65135E-10
Cu^{+2}	0.00E+00	0.00E+00	0.00E+00	1.09E-09	1.09E-09	4.96037E-13	5.74117E-12
F^-	0.00E+00	0.00E+00	0.00E+00	6.86E-08	6.86E-08	3.11823E-11	3.60906E-10
Fe^{+3}	0.00E+00	0.00E+00	0.00E+00	5.81E-08	5.81E-08	2.64126E-11	3.05702E-10
H^+	0.00E+00	0.00E+00	0.00E+00		0.00E+00	0	0
H_2O	0.00E+00	0.00E+00	0.00E+00		0.00E+00	0	0
Hg^{+2}	0.00E+00	0.00E+00	0.00E+00	3.66E-03	3.66E-03	1.66269E-06	1.92441E-05
K^+	0.00E+00	0.00E+00	0.00E+00	2.10E-07	2.10E-07	9.54339E-11	1.10454E-09
La^{+3}	0.00E+00	0.00E+00	0.00E+00	4.10E-09	4.10E-09	1.86138E-12	2.15437E-11
Li^+	0.00E+00	0.00E+00	0.00E+00	1.48E-09	1.48E-09	6.74453E-13	7.80617E-12
Mg^{+2}	0.00E+00	0.00E+00	0.00E+00	4.40E-09	4.40E-09	1.99915E-12	2.31383E-11
Mn^{+2}	0.00E+00	0.00E+00	0.00E+00	1.71E-08	1.71E-08	7.79026E-12	9.01651E-11
MnO_4^-	0.00E+00	0.00E+00	0.00E+00		0.00E+00	0	0
Na^+	0.00E+00	0.00E+00	0.00E+00	7.46E-07	7.46E-07	3.39074E-10	3.92447E-09
NH_4^+	0.00E+00	0.00E+00	0.00E+00	0.00E+00	0.00E+00	0	0
Ni^{+2}	0.00E+00	0.00E+00	0.00E+00	8.61E-09	8.61E-09	3.91324E-12	4.52921E-11
NO_3^-	0.00E+00	0.00E+00	0.00E+00	2.70E-07	2.70E-07	1.22849E-10	1.42187E-09
NO_2^-	0.00E+00	0.00E+00	0.00E+00	1.42E-06	1.42E-06	6.47557E-10	7.49499E-09
O^{-2}				1.64E-07	1.64E-07	7.46284E-11	8.63755E-10
OH^-	0.00E+00	0.00E+00	0.00E+00	7.99E-07	7.99E-07	3.63358E-10	4.20553E-09
$OH(g)$	0.00E+00	0.00E+00	0.00E+00		0.00E+00	0	0
P^{+5}				5.39E-16	5.39E-16	2.44955E-19	2.83509E-18
Pb^{+2}	0.00E+00	0.00E+00	0.00E+00	5.67E-09	5.67E-09	2.57660E-12	2.98279E-11
PO_4^{-3}	0.00E+00	0.00E+00	0.00E+00	2.09E-10	2.09E-10	9.5195E-14	1.10179E-12
HPO_4^{-2}	0.00E+00	0.00E+00	0.00E+00	1.98E-07	1.98E-07	9.00342E-11	1.04206E-09
S^{-2}				1.64E-15	1.64E-15	7.43287E-19	8.60286E-18
Sr^{+2}				3.32E-08	3.32E-08	1.50745E-11	1.74473E-10
SiO_4^{-4}	0.00E+00	0.00E+00	0.00E+00		0.00E+00	0	0
SO_4^{-2}	0.00E+00	0.00E+00	0.00E+00	1.03E-07	1.03E-07	4.66899E-11	5.40161E-10
Sn^{+2}	0.00E+00	0.00E+00	0.00E+00	8.67E-10	8.67E-10	3.93912E-13	4.55917E-12
Ti^{+4}	0.00E+00	0.00E+00	0.00E+00	5.26E-09	5.26E-09	2.39152E-12	2.76796E-11
Zn^{+2}	0.00E+00	0.00E+00	0.00E+00	2.03E-09	2.03E-09	9.22883E-13	1.06825E-11
Zr^{+4}	0.00E+00	0.00E+00	0.00E+00	2.24E-08	2.24E-08	1.01673E-11	1.17744E-10

Rad. Component	Aqueous Rad. Components			Solids Rad. Components (1)			Total Rad. Components (1)		
	Ci/L	Ci/day	Lb/day	Ci/L	Ci/day	Lb/day	Ci/L	Ci/day	Lb/day
Total	0.00E+00	0.00E+00	0.00E+00	6.01E-13	9.44E-04	1.63E-05	6.01E-13	9.44E-04	1.63E-05
^{241}Am	0	0.00E+00	0.00E+00	3.70E-17	5.81E-08	3.74E-11	3.70E-17	5.81E-08	3.74E-11
^{14}C	0.00E+00	0.00E+00	0.00E+00	6.26E-14	9.84E-05	4.86E-08	6.26E-14	9.84E-05	4.86E-08
^{93}Cb	0.00E+00	0.00E+00	0.00E+00	4.18E-18	6.57E-09	1.28E-14	4.18E-18	6.57E-09	1.28E-14
^{247}Cm	0.00E+00	0.00E+00	0.00E+00	1.23E-18	1.93E-09	8.43E-14	1.23E-18	1.93E-09	8.43E-14
^{244}Cm	0.00E+00	0.00E+00	0.00E+00	9.22E-19	1.45E-09	3.95E-14	9.22E-19	1.45E-09	3.95E-14
^{137}Cs	0.00E+00	0.00E+00	0.00E+00	4.85E-15	7.62E-06	1.94E-10	4.85E-15	7.62E-06	1.94E-10
^{152}Eu	0.00E+00	0.00E+00	0.00E+00	4.93E-19	7.74E-10	9.82E-15	4.93E-19	7.74E-10	9.82E-15
^{154}Eu	0.00E+00	0.00E+00	0.00E+00	2.23E-17	3.50E-08	2.86E-13	2.23E-17	3.50E-08	2.86E-13
^{155}Eu	0.00E+00	0.00E+00	0.00E+00	1.36E-17	2.13E-08	9.68E-14	1.36E-17	2.13E-08	9.68E-14
^{3}H	0.00E+00	0.00E+00	0.00E+00	5.28E-13	8.30E-04	1.90E-10	5.28E-13	8.30E-04	1.90E-10
^{129}I	0.00E+00	0.00E+00	0.00E+00	8.26E-16	1.30E-06	1.62E-05	8.26E-16	1.30E-06	1.62E-05
^{93}Nb	0.00E+00	0.00E+00	0.00E+00	2.50E-18	3.92E-09	1.52E-13	2.50E-18	3.92E-09	1.52E-13
^{237}Np	0.00E+00	0.00E+00	0.00E+00	3.05E-20	4.79E-11	1.50E-10	3.05E-20	4.79E-11	1.50E-10
^{239}Pu	0.00E+00	0.00E+00	0.00E+00	1.44E-19	2.26E-10	2.91E-14	1.44E-19	2.26E-10	2.91E-14
^{238}Pu	0.00E+00	0.00E+00	0.00E+00	1.28E-18	2.01E-09	7.13E-11	1.28E-18	2.01E-09	7.13E-11
^{240}Pu	0.00E+00	0.00E+00	0.00E+00	7.07E-20	1.11E-10	1.08E-12	7.07E-20	1.11E-10	1.08E-12
^{241}Pu	0.00E+00	0.00E+00	0.00E+00	9.05E-18	1.42E-08	3.04E-13	9.05E-18	1.42E-08	3.04E-13
^{125}Sb	0.00E+00	0.00E+00	0.00E+00	1.77E-17	2.79E-08	5.92E-14	1.77E-17	2.79E-08	5.92E-14
^{151}Sm	0.00E+00	0.00E+00	0.00E+00	9.72E-17	1.53E-07	1.28E-11	9.72E-17	1.53E-07	1.28E-11
^{126}Sn	0.00E+00	0.00E+00	0.00E+00	9.55E-20	1.50E-10	2.91E-11	9.55E-20	1.50E-10	2.91E-11
^{90}Sr	0.00E+00	0.00E+00	0.00E+00	4.31E-15	6.77E-06	1.08E-10	4.31E-15	6.77E-06	1.08E-10
^{99}Tc	0.00E+00	0.00E+00	0.00E+00	1.17E-17	1.84E-08	2.40E-09	1.17E-17	1.84E-08	2.40E-09
^{232}Th	0.00E+00	0.00E+00	0.00E+00	4.48E-22	7.03E-13	1.41E-08	4.48E-22	7.03E-13	1.41E-08
^{233}U	0.00E+00	0.00E+00	0.00E+00	2.71E-21	4.25E-12	9.73E-13	2.71E-21	4.25E-12	9.73E-13
^{234}U	0.00E+00	0.00E+00	0.00E+00	2.70E-21	4.24E-12	1.51E-12	2.70E-21	4.24E-12	1.51E-12
^{235}U	0.00E+00	0.00E+00	0.00E+00	1.55E-22	2.44E-13	2.49E-10	1.55E-22	2.44E-13	2.49E-10
^{236}U	0.00E+00	0.00E+00	0.00E+00	1.99E-22	3.13E-13	1.07E-11	1.99E-22	3.13E-13	1.07E-11
^{238}U	0.00E+00	0.00E+00	0.00E+00	1.77E-21	2.78E-12	1.82E-08	1.77E-21	2.78E-12	1.82E-08

Component (CAS)	Organic Components				
	mol/L	Lb/gal	Lb/day	Mt/day	g/sec
Total	5.37E-12	6.04E-12	4.79E-03	2.17506E-06	2.51743E-05
57-14-7	9.58E-13	4.80315E-13	1.99E-04	9.06058E-08	1.04868E-06
58-90-2	2.60E-13	5.03131E-13	2.09E-04	9.49096E-08	1.09849E-06
58-89-9	9.86E-22	2.39248E-21	9.93E-13	4.51313E-16	5.22353E-15
71-43-2	5.52E-14	3.59684E-14	1.49E-05	6.78502E-09	7.85303E-08
75-05-8	3.74E-13	1.28218E-13	5.32E-05	2.41868E-08	2.7994E-07
76-44-8	1.51E-15	4.71165E-15	1.96E-06	8.88798E-10	1.0287E-08
79-01-6	3.25E-14	3.56269E-14	1.48E-05	6.72059E-09	7.77846E-08
84-74-2	3.72E-19	8.64143E-19	3.59E-10	1.6301E-13	1.8867E-12
84-66-2	4.74E-13	8.79749E-13	3.65E-04	1.65954E-07	1.92077E-06
87-86-5	5.82E-13	1.29369E-12	5.37E-04	2.44039E-07	2.82452E-06
87-68-3	1.64E-14	3.56778E-14	1.48E-05	6.7302E-09	7.78958E-08
88-85-7	7.32E-19	1.46741E-18	6.09E-10	2.7681E-13	3.20181E-12
91-20-3	6.23E-15	6.6603E-15	2.76E-06	1.25639E-09	1.45415E-08
98-86-2	4.90E-13	4.92365E-13	2.04E-04	9.28789E-08	1.07499E-06
108-95-2	1.29E-12	1.01219E-12	4.20E-04	1.90937E-07	2.20992E-06
108-88-3	4.67E-14	3.59107E-14	1.49E-05	6.77413E-09	7.84043E-08
120-82-1	2.52E-14	3.81574E-14	1.58E-05	7.19794E-09	8.33095E-08
122-66-7	0.00E+00	0	0.00E+00	0	0
122-39-4	9.13E-14	1.28988E-13	5.35E-05	2.43321E-08	2.81622E-07
129-00-0	3.82E-19	6.44867E-19	2.68E-10	1.21647E-13	1.40795E-12
132-64-9	1.73E-13	2.42973E-13	1.01E-04	4.5834E-08	5.30484E-07
218-01-9	3.63E-19	6.91738E-19	2.87E-10	1.30488E-13	1.51028E-12
309-00-2	2.58E-21	7.86374E-21	3.26E-12	1.4834E-15	1.7169E-14
319-85-7	1.77E-21	4.29791E-21	1.78E-12	8.10749E-16	9.38367E-15
534-52-1	0.00E+00	0	0.00E+00	0	0
603-34-9	2.63E-13	5.39063E-13	2.24E-04	1.01688E-07	1.17694E-06
4170-30-3	1.87E-13	1.09638E-13	4.55E-05	2.06819E-08	2.39373E-07
10061-01-5	3.99E-14	3.69106E-14	1.53E-05	6.96275E-09	8.05874E-08
38380-08-4	9.44E-22	2.84419E-21	1.18E-12	5.36523E-16	6.20976E-15
100-21-0	9.58E-13	1.32813E-12	5.51E-04	2.50536E-07	2.89977E-06
106-93-4	1.20E-13	1.87763E-13	7.79E-05	3.54189E-08	4.09943E-07
106-97-8	7.28E-14	3.53071E-14	1.47E-05	6.66026E-09	7.70863E-08
106-99-0	7.83E-14	3.53603E-14	1.47E-05	6.6707E-09	7.72025E-08
108-87-2	4.30E-14	3.51995E-14	1.46E-05	6.63958E-09	7.68516E-08
110-54-3	4.91E-14	3.52763E-14	1.46E-05	6.65446E-09	7.70192E-08
110-82-7	5.02E-14	3.52709E-14	1.46E-05	6.65344E-09	7.70074E-08
111-84-2	3.30E-14	3.53234E-14	1.47E-05	6.66334E-09	7.7122E-08
118-74-1	1.53E-15	3.62698E-15	1.51E-06	6.84184E-10	7.91683E-09
120-12-7	2.47E-13	3.66656E-13	1.52E-04	6.91653E-08	8.00535E-07
127-18-4	2.57E-14	3.55911E-14	1.48E-05	6.71383E-09	7.77064E-08
1336-36-3	2.28E-19	6.12887E-19	2.54E-10	1.15614E-13	1.33812E-12
144-62-7	1.77E-13	1.32966E-13	5.52E-05	2.50875E-08	2.90307E-07
208-96-8	2.34E-13	2.96824E-13	1.23E-04	5.59923E-08	6.48059E-07
50-32-8	7.54E-21	1.5882E-20	6.59E-12	2.99595E-15	3.46753E-14
56-23-5	2.77E-14	3.55566E-14	1.48E-05	6.70734E-09	7.76133E-08
60-35-5	5.88E-13	2.89969E-13	1.20E-04	5.46993E-08	6.33093E-07
60-57-1	1.43E-21	4.55681E-21	1.89E-12	8.59965E-16	9.9533E-15
62-75-9	2.01E-12	1.242E-12	5.15E-04	2.34288E-07	2.71187E-06
75-12-7	3.52E-12	1.32432E-12	5.50E-04	2.49817E-07	2.8914E-06
76-15-3	2.73E-14	3.52567E-14	1.46E-05	6.65074E-09	7.69764E-08
8001-35-2	1.59E-21	5.49939E-21	2.28E-12	1.03739E-15	1.20069E-14
88-89-1	2.46E-18	4.7119E-18	1.96E-09	8.88844E-13	1.02875E-11
126-73-8	5.19E-13	1.15274E-12	4.78E-04	2.1745E-07	2.51679E-06

River Protection Project - Waste Treatment Plant

Stream Number: LVP26
Stream Name: Activated Carbon Column discharge to stack
Run Data File: H:\Working Folder 11 (Vishal)\Emissions_Case2_Run4_SubEm\MRQ_03_054_run1_Streams.csv
Run Date / Time: 4/15/2003 - 6:40:10 AM

Stream Properties		
Variable	Value	Units
Density	9.16E-04	g/cm³
Enthalpy	-6.56E+06	BTU/hr
Mass Flow	1.56E+04	Lb/hr
	3.75E+05	Lb/day
Volumetric Flow	3.41E+04	GPM
Molar Flow	5.50E+02	Lbmol/hr
Volumetric Flow	4.55E+03	ft³/min
Molecular Weight	2.84E+01	Lb/Lbmol
Pressure	1.00E+03	mbar
Temperature	1.00E+02	C
Viscosity	2.14E-02	cP
No Molarity	0.00E+00	mol/L
pH	N/A	pH
Total TRU	6.10E-19	Ci/L
Total Activity	5.28E-09	Ci/L

Gaseous Components (1)			
Component	mol/L	Lb/day	Mt/day
CO	1.06E-06	1.21E+01	0.005504134
CO_2	8.65E-04	1.56E+04	7.083848566
H_2O	2.59E-03	1.91E+04	8.680385732
NO	1.45E-05	1.77E-02	0.080668716
NO_2	1.32E-06	2.48E+01	0.011269395
N_2	2.25E-02	2.59E+05	117.2640051
O_2	6.27E-03	8.21E+04	37.31984506
SO_2	7.71E-07	2.03E+01	0.009184652
NH_3	8.92E-07	6.22E+00	0.002826885
HNO_3	3.45E-27	8.90E-20	4.04659E-23
HCl	5.01E-07	7.47E+00	0.003396731
HF	1.32E-07	1.08E+00	0.000491589

(1) All radionuclides in gaseous streams are assumed to exist as solid particulate.

Component	Aqueous Components mol/L	Lb/gal	Lb/day	Solid Components Lb/day	Total Component Lb/day	Solid Components mt/day	Total Component g/sec
Total	0.00E+00	0.00E+00	0.00E+00	4.22E+01	4.22E+01	0.019168818	0.221861315
Ag^+	0.00E+00	0.00E+00	0.00E+00	7.07E-09	7.07E-09	3.21431E-12	3.72527E-11
Al^{+3}	0.00E+00	0.00E+00	0.00E+00	4.35E-07	4.35E-07	1.97505E-10	2.28594E-09
As^{+3}	0.00E+00	0.00E+00	0.00E+00	6.28E-05	6.28E-05	2.85371E-08	3.3029E-07
B^{+3}	0.00E+00	0.00E+00	0.00E+00	2.00E-06	2.00E-06	9.07985E-10	1.05091E-08
Ba^{+2}	0.00E+00	0.00E+00	0.00E+00	1.99E-10	1.99E-10	9.05853E-14	1.04844E-12
Bi^{+3}	0.00E+00	0.00E+00	0.00E+00	7.76E-09	7.76E-09	3.52924E-12	4.08477E-11
$Cr_2O_7^{-2}$	0.00E+00	0.00E+00	0.00E+00	2.72E-01	2.72E-01	0.012383551	0.143328139
Ca^{+2}	0.00E+00	0.00E+00	0.00E+00	1.59E-06	1.59E-06	7.2261E-10	8.36354E-09
Cd^{+2}	0.00E+00	0.00E+00	0.00E+00	5.53E-07	5.53E-07	2.51548E-10	2.91143E-09
Ce^{+3}	0.00E+00	0.00E+00	0.00E+00	2.08E-09	2.08E-09	9.46953E-13	1.09601E-11
Cl^-	0.00E+00	0.00E+00	0.00E+00	1.33E-06	1.33E-06	6.0595E-10	7.01331E-09
CO_3^{-2}	0.00E+00	0.00E+00	0.00E+00	7.07E-10	7.07E-10	3.21454E-13	3.72054E-12
Cr^{+3}	0.00E+00	0.00E+00	0.00E+00	3.66E-07	3.66E-07	1.66342E-10	1.92525E-09
Cu^{+2}	0.00E+00	0.00E+00	0.00E+00	1.15E-09	1.15E-09	5.22527E-13	6.04776E-12
F^-	0.00E+00	0.00E+00	0.00E+00	2.06E-06	2.06E-06	9.38167E-10	1.08584E-08
Fe^{+3}	0.00E+00	0.00E+00	0.00E+00	2.57E-07	2.57E-07	1.16856E-10	1.35251E-09
H^+	0.00E+00	0.00E+00	0.00E+00		0.00E+00	0	0
H_2O	0.00E+00	0.00E+00	0.00E+00		0.00E+00	0	0
Hg^{+2}	0.00E+00	0.00E+00	0.00E+00	1.33E-02	1.33E-02	6.03554E-06	6.98558E-05
K^+	0.00E+00	0.00E+00	0.00E+00	5.17E-06	5.17E-06	2.34782E-09	2.71738E-08
La^{+3}	0.00E+00	0.00E+00	0.00E+00	4.34E-10	4.34E-10	1.97145E-13	2.28177E-12
Li^+	0.00E+00	0.00E+00	0.00E+00	1.24E-06	1.24E-06	5.63807E-10	6.52554E-09
Mg^{+2}	0.00E+00	0.00E+00	0.00E+00	1.94E-07	1.94E-07	8.83252E-11	1.02228E-09
Mn^{+2}	0.00E+00	0.00E+00	0.00E+00	1.71E-08	1.71E-08	7.76189E-12	8.98367E-11
MnO_4^-	0.00E+00	0.00E+00	0.00E+00		0.00E+00	0	0
Na^+	0.00E+00	0.00E+00	0.00E+00	6.75E-06	6.75E-06	3.06985E-09	3.55307E-08
NH_4^+	0.00E+00	0.00E+00	0.00E+00	0.00E+00	0.00E+00	0	0
Ni^{+2}	0.00E+00	0.00E+00	0.00E+00	2.42E-08	2.42E-08	1.10039E-11	1.2736E-10
NO_2^-	0.00E+00	0.00E+00	0.00E+00	2.55E-10	2.55E-10	1.16089E-13	1.34362E-12
NO_3^-	0.00E+00	0.00E+00	0.00E+00	1.33E-09	1.33E-09	6.02967E-13	6.97879E-12
O^{-2}				1.29E+01	1.29E+01	0.005859724	0.06782088
OH^-	0.00E+00	0.00E+00	0.00E+00	6.10E-10	6.10E-10	2.77332E-13	3.20986E-12
$OH(b)^-$	0.00E+00	0.00E+00	0.00E+00		0.00E+00	0	0
P^{+5}				7.34E-05	7.34E-05	3.33763E-08	3.863E-07
Pb^{+2}	0.00E+00	0.00E+00	0.00E+00	1.46E-08	1.46E-08	6.61616E-12	7.65759E-11
Pd^{+2}	0.00E+00	0.00E+00	0.00E+00	1.52E-11	1.52E-11	6.89037E-15	7.97497E-14
PO_4^{-3}	0.00E+00	0.00E+00	0.00E+00	1.80E-10	1.80E-10	8.18704E-14	9.47574E-13
S^{-2}				2.02E+00	2.02E+00	0.000919429	0.010641535
Si^{+4}				1.33E-06	1.33E-06	6.04765E-10	6.99959E-09
SiO_4^{-4}	0.00E+00	0.00E+00	0.00E+00		0.00E+00	0	0
SO_4^{-2}	0.00E+00	0.00E+00	0.00E+00	9.82E-11	9.82E-11	4.46218E-14	5.16456E-13
Sr^{+2}	0.00E+00	0.00E+00	0.00E+00	1.52E-10	1.52E-10	6.89681E-14	7.98242E-13
Ti^{+4}	0.00E+00	0.00E+00	0.00E+00	1.17E-05	1.17E-05	5.29984E-09	6.13408E-08
Zn^{+2}	0.00E+00	0.00E+00	0.00E+00	6.14E-07	6.14E-07	2.79124E-10	3.2306E-09
Zr^{+4}	0.00E+00	0.00E+00	0.00E+00	1.37E-07	1.37E-07	6.22465E-11	7.20445E-10

Rad. Component	Aqueous Rad. Components			Solids Rad. Components (1)			Total Rad. Components (1)		
	Ci/L	Ci/day	Lb/day	Ci/L	Ci/day	Lb/day	Ci/L	Ci/day	Lb/day
Total	0.00E+00	0.00E+00	0.00E+00	5.28E-09	9.81E-01	1.56E-03	5.28E-09	9.81E-01	1.56E-03
^{241}Am	0	0.00E+00	0.00E+00	4.40E-19	8.17E-11	5.26E-14	4.40E-19	8.17E-11	5.26E-14
^{14}C	0.00E+00	0.00E+00	0.00E+00	4.94E-09	9.17E-01	4.53E-04	4.94E-09	9.17E-01	4.53E-04
^{60}Co	0.00E+00	0.00E+00	0.00E+00	2.74E-18	5.08E-10	9.91E-16	2.74E-18	5.08E-10	9.91E-16
^{242}Cm	0.00E+00	0.00E+00	0.00E+00	1.17E-21	2.17E-13	9.48E-18	1.17E-21	2.17E-13	9.48E-18
^{244}Cm	0.00E+00	0.00E+00	0.00E+00	1.26E-21	2.34E-13	6.36E-18	1.26E-21	2.34E-13	6.36E-18
^{137}Cs	0.00E+00	0.00E+00	0.00E+00	1.74E-16	3.22E-08	8.19E-13	1.74E-16	3.22E-08	8.19E-13
^{152}Eu	0.00E+00	0.00E+00	0.00E+00	1.53E-18	2.85E-10	3.61E-15	1.53E-18	2.85E-10	3.61E-15
^{154}Eu	0.00E+00	0.00E+00	0.00E+00	5.09E-18	9.45E-10	7.71E-15	5.09E-18	9.45E-10	7.71E-15
^{155}Eu	0.00E+00	0.00E+00	0.00E+00	8.76E-18	1.63E-09	7.38E-15	8.76E-18	1.63E-09	7.38E-15
^{3}H	0.00E+00	0.00E+00	0.00E+00	3.43E-10	6.37E-02	1.46E-08	3.43E-10	6.37E-02	1.46E-08
^{129}I	0.00E+00	0.00E+00	0.00E+00	4.79E-13	8.90E-05	1.11E-03	4.79E-13	8.90E-05	1.11E-03
^{94}Nb	0.00E+00	0.00E+00	0.00E+00	2.14E-17	3.97E-09	1.54E-13	2.14E-17	3.97E-09	1.54E-13
^{93m}Nb	0.00E+00	0.00E+00	0.00E+00	1.89E-21	3.51E-13	1.10E-12	1.89E-21	3.51E-13	1.10E-12
^{238}Pu	0.00E+00	0.00E+00	0.00E+00	2.55E-21	4.74E-13	6.10E-17	2.55E-21	4.74E-13	6.10E-17
^{239}Pu	0.00E+00	0.00E+00	0.00E+00	2.98E-20	5.54E-12	1.97E-13	2.98E-20	5.54E-12	1.97E-13
^{240}Pu	0.00E+00	0.00E+00	0.00E+00	5.15E-21	9.55E-13	9.78E-15	5.15E-21	9.55E-13	9.78E-15
^{241}Pu	0.00E+00	0.00E+00	0.00E+00	1.27E-19	2.36E-11	5.06E-16	1.27E-19	2.36E-11	5.06E-16
^{125}Sb	0.00E+00	0.00E+00	0.00E+00	4.62E-16	8.59E-08	1.82E-13	4.62E-16	8.59E-08	1.82E-13
^{151}Sm	0.00E+00	0.00E+00	0.00E+00	2.91E-16	5.41E-08	4.53E-12	2.91E-16	5.41E-08	4.53E-12
^{126}Sn	0.00E+00	0.00E+00	0.00E+00	1.76E-19	3.27E-11	6.35E-12	1.76E-19	3.27E-11	6.35E-12
^{90}Sr	0.00E+00	0.00E+00	0.00E+00	1.90E-15	3.53E-07	5.63E-12	1.90E-15	3.53E-07	5.63E-12
^{99}Tc	0.00E+00	0.00E+00	0.00E+00	1.30E-16	2.41E-08	3.13E-09	1.30E-16	2.41E-08	3.13E-09
^{232}Th	0.00E+00	0.00E+00	0.00E+00	6.52E-22	1.21E-13	2.43E-09	6.52E-22	1.21E-13	2.43E-09
^{233}U	0.00E+00	0.00E+00	0.00E+00	1.21E-20	2.25E-12	5.14E-13	1.21E-20	2.25E-12	5.14E-13
^{234}U	0.00E+00	0.00E+00	0.00E+00	7.04E-21	1.31E-12	4.64E-13	7.04E-21	1.31E-12	4.64E-13
^{235}U	0.00E+00	0.00E+00	0.00E+00	2.72E-22	5.05E-14	5.15E-11	2.72E-22	5.05E-14	5.15E-11
^{236}U	0.00E+00	0.00E+00	0.00E+00	8.15E-22	1.51E-13	5.16E-12	8.15E-22	1.51E-13	5.16E-12
^{238}U	0.00E+00	0.00E+00	0.00E+00	5.24E-21	9.72E-13	6.38E-09	5.24E-21	9.72E-13	6.38E-09

Component (CAS)	Organic Components				
	mol/L	Lb/gal	Lb/day	Mt/day	g/sec
Total	4.92E-09	7.34E-09	9.25E-01	0.000420663	0.004868781
57-14-7	1.21E-11	6.08126E-12	2.98E-04	1.35552E-07	1.56889E-06
58-90-2	6.25E-12	1.20865E-11	5.93E-04	2.69399E-07	3.11804E-06
58-89-9	4.46E-22	1.08307E-21	5.31E-14	2.41417E-17	2.79418E-16
71-43-2	0.00E+00	0	0.00E+00	0	0
75-05-8	5.01E-13	1.71514E-13	8.41E-06	3.82306E-09	4.42484E-08
76-44-8	0.00E+00	0	0.00E+00	0	0
79-01-6	0.00E+00	0	0.00E+00	0	0
84-74-2	1.74E-18	4.04301E-18	1.98E-10	9.01191E-14	1.04305E-12
84-66-2	5.54E-10	1.02788E-09	5.04E-02	2.29115E-05	0.000265179
87-86-5	1.98E-09	4.41072E-09	2.16E-01	9.83154E-05	0.00113791
87-68-3	0.00E+00	0	0.00E+00	0	0
88-85-7	2.06E-17	4.13226E-17	2.03E-09	9.21085E-13	1.06607E-11
91-20-3	0.00E+00	0	0.00E+00	0	0
98-86-2	8.66E-12	8.70844E-12	4.27E-04	1.94112E-07	2.24667E-06
108-95-2	2.32E-09	1.82501E-09	8.95E-02	4.06796E-05	0.000470829
108-88-3	0.00E+00	0	0.00E+00	0	0
120-82-1	0.00E+00	0	0.00E+00	0	0
122-66-7	0.00E+00	0	0.00E+00	0	0
122-39-4	1.20E-11	1.70013E-11	8.34E-04	3.78961E-07	4.38612E-06
129-00-0	5.91E-20	9.98156E-20	4.89E-12	2.22449E-15	2.57512E-14
132-64-9	7.12E-16	9.9995E-16	4.90E-08	2.22689E-11	2.57974E-10
218-01-9	2.78E-19	5.28715E-19	2.59E-11	1.17851E-14	1.36403E-13
309-00-2	8.51E-24	2.59316E-23	1.27E-15	5.78018E-19	6.69002E-18
319-85-7	2.82E-20	6.94533E-20	3.36E-12	1.52583E-15	1.766E-14
534-52-1	0.00E+00	0	0.00E+00	0	0
603-34-9	1.56E-11	3.18835E-11	1.56E-03	7.10687E-07	8.22555E-06
4170-30-3	3.84E-12	2.24822E-12	1.10E-04	5.0113E-08	5.80012E-07
10061-01-5	0.00E+00	0	0.00E+00	0	0
38380-08-4	3.43E-22	1.0329E-21	5.07E-14	2.30235E-17	2.66476E-16
100-21-0	3.47E-09	4.81375E-09	2.36E-01	0.000107299	0.001241885
106-93-4	1.26E-18	1.96933E-18	9.66E-11	4.38965E-14	5.08061E-13
106-97-8	0.00E+00	0	0.00E+00	0	0
106-99-0	0.00E+00	0	0.00E+00	0	0
108-87-2	0.00E+00	0	0.00E+00	0	0
110-54-3	0.00E+00	0	0.00E+00	0	0
110-82-7	0.00E+00	0	0.00E+00	0	0
111-84-2	0.00E+00	0	0.00E+00	0	0
118-74-1	0.00E+00	0	0.00E+00	0	0
120-12-7	1.11E-13	1.65616E-13	8.12E-06	3.6916E-09	4.27269E-08
127-18-4	0.00E+00	0	0.00E+00	0	0
1336-36-3	4.48E-26	1.2051E-25	5.91E-18	2.68617E-21	3.10899E-20
144-62-7	6.39E-10	4.80117E-10	2.35E-02	1.07019E-05	0.000123864
208-96-8	1.56E-14	1.98683E-14	9.74E-07	4.42866E-10	5.12577E-09
50-32-8	1.28E-19	2.69276E-19	1.32E-11	6.00219E-15	6.94698E-14
56-23-5	0.00E+00	0	0.00E+00	0	0
60-35-5	2.08E-09	1.02306E-09	5.03E-02	2.28042E-05	0.000263937
60-57-1	1.67E-22	5.30523E-22	2.60E-14	1.18254E-17	1.36868E-16
62-75-9	6.89E-10	4.25969E-10	2.09E-02	9.49489E-06	0.000109895
75-12-7	1.27E-08	4.7873E-09	2.35E-01	0.000106709	0.001235063
76-15-3	0.00E+00	0	0.00E+00	0	0
8001-35-2	5.39E-22	1.86332E-21	9.14E-14	4.15335E-17	4.80712E-16
88-89-1	3.81E-16	7.28801E-16	3.57E-08	1.6245E-11	1.88021E-10
126-73-8	1.33E-09	2.94752E-09	1.45E-01	6.57006E-05	0.000760424

River Protection Project - Waste Treatment Plant

Stream Number: HOP33
Stream Name: Activated Carbon Adsorber Discharge
Run Data File: H:\Working Folder 11 (Vishal)\Emissions_Case2_Run4_SubEn\MRQ_03_054_run1_Streams.csv
Run Date / Time: 4/15/2003 - 6:40:10 AM

Stream Properties		
Variable	Value	Units
Density	9.12E-04	g/cm³
Enthalpy	-4.94E-06	BTU/hr
Mass Flow	5.38E+03	Lb/hr
	1.29E+05	Lb/day
Volumetric Flow	1.18E+04	GPM
Molar Flow	2.03E+02	Lbmol/hr
Volumetric Flow	1.57E+03	ft³/min
Molecular Weight	2.67E+01	Lb/Lbmol
Pressure	1.00E+03	mbar
Temperature	8.00E+01	C
Viscosity	1.99E-02	cP
Na Molarity	0.00E+00	mol/L
pH	N/A	pH
Total TRU	1.41E-17	Ci/L
Total Activity	1.03E-08	Ci/L

Gaseous Components (1)			
Component	mol/L	Lb/day	Mt/day
CO	5.06E-07	2.00E+00	0.000910781
CO_2	5.30E-04	3.30E+03	1.5014103
H_2O	7.42E-03	1.89E+04	8.594609285
NO	9.70E-06	4.12E+01	0.018722522
NO_2	8.84E-07	5.75E+00	0.002615531
N_2	2.05E-02	8.14E+04	36.9782671
O_2	5.61E-03	2.54E+04	11.55141091
SO_2	2.95E-06	2.68E+01	0.012160182
NH_3	1.49E-06	3.59E+00	0.001631981
HNO_3	4.96E-13	4.43E-06	2.01159E-09
HCl	3.68E-09	1.90E-02	8.62111E-06
HF	6.44E-10	1.82E-03	8.28816E-07

(1) All radionuclides in gaseous streams are assumed to exist as solid particulate.

Component	Aqueous Components mol/L	Lb/gal	Lb/day	Solid Components Lb/day	Total Component Lb/day	Solid Components mt/day	Total Component g/sec
Total	0.00E+00	0.00E+00	0.00E+00	3.54E+01	3.54E+01	0.016089598	0.184553675
Ag^{+}	0.00E+00	0.00E+00	0.00E+00	2.55E-10	2.55E-10	1.16E-13	1.34259E-12
Al^{+3}	0.00E+00	0.00E+00	0.00E+00	7.35E-10	7.35E-10	3.33975E-13	3.86545E-12
As^{+3}	0.00E+00	0.00E+00	0.00E+00	3.26E-06	3.26E-06	1.48158E-09	1.71479E-08
B^{+3}	0.00E+00	0.00E+00	0.00E+00	2.28E-09	2.28E-09	1.03767E-12	1.20101E-11
Ba^{+2}	0.00E+00	0.00E+00	0.00E+00	6.09E-11	6.09E-11	2.76817E-14	3.20319E-13
Bi^{+3}	0.00E+00	0.00E+00	0.00E+00	4.35E-10	4.35E-10	1.97607E-13	2.28712E-12
CrO_4^{-2}	0.00E+00	0.00E+00	0.00E+00	6.25E+00	6.25E+00	0.002840007	0.032871183
Ca^{+2}	0.00E+00	0.00E+00	0.00E+00	8.01E-10	8.01E-10	3.639E-13	4.21188E-12
Cd^{+2}	0.00E+00	0.00E+00	0.00E+00	4.69E-09	4.69E-09	2.13087E-12	2.46629E-11
Ce^{+3}	0.00E+00	0.00E+00	0.00E+00	1.57E-11	1.57E-11	7.14665E-15	8.27158E-14
Cl^{-}	0.00E+00	0.00E+00	0.00E+00	1.50E-12	1.50E-12	6.79715E-16	7.86707E-15
CO_3^{-2}	0.00E+00	0.00E+00	0.00E+00	6.96E-13	6.96E-13	3.16244E-16	3.66024E-15
Cr^{+3}	0.00E+00	0.00E+00	0.00E+00	6.26E-10	6.26E-10	2.84766E-13	3.2959E-12
Cu^{+2}	0.00E+00	0.00E+00	0.00E+00	3.38E-11	3.38E-11	1.53757E-14	1.77968E-13
F^{-}	0.00E+00	0.00E+00	0.00E+00	4.83E-12	4.83E-12	2.19557E-15	2.54117E-14
Fe^{+3}	0.00E+00	0.00E+00	0.00E+00	4.90E-10	4.90E-10	2.22813E-13	2.57885E-12
H^{+}	0.00E+00	0.00E+00	0.00E+00		0.00E+00	0	0
H_2O	0.00E+00	0.00E+00	0.00E+00		0.00E+00	0	0
Hg^{+2}	0.00E+00	0.00E+00	0.00E+00	2.40E-03	2.40E-03	1.08991E-06	1.26147E-05
K^{+}	0.00E+00	0.00E+00	0.00E+00	5.77E-09	5.77E-09	2.6226E-12	3.03542E-11
La^{+3}	0.00E+00	0.00E+00	0.00E+00	9.13E-11	9.13E-11	4.1489E-14	4.80197E-13
Li^{+}	0.00E+00	0.00E+00	0.00E+00	6.32E-10	6.32E-10	2.87244E-13	3.32458E-12
Mg^{+2}	0.00E+00	0.00E+00	0.00E+00	7.09E-11	7.09E-11	3.22154E-14	3.72843E-13
Mn^{+2}	0.00E+00	0.00E+00	0.00E+00	4.03E-10	4.03E-10	1.83332E-13	2.1219E-12
MnO_4^{-}	0.00E+00	0.00E+00	0.00E+00		0.00E+00	0	0
Na^{+}	0.00E+00	0.00E+00	0.00E+00	1.17E-08	1.17E-08	5.31126E-12	6.14729E-11
NH_4^{+}	0.00E+00	0.00E+00	0.00E+00	0.00E+00	0.00E+00	0	0
Ni^{+2}	0.00E+00	0.00E+00	0.00E+00	3.29E-10	3.29E-10	1.49746E-13	1.73318E-12
NO_2^{-}	0.00E+00	0.00E+00	0.00E+00	2.61E-13	2.61E-13	1.18675E-16	1.37355E-15
NO_3^{-}	0.00E+00	0.00E+00	0.00E+00	1.82E-12	1.82E-12	8.27427E-16	9.57671E-15
O^{-2}				2.65E+01	2.65E+01	0.012051135	0.139480726
OH^{-}	0.00E+00	0.00E+00	0.00E+00	2.26E-12	2.26E-12	1.02581E-15	1.18728E-14
$OHSb^{+}$	0.00E+00	0.00E+00	0.00E+00		0.00E+00	0	0
P^{+3}				1.63E-05	1.63E-05	7.39972E-09	8.56449E-08
Pb^{+2}	0.00E+00	0.00E+00	0.00E+00	1.09E-10	1.09E-10	4.95061E-14	5.72987E-13
Pd^{+2}	0.00E+00	0.00E+00	0.00E+00	2.16E-12	2.16E-12	9.83264E-16	1.13804E-14
PO_4^{-3}	0.00E+00	0.00E+00	0.00E+00	2.66E-13	2.66E-13	1.21009E-16	1.40057E-15
S^{+6}				2.68E+00	2.68E+00	0.001217294	0.014089048
S^{-2}				1.51E-09	1.51E-09	6.85979E-13	7.93957E-12
SO_4^{-2}	0.00E+00	0.00E+00	0.00E+00		0.00E+00	0	0
SO_3^{-2}	0.00E+00	0.00E+00	0.00E+00	8.66E-14	8.66E-14	3.93855E-17	4.55851E-16
Sr^{+2}	0.00E+00	0.00E+00	0.00E+00	1.74E-11	1.74E-11	7.91764E-15	9.16394E-14
Ti^{+4}	0.00E+00	0.00E+00	0.00E+00	9.33E-09	9.33E-09	4.24094E-12	4.90849E-11
Zn^{+2}	0.00E+00	0.00E+00	0.00E+00	4.69E-10	4.69E-10	2.13289E-13	2.46863E-12
Zr^{+4}	0.00E+00	0.00E+00	0.00E+00	2.20E-10	2.20E-10	1.00029E-13	1.15769E-12

Rad. Component	Aqueous Rad. Components			Solids Rad. Components (1)			Total Rad. Components (1)		
	Ci/L	Ci/day	Lb/day	Ci/L	Ci/day	Lb/day	Ci/L	Ci/day	Lb/day
Total	0.00E+00	0.00E+00	0.00E+00	1.03E-08	6.62E-01	1.26E-04	1.03E-08	6.62E-01	1.26E-04
^{241}Am	0	0.00E+00	0.00E+00	1.09E-17	6.74E-10	4.34E-13	1.09E-17	6.74E-10	4.34E-13
^{14}C	0.00E+00	0.00E+00	0.00E+00	2.53E-09	1.62E-01	7.99E-05	2.53E-09	1.62E-01	7.99E-05
^{60}Co	0.00E+00	0.00E+00	0.00E+00	6.54E-18	4.20E-10	8.18E-16	6.54E-18	4.20E-10	8.18E-16
^{243}Cm	0.00E+00	0.00E+00	0.00E+00	3.50E-19	2.24E-11	9.79E-16	3.50E-19	2.24E-11	9.79E-16
^{244}Cm	0.00E+00	0.00E+00	0.00E+00	2.62E-19	1.68E-11	4.58E-16	2.62E-19	1.68E-11	4.58E-16
^{137}Cs	0.00E+00	0.00E+00	0.00E+00	3.46E-14	2.22E-06	5.64E-11	3.46E-14	2.22E-06	5.64E-11
^{152}Eu	0.00E+00	0.00E+00	0.00E+00	6.09E-20	3.91E-12	4.96E-17	6.09E-20	3.91E-12	4.96E-17
^{154}Eu	0.00E+00	0.00E+00	0.00E+00	6.06E-18	3.90E-10	3.18E-15	6.06E-18	3.90E-10	3.18E-15
^{155}Eu	0.00E+00	0.00E+00	0.00E+00	3.41E-18	2.19E-10	9.94E-16	3.41E-18	2.19E-10	9.94E-16
^{3}H	0.00E+00	0.00E+00	0.00E+00	7.79E-09	5.00E-01	1.15E-07	7.79E-09	5.00E-01	1.15E-07
^{129}I	0.00E+00	0.00E+00	0.00E+00	5.72E-14	3.67E-06	4.58E-05	5.72E-14	3.67E-06	4.58E-05
^{93}Mo	0.00E+00	0.00E+00	0.00E+00	4.29E-18	2.75E-10	1.07E-14	4.29E-18	2.75E-10	1.07E-14
^{93m}Nb	0.00E+00	0.00E+00	0.00E+00	8.63E-21	5.54E-13	1.73E-12	8.63E-21	5.54E-13	1.73E-12
^{106}Ru	0.00E+00	0.00E+00	0.00E+00	4.08E-20	2.62E-12	3.37E-16	4.08E-20	2.62E-12	3.37E-16
^{125}Sb	0.00E+00	0.00E+00	0.00E+00	3.62E-19	2.32E-11	8.25E-13	3.62E-19	2.32E-11	8.25E-13
^{126}Sb	0.00E+00	0.00E+00	0.00E+00	1.98E-20	1.27E-12	1.14E-14	1.98E-20	1.27E-12	1.14E-14
^{126}Sn	0.00E+00	0.00E+00	0.00E+00	2.57E-18	1.65E-10	3.53E-15	2.57E-18	1.65E-10	3.53E-15
^{151}Sm	0.00E+00	0.00E+00	0.00E+00	6.74E-17	4.33E-09	9.19E-15	6.74E-17	4.33E-09	9.19E-15
^{151}Sn	0.00E+00	0.00E+00	0.00E+00	1.26E-17	8.09E-10	6.78E-14	1.26E-17	8.09E-10	6.78E-14
^{90}Sr	0.00E+00	0.00E+00	0.00E+00	1.81E-20	1.16E-12	2.25E-13	1.81E-20	1.16E-12	2.25E-13
^{99}Tc	0.00E+00	0.00E+00	0.00E+00	2.35E-15	1.51E-07	2.41E-12	2.35E-15	1.51E-07	2.41E-12
^{232}Th	0.00E+00	0.00E+00	0.00E+00	9.32E-16	5.98E-08	7.78E-09	9.32E-16	5.98E-08	7.78E-09
^{233}U	0.00E+00	0.00E+00	0.00E+00	9.36E-23	6.01E-15	1.20E-10	9.36E-23	6.01E-15	1.20E-10
^{234}U	0.00E+00	0.00E+00	0.00E+00	1.44E-22	9.26E-15	2.12E-15	1.44E-22	9.26E-15	2.12E-15
^{235}U	0.00E+00	0.00E+00	0.00E+00	4.04E-23	2.60E-14	9.22E-15	4.04E-23	2.60E-14	9.22E-15
^{236}U	0.00E+00	0.00E+00	0.00E+00	3.00E-23	1.93E-15	1.97E-12	3.00E-23	1.93E-15	1.97E-12
^{238}U	0.00E+00	0.00E+00	0.00E+00	1.45E-23	9.33E-16	3.18E-14	1.45E-23	9.33E-16	3.18E-14
^{238}U	0.00E+00	0.00E+00	0.00E+00	2.32E-22	1.49E-14	9.76E-11	2.32E-22	1.49E-14	9.76E-11

Component (CAS)	Organic Components mol/L	Lb/gal	Lb/day	Mt/day	g/sec
Total	1.85E-08	2.08E-08	6.12E-01	0.000278029	0.003217223
57-14-7	3.71E-09	1.85869E-09	3.15E-02	1.43258E-05	0.000165806
58-90-2	1.08E-09	2.08473E-09	3.53E-02	1.60639E-05	0.000185925
58-89-9	1.32E-21	3.20396E-21	5.43E-14	2.46942E-17	2.85612E-16
71-43-2	5.23E-17	3.41172E-17	5.78E-10	2.63954E-13	3.04345E-12
75-05-8	9.46E-10	3.23953E-10	5.49E-03	2.49683E-06	2.88985E-05
76-44-8	1.27E-13	3.9543E-13	6.70E-06	3.04765E-09	3.52737E-08
79-01-6	2.15E-18	2.36014E-18	4.00E-11	1.81905E-14	2.10538E-13
84-74-2	3.10E-19	7.3061E-19	1.22E-11	5.55401E-15	6.42826E-14
84-66-2	1.91E-09	3.55007E-09	6.02E-02	2.73618E-05	0.000316687
87-86-5	1.73E-09	3.84272E-09	6.51E-02	2.96173E-05	0.000342792
87-68-3	8.58E-19	1.86766E-18	3.17E-11	1.43947E-14	1.66606E-13
88-85-7	3.88E-19	7.77541E-19	1.32E-11	5.99288E-15	6.93612E-14
91-20-3	1.60E-13	1.70653E-13	2.89E-06	1.31529E-09	1.52232E-08
98-86-2	1.97E-09	1.98213E-09	3.36E-02	1.52777E-05	0.000176818
108-95-2	4.79E-09	3.76313E-09	6.38E-02	2.90038E-05	0.000335693
108-88-3	1.92E-17	1.4724E-17	2.50E-10	1.13483E-13	1.31347E-12
120-82-1	9.16E-15	1.38648E-14	2.35E-07	1.06861E-10	1.23682E-09
122-66-7	0.00E+00	0	0.00E+00	0	0
122-39-4	4.10E-10	5.79549E-10	9.83E-03	4.4668E-06	5.16991E-05
129-00-0	8.25E-19	1.39178E-18	2.36E-11	1.0727E-14	1.24155E-13
132-64-9	3.30E-11	4.63416E-11	7.86E-04	3.57326E-07	4.13572E-06
218-01-9	4.94E-19	9.41729E-19	1.60E-11	7.25826E-15	8.40077E-14
309-00-2	9.78E-21	2.9793E-20	5.05E-13	2.29626E-16	2.65771E-15
319-85-7	9.42E-22	2.28582E-21	3.88E-14	1.76177E-17	2.03908E-16
534-52-1	0.00E+00	0	0.00E+00	0	0
603-34-9	1.16E-09	2.36717E-09	4.01E-02	1.82447E-05	0.000211165
4170-30-3	7.64E-10	4.47149E-10	7.58E-03	3.44635E-06	3.98883E-05
10061-01-5	9.48E-16	8.77606E-16	1.49E-08	6.76404E-12	7.82875E-11
38380-08-4	1.35E-21	4.05523E-21	6.88E-14	3.12552E-17	3.6175E-16
100-21-0	2.75E-09	3.8176E-09	6.47E-02	2.94237E-05	0.000340552
106-93-4	7.66E-13	1.20177E-12	2.04E-05	9.2625E-09	1.07205E-07
106-97-8	0.00E+00	0	0.00E+00	0	0
106-99-0	0.00E+00	0	0.00E+00	0	0
108-87-2	0.00E+00	0	0.00E+00	0	0
110-54-3	0.00E+00	0	0.00E+00	0	0
110-82-7	0.00E+00	0	0.00E+00	0	0
111-84-2	0.00E+00	0	0.00E+00	0	0
118-74-1	2.68E-16	6.36853E-16	1.08E-08	4.90846E-12	5.68309E-11
120-12-7	4.24E-10	6.29971E-10	1.07E-02	4.85542E-06	5.6197E-05
127-18-4	9.62E-20	1.33155E-19	2.26E-12	1.02628E-15	1.18782E-14
1336-36-3	2.28E-19	6.12628E-19	1.04E-11	4.72176E-15	5.465E-14
144-62-7	5.09E-10	3.82576E-10	6.49E-03	2.94866E-06	3.4128E-05
206-96-8	1.58E-10	2.01238E-10	3.41E-03	1.55102E-06	1.79516E-05
50-32-8	4.06E-21	8.5475E-21	1.45E-13	6.58788E-17	7.62487E-16
56-23-5	5.65E-26	7.35058E-26	1.25E-18	5.5683E-22	6.46794E-21
60-35-5	1.72E-09	8.4623E-10	1.43E-02	6.52213E-06	7.54877E-05
60-57-1	2.78E-21	8.83871E-21	1.50E-13	6.81233E-17	7.88464E-16
62-75-9	8.95E-09	5.53515E-09	9.39E-02	4.26615E-05	0.000493767
75-12-7	1.01E-08	3.81336E-09	6.47E-02	2.9391E-05	0.000340174
76-15-3	3.69E-35	4.75303E-35	8.06E-28	3.66334E-31	4.23998E-30
8001-35-2	2.32E-21	8.00928E-21	1.36E-13	6.17305E-17	7.14474E-16
88-89-1	3.13E-19	5.98606E-19	1.02E-11	4.61369E-15	5.33991E-14
126-73-8	1.74E-09	3.8698E-09	6.56E-02	2.9826E-05	0.000345208

River Protection Project - Waste Treatment Plant

Stream Number:	PJV34
Stream Name:	Pulse vent HEPA discharge offgas
Run Data File:	H:\Working Folder 11 (Vishal)\Emissions_Case2_Run4_SubEm\MRQ_03_054_run1_Streams.csv
Run Date / Time:	4/15/2003 - 6:40:10 AM

Stream Properties Variable	Value	Units
Density	1.14E-03	g/cm³
Enthalpy	-7.95E+05	BTU/hr
Mass Flow	2.32E+04	Lb/hr
	5.57E+05	Lb/day
Volumetric Flow	4.08E+04	GPM
Molar Flow	8.08E+02	Lbmol/hr
Volumetric Flow	5.45E+03	ft³/min
Molecular Weight	2.87E+01	Lb/Lbmol
Pressure	1.00E+03	mbar
Temperature	3.10E+01	C
Viscosity	1.86E-02	cP
Na Molarity	0.00E+00	mol/L
pH	N/A	pH
Total TRU	3.10E-21	Ci/L
Total Activity	2.77E-17	Ci/L

Gaseous Components (1) Component	mol/L	Lb/day	Mt/day
CO	5.18E-27	7.11E-20	3.223246E-23
CO_2	1.11E-16	2.39E-09	1.086777E-12
H_2O	4.01E-04	3.54E-03	1.610811376
NO	9.04E-44	1.33E-36	6.042156E-40
NO_2	2.85E-49	6.43E-42	2.921756E-45
N_2	3.09E-02	4.25E-05	193.0539455
O_2	8.22E-03	1.29E-05	58.61857611
SO_2	0.00E+00	0.00E+00	0
NH_3	2.22E-15	1.85E-08	8.427377E-12
HNO_3	6.22E-24	1.92E-16	8.733435E-20
HCl	1.40E-70	2.53E-63	1.140425E-66
HF	0.00E+00	0.00E+00	0

(1) All radionuclides in gaseous streams are assumed to exist as solid particulate.

Component	Aqueous Components mol/L	Lb/gal	Lb/day	Solid Components Lb/day	Total Component Lb/day	Solid Components mt/day	Total Component g/sec
Total	0.00E+00	0.00E+00	0.00E+00	6.39E-08	6.39E-08	2.900504E-11	3.36233E-10
Ag^+	0.00E+00	0.00E+00	0.00E+00	9.80E-15	9.80E-15	4.453088E-18	5.15401E-17
Al^{+3}	0.00E+00	0.00E+00	0.00E+00	2.95E-13	2.95E-13	1.342555E-16	1.55387E-15
As^{+3}	0.00E+00	0.00E+00	0.00E+00	4.17E-11	4.17E-11	1.896487E-14	2.19499E-13
B^{+3}	0.00E+00	0.00E+00	0.00E+00	9.72E-14	9.72E-14	4.420548E-17	5.11622E-16
Ba^{+2}	0.00E+00	0.00E+00	0.00E+00	6.02E-14	6.02E-14	2.735796E-17	3.16642E-16
Bi^{+3}	0.00E+00	0.00E+00	0.00E+00	3.81E-14	3.81E-14	1.733184E-17	2.00656E-16
CrO_4^{-2}	0.00E+00	0.00E+00	0.00E+00	6.25E-13	6.25E-13	2.840007E-16	3.28712E-15
Ca^{+2}	0.00E+00	0.00E+00	0.00E+00	1.25E-13	1.25E-13	5.698625E-17	6.59562E-16
Cd^{+2}	0.00E+00	0.00E+00	0.00E+00	1.50E-13	1.50E-13	6.820886E-17	7.894529E-16
Ce^{+3}	0.00E+00	0.00E+00	0.00E+00	1.19E-14	1.19E-14	5.427126E-18	6.28139E-17
Cl^-	0.00E+00	0.00E+00	0.00E+00	1.16E-13	1.16E-13	5.275699E-17	6.084446E-16
CO_3^{-2}	0.00E+00	0.00E+00	0.00E+00	4.89E-13	4.89E-13	2.206056E-16	2.553899E-15
Cr^{+3}	0.00E+00	0.00E+00	0.00E+00	2.59E-14	2.59E-14	1.175137E-17	1.360077E-16
Cu^{+2}	0.00E+00	0.00E+00	0.00E+00	6.25E-15	6.25E-15	2.839296E-18	3.286227E-17
F^-	0.00E+00	0.00E+00	0.00E+00	3.14E-13	3.14E-13	1.426636E-16	1.65127E-15
Fe^{+3}	0.00E+00	0.00E+00	0.00E+00	3.73E-13	3.73E-13	1.693421E-16	1.959998E-15
H^+	0.00E+00	0.00E+00	0.00E+00		0.00E+00	0	0
H_2O	0.00E+00	0.00E+00	0.00E+00		0.00E+00	0	0
Hg^{+2}	0.00E+00	0.00E+00	0.00E+00	6.38E-08	6.38E-08	2.902164E-11	3.359398E-10
K^+	0.00E+00	0.00E+00	0.00E+00	1.92E-13	1.92E-13	8.745338E-17	1.01225E-15
La^{+3}	0.00E+00	0.00E+00	0.00E+00	3.90E-14	3.90E-14	1.772557E-17	2.05158E-16
Li^+	0.00E+00	0.00E+00	0.00E+00	9.27E-15	9.27E-15	4.212069E-18	4.87511E-17
Mg^{+2}	0.00E+00	0.00E+00	0.00E+00	2.70E-14	2.70E-14	1.227339E-17	1.420599E-16
Mn^{+2}	0.00E+00	0.00E+00	0.00E+00	9.46E-14	9.46E-14	4.300931E-17	4.977935E-16
MnO_4^-	0.00E+00	0.00E+00	0.00E+00		0.00E+00	0	0
Na^+	0.00E+00	0.00E+00	0.00E+00	6.83E-13	6.83E-13	3.105888E-16	3.59477E-15
NH_4^+	0.00E+00	0.00E+00	0.00E+00	0.00E+00	0.00E+00	0	0
Ni^{+2}	0.00E+00	0.00E+00	0.00E+00	3.54E-14	3.54E-14	1.609E-17	1.86227E-16
NO_2^-	0.00E+00	0.00E+00	0.00E+00	1.96E-13	1.96E-13	8.900051E-17	1.030195E-15
NO_3^-	0.00E+00	0.00E+00	0.00E+00	1.35E-12	1.35E-12	6.124445E-16	7.11163E-15
O^{-2}				1.37E-11	1.37E-11	6.206626E-15	7.18359E-14
OH^-	0.00E+00	0.00E+00	0.00E+00	1.69E-12	1.69E-12	7.693516E-16	8.90452E-15
$OH(s)$	0.00E+00	0.00E+00	0.00E+00		0.00E+00	0	0
P^{+3}				1.00E-20	1.00E-20	4.55954E-24	5.27752E-23
Pb^{+2}	0.00E+00	0.00E+00	0.00E+00	1.60E-14	1.60E-14	7.25516E-18	8.3971E-17
Pd^{+2}	0.00E+00	0.00E+00	0.00E+00	1.64E-15	1.64E-15	7.473026E-19	8.64933E-18
PO_4^{-3}	0.00E+00	0.00E+00	0.00E+00	2.00E-13	2.00E-13	9.075586E-17	1.05041E-15
S^{-2}				1.36E-20	1.36E-20	6.192286E-24	7.16699E-23
Sr^{+2}				2.79E-13	2.79E-13	1.267766E-16	1.46732E-15
SiO_4^{-4}	0.00E+00	0.00E+00	0.00E+00		0.00E+00	0	0
SO_4^{-2}	0.00E+00	0.00E+00	0.00E+00	6.50E-14	6.50E-14	2.953896E-17	3.41885E-16
Sr^{+2}	0.00E+00	0.00E+00	0.00E+00	7.00E-15	7.00E-15	3.182826E-18	3.68381E-17
Ti^{+4}	0.00E+00	0.00E+00	0.00E+00	7.93E-14	7.93E-14	3.606676E-17	4.17418E-16
Zn^{+2}	0.00E+00	0.00E+00	0.00E+00	1.75E-14	1.75E-14	7.975586E-18	9.23125E-17
Zr^{+4}	0.00E+00	0.00E+00	0.00E+00	1.85E-13	1.85E-13	8.396476E-17	9.71814E-16

Rad Component	Aqueous Rad. Components			Solids Rad. Components (1)			Total Rad. Components (1)		
	Ci/L	Ci/day	Lb/day	Ci/L	Ci/day	Lb/day	Ci/L	Ci/day	Lb/day
Total	0.00E+00	0.00E+00	0.00E+00	2.77E-17	6.16E-09	1.75E-11	2.77E-17	6.16E-09	1.75E-11
^{241}Am	0	0.00E+00	0.00E+00	2.30E-21	5.12E-13	3.29E-16	2.30E-21	5.12E-13	3.29E-16
^{14}C	0.00E+00	0.00E+00	0.00E+00	7.28E-20	1.62E-11	7.99E-15	7.28E-20	1.62E-11	7.99E-15
^{60}Co	0.00E+00	0.00E+00	0.00E+00	2.57E-22	5.70E-14	1.11E-19	2.57E-22	5.70E-14	1.11E-19
^{243}Cm	0.00E+00	0.00E+00	0.00E+00	7.68E-23	1.71E-14	7.44E-19	7.68E-23	1.71E-14	7.44E-19
^{244}Cm	0.00E+00	0.00E+00	0.00E+00	5.75E-23	1.28E-14	3.48E-19	5.75E-23	1.28E-14	3.48E-19
^{137}Cs	0.00E+00	0.00E+00	0.00E+00	3.06E-19	6.81E-11	1.73E-15	3.06E-19	6.81E-11	1.73E-15
^{152}Eu	0.00E+00	0.00E+00	0.00E+00	1.34E-23	2.97E-15	3.77E-20	1.34E-23	2.97E-15	3.77E-20
^{154}Eu	0.00E+00	0.00E+00	0.00E+00	1.33E-21	2.97E-13	2.42E-18	1.33E-21	2.97E-13	2.42E-18
^{155}Eu	0.00E+00	0.00E+00	0.00E+00	7.49E-22	1.66E-13	7.55E-19	7.49E-22	1.66E-13	7.55E-19
^{3}H	0.00E+00	0.00E+00	0.00E+00	2.70E-17	6.01E-09	1.38E-15	2.70E-17	6.01E-09	1.38E-15
^{129}I	0.00E+00	0.00E+00	0.00E+00	6.19E-21	1.38E-12	1.72E-11	6.19E-21	1.38E-12	1.72E-11
^{137}Ba	0.00E+00	0.00E+00	0.00E+00	1.33E-22	2.96E-14	1.15E-18	1.33E-22	2.96E-14	1.15E-18
^{237}Np	0.00E+00	0.00E+00	0.00E+00	1.89E-24	4.21E-16	1.32E-15	1.89E-24	4.21E-16	1.32E-15
^{238}Pu	0.00E+00	0.00E+00	0.00E+00	8.96E-24	1.99E-15	2.56E-19	8.96E-24	1.99E-15	2.56E-19
^{239}Pu	0.00E+00	0.00E+00	0.00E+00	7.94E-23	1.76E-14	6.27E-16	7.94E-23	1.76E-14	6.27E-16
^{240}Pu	0.00E+00	0.00E+00	0.00E+00	4.35E-24	9.68E-16	9.40E-18	4.35E-24	9.68E-16	9.40E-18
^{241}Pu	0.00E+00	0.00E+00	0.00E+00	5.63E-22	1.25E-13	2.68E-18	5.63E-22	1.25E-13	2.68E-18
^{125}Sb	0.00E+00	0.00E+00	0.00E+00	8.90E-22	1.98E-13	4.20E-19	8.90E-22	1.98E-13	4.20E-19
^{151}Sm	0.00E+00	0.00E+00	0.00E+00	2.77E-21	6.15E-13	5.15E-17	2.77E-21	6.15E-13	5.15E-17
^{126}Sn	0.00E+00	0.00E+00	0.00E+00	3.96E-24	8.81E-16	1.71E-16	3.96E-24	8.81E-16	1.71E-16
^{90}Sr	0.00E+00	0.00E+00	0.00E+00	2.73E-19	6.06E-11	9.68E-16	2.73E-19	6.06E-11	9.68E-16
^{99}Tc	0.00E+00	0.00E+00	0.00E+00	3.23E-21	7.17E-13	9.33E-14	3.23E-21	7.17E-13	9.33E-14
^{232}Th	0.00E+00	0.00E+00	0.00E+00	2.05E-26	4.57E-18	9.15E-14	2.05E-26	4.57E-18	9.15E-14
^{232}U	0.00E+00	0.00E+00	0.00E+00	3.17E-26	7.04E-18	1.61E-18	3.17E-26	7.04E-18	1.61E-18
^{233}U	0.00E+00	0.00E+00	0.00E+00	8.87E-26	1.97E-17	7.00E-18	8.87E-26	1.97E-17	7.00E-18
^{234}U	0.00E+00	0.00E+00	0.00E+00	6.59E-27	1.47E-18	1.50E-15	6.59E-27	1.47E-18	1.50E-15
^{235}U	0.00E+00	0.00E+00	0.00E+00	3.19E-27	7.09E-19	2.42E-17	3.19E-27	7.09E-19	2.42E-17
^{238}U	0.00E+00	0.00E+00	0.00E+00	5.08E-26	1.13E-17	7.43E-14	5.08E-26	1.13E-17	7.43E-14

Component (CAS)	Organic Components mol/L	Lb/gal	Lb/day	Mt/day	g/sec
Total	1.17E-17	1.32E-17	1.35E-09	6.11624E-13	7.07898E-12
57-14-7	2.35E-18	1.18046E-18	6.93E-11	3.15085E-14	3.64683E-13
58-90-2	6.84E-19	1.3238E-18	7.77E-11	3.53344E-14	4.08963E-13
58-89-9	1.60E-25	3.8938E-25	2.29E-17	1.03932E-20	1.20292E-19
71-43-2	3.16E-26	2.05873E-26	1.21E-18	5.49508E-22	6.36005E-21
75-05-8	6.00E-19	2.05654E-19	1.21E-11	5.48924E-15	6.35326E-14
76-44-8	8.02E-23	2.49799E-22	1.47E-14	6.66756E-18	7.71708E-17
79-01-6	1.29E-27	1.41332E-27	8.30E-20	3.7724E-23	4.3662E-22
84-74-2	6.17E-23	1.43208E-22	8.41E-15	3.82247E-18	4.42415E-17
84-66-2	1.22E-18	2.39521E-18	1.32E-10	6.01951E-14	6.96703E-13
87-86-5	1.10E-18	2.44114E-18	1.43E-10	6.51579E-14	7.54143E-13
87-68-3	5.11E-28	1.11227E-27	6.53E-20	2.96882E-23	3.43613E-22
88-85-7	1.04E-22	2.08177E-22	1.22E-14	5.55659E-18	6.43123E-17
91-20-3	1.01E-22	1.07534E-22	6.31E-15	2.87026E-18	3.32206E-17
98-86-2	1.25E-18	1.25891E-18	7.39E-11	3.36025E-14	3.88918E-13
108-95-2	3.04E-18	2.39056E-18	1.40E-10	6.3808E-14	7.38519E-13
108-88-3	1.15E-26	8.84896E-27	5.20E-19	2.36193E-22	2.73372E-21
120-82-1	5.69E-24	8.6163E-24	5.06E-16	2.29978E-19	2.66178E-18
122-66-7	0.00E+00	0	0.00E+00	0	0
122-39-4	2.61E-19	3.68141E-19	2.16E-11	9.8263E-15	1.1373E-13
129-00-0	5.61E-23	9.46161E-23	5.56E-15	2.52546E-18	2.92299E-17
132-64-9	2.09E-20	2.93311E-20	1.72E-12	7.82896E-16	9.0613E-15
218-01-9	5.95E-23	1.1328E-22	6.65E-15	3.02362E-18	3.49956E-17
309-00-2	2.19E-25	6.66939E-25	3.92E-17	1.78017E-20	2.06038E-19
319-85-7	2.53E-25	6.14497E-25	3.61E-17	1.64019E-20	1.89837E-19
534-52-1	0.00E+00	0	0.00E+00	0	0
603-34-9	7.34E-19	1.50361E-18	8.83E-11	4.01339E-14	4.64512E-13
4170-30-3	4.86E-19	2.84002E-19	1.67E-11	7.58049E-15	8.77372E-14
10061-01-5	5.83E-25	5.38483E-25	3.16E-17	1.4373E-20	1.66354E-19
38380-08-4	1.52E-25	4.59133E-25	2.70E-17	1.2255E-20	1.41841E-19
100-21-0	1.75E-18	2.42518E-18	1.42E-10	6.47321E-14	7.49214E-13
106-93-4	4.81E-22	7.54507E-22	4.43E-14	2.0139E-17	2.33093E-16
106-97-8	0.00E+00	0	0.00E+00	0	0
106-99-0	1.51E-31	6.83391E-32	4.01E-24	1.82408E-27	2.11121E-26
108-87-2	0.00E+00	0	0.00E+00	0	0
110-54-3	0.00E+00	0	0.00E+00	0	0
110-82-7	5.74E-40	4.02878E-40	2.37E-32	1.07535E-35	1.24462E-34
111-84-2	0.00E+00	0	0.00E+00	0	0
118-74-1	1.66E-25	3.94526E-25	2.32E-17	1.05304E-20	1.2188E-19
120-12-7	2.69E-19	3.99759E-19	2.35E-11	1.06701E-14	1.23497E-13
127-18-4	5.79E-29	8.01627E-29	4.71E-21	2.13968E-24	2.47648E-23
1336-36-3	6.91E-25	1.85707E-24	1.09E-16	4.95683E-20	5.73708E-19
144-62-7	3.23E-19	2.43037E-19	1.43E-11	6.48705E-15	7.50816E-14
208-96-8	1.00E-19	1.27554E-19	7.49E-12	3.40463E-15	3.94055E-14
50-32-8	1.09E-24	2.28791E-24	1.34E-16	6.1068E-20	7.06806E-19
56-23-5	6.93E-30	8.90245E-30	5.23E-22	2.37621E-25	2.75024E-24
60-35-5	1.09E-18	5.37572E-19	3.16E-11	1.43487E-14	1.66073E-13
60-57-1	2.17E-25	6.88741E-25	4.04E-17	1.83837E-20	2.12774E-19
62-75-9	5.69E-18	3.51619E-18	2.06E-10	9.38518E-14	1.08629E-12
75-12-7	6.44E-18	2.42249E-18	1.42E-10	6.46603E-14	7.48383E-13
76-15-3	0.00E+00	0	0.00E+00	0	0
8001-35-2	2.56E-25	8.8507E-25	5.20E-17	2.3624E-20	2.73426E-19
88-89-1	9.50E-23	1.81582E-22	1.07E-14	4.84673E-18	5.60964E-17
126-73-8	1.11E-18	2.45833E-18	1.44E-10	6.5617E-14	7.59456E-13

Appendix B
Calculation: Estimation of Non-SSFM Represented Organic Emission Rates Required to Support the Integrated Emissions Baseline Report

24590-WTP-M4C-FRP-00005, Rev A

Calculation Cover Sheet

RIVER PROTECTION PROJECT-WASTE TREATMENT PLANT		JOB NO.:	24590
CALC NO.	24590-WTP-M4C-FRP-00005	GROUP	Process Operations
SUBJECT	Estimation of Non-SSFM Represented Organic Emission Rates Required to Support the Integrated Emissions Baseline Report		
CALCULATION STATUS DESIGNATION	☒ PRELIMINARY ☐ COMMITTED ☐ CONFIRMED ☐ SUPERSEDED ☐ VOIDED		

SOFTWARE APPLICATION	N/A	QAS	PROGRAM NAME	VERSION/RELEASE NO.
	☒	☐ YES ☐ NO		

Notes/Comments

Calculations were performed on a Compaq Personal Computer using the software Microsoft Excel® 97 SR-2.

First checkers, John Cook and Cuong Nguyen, checked the inputs, outputs, mathematical accuracy, and procedural compliance for the whole calculation.

Second checker, Robert Rieck, checked the inputs, format, and procedural compliance.

This calculation does not affect any structures, systems, components, or services of the WTP.

NO.	REASON FOR REVISION	TOTAL NO. OF SHEETS	LAST SHEET NO.	BY	CHECKED	APPROVED/ ACCEPTED	DATE
A	Initial Issue	102	102	E. Bedios	J. Cook/C. Nguyen/R. Rieck	O. Block	5/21/03

RECORD OF REVISIONS

Contents

1 Objective 2
2 Inputs 2
3 Background 29
4 Applicable Codes and Standards 29
5 Methodology 29
6 Assumptions 30
7 Calculations 30
7.1 Feed Rate 31
7.2 Pretreatment Vessel Vent Analysis 32
7.3 Pretreatment PJM/RFD Analysis 34
7.4 LAW Vitrification Analysis 36
7.5 HLW Vitrification Analysis 41
7.6 HLW PJM/RFD Analysis 46
8 Results and Conclusion 48
9 References 52
10 Attachments 52
Appendix A Stream Reports 53
Appendix B Calculations 76

List of Tables

Table A-1 PJV32 Stream Report 54
Table A-2 FRP14 Stream Report 56
Table A-3 PVP01 Stream Report 58
Table A-4 PJV04 Stream Report 60
Table A-5 LMP06 Stream Report 62
Table A-6 LFP06 Stream Report 64
Table A-7 RLD32 Stream Report 66
Table A-8 RLD33 Stream Report 68
Table A-9 RLD34 Stream Report 70
Table A-10 HMP06 Stream Report 72

Table A-11 HOP10 Stream Report 74
Table B-1 Feed Rate 77
Table B-2 PVP01 – Unabated Pretreatment Vessel Vent System 79
Table B-3 PVP12 – Abated Pretreatment Vessel Vent System 81
Table B-4 PJV04 – Unabated Pretreatment PJM/RFD 83
Table B-5 PJV11 - Abated Pretreatment PJM/RFD 85
Table B-6 LMP06 - Unabated LAW Melter 87
Table B-7 LVP01 – LAW Vessel Ventilation 89
Table B-8 LVP26 – Abated LAW Melter Offgas System 91
Table B-9 HMP06 – Unabated HLW Melter 93
Table B-10 HOP10 – HLW Vessel Ventilation 95
Table B-11 HOP33 – Abated HLW Melter Offgas System 97
Table B-12 PJV32 – Unabated HLW PJM/RFD 99
Table B-13 PJV34 – Abated HLW PJM/RFD 101

1 Objective

The objective of this calculation is to estimate the emission rates for all organic constituents that are not tracked through the Steady State Flowsheet Model to support the update of the *Integrated Emissions Baseline Report for the River Protection Project Waste Treatment Plant* (RPT-W375-ES00001). The estimation of the releases is based on the performance of the representative compounds that are tracked.

2 Inputs

- Organic constituent feed concentrations were obtained from Table 8 of the *RPP-WTP Waste Feed Assessment* (RPT-24590-EN00003). These concentrations are shown below in units of milligrams per liter. It should be noted that two CAS#s had to be updated as they were incorrectly represented in this reference. These are CAS# 25551-13-7 (which was represented as 2551-13-7), and 95-50-1 (which was represented as 95-55-1). This change in the CAS#s applies to all the references used as inputs in this calculation. Also the feed concentration of 1336-36-3 should read 29.4 mg/l (as shown below) instead of 0.4 mg/l due to changes in the feed concentrations in the feed vector.

Organic Constituents Feed Concentrations

CAS#	Compound	Conc mg/l	CAS#	Compound	Conc mg/l
100-21-0	p-Phthalic acid	84.8	205-99-2	Benzo(b)fluoranthene	84.8
10061-01-5	cis-1,3-Dichloropropene	18.7	206-44-0	Fluoranthene	84.8
106-93-4	Ethylene dibromide (Dibromethane)	84.8	207-08-9	Benzo(k)fluoranthene	84.8
106-97-8	Butane	18.7	2234-13-1	Octachloronaphthalene	84.8

CALCULATION SHEET

PROJECT: WTP
JOB NO.: 24590
CALC NO.: 24590-WTP-M4C-FRP-00005
SHEET REV: A
SHEET NO.: 3

BY: E. Berrios
DATE: 05/21/03

SUBJECT: Estimation of Non-SSFM Represented Organic Emission Rates Required to Support the Integrated Emissions Baseline Report

CAS#	Compound	Conc mg/l	CAS#	Compound	Conc mg/l
106-99-0	1,3-Butadiene	18.7	224-42-0	Dibenz[a,j]acridine	84.8
108-87-2	Methylcyclohexane	18.7	226-36-8	Dibenz[a,h]acridine	84.8
108-88-3	Toluene	18.7	2385-85-5	Mirex	84.8
108-95-2	Phenol	84.8	25551-13-7	Trimethyl benzene	18.7
110-54-3	n-Hexane	18.7	26140-60-3	Terphenyls	84.8
110-82-7	Cyclohexane	18.7	27154-33-2	Trichlorofluoroethane	18.7
111-84-2	n-Nonane	18.7	287-92-3	Cyclopentane	18.7
118-74-1	Hexachlorobenzene	1.8	319-84-6	Hexachlorocyclohexane (Lindane) Alpha BHC	0.3
120-12-7	Anthracene	84.8	319-86-8	Delta-BHC	0.3
120-82-1	1,2,4-Trichlorobenzene	18.7	3697-24-3	5-Methylchrysene	84.8
122-39-4	N,N-Diphenylamine	18.7	3825-26-1	Ammonium perfluorooctanoate	84.8
126-73-8	Tributyl phosphate	84.8	465-73-6	Isodrin	0.6
127-18-4	Perchloroethylene (tetrachloroethylene)	18.7	50-00-0	Formaldehyde	18.7
129-00-0	Pyrene	84.8	50-29-3	4,4-DDT	0.6
132-64-9	Dibenzofuran	84.8	53-70-3	Dibenzo(a,h)anthracene	0.1
1336-36-3	Polychlorinated biphenyls (PCBs)	29.4	540-59-0	1,2-Dichloroethylene	18.7
144-62-7	Oxalic acid	8.5	540-84-1	2,2,4-Trimethylpentane	18.7
208-96-8	Acenaphthylene	84.8	541-73-1	1,3-Dichlorobenzene	18.7
218-01-9	Chrysene	84.8	563-80-4	3-Methyl-2-butanone	18.7
309-00-2	Aldrin	1	56-49-5	3-Methylcholanthrene	84.8
319-85-7	Hexachlorocyclohexane (Lindane) Beta BHC	0.3	56-55-3	Benzo(a)anthracene	84.8
4170-30-3	2-Butenaldehyde (2-Butenal or Crotonaldehyde)	18.7	591-78-6	2-Hexanone	18.7
50-32-8	Benzo(a)pyrene	1.1	59-50-7	4-Chloro-3-methylphenol	84.8
56-23-5	Carbon tetrachloride	18.7	59-89-2	N-Nitrosomorpholine	84.8
57-14-7	1,1-Dimethylhydrazine	84.8	602-87-9	5-Nitroacenaphthene	84.8
58-89-9	gamma-BHC (Lindane)	0.3	60-29-7	Ethyl ether	84.8
58-90-2	2,3,4,6-Tetrachlorophenol	84.8	60-34-4	Methylhydrazine	18.7
603-34-9	Triphenylamine	84.8	621-64-7	Di-n-Propylnitrosamine (N-Nitroso-di-n-propylamine)	84.8
60-35-5	Acetamide	18.7	624-83-9	Methyl isocyanate	18.7
60-57-1	Dieldrin	0.6	627-13-4	Nitric acid, propyl ester	84.8
62-75-9	N-Nitroso-N,N-dimethylamine (Dimethylnitrosamine)	158.4	630-20-6	1,1,1,2-Tetrachloroethane	18.7
71-43-2	Benzene	18.7	64-17-5	Ethyl alcohol	18.7
75-05-8	Acetonitrile	26.6	64-18-6	Formic acid	84.8
75-12-7	Formamide	84.8	64-19-7	Acetic acid	84.8
76-15-3	Chloropentafluoroethane	18.7	67-56-1	Methyl alcohol (Methanol)	18.7
76-44-8	Heptachlor	1.8	67-63-0	2-Propyl alcohol (Isopropanol; Propan-2-01)	18.7
79-01-6	Trichloroethylene	18.7	67-64-1	2-Propanone (Acetone)	101.8
8001-35-2	Toxaphene	0.7	67-66-3	Chloroform	18.7
84-66-2	Diethyl phthalate	84.8	67-72-1	Hexachloroethane	84.8

CALCULATION SHEET

PROJECT: WTP
JOB NO.: 24590
CALC NO.: 24590-WTP-M4C-FRP-00005
SHEET REV: A
SHEET NO.: 4

BY: E. Berrios
DATE: 05/21/03

SUBJECT: Estimation of Non-SSFM Represented Organic Emission Rates Required to Support the Integrated Emissions Baseline Report

CAS#	Compound	Conc mg/l	CAS#	Compound	Conc mg/l
84-74-2	Dibutyl phthalate	84.8	684-16-2	Hexafluoroacetone	18.7
87-68-3	Hexachlorobutadiene	18.7	71-23-8	n-Propyl alcohol	18.7
87-86-5	Pentachlorophenol	84.8	71-36-3	n-Butyl alcohol	18.7
88-85-7	2-sec-Butyl-4,6-dinitrophenol (Dinoseb)	84.8	71-55-6	Methyl chloroform (1,1,1-Trichloroethane)	18.7
88-89-1	Picric acid	84.8	72-20-8	Endrin	0.6
91-20-3	Naphthalene	2.8	72-43-5	Methoxychlor	2.8
98-86-2	Acetophenone	84.8	72-54-8	4,4-DDD	0.6
100-00-5	p-Nitrochlorobenzene	84.8	72-55-9	4,4-DDE	0.6
100-25-4	1,4-Dinitrobenzene	84.8	74-83-9	Bromomethane (Methyl bromide)	18.7
100-41-4	Ethyl benzene	18.7	74-87-3	Chloromethane (Methyl chloride)	18.7
100-42-5	Styrene	18.7	74-97-5	Bromochloromethane	18.7
10061-02-6	trans-1,3-Dichloropropene	18.7	74-99-7	Methylacetylene	84.8
101-55-3	4-Bromophenylphenyl ether	84.8	75-00-3	Chloroethane	18.7
101-84-8	Diphenyl ether	18.7	75-01-4	Vinyl chloride (1-Chloroethene)	84.8
106-35-4	3-Heptanone	18.7	75-07-0	Acetaldehyde	84.8
106-42-3	p-Xylene (Dimethyl benzene)	18.7	75-09-2	Dichloromethane (Methylene chloride)	18.7
106-46-7	1,4-Dichlorobenzene	18.7	75-15-0	Carbon disulfide	18.7
106-88-7	1,2-Epoxybutane	18.7	75-21-8	Ethylene oxide (Oxirane)	18.7
107-02-8	Acrolein	18.7	75-27-4	Bromodichloromethane	18.7
107-05-1	3-Chloropropene (Allyl chloride)	18.7	75-34-3	1,1-Dichloroethane	18.7
107-06-2	1,2-Dichloroethane (Ethylene chloride)	18.7	75-35-4	1,1-Dichloroethene (Vinylidene chloride)	18.7
107-12-0	Propionitrile	18.7	75-43-4	Dichlorofluoromethane	18.7
107-13-1	Acrylonitrile	18.7	75-45-6	Chlorodifluoromethane	18.7
107-18-6	2-Propene-1-ol	84.8	75-50-3	Trimethylamine	18.7
107-31-3	Formic acid, methyl ester	84.8	75-52-5	Nitromethane	84.8
107-66-4	Dibutylphosphate	84.8	75-55-8	2-Methylaziridine	84.8
107-87-9	2-Pentanone	18.7	75-61-6	Difluorodibromomethane	18.7
108-03-2	1-Nitropropane	84.8	75-63-8	Trifluorobromomethane	18.7
108-05-4	Vinyl acetate	84.8	75-65-0	2-Methyl-2-propanol	18.7
108-10-1	Hexone (4-Methyl-2-pentanone or MIBK)	18.7	75-69-4	Trichlorofluoromethane	18.7
108-20-3	Bis(isopropyl)ether	18.7	75-71-8	Dichlorodifluoromethane	18.7
108-38-3	m-Xylene (Dimethyl benzene)	18.7	75-99-0	2,2-Dichloropropionic acid	84.8
108-39-4	m-Cresol	18.7	76-03-9	Trichloroacetic acid	18.7
108-90-7	Chlorobenzene	18.7	76-11-9	1,1,1,2-Tetrachloro-2,2-difluoroethane	84.8
108-93-0	Cyclohexanol	18.7	76-12-0	1,1,2,2-Tetrachloro-1,2-difluoroethane	84.8
108-94-1	Cyclohexanone	18.7	76-13-1	1,2,2-Trichloro-1,1,2-trifluoroethane (Freon 113)	18.7
109-66-0	n-Pentane	18.7	76-14-2	1,2-Dichloro-1,1,2,2-tetrafluoroethane	18.7
109-99-9	Tetrahydrofuran	39.6	78-83-1	2-Methylpropyl alcohol (Isobutyl alcohol)	84.8
110-12-3	5-Methyl-2-hexanone	18.7	78-87-5	1,2-Dichloropropane	18.7
110-43-0	2-Heptanone	18.7	78-92-2	1-Methylpropyl alcohol (2-Butanol)	18.7
110-62-3	n-Valeraldehyde	84.8	78-93-3	Methyl ethyl ketone (MEK, 2-Butanone)	18.7
110-83-8	Cyclohexene	18.7	79-00-5	1,1,2-Trichloroethane	18.7

CALCULATION SHEET

PROJECT: WTP
JOB NO.: 24590
CALC NO.: 24590-WTP-M4C-FRP-00005
SHEET REV: A
SHEET NO.: 5

BY: E. Berrios
DATE: 05/21/03

SUBJECT: Estimation of Non-SSFM Represented Organic Emission Rates Required to Support the Integrated Emissions Baseline Report

CAS#	Compound	Conc mg/l	CAS#	Compound	Conc mg/l
110-86-1	Pyridine	84.8	79-09-4	Propionic acid	84.8
111-65-9	n-Octane	18.7	79-10-7	2-Propenoic acid	84.8
111-76-2	Ethylene glycol monobutyl ether	84.8	79-20-9	Methyl acetate	84.8
117-81-7	Bis(2-ethylhexyl)phthalate (DEHP)	84.8	79-34-5	1,1,2,2-Tetrachloroethane	18.7
117-84-0	n-Dioctyl phthalate	84.8	82-68-8	Pentachloronitrobenzene (PCBN or quintobenzene)	84.8
120-83-2	2,4-Dichlorophenol	84.8	83-32-9	Acenaphthene	84.8
121-44-8	Triethylamine	18.7	85-01-8	Phenanthrene	84.8
121-69-7	Dimethylaniline	18.7	85-68-7	Butylbenzyl phthalate	84.8
123-19-3	4-Heptanone	18.7	86-73-7	Fluorene	84.8
123-38-6	n-Propionaldehyde	18.7	88-06-2	2,4,6-Trichlorophenol	84.8
123-51-3	3-Methyl-1-butanol	18.7	88-72-2	2-Nitrotoluene	18.7
123-86-4	Acetic acid n-butyl ester	84.8	88-75-5	2-Nitrophenol	84.8
123-91-1	1,4-Dioxane	50.9	91-22-5	Quinoline	84.8
126-98-7	2-Methyl-2-propenenitrile (Methacrylonitrile)	18.7	91-58-7	2-Chloronapthalene	84.8
127-19-5	N,N-Dimethylacetamide	18.7	92-52-4	1,1`-Biphenyl	84.8
128-37-0	2,6-Bis(tert-butyl)-4-methylphenol	84.8	92-93-3	4-Nitrobiphenyl	84.8
1321-64-8	Pentachloronaphthalene	84.8	93-72-1	Silvex (2,4,5-TP)	84.8
1321-65-9	Trichloronaphthalene	84.8	93-76-5	2,4,5-T	84.8
1335-87-1	Hexachloronaphthalene	84.8	94-75-7	2,4-D and esters (160C typed)	84.8
1335-88-2	Tetrachloronaphthalene	84.8	95-13-6	Indene	84.8
141-78-6	Acetic acid ethyl ester (Ethyl acetate)	84.8	95-47-6	o-Xylene	18.7
141-79-7	4-Methyl-3-penten-2-one	84.8	95-48-7	o-Cresol (2-Methylphenol)	18.7
142-82-5	n-Heptane	18.7	95-49-8	2-Chlorotoluene	84.8
156-60-5	trans-1,2-Dichloroethylene	18.7	95-50-1	o-Dichlorobenzene (1,2-Dichlorobenzene)	18.7
1582-09-8	Trifluralin	84.8	95-57-8	2-Chlorophenol	84.8
1634-04-4	Methyl tert-butyl ether	18.7	95-95-4	2,4,5-Trichlorophenol	84.8
1836-75-5	Nitrofen	84.8	96-18-4	1,2,3-Trichloropropane	1.1
189-55-9	Dibenzo[a,i]pyrene	84.8	96-22-0	3-Pentanone	18.7
189-64-0	Dibenzo[a,h]pyrene	84.8	96-69-5	Bis(3-tert-butyl-4-hydroxy-6-methyl-phenyl)sulfide	84.8
191-24-2	Benzo(g,h,i)perylene	84.8	98-51-1	p-tert-Butyltoluene	84.8
191-30-0	Benzo[a,i]pyrene	84.8	98-82-8	Cumene	84.8
192-65-4	Dibenzo[a,e]pyrene	84.8	98-83-9	alpha-Methylstyrene	18.7
193-39-5	Indeno(1,2,3-cd)pyrene	84.8	98-95-3	Nitrobenzene	84.8
205-82-3	Benzo(j)fluoranthene	84.8			

- Constituents were separated into groups based on similar physical and chemical characteristics and expected behavior throughout the flowsheet. The constituents and their respected group numbers are presented below along with the phase that they are expected to be in the offgas. The constituents with an "X" under the Modeled column indicate the constituents that were included in the flowsheet. This data was obtained from the *Integrated Emissions Baseline Report for the River Protection Project Waste Treatment Plant* (RPT-W375-

ES00001), Table 4. There has been some updates to phases and they are reflected on this input table and all other pertaining tables. These updates were obtained from the memorandum titled *Phase Determination for COPCs Potentially Emitted from the Hanford Tank Waste Treatment and Immobilization Plant (WTP)* (CCN# 057415).

Organic Constituents Grouping

CAS#	Compound	Group	Modeled	Phase
100-00-5	p-Nitrochlorobenzene	10		vapor
100-21-0	p-Phthalic acid	1	X	vapor
100-25-4	1,4-Dinitrobenzene	6		particle
100-41-4	Ethyl benzene	20		vapor
100-42-5	Styrene	19		vapor
10061-01-5	cis-1,3-Dichloropropene	19	X	vapor
10061-02-6	trans-1,3-Dichloropropene	17		vapor
101-55-3	4-Bromophenylphenyl ether	14		vapor
101-84-8	Diphenyl ether	16		vapor
106-35-4	3-Heptanone	14		vapor
106-42-3	p-Xylene (Dimethyl benzene)	19		vapor
106-46-7	1,4-Dichlorobenzene	18		vapor
106-88-7	1,2-Epoxybutane	15		vapor
106-93-4	Ethylene dibromide (Dibromethane)	16	X	vapor
106-97-8	Butane	26	X	vapor
106-99-0	1,3-Butadiene	23	X	vapor
107-02-8	Acrolein	14		vapor
107-05-1	3-Chloropropene (Allyl chloride)	20		vapor
107-06-2	1,2-Dichloroethane (Ethylene chloride)	17		vapor
107-12-0	Propionitrile	13		vapor
107-13-1	Acrylonitrile	14		vapor
107-18-6	2-Propene-1-ol	10		vapor
107-31-3	Formic acid, methyl ester	15		vapor
107-66-4	Dibutylphosphate	5		particle
107-87-9	2-Pentanone	14		vapor
108-03-2	1-Nitropropane	14		vapor
108-05-4	Vinyl acetate	16		vapor
108-10-1	Hexone (4-Methyl-2-pentanone or MIBK)	14		vapor
108-20-3	Bis(isopropyl)ether	18		vapor
108-38-3	m-Xylene (Dimethyl benzene)	19		vapor
108-39-4	m-Cresol	9		vapor
108-87-2	Methylcyclohexane	25	X	vapor
108-88-3	Toluene	19	X	vapor
108-90-7	Chlorobenzene	19		vapor
108-93-0	Cyclohexanol	10		vapor
108-94-1	Cyclohexanone	11		vapor
108-95-2	Phenol	8	X	vapor
109-66-0	n-Pentane	26		vapor
109-99-9	Tetrahydrofuran	13		vapor
110-12-3	5-Methyl-2-hexanone	15		vapor

CALCULATION SHEET

PROJECT: WTP
JOB NO.: 24590
CALC NO.: 24590-WTP-M4C-FRP-00005
SHEET REV: A
SHEET NO.: 7

BY: E. Berrios
DATE: 05/21/03

SUBJECT: Estimation of Non-SSFM Represented Organic Emission Rates Required to Support the Integrated Emissions Baseline Report

CAS#	Compound	Group	Modeled	Phase
110-43-0	2-Heptanone	15		vapor
110-54-3	n-Hexane	27	X	vapor
110-62-3	n-Valeraldehyde	15		vapor
110-82-7	Cyclohexane	24	X	vapor
110-83-8	Cyclohexene	22		vapor
110-86-1	Pyridine	11		vapor
111-65-9	n-Octane	28		vapor
111-76-2	Ethylene glycol monobutyl ether	9		vapor
111-84-2	n-Nonane	28	X	vapor
117-81-7	Bis(2-ethylhexyl)phthalate (DEHP)	30		particle
117-84-0	n-Dioctyl phthalate	32		particle
118-74-1	Hexachlorobenzene	18	X	vapor
120-12-7	Anthracene	13	X	vapor
120-82-1	1,2,4-Trichlorobenzene	17	X	vapor
120-83-2	2,4-Dichlorophenol	10		vapor
121-44-8	Triethylamine	15		vapor
121-69-7	Dimethylaniline	13		vapor
122-39-4	N,N-Diphenylamine	10	X	vapor
123-19-3	4-Heptanone	13		vapor
123-38-6	n-Propionaldehyde	14		vapor
123-51-3	3-Methyl-1-butanol	12		vapor
123-86-4	Acetic acid n-butyl ester	16		vapor
123-91-1	1,4-Dioxane	10		vapor
126-73-8	Tributyl phosphate	7	X	vapor
126-98-7	2-Methyl-2-propenenitrile (Methacrylonitrile)	16		vapor
127-18-4	Perchloroethylene (tetrachloroethylene)	21	X	vapor
127-19-5	N,N-Dimethylacetamide	5		vapor
128-37-0	2,6-Bis(tert-butyl)-4-methylphenol	32		vapor
129-00-0	Pyrene	33	X	particle
1321-64-8	Pentachloronaphthalene	14		particle
1321-65-9	Trichloronaphthalene	15		vapor
132-64-9	Dibenzofuran	15	X	vapor
1335-87-1	Hexachloronaphthalene	14		particle
1335-88-2	Tetrachloronaphthalene	15		particle
1336-36-3	Polychlorinated biphenyls (PCBs)	35	X	particle
141-78-6	Acetic acid ethyl ester (Ethyl acetate)	14		vapor
141-79-7	4-Methyl-3-penten-2-one	13		vapor
142-82-5	n-Heptane	27		vapor
144-62-7	Oxalic acid	3	X	vapor
156-60-5	trans-1,2-Dichloroethylene	20		vapor
1582-09-8	Trifluralin	14		particle
1634-04-4	Methyl tert-butyl ether	16		vapor
1836-75-5	Nitrofen	30		particle
189-55-9	Dibenzo[a,i]pyrene	5		particle
189-64-0	Dibenzo[a,h]pyrene	5		particle

CALCULATION SHEET

PROJECT: WTP
JOB NO.: 24590
CALC NO.: 24590-WTP-M4C-FRP-00005
SHEET REV: A
SHEET NO.: 8

BY: E. Berrios
DATE: 05/21/03

SUBJECT: Estimation of Non-SSFM Represented Organic Emission Rates Required to Support the Integrated Emissions Baseline Report

CAS#	Compound	Group	Modeled	Phase
191-24-2	Benzo(g,h,i)perylene	30		particle
191-30-0	Benzo[a,i]pyrene	5		particle
192-65-4	Dibenzo[a,e]pyrene	5		particle
193-39-5	Indeno(1,2,3-cd)pyrene	30		particle
205-82-3	Benzo(j)fluoranthene	7		particle
205-99-2	Benzo(b)fluoranthene	30		particle
206-44-0	Fluoranthene	33		particle
207-08-9	Benzo(k)fluoranthene	30		particle
208-96-8	Acenaphthylene	14	X	vapor
218-01-9	Chrysene	32	X	particle
2234-13-1	Octachloronaphthalene	14		particle
224-42-0	Dibenz[a,j]acridine	4		particle
226-36-8	Dibenz[a,h]acridine	4		particle
2385-85-5	Mirex	17		vapor
25551-13-7	Trimethyl benzene	19		vapor
26140-60-3	Terphenyls	34		particle
27154-33-2	Trichlorofluoroethane	23		vapor
287-92-3	Cyclopentane	24		vapor
309-00-2	Aldrin	34	X	particle
319-84-6	Hexachlorocyclohexane (Lindane) Alpha BHC	33		vapor
319-85-7	Hexachlorocyclohexane (Lindane) Beta BHC	30	X	particle
319-86-8	Delta-BHC	30		particle
3697-24-3	5-Methylchrysene	32		particle
3825-26-1	Ammonium perfluorooctanoate	14		particle
4170-30-3	2-Butenaldehyde (2-Butenal or Crotonaldehyde)	11	X	vapor
465-73-6	Isodrin	35		vapor
50-00-0	Formaldehyde	8		vapor
50-29-3	4,4-DDT	33		particle
50-32-8	Benzo(a)pyrene	30	X	particle
53-70-3	Dibenzo(a,h)anthracene	7		particle
540-59-0	1,2-Dichloroethylene	19		vapor
540-84-1	2,2,4-Trimethylpentane	28		vapor
541-73-1	1,3-Dichlorobenzene	19		vapor
56-23-5	Carbon tetrachloride	22	X	vapor
563-80-4	3-Methyl-2-butanone	14		vapor
56-49-5	3-Methylcholanthrene	28		particle
56-55-3	Benzo(a)anthracene	33		particle
57-14-7	1,1-Dimethylhydrazine	12	X	vapor
58-89-9	gamma-BHC (Lindane)	32	X	particle
58-90-2	2,3,4,6-Tetrachlorophenol	11	X	vapor
591-78-6	2-Hexanone	14		vapor
59-50-7	4-Chloro-3-methylphenol	32		particle
59-89-2	N-Nitrosomorpholine	6		vapor
602-87-9	5-Nitroacenaphthene	9		particle
60-29-7	Ethyl ether	17		vapor

CALCULATION SHEET

PROJECT: WTP
JOB NO.: 24590
CALC NO.: 24590-WTP-M4C-FRP-00005
SHEET REV: A
SHEET NO.: 9

BY: E. Berrios
DATE: 05/21/03

SUBJECT: Estimation of Non-SSFM Represented Organic Emission Rates Required to Support the Integrated Emissions Baseline Report

CAS#	Compound	Group	Modeled	Phase
603-34-9	Triphenylamine	32	X	vapor
60-34-4	Methylhydrazine	10		vapor
60-35-5	Acetamide	5	X	vapor
60-57-1	Dieldrin	33	X	particle
621-64-7	Di-n-Propylnitrosamine (N-Nitroso-di-n-propylamine)	10		vapor
624-83-9	Methyl isocyanate	17		vapor
627-13-4	Nitric acid, propyl ester	17		vapor
62-75-9	N-Nitroso-N,N-dimethylamine (Dimethylnitrosamine)	9	X	vapor
630-20-6	1,1,1,2-Tetrachloroethane	18		vapor
64-17-5	Ethyl alcohol	10		vapor
64-18-6	Formic acid	7		vapor
64-19-7	Acetic acid	6		vapor
67-56-1	Methyl alcohol (Methanol)	10		vapor
67-63-0	2-Propyl alcohol (Isopropanol; Propan-2-01)	11		vapor
67-64-1	2-Propanone (Acetone)	13		vapor
67-66-3	Chloroform	19		vapor
67-72-1	Hexachloroethane	19		vapor
684-16-2	Hexafluoroacetone	19		vapor
71-23-8	n-Propyl alcohol	11		vapor
71-36-3	n-Butyl alcohol	11		vapor
71-43-2	Benzene	19	X	vapor
71-55-6	Methyl chloroform (1,1,1-Trichloroethane)	21		vapor
72-20-8	Endrin	32		particle
72-43-5	Methoxychlor	7		particle
72-54-8	4,4-DDD	32		particle
72-55-9	4,4-DDE	34		particle
74-83-9	Bromomethane (Methyl bromide)	19		vapor
74-87-3	Chloromethane (Methyl chloride)	20		vapor
74-97-5	Bromochloromethane	17		vapor
74-99-7	Methylacetylene	20		vapor
75-00-3	Chloroethane	20		vapor
75-01-4	Vinyl chloride (1-Chloroethene)	22		vapor
75-05-8	Acetonitrile	13	X	vapor
75-07-0	Acetaldehyde	13		vapor
75-09-2	Dichloromethane (Methylene chloride)	19		vapor
75-12-7	Formamide	4	X	vapor
75-15-0	Carbon disulfide	20		vapor
75-21-8	Ethylene oxide (Oxirane)	15		vapor
75-27-4	Bromodichloromethane	18		vapor
75-34-3	1,1-Dichloroethane	19		vapor
75-35-4	1,1-Dichloroethene (Vinylidene chloride)	22		vapor
75-43-4	Dichlorofluoromethane	20		vapor
75-45-6	Chlorodifluoromethane	22		vapor
75-50-3	Trimethylamine	14		vapor

CALCULATION SHEET

PROJECT: WTP
JOB NO.: 24590
CALC NO.: 24590-WTP-M4C-FRP-00005
SHEET REV: A
SHEET NO.: 10

BY: E. Berrios
DATE: 05/21/03

SUBJECT: Estimation of Non-SSFM Represented Organic Emission Rates Required to Support the Integrated Emissions Baseline Report

CAS#	Compound	Group	Modeled	Phase
75-52-5	Nitromethane	13		vapor
75-55-8	2-Methylaziridine	11		vapor
75-61-6	Difluorodibromomethane	22		vapor
75-63-8	Trifluorobromomethane	25		vapor
75-65-0	2-Methyl-2-propanol	11		vapor
75-69-4	Trichlorofluoromethane	23		vapor
75-71-8	Dichlorodifluoromethane	25		vapor
75-99-0	2,2-Dichloropropionic acid	6		vapor
76-03-9	Trichloroacetic acid	5		vapor
76-11-9	1,1,1,2-Tetrachloro-2,2-difluoroethane	24		vapor
76-12-0	1,1,2,2-Tetrachloro-1,2-difluoroethane	23		vapor
76-13-1	1,2,2-Trichloro-1,1,2-trifluoroethane (Freon 113)	25		vapor
76-14-2	1,2-Dichloro-1,1,2,2-tetrafluoroethane	28		vapor
76-15-3	Chloropentafluoroethane	29	X	vapor
76-44-8	Heptachlor	16	X	vapor
78-83-1	2-Methylpropyl alcohol (Isobutyl alcohol)	11		vapor
78-87-5	1,2-Dichloropropane	19		vapor
78-92-2	1-Methylpropyl alcohol (2-Butanol)	11		vapor
78-93-3	Methyl ethyl ketone (MEK, 2-Butanone)	13		vapor
79-00-5	1,1,2-Trichloroethane	17		vapor
79-01-6	Trichloroethylene	20	X	vapor
79-09-4	Propionic acid	8		vapor
79-10-7	2-Propenoic acid	8		vapor
79-20-9	Methyl acetate	14		vapor
79-34-5	1,1,2,2-Tetrachloroethane	16		vapor
8001-35-2	Toxaphene	10	X	particle
82-68-8	Pentachloronitrobenzene (PCBN or quintobenzene)	13		vapor
83-32-9	Acenaphthene	15		vapor
84-66-2	Diethyl phthalate	8	X	vapor
84-74-2	Dibutyl phthalate	31	X	particle
85-01-8	Phenanthrene	13		vapor
85-68-7	Butylbenzyl phthalate	31		particle
86-73-7	Fluorene	14		particle
87-68-3	Hexachlorobutadiene	20	X	vapor
87-86-5	Pentachlorophenol	6	X	vapor
88-06-2	2,4,6-Trichlorophenol	10		vapor
88-72-2	2-Nitrotoluene	12		vapor
88-75-5	2-Nitrophenol	12		vapor
88-85-7	2-sec-Butyl-4,6-dinitrophenol (Dinoseb)	8	X	particle
88-89-1	Picric acid	2	X	particle
91-20-3	Naphthalene	16	X	vapor
91-22-5	Quinoline	9		vapor
91-58-7	2-Chloronapthalene	16		vapor
92-52-4	1,1`-Biphenyl	16		vapor
92-93-3	4-Nitrobiphenyl	10		particle

CAS#	Compound	Group	Modeled	Phase
93-72-1	Silvex (2,4,5-TP)	5		particle
93-76-5	2,4,5-T	5		particle
94-75-7	2,4-D and esters (160C typed)	6		vapor
95-13-6	Indene	18		vapor
95-47-6	o-Xylene	19		vapor
95-48-7	o-Cresol (2-Methylphenol)	9		vapor
95-49-8	2-Chlorotoluene	19		vapor
95-50-1	o-Dichlorobenzene (1,2-Dichlorobenzene)	18		vapor
95-57-8	2-Chlorophenol	11		vapor
95-95-4	2,4,5-Trichlorophenol	9		vapor
96-22-0	3-Pentanone	14		vapor
96-69-5	Bis(3-tert-butyl-4-hydroxy-6-methyl-phenyl)sulfide	19		particle
98-51-1	p-tert-Butyltoluene	21		vapor
98-82-8	Cumene	20		vapor
98-83-9	alpha-Methylstyrene	19		vapor
98-86-2	Acetophenone	11	X	vapor
98-95-3	Nitrobenzene	12		vapor

- Each organic constituent has a specific removal efficiency (i.e. decontamination factor - DF) that has been specified by engineering calculations and Research and Technology testing results. The DFs applied in this calculation are presented below, per facility and unit operation, and are based on the *Updated Basis for the WTP Emissions Profile* (CCN# 044663 and CCN# 053500). For the DFs in the PT HEME and PT Caustic Scrubber, the particle bound constituents are expected to be removed with the same efficiency as any other particulate. Vapor constituents are not expected to be removed. Thus for these two unit operations, the DFs presented in Table 2.13-4 of the *Flowsheet Bases, Assumptions, and Requirements* (24590-WTP-RPT-PT-02-005) are used. For the HEPA filters, the DF is based on the specified value in the *Best Available Radionuclide Control Technology Analysis for the WTP* (24590-WTP-RPT-ENV-01-004). This DF is applied to all particle-bound constituents and it is set at 200,000 (2,000 x 100).

CALCULATION SHEET

PROJECT: WTP
JOB NO.: 24590
CALC NO.: 24590-WTP-M4C-FRP-00005
SHEET REV: A
SHEET NO.: 12

BY: E. Berrios
DATE: 05/21/03

SUBJECT: Estimation of Non-SSFM Represented Organic Emission Rates Required to Support the Integrated Emissions Baseline Report

Pretreatment Facility Organic Constituents DFs per Unit Operation

CAS Registry Number	Phase	PT HEME	PT Thermal Oxidizer	PT Caustic Scrubber	PT Carbon Bed Adsorber	PT PJV Demister	All HEPAs (First)	All HEPAs (Second)
100-00-5	vapor	1	10000	1	5	1	1	1
100-21-0	vapor	1	20	1	50	1	1	1
100-25-4	particle-bound	200	10000	3.3	5	5	2000	100
100-41-4	vapor	1	10000	1	1	1	1	1
100-42-5	vapor	1	10000	1	1	1	1	1
10061-01-5	vapor	1	100	1	1	1	1	1
10061-02-6	vapor	1	50	1	1	1	1	1
101-55-3	vapor	1	3.333333	1	50	1	1	1
101-84-8	vapor	1	50	1	5	1	1	1
106-35-4	vapor	1	10000	1	1	1	1	1
106-42-3	vapor	1	1000	1	1	1	1	1
106-46-7	vapor	1	50	1	2	1	1	1
106-88-7	vapor	1	10000	1	1	1	1	1
106-93-4	vapor	1	1	1	10	1	1	1
106-97-8	vapor	1	10000	1	1	1	1	1
106-99-0	vapor	1	10000	1	1	1	1	1
107-02-8	vapor	1	10000	1	1	1	1	1
107-05-1	vapor	1	10000	1	1	1	1	1
107-06-2	vapor	1	10000	1	1	1	1	1
107-12-0	vapor	1	10000	1	1	1	1	1
107-13-1	vapor	1	10000	1	1	1	1	1
107-18-6	vapor	1	10000	1	1	1	1	1
107-31-3	vapor	1	10000	1	1	1	1	1
107-66-4	particle-bound	200	10000	3.3	1	5	2000	100
107-87-9	vapor	1	10000	1	1	1	1	1
108-03-2	vapor	1	10000	1	1	1	1	1
108-05-4	vapor	1	10000	1	1	1	1	1
108-10-1	vapor	1	10000	1	1	1	1	1

CALCULATION SHEET

PROJECT: WTP
JOB NO.: 24590
CALC NO.: 24590-WTP-M4C-FRP-00005
SHEET REV: A
SHEET NO.: 13

BY: E. Berrios
DATE: 05/21/03

SUBJECT: Estimation of Non-SSFM Represented Organic Emission Rates Required to Support the Integrated Emissions Baseline Report

Pretreatment Facility Organic Constituents DFs per Unit Operation

CAS Registry Number	Phase	PT HEME	PT Thermal Oxidizer	PT Caustic Scrubber	PT Carbon Bed Adsorber	PT PJV Demister	All HEPAs (First)	All HEPAs (Second)
108-20-3	vapor	1	10000	1	1	1	1	1
108-38-3	vapor	1	1000	1	1	1	1	1
108-39-4	vapor	1	1000	1	2	1	1	1
108-87-2	vapor	1	10000	1	1	1	1	1
108-88-3	vapor	1	10000	1	1	1	1	1
108-90-7	vapor	1	20	1	5	1	1	1
108-93-0	vapor	1	10000	1	2	1	1	1
108-94-1	vapor	1	10000	1	2	1	1	1
108-95-2	vapor	1	10	1	20	1	1	1
109-66-0	vapor	1	10000	1	1	1	1	1
109-99-9	vapor	1	10000	1	1	1	1	1
110-12-3	vapor	1	10000	1	1	1	1	1
110-43-0	vapor	1	10000	1	1	1	1	1
110-54-3	vapor	1	10000	1	1	1	1	1
110-62-3	vapor	1	10000	1	1	1	1	1
110-82-7	vapor	1	10000	1	1	1	1	1
110-83-8	vapor	1	10000	1	1	1	1	1
110-86-1	vapor	1	10000	1	1	1	1	1
111-65-9	vapor	1	10000	1	1	1	1	1
111-76-2	vapor	1	10000	1	2	1	1	1
111-84-2	vapor	1	10000	1	2	1	1	1
117-81-7	particle-bound	200	10000	3.3	5	5	2000	100
117-84-0	particle-bound	200	10000	3.3	5	5	2000	100
118-74-1	vapor	1	3.333333	1	50	1	1	1
120-12-7	vapor	1	1000	1	5	1	1	1
120-82-1	vapor	1	100	1	5	1	1	1
120-83-2	vapor	1	3.333333	1	50	1	1	1
121-44-8	vapor	1	10000	1	1	1	1	1
121-69-7	vapor	1	10000	1	2	1	1	1

CALCULATION SHEET

PROJECT: WTP
JOB NO.: 24590
CALC NO.: 24590-WTP-M4C-FRP-00005
SHEET REV: A
SHEET NO.: 14

BY: E. Berrios
DATE: 05/21/03

SUBJECT: Estimation of Non-SSFM Represented Organic Emission Rates Required to Support the Integrated Emissions Baseline Report

Pretreatment Facility Organic Constituents DFs per Unit Operation

CAS Registry Number	Phase	PT HEME	PT Thermal Oxidizer	PT Caustic Scrubber	PT Carbon Bed Adsorber	PT PJV Demister	All HEPAs (First)	All HEPAs (Second)
122-39-4	vapor	1	50	1	5	1	1	1
123-19-3	vapor	1	10000	1	1	1	1	1
123-38-6	vapor	1	10000	1	1	1	1	1
123-51-3	vapor	1	10000	1	1	1	1	1
123-86-4	vapor	1	10000	1	1	1	1	1
123-91-1	vapor	1	10000	1	1	1	1	1
126-73-8	vapor	1	10000	1	5	1	1	1
126-98-7	vapor	1	10000	1	1	1	1	1
127-18-4	vapor	1	1	1	10	1	1	1
127-19-5	vapor	1	10000	1	2	1	1	1
128-37-0	vapor	1	10000	1	5	1	1	1
129-00-0	particle-bound	200	3.333333	3.3	50	5	2000	100
1321-64-8	particle-bound	200	3.333333	3.3	50	5	2000	100
1321-65-9	vapor	1	3.333333	1	50	1	1	1
132-64-9	vapor	1	3.333333	1	50	1	1	1
1335-87-1	particle-bound	200	3.333333	3.3	50	5	2000	100
1335-88-2	particle-bound	200	3.333333	3.3	50	5	2000	100
1336-36-3	particle-bound	200	3.333333	3.3	50	5	2000	100
141-78-6	vapor	1	10000	1	1	1	1	1
141-79-7	vapor	1	10000	1	1	1	1	1
142-82-5	vapor	1	10000	1	1	1	1	1
144-62-7	vapor	1	10	1	20	1	1	1
156-60-5	vapor	1	10000	1	1	1	1	1
1582-09-8	particle-bound	200	10000	3.3	1	5	2000	100
1634-04-4	vapor	1	10000	1	1	1	1	1
1836-75-5	particle-bound	200	3.333333	3.3	50	5	2000	100
189-55-9	particle-bound	200	3.333333	3.3	50	5	2000	100
189-64-0	particle-bound	200	3.333333	3.3	50	5	2000	100
191-24-2	particle-bound	200	3.333333	3.3	50	5	2000	100

CALCULATION SHEET

PROJECT: WTP
JOB NO.: 24590
CALC NO.: 24590-WTP-M4C-FRP-00005
SHEET REV: A
SHEET NO.: 15

BY: E. Berrios
DATE: 05/21/03

SUBJECT: Estimation of Non-SSFM Represented Organic Emission Rates Required to Support the Integrated Emissions Baseline Report

Pretreatment Facility Organic Constituents DFs per Unit Operation

CAS Registry Number	Phase	PT HEME	PT Thermal Oxidizer	PT Caustic Scrubber	PT Carbon Bed Adsorber	PT PJV Demister	All HEPAs (First)	All HEPAs (Second)
191-30-0	particle	200	3.333333	3.3	50	5	2000	100
192-65-4	particle	200	3.333333	3.3	50	5	2000	100
193-39-5	particle	200	3.333333	3.3	50	5	2000	100
205-82-3	particle-bound	200	3.333333	3.3	50	5	2000	100
205-99-2	particle-bound	200	3.333333	3.3	50	5	2000	100
206-44-0	particle-bound	200	3.333333	3.3	50	5	2000	100
207-08-9	particle-bound	200	3.333333	3.3	50	5	2000	100
208-96-8	vapor	1	3.333333	1	50	1	1	1
218-01-9	particle-bound	200	3.333333	3.3	50	5	2000	100
2234-13-1	particle-bound	200	3.333333	3.3	50	5	2000	100
224-42-0	particle-bound	200	3.333333	3.3	50	5	2000	100
226-36-8	particle-bound	200	3.333333	3.3	50	5	2000	100
2385-85-5	vapor	1	3.333333	1	50	1	1	1
25551-13-7	vapor	1	1000	1	2	1	1	1
26140-60-3	particle-bound	200	3.333333	3.3	50	5	2000	100
27154-33-2	vapor	1	1	1	10	1	1	1
287-92-3	vapor	1	10000	1	1	1	1	1
309-00-2	particle-bound	200	3.333333	3.3	10	5	2000	100
319-84-6	vapor	1	3.333333	1	50	1	1	1
319-85-7	particle-bound	200	3.333333	3.3	50	5	2000	100
319-86-8	particle-bound	200	3.333333	3.3	50	5	2000	100
3697-24-3	particle-bound	200	3.333333	3.3	50	5	2000	100
3825-26-1	particle-bound	200	3.333333	3.3	50	5	2000	100
4170-30-3	vapor	1	10000	1	1	1	1	1
465-73-6	vapor	1	3.333333	1	50	1	1	1
50-00-0	vapor	1	10000	1	1	1	1	1
50-29-3	particle-bound	200	3.333333	3.3	50	5	2000	100
50-32-8	particle-bound	200	3.333333	3.3	50	5	2000	100
53-70-3	particle	200	3.333333	3.3	50	5	2000	100

CALCULATION SHEET

PROJECT: WTP
JOB NO.: 24590
CALC NO.: 24590-WTP-M4C-FRP-00005
SHEET REV: A
SHEET NO.: 16

BY: E. Berrios
DATE: 05/21/03

SUBJECT: Estimation of Non-SSFM Represented Organic Emission Rates Required to Support the Integrated Emissions Baseline Report

Pretreatment Facility Organic Constituents DFs per Unit Operation

CAS Registry Number	Phase	PT HEME	PT Thermal Oxidizer	PT Caustic Scrubber	PT Carbon Bed Adsorber	PT PJV Demister	All HEPAs (First)	All HEPAs (Second)
540-59-0	vapor	1	10000	1	1	1	1	1
540-84-1	vapor	1	10000	1	1	1	1	1
541-73-1	vapor	1	50	1	2	1	1	1
56-23-5	vapor	1	1	1	5	1	1	1
563-80-4	vapor	1	10000	1	1	1	1	1
56-49-5	particle-bound	200	3.333333	3.3	50	5	2000	100
56-55-3	particle-bound	200	3.333333	3.3	50	5	2000	100
57-14-7	vapor	1	10000	1	1	1	1	1
58-89-9	particle-bound	200	3.333333	3.3	50	5	2000	100
58-90-2	vapor	1	3.333333	1	10	1	1	1
591-78-6	vapor	1	1000	1	1	1	1	1
59-50-7	particle-bound	200	3.333333	3.3	20	5	2000	100
59-89-2	vapor	1	10000	1	2	1	1	1
602-87-9	particle-bound	200	3.333333	3.3	50	5	2000	100
60-29-7	vapor	1	10000	1	1	1	1	1
603-34-9	vapor	1	3.333333	1	50	1	1	1
60-34-4	vapor	1	10000	1	1	1	1	1
60-35-5	vapor	1	10000	1	2	1	1	1
60-57-1	particle-bound	200	3.333333	3.3	50	5	2000	100
621-64-7	vapor	1	10000	1	2	1	1	1
624-83-9	vapor	1	1000	1	1	1	1	1
627-13-4	vapor	1	10000	1	1	1	1	1
62-75-9	vapor	1	10000	1	2	1	1	1
630-20-6	vapor	1	1	1	10	1	1	1
64-17-5	vapor	1	10000	1	1	1	1	1
64-18-6	vapor	1	10000	1	1	1	1	1
64-19-7	vapor	1	10000	1	1	1	1	1
67-56-1	vapor	1	10000	1	1	1	1	1
67-63-0	vapor	1	10000	1	1	1	1	1

CALCULATION SHEET

PROJECT: WTP
JOB NO.: 24590
CALC NO.: 24590-WTP-M4C-FRP-00005
SHEET REV: A
SHEET NO.: 17

BY: E. Berrios
DATE: 05/21/03

SUBJECT: Estimation of Non-SSFM Represented Organic Emission Rates Required to Support the Integrated Emissions Baseline Report

Pretreatment Facility Organic Constituents DFs per Unit Operation

CAS Registry Number	Phase	PT HEME	PT Thermal Oxidizer	PT Caustic Scrubber	PT Carbon Bed Adsorber	PT PJV Demister	All HEPAs (First)	All HEPAs (Second)
67-64-1	vapor	1	10000	1	1	1	1	1
67-66-3	vapor	1	1	1	2	1	1	1
67-72-1	vapor	1	1	1	50	1	1	1
684-16-2	vapor	1	1	1	1	1	1	1
71-23-8	vapor	1	10000	1	1	1	1	1
71-36-3	vapor	1	10000	1	1	1	1	1
71-43-2	vapor	1	100	1	1	1	1	1
71-55-6	vapor	1	1000	1	1	1	1	1
72-20-8	particle-bound	200	3.333333	3.3	50	5	2000	100
72-43-5	particle-bound	200	3.333333	3.3	50	5	2000	100
72-54-8	particle-bound	200	3.333333	3.3	50	5	2000	100
72-55-9	particle-bound	200	3.333333	3.3	50	5	2000	100
74-83-9	vapor	1	1000	1	1	1	1	1
74-87-3	vapor	1	20	1	1	1	1	1
74-97-5	vapor	1	1	1	2	1	1	1
74-99-7	vapor	1	10000	1	1	1	1	1
75-00-3	vapor	1	1000	1	1	1	1	1
75-01-4	vapor	1	10000	1	1	1	1	1
75-05-8	vapor	1	1000	1	1	1	1	1
75-07-0	vapor	1	10000	1	1	1	1	1
75-09-2	vapor	1	20	1	1	1	1	1
75-12-7	vapor	1	10000	1	1	1	1	1
75-15-0	vapor	1	10000	1	1	1	1	1
75-21-8	vapor	1	10000	1	1	1	1	1
75-27-4	vapor	1	1	1	5	1	1	1
75-34-3	vapor	1	10000	1	1	1	1	1
75-35-4	vapor	1	10000	1	1	1	1	1
75-43-4	vapor	1	1000	1	1	1	1	1
75-45-6	vapor	1	50	1	1	1	1	1

CALCULATION SHEET

PROJECT: WTP
JOB NO.: 24590
CALC NO.: 24590-WTP-M4C-FRP-00005
SHEET REV: A
SHEET NO.: 18

BY: E. Berrios
DATE: 05/21/03

SUBJECT: Estimation of Non-SSFM Represented Organic Emission Rates Required to Support the Integrated Emissions Baseline Report

Pretreatment Facility Organic Constituents DFs per Unit Operation

CAS Registry Number	Phase	PT HEME	PT Thermal Oxidizer	PT Caustic Scrubber	PT Carbon Bed Adsorber	PT PJV Demister	All HEPAs (First)	All HEPAs (Second)
75-50-3	vapor	1	10000	1	1	1	1	1
75-52-5	vapor	1	10000	1	1	1	1	1
75-55-8	vapor	1	10000	1	1	1	1	1
75-61-6	vapor	1	1	1	1	1	1	1
75-63-8	vapor	1	1	1	1	1	1	1
75-65-0	vapor	1	10000	1	1	1	1	1
75-69-4	vapor	1	1	1	1	1	1	1
75-71-8	vapor	1	1	1	1	1	1	1
75-99-0	vapor	1	100	1	2	1	1	1
76-03-9	vapor	1	1	1	50	1	1	1
76-11-9	vapor	1	10	1	5	1	1	1
76-12-0	vapor	1	10	1	5	1	1	1
76-13-1	vapor	1	20	1	2	1	1	1
76-14-2	vapor	1	1	1	1	1	1	1
76-15-3	vapor	1	1	1	1	1	1	1
76-44-8	vapor	1	3.333333	1	10	1	1	1
78-83-1	vapor	1	10000	1	1	1	1	1
78-87-5	vapor	1	1000	1	1	1	1	1
78-92-2	vapor	1	10000	1	1	1	1	1
78-93-3	vapor	1	1000	1	1	1	1	1
79-00-5	vapor	1	10000	1	1	1	1	1
79-01-6	vapor	1	10000	1	1	1	1	1
79-09-4	vapor	1	10000	1	1	1	1	1
79-10-7	vapor	1	10000	1	1	1	1	1
79-20-9	vapor	1	10000	1	1	1	1	1
79-34-5	vapor	1	1	1	10	1	1	1
8001-35-2	particle-bound	200	3.333333	3.3	50	5	2000	100
82-68-8	vapor	1	3.333333	1	50	1	1	1
83-32-9	vapor	1	3.333333	1	50	1	1	1

CALCULATION SHEET

PROJECT: WTP
JOB NO.: 24590
CALC NO.: 24590-WTP-M4C-FRP-00005
SHEET REV: A
SHEET NO.: 19

BY: E. Berrios
DATE: 05/21/03

SUBJECT: Estimation of Non-SSFM Represented Organic Emission Rates Required to Support the Integrated Emissions Baseline Report

Pretreatment Facility Organic Constituents DFs per Unit Operation

CAS Registry Number	Phase	PT HEME	PT Thermal Oxidizer	PT Caustic Scrubber	PT Carbon Bed Adsorber	PT PJV Demister	All HEPAs (First)	All HEPAs (Second)
84-66-2	vapor	1	10000	1	5	1	1	1
84-74-2	particle-bound	200	10000	3.3	5	5	2000	100
85-01-8	vapor	1	3.333333	1	50	1	1	1
85-68-7	particle-bound	200	10000	3.3	5	5	2000	100
86-73-7	particle-bound	200	3.333333	3.3	50	5	2000	100
87-68-3	vapor	1	50	1	5	1	1	1
87-86-5	vapor	1	3.333333	1	50	1	1	1
88-06-2	vapor	1	3.333333	1	50	1	1	1
88-72-2	vapor	1	10000	1	2	1	1	1
88-75-5	vapor	1	3.333333	1	20	1	1	1
88-85-7	particle-bound	200	3.333333	3.3	50	5	2000	100
88-89-1	particle-bound	200	10000	3.3	5	5	2000	100
91-20-3	vapor	1	100	1	2	1	1	1
91-22-5	vapor	1	10000	1	2	1	1	1
91-58-7	vapor	1	3.333333	1	50	1	1	1
92-52-4	vapor	1	1000	1	5	1	1	1
92-93-3	particle-bound	200	3.333333	3.3	50	5	2000	100
93-72-1	particle-bound	200	3.333333	3.3	50	5	2000	100
93-76-5	particle-bound	200	3.333333	3.3	50	5	2000	100
94-75-7	vapor	1	3.333333	1	50	1	1	1
95-13-6	vapor	1	1000	1	2	1	1	1
95-47-6	vapor	1	10000	1	1	1	1	1
95-48-7	vapor	1	1000	1	2	1	1	1
95-49-8	vapor	1	10000	1	2	1	1	1
95-50-1	vapor	1	50	1	2	1	1	1
95-57-8	vapor	1	10000	1	2	1	1	1
95-95-4	vapor	1	3.333333	1	50	1	1	1
96-22-0	vapor	1	10000	1	1	1	1	1
96-69-5	particle-bound	200	3.333333	3.3	50	5	2000	100

CALCULATION SHEET

PROJECT: WTP
JOB NO.: 24590
CALC NO.: 24590-WTP-M4C-FRP-00005
SHEET REV: A
SHEET NO.: 20

BY: E. Berrios
DATE: 05/21/03

SUBJECT: Estimation of Non-SSFM Represented Organic Emission Rates Required to Support the Integrated Emissions Baseline Report

Pretreatment Facility Organic Constituents DFs per Unit Operation

CAS Registry Number	Phase	PT HEME	PT Thermal Oxidizer	PT Caustic Scrubber	PT Carbon Bed Adsorber	PT PJV Demister	All HEPAs (First)	All HEPAs (Second)
98-51-1	vapor	1	10000	1	2	1	1	1
98-82-8	vapor	1	10000	1	2	1	1	1
98-83-9	vapor	1	100	1	2	1	1	1
98-86-2	vapor	1	100	1	2	1	1	1
98-95-3	vapor	1	10000	1	2	1	1	1

LAW and HLW Facilities Organic Constituents DFs per Unit Operation

CAS Registry Number	Phase	HLW & LAW Melters	HLW & LAW Submerged Bed Scrubber	HLW & LAW WESP	HLW HEME	LAW Caustic Scrubber	All HEPAs (First)	All HEPAs (Second)	HLW & LAW Thermal Catalytic Oxidizer
100-00-5	vapor	1.1	1	1	1	1	1	1	20
100-21-0	vapor	1.1	1	1	1	1	1	1	20
100-25-4	particle-bound	1.1	40	11	90	1	2000	100	20
100-41-4	vapor	1.1	1	1	1	1	1	1	20
100-42-5	vapor	1.1	1	1	1	1	1	1	20
10061-01-5	vapor	1.1	1	1	1	1	1	1	20
10061-02-6	vapor	1.1	1	1	1	1	1	1	20
101-55-3	vapor	1.1	1	1	1	1	1	1	20
101-84-8	vapor	1.1	1	1	1	1	1	1	20
106-35-4	vapor	1.1	1	1	1	1	1	1	20
106-42-3	vapor	1.1	1	1	1	1	1	1	20
106-46-7	vapor	1.1	1	1	1	1	1	1	20
106-88-7	vapor	1.1	1	1	1	1	1	1	20
106-93-4	vapor	1.1	1	1	1	1	1	1	20
106-97-8	vapor	1.1	1	1	1	1	1	1	20
106-99-0	vapor	1.1	1	1	1	1	1	1	20

CALCULATION SHEET

PROJECT: WTP
JOB NO.: 24590
CALC NO.: 24590-WTP-M4C-FRP-00005
SHEET REV: A
SHEET NO.: 21

BY: E. Berrios
DATE: 05/21/03

SUBJECT: Estimation of Non-SSFM Represented Organic Emission Rates Required to Support the Integrated Emissions Baseline Report

LAW and HLW Facilities Organic Constituents DFs per Unit Operation

CAS Registry Number	Phase	HLW & LAW Melters	HLW & LAW Submerged Bed Scrubber	HLW & LAW WESP	HLW HEME	LAW Caustic Scrubber	All HEPAs (First)	All HEPAs (Second)	HLW & LAW Thermal Catalytic Oxidizer
107-02-8	vapor	1.1	1	1	1	1	1	1	20
107-05-1	vapor	1.1	1	1	1	1	1	1	20
107-06-2	vapor	1.1	1	1	1	1	1	1	20
107-12-0	vapor	1.1	1	1	1	1	1	1	20
107-13-1	vapor	1.1	1	1	1	1	1	1	20
107-18-6	vapor	1.1	1	1	1	1	1	1	20
107-31-3	vapor	1.1	1	1	1	1	1	1	20
107-66-4	particle-bound	1.1	40	11	90	1	2000	100	20
107-87-9	vapor	1.1	1	1	1	1	1	1	20
108-03-2	vapor	1.1	1	1	1	1	1	1	20
108-05-4	vapor	1.1	1	1	1	1	1	1	20
108-10-1	vapor	1.1	1	1	1	1	1	1	20
108-20-3	vapor	1.1	1	1	1	1	1	1	20
108-38-3	vapor	1.1	1	1	1	1	1	1	20
108-39-4	vapor	1.1	1	1	1	1	1	1	20
108-87-2	vapor	1.1	1	1	1	1	1	1	20
108-88-3	vapor	1.1	1	1	1	1	1	1	20
108-90-7	vapor	1.1	1	1	1	1	1	1	20
108-93-0	vapor	1.1	1	1	1	1	1	1	20
108-94-1	vapor	1.1	1	1	1	1	1	1	20
108-95-2	vapor	1.1	1	1	1	1	1	1	20
109-66-0	vapor	1.1	1	1	1	1	1	1	20
109-99-9	vapor	1.1	1	1	1	1	1	1	20
110-12-3	vapor	1.1	1	1	1	1	1	1	20
110-43-0	vapor	1.1	1	1	1	1	1	1	20
110-54-3	vapor	1.1	1	1	1	1	1	1	20
110-62-3	vapor	1.1	1	1	1	1	1	1	20
110-82-7	vapor	1.1	1	1	1	1	1	1	20

CALCULATION SHEET

PROJECT: WTP
JOB NO.: 24590
CALC NO.: 24590-WTP-M4C-FRP-00005
SHEET REV: A
SHEET NO.: 22

BY: E. Berrios
DATE: 05/21/03

SUBJECT: Estimation of Non-SSFM Represented Organic Emission Rates Required to Support the Integrated Emissions Baseline Report

LAW and HLW Facilities Organic Constituents DFs per Unit Operation

CAS Registry Number	Phase	HLW & LAW Melters	HLW & LAW Submerged Bed Scrubber	HLW & LAW WESP	HLW HEME	LAW Caustic Scrubber	All HEPAs (First)	All HEPAs (Second)	HLW & LAW Thermal Catalytic Oxidizer
110-83-8	vapor	1.1	1	1	1	1	1	1	20
110-86-1	vapor	1.1	1	1	1	1	1	1	20
111-65-9	vapor	1.1	1	1	1	1	1	1	20
111-76-2	vapor	1.1	1	1	1	1	1	1	20
111-84-2	vapor	1.1	1	1	1	1	1	1	20
117-81-7	particle-bound	1.1	40	11	90	1	2000	100	20
117-84-0	particle-bound	1.1	40	11	90	1	2000	100	20
118-74-1	vapor	1.1	1	1	1	1	1	1	20
120-12-7	vapor	1.1	1	1	1	1	1	1	20
120-82-1	vapor	1.1	1	1	1	1	1	1	20
120-83-2	vapor	1.1	1	1	1	1	1	1	20
121-44-8	vapor	1.1	1	1	1	1	1	1	20
121-69-7	vapor	1.1	1	1	1	1	1	1	20
122-39-4	vapor	1.1	1	1	1	1	1	1	20
123-19-3	vapor	1.1	1	1	1	1	1	1	20
123-38-6	vapor	1.1	1	1	1	1	1	1	20
123-51-3	vapor	1.1	1	1	1	1	1	1	20
123-86-4	vapor	1.1	1	1	1	1	1	1	20
123-91-1	vapor	1.1	1	1	1	1	1	1	20
126-73-8	vapor	1.1	1	1	1	1	1	1	20
126-98-7	vapor	1.1	1	1	1	1	1	1	20
127-18-4	vapor	1.1	1	1	1	1	1	1	20
127-19-5	vapor	1.1	1	1	1	1	1	1	20
128-37-0	vapor	1.1	1	1	1	1	1	1	20
129-00-0	particle-bound	1.1	40	11	90	1	2000	100	20
1321-64-8	particle-bound	1.1	40	11	90	1	2000	100	20
1321-65-9	vapor	1.1	1	1	1	1	1	1	20
132-64-9	vapor	1.1	1	1	1	1	1	1	20

CALCULATION SHEET

PROJECT: WTP
JOB NO.: 24590
CALC NO.: 24590-WTP-M4C-FRP-00005
SHEET REV: A
SHEET NO.: 23

BY: E. Berrios
DATE: 05/21/03

SUBJECT: Estimation of Non-SSFM Represented Organic Emission Rates Required to Support the Integrated Emissions Baseline Report

LAW and HLW Facilities Organic Constituents DFs per Unit Operation

CAS Registry Number	Phase	HLW & LAW Melters	HLW & LAW Submerged Bed Scrubber	HLW & LAW WESP	HLW HEME	LAW Caustic Scrubber	All HEPAs (First)	All HEPAs (Second)	HLW & LAW Thermal Catalytic Oxidizer
1335-87-1	particle-bound	1.1	40	11	90	1	2000	100	20
1335-88-2	particle-bound	1.1	40	11	90	1	2000	100	20
1336-36-3	particle-bound	1.1	40	11	90	1	2000	100	20
141-78-6	vapor	1.1	1	1	1	1	1	1	20
141-79-7	vapor	1.1	1	1	1	1	1	1	20
142-82-5	vapor	1.1	1	1	1	1	1	1	20
144-62-7	vapor	1.1	1	1	1	1	1	1	20
156-60-5	vapor	1.1	1	1	1	1	1	1	20
1582-09-8	particle-bound	1.1	40	11	90	1	2000	100	20
1634-04-4	vapor	1.1	1	1	1	1	1	1	20
1836-75-5	particle-bound	1.1	40	11	90	1	2000	100	20
189-55-9	particle-bound	1.1	40	11	90	1	2000	100	20
189-64-0	particle-bound	1.1	40	11	90	1	2000	100	20
191-24-2	particle-bound	1.1	40	11	90	1	2000	100	20
191-30-0	particle	1.1	40	11	90	1	2000	100	20
192-65-4	particle	1.1	40	11	90	1	2000	100	20
193-39-5	particle	1.1	40	11	90	1	2000	100	20
205-82-3	particle-bound	1.1	40	11	90	1	2000	100	20
205-99-2	particle-bound	1.1	40	11	90	1	2000	100	20
206-44-0	particle-bound	1.1	40	11	90	1	2000	100	20
207-08-9	particle-bound	1.1	40	11	90	1	2000	100	20
208-96-8	vapor	1.1	1	1	1	1	1	1	20
218-01-9	particle-bound	1.1	40	11	90	1	2000	100	20
2234-13-1	particle-bound	1.1	40	11	90	1	2000	100	20
224-42-0	particle-bound	1.1	40	11	90	1	2000	100	20
226-36-8	particle-bound	1.1	40	11	90	1	2000	100	20
2385-85-5	vapor	1.1	1	1	1	1	1	1	20
25551-13-7	vapor	1.1	1	1	1	1	1	1	20

CALCULATION SHEET

PROJECT: WTP
JOB NO.: 24590
CALC NO.: 24590-WTP-M4C-FRP-00005
SHEET REV: A
SHEET NO.: 24

BY: E. Berrios
DATE: 05/21/03

SUBJECT: Estimation of Non-SSFM Represented Organic Emission Rates Required to Support the Integrated Emissions Baseline Report

LAW and HLW Facilities Organic Constituents DFs per Unit Operation

CAS Registry Number	Phase	HLW & LAW Melters	HLW & LAW Submerged Bed Scrubber	HLW & LAW WESP	HLW HEME	LAW Caustic Scrubber	All HEPAs (First)	All HEPAs (Second)	HLW & LAW Thermal Catalytic Oxidizer
26140-60-3	particle-bound	1.1	40	11	90	1	2000	100	20
27154-33-2	vapor	1.1	1	1	1	1	1	1	20
287-92-3	vapor	1.1	1	1	1	1	1	1	20
309-00-2	particle-bound	1.1	40	11	90	1	2000	100	20
319-84-6	vapor	1.1	1	1	1	1	1	1	20
319-85-7	particle-bound	1.1	40	11	90	1	2000	100	20
319-86-8	particle-bound	1.1	40	11	90	1	2000	100	20
3697-24-3	particle-bound	1.1	40	11	90	1	2000	100	20
3825-26-1	particle-bound	1.1	40	11	90	1	2000	100	20
4170-30-3	vapor	1.1	1	1	1	1	1	1	20
465-73-6	vapor	1.1	1	1	1	1	1	1	20
50-00-0	vapor	1.1	1	1	1	1	1	1	20
50-29-3	particle-bound	1.1	40	11	90	1	2000	100	20
50-32-8	particle-bound	1.1	40	11	90	1	2000	100	20
53-70-3	particle	1.1	40	11	90	1	2000	100	20
540-59-0	vapor	1.1	1	1	1	1	1	1	20
540-84-1	vapor	1.1	1	1	1	1	1	1	20
541-73-1	vapor	1.1	1	1	1	1	1	1	20
56-23-5	vapor	1.1	1	1	1	1	1	1	20
563-80-4	vapor	1.1	1	1	1	1	1	1	20
56-49-5	particle-bound	1.1	40	11	90	1	2000	100	20
56-55-3	particle-bound	1.1	40	11	90	1	2000	100	20
57-14-7	vapor	1.1	1	1	1	1	1	1	20
58-89-9	particle-bound	1.1	40	11	90	1	2000	100	20
58-90-2	vapor	1.1	1	1	1	1	1	1	20
591-78-6	vapor	1.1	1	1	1	1	1	1	20
59-50-7	particle-bound	1.1	40	11	90	1	2000	100	20
59-89-2	vapor	1.1	1	1	1	1	1	1	20

CALCULATION SHEET

PROJECT: WTP
JOB NO.: 24590
CALC NO.: 24590-WTP-M4C-FRP-00005
SHEET REV: A
SHEET NO.: 25

BY: E. Berrios
DATE: 05/21/03

SUBJECT: Estimation of Non-SSFM Represented Organic Emission Rates Required to Support the Integrated Emissions Baseline Report

LAW and HLW Facilities Organic Constituents DFs per Unit Operation

CAS Registry Number	Phase	HLW & LAW Melters	HLW & LAW Submerged Bed Scrubber	HLW & LAW WESP	HLW HEME	LAW Caustic Scrubber	All HEPAs (First)	All HEPAs (Second)	HLW & LAW Thermal Catalytic Oxidizer
602-87-9	particle-bound	1.1	40	11	90	1	2000	100	20
60-29-7	vapor	1.1	1	1	1	1	1	1	20
603-34-9	vapor	1.1	1	1	1	1	1	1	20
60-34-4	vapor	1.1	1	1	1	1	1	1	20
60-35-5	vapor	1.1	1	1	1	1	1	1	20
60-57-1	particle-bound	1.1	40	11	90	1	2000	100	20
621-64-7	vapor	1.1	1	1	1	1	1	1	20
624-83-9	vapor	1.1	1	1	1	1	1	1	20
627-13-4	vapor	1.1	1	1	1	1	1	1	20
62-75-9	vapor	1.1	1	1	1	1	1	1	20
630-20-6	vapor	1.1	1	1	1	1	1	1	20
64-17-5	vapor	1.1	1	1	1	1	1	1	20
64-18-6	vapor	1.1	1	1	1	1	1	1	20
64-19-7	vapor	1.1	1	1	1	1	1	1	20
67-56-1	vapor	1.1	1	1	1	1	1	1	20
67-63-0	vapor	1.1	1	1	1	1	1	1	20
67-64-1	vapor	1.1	1	1	1	1	1	1	20
67-66-3	vapor	1.1	1	1	1	1	1	1	20
67-72-1	vapor	1.1	1	1	1	1	1	1	20
684-16-2	vapor	1.1	1	1	1	1	1	1	20
71-23-8	vapor	1.1	1	1	1	1	1	1	20
71-36-3	vapor	1.1	1	1	1	1	1	1	20
71-43-2	vapor	1.1	1	1	1	1	1	1	20
71-55-6	vapor	1.1	1	1	1	1	1	1	20
72-20-8	particle-bound	1.1	40	11	90	1	2000	100	20
72-43-5	particle-bound	1.1	40	11	90	1	2000	100	20
72-54-8	particle-bound	1.1	40	11	90	1	2000	100	20
72-55-9	particle-bound	1.1	40	11	90	1	2000	100	20

CALCULATION SHEET

PROJECT: WTP
JOB NO.: 24590
CALC NO.: 24590-WTP-M4C-FRP-00005
SHEET REV: A
SHEET NO.: 26

BY: E. Berrios
DATE: 05/21/03

SUBJECT: Estimation of Non-SSFM Represented Organic Emission Rates Required to Support the Integrated Emissions Baseline Report

LAW and HLW Facilities Organic Constituents DFs per Unit Operation

CAS Registry Number	Phase	HLW & LAW Melters	HLW & LAW Submerged Bed Scrubber	HLW & LAW WESP	HLW HEME	LAW Caustic Scrubber	All HEPAs (First)	All HEPAs (Second)	HLW & LAW Thermal Catalytic Oxidizer
74-83-9	vapor	1.1	1	1	1	1	1	1	20
74-87-3	vapor	1.1	1	1	1	1	1	1	20
74-97-5	vapor	1.1	1	1	1	1	1	1	20
74-99-7	vapor	1.1	1	1	1	1	1	1	20
75-00-3	vapor	1.1	1	1	1	1	1	1	20
75-01-4	vapor	1.1	1	1	1	1	1	1	20
75-05-8	vapor	1.1	1	1	1	1	1	1	20
75-07-0	vapor	1.1	1	1	1	1	1	1	20
75-09-2	vapor	1.1	1	1	1	1	1	1	20
75-12-7	vapor	1.1	1	1	1	1	1	1	20
75-15-0	vapor	1.1	1	1	1	1	1	1	20
75-21-8	vapor	1.1	1	1	1	1	1	1	20
75-27-4	vapor	1.1	1	1	1	1	1	1	20
75-34-3	vapor	1.1	1	1	1	1	1	1	20
75-35-4	vapor	1.1	1	1	1	1	1	1	20
75-43-4	vapor	1.1	1	1	1	1	1	1	20
75-45-6	vapor	1.1	1	1	1	1	1	1	20
75-50-3	vapor	1.1	1	1	1	1	1	1	20
75-52-5	vapor	1.1	1	1	1	1	1	1	20
75-55-8	vapor	1.1	1	1	1	1	1	1	20
75-61-6	vapor	1.1	1	1	1	1	1	1	20
75-63-8	vapor	1.1	1	1	1	1	1	1	20
75-65-0	vapor	1.1	1	1	1	1	1	1	20
75-69-4	vapor	1.1	1	1	1	1	1	1	20
75-71-8	vapor	1.1	1	1	1	1	1	1	20
75-99-0	vapor	1.1	1	1	1	1	1	1	20
76-03-9	vapor	1.1	1	1	1	1	1	1	20
76-11-9	vapor	1.1	1	1	1	1	1	1	20

CALCULATION SHEET

PROJECT: WTP
JOB NO.: 24590
CALC NO.: 24590-WTP-M4C-FRP-00005
SHEET REV: A
SHEET NO.: 27

BY: E. Berrios
DATE: 05/21/03

SUBJECT: Estimation of Non-SSFM Represented Organic Emission Rates Required to Support the Integrated Emissions Baseline Report

LAW and HLW Facilities Organic Constituents DFs per Unit Operation

CAS Registry Number	Phase	HLW & LAW Melters	HLW & LAW Submerged Bed Scrubber	HLW & LAW WESP	HLW HEME	LAW Caustic Scrubber	All HEPAs (First)	All HEPAs (Second)	HLW & LAW Thermal Catalytic Oxidizer
76-12-0	vapor	1.1	1	1	1	1	1	1	20
76-13-1	vapor	1.1	1	1	1	1	1	1	20
76-14-2	vapor	1.1	1	1	1	1	1	1	20
76-15-3	vapor	1.1	1	1	1	1	1	1	20
76-44-8	vapor	1.1	1	1	1	1	1	1	20
78-83-1	vapor	1.1	1	1	1	1	1	1	20
78-87-5	vapor	1.1	1	1	1	1	1	1	20
78-92-2	vapor	1.1	1	1	1	1	1	1	20
78-93-3	vapor	1.1	1	1	1	1	1	1	20
79-00-5	vapor	1.1	1	1	1	1	1	1	20
79-01-6	vapor	1.1	1	1	1	1	1	1	20
79-09-4	vapor	1.1	1	1	1	1	1	1	20
79-10-7	vapor	1.1	1	1	1	1	1	1	20
79-20-9	vapor	1.1	1	1	1	1	1	1	20
79-34-5	vapor	1.1	1	1	1	1	1	1	20
8001-35-2	particle-bound	1.1	40	11	90	1	2000	100	20
82-68-8	vapor	1.1	1	1	1	1	1	1	20
83-32-9	vapor	1.1	1	1	1	1	1	1	20
84-66-2	vapor	1.1	1	1	1	1	1	1	20
84-74-2	particle-bound	1.1	40	11	90	1	2000	100	20
85-01-8	vapor	1.1	1	1	1	1	1	1	20
85-68-7	particle-bound	1.1	40	11	90	1	2000	100	20
86-73-7	particle-bound	1.1	40	11	90	1	2000	100	20
87-68-3	vapor	1.1	1	1	1	1	1	1	20
87-86-5	vapor	1.1	1	1	1	1	1	1	20
88-06-2	vapor	1.1	1	1	1	1	1	1	20
88-72-2	vapor	1.1	1	1	1	1	1	1	20
88-75-5	vapor	1.1	1	1	1	1	1	1	20

CALCULATION SHEET

PROJECT: WTP
JOB NO.: 24590
CALC NO.: 24590-WTP-M4C-FRP-00005
SHEET REV: A
SHEET NO.: 28

BY: E. Berrios
DATE: 05/21/03

SUBJECT: Estimation of Non-SSFM Represented Organic Emission Rates Required to Support the Integrated Emissions Baseline Report

LAW and HLW Facilities Organic Constituents DFs per Unit Operation

CAS Registry Number	Phase	HLW & LAW Melters	HLW & LAW Submerged Bed Scrubber	HLW & LAW WESP	HLW HEME	LAW Caustic Scrubber	All HEPAs (First)	All HEPAs (Second)	HLW & LAW Thermal Catalytic Oxidizer
88-85-7	particle-bound	1.1	40	11	90	1	2000	100	20
88-89-1	particle-bound	1.1	40	11	90	1	2000	100	20
91-20-3	vapor	1.1	1	1	1	1	1	1	20
91-22-5	vapor	1.1	1	1	1	1	1	1	20
91-58-7	vapor	1.1	1	1	1	1	1	1	20
92-52-4	vapor	1.1	1	1	1	1	1	1	20
92-93-3	particle-bound	1.1	40	11	90	1	2000	100	20
93-72-1	particle-bound	1.1	40	11	90	1	2000	100	20
93-76-5	particle-bound	1.1	40	11	90	1	2000	100	20
94-75-7	vapor	1.1	1	1	1	1	1	1	20
95-13-6	vapor	1.1	1	1	1	1	1	1	20
95-47-6	vapor	1.1	1	1	1	1	1	1	20
95-48-7	vapor	1.1	1	1	1	1	1	1	20
95-49-8	vapor	1.1	1	1	1	1	1	1	20
95-50-1	vapor	1.1	1	1	1	1	1	1	20
95-57-8	vapor	1.1	1	1	1	1	1	1	20
95-95-4	vapor	1.1	1	1	1	1	1	1	20
96-22-0	vapor	1.1	1	1	1	1	1	1	20
96-69-5	particle-bound	1.1	40	11	90	1	2000	100	20
98-51-1	vapor	1.1	1	1	1	1	1	1	20
98-82-8	vapor	1.1	1	1	1	1	1	1	20
98-83-9	vapor	1.1	1	1	1	1	1	1	20
98-86-2	vapor	1.1	1	1	1	1	1	1	20
98-95-3	vapor	1.1	1	1	1	1	1	1	20

- The results from the SSFM used to estimate the organic releases in this calculation were based on the model run request titled *Emissions Vitrification Maximum Case Run with Updated Organic Parameters* (24590-WTP-MRQ-PO-03-054). The stream reports used in this calculation are:
  - PJV32 – Unabated HLW RFD/PJM
  - FRP14 – WTP Waste Feed
  - PVP01 – Unabated Pretreatment Vessel Vent
  - PJV04 – Unabated Pretreatment RFD/PJM
  - LMP06 – Unabated LAW Melter Offgas
  - LVP01 – Unabated LAW Vessel Ventilation Header (which is the summation of streams LFP06, RLD32, RLD33, and RLD34)
  - HMP06 – Unabated HLW Melter Offgas
  - HOP10 – Unabated HLW Vessel Ventilation Header

  These stream reports can be found in Appendix A of this calculation.

3 Background

There are a total of 250 organic constituents (excluding Products of Incomplete Combustion) that are required to be tracked through the WTP for permitting purposes. Emissions profiles for the WTP are generated by using the Steady State Flowsheet Model. In order to simplify the flowsheet, not all organic constituents are tracked. The constituents were segregated into groups based on similar physical and chemical properties. Representatives from each group were selected and are tracked in the flowsheet. Only 51 organic constituents are tracked in the flowsheet. Based on the behavior and results of these representative constituents, the expected emissions rates for the non-tracked constituents can be calculated. This calculation estimates these releases.

4 Applicable Codes and Standards

NA

5 Methodology

The following methodology was used in this calculation:

- Organic feed rates to the WTP were calculated by multiplying the constituent's feed concentration in mg/l by the volumetric flowrate of the feed stream in liters per minute. This mass flowrate was then converted to grams per second.
- The results from the representative compounds were obtained from the Steady State Flowsheet Model for each desired stream (PVP01 is used as an example). The performance factor (PF) for the representative compounds was calculated per stream relative to the feed stream, FRP14. This was done by obtaining the representative compounds mass feed rate from stream report # FRP14 and its mass flowrate at the stream being evaluated. The PF was calculated by dividing the constituent's mass feed rate by the specified stream's constituent mass flowrate.

$$PF = \frac{\text{mass rate at point of interest [representative compound]}}{\text{mass rate at waste feed [representative compound]}}$$

- Once the PF was calculated, it was applied to the feed rate for the non-represented compound in order to obtain the mass flowrate of the constituent at that stream. If more than one compound was used to represent a group, the average PF between the compounds was used to calculate the non-represented compound rate.

- The rate of the 14 coplanar PCBs is 1% of the total PCB (as represented by CAS# 1336-36-3). Thus, to calculate the feed rate for each coplanar PCB, the rate of the total PCB was multiplied by 0.01 and divided by 14.
- For the constituents in the Pretreatment Vessel Vent the stack calculation is easily determined by applying the DFs per unit operation. For example, gas constituents are only removed in the Thermal Catalytic Oxidizer (TCO) and the Carbon Beds while the particulate constituents have removal through the entire system (i.e. caustic scrubber, high efficiency mist eliminator (HEME), high efficiency particulate air (HEPA) filters, TCO, and carbon beds). Thus the feed rate entering the Pretreatment Vessel Vent is divided by all the applicable DFs for each constituent. The final number obtained is the stack emissions estimate. This same process also applies to the Pretreatment PJM/RFD system and the HLW PJM/RFD system. For example, if a constituent had a value of 1.0E-03 g/sec at the entrance to the pretreatment caustic scrubber (stream PVP01) and DFs of 1 for the caustic scrubber, 1 for the HEME, 1 for the HEPA filters, 1000 for the TCO and 5 for the carbon beds, then the stack flowrate would be:
  1.0E-03 / (1*1*1*1000*5) = 2.0E-07 g/sec.
- In the HLW and LAW vitrification facilities, there is generation of offgas in the melter. The offgas goes through the submerged bed scrubber (SBS) and the wet electrostatic precipitator (WESP) before it is joined with the vessel ventilation stream. Thus for the vitrification plants, the estimation of organic constituents generation from the melter is calculated as was done in the Pretreatment vessel vent and PJM/RFD areas. This process was also applied to obtain the overall vessel vent stream composition. When the offgas meets the vessel vent stream, these two streams were added together to obtain the overall constituent mass flowrate at that point. From then on, the specific DFs were used for all unit operations found from the mixing point up to the stack.

6 Assumptions

NA

7 Calculations

Calculations were performed using the Microsoft Excel® 97 spreadsheet on a Compaq PC workstation. The calculation for two groupings of organic constituents having similar chemical and physical properties is shown for all the streams. Of the groups selected, one group has one representative compound while the other group has three representative compounds. The groups selected are:
Group 4: represented by Formamide (75-12-7)
Group 8: represented by Phenol (108-95-2), Diethyl Phthalate (84-66-2), and 2-sec-Butyl—4,6-dinitrophenol (88-85-7)
The entire lists of constituents for these two groups are as follows:
Group 4
- Formamide (75-12-7)
- Dibenz[a,j]acridine (224-42-0)
- Dibenz[a,h]acridine (226-36-8)

Group 8
- Phenol (108-95-2)
- Diethyl Phthalate (84-66-2)
- 2-sec-Butyl—4,6-dinitrophenol (88-85-7)
- Formaldehyde (50-00-0)
- Propionic Acid (79-09-4)

- 2-Propenoic Acid (79-10-7)

Also the calculation for Coplanar PCBs is included for all the streams. The coplanar PCBs are represented by:
2,3',4,4',5-Pentachlorobiphenyl (PBC 118) (31508-00-6)
3,3',4,4'-Tetrachlorobiphenyl (TCB) (32598-13-3)
2,3,3',4,4'-Pentachlorobiphenyl (PCB 105) (32598-14-4)
3,3',4,4',5,5'-Hexachlorobiphenyl (32774-16-6)
2,2',3,4,4',5,5'-Heptachlorobiphenyl (35065-29-3)
2,2',3,3',4,4',5-Heptachlorobiphenyl (35065-30-6)
2,3,3',4,4',5-Hexachlorobiphenyl (PCB 157) (38380-08-4)
2,3,3',4,4',5,5'-Heptachlorobiphenyl (39635-31-9)
2,3',4,4',5,5'-Hexachlorobiphenyl (52663-72-6)
3,3',4,4',5-Pentachlorobiphenyl (57465-28-8)
2',3,4,4',5-Pentachlorobiphenyl (65510-44-3)
2,3,3',4,4',5'-Hexachlorobiphenyl (69782-90-7)
3,4,4',5-Tetrachlorobiphenyl (70362-50-4)
2,3,4,4',5-Pentachlorobiphenyl (74472-37-0)

7.1 Feed Rate

FRP14 is the HLW waste feed stream while FRP01 is the LAW waste feed. Due to the characteristics of the emissions feed vector, there is enough LAW feed entering with the HLW feed in FRP14 to achieve the 50 tonnes/day of LAW glass, thus the stream FRP01 is zero. Therefore all the numbers for the feed stream are based on FRP14.

For all the calculations in this section refer to Table B-1 in Appendix B. From Appendix A, stream FRP14, the total volumetric flowrate for this stream is: 0.871 ft^3/min (cell D1)
Converting to liters per minute: 0.871 ft^3/min * 28.317 l/ft^3 = 24.66 l/min (cell D2)

Group 4 feed rates in grams per second:
Formamide (75-12-7) feed concentration: 84.8 mg/l (cell C171)
84.8 mg/l (cell C171) * 24.66 l/min * 1 g / 1000 mg * 1 min / 60 sec = 3.49E-02 g/sec (cell H171)
The other 2 constituents in this group have the same feed concentration thus the feed rate is the same.

Group 8 feed rates in grams per second:
Phenol (108-95-2) feed concentration: 84.8 mg/l (cell C42)
84.8 mg/l (cell C42) * 24.66 l/min * 1 g / 1000 mg * 1 min / 60 sec = 3.49E-02 g/sec (cell H42)
Constituents Diethyl Phthalate (84-66-2), 2-sec-Butyl—4,6-dinitrophenol (88-85-7), Propionic Acid (79-09-4), and 2-Propenoic Acid (79-10-7) have the same feed concentration thus the feed rate is the same. Formaldehyde's (50-00-0) feed concentration is different.
Formaldehyde feed concentration (50-00-0): 18.7 mg/l (cell C117)
18.7 mg/l (cell C117) * 24.66 l/min * 1 g / 1000 mg * 1 min / 60 sec = 7.67E-03 g/sec (cell H117)

Coplanar PCBs feed rate:
1336-36-3 feed concentration: 29.4 mg/l (cell C80)
29.4 mg/l (cell C80) * 24.66 l/min * 1 g / 1000 mg * 1 min / 60 sec = 1.21E-02 g/sec (cell H80)
Feed rate for the 14 coplanar PCBs is:
1.21E-02 (cell H80) * 0.01/14 = 8.76E-06 g/sec (cells L8 through L21)

7.2 Pretreatment Vessel Vent Analysis

To determine the stack releases from the Pretreatment Vessel Vent System (PVV), first the mass rates of all the constituents are calculated in stream PVP01 (the unabated Pretreatment Vessel Vent stream). Then the corresponding DFs for each constituent within the system are applied to these values to obtain the final stack releases (stream PVP12).

7.2.1 PVP01 Stream

This streams depicts the unabated Pretreatment Vessel Ventilation. For all the calculations in this section refer to Table B-2. First the feed rate is obtained followed by the mass rate of the representative constituent at the stream specified. The performance factor for this constituent is calculated and applied to the non-represented compounds to obtain their mass rate.

Group 4
Formamide (75-12-7) feed rate: 3.49E-02 g/sec (cell C169)
Formamide (75-12-7) rate at PVP01 from the PVP01 stream report in Appendix A: 1.27E-06 g/sec (cell H169)
Performance factor for Formamide: 1.27E-06/3.49E-02 = 3.64E-05 (cell I169, also copied to cell N8)

Dibenz[a,j]acridine (224-42-0) feed rate: 3.49E-02 g/sec (cell C100)
Mass rate at PVP01: 3.49E-02 (cell C100) * 3.64E-05 (cell N8) = 1.27E-06 g/sec (cell K100)
Dibenz[a,h]acridine (226-36-8) feed rate: 3.49E-02 g/sec (cell C101)
Mass rate at PVP01: 3.49E-02 (cell C101) * 3.64E-05 (cell N8) = 1.27E-06 g/sec (cell K101)

Group 8
Phenol (108-95-2) feed rate: 3.49E-02 g/sec (cell C40)
Phenol (108-95-2) rate at PVP01 from the PVP01 stream report in Appendix A: 2.41E-04 g/sec (cell H40)
Performance factor for Phenol: 2.41E-04/3.49E-02 = 6.92E-03 (cell I40)

Diethyl Phthalate (84-66-2) feed rate: 3.49E-02 g/sec (cell C206)
Diethyl Phthalate (84-66-2) rate at PVP01 from the PVP01 stream report in Appendix A: 3.97E-04 g/sec (cell H206)
Performance factor for Diethyl Phthalate: 3.97E-04/3.49E-02 = 1.14E-02 (cell I206)

2-sec-Butyl—4,6-dinitrophenol (88-85-7) feed rate: 3.49E-02 g/sec (cell C216)
2-sec-Butyl—4,6-dinitrophenol (88-85-7) rate at PVP01 from the PVP01 stream report in Appendix A: 4.08E-04 g/sec (cell H216)
Performance factor for 2-sec-Butyl—4,6-dinitrophenol: 4.08E-04/3.49E-02 = 1.17E-02 (cell I216)

Since this group is represented by the above 3 constituents, an average performance factor is then calculated and applied to the other constituents. Average performance factor is:
(6.92E-03 (cell I40) + 1.14E-02 (cell I206) + 1.17E-02 (cell I216))/3 = 1.00E-02 (cell N12)

Formaldehyde (50-00-0) feed rate: 7.67E-03 g/sec (cell C115)
Mass rate at PVP01: 7.67E-03 (cell C115) * 1.00E-02 (cell N12) = 7.67E-05 g/sec (cell K115)

Propionic Acid (79-09-4) feed rate: 3.49E-02 g/sec (cell C199)
Mass rate at PVP01: 3.49E-02 (cell C199) * 1.00E-02 (cell N12) = 3.49E-04 g/sec (cell K199)

2-Propenoic Acid (79-10-7) feed rate: 3.49E-02 g/sec (cell C200)
Mass rate at PVP01: 3.49E-02 (cell C200) * 1.00E-02 (cell N12) = 3.49E-04 g/sec (cell K200)

Coplanar PCBs
1336-36-3 feed rate at PVP01 from the PVP01 stream report in Appendix A: 5.85E-02 g/sec (cell H78)
Mass rate for the 14 coplanar PCBs in PVP01 is:
5.85E-02 (cell H78) * 0.01/14 = 4.18E-05 g/sec (cells S7 through S20)
Thus the corrected mass rate for 1336-36-3 in PVP01 is:
5.85E-02 g/sec * 0.99 = 5.79E-02 g/sec

7.2.2 PVP12 Stream

For all the calculations for this stream refer to Table B-3 of Appendix B. Input to this spreadsheet is the results from PVP01 stream calculations. These numbers are imported to Column C from cells C4 through C239. Also all the DFs are imported from Section 2 of this calculation. The corresponding DFs for this stream are related to the following unit operations: caustic scrubber, HEME, HEPA filters, TCO, and carbon beds. The calculations for Group 4 and Coplanar PCBs are the only ones shown below. The remaining groups are calculated in the same manner.

Group 4
Formamide (75-12-7) mass rate at PVP01: 1.27E-06 g/sec (cell C169)
Formamide (75-12-7) DFs throughout the PVV system:
- Caustic Scrubber: 1 (cell D169)
- HEME: 1 (cell E169)
- HEPA 1: 1 (cell F169)
- HEPA 2: 1 (cell G169)
- TCO: 10,000 (cell H169)
- Carbon Bed: 1 (cell I169)

Formamide PVP12 stack mass rate: 1.27E-06 / (1*1*1*1*10,000*1) = 1.27E-10 g/sec (cell J169)

Dibenz[a,j]acridine (224-42-0) mass rate at PVP01: 1.27E-06 g/sec (cell C100)
Dibenz[a,j]acridine (224-42-0) DFs throughout the PVV system:
- Caustic Scrubber: 3.3 (cell D100)
- HEME: 200 (cell E100)
- HEPA 1: 2,000 (cell F100)
- HEPA 2: 100 (cell G100)
- TCO: 3.3333333 (cell H100)
- Carbon Bed: 50 (cell I100)

Dibenz[a,j]acridine PVP12 stack mass rate: 1.27E-06 / (3.3*200*2,000*100*3.3333333*50) = 5.78E-17 g/sec (cell J100)

Dibenz[a,h]acridine (226-36-8) mass rate at PVP01: 1.27E-06 g/sec (cell C101)
Dibenz[a,h]acridine (226-36-8) DFs throughout the PVV system:
- Caustic Scrubber: 3.3 (cell D101)
- HEME: 200 (cell E101)
- HEPA 1: 2,000 (cell F101)
- HEPA 2: 100 (cell G101)
- TCO: 3.3333333 (cell H101)
- Carbon Bed: 50 (cell I101)

Dibenz[a,h]acridine PVP12 stack mass rate: 1.27E-06 / (3.3*200*2,000*100*3.3333333*50) = 5.78E-17 g/sec (cell J101)

Coplanar PCBs

1336-36-3 corrected mass rate at PVP01: 5.79E-02 (cell C78)
1336-36-3 DFs throughout the PVV system:

Caustic Scrubber: 3.3 (cell D78)
HEME: 200 (cell E78)
HEPA 1: 2,000 (cell F78)
HEPA 2: 100 (cell G78)
TCO: 3.3333333 (cell H78)
Carbon Bed: 50 (cell I78)

1336-36-3 PVP12 stack mass rate: 5.79E-02 / (3.3*200*2,000*100*3.3333333*50) = 2.63E-12 g/sec (cell J78)
Mass rate for the 14 coplanar PCBs in PVP12 is:
2.63E-12 (cell J78) * 0.01/14/0.99 = 1.90E-15 g/sec (cells N6 through N19)

7.3 Pretreatment PJM/RFD Analysis

To determine the stack releases from the Pretreatment PJM/RFD Ventilation System (PJV), first the mass rates of all the constituents are calculated in stream PJV04 (the unabated Pretreatment PJM/RFD Vent stream). Then the corresponding DFs for each constituent within the system are applied to these values to obtain the final stack releases (stream PJV11).

7.3.1 PJV04 Stream

This streams depicts the unabated Pretreatment RFD/PJM Ventilation. For all the calculations in this section refer to Table B-4. First the feed rate is obtained followed by the mass rate of the representative constituent at the stream specified. The performance factor for this constituent is calculated and applied to the non-represented compounds to obtain their mass rate.

Group 4

Formamide (75-12-7) feed rate: 3.49E-02 g/sec (cell C169)
Formamide (75-12-7) rate at PJV04 from the PJV04 stream report in Appendix A: 2.89E-06 g/sec (cell H169)
Performance factor for Formamide: 2.89E-06/3.49E-02 = 8.29E-05 (cell I169, also copied to cell N8)

Dibenz[a,j]acridine (224-42-0) feed rate: 3.49E-02 g/sec (cell C100)
Mass rate at PJV04: 3.49E-02 (cell C100) * 8.29E-05 (cell N8) = 2.89E-06 g/sec (cell K100)
Dibenz[a,h]acridine (226-36-8) feed rate: 3.49E-02 g/sec (cell C101)
Mass rate at PJV04: 3.49E-02 (cell C101) * 8.29E-05 (cell N8) = 2.89E-06 g/sec (cell K101)

Group 8

Phenol (108-95-2) feed rate: 3.49E-02 g/sec (cell C40)
Phenol (108-95-2) rate at PJV04 from the PJV04 stream report in Appendix A: 2.21E-06 g/sec (cell H40)
Performance factor for Phenol: 2.21E-06/3.49E-02 = 6.34E-05 (cell I40)

Diethyl Phthalate (84-66-2) feed rate: 3.49E-02 g/sec (cell C206)
Diethyl Phthalate (84-66-2) rate at PJV04 from the PJV04 stream report in Appendix A: 1.92E-06 g/sec (cell H206)
Performance factor for Diethyl Phthalate: 1.92E-06/3.49E-02 = 5.51E-05 (cell I206)

2-sec-Butyl—4,6-dinitrophenol (88-85-7) feed rate: 3.49E-02 g/sec (cell C216)
2-sec-Butyl—4,6-dinitrophenol (88-85-7) rate at PJV04 from the PJV04 stream report in Appendix A: 3.20E-06 g/sec (cell H216)
Performance factor for 2-sec-Butyl—4,6-dinitrophenol: 3.20E-06/3.49E-02 = 9.19E-05 (cell I216)

Since this group is represented by the above 3 constituents, an average performance factor is then calculated and applied to the other constituents. Average performance factor is:
(6.34E-05 (cell I40) + 5.51E-05 (cell I206) + 9.19E-05 (cell I216))/3 = 7.01E-05 (cell N12)

Formaldehyde (50-00-0) feed rate: 7.67E-03 g/sec (cell C115)
Mass rate at PJV04: 7.67E-03 (cell C115) * 7.01E-05 (cell N12) = 5.38E-07 g/sec (cell K115)

Propionic Acid (79-09-4) feed rate: 3.49E-02 g/sec (cell C199)
Mass rate at PJV04: 3.49E-02 (cell C199) * 7.01E-05 (cell N12) = 2.44E-06 g/sec (cell K199)

2-Propenoic Acid (79-10-7) feed rate: 3.49E-02 g/sec (cell C200)
Mass rate at PJV04: 3.49E-02 (cell C200) * 7.01E-05 (cell N12) = 2.44E-06 g/sec (cell K200)

Coplanar PCBs
1336-36-3 feed rate at PJV04 from the PJV04 stream report in Appendix A: 1.34E-06 g/sec (cell H78)
Mass rate for the 14 coplanar PCBs in PJV04 is:
1.34E-06 (cell H78) * 0.01/14 = 9.56E-10 g/sec (cells S7 through S20)
This means that the corrected mass rate for 1336-36-3 in PJV04 is:
1.34E-06 g/sec * 0.99 = 1.32E-06 g/sec

7.3.2 PJV11 Stream

For all the calculations for this stream refer to Table B-5 of Appendix B. Input to this spreadsheet is the results from PJV04 stream calculations. These numbers are imported to Column C from cells K4 through K239. Also all the DFs are imported from Section 2 of this calculation. The corresponding DFs for this stream are related to the following unit operations: demister and HEPA filters. The calculations for Group 4 and Coplanar PCBs are the only ones shown below. The remaining groups are calculated in the same manner.

Group 4
Formamide (75-12-7) mass rate at PJV04: 2.89E-06 g/sec (cell C169)
Formamide (75-12-7) DFs throughout the PJV system:
- Demister: 1 (cell D169)
- HEPA 1: 1 (cell E169)
- HEPA 2: 1 (cell F169)

Formamide PJV11 stack mass rate: 2.89E-06 / (1*1*1) = 2.89E-06 g/sec (cell G169)

Dibenz[a,j]acridine (224-42-0) mass rate at PJV04: 2.89E-06 g/sec (cell C100)
Dibenz[a,j]acridine (224-42-0) DFs throughout the PJV system:
- Demister: 5 (cell D100)
- HEPA 1: 2,000 (cell E100)
- HEPA 2: 100 (cell F100)

Dibenz[a,j]acridine PJV11 stack mass rate: 2.89E-06 / (5*2,000*100) = 2.89E-12 g/sec (cell G100)

Dibenz[a,h]acridine (226-36-8) feed rate mass rate at PJV04: 2.89E-06 g/sec (cell C101)

Dibenz[a,h]acridine (226-36-8) DFs throughout the PJV system:

Demister: 5 (cell D101)
HEPA 1: 2,000 (cell E101)
HEPA 2: 100 (cell F101)

Dibenz[a,h]acridine PJV11 stack mass rate: 2.89E-06 / (5*2,000*100) = 2.89E-12 g/sec (cell G101)

Coplanar PCBs

1336-36-3 corrected mass rate at PJV04: 1.32E-06 g/sec (cell C78)
1336-36-3 DFs throughout the PJV system:

Demister: 5 (cell D78)
HEPA 1: 2,000 (cell E78)
HEPA 2: 100 (cell F78)

1336-36-3 PJV11 stack mass rate: 1.32E-06 / (5*2,000*100) = 1.32E-12 g/sec (cell G78)
Mass rate for the 14 coplanar PCBs in PJV11 is:
1.32E-12 (cell G78) * 0.01/14/0.99 = 9.56E-16 g/sec (cells K6 through K19)

7.4 LAW Vitrification Analysis

To determine the stack releases from the LAW Melter Offgas System (LVP), first the mass rates of all the constituents are calculated in stream LMP06 (the unabated LAW Melter Offgas stream). From these values, the DFs that correspond to the SBS and WESP are applied to each constituent. These results are representative of LOP08. At this point the LAW Vessel Ventilation header joins the main offgas system. At this point also the mass rates of all the constituents are calculated in stream LVP01 (the unabated LAW Vessel Ventilation Header). The values from these two streams, LOP08 and LVP01, are then added together to represent stream LVP03 (combined offgas stream). From this point on, the corresponding DFs for each constituent within the system are applied to these values to obtain the final stack releases (stream LVP26). See sketch below for a simplified depiction of the process.

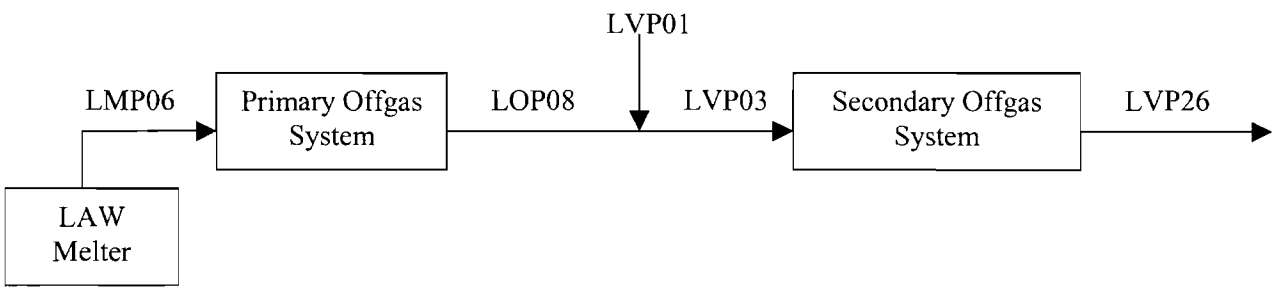

7.4.1 LMP06 Stream

This streams depicts the unabated LAW Melter Offgas. For all the calculations in this section refer to Table B-6. First the feed rate is obtained followed by the mass rate of the representative constituent at the stream specified. The performance factor for this constituent is calculated and applied to the non-represented compounds to obtain their mass rate.

Group 4

Formamide (75-12-7) feed rate: 3.49E-02 g/sec (cell C169)

Formamide (75-12-7) rate at LMP06 from the LMP06 stream report in Appendix A: 2.47E-02 g/sec (cell H169)
Performance factor for Formamide: 2.47E-02/3.49E-02 = 7.08E-01 (cell I169, also copied to cell N8)

Dibenz[a,j]acridine (224-42-0) feed rate: 3.49E-02 g/sec (cell C100)
Mass rate at LMP06: 3.49E-02 (cell C100) * 7.08E-01 (cell N8) = 2.47E-02 g/sec (cell K100)
Dibenz[a,h]acridine (226-36-8) feed rate: 3.49E-02 g/sec (cell C101)
Mass rate at LMP06: 3.49E-02 (cell C101) * 7.08E-01 (cell N8) = 2.47E-02 g/sec (cell K101)

Group 8
Phenol (108-95-2) feed rate: 3.49E-02 g/sec (cell C40)
Phenol (108-95-2) rate at LMP06 from the LMP06 stream report in Appendix A: 9.42E-03 g/sec (cell H40)
Performance factor for Phenol: 9.42E-03/3.49E-02 = 2.70E-01 (cell I40)

Diethyl Phthalate (84-66-2) feed rate: 3.49E-02 g/sec (cell C206)
Diethyl Phthalate (84-66-2) rate at LMP06 from the LMP06 stream report in Appendix A: 5.30E-03 g/sec (cell H206)
Performance factor for Diethyl Phthalate: 5.30E-03/3.49E-02 = 1.52E-01 (cell I206)

2-sec-Butyl—4,6-dinitrophenol (88-85-7) feed rate: 3.49E-02 g/sec (cell C216)
2-sec-Butyl—4,6-dinitrophenol (88-85-7) rate at LMP06 from the LMP06 stream report in Appendix A: 1.88E-02 g/sec (cell H216)
Performance factor for 2-sec-Butyl—4,6-dinitrophenol: 1.88E-02/3.49E-02 = 5.38E-01 (cell I216)

Since this group is represented by the above 3 constituents, an average performance factor is then calculated and applied to the other constituents. Average performance factor is:
(2.70E-01 (cell I40) + 1.52E-01 (cell I206) + 5.38E-01 (cell I216))/3 = 3.20E-01 (cell N12)

Formaldehyde (50-00-0) feed rate: 7.67E-03 g/sec (cell C115)
Mass rate at LMP06: 7.67E-03 (cell C115) * 3.20E-01 (cell N12) = 2.46E-03 g/sec (cell K115)

Propionic Acid (79-09-4) feed rate: 3.49E-02 g/sec (cell C199)
Mass rate at LMP06: 3.49E-02 (cell C199) * 3.20E-01 (cell N12) = 1.12E-02 g/sec (cell K199)

2-Propenoic Acid (79-10-7) feed rate: 3.49E-02 g/sec (cell C200)
Mass rate at LMP06: 3.49E-02 (cell C200) * 3.20E-01 (cell N12) = 1.12E-02 g/sec (cell K200)

Coplanar PCBs
1336-36-3 feed rate at LMP06 from the LMP06 stream report in Appendix A: 5.47E-11 g/sec (cell H78)
Mass rate for the 14 coplanar PCBs in LMP06 is:
5.47E-11 (cell H78) * 0.01/14 = 3.91E-14 g/sec (cells S7 through S20)
Thus the corrected mass rate of 1336-36-3 in LMP06 is:
5.47E-11 g/sec * 0.99 = 5.42E-11 g/sec

7.4.2 LVP01 Stream

This streams depicts the unabated LAW Vessel Ventilation. This stream is represented by the addition of streams LFP06, RLD32, RLD33, and RLD34. For all the calculations in this section refer to Table B-7. First the feed rate is obtained followed by the mass rate of the representative constituent at the stream specified. The performance factor for this constituent is calculated and applied to the non-represented compounds to obtain their mass rate.

Group 4

Formamide (75-12-7) feed rate: 3.49E-02 g/sec (cell C169)
Formamide (75-12-7) rate at LVP01 from the addition of stream reports LFP06, RLD32, RLD33, and RLD34 in Appendix A: 5.43E-10 g/sec (cell H169)
Performance factor for Formamide: 5.43E-10/3.49E-02 = 1.56E-08 (cell I169, also copied to cell N8)

Dibenz[a,j]acridine (224-42-0) feed rate: 3.49E-02 g/sec (cell C100)
Mass rate at LVP01: 3.49E-02 (cell C100) * 1.56E-08 (cell N8) = 5.43E-10 g/sec (cell K100)
Dibenz[a,h]acridine (226-36-8) feed rate: 3.49E-02 g/sec (cell C101)
Mass rate at LVP01: 3.49E-02 (cell C101) * 1.56E-08 (cell N8) = 5.43E-10 g/sec (cell K101)

Group 8

Phenol (108-95-2) feed rate: 3.49E-02 g/sec (cell C40)
Phenol (108-95-2) rate at LVP01 from the addition of stream reports LFP06, RLD32, RLD33, and RLD34 in Appendix A: 2.07E-10 g/sec (cell H40)
Performance factor for Phenol: 2.07E-10/3.49E-02 = 5.94E-09 (cell I40)

Diethyl Phthalate (84-66-2) feed rate: 3.49E-02 g/sec (cell C206)
Diethyl Phthalate (84-66-2) rate at LVP01 from the addition of stream reports LFP06, RLD32, RLD33, and RLD34 in Appendix A: 1.17E-10 g/sec (cell H206)
Performance factor for Diethyl Phthalate: 1.17E-10/3.49E-02 = 3.35E-09 (cell I206)

2-sec-Butyl—4,6-dinitrophenol (88-85-7) feed rate: 3.49E-02 g/sec (cell C216)
2-sec-Butyl—4,6-dinitrophenol (88-85-7) rate at LVP01 from the addition of stream reports LFP06, RLD32, RLD33, and RLD34 in Appendix A: 6.04E-10 g/sec (cell H216)
Performance factor for 2-sec-Butyl—4,6-dinitrophenol: 6.04E-10/3.49E-02 = 1.73E-08 (cell I216)

Since this group is represented by the above 3 constituents, an average performance factor is then calculated and applied to the other constituents. Average performance factor is:
(5.94E-09 (cell I40) + 3.35E-09 (cell I206) + 1.73E-08 (cell I216))/3 = 8.87E-09 (cell N12)

Formaldehyde (50-00-0) feed rate: 7.67E-03 g/sec (cell C115)
Mass rate at LVP01: 7.67E-03 (cell C115) * 8.87E-09 (cell N12) = 6.81E-11 g/sec (cell K115)

Propionic Acid (79-09-4) feed rate: 3.49E-02 g/sec (cell C199)
Mass rate at LVP01: 3.49E-02 (cell C199) * 8.87E-09 (cell N12) = 3.09E-10 g/sec (cell K199)

2-Propenoic Acid (79-10-7) feed rate: 3.49E-02 g/sec (cell C200)
Mass rate at LVP01: 3.49E-02 (cell C200) * 8.87E-09 (cell N12) = 3.09E-10 g/sec (cell K200)

Coplanar PCBs

1336-36-3 feed rate at LVP01 from the addition of stream reports LFP06, RLD32, RLD33, and RLD34 in Appendix A: 1.76E-18 g/sec (cell H78)
Mass rate for the 14 coplanar PCBs in LVP01 is:
1.76E-18 (cell H78) * 0.01/14 = 1.26E-21 g/sec (cells S7 through S20)
Thus the corrected mass rate for 1336-36-3 in LVP01 is:
1.76E-18 g/sec * 0.99 = 1.74E-18 g/sec

7.4.3 LVP26 Stream

For all the calculations for this stream refer to Table B-8 of Appendix B. Input to this spreadsheet is the results from LMP06 and LVP01 stream calculations. The numbers for LMP06 were imported to Column D (cells D4 through D239). The ones for stream LVP01 were imported to column H (cells H4 through H239). Also all the DFs were imported from Section 2 of this calculation. The corresponding DFs for this stream are related to the following unit operations: SBS, WESP, HEPA filters, TCO, and caustic scrubber. The calculations for Group 4 and Coplanar PCBs are the only ones shown below. The remaining groups are calculated in the same manner.

First the intermediate stream, LOP08, is calculated by applying the DFs for the SBS and WESP to stream LMP06. At this point, the values calculated for LVP01 are added to LOP08 to represent stream LVP03. The DFs for the rest of the unit operations in the system are then applied to the values in LVP03. Final results represent the composition of stream LVP26.

7.4.3.1 LOP08 Calculation

Group 4
Formamide (75-12-7) mass rate at LMP06: 2.47E-02 g/sec (cell D169)
Formamide (75-12-7) DFs throughout the LAW Primary Offgas system:
SBS: 1 (cell E169)
WESP: 1 (cell F169)
Formamide LOP08 mass rate: 2.47E-02 / (1*1) = 2.47E-02 g/sec (cell G169)

Dibenz[a,j]acridine (224-42-0) mass rate at LMP06: 2.47E-02 g/sec (cell D100)
Dibenz[a,j]acridine (224-42-0) DFs throughout the LAW Primary Offgas system:
SBS: 40 (cell E100)
WESP: 11 (cell F100)
Dibenz[a,j]acridine LOP08 mass rate: 2.47E-02 / (40*11) = 5.61E-05 g/sec (cell G100)

Dibenz[a,h]acridine (226-36-8) feed rate mass rate at LMP06: 2.47E-02 g/sec (cell D101)
Dibenz[a,h]acridine (226-36-8) DFs throughout the LAW Primary Offgas system:
SBS: 40 (cell E101)
WESP: 11 (cell F101)
Dibenz[a,h]acridine LOP08 mass rate: 2.47E-02 / (40*11) = 5.61E-05 g/sec (cell G101)

Coplanar PCBs
1336-36-3 corrected mass rate at LMP06: 5.42E-11 g/sec (cell D78)
1336-36-3 DFs throughout the PJV system:
SBS: 40 (cell E78)
WESP: 11 (cell F78)
1336-36-3 LOP08 mass rate: 5.42E-11 / (40*11) = 1.23E-13 (cell G78)
Mass rate for the 14 coplanar PCBs in LOP08 is:
1.23E-13 (cell G78) * 0.01/14/0.99 = 8.88E-17 g/sec (cells D244 through D257)

7.4.3.2 LVP03 Calculation

The composition of this stream is calculated by summing the mass rates in streams LVP01 and LOP08 for each constituents.

Group 4
Formamide (75-12-7) mass rate at LVP01: 5.43E-10 g/sec (cell H169)
Formamide (75-12-7) mass rate at LOP08: 2.47E-02 g/sec (cell G169)
Formamide (75-12-7) mass rate at LVP03: 5.43E-10 + 2.47E-02 = 2.47E-02 g/sec (cell I169)

Dibenz[a,j]acridine (224-42-0) mass rate at LVP01: 5.43E-10 g/sec (cell H100)
Dibenz[a,j]acridine (224-42-0) mass rate at LOP08: 5.61E-05 g/sec (cell G100)
Dibenz[a,j]acridine (224-42-0) mass rate at LVP03: 5.43E-10 + 5.61E-05 = 5.61E-05 g/sec (cell I100)

Dibenz[a,h]acridine (226-36-8) mass rate at LVP01: 5.43E-10 g/sec (cell H101)
Dibenz[a,h]acridine (226-36-8) mass rate at LOP08: 5.61E-05 g/sec (cell G101)
Dibenz[a,h]acridine (226-36-8) mass rate at LVP03: 5.43E-10 + 5.61E-05 = 5.61E-05 g/sec (cell I101)

Coplanar PCBs
1336-36-3 mass rate at LVP01: 1.74E-18 g/sec (cell H78)
1336-36-3 mass rate at LOP08: 1.23E-13 g/sec (cell G78)
1336-36-3 mass rate at LVP03: 1.74E-18 + 1.23E-13 = 1.23E-13 g/sec (cell I78)
Mass rate for the 14 coplanar PCBs in LVP03 is:
Mass rate at LVP01: 1.26E-21 g/sec (cell H244)
Mass rate at LOP08: 8.88E-17 g/sec (cell D244)
Mass rate at LVP03 = 1.26E-21 g/sec + 8.88E-17 g/sec = 8.88E-17 g/sec (cells I244 through I257)

7.4.3.3 LVP26 Calculation

The composition of this stream is calculated by using the values of stream LVP03 and applying the corresponding DFs from the following units: HEPA Filters, TCO, and Caustic Scrubber. The calculations for Group 4 and Coplanar PCBs are the only ones shown below as all the rest of the calculations are the same.

Group 4
Formamide (75-12-7) mass rate at LVP03: 2.47E-02 g/sec (cell I169)
Formamide (75-12-7) DFs throughout the LVP system:
HEPA 1: 1 (cell J169)
HEPA 2: 1 (cell K169)
TCO: 20 (cell L169)
NaOH Scrubber: 1 (cell M169)
Formamide LVP26 stack mass rate: 2.47E-02 / (1*1*20*1) = 1.24E-03 g/sec (cell N169)

Dibenz[a,j]acridine (224-42-0) mass rate at LVP03: 5.61E-05 g/sec (cell I100)
Dibenz[a,j]acridine (224-42-0) DFs throughout the LVP system:
HEPA 1: 2,000 (cell J100)
HEPA 2: 100 (cell K100)
TCO: 20 (cell L100)
NaOH Scrubber: 1 (cell M100)
Dibenz[a,j]acridine LVP26 stack mass rate: 5.61E-05 / (2,000*100*20*1) = 1.40E-11 g/sec (cell N100)

Dibenz[a,h]acridine (226-36-8) feed rate mass rate at LVP03: 5.61E-05 g/sec (cell I101)
Dibenz[a,h]acridine (226-36-8) DFs throughout the LVP system:
HEPA 1: 2,000 (cell J101)
HEPA 2: 100 (cell K101)

TCO: 20 (cell L101)
NaOH Scrubber: 1 (cell M101)
Dibenz[a,h]acridine LVP26 stack mass rate: 5.61E-05 / (2,000*100*20*1) = 1.40E-11 g/sec (cell N101)

Coplanar PCBs
1336-36-3 mass rate at LVP03: 1.23E-13 g/sec (cell I78)
1336-36-3 DFs throughout the LVP system:
HEPA 1: 2,000 (cell J78)
HEPA 2: 100 (cell K78)
TCO: 20 (cell L78)
NaOH Scrubber: 1 (cell M78)
1336-36-3 LPV26 stack mass rate: 1.23E-13 / (2,000*100*20*1) = 3.08E-20 g/sec (cell N78)
Mass rate for the 14 coplanar PCBs in LVP26 is:
3.08E-20 (cell N78) * 0.01/14 = 2.22E-23 g/sec (cells N244 through N257)

7.5 HLW Vitrification Analysis

To determine the stack releases from the HLW Melter Offgas System (HOP), first the mass rates of all the constituents are calculated in stream HMP06 (the unabated HLW Melter Offgas stream). From these values, the DFs that correspond to the SBS and WESP are applied to each constituent. These results are representative of HOP07. At this point the HLW Vessel Ventilation header joins the main offgas system. At this point, the mass rates of all the constituents are calculated in stream HOP10 (the unabated HLW Vessel Ventilation Header). The values from these two streams, HOP07 and HOP10, are then added together to represent stream HOP11 (combined offgas stream). From this point on, the corresponding DFs for each constituent within the system are applied to these values to obtain the final stack releases (stream HOP33).

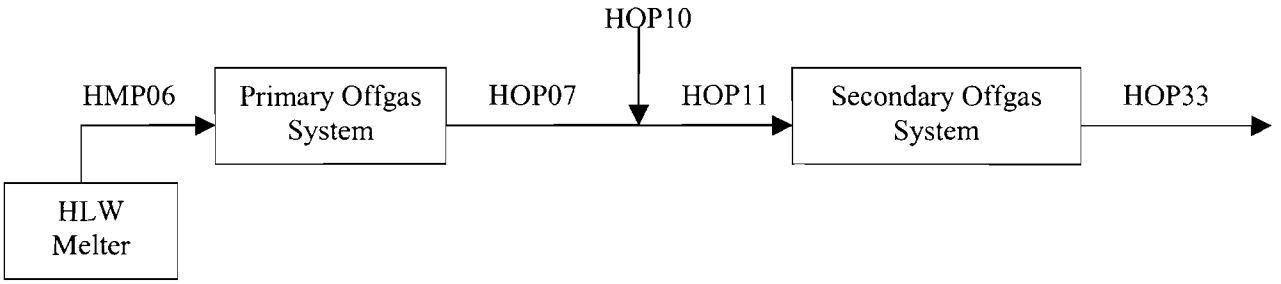

7.5.1 HMP06 Stream

This streams depicts the unabated HLW Melter Offgas. For all the calculations in this section refer to Table B-9. First the feed rate is obtained followed by the mass rate of the representative constituent at the stream specified. The performance factor for this constituent is calculated and applied to the non-represented compounds to obtain their mass rate.

Group 4
Formamide (75-12-7) feed rate: 3.49E-02 g/sec (cell C169)
Formamide (75-12-7) rate at HMP06 from the HMP06 stream report in Appendix A: 6.80E-03 g/sec (cell H169)
Performance factor for Formamide: 6.80E-03/3.49E-02 = 1.95E-01 (cell I169, also copied to cell N8)

Dibenz[a,j]acridine (224-42-0) feed rate: 3.49E-02 g/sec (cell C100)
Mass rate at HMP06: 3.49E-02 (cell C100) * 1.95E-01 (cell N8) = 6.80E-03 g/sec (cell K100)
Dibenz[a,h]acridine (226-36-8) feed rate: 3.49E-02 g/sec (cell C101)
Mass rate at HMP06: 3.49E-02 (cell C101) * 1.95E-01 (cell N8) = 6.80E-03 g/sec (cell K101)

Group 8
Phenol (108-95-2) feed rate: 3.49E-02 g/sec (cell C40)
Phenol (108-95-2) rate at HMP06 from the HMP06 stream report in Appendix A: 6.71E-03 g/sec (cell H40)
Performance factor for Phenol: 6.71E-03/3.49E-02 = 1.93E-01 (cell I40)

Diethyl Phthalate (84-66-2) feed rate: 3.49E-02 g/sec (cell C206)
Diethyl Phthalate (84-66-2) rate at HMP06 from the HMP06 stream report in Appendix A: 6.33E-03 g/sec (cell H206)
Performance factor for Diethyl Phthalate: 6.33E-03/3.49E-02 = 1.82E-01 (cell I206)

2-sec-Butyl—4,6-dinitrophenol (88-85-7) feed rate: 3.49E-02 g/sec (cell C216)
2-sec-Butyl—4,6-dinitrophenol (88-85-7) rate at HMP06 from the HMP06 stream report in Appendix A: 9.69E-03 g/sec (cell H216)
Performance factor for 2-sec-Butyl—4,6-dinitrophenol: 9.69E-03/3.49E-02 = 2.78E-01 (cell I216)

Since this group is represented by the above 3 constituents, an average performance factor is then calculated and applied to the other constituents. Average performance factor is:
(1.93E-01 (cell I40) + 1.82E-01 (cell I206) + 2.78E-01 (cell I216))/3 = 2.17E-01 (cell N12)

Formaldehyde (50-00-0) feed rate: 7.67E-03 g/sec (cell C115)
Mass rate at HMP06: 7.67E-03 (cell C115) * 2.17E-01 (cell N12) = 1.67E-03 g/sec (cell K115)

Propionic Acid (79-09-4) feed rate: 3.49E-02 g/sec (cell C199)
Mass rate at HMP06: 3.49E-02 (cell C199) * 2.17E-01 (cell N12) = 7.58E-03 g/sec (cell K199)

2-Propenoic Acid (79-10-7) feed rate: 3.49E-02 g/sec (cell C200)
Mass rate at HMP06: 3.49E-02 (cell C200) * 2.17E-01 (cell N12) = 7.58E-03 g/sec (cell K200)

Coplanar PCBs
1336-36-3 feed rate at HMP06 from the HMP06 stream report in Appendix A: 6.69E-05 g/sec (cell H78)
Mass rate for the 14 coplanar PCBs in HMP06 is:
6.69E-05 (cell H78) * 0.01/14 = 4.78E-08 g/sec (cells S7 through S20)
Thus the correct mass rate for 1336-36-3 in HMP06 is:
6.69E-05 g/sec * 0.99 = 6.62E-05 g/sec

7.5.2 HOP10 Stream

This streams depicts the unabated HLW Vessel Ventilation. For all the calculations in this section refer to Table B-10. First the feed rate is obtained followed by the mass rate of the representative constituent at the stream specified. The performance factor for this constituent is calculated and applied to the non-represented compounds to obtain their mass rate.

Group 4
Formamide (75-12-7) feed rate: 3.49E-02 g/sec (cell C169)

Formamide (75-12-7) rate at HOP10 from the HOP10 stream report in Appendix A: 2.11E-09 g/sec (cell H169)
Performance factor for Formamide: 2.11E-09/3.49E-02 = 6.06E-08 (cell I169, also copied to cell N8)

Dibenz[a,j]acridine (224-42-0) feed rate: 3.49E-02 g/sec (cell C100)
Mass rate at HOP10: 3.49E-02 (cell C100) * 6.06E-08 (cell N8) = 2.11E-09 g/sec (cell K100)
Dibenz[a,h]acridine (226-36-8) feed rate: 3.49E-02 g/sec (cell C101)
Mass rate at HOP10: 3.49E-02 (cell C101) * 6.06E-08 (cell N8) = 2.11E-09 g/sec (cell K101)

Group 8
Phenol (108-95-2) feed rate: 3.49E-02 g/sec (cell C40)
Phenol (108-95-2) rate at HOP10 from the HOP10 stream report in Appendix A: 4.95E-07 g/sec (cell H40)
Performance factor for Phenol: 4.95E-07/3.49E-02 = 1.42E-05 (cell I40)

Diethyl Phthalate (84-66-2) feed rate: 3.49E-02 g/sec (cell C206)
Diethyl Phthalate (84-66-2) rate at HOP10 from the HOP10 stream report in Appendix A: 8.55E-07 g/sec (cell H206)
Performance factor for Diethyl Phthalate: 8.57E-07/3.49E-02 = 2.45E-05 (cell I206)

2-sec-Butyl—4,6-dinitrophenol (88-85-7) feed rate: 3.49E-02 g/sec (cell C216)
2-sec-Butyl—4,6-dinitrophenol (88-85-7) rate at HOP10 from the HOP10 stream report in Appendix A: 2.94E-06 g/sec (cell H216)
Performance factor for 2-sec-Butyl—4,6-dinitrophenol: 2.94E-06/3.49E-02 = 8.42E-05 (cell I216)

Since this group is represented by the above 3 constituents, an average performance factor is then calculated and applied to the other constituents. Average performance factor is:
(1.42E-05 (cell I40) + 2.45E-05 (cell I206) + 8.42E-05 (cell I216))/3 = 4.10E-05 (cell N12)

Formaldehyde (50-00-0) feed rate: 7.67E-03 g/sec (cell C115)
Mass rate at HOP10: 7.67E-03 (cell C115) * 4.10E-05 (cell N12) = 3.14E-07 g/sec (cell K115)

Propionic Acid (79-09-4) feed rate: 3.49E-02 g/sec (cell C199)
Mass rate at HOP10: 3.49E-02 (cell C199) * 4.10E-05 (cell N12) = 1.43E-06 g/sec (cell K199)

2-Propenoic Acid (79-10-7) feed rate: 3.49E-02 g/sec (cell C200)
Mass rate at HOP10: 3.49E-02 (cell C200) * 4.10E-05 (cell N12) = 1.43E-06 g/sec (cell K200)

Coplanar PCBs
1336-36-3 feed rate at HOP10 from the HOP10 stream report in Appendix A: 1.95E-05 g/sec (cell H78)
Mass rate for the 14 coplanar PCBs in HOP10 is:
1.95E-05 (cell H78) * 0.01/14 = 1.39E-08 g/sec (cells S7 through S20)
Thus the corrected mass rate for 1336-36-3 in HOP10 is:
1.95E-05 g/sec * 0.99 = 1.93E-05 g/sec

7.5.3 HOP33 Stream

For all the calculations for this stream refer to Table B-11 of Appendix B. Input to this spreadsheet is the results from HMP06 and HOP10 stream calculations. The numbers for HMP06 were imported to Column D (cells D4 through D239). The ones for stream HOP10 are imported to column H (cells H4 through H239). Also all the DFs are imported from Section 2 of this calculation. The corresponding DFs for this stream are related to the following

unit operations: SBS, WESP, HEME, HEPA filters, and TCO. The calculations for Group 4 and Coplanar PCBs are the only ones shown below. The remaining groups are calculated in the same manner.

First the intermediate stream, HOP07, is calculated by applying the DFs for the SBS and WESP to stream LMP06. At this point, the values calculated for HOP10 are added to HOP07 to represent stream HOP11. The DFs for the rest of the unit operations in the system are then applied to the values in HOP11. Final results represent the composition of stream HOP33.

7.5.3.1 HOP07 Calculation

Group 4
Formamide (75-12-7) mass rate at HMP06: 6.80E-03 g/sec (cell D169)
Formamide (75-12-7) DFs throughout the LAW Primary Offgas system:
SBS: 1 (cell E169)
WESP: 1 (cell F169)
Formamide HOP07 mass rate: 6.80E-03 / (1*1) = 6.80E-03 g/sec (cell G169)

Dibenz[a,j]acridine (224-42-0) mass rate at HMP06: 6.80E-03 g/sec (cell D100)
Dibenz[a,j]acridine (224-42-0) DFs throughout the LAW Primary Offgas system:
SBS: 40 (cell E100)
WESP: 11 (cell F100)
Dibenz[a,j]acridine HOP07 mass rate: 6.80E-03 / (40*11) = 1.55E-05 g/sec (cell G100)

Dibenz[a,h]acridine (226-36-8) feed rate mass rate at HMP06: 6.80E-03 g/sec (cell D101)
Dibenz[a,h]acridine (226-36-8) DFs throughout the LAW Primary Offgas system:
SBS: 40 (cell E101)
WESP: 11 (cell F101)
Dibenz[a,h]acridine HOP07 mass rate: 6.80E-03 / (40*11) = 1.55E-05 g/sec (cell G101)

Coplanar PCBs
1336-36-3 mass rate at HMP06: 6.62E-05 g/sec (cell D78)
1336-36-3 DFs throughout the PJV system:
SBS: 40 (cell E78)
WESP: 11 (cell F78)
1336-36-3 HOP07 mass rate: 6.62E-05 / (40*11) = 1.51E-07 g/sec (cell G78)
Mass rate for the 14 coplanar PCBs in HOP07 is:
1.51E-07 (cell G78) * 0.01/14/0.99 = 1.09E-10 g/sec (cells D244 through D257)

7.5.3.2 HOP11 Calculation

The composition of this stream is calculated by summing the mass rates in streams HOP10 and HOP07 for each constituents.

Group 4
Formamide (75-12-7) mass rate at HOP10: 2.11E-09 g/sec (cell H169)
Formamide (75-12-7) mass rate at HOP07: 6.80E-03 g/sec (cell G169)
Formamide (75-12-7) mass rate at HOP11: 2.11E-09 + 6.80E-03 = 6.80E-03 g/sec (cell I169)

Dibenz[a,j]acridine (224-42-0) mass rate at HOP10: 2.11E-09 g/sec (cell H100)

Dibenz[a,j]acridine (224-42-0) mass rate at HOP07: 1.55E-05 g/sec (cell G100)
Dibenz[a,j]acridine (224-42-0) mass rate at HOP11: 2.11E-09 + 1.55E-05 = 1.55E-05 g/sec (cell I100)

Dibenz[a,h]acridine (226-36-8) mass rate at HOP10: 2.11E-09 g/sec (cell H101)
Dibenz[a,h]acridine (226-36-8) mass rate at HOP07: 1.55E-05 g/sec (cell G101)
Dibenz[a,h]acridine (226-36-8) mass rate at HOP11: 2.11E-09 + 1.55E-05 = 1.55E-05 g/sec (cell I101)

Coplanar PCBs
1336-36-3 mass rate at HOP10: 1.93E-05 g/sec (cell H78)
1336-36-3 mass rate at HOP07: 1.51E-07 g/sec (cell G78)
1336-36-3 mass rate at HOP11: 1.93E-05 + 1.51E-07 = 1.95E-05 g/sec (cell I78)
Mass rate for the 14 coplanar PCBs in HOP11 is:
Mass rate at HOP10: 1.39E-08 g/sec (cell H244)
Mass rate at HOP07: 1.09E-10 g/sec (cell D244)
Mass rate at HOP11: 1.39E-08 g/sec + 1.09E-10 g/sec = 1.41E-08 g/sec (cells I244 through I257)

7.5.3.3 HOP33 Calculation

The composition of this stream is calculated by using the values of stream HOP11 and applying the corresponding DFs from the following units: HEME, HEPA Filters, and TCO. The calculations for Group 4 and Coplanar PCBs are the only ones shown below as all the rest of the calculations are the same.

Group 4
Formamide (75-12-7) mass rate at HOP11: 6.80E-03 g/sec (cell I169)
Formamide (75-12-7) DFs throughout the HOP system:
HEME: 1 (cell J169)
HEPA 1: 1 (cell K169)
HEPA 2: 1 (cell L169)
TCO: 20 (cell M169)
Formamide HOP33 stack mass rate: 6.80E-03 / (1*1*1*20) = 3.40E-04 g/sec (cell N169)

Dibenz[a,j]acridine (224-42-0) mass rate at HOP11: 1.55E-05 g/sec (cell I100)
Dibenz[a,j]acridine (224-42-0) DFs throughout the HOP system:
HEME: 90 (cell J100)
HEPA 1: 2,000 (cell K100)
HEPA 2: 100 (cell L100)
TCO: 20 (cell M100)
Dibenz[a,j]acridine HOP33 stack mass rate: 1.55E-05 / (90*2,000*100*20) = 4.30E-14 g/sec (cell N100)

Dibenz[a,h]acridine (226-36-8) feed rate mass rate at HOP11: 1.55E-05 g/sec (cell I101)
Dibenz[a,h]acridine (226-36-8) DFs throughout the HOP system:
HEME: 90 (cell J101)
HEPA 1: 2,000 (cell K101)
HEPA 2: 100 (cell L101)
TCO: 20 (cell M101)
Dibenz[a,h]acridine HOP33 stack mass rate: 1.55E-05 / (90*2,000*100*20) = 4.30E-14 g/sec (cell N101)

Coplanar PCBs
1336-36-3 mass rate at HOP11: 1.95E-05 g/sec (cell I78)

1336-36-3 DFs throughout the HOP system:

HEME: 90 (cell J78)
HEPA 1: 2,000 (cell K78)
HEPA 2: 100 (cell L78)
TCO: 20 (cell M78)

1336-36-3 HOP33 stack mass rate: 1.89E-05 / (90*2,000*100*20) = 5.41E-14 g/sec (cell N78)
Mass rate for the 14 coplanar PCBs in HOP33 is:
5.41E-14 (cell N78) * 0.01/14/0.99 = 3.90E-17 g/sec (cells N244 through N257)

7.6 HLW PJM/RFD Analysis

To determine the stack releases from the HLW PJM/RFD Ventilation System (PJV), first the mass rates of all the constituents are calculated in stream PJV32 (the unabated HLW PJM/RFD Vent stream). Then the corresponding DFs for each constituent within the system are applied to these values to obtain the final stack releases (stream PJV34).

7.6.1 PJV32 Stream

This streams depicts the unabated HLW RFD/PJM Ventilation. For all the calculations in this section refer to Table B-12. First the feed rate is obtained followed by the mass rate of the representative constituent at the stream specified. The performance factor for this constituent is calculated and applied to the non-represented compounds to obtain their mass rate.

Group 4
Formamide (75-12-7) feed rate: 3.49E-02 g/sec (cell C169)
Formamide (75-12-7) rate at PJV32 from the PJV32 stream report in Appendix A: 7.48E-13 g/sec (cell H169)
Performance factor for Formamide: 7.48E-13/3.49E-02 = 2.15E-11 (cell I169, also copied to cell N8)

Dibenz[a,j]acridine (224-42-0) feed rate: 3.49E-02 g/sec (cell C100)
Mass rate at PVP01: 3.49E-02 (cell C100) * 2.15E-11 (cell N8) = 7.48E-13 g/sec (cell K100)
Dibenz[a,h]acridine (226-36-8) feed rate: 3.49E-02 g/sec (cell C101)
Mass rate at PVP01: 3.49E-02 (cell C101) * 2.15E-11 (cell N8) = 7.48E-13 g/sec (cell K101)

Group 8
Phenol (108-95-2) feed rate: 3.49E-02 g/sec (cell C40)
Phenol (108-95-2) rate at PJV32 from the PJV32 stream report in Appendix A: 7.39E-13 g/sec (cell H40)
Performance factor for Phenol: 7.39E-13/3.49E-02 = 2.12E-11 (cell I40)

Diethyl Phthalate (84-66-2) feed rate: 3.49E-02 g/sec (cell C206)
Diethyl Phthalate (84-66-2) rate at PJV32 from the PJV32 stream report in Appendix A: 6.97E-13 g/sec (cell H206)
Performance factor for Diethyl Phthalate: 6.97E-13/3.49E-02 = 2.00E-11 (cell I206)

2-sec-Butyl—4,6-dinitrophenol (88-85-7) feed rate: 3.49E-02 g/sec (cell C216)
2-sec-Butyl—4,6-dinitrophenol (88-85-7) rate at PJV32 from the PJV32 stream report in Appendix A: 1.29E-11 g/sec (cell H216)
Performance factor for 2-sec-Butyl—4,6-dinitrophenol: 1.29E-11/3.49E-02 = 3.69E-10 (cell I216)

Since this group is represented by the above 3 constituents, an average performance factor is then calculated and applied to the other constituents. Average performance factor is:

(2.12E-11 (cell I40) + 2.0E-11 (cell I206) + 3.69E-11 (cell I216))/3 = 1.37E-10 (cell N12)

Formaldehyde (50-00-0) feed rate: 7.67E-03 g/sec (cell C115)
Mass rate at PVP01: 7.67E-03 (cell C115) * 1.37E-10 (cell N12) = 1.05E-12 g/sec (cell K115)

Propionic Acid (79-09-4) feed rate: 3.49E-02 g/sec (cell C199)
Mass rate at PVP01: 3.49E-02 (cell C199) * 1.37E-10 (cell N12) = 4.77E-12 g/sec (cell K199)

2-Propenoic Acid (79-10-7) feed rate: 3.49E-02 g/sec (cell C200)
Mass rate at PVP01: 3.49E-02 (cell C200) * 1.37E-10 (cell N12) = 4.77E-12 g/sec (cell K200)

Coplanar PCBs
1336-36-3 feed rate at PJV32 from the PJV32 stream report in Appendix A: 1.15E-13 g/sec (cell H78)
Mass rate for the 14 coplanar PCBs in PJV32 is:
1.15E-13 (cell H78) * 0.01/14 = 8.20E-17 g/sec (cells S7 through S20)
Thus the corrected mass rate for 1336-36-3 in PJV32 is:
1.15E-13 g/sec * 0.99 = 1.14E-13 g/sec

7.6.2 PJV34 Stream

For all the calculations for this stream refer to Table B-13 of Appendix B. Input to this spreadsheet is the results from PJV32 stream calculations. These numbers are imported to Column C (cells C4 through C239). Also all the DFs are imported from Section 2 of this calculation. The corresponding DFs for this stream are related to the following unit operations: HEPA filters. The calculations for Group 4 and Coplanar PCBs are the only ones shown below as all the rest of the calculations are the same.

Group 4
Formamide (75-12-7) mass rate at PJV32: 7.48E-13 g/sec (cell C169)
Formamide (75-12-7) DFs throughout the PJV system:
HEPA 1: 1 (cell D169)
HEPA 2: 1 (cell E169)
Formamide PJV34 stack mass rate: 7.48E-13 / (1*1) = 7.48E-13 g/sec (cell F169)

Dibenz[a,j]acridine (224-42-0) mass rate at PJV32: 7.48E-13 g/sec (cell C100)
Dibenz[a,j]acridine (224-42-0) DFs throughout the PJV system:
HEPA 1: 2,000 (cell D100)
HEPA 2: 100 (cell E100)
Dibenz[a,j]acridine PJV34 stack mass rate: 7.48E-13 / (2,000*100) = 3.74E-18 g/sec (cell F100)

Dibenz[a,h]acridine (226-36-8) feed rate mass rate at PJV32: 7.48E-13 g/sec (cell C101)
Dibenz[a,h]acridine (226-36-8) DFs throughout the PJV system:
HEPA 1: 2,000 (cell D101)
HEPA 2: 100 (cell E101)
Dibenz[a,h]acridine PJV34 stack mass rate: 7.48E-13 / (2,000*100) = 3.74E-18 g/sec (cell F101)

Coplanar PCBs
1336-36-3 corrected mass rate at PJV32: 1.14E-13 g/sec (cell C78)
1336-36-3 DFs throughout the PJV system:
HEPA 1: 2,000 (cell E78)

HEPA 2: 100 (cell F78)
1336-36-3 PJV34 stack mass rate: 1.14E-13 / (2,000*100) = 5.68E-19 g/sec (cell F78)
Mass rate for the 14 coplanar PCBs in PJV34 is:
5.68E-19 (cell F78) * 0.01/14/0.99 = 4.10E-22 g/sec (cells J6 through J19)

8 Results and Conclusion

A summary of the results per constituent per stream is presented below. Emissions rates from the non-represented organic compounds in the SSFM have been estimated in this calculation. These rates will be reported in the next revision of the *Integrated Emissions Baseline Report for the River Protection Project Waste Treatment Plant* (RPT-W375-ES00001). This calculation will be updated each time a new official emissions profile is generated.

CALCULATION SHEET

BY: E. Berrios
DATE: 05/21/03

PROJECT: WTP
JOB NO : 24590
CALC NO.: 24590-WTP-M4C-FRP-00005
SHEET REV: A
SHEET NO.: 49

	A	B	C	D	E	F	G	H	I	J	K	L	M
1	**Table 1 Summary of Organic Constituents Emission Rates for the WTP**												
2	CAS #	COPC	Feed	Unabated Streams					Abated Streams				
3			FRF14	PVP01	PJV04	LMP06	HMP06	PJV32	PVP12	PJV11	LVP26	HOP33	PJV34
4			WTP Feed	PT Vessel Vent	PT RFD/PJM	LAW Melter	HLW Melter	HLW PJM/RFD	PT Vessel Vent	PT RFD/PJM	LAW Melter	HLW Melter	HLW PJM/RFD
5			g/sec	g/sec	g/sec	g/sec	g/sec	g/sec	g/sec	g/sec	g/sec	g/sec	g/sec
6	100-00-5	p-Nitrochlorobenzene	3.49E-02	2.32E-03	1.42E-06	2.55E-04	5.03E-03	3.82E-12	4.65E-08	1.42E-06	1.27E-05	2.52E-04	3.82E-12
7	100-21-0	p-Phthalic acid	3.49E-02	3.05E-08	2.90E-06	2.48E-02	6.81E-03	7.49E-13	3.05E-11	2.90E-06	1.24E-03	3.41E-04	7.49E-13
8	100-25-4	1,4-Dinitrobenzene	3.49E-02	2.15E-05	2.82E-06	2.28E-02	6.86E-03	7.54E-13	3.25E-18	2.82E-12	1.29E-11	4.34E-14	3.77E-18
9	100-41-4	Ethyl benzene	7.67E-03	7.69E-03	7.78E-08	0.00E+00	1.17E-12	3.90E-22	7.69E-07	7.78E-08	0.00E+00	1.89E-13	3.90E-22
10	100-42-5	Styrene	7.67E-03	7.70E-03	7.92E-08	0.00E+00	3.39E-10	5.85E-20	7.70E-07	7.92E-08	0.00E+00	2.75E-11	5.85E-20
11	10061-01-5	cis-1,3-Dichloropropene	7.67E-03	7.72E-03	8.06E-08	0.00E+00	9.78E-10	1.66E-19	7.72E-05	8.06E-08	0.00E+00	7.83E-11	1.66E-19
12	10061-02-6	trans-1,3-Dichloropropene	7.67E-03	7.66E-03	8.33E-08	0.00E+00	1.88E-08	2.66E-18	1.53E-04	8.33E-08	0.00E+00	1.24E-09	2.66E-18
13	101-55-3	4-Bromophenylphenyl ether	3.49E-02	2.41E-02	6.48E-07	1.03E-07	3.50E-04	3.94E-14	1.45E-04	6.48E-07	5.13E-09	1.80E-05	3.94E-14
14	101-84-8	Diphenyl ether	7.67E-03	7.19E-03	9.69E-08	7.45E-13	2.99E-06	3.51E-16	2.87E-05	9.69E-08	3.73E-14	1.61E-07	3.51E-16
15	106-35-4	3-Heptanone	7.67E-03	5.31E-03	1.43E-07	2.26E-08	7.71E-05	8.67E-15	5.31E-07	1.43E-07	1.13E-09	3.95E-06	8.67E-15
16	106-42-3	p-Xylene (Dimethyl benzene)	7.67E-03	7.70E-03	7.92E-08	0.00E+00	3.39E-10	5.85E-20	7.70E-06	7.92E-08	0.00E+00	2.75E-11	5.85E-20
17	106-46-7	1,4-Dichlorobenzene	7.67E-03	7.86E-03	8.43E-08	0.00E+00	8.79E-09	1.30E-18	7.86E-05	8.43E-08	0.00E+00	6.05E-10	1.30E-18
18	106-88-7	1,2-Epoxybutane	7.67E-03	6.54E-03	1.17E-07	1.14E-09	1.74E-05	1.99E-15	6.54E-07	1.17E-07	5.68E-11	9.10E-07	1.99E-15
19	106-93-4	Ethylene dibromide (Dibromethane)	3.49E-02	3.41E-02	4.10E-07	1.02E-11	1.87E-06	2.33E-16	3.41E-03	4.10E-07	5.08E-13	1.07E-07	2.33E-16
20	106-97-8	Butane	7.67E-03	7.71E-03	7.71E-08	0.00E+00	0.00E+00	0.00E+00	7.71E-07	7.71E-08	0.00E+00	0.00E+00	0.00E+00
21	106-99-0	1,3-Butadiene	7.67E-03	7.71E-03	7.72E-08	0.00E+00	0.00E+00	2.11E-26	7.71E-07	7.72E-08	0.00E+00	0.00E+00	2.11E-26
22	107-02-8	Acrolein	7.67E-03	5.31E-03	1.43E-07	2.26E-08	7.71E-05	8.67E-15	5.31E-07	1.43E-07	1.13E-09	3.95E-06	8.67E-15
23	107-05-1	3-Chloropropene (Allyl chloride)	7.67E-03	7.69E-03	7.78E-08	0.00E+00	1.17E-12	3.90E-22	7.69E-07	7.78E-08	0.00E+00	1.89E-13	3.90E-22
24	107-06-2	1,2-Dichloroethane (Ethylene chloride)	7.67E-03	7.66E-03	8.33E-08	0.00E+00	1.88E-08	2.66E-18	7.66E-07	8.33E-08	0.00E+00	1.24E-09	2.66E-18
25	107-12-0	Propionitrile	7.67E-03	3.05E-03	1.86E-07	4.05E-07	3.23E-04	3.59E-14	3.05E-07	1.86E-07	2.02E-08	1.63E-05	3.59E-14
26	107-13-1	Acrylonitrile	7.67E-03	5.31E-03	1.43E-07	2.26E-08	7.71E-05	8.67E-15	5.31E-07	1.43E-07	1.13E-09	3.95E-06	8.67E-15
27	107-18-6	2-Propene-1-ol	3.49E-02	2.32E-03	1.42E-06	2.55E-04	5.03E-03	3.82E-12	2.32E-07	1.42E-06	1.27E-05	2.52E-04	3.82E-12
28	107-31-3	Formic acid, methyl ester	3.49E-02	2.97E-02	5.30E-07	5.16E-09	7.90E-05	9.06E-15	2.97E-06	5.30E-07	2.58E-10	4.14E-06	9.06E-15
29	107-66-4	Dibutylphosphate	3.49E-02	9.95E-06	2.88E-06	2.40E-02	6.86E-03	7.55E-13	7.54E-18	2.88E-12	1.36E-11	4.34E-14	3.77E-18
30	107-87-9	2-Pentanone	7.67E-03	5.31E-03	1.43E-07	2.26E-08	7.71E-05	8.67E-15	5.31E-07	1.43E-07	1.13E-09	3.95E-06	8.67E-15
31	108-03-2	1-Nitropropane	3.49E-02	2.41E-02	6.48E-07	1.03E-07	3.50E-04	3.94E-14	2.41E-06	6.48E-07	5.13E-09	1.80E-05	3.94E-14
32	108-05-4	Vinyl acetate	3.49E-02	3.27E-02	4.40E-07	3.39E-12	1.36E-05	1.60E-15	3.27E-06	4.40E-07	1.69E-13	7.31E-07	1.60E-15
33	108-10-1	Hexone (4-Methyl-2-pentanone or MIBK)	7.67E-03	5.31E-03	1.43E-07	2.26E-08	7.71E-05	8.67E-15	5.31E-07	1.43E-07	1.13E-09	3.95E-06	8.67E-15
34	108-20-3	Bis(isopropyl)ether	7.67E-03	7.86E-03	8.43E-08	0.00E+00	8.79E-09	1.30E-18	7.86E-07	8.43E-08	0.00E+00	6.05E-10	1.30E-18
35	108-38-3	m-Xylene (Dimethyl benzene)	7.67E-03	7.70E-03	7.92E-08	0.00E+00	3.39E-10	5.85E-20	7.70E-06	7.92E-08	0.00E+00	2.75E-11	5.85E-20
36	108-39-4	m-Cresol	7.67E-03	2.09E-04	3.20E-07	2.59E-04	1.16E-03	1.28E-13	1.04E-07	3.20E-07	1.36E-05	5.82E-05	1.28E-13
37	108-87-2	Methylcyclohexane	7.67E-03	7.68E-03	7.69E-08	0.00E+00	0.00E+00	0.00E+00	7.68E-07	7.69E-08	0.00E+00	0.00E+00	0.00E+00
38	108-88-3	Toluene	7.67E-03	7.70E-03	7.84E-08	0.00E+00	1.06E-11	2.73E-21	7.70E-07	7.84E-08	0.00E+00	1.31E-12	2.73E-21
39	108-90-7	Chlorobenzene	7.67E-03	7.70E-03	7.92E-08	0.00E+00	3.39E-10	5.85E-20	7.70E-05	7.92E-08	0.00E+00	2.75E-11	5.85E-20
40	108-93-0	Cyclohexanol	7.67E-03	5.11E-04	3.13E-07	5.60E-05	1.11E-03	8.41E-13	2.56E-08	3.13E-07	2.80E-06	5.54E-05	8.41E-13
41	108-94-1	Cyclohexanone	7.67E-03	8.63E-04	2.39E-07	1.17E-05	7.96E-04	8.78E-14	4.32E-08	2.39E-07	5.87E-07	3.99E-05	8.78E-14
42	108-95-2	Phenol	3.49E-02	2.41E-04	2.21E-06	9.42E-03	6.71E-03	7.39E-13	1.21E-06	2.21E-06	4.71E-04	3.36E-04	7.39E-13
43	109-66-0	n-Pentane	7.67E-03	7.71E-03	7.71E-08	0.00E+00	0.00E+00	0.00E+00	7.71E-07	7.71E-08	0.00E+00	0.00E+00	0.00E+00
44	109-99-9	Tetrahydrofuran	1.63E-02	6.47E-03	3.95E-07	8.58E-07	6.86E-04	7.61E-14	6.47E-07	3.95E-07	4.29E-08	3.46E-05	7.61E-14
45	110-12-3	5-Methyl-2-hexanone	7.67E-03	6.54E-03	1.17E-07	1.14E-09	1.74E-05	1.99E-15	6.54E-07	1.17E-07	5.68E-11	9.10E-07	1.99E-15
46	110-43-0	2-Heptanone	7.67E-03	6.54E-03	1.17E-07	1.14E-09	1.74E-05	1.99E-15	6.54E-07	1.17E-07	5.68E-11	9.10E-07	1.99E-15
47	110-54-3	n-Hexane	7.67E-03	7.70E-03	7.70E-08	0.00E+00	0.00E+00	0.00E+00	7.70E-07	7.70E-08	0.00E+00	0.00E+00	0.00E+00
48	110-62-3	n-Valeraldehyde	3.49E-02	2.97E-02	5.30E-07	5.16E-09	7.90E-05	9.06E-15	2.97E-06	5.30E-07	2.58E-10	4.14E-06	9.06E-15
49	110-82-7	Cyclohexane	7.67E-03	7.69E-03	7.70E-08	0.00E+00	0.00E+00	1.24E-34	7.69E-07	7.70E-08	0.00E+00	0.00E+00	1.24E-34
50	110-83-8	Cyclohexene	7.67E-03	7.73E-03	7.76E-08	0.00E+00	1.83E-20	2.75E-24	7.73E-07	7.76E-08	0.00E+00	6.47E-21	2.75E-24
51	110-86-1	Pyridine	3.49E-02	3.92E-03	1.09E-06	5.33E-05	3.62E-03	3.99E-13	3.92E-07	1.09E-06	2.67E-06	1.81E-04	3.99E-13
52	111-65-9	n-Octane	7.67E-03	7.71E-03	7.71E-08	0.00E+00	0.00E+00	0.00E+00	7.71E-07	7.71E-08	0.00E+00	0.00E+00	0.00E+00
53	111-76-2	Ethylene glycol monobutyl ether	3.49E-02	9.48E-04	1.45E-06	1.18E-03	5.29E-03	5.82E-13	4.74E-08	1.45E-06	5.89E-05	2.65E-04	5.82E-13
54	111-84-2	n-Nonane	7.67E-03	7.71E-03	7.71E-08	0.00E+00	0.00E+00	0.00E+00	3.86E-07	7.71E-08	0.00E+00	0.00E+00	0.00E+00
55	117-81-7	Bis(2-ethylhexyl)phthalate (DEHP)	3.49E-02	3.67E-04	2.78E-06	9.49E-03	8.50E-03	1.13E-11	5.57E-17	2.78E-12	5.39E-12	6.07E-14	5.64E-17
56	117-84-0	n-Dioctyl phthalate	3.49E-02	2.52E-03	1.42E-06	1.84E-04	4.97E-03	4.89E-12	3.81E-16	1.42E-12	1.05E-13	7.01E-14	2.45E-17
57	118-74-1	Hexachlorobenzene	7.21E-04	7.39E-04	7.92E-09	0.00E+00	8.26E-10	1.22E-19	4.43E-06	7.92E-09	0.00E+00	5.68E-11	1.22E-19
58	120-12-7	Anthracene	3.49E-02	1.62E-02	8.01E-07	8.55E-07	1.11E-03	1.23E-13	3.25E-06	8.01E-07	4.27E-08	5.62E-05	1.23E-13
59	120-82-1	1,2,4-Trichlorobenzene	7.67E-03	7.66E-03	8.33E-08	0.00E+00	1.88E-08	2.66E-18	1.53E-05	8.33E-08	0.00E+00	1.24E-09	2.66E-18
60	120-83-2	2,4-Dichlorophenol	3.49E-02	2.32E-03	1.42E-06	2.55E-04	5.03E-03	3.82E-12	1.39E-05	1.42E-06	1.27E-05	2.52E-04	3.82E-12
61	121-44-8	Triethylamine	7.67E-03	6.54E-03	1.17E-07	1.14E-09	1.74E-05	1.99E-15	6.54E-07	1.17E-07	5.68E-11	9.10E-07	1.99E-15
62	121-69-7	Dimethylaniline	7.67E-03	3.05E-03	1.86E-07	4.05E-07	3.23E-04	3.59E-14	1.53E-07	1.86E-07	2.02E-08	1.63E-05	3.59E-14
63	122-39-4	N,N-Diphenylamine	7.67E-03	3.51E-04	2.82E-07	8.77E-05	1.03E-03	1.14E-13	1.41E-06	2.82E-07	4.39E-06	5.17E-05	1.14E-13
64	123-19-3	4-Heptanone	7.67E-03	3.05E-03	1.86E-07	4.05E-07	3.23E-04	3.59E-14	3.05E-07	1.86E-07	2.02E-08	1.63E-05	3.59E-14
65	123-38-6	n-Propionaldehyde	7.67E-03	5.31E-03	1.43E-07	2.26E-08	7.71E-05	8.67E-15	5.31E-07	1.43E-07	1.13E-09	3.95E-06	8.67E-15
66	123-51-3	3-Methyl-1-butanol	7.67E-03	1.08E-03	2.31E-07	6.90E-06	7.28E-04	8.02E-14	1.08E-07	2.31E-07	3.45E-07	3.65E-05	8.02E-14
67	123-86-4	Acetic acid n-butyl ester	3.49E-02	3.27E-02	4.40E-07	3.39E-12	1.36E-05	1.60E-15	3.27E-06	4.40E-07	1.69E-13	7.31E-07	1.60E-15
68	123-91-1	1,4-Dioxane	2.09E-02	1.39E-03	8.54E-07	1.53E-04	3.02E-03	2.29E-12	1.39E-07	8.54E-07	7.64E-06	1.51E-04	2.29E-12
69	126-73-8	Tributyl phosphate	3.49E-02	1.20E-04	2.52E-06	1.52E-02	6.90E-03	7.59E-13	2.41E-09	2.52E-06	7.60E-04	3.45E-04	7.59E-13
70	126-98-7	2-Methyl-2-propenenitrile (Methacrylonitrile)	7.67E-03	7.19E-03	9.69E-08	7.45E-13	2.99E-06	3.51E-16	7.19E-07	9.69E-08	3.73E-14	1.61E-07	3.51E-16
71	127-18-4	Perchloroethylene (tetrachloroethylene)	7.67E-03	7.72E-03	7.77E-08	0.00E+00	4.81E-14	2.48E-23	7.72E-04	7.77E-08	0.00E+00	1.19E-14	2.48E-23
72	127-19-5	N,N-Dimethylacetamide	7.67E-03	2.19E-06	6.33E-07	5.28E-03	1.51E-03	1.66E-13	1.09E-10	6.33E-07	2.64E-04	7.55E-05	1.66E-13
73	128-37-0	2,6-Bis(tert-butyl)-4-methylphenol	3.49E-02	2.52E-03	1.42E-06	1.84E-04	4.97E-03	4.89E-12	5.03E-08	1.42E-06	9.20E-06	2.49E-04	4.89E-12
74	129-00-0	Pyrene	3.49E-02	5.32E-03	1.41E-06	4.53E-05	4.37E-03	5.85E-12	2.42E-13	1.41E-12	2.58E-14	1.24E-13	2.92E-17
75	1321-64-8	Pentachloronaphthalene	3.49E-02	2.41E-02	6.48E-07	1.03E-07	3.50E-04	3.94E-14	1.10E-12	6.48E-13	5.82E-17	2.67E-14	1.97E-19
76	1321-65-9	Trichloronaphthalene	3.49E-02	2.97E-02	5.30E-07	5.16E-09	7.90E-05	9.06E-15	1.78E-04	5.30E-07	2.58E-10	4.14E-06	9.06E-15
77	132-64-9	Dibenzofuran	3.49E-02	2.97E-02	5.30E-07	5.16E-09	7.90E-05	9.06E-15	1.78E-04	5.30E-07	2.58E-10	4.14E-06	9.06E-15
78	1335-87-1	Hexachloronaphthalene	3.49E-02	2.41E-02	6.48E-07	1.03E-07	3.50E-04	3.94E-14	1.10E-12	6.48E-13	5.82E-17	2.67E-14	1.97E-19
79	1335-88-2	Tetrachloronaphthalene	3.49E-02	2.97E-02	5.30E-07	5.16E-09	7.90E-05	9.06E-15	1.35E-12	5.30E-13	2.93E-18	1.09E-14	4.53E-20
80	1336-36-3	Polychlorinated biphenyls (PCBs)	1.21E-02	3.79E-02	1.32E-06	5.42E-11	6.62E-05	1.14E-13	2.63E-12	1.32E-12	3.08E-20	5.41E-14	5.68E-19
81	141-78-6	Acetic acid ethyl ester (Ethyl acetate)	3.49E-02	2.41E-02	6.48E-07	1.03E-07	3.50E-04	3.94E-14	2.41E-06	6.48E-07	5.13E-09	1.80E-05	3.94E-14
82	141-79-7	4-Methyl-3-penten-2-one	3.49E-02	1.39E-02	8.47E-07	1.84E-06	1.47E-03	1.63E-13	1.39E-06	8.47E-07	9.20E-08	7.42E-05	1.63E-13
83	142-82-5	n-Heptane	7.67E-03	7.70E-03	7.70E-08	0.00E+00	0.00E+00	0.00E+00	7.70E-07	7.70E-08	0.00E+00	0.00E+00	0.00E+00
84	144-62-7	Oxalic acid	3.49E-03	1.58E-08	2.90E-07	2.48E-03	6.83E-04	7.51E-14	7.91E-11	2.90E-07	1.24E-04	3.41E-05	7.51E-14
85	156-60-5	trans-1,2-Dichloroethylene	7.67E-03	7.69E-03	7.78E-08	0.00E+00	1.17E-12	3.90E-22	7.69E-07	7.78E-08	0.00E+00	1.89E-13	3.90E-22
86	1582-09-8	Trifluralin	3.49E-02	2.41E-02	6.48E-07	1.03E-07	3.50E-04	3.94E-14	1.83E-14	6.48E-13	5.82E-17	2.67E-14	1.97E-19
87	1634-04-4	Methyl tert-butyl ether	7.67E-03	7.19E-03	9.69E-08	7.45E-13	2.99E-06	3.51E-16	7.19E-07	9.69E-08	3.73E-14	1.61E-07	3.51E-16
88	1836-75-5	Nitrofen	3.49E-02	3.67E-04	2.78E-06	9.49E-03	8.50E-03	1.13E-11	1.67E-14	2.78E-12	5.39E-12	6.07E-14	5.64E-17
89	189-55-9	Dibenzo[a,i]pyrene	3.49E-02	9.95E-06	2.88E-06	2.40E-02	6.86E-03	7.55E-13	4.52E-16	2.88E-12	1.36E-11	4.34E-14	3.77E-18
90	189-64-0	Dibenzo[a,h]pyrene	3.49E-02	9.95E-06	2.88E-06	2.40E-02	6.86E-03	7.55E-13	4.52E-16	2.88E-12	1.36E-11	4.34E-14	3.77E-18
91	191-24-2	Benzo[g,h,i]perylene	3.49E-02	3.67E-04	2.78E-06	9.49E-03	8.50E-03	1.13E-11	1.67E-14	2.78E-12	5.39E-12	6.07E-14	5.64E-17
92	191-30-0	Benzo[a,l]pyrene	3.49E-02	9.95E-06	2.88E-06	2.40E-02	6.86E-03	7.55E-13	4.52E-16	2.88E-12	1.36E-11	4.34E-14	3.77E-18
93	192-65-4	Dibenzo[a,e]pyrene	3.49E-02	9.95E-06	2.88E-06	2.40E-02	6.86E-03	7.55E-13	4.52E-16	2.88E-12	1.36E-11	4.34E-14	3.77E-18
94	193-39-5	Indeno(1,2,3-cd)pyrene	3.49E-02	3.67E-04	2.78E-06	9.49E-03	8.50E-03	1.13E-11	1.67E-14	2.78E-12	5.39E-12	6.07E-14	5.64E-17
95	205-82-3	Benzo(j)fluoranthene	3.49E-02	1.20E-04	2.52E-06	1.52E-02	6.90E-03	7.59E-13	5.47E-15	2.52E-12	8.64E-12	4.42E-14	3.80E-18
96	205-99-2	Benzo(b)fluoranthene	3.49E-02	3.67E-04	2.78E-06	9.49E-03	8.50E-03	1.13E-11	1.67E-14	2.78E-12	5.39E-12	6.07E-14	5.64E-17
97	206-44-0	Fluoranthene	3.49E-02	5.04E-03	1.45E-06	4.07E-05	4.58E-03	6.11E-12	2.29E-13	1.45E-12	2.31E-14	1.21E-13	3.06E-17
98	207-08-9	Benzo(k)fluoranthene	3.49E-02	3.67E-04	2.78E-06	9.49E-03	8.50E-03	1.13E-11	1.67E-14	2.78E-12	5.39E-12	6.07E-14	5.64E-17
99	208-96-8	Acenaphthylene	3.49E-02	2.41E-02	6.48E-07	1.03E-07	3.50E-04	3.94E-14	1.45E-04	6.48E-07	5.13E-09	1.80E-05	3.94E-14
100	218-01-9	Chrysene	3.49E-02	2.55E-03	1.51E-06	2.40E-04	5.26E-03	7.00E-12	1.16E-13	1.51E-12	1.36E-13	8.40E-14	3.50E-17
101	2234-13-1	Octachloronaphthalene	3.49E-02	2.41E-02	6.48E-07	1.03E-07	3.50E-04	3.94E-14	1.10E-12	6.48E-13	5.82E-17	2.67E-14	1.97E-19
102	224-42-0	Dibenz[a,j]acridine	3.49E-02	1.27E-06	2.89E-06	2.47E-02	6.80E-03	7.48E-13	5.78E-17	2.89E-12	1.40E-11	4.30E-14	3.74E-18
103	226-36-8	Dibenz[a,h]acridine	3.49E-02	1.27E-06	2.89E-06	2.47E-02	6.80E-03	7.48E-13	5.78E-17	2.89E-12	1.40E-11	4.30E-14	3.74E-18
104	2385-85-5	Mirex	3.49E-02	3.48E-02	3.79E-07	0.00E+00	8.55E-08	1.21E-17	2.09E-04	3.79E-07	0.00E+00	5.62E-09	1.21E-17
105	2551-13-7	Trimethyl benzene	7.67E-03	7.70E-03	7.92E-08	0.00E+00	3.39E-10	5.85E-20	3.85E-06	7.92E-08	0.00E+00	2.75E-11	5.85E-20
106	26140-60-3	Terphenyls	3.49E-02	1.70E-02	1.39E-06	9.55E-07	2.45E-03	3.34E-12	7.73E-13	1.39E-12	5.42E-16	2.15E-13	1.67E-17
107	27154-33-2	Trichlorotrifluoroethane	7.67E-03	7.71E-03	7.72E-08	0.00E+00	0.00E+00	2.11E-26	7.71E-04	7.72E-08	0.00E+00	0.00E+00	2.11E-26
108	287-92-3	Cyclopentane	7.67E-03	7.69E-03	7.70E-08	0.00E+00	0.00E+00	1.24E-34	7.69E-07	7.70E-08	0.00E+00	0.00E+00	1.24E-34
109	309-00-2	Aldrin	4.30E-04	2.10E-04	1.72E-08	1.18E-08	3.02E-05	4.12E-14	4.77E-14	1.72E-14	6.69E-18	2.86E-15	2.06E-19

CALCULATION SHEET

BY: E. Berríos
DATE: 05/21/03

PROJECT: WTP
JOB NO. 24590
CALC NO.: 24590-WTP-M4C-FRP-00005
SHEET REV: A
SHEET NO.: 50

	A	B	C	D	E	F	G	H	I	J	K	L	M
1	Table 1 Summary of Organic Constituents Emission Rates for the WTP												
2			Feed	Unabated Streams					Abated Streams				
3	CAS #	COPC	FRP14	PVP01	PJV04	LMP06	HMP06	PJV32	PVP12	PJV11	LVP26	HOP33	PJV34
4			WTP Feed	PT Vessel Vent	PT RFD/PJM	LAW Melter	HLW Melter	HLW PJM/RFD	PT Vessel Vent	PT RFD/PJM	LAW Melter	HLW Melter	HLW PJM/RFD
5			g/sec	g/sec	g/sec	g/sec	g/sec	g/sec	g/sec	g/sec	g/sec	g/sec	g/sec
110	319-84-6	Hexachlorocyclohexane (Lindane) Alpha BHC	1.16E-04	1.68E-05	4.83E-09	1.36E-07	1.53E-05	2.04E-14	1.01E-07	4.83E-09	6.79E-09	7.68E-07	2.04E-14
111	319-85-7	Hexachlorocyclohexane (Lindane) Beta BHC	1.16E-04	1.22E-06	9.38E-09	3.11E-05	2.86E-05	3.80E-14	5.55E-17	9.38E-15	1.77E-14	2.04E-16	1.90E-19
112	319-86-8	Delta-BHC	1.16E-04	1.22E-06	9.25E-09	3.16E-05	2.83E-05	3.76E-14	5.57E-17	9.25E-15	1.80E-14	2.02E-16	1.88E-19
113	3697-24-3	5-Methylchrysene	3.49E-02	2.52E-03	1.42E-06	1.84E-04	4.97E-03	4.89E-12	1.14E-13	1.42E-12	1.05E-13	7.01E-14	2.45E-17
114	3825-26-1	Ammonium perfluorooctanoate	3.49E-02	2.41E-02	6.48E-07	1.03E-07	3.50E-04	3.94E-14	1.10E-12	6.48E-13	5.82E-17	2.67E-14	1.97E-19
115	4170-30-3	2-Butenaldehyde (2-Butenal or Crotonaldehyde)	7.67E-03	8.70E-04	2.39E-07	1.16E-05	7.96E-04	8.77E-14	8.70E-08	2.39E-07	5.80E-07	3.99E-05	8.77E-14
116	465-73-6	Isodrin	2.32E-04	1.12E-03	2.57E-08	1.05E-12	1.29E-06	2.20E-15	6.74E-06	2.57E-08	5.25E-14	8.30E-08	2.20E-15
117	50-00-0	Formaldehyde	7.67E-03	7.67E-05	5.38E-07	2.46E-03	1.67E-03	1.05E-12	7.67E-09	5.38E-07	1.23E-04	8.34E-05	1.05E-12
118	50-29-3	4,4-DDT	2.32E-04	3.36E-05	9.67E-09	2.72E-07	3.05E-05	4.08E-14	1.53E-15	9.67E-15	1.54E-16	8.08E-16	2.04E-19
119	50-32-8	Benzo(a)pyrene	4.42E-04	4.67E-06	3.47E-08	1.22E-04	1.07E-04	1.41E-13	2.12E-16	3.47E-14	6.95E-14	7.62E-16	7.07E-19
120	53-70-3	Dibenzo(a,h)anthracene	5.81E-05	2.01E-07	4.19E-09	2.53E-05	1.15E-05	1.27E-15	9.12E-18	4.19E-15	1.44E-14	7.37E-17	6.33E-21
121	540-59-0	1,2-Dichloroethylene	7.67E-03	7.70E-03	7.92E-08	0.00E+00	3.39E-10	5.85E-20	7.70E-07	7.92E-08	0.00E+00	2.75E-11	5.85E-20
122	540-84-1	2,2,4-Trimethylpentane	7.67E-03	7.71E-03	7.71E-08	0.00E+00	0.00E+00	0.00E+00	7.71E-07	7.71E-08	0.00E+00	0.00E+00	0.00E+00
123	541-73-1	1,3-Dichlorobenzene	7.67E-03	7.70E-03	7.92E-08	0.00E+00	3.39E-10	5.85E-20	7.70E-05	7.92E-08	0.00E+00	2.75E-11	5.85E-20
124	56-23-5	Carbon tetrachloride	7.67E-03	7.73E-03	7.76E-08	0.00E+00	1.83E-20	2.75E-24	1.55E-03	7.76E-08	0.00E+00	6.47E-21	2.75E-24
125	563-80-4	3-Methyl-2-butanone	7.67E-03	5.31E-03	1.43E-07	2.26E-08	7.71E-05	8.67E-15	5.31E-07	1.43E-07	1.13E-09	3.95E-06	8.67E-15
126	56-49-5	3-Methylcholanthrene	3.49E-02	3.51E-02	3.51E-07	0.00E+00	0.00E+00	0.00E+00	1.59E-12	3.51E-13	0.00E+00	0.00E+00	0.00E+00
127	56-55-3	Benzo(a)anthracene	3.49E-02	5.04E-03	1.45E-06	4.07E-05	4.58E-03	6.11E-12	2.29E-13	1.45E-12	2.31E-14	1.21E-13	3.06E-17
128	57-14-7	1,1-Dimethylhydrazine	3.49E-02	4.90E-03	1.05E-06	3.14E-05	3.31E-03	3.65E-13	4.90E-07	1.05E-06	1.57E-06	1.66E-04	3.65E-13
129	58-89-9	gamma-BHC (Lindane)	1.16E-04	8.74E-06	5.22E-09	4.92E-07	1.81E-05	2.41E-14	3.97E-16	5.22E-15	2.79E-16	2.86E-16	1.20E-19
130	58-90-2	2,3,4,6-Tetrachlorophenol	3.49E-02	3.64E-03	1.10E-06	6.24E-05	3.71E-03	4.09E-13	1.09E-04	1.10E-06	3.12E-06	1.86E-04	4.09E-13
131	591-78-6	2-Hexanone	7.67E-03	5.31E-03	1.43E-07	2.26E-08	7.71E-05	8.67E-15	5.31E-06	1.43E-07	1.13E-09	3.95E-06	8.67E-15
132	59-50-7	4-Chloro-3-methylphenol	3.49E-02	2.52E-03	1.42E-06	1.84E-04	4.97E-03	4.89E-12	2.86E-13	1.42E-12	1.05E-13	7.01E-14	2.45E-17
133	59-89-2	N-Nitrosomorpholine	3.49E-02	2.15E-05	2.82E-06	2.28E-02	6.86E-03	7.54E-13	8.13E-18	2.82E-06	1.14E-03	3.43E-04	7.54E-13
134	602-87-9	5-Nitroacenaphthene	3.49E-02	9.48E-04	1.45E-06	1.18E-03	5.29E-03	5.82E-13	4.31E-14	1.45E-12	6.69E-13	3.93E-14	2.91E-18
135	60-29-7	Ethyl ether	3.49E-02	3.48E-02	3.79E-07	0.00E+00	8.55E-08	1.21E-17	3.48E-06	3.79E-07	0.00E+00	5.62E-09	1.21E-17
136	603-34-9	Triphenylamine	3.49E-02	2.37E-03	1.18E-06	1.65E-04	4.22E-03	4.65E-13	1.42E-05	1.18E-06	8.23E-06	2.11E-04	4.65E-13
137	60-34-4	Methylhydrazine	7.67E-03	5.11E-04	3.13E-07	5.60E-05	1.11E-03	8.41E-13	5.11E-08	3.13E-07	2.80E-06	5.54E-05	8.41E-13
138	60-35-5	Acetamide	7.67E-03	2.19E-06	6.33E-07	5.28E-03	1.51E-03	1.66E-13	1.09E-10	6.33E-07	2.64E-04	7.55E-05	1.66E-13
139	60-57-1	Dieldrin	2.32E-04	3.18E-05	9.95E-09	2.41E-07	3.19E-05	4.26E-14	1.44E-15	9.95E-15	1.37E-16	7.88E-16	2.13E-19
140	621-64-7	Di-n-Propylnitrosamine (N-Nitroso-di-n-propylamine)	3.49E-02	2.32E-03	1.42E-06	2.55E-04	5.03E-03	3.82E-12	1.16E-07	1.42E-06	1.27E-05	2.52E-04	3.82E-12
141	624-83-9	Methyl isocyanate	7.67E-03	7.66E-03	8.33E-08	0.00E+00	1.88E-08	2.66E-18	7.66E-06	8.33E-08	0.00E+00	1.24E-09	2.66E-18
142	627-13-4	Nitric acid, propyl ester	3.49E-02	3.48E-02	3.79E-07	0.00E+00	8.55E-08	1.21E-17	3.48E-06	3.79E-07	0.00E+00	5.62E-09	1.21E-17
143	62-75-9	N-Nitroso-N,N-dimethylamine (Dimethylnitrosamine)	6.51E-02	1.77E-03	2.71E-06	2.20E-03	9.87E-03	1.09E-12	8.85E-08	2.71E-06	1.10E-04	4.94E-04	1.09E-12
144	630-20-6	1,1,1,2-Tetrachloroethane	7.67E-03	7.86E-03	8.43E-08	0.00E+00	8.79E-09	1.30E-18	7.86E-04	8.43E-08	0.00E+00	6.05E-10	1.30E-18
145	64-17-5	Ethyl alcohol	7.67E-03	5.11E-04	3.13E-07	5.60E-05	1.11E-03	8.41E-13	5.11E-08	3.13E-07	2.80E-06	5.54E-05	8.41E-13
146	64-18-6	Formic acid	3.49E-02	1.20E-04	2.52E-06	1.52E-02	6.90E-03	7.59E-13	1.20E-08	2.52E-06	7.60E-04	3.45E-04	7.59E-13
147	64-19-7	Acetic acid	3.49E-02	2.15E-05	2.82E-06	2.28E-02	6.86E-03	7.54E-13	2.15E-09	2.82E-06	1.14E-03	3.43E-04	7.54E-13
148	67-56-1	Methyl alcohol (Methanol)	7.67E-03	5.11E-04	3.13E-07	5.60E-05	1.11E-03	8.41E-13	5.11E-08	3.13E-07	2.80E-06	5.54E-05	8.41E-13
149	67-63-0	2-Propyl alcohol (Isopropanol; Propan-2-01)	7.67E-03	8.63E-04	2.39E-07	1.17E-05	7.96E-04	8.78E-14	8.63E-08	2.39E-07	5.87E-07	3.99E-05	8.78E-14
150	67-64-1	2-Propanone (Acetone)	4.18E-02	1.66E-02	1.02E-06	2.21E-06	1.76E-03	1.96E-13	1.66E-06	1.02E-06	1.10E-07	8.91E-05	1.96E-13
151	67-66-3	Chloroform	7.67E-03	7.70E-03	7.92E-08	0.00E+00	3.39E-10	5.85E-20	3.85E-03	7.92E-08	0.00E+00	2.75E-11	5.85E-20
152	67-72-1	Hexachloroethane	3.49E-02	3.50E-02	3.60E-07	0.00E+00	1.54E-09	2.66E-19	7.00E-04	3.60E-07	0.00E+00	1.25E-10	2.66E-19
153	684-16-2	Hexafluoroacetone	7.67E-03	7.70E-03	7.92E-08	0.00E+00	3.39E-10	5.85E-20	7.70E-03	7.92E-08	0.00E+00	2.75E-11	5.85E-20
154	71-23-8	n-Propyl alcohol	7.67E-03	8.63E-04	2.39E-07	1.17E-05	7.96E-04	8.78E-14	8.63E-08	2.39E-07	5.87E-07	3.99E-05	8.78E-14
155	71-36-3	n-Butyl alcohol	7.67E-03	8.63E-04	2.39E-07	1.17E-05	7.96E-04	8.78E-14	8.63E-08	2.39E-07	5.87E-07	3.99E-05	8.78E-14
156	71-43-2	Benzene	7.67E-03	7.69E-03	7.85E-08	0.00E+00	2.73E-11	6.36E-21	7.69E-05	7.85E-08	0.00E+00	3.04E-12	6.36E-21
157	71-55-6	Methyl chloroform (1,1,1-Trichloroethane)	7.67E-03	7.72E-03	7.77E-08	0.00E+00	4.81E-14	2.48E-23	7.72E-06	7.77E-08	0.00E+00	1.19E-14	2.48E-23
158	72-20-8	Endrin	2.32E-04	1.68E-05	9.45E-09	1.23E-06	3.31E-05	3.26E-14	7.62E-16	9.45E-15	6.97E-16	4.68E-16	1.63E-19
159	72-43-5	Methoxychlor	1.16E-03	4.01E-06	8.39E-08	5.07E-04	2.30E-04	2.53E-14	1.82E-16	8.39E-14	2.88E-13	1.47E-15	1.27E-19
160	72-54-8	4,4-DDD	2.32E-04	1.68E-05	9.45E-09	1.23E-06	3.31E-05	3.26E-14	7.62E-16	9.45E-15	6.97E-16	4.68E-16	1.63E-19
161	72-55-9	4,4-DDE	2.32E-04	1.13E-04	9.28E-09	6.36E-09	1.63E-05	2.23E-14	5.15E-15	9.28E-15	3.62E-18	1.44E-15	1.11E-19
162	74-83-9	Bromomethane (Methyl bromide)	7.67E-03	7.70E-03	7.92E-08	0.00E+00	3.39E-10	5.85E-20	7.70E-06	7.92E-08	0.00E+00	2.75E-11	5.85E-20
163	74-87-3	Chloromethane (Methyl chloride)	7.67E-03	7.69E-03	7.78E-08	0.00E+00	1.17E-12	3.90E-22	3.85E-04	7.78E-08	0.00E+00	1.89E-13	3.90E-22
164	74-97-5	Bromochloromethane	7.67E-03	7.66E-03	8.33E-08	0.00E+00	1.88E-08	2.66E-18	3.83E-03	8.33E-08	0.00E+00	1.24E-09	2.66E-18
165	74-99-7	Methylacetylene	3.49E-02	3.50E-02	3.54E-07	0.00E+00	5.34E-12	1.77E-21	3.50E-06	3.54E-07	0.00E+00	8.57E-13	1.77E-21
166	75-00-3	Chloroethane	7.67E-03	7.69E-03	7.78E-08	0.00E+00	1.17E-12	3.90E-22	7.69E-06	7.78E-08	0.00E+00	1.89E-13	3.90E-22
167	75-01-4	Vinyl chloride (1-Chloroethene)	3.49E-02	3.51E-02	3.53E-07	0.00E+00	8.32E-20	1.25E-23	3.51E-06	3.53E-07	0.00E+00	2.94E-20	1.25E-23
168	75-05-8	Acetonitrile	1.09E-02	3.60E-03	2.80E-07	8.85E-07	5.74E-04	6.35E-14	3.60E-06	2.80E-07	4.42E-08	2.89E-05	6.35E-14
169	75-07-0	Acetaldehyde	3.49E-02	1.39E-02	8.47E-07	1.84E-06	1.47E-03	1.63E-13	1.39E-06	8.47E-07	9.20E-08	7.42E-05	1.63E-13
170	75-09-2	Dichloromethane (Methylene chloride)	7.67E-03	7.70E-03	7.92E-08	0.00E+00	3.39E-10	5.85E-20	3.85E-04	7.92E-08	0.00E+00	2.75E-11	5.85E-20
171	75-12-7	Formamide	3.49E-02	1.27E-06	2.89E-06	2.47E-02	6.80E-03	7.48E-13	1.27E-10	2.89E-06	1.24E-03	3.40E-04	7.48E-13
172	75-15-0	Carbon disulfide	7.67E-03	7.69E-03	7.78E-08	0.00E+00	1.17E-12	3.90E-22	7.69E-07	7.78E-08	0.00E+00	1.89E-13	3.90E-22
173	75-21-8	Ethylene oxide (Oxirane)	7.67E-03	6.54E-03	1.17E-07	1.14E-09	1.74E-05	1.99E-15	6.54E-07	1.17E-07	5.68E-11	9.10E-07	1.99E-15
174	75-27-4	Bromodichloromethane	7.67E-03	7.86E-03	8.43E-08	0.00E+00	8.79E-09	1.30E-18	1.57E-03	8.43E-08	0.00E+00	6.05E-10	1.30E-18
175	75-34-3	1,1-Dichloroethane	7.67E-03	7.70E-03	7.92E-08	0.00E+00	3.39E-10	5.85E-20	7.70E-07	7.92E-08	0.00E+00	2.75E-11	5.85E-20
176	75-35-4	1,1-Dichloroethene (Vinylidene chloride)	7.67E-03	7.73E-03	7.76E-08	0.00E+00	1.83E-20	2.75E-24	7.73E-07	7.76E-08	0.00E+00	6.47E-21	2.75E-24
177	75-43-4	Dichlorofluoromethane	7.67E-03	7.69E-03	7.78E-08	0.00E+00	1.17E-12	3.90E-22	7.69E-06	7.78E-08	0.00E+00	1.89E-13	3.90E-22
178	75-45-6	Chlorodifluoromethane	7.67E-03	7.73E-03	7.76E-08	0.00E+00	1.83E-20	2.75E-24	1.55E-04	7.76E-08	0.00E+00	6.47E-21	2.75E-24
179	75-50-3	Trimethylamine	7.67E-03	5.31E-03	1.43E-07	2.26E-08	7.71E-05	8.67E-15	5.31E-07	1.43E-07	1.13E-09	3.95E-06	8.67E-15
180	75-52-5	Nitromethane	3.49E-02	1.39E-02	8.47E-07	1.84E-06	1.47E-03	1.63E-13	1.39E-06	8.47E-07	9.20E-08	7.42E-05	1.63E-13
181	75-55-8	2-Methylaziridine	3.49E-02	3.92E-03	1.09E-06	5.33E-05	3.62E-03	3.99E-13	3.92E-07	1.09E-06	2.67E-06	1.81E-04	3.99E-13
182	75-61-6	Difluorodibromomethane	7.67E-03	7.73E-03	7.76E-08	0.00E+00	1.83E-20	2.75E-24	7.73E-03	7.76E-08	0.00E+00	6.47E-21	2.75E-24
183	75-63-8	Trifluorobromomethane	7.67E-03	7.68E-03	7.69E-08	0.00E+00	0.00E+00	0.00E+00	7.68E-03	7.69E-08	0.00E+00	0.00E+00	0.00E+00
184	75-65-0	2-Methyl-2-propanol	7.67E-03	8.63E-04	2.39E-07	1.17E-05	7.96E-04	8.78E-14	8.63E-08	2.39E-07	5.87E-07	3.99E-05	8.78E-14
185	75-69-4	Trichlorofluoromethane	7.67E-03	7.71E-03	7.72E-08	0.00E+00	0.00E+00	2.11E-26	7.71E-03	7.72E-08	0.00E+00	0.00E+00	2.11E-26
186	75-71-8	Dichlorodifluoromethane	7.67E-03	7.68E-03	7.69E-08	0.00E+00	0.00E+00	0.00E+00	7.68E-03	7.69E-08	0.00E+00	0.00E+00	0.00E+00
187	75-99-0	2,2-Dichloropropionic acid	3.49E-02	2.15E-05	2.82E-06	2.28E-02	6.86E-03	7.54E-13	1.07E-07	2.82E-06	1.14E-03	3.43E-04	7.54E-13
188	76-03-9	Trichloroacetic acid	7.67E-03	2.19E-06	6.33E-07	5.28E-03	1.51E-03	1.66E-13	4.38E-08	6.33E-07	2.64E-04	7.55E-05	1.66E-13
189	76-11-9	1,1,1,2-Tetrachloro-2,2-difluoroethane	3.49E-02	3.50E-02	3.50E-07	0.00E+00	0.00E+00	5.66E-34	6.99E-04	3.50E-07	0.00E+00	0.00E+00	5.66E-34
190	76-12-0	1,1,2,2-Tetrachloro-1,2-difluoroethane	3.49E-02	3.50E-02	3.51E-07	0.00E+00	0.00E+00	9.60E-26	7.01E-04	3.51E-07	0.00E+00	0.00E+00	9.60E-26
191	76-13-1	1,2,2-Trichloro-1,1,2-trifluoroethane (Freon 113)	7.67E-03	7.68E-03	7.69E-08	0.00E+00	0.00E+00	0.00E+00	1.92E-04	7.69E-08	0.00E+00	0.00E+00	0.00E+00
192	76-14-2	1,2-Dichloro-1,1,2,2-tetrafluoroethane	7.67E-03	7.71E-03	7.71E-08	0.00E+00	0.00E+00	0.00E+00	7.71E-03	7.71E-08	0.00E+00	0.00E+00	0.00E+00
193	76-15-3	Chloropentafluoroethane	7.67E-03	7.70E-03	7.70E-08	0.00E+00	0.00E+00	0.00E+00	7.70E-03	7.70E-08	0.00E+00	4.24E-30	0.00E+00
194	76-44-8	Heptachlor	7.56E-04	6.72E-04	1.03E-08	0.00E+00	6.62E-07	7.72E-17	2.02E-05	1.03E-08	0.00E+00	3.53E-08	7.72E-17
195	78-83-1	2-Methylpropyl alcohol (Isobutyl alcohol)	3.49E-02	3.92E-03	1.09E-06	5.33E-05	3.62E-03	3.99E-13	3.92E-07	1.09E-06	2.67E-06	1.81E-04	3.99E-13
196	78-87-5	1,2-Dichloropropane	7.67E-03	7.70E-03	7.92E-08	0.00E+00	3.39E-10	5.85E-20	7.70E-06	7.92E-08	0.00E+00	2.75E-11	5.85E-20
197	78-92-2	1-Methylpropyl alcohol (2-Butanol)	7.67E-03	8.63E-04	2.39E-07	1.17E-05	7.96E-04	8.78E-14	8.63E-08	2.39E-07	5.87E-07	3.99E-05	8.78E-14
198	78-93-3	Methyl ethyl ketone (MEK, 2-Butanone)	7.67E-03	3.05E-03	1.86E-07	4.05E-07	3.23E-04	3.59E-14	3.05E-06	1.86E-07	2.02E-08	1.63E-05	3.59E-14
199	79-00-5	1,1,2-Trichloroethane	7.67E-03	7.66E-03	8.33E-08	0.00E+00	1.88E-08	2.66E-18	7.66E-07	8.33E-08	0.00E+00	1.24E-09	2.66E-18
200	79-01-6	Trichloroethylene	7.67E-03	7.68E-03	7.78E-08	0.00E+00	1.33E-12	4.37E-22	7.68E-07	7.78E-08	0.00E+00	2.11E-13	4.37E-22
201	79-09-4	Propionic acid	3.49E-02	3.49E-04	2.44E-06	1.12E-02	7.58E-03	4.77E-12	3.49E-08	2.44E-06	5.58E-04	3.79E-04	4.77E-12
202	79-10-7	2-Propenoic acid	3.49E-02	3.49E-04	2.44E-06	1.12E-02	7.58E-03	4.77E-12	3.49E-08	2.44E-06	5.58E-04	3.79E-04	4.77E-12
203	79-20-9	Methyl acetate	3.49E-02	2.41E-02	6.48E-07	1.03E-07	3.50E-04	3.94E-14	2.41E-06	6.48E-07	5.13E-09	1.80E-05	3.94E-14
204	79-34-5	1,1,2,2-Tetrachloroethane	7.67E-03	7.19E-03	9.69E-08	7.45E-13	2.99E-06	3.51E-16	7.19E-04	9.69E-08	3.73E-14	1.61E-07	3.51E-16
205	8001-35-2	Toxaphene	2.67E-04	2.34E-05	1.20E-08	8.46E-07	4.11E-05	5.47E-14	1.06E-15	1.20E-14	4.81E-16	7.14E-16	2.73E-19
206	82-68-8	Pentachloronitrobenzene (PCBN or quintobenzene)	3.49E-02	1.39E-02	8.47E-07	1.84E-06	1.47E-03	1.63E-13	8.32E-05	8.47E-07	9.20E-08	7.42E-05	1.63E-13
207	83-32-9	Acenaphthene	3.49E-02	2.97E-02	5.30E-07	5.16E-09	7.90E-05	9.06E-15	1.78E-04	5.30E-07	2.58E-10	4.14E-06	9.06E-15
208	84-66-2	Diethyl phthalate	3.49E-02	3.97E-04	1.92E-06	5.30E-03	6.33E-03	6.97E-13	7.94E-09	1.92E-06	2.65E-04	3.17E-04	6.97E-13
209	84-74-2	Dibutyl phthalate	3.49E-02	1.07E-03	1.89E-06	1.84E-03	6.66E-03	8.85E-12	1.63E-16	1.89E-12	1.04E-12	6.43E-14	4.42E-17
210	85-01-8	Phenanthrene	3.49E-02	1.39E-02	8.47E-07	1.84E-06	1.47E-03	1.63E-13	8.32E-05	8.47E-07	9.20E-08	7.42E-05	1.63E-13
211	85-68-7	Butylbenzyl phthalate	3.49E-02	1.07E-03	1.89E-06	1.84E-03	6.66E-03	8.85E-12	1.63E-16	1.89E-12	1.04E-12	6.43E-14	4.42E-17
212	86-73-7	Fluorene	3.49E-02	2.41E-02	6.48E-07	1.03E-07	3.50E-04	3.94E-14	1.10E-12	6.48E-13	5.82E-17	2.67E-14	1.97E-19
213	87-68-3	Hexachlorobutadiene	7.67E-03	7.70E-03	7.79E-08	0.00E+00	1.02E-12	3.44E-22	3.08E-05	7.79E-08	0.00E+00	1.67E-13	3.44E-22

BY: E. Berrios
DATE: 05/21/03

PROJECT: WTP
JOB NO.: 24590
CALC NO. 24590-WTP-M4C-FRP-00005
SHEET REV: A
SHEET NO.: 51

	A	B	C	D	E	F	G	H	I	J	K	L	M
1	Table 1 Summary of Organic Constituents Emission Rates for the WTP												
2	CAS #	COPC	Feed	Unabated Streams					Abated Streams				
3			FRP14	PVP01	PJV04	LMP06	HMP06	PJV32	PVP12	PJV11	LVP26	HOP33	PJV34
4			WTP Feed	PT Vessel Vent	PT RFD/PJM	LAW Melter	HLW Melter	HLW PJM/RFD	PT Vessel Vent	PT RFD/PJM	LAW Melter	HLW Melter	HLW PJM/RFD
5			g/sec	g/sec	g/sec	g/sec	g/sec	g/sec	g/sec	g/sec	g/sec	g/sec	g/sec
214	87-86-5	Pentachlorophenol	3.49E-02	2.15E-05	2.82E-06	2.28E-02	6.86E-03	7.54E-13	1.29E-07	2.82E-06	1.14E-03	3.43E-04	7.54E-13
215	88-06-2	2,4,6-Trichlorophenol	3.49E-02	2.32E-03	1.42E-06	2.55E-04	5.03E-03	3.82E-12	1.39E-05	1.42E-06	1.27E-05	2.52E-04	3.82E-12
216	88-72-2	2-Nitrotoluene	7.67E-03	1.08E-03	2.31E-07	6.90E-06	7.28E-04	8.02E-14	5.39E-08	2.31E-07	3.45E-07	3.65E-05	8.02E-14
217	88-75-5	2-Nitrophenol	3.49E-02	4.90E-03	1.05E-06	3.14E-05	3.31E-03	3.65E-13	7.35E-05	1.05E-06	1.57E-06	1.66E-04	3.65E-13
218	88-85-7	2-sec-Butyl-4,6-dinitrophenol (Dinoseb)	3.49E-02	4.08E-04	3.20E-06	1.88E-02	9.69E-03	1.29E-11	1.86E-14	3.20E-12	1.07E-11	6.94E-14	6.43E-17
219	88-89-1	Picric acid	3.49E-02	6.84E-08	1.03E-05	3.31E-01	8.46E-03	1.12E-11	1.04E-20	1.03E-11	1.88E-10	5.34E-14	5.61E-17
220	91-20-3	Naphthalene	1.16E-03	1.10E-03	1.45E-08	0.00E+00	2.77E-07	3.32E-17	5.48E-06	1.45E-08	0.00E+00	1.52E-08	3.32E-17
221	91-22-5	Quinoline	3.49E-02	9.48E-04	1.45E-06	1.18E-03	5.29E-03	5.82E-13	4.74E-08	1.45E-06	5.89E-05	2.65E-04	5.82E-13
222	91-58-7	2-Chloronapthalene	3.49E-02	3.27E-02	4.40E-07	3.39E-12	1.36E-05	1.60E-15	1.96E-04	4.40E-07	1.69E-13	7.31E-07	1.60E-15
223	92-52-4	1,1'-Biphenyl	3.49E-02	3.27E-02	4.40E-07	3.39E-12	1.36E-05	1.60E-15	6.53E-06	4.40E-07	1.69E-13	7.31E-07	1.60E-15
224	92-93-3	4-Nitrobiphenyl	3.49E-02	2.32E-03	1.42E-06	2.55E-04	5.03E-03	3.82E-12	1.06E-13	1.42E-12	1.45E-13	6.63E-14	1.91E-17
225	93-72-1	Silvex (2,4,5-TP)	3.49E-02	9.95E-06	2.88E-06	2.40E-02	6.86E-03	7.55E-13	4.52E-16	2.88E-12	1.36E-11	4.34E-14	3.77E-18
226	93-76-5	2,4,5-T	3.49E-02	9.95E-06	2.88E-06	2.40E-02	6.86E-03	7.55E-13	4.52E-16	2.88E-12	1.36E-11	4.34E-14	3.77E-18
227	94-75-7	2,4-D and esters (160C typed)	3.49E-02	2.15E-05	2.82E-06	2.28E-02	6.86E-03	7.54E-13	1.29E-07	2.82E-06	1.14E-03	3.43E-04	7.54E-13
228	95-13-6	Indene	3.49E-02	3.57E-02	3.83E-07	0.00E+00	4.00E-08	5.90E-18	1.79E-05	3.83E-07	0.00E+00	2.75E-09	5.90E-18
229	95-47-6	o-Xylene	7.67E-03	7.70E-03	7.92E-08	0.00E+00	3.39E-10	5.85E-20	7.70E-07	7.92E-08	0.00E+00	2.75E-11	5.85E-20
230	95-48-7	o-Cresol (2-Methylphenol)	7.67E-03	2.09E-04	3.20E-07	2.59E-04	1.16E-03	1.28E-13	1.04E-07	3.20E-07	1.30E-05	5.82E-05	1.28E-13
231	95-49-8	2-Chlorotoluene	3.49E-02	3.50E-02	3.60E-07	0.00E+00	1.54E-09	2.66E-19	1.75E-06	3.60E-07	0.00E+00	1.25E-10	2.66E-19
232	95-50-1	o-Dichlorobenzene (1,2-Dichlorobenzene)	7.67E-03	7.86E-03	8.43E-08	0.00E+00	8.79E-09	1.30E-18	7.86E-05	8.43E-08	0.00E+00	6.05E-10	1.30E-18
233	95-57-8	2-Chlorophenol	3.49E-02	3.92E-03	1.09E-06	5.33E-05	3.62E-03	3.99E-13	1.96E-07	1.09E-06	2.67E-06	1.81E-04	3.99E-13
234	95-95-4	2,4,5-Trichlorophenol	3.49E-02	9.48E-04	1.45E-06	1.18E-03	5.29E-03	5.82E-13	5.69E-06	1.45E-06	5.89E-05	2.65E-04	5.82E-13
235	96-22-0	3-Pentanone	7.67E-03	5.31E-03	1.43E-07	2.26E-08	7.71E-05	8.67E-15	5.31E-07	1.43E-07	1.13E-09	3.95E-06	8.67E-15
236	96-69-5	Bis(3-tert-butyl-4-hydroxy-6-methyl-phenyl)sulfide	3.49E-02	3.50E-02	3.60E-07	0.00E+00	1.54E-09	2.66E-19	1.59E-12	3.60E-13	0.00E+00	2.69E-18	1.33E-24
237	98-51-1	p-tert-Butyltoluene	3.49E-02	3.51E-02	3.53E-07	0.00E+00	2.19E-13	1.13E-22	1.75E-06	3.53E-07	0.00E+00	5.40E-14	1.13E-22
238	98-82-8	Cumene	3.49E-02	3.50E-02	3.54E-07	0.00E+00	5.34E-12	1.77E-21	1.75E-06	3.54E-07	0.00E+00	8.57E-13	1.77E-21
239	98-83-9	alpha-Methylstyrene	7.67E-03	7.70E-03	7.92E-08	0.00E+00	3.39E-10	5.85E-20	3.85E-05	7.92E-08	0.00E+00	2.75E-11	5.85E-20
240	98-86-2	Acetophenone	3.49E-02	4.18E-03	1.07E-06	4.49E-05	3.53E-03	3.89E-13	2.09E-05	1.07E-06	2.25E-06	1.77E-04	3.89E-13
241	98-95-3	Nitrobenzene	3.49E-02	4.90E-03	1.05E-06	3.14E-05	3.31E-03	3.65E-13	2.45E-07	1.05E-06	1.57E-06	1.66E-04	3.65E-13
242	Coplanar PCB's												
243	31508-00-6	2,3',4,4',5-Pentachlorobiphenyl (PBC 118)	8.72E-06	4.18E-05	9.56E-10	3.91E-14	4.78E-08	8.20E-17	1.90E-15	9.56E-16	2.22E-23	3.90E-17	4.10E-22
244	32598-13-3	3,3',4,4'-Tetrachlorobiphenyl (TCB)	8.72E-06	4.18E-05	9.56E-10	3.91E-14	4.78E-08	8.20E-17	1.90E-15	9.56E-16	2.22E-23	3.90E-17	4.10E-22
245	32598-14-4	2,3,3',4,4'-Pentachlorobiphenyl (PCB 105)	8.72E-06	4.18E-05	9.56E-10	3.91E-14	4.78E-08	8.20E-17	1.90E-15	9.56E-16	2.22E-23	3.90E-17	4.10E-22
246	32774-16-6	3,3',4,4',5,5'-Hexachlorobiphenyl	8.72E-06	4.18E-05	9.56E-10	3.91E-14	4.78E-08	8.20E-17	1.90E-15	9.56E-16	2.22E-23	3.90E-17	4.10E-22
247	35065-29-3	2,2',3,4,4',5,5'-Heptachlorobiphenyl	8.72E-06	4.18E-05	9.56E-10	3.91E-14	4.78E-08	8.20E-17	1.90E-15	9.56E-16	2.22E-23	3.90E-17	4.10E-22
248	35065-30-6	2,2',3,3',4,4',5-Heptachlorobiphenyl	8.72E-06	4.18E-05	9.56E-10	3.91E-14	4.78E-08	8.20E-17	1.90E-15	9.56E-16	2.22E-23	3.90E-17	4.10E-22
249	38380-08-4	2,3,3',4,4',5-Hexachlorobiphenyl (PCB 157)	8.72E-06	4.18E-05	9.56E-10	3.91E-14	4.78E-08	8.20E-17	1.90E-15	9.56E-16	2.22E-23	3.90E-17	4.10E-22
250	39635-31-9	2,3,3',4,4',5,5'-Heptachlorobiphenyl	8.72E-06	4.18E-05	9.56E-10	3.91E-14	4.78E-08	8.20E-17	1.90E-15	9.56E-16	2.22E-23	3.90E-17	4.10E-22
251	52663-72-6	2,3',4,4',5,5'-Hexachlorobiphenyl	8.72E-06	4.18E-05	9.56E-10	3.91E-14	4.78E-08	8.20E-17	1.90E-15	9.56E-16	2.22E-23	3.90E-17	4.10E-22
252	57465-28-8	3,3',4,4',5-Pentachlorobiphenyl	8.72E-06	4.18E-05	9.56E-10	3.91E-14	4.78E-08	8.20E-17	1.90E-15	9.56E-16	2.22E-23	3.90E-17	4.10E-22
253	65510-44-3	2',3,4,4',5-Pentachlorobiphenyl	8.72E-06	4.18E-05	9.56E-10	3.91E-14	4.78E-08	8.20E-17	1.90E-15	9.56E-16	2.22E-23	3.90E-17	4.10E-22
254	69782-90-7	2,3,3',4,4',5'-Hexachlorobiphenyl	8.72E-06	4.18E-05	9.56E-10	3.91E-14	4.78E-08	8.20E-17	1.90E-15	9.56E-16	2.22E-23	3.90E-17	4.10E-22
255	70362-50-4	3,4,4',5-Tetrachlorobiphenyl	8.72E-06	4.18E-05	9.56E-10	3.91E-14	4.78E-08	8.20E-17	1.90E-15	9.56E-16	2.22E-23	3.90E-17	4.10E-22
256	74472-37-0	2,3,4,4',5-Pentachlorobiphenyl	8.72E-06	4.18E-05	9.56E-10	3.91E-14	4.78E-08	8.20E-17	1.90E-15	9.56E-16	2.22E-23	3.90E-17	4.10E-22

9 References

Project Documents

CCN#044663, *Updated Basis for the WTP's Emissions Profile*

CCN#053500, *HLW and LAW Vitrification Decontamination Factors for Air Emissions Modeling*

CCN# 057415, *Phase Determination for COPCs Potentially Emitted from the Hanford Tank Waste Treatment and Immobilization Plant (WTP)*

RPT-24590-EN00003, Rev 0, *RPP-WTP Waste Feed Assessment*

RPT-W375-ES00001, Rev 1, *Integrated Emissions Baseline Report for the River Protection Project Waste Treatment Plant*

24590-WTP-MRQ-P0-03-054, *Emissions Vitrification Maximum Case Run with Updated Organic Parameters,* Rev 0

24590-WTP-RPT-ENV-01-004, *Best Available Radionuclide Control Technology Analysis for the WTP*, Rev 1

24590-WTP-RPT-PT-02-005, *Flowsheet Bases, Assumptions, and Requirements*, Rev 1

10 Attachments

NA

Appendix A Stream Reports

Table A-1 PJV32 Stream Report

River Protection Project - Waste Treatment Plant

Stream Number: PJV32
Stream Name: HLW pulse ventilation header offgas
Configuration: 0
0
Run Data File: H:\Working Folder 11 (Vishal)\Emissions_Case2_Run4_SubEm\ARQ_03_054_real_Streams.csv
Run Data / Time: 4/16/2003 - 6:40:10 AM

Stream Properties Variable	Value	Units
Density	1.16E-03	g/cm³
Enthalpy	-8.56E+05	BTU/hr
Mass Flow	2.32E+04	Lb/hr
	5.57E+05	Lb/day
Volumetric Flow	4.00E+04	GPM
Molar Flow	8.08E+02	Lbmol/hr
Volumetric Flow	5.34E+03	(ft³)/min
Molecular Weight	2.87E+01	Lb/Lbmol
Pressure	1.00E+03	mbar
Temperature	2.50E+01	C
Viscosity	1.83E-02	cP
Na Molarity	0.00E+00	mol/L
pH	#NUM!	pH
Total TRU	6.32E-16	Ci/L
Total Activity	1.21E-13	Ci/L

Gaseous Components (1) Component	mol/L	Lb/day	Mt/day
CO	2.38E-32	3.20E-25	1.45421E-28
CO_2	6.89E-17	1.46E-09	6.62474E-13
H_2O	4.10E-04	3.54E-03	1.61081113
NO	1.94E-37	2.86E-30	1.27195E-33
NO_2	2.32E-37	5.12E-30	2.32576E-33
N_2	2.16E-02	4.25E-05	193.0829435
O_2	8.39E-03	1.29E-05	58.61857611
SO_2	1.84E-38	5.66E-31	2.57271E-34
NH_3	1.39E-15	1.14E-08	5.17226E-12
HNO_3	6.35E-24	1.92E-16	8.73531E-20
HCl	0.00E+00	0.00E+00	0
HF	5.29E-35	5.09E-28	2.31162E-31

(1) All radionuclides in gaseous streams are assumed to exist as solid particulate.

Component	Aqueous Components mol/L	Lb/gal	Lb/day	Solid Components Lb/day	Total Components Lb/day	Mt/day	g/sec
Total	0.00E+00	0.00E+00	0.00E+00	1.27E-05	1.27E-05	5.8E-09	6.69188E-08
Ag^+	0.00E+00	0.00E+00	0.00E+00	1.96E-09	1.96E-09	8.9E-13	1.0308E-11
Al^{+3}	0.00E+00	0.00E+00	0.00E+00	5.91E-08	5.91E-08	2.7E-11	3.10775E-10
As^{+5}	0.00E+00	0.00E+00	0.00E+00	8.34E-06	8.34E-06	3.8E-09	4.38998E-08
B^{+3}	0.00E+00	0.00E+00	0.00E+00	1.94E-08	1.94E-08	8.8E-12	1.02324E-10
Ba^{+2}	0.00E+00	0.00E+00	0.00E+00	1.20E-08	1.20E-08	5.5E-12	6.33285E-11
Bi^{+3}	0.00E+00	0.00E+00	0.00E+00	7.62E-09	7.62E-09	3.5E-12	4.0112E-11
$Cr_2O_4^{-2}$	0.00E+00	0.00E+00	0.00E+00	1.25E-07	1.25E-07	5.7E-11	6.57424E-10
Ca^{+2}	0.00E+00	0.00E+00	0.00E+00	2.51E-08	2.51E-08	1.1E-11	1.31912E-10
Cd^{+2}	0.00E+00	0.00E+00	0.00E+00	3.00E-08	3.00E-08	1.4E-11	1.5789E-10
Ce^{+3}	0.00E+00	0.00E+00	0.00E+00	2.39E-09	2.39E-09	1.1E-12	1.25628E-11
Cl^-	0.00E+00	0.00E+00	0.00E+00	2.31E-08	2.31E-08	1.1E-11	1.2169E-10
CO_3^{-2}	0.00E+00	0.00E+00	0.00E+00	9.71E-08	9.71E-08	4.4E-11	5.10778E-10
Cr^{+3}	0.00E+00	0.00E+00	0.00E+00	5.17E-09	5.17E-09	2.4E-12	2.72013E-11
Cu^{+2}	0.00E+00	0.00E+00	0.00E+00	1.25E-09	1.25E-09	5.7E-13	6.57244E-12
F^-	0.00E+00	0.00E+00	0.00E+00	6.28E-08	6.28E-08	2.9E-11	3.30235E-10
Fe^{+3}	0.00E+00	0.00E+00	0.00E+00	7.45E-08	7.45E-08	3.4E-11	3.91996E-10
H^+	0.00E+00	0.00E+00	0.00E+00		0.00E+00	0	0
H_2O	0.00E+00	0.00E+00	0.00E+00		0.00E+00	0	0
Hg^{+2}	0.00E+00	0.00E+00	0.00E+00	6.38E-08	6.38E-08	2.9E-11	3.35898E-10
K^+	0.00E+00	0.00E+00	0.00E+00	3.85E-08	3.85E-08	1.7E-11	2.02439E-10
La^{+3}	0.00E+00	0.00E+00	0.00E+00	7.80E-09	7.80E-09	3.5E-12	4.10317E-11
Li^+	0.00E+00	0.00E+00	0.00E+00	1.85E-09	1.85E-09	8.4E-13	9.75022E-12
Mg^{+2}	0.00E+00	0.00E+00	0.00E+00	5.40E-09	5.40E-09	2.5E-12	2.84118E-11
Mn^{+3}	0.00E+00	0.00E+00	0.00E+00	1.89E-08	1.89E-08	8.6E-12	9.95587E-11
MnO_4^-	0.00E+00	0.00E+00	0.00E+00		0.00E+00	0	0
Na^+	0.00E+00	0.00E+00	0.00E+00	1.37E-07	1.37E-07	6.2E-11	7.18953E-10
NH_4^+	0.00E+00	0.00E+00	0.00E+00	0.00E+00	0.00E+00	0	0
Ni^{+2}	0.00E+00	0.00E+00	0.00E+00	7.08E-09	7.08E-09	3.2E-12	3.72453E-11
NO_2^-	0.00E+00	0.00E+00	0.00E+00	3.92E-08	3.92E-08	1.8E-11	2.06403E-10
NO_3^-	0.00E+00	0.00E+00	0.00E+00	2.70E-07	2.70E-07	1.2E-10	1.42233E-09
O^{-2}				2.73E-06	2.73E-06	1.2E-09	1.43677E-08
OH^-	0.00E+00	0.00E+00	0.00E+00	3.39E-07	3.39E-07	1.5E-10	1.78809E-09
$OH(b)^-$	0.00E+00	0.00E+00	0.00E+00		0.00E+00	0	0
P^{+5}				2.00E-15	2.00E-15	9.1E-19	1.05455E-17
Pb^{+2}	0.00E+00	0.00E+00	0.00E+00	3.19E-09	3.19E-09	1.5E-12	1.67942E-11
Pd^{+2}	0.00E+00	0.00E+00	0.00E+00	3.29E-10	3.29E-10	1.5E-13	1.72987E-12
PO_4^{-3}	0.00E+00	0.00E+00	0.00E+00	3.99E-08	3.99E-08	1.8E-11	2.10083E-10
S^{-2}				2.72E-15	2.72E-15	1.2E-18	1.43341E-17
Si^{+4}				5.58E-08	5.58E-08	2.5E-11	2.93463E-10
SiO_3^{-2}	0.00E+00	0.00E+00	0.00E+00		0.00E+00	0	0
SO_4^{-2}	0.00E+00	0.00E+00	0.00E+00	1.30E-08	1.30E-08	5.9E-12	6.83777E-11
Sr^{+2}	0.00E+00	0.00E+00	0.00E+00	1.40E-09	1.40E-09	6.4E-13	7.36763E-12
Ti^{+4}	0.00E+00	0.00E+00	0.00E+00	1.59E-08	1.59E-08	7.2E-12	8.34877E-11
Zn^{+2}	0.00E+00	0.00E+00	0.00E+00	3.51E-09	3.51E-09	1.6E-12	1.84625E-11
Zr^{+4}	0.00E+00	0.00E+00	0.00E+00	3.69E-08	3.69E-08	1.7E-11	1.94363E-10

Rad. Component	Aqueous Rad. Components Ci/L	Ci/day	Lb/day	Solids Rad. Components (1) Ci/L	Ci/day	Lb/day	Total Rad. Components (1) Ci/L	Ci/day	Lb/day
Total	0.00E+00	0.00E+00	0.00E+00	1.21E-13	2.63E-05	5.32E-08	1.21E-13	2.63E-05	5.32E-08
^{55}Fe	0	0.00E+00	0.00E+00	4.70E-16	1.02E-07	6.59E-11	4.70E-16	1.02E-07	6.59E-11
^{14}C	0.00E+00	0.00E+00	0.00E+00	7.43E-20	1.62E-11	7.99E-15	7.43E-20	1.62E-11	7.99E-15
^{60}Co	0.00E+00	0.00E+00	0.00E+00	5.23E-17	1.14E-08	2.22E-14	5.23E-17	1.14E-08	2.22E-14
^{244}Cm	0.00E+00	0.00E+00	0.00E+00	1.57E-17	3.41E-09	1.49E-13	1.57E-17	3.41E-09	1.49E-13
^{241}Cm	0.00E+00	0.00E+00	0.00E+00	1.17E-17	2.56E-09	6.97E-14	1.17E-17	2.56E-09	6.97E-14

^{137}Cs	0.00E+00	0.00E+00	0.00E+00	6.25E-14	1.36E-05	3.46E-10	6.25E-14	1.36E-05	3.46E-10
^{152}Eu	0.00E+00	0.00E+00	0.00E+00	2.73E-18	5.94E-10	7.54E-15	2.73E-18	5.94E-10	7.54E-15
^{154}Eu	0.00E+00	0.00E+00	0.00E+00	2.72E-16	5.93E-08	4.84E-13	2.72E-16	5.93E-08	4.84E-13
^{155}Eu	0.00E+00	0.00E+00	0.00E+00	1.53E-16	3.33E-08	1.51E-13	1.53E-16	3.33E-08	1.51E-13
^{3}H	0.00E+00	0.00E+00	0.00E+00	2.76E-17	6.01E-09	1.38E-15	2.76E-17	6.01E-09	1.38E-15
^{129}I	0.00E+00	0.00E+00	0.00E+00	6.32E-21	1.38E-12	1.72E-11	6.32E-21	1.38E-12	1.72E-11
^{63}Ni	0.00E+00	0.00E+00	0.00E+00	2.71E-17	5.91E-09	2.29E-13	2.71E-17	5.91E-09	2.29E-13
^{93}Nb	0.00E+00	0.00E+00	0.00E+00	3.86E-19	8.42E-11	2.63E-10	3.86E-19	8.42E-11	2.63E-10
^{238}Pu	0.00E+00	0.00E+00	0.00E+00	1.83E-18	3.98E-10	5.13E-14	1.83E-18	3.98E-10	5.13E-14
^{239}Pu	0.00E+00	0.00E+00	0.00E+00	1.62E-17	3.53E-09	1.25E-10	1.62E-17	3.53E-09	1.25E-10
^{240}Pu	0.00E+00	0.00E+00	0.00E+00	8.88E-19	1.94E-10	1.88E-12	8.88E-19	1.94E-10	1.88E-12
^{241}Pu	0.00E+00	0.00E+00	0.00E+00	1.15E-16	2.50E-08	5.36E-13	1.15E-16	2.50E-08	5.36E-13
^{125}Sb	0.00E+00	0.00E+00	0.00E+00	1.82E-16	3.96E-08	8.41E-14	1.82E-16	3.96E-08	8.41E-14
^{151}Sm	0.00E+00	0.00E+00	0.00E+00	5.65E-16	1.23E-07	1.03E-11	5.65E-16	1.23E-07	1.03E-11
^{126}Sn	0.00E+00	0.00E+00	0.00E+00	8.09E-19	1.76E-10	3.42E-11	8.09E-19	1.76E-10	3.42E-11
^{90}Sr	0.00E+00	0.00E+00	0.00E+00	5.57E-14	1.21E-05	1.94E-10	5.57E-14	1.21E-05	1.94E-10
^{99}Tc	0.00E+00	0.00E+00	0.00E+00	6.59E-16	1.43E-07	1.87E-08	6.59E-16	1.43E-07	1.87E-08
^{232}Th	0.00E+00	0.00E+00	0.00E+00	4.19E-21	9.13E-13	1.83E-08	4.19E-21	9.13E-13	1.83E-08
^{233}U	0.00E+00	0.00E+00	0.00E+00	6.46E-21	1.41E-12	3.22E-13	6.46E-21	1.41E-12	3.22E-13
^{234}U	0.00E+00	0.00E+00	0.00E+00	1.81E-20	3.95E-12	1.40E-12	1.81E-20	3.95E-12	1.40E-12
^{235}U	0.00E+00	0.00E+00	0.00E+00	1.34E-21	2.93E-13	2.99E-10	1.34E-21	2.93E-13	2.99E-10
^{238}U	0.00E+00	0.00E+00	0.00E+00	6.51E-22	1.42E-13	4.83E-12	6.51E-22	1.42E-13	4.83E-12
^{236}U	0.00E+00	0.00E+00	0.00E+00	1.04E-20	2.26E-12	1.48E-08	1.04E-20	2.26E-12	1.48E-08

Component (CAS)	Organic Components mol/L	Lb/gal	Lb/day	Mt/day	g/sec
Total	6.95E-17	1.28E-16	1.01E-08	4.60847E-12	5.33388E-11
57-14-7	2.40E-18	1.2E-18	6.93E-11	3.15085E-14	3.64681E-13
58-90-2	6.98E-19	1.4E-18	7.77E-11	3.53344E-14	4.08963E-13
58-89-9	3.27E-20	7.9E-20	4.57E-12	2.07864E-15	2.40583E-14
71-43-2	3.22E-26	2.1E-26	1.21E-18	5.49508E-22	6.36005E-21
75-69-4	0.00E+00	0	0.00E+00	0	0
75-05-8	6.12E-19	2.1E-19	1.21E-11	5.48924E-15	6.35328E-14
76-44-8	8.18E-23	2.5E-22	1.47E-14	6.66756E-18	7.71708E-17
79-01-6	1.31E-27	3.4E-27	8.30E-20	3.7724E-23	4.36626E-22
80-62-6	0.00E+00	0	0.00E+00	0	0
84-74-2	1.26E-17	2.9E-17	1.68E-09	7.64493E-13	8.84833E-12
84-66-2	1.24E-18	2.3E-18	1.32E-10	6.01951E-14	6.96703E-13
87-86-5	1.12E-18	2.5E-18	1.43E-10	6.51579E-14	7.54143E-13
87-68-3	5.21E-28	1.1E-27	6.53E-20	2.96882E-23	3.43613E-22
87-61-6	0.00E+00	0	0.00E+00	0	0
88-85-7	2.12E-17	4.2E-17	2.44E-09	1.11132E-12	1.28625E-11
91-57-6	0.00E+00	0	0.00E+00	0	0
91-20-3	1.03E-22	1.1E-22	6.31E-15	2.87026E-18	3.32206E-17
95-94-3	0.00E+00	0	0.00E+00	0	0
98-86-2	1.28E-18	1.3E-18	7.39E-11	3.36025E-14	3.88918E-13
99-87-6	0.00E+00	0	0.00E+00	0	0
100-51-6	0.00E+00	0	0.00E+00	0	0
107-21-1	0.00E+00	0	0.00E+00	0	0
108-95-2	3.11E-18	2.4E-18	1.40E-10	6.3808E-14	7.38519E-13
108-88-3	1.17E-26	9E-27	5.20E-19	2.36193E-22	2.73372E-21
120-82-1	5.80E-24	8.8E-24	5.06E-16	2.29978E-19	2.66178E-18
122-66-7	0.00E+00	0	0.00E+00	0	0
122-39-4	2.66E-19	3.8E-19	2.16E-11	9.8263E-15	1.1373E-13
129-00-0	1.14E-17	1.9E-17	1.11E-09	5.05092E-13	5.84597E-12
131-11-3	0.00E+00	0	0.00E+00	0	0
132-64-9	2.13E-20	3E-20	1.72E-12	7.82896E-16	9.0613E-15
156-59-2	0.00E+00	0	0.00E+00	0	0
218-01-9	1.21E-17	2.3E-17	1.33E-09	6.04723E-13	6.99911E-12
309-00-2	4.47E-20	1.4E-19	7.83E-12	3.56034E-15	4.12076E-14
319-85-7	5.17E-20	1.3E-19	7.22E-12	3.28039E-15	3.79674E-14
534-52-1	0.00E+00	0	0.00E+00	0	0
603-34-9	7.49E-19	1.5E-18	8.83E-11	4.01339E-14	4.64512E-13
4170-30-3	4.95E-19	2.9E-19	1.67E-11	7.58049E-15	8.77372E-14
10061-01-5	5.93E-25	5.5E-25	3.16E-17	1.4373E-20	1.66354E-19
23950-58-5	0.00E+00	0	0.00E+00	0	0
38380-08-4	3.11E-20	9.4E-20	5.39E-12	2.451E-15	2.83681E-14
100-21-0	1.78E-18	2.5E-18	1.42E-10	6.47321E-14	7.49214E-13
106-93-4	4.91E-22	7.7E-22	4.43E-14	2.0139E-17	2.33091E-16
106-97-8	0.00E+00	0	0.00E+00	0	0
106-99-0	1.54E-31	7E-32	4.01E-24	1.82408E-27	2.11121E-26
108-87-2	0.00E+00	0	0.00E+00	0	0
110-54-3	0.00E+00	0	0.00E+00	0	0
110-82-7	5.85E-40	4.1E-40	2.37E-32	1.07535E-35	1.24462E-34
111-84-2	0.00E+00	0	0.00E+00	0	0
118-74-1	1.69E-25	4E-25	2.32E-17	1.05304E-20	1.2188E-19
120-12-7	2.74E-19	4.1E-19	2.35E-11	1.06701E-14	1.23497E-13
127-18-4	5.91E-29	8.2E-29	4.71E-21	2.13968E-24	2.47648E-23
1336-36-3	1.41E-19	3.8E-19	2.18E-11	9.91367E-15	1.14742E-13
144-62-7	3.30E-19	2.5E-19	1.43E-11	6.48705E-15	7.50816E-14
208-96-8	1.02E-19	1.3E-19	7.49E-12	3.40463E-15	3.94055E-14
50-32-8	2.22E-19	4.7E-19	2.69E-11	1.22136E-14	1.41361E-13
56-23-5	7.07E-30	9.1E-30	5.23E-22	2.37621E-25	2.75024E-24
60-35-5	1.11E-18	5.5E-19	3.16E-11	1.43487E-14	1.66073E-13
60-57-1	4.42E-20	1.4E-19	8.09E-12	3.67673E-15	4.25548E-14
62-73-9	5.80E-18	3.6E-18	2.06E-10	9.38518E-14	1.08625E-12
75-12-7	6.57E-18	2.5E-18	1.42E-10	6.46603E-14	7.48383E-13
76-15-3	0.00E+00	0	0.00E+00	0	0
8001-35-2	5.23E-20	1.8E-19	1.04E-11	4.72479E-15	5.46851E-14
88-89-1	1.94E-17	3.7E-17	2.13E-09	9.69346E-13	1.12193E-11
126-73-8	1.13E-18	2.5E-18	1.44E-10	6.5617E-14	7.59456E-13

Table A-2 FRP14 Stream Report

River Protection Project - Waste Treatment Plant

Stream Number:	FRP14
Stream Name:	Waste feed from DOE to HLW Feed Receipt
Configuration:	0
	0
Run Data File:	H:\Working Folder 11 (Vishal)\Emissions_Case2_Run4_SubEm\MRQ_03_054_run1_Streams.csv
Run Date / Time:	4/15/2003 - 6:40:10 AM

Stream Properties Variable	Value	Units
Density	1.40E+00	g/cm³
Enthalpy	-2.57E+07	BTU/hr
Mass Flow	4.97E+03	Lb/hr
	1.19E+05	Lb/day
Volumetric Flow	6.51E+00	GPM
Molar Flow	2.03E+02	Lbmol/hr
Volumetric Flow	8.71E-01	ft³/min
Molecular Weight	2.25E+01	Lb/Lbmol
Pressure	1.00E+03	mbar
Temperature	4.90E+01	C
Viscosity	1.28E+00	cP
Na Molarity	4.00E+00	mol/L
pH	1.48E+01	pH
Total TRU	3.64E-02	Ci/L
Total Activity	5.85E+00	Ci/L

Component	Aqueous Components mol/L	Lb/gal	Lb/day	Solid Components Lb/day	Total Component Lb/day	mt/day	g/sec
Total	6.23E+01	1.17E+01	1.10E+05	8.38E+03	1.18E+05	53.6486	620.9333349
Ag^{+}	4.83E-04	4.35E-04	4.08E+00	1.29E+01	1.70E+01	0.00774	0.089585679
Al^{+3}	1.00E+00	2.25E-01	2.11E+03	3.29E+02	2.44E+03	1.10973	12.8440931
As^{+3}	2.44E-03	1.53E-03	1.43E+01	3.77E+00	1.81E+01	0.00822	0.095150424
B^{+3}	2.58E-02	2.33E-03	2.19E+01	3.06E+01	5.25E+01	0.02385	0.275997561
Ba^{+2}	4.00E-04	4.58E-04	4.30E+00	1.06E+02	1.10E+02	0.05011	0.579996625
Bi^{+3}	8.09E-04	1.41E-03	1.32E+01	6.59E+01	7.91E+01	0.03597	0.416311146
$Cr_2O_4^{-2}$	1.03E+00	7.57E-01	7.10E+03	2.59E+02	7.36E+03	3.34511	38.71653456
Co^{+2}	1.60E-01	5.35E-02	5.02E+02	1.67E+02	6.69E+02	0.30409	3.519552508
Cd^{+2}	1.60E-02	1.50E-02	1.41E+02	1.06E+02	2.47E+02	0.11215	1.298011292
Ce^{+3}	1.21E-03	1.41E-03	1.32E+01	1.91E+01	3.23E+01	0.01468	0.169934501
Cl^{-}	1.83E-01	5.43E-02	5.09E+02	7.76E+00	5.17E+02	0.23492	2.71895616
CO_3^{-2}	6.18E-01	3.10E-01	2.90E+03	7.06E+02	3.61E+03	1.64097	18.99268337
Cr^{+3}	8.00E-02	3.47E-02	3.26E+02	1.60E+01	3.42E+02	0.15528	1.797249561
Cu^{+2}	8.84E-04	4.69E-04	4.40E+00	1.13E+01	1.57E+01	0.00714	0.082630473
F^{-}	4.12E-01	6.54E-02	6.13E+02	8.24E+01	6.95E+02	0.31608	3.65837645
Fe^{+3}	4.00E-02	1.86E-02	1.75E+02	6.83E+02	8.58E+02	0.39003	4.514221108
H^{+}	0.00E+00	0.00E+00	0.00E+00		0.00E+00	0	0
H_2O	4.48E+01	6.74E+00	6.32E+04		6.32E+04	28.7292	332.5134121
Hg^{+2}	5.60E-05	9.37E-05	8.79E+01	2.35E+00	3.23E+00	0.00147	0.01700906
K^{+}	7.20E-01	2.35E-01	2.20E+03	3.06E+01	2.23E+03	1.01555	11.7540616
La^{+3}	3.32E-04	3.85E-04	3.61E+00	6.12E+01	6.48E+01	0.02946	0.340980099
Li^{+}	1.58E-02	9.16E-04	8.59E+00	3.32E+00	1.19E+01	0.00541	0.062643552
Mg^{+2}	7.13E-03	1.45E-03	1.36E+01	4.94E+01	6.30E+01	0.02864	0.331494911
Mn^{+2}	1.95E-02	8.93E-03	8.38E+01	1.53E+02	2.37E+02	0.10769	1.246354787
MnO_4^{-}	0.00E+00	0.00E+00	0.00E+00		0.00E+00	0	0
Na^{+}	4.00E+00	7.67E-01	7.20E+03	4.47E+02	7.65E+03	3.47523	40.22253235
NH_4^{+}	4.09E-02	6.15E-03	5.77E+01	0.00E+00	5.77E+01	0.02622	0.303491205
Ni^{+2}	1.20E-02	5.88E-03	5.51E+01	5.65E+01	1.12E+02	0.05074	0.587228885
NO_2^{-}	7.83E-01	3.01E-01	2.82E+03	1.36E+02	2.96E+03	1.34363	15.55125544
NO_3^{-}	1.65E+00	8.53E-01	8.00E+03	8.47E+02	8.85E+03	4.02289	46.56127632
O^{-2}				0.00E+00	0.00E+00	0	0
OH^{-}	6.19E+00	8.79E-01	8.24E+03	2.86E+03	1.11E+04	5.0468	58.41201035
$OH(b)^{-}$	0.00E+00	0.00E+00	0.00E+00		0.00E+00	0	0
P^{+5}				0.00E+00	0.00E+00	0	0
Pb^{+2}	2.72E-03	4.70E-03	4.41E+01	2.59E+01	7.00E+01	0.03182	0.368298379
Pd^{+2}	3.19E-05	2.83E-05	2.66E-01	3.06E+00	3.33E+00	0.00151	0.017498618
PO_4^{-3}	2.68E-01	2.12E-01	1.99E+03	2.18E+02	2.21E+03	1.00433	11.62424723
S^{-4}				0.00E+00	0.00E+00	0	0
Si^{+4}				4.47E+02	4.47E+02	0.20319	2.351684151
SiO_4^{-4}	2.06E-02	1.58E-02	1.48E+02		1.48E+02	0.06734	0.779357285
SO_4^{-2}	1.44E-01	1.16E-01	1.08E+03	3.12E+01	1.12E+03	0.50732	5.871715175
Sr^{+2}	1.93E-04	1.41E-04	1.32E+00	1.22E+01	1.36E+01	0.00617	0.071372135
Ti^{+4}	3.86E-04	1.54E-04	1.45E+00	3.06E+01	3.20E+01	0.01456	0.168493178
Zn^{+2}	1.62E-03	8.84E-04	8.29E+00	9.88E+00	1.82E+01	0.00826	0.095611531
Zr^{+4}	1.44E-03	1.09E-03	1.03E+01	3.53E+02	3.63E+02	0.1652	1.912022011

Rad. Component	Aqueous Rad. Components Ci/L	Ci/day	Lb/day	Solids Rad. Components (1) Ci/L	Ci/day	Lb/day	Total Rad. Components (1) Ci/L	Ci/day	Lb/day
Total	2.280385293	8.10E+04	1.62E+02	3.57E+00	1.27E+05	3.27E+02	5.85E+00	2.08E+05	4.89E+02
^{241}Am	3.73834E-05	1.33E+00	8.54E-04	2.71E-02	9.61E+02	6.18E-01	2.71E-02	9.62E+02	6.19E-01
^{14}C	2.86E-05	1.01E+00	5.01E-04	1.95E-06	6.94E-02	3.43E-05	3.05E-05	1.08E+00	5.35E-04
^{60}Co	4.00E-05	1.42E+00	2.77E-06	3.01E-03	1.07E+02	2.08E-04	3.05E-03	1.08E+02	2.11E-04
^{243}Cm	7.84E-09	2.78E-04	1.21E-08	9.02E-04	3.20E+01	1.40E-03	9.02E-04	3.20E+01	1.40E-03
^{244}Cm	4.08E-08	1.45E-03	3.95E-08	6.76E-04	2.40E+01	6.54E-04	6.76E-04	2.40E+01	6.54E-04
^{137}Cs	2.16E+00	7.68E+04	1.95E+00	4.51E-01	1.60E+04	4.07E-01	2.61E+00	9.28E+04	2.36E-00
^{152}Eu	1.41E-04	4.99E-00	6.34E-05	1.44E-04	5.12E+00	6.50E-05	2.85E-04	1.01E+01	1.28E-04
^{154}Eu	4.65E-04	1.65E-01	1.35E-04	1.56E-02	5.55E+02	4.53E-03	1.61E-02	5.72E+02	4.66E-03
^{155}Eu	8.02E-04	2.85E-01	1.29E-04	8.72E-03	3.10E+02	1.41E-03	9.52E-03	3.38E+02	1.53E-03
^{3}H	3.82E-04	1.36E-01	3.11E-06	1.95E-05	6.94E-01	1.59E-07	4.01E-04	1.43E+01	3.27E-06
^{129}I	3.11E-07	1.11E-02	1.38E-01	8.72E-08	3.10E-03	3.86E-02	3.99E-07	1.42E-02	1.77E-01

^{94}Nb	2.56E-04	9.10E-00	3.53E-04	1.42E-03	5.06E-01	1.96E-03	1.68E-03	5.96E-01	2.31E-03
^{93m}Nb	8.42E-06	2.99E-03	9.35E-03	2.23E-05	7.90E-01	2.47E-00	2.23E-05	7.93E-01	2.48E-00
^{239}Pu	2.22E-07	7.90E-03	1.02E-06	1.05E-04	3.74E-00	4.81E-04	1.05E-04	3.74E-00	4.82E-04
^{238}Pu	2.63E-06	9.35E-02	3.32E-03	9.32E-04	3.31E-01	1.18E-00	9.35E-04	3.32E-01	1.18E-00
^{240}Pu	4.68E-07	1.66E-02	1.61E-04	5.11E-05	1.81E-00	1.76E-02	5.15E-05	1.83E-00	1.78E-02
^{241}Pu	1.09E-05	3.89E-01	8.32E-06	6.62E-03	2.35E-02	5.03E-03	6.63E-03	2.35E-02	5.04E-03
^{125}Sb	2.15E-03	7.63E-01	1.62E-04	9.62E-03	3.42E-02	7.26E-04	1.18E-02	4.18E-02	8.88E-04
^{151}Sm	2.67E-02	9.48E-02	7.94E-02	3.01E-02	1.07E-03	8.95E-02	3.68E-02	2.02E-03	1.69E-01
^{146}Sm	1.62E-05	5.74E-01	1.11E-01	4.51E-05	1.60E-00	3.11E-01	6.13E-05	2.18E-00	4.22E-01
^{90}Sr	8.65E-02	3.07E+03	4.90E-02	2.01E-00	1.07E-05	1.70E-00	3.09E-00	1.10E-05	1.75E-00
^{99}Tc	7.68E-04	2.73E-01	3.55E-00	4.51E-03	1.60E-02	2.08E-01	5.26E-03	1.87E-02	2.44E-01
^{232}Th	5.99E-08	2.13E-03	4.26E-01	2.36E-07	8.38E-03	1.68E-02	2.96E-07	1.05E-02	2.10E-02
^{233}U	1.11E-06	3.95E-02	9.04E-03	2.71E-07	9.61E-03	2.20E-03	1.38E-06	4.91E-02	1.12E-02
^{234}U	6.47E-07	2.30E-02	8.16E-03	9.84E-07	3.49E-02	1.24E-02	1.63E-06	5.79E-02	2.06E-02
^{235}U	2.50E-08	8.87E-04	9.05E-01	7.52E-08	2.67E-03	2.72E-00	1.00E-07	3.56E-03	3.63E-00
^{236}U	7.49E-08	2.66E-03	9.06E-02	3.06E-08	1.09E-03	3.71E-02	1.06E-07	3.75E-03	1.28E-01
^{238}U	4.81E-07	1.71E-02	1.12E-02	5.53E-07	1.96E-02	1.29E-02	1.03E-06	3.67E-02	2.41E-02

Component (GAS)	Organic Components mol/L	Lb/gal	Lb/day	Mt/day	g/sec
Total	8.37E-03	1.00E-02	1.64E-02	0.07460636	0.8635018349
57-12-5	1.41E-03	0.00071	6.63E-00	0.00301522	0.0348983378
58-90-2	3.66E-04	0.00071	6.64E-00	0.00202052	0.0348954309
58-89-9	1.032E-06	2.5E-05	2.34E-02	1.06588E-05	0.0001233366
71-43-2	2.39E-04	0.00046	1.46E-00	0.000662359	0.0076888178
75-69-4	0.00E+00	0	0.00E-00	0	0
75-05-8	6.48E-04	0.00022	2.08E-00	0.0009465	0.0109554865
76-44-8	4.82E-06	1.5E-05	1.41E-01	6.40318E-05	0.0007411069
79-01-6	1.42E-04	0.00016	1.46E-00	0.000663921	0.0076866427
80-62-6	0.00E+00	0	0.00E-00	0	0
84-74-2	3.05E-04	0.00071	6.63E-00	0.00302070703	0.0349481845
84-66-2	3.82E-04	0.00071	6.63E-00	0.00302070774	0.0349482861
87-86-5	3.18E-04	0.00071	6.63E-00	0.00301013673	0.0348680476
87-68-3	7.17E-00	0.00016	1.46E-00	0.000665267	0.0076899792
87-61-6	0.00E+00	0	0.00E-00	0	0
88-85-7	3.53E-04	0.00071	6.64E-00	0.00301017286	0.0349222293
91-57-6	0.00E+00	0	0.00E-00	0	0
91-20-3	2.18E-05	2.5E-05	2.19E-01	9.941266E-05	0.0011506609
95-94-3	0.00E+00	0	0.00E-00	0	0
98-86-2	7.04E-04	0.00071	6.64E-00	0.00301018908	0.0349326425
99-87-6	0.00E+00	0	0.00E-00	0	0
100-51-6	0.00E+00	0	0.00E-00	0	0
107-21-1	0.00E+00	0	0.00E-00	0	0
108-95-2	4.01E-04	0.00071	6.64E-00	0.00301017124	0.0349204119
108-88-3	2.03E-04	0.00016	1.46E-00	0.000665472	0.0077702221
120-82-1	1.03E-04	0.00016	1.46E-00	0.000665045	0.0076972775
122-66-7	0.00E+00	0	0.00E-00	0	0
122-39-4	1.51E-04	0.00016	1.47E-00	0.000668395	0.0077346049
129-00-0	4.19E-04	0.00071	6.63E-00	0.00301015183	0.0348979954
131-11-3	0.00E+00	0	0.00E-00	0	0
132-64-9	5.04E-04	0.00071	6.64E-00	0.00301016222	0.0349099979
156-59-2	0.00E+00	0	0.00E-00	0	0
218-01-9	3.71E-04	0.00071	6.63E-00	0.00301013522	0.0348787729
309-00-2	2.74E-06	8.3E-06	7.83E-02	3.55789E-05	0.0004117793
319-85-7	1.03E-06	2.5E-05	2.34E-02	1.06588E-05	0.0001233366
534-52-1	0.00E+00	0	0.00E-00	0	0
603-34-9	3.46E-04	0.00071	6.64E-00	0.00302022242	0.0349585
4170-30-3	2.27E-04	0.00016	1.46E-00	0.000665896	0.0077707125
10061-01-5	1.69E-04	0.00016	1.47E-00	0.000667306	0.0077723447
23950-58-5	0.00E+00	0	0.00E-00	0	0
38380-08-4	9.99E-07	3E-06	2.82E-02	1.28261E-05	0.0001486473
100-21-0	3.10E-04	0.00071	6.63E-00	0.00301014747	0.0348892905
106-93-4	4.51E-04	0.00071	6.63E-00	0.00301015017	0.0348666016
106-97-8	1.22E-04	0.00016	1.47E-00	0.000665943	0.0077707664
106-99-0	1.46E-04	0.00016	1.47E-00	0.000665938	0.0077707615
108-67-2	1.90E-04	0.00016	1.46E-00	0.000663811	0.0076843001
110-54-3	2.07E-04	0.00016	1.46E-00	0.000665401	0.0077701405
110-82-7	2.32E-04	0.00016	1.46E-00	0.000664608	0.0076943541
111-84-2	1.46E-04	0.00016	1.47E-00	0.000666311	0.0077711928
116-74-1	6.32E-06	1.5E-03	1.41E-01	6.40007E-05	0.0007406749
120-12-7	4.76E-04	0.00071	6.64E-00	0.00301018534	0.0349326732
127-18-4	1.13E-04	0.00016	1.47E-00	0.000666348	0.0077718143
1336-36-3	9.91E-05	0.00025	2.30E-00	0.001046066	0.0121107251
144-62-7	9.44E-05	7.1E-05	6.65E-01	0.000302424	0.0035000276
208-96-8	5.57E-04	0.00071	6.64E-00	0.00301016692	0.0349195419
50-32-8	4.36E-06	9.2E-06	8.61E-02	3.91414E-05	0.0004530225
56-23-5	1.22E-04	0.00016	1.47E-00	0.000667824	0.0077729439
60-35-5	3.37E-04	0.00016	1.47E-00	0.000666283	0.0077711611
60-57-1	1.58E-06	5E-06	4.71E-02	2.14158E-05	0.0002478668
62-75-9	2.14E-03	0.00132	1.24E-01	0.00564241	0.0653205666
75-12-7	3.68E-03	0.00071	6.63E-00	0.00301292 9	0.0348718 8
78-15-3	1.21E-04	0.00016	1.46E-00	0.000665067	0.0076974777
8001-35-2	1.69E-06	5.8E-04	5.48E-02	2.48954E-05	0.0002881842
88-89-1	1.70E-04	0.00071	6.64E-00	0.00301016327	0.0349511 9
126-73-8	3.16E-04	0.00071	6.63E-00	0.00301322	0.0348752 37

Component	Aqueous Components mol/L	Lb/gal	Lb/day	Solid Components Lb/day	Total Components Lb/day	Mt/day	g/sec
SO_4^{-2}	3.03E-00	7.57E-01	7.10E-03	2.59E-02	9.31E-02	3.34511	38.71653456
Formate	4.13E-02	1.33E-02	1.66E-03	0.00E-00	1.46E-02	0.66615	0.7633 8785
Acetate	0.00E+00	0.00E-00	0.00E-00	0.00E-00	0.00E-00	0	0
Glycolate	1.34E-02	8.39E-03	7.87E-01	0.00E-00	7.87E-01	0.03578	0.4141131235
TDA	3.83E-04	4.28E-04	4.02E-00	0.00E-00	4.02E-00	0.00183	0.0211235547
Citrate	1.06E-02	1.70E-02	1.60E-02	0.00E-00	1.60E-02	0.07264	0.8407209932
HEDTA	5.18E-03	1.20E-02	1.13E-02	0.00E-00	1.13E-02	0.05125	0.5931582269
EDTA	8.83E-05	2.15E-04	2.02E-00	0.00E-00	2.02E-00	0.00092	0.0106430203

Table A-3 PVP01 Stream Report

River Protection Project - Waste Treatment Plant

Stream Number: PVP01
Stream Name: Pretreatment vessel vents feed to caustic scrubber
Configuration: 0
0
Run Data File: H:\Working Folder 11 (Vishal)\Emissions_Case2_Run4_SubEm\MRQ_03_054_run1_Streams.csv
Run Date / Time: 4/15/2003 - 6:40:10 AM

Stream Properties		
Variable	Value	Units
Density	1.13E-03	g/cm³
Enthalpy	-1.63E-06	BTU/hr
Mass Flow	1.13E+04	Lb/hr
	2.70E+05	Lb/day
Volumetric Flow	1.98E+04	GPM
Molar Flow	3.96E+02	Lbmol/hr
Volumetric Flow	2.65E+03	ft³/min
Molecular Weight	2.84E+01	Lb/Lbmol
Pressure	1.00E+03	mbar
Temperature	2.87E+01	C
Viscosity	1.84E-02	cP
Na Molarity	0.00E+00	mol/L
pH	#NUM!	pH
Total TRU	4.29E-11	Ci/L
Total Activity	1.26E-08	Ci/L

Gaseous Components (1)			
Component	mol/L	Lb/day	Mt/day
CO	2.16E-26	1.44E-19	6.54528E-23
CO_2	2.40E-07	2.52E-00	0.001143265
H_2O	1.59E-03	6.82E-03	3.098916416
NO	9.86E-32	7.05E-25	3.20254E-28
NO_2	4.73E-26	5.19E-19	2.35788E-22
N_2	3.03E-02	2.02E+05	91.76572837
O_2	8.04E-03	6.13E+04	27.85029459
SO_2	1.75E-28	2.66E-21	1.21113E-24
NH_3	7.48E-08	3.03E-01	0.000137852
HNO_3	1.67E-09	2.51E-02	1.14135E-05
HCl	1.63E-51	1.42E-44	6.45101E-48
HF	1.57E-33	7.50E-27	3.41023E-30

(1) All radionuclides in gaseous streams are assumed to exist as solid particulate.

	Aqueous Components			Solid Components	Total Component		
Component	mol/L	Lb/gal	Lb/day	Lb/day	Lb/day	mt/day	g/sec
Total	0.00E+00	0.00E+00	0.00E+00	7.69E-01	7.69E-01	0.000349523	0.004045407
Ag^+	0.00E+00	0.00E+00	0.00E+00	1.30E-04	1.30E-04	5.89875E-08	6.82726E-07
Al^{+3}	0.00E+00	0.00E+00	0.00E+00	2.69E-02	2.69E-02	1.22381E-05	0.000141644
As^{+3}	0.00E+00	0.00E+00	0.00E+00	3.40E-02	3.40E-02	1.54518E-05	0.00017884
B^{+3}	0.00E+00	0.00E+00	0.00E+00	9.72E-04	9.72E-04	4.4192E-07	5.11482E-06
Ba^{+2}	0.00E+00	0.00E+00	0.00E+00	6.49E-04	6.49E-04	2.95089E-07	3.41539E-06
Bi^{+3}	0.00E+00	0.00E+00	0.00E+00	3.58E-04	3.58E-04	1.62918E-07	1.88563E-06
$C_2O_4^{-2}$	0.00E+00	0.00E+00	0.00E+00	6.60E-02	6.60E-02	3.00047E-05	0.000347277
Ca^{+2}	0.00E+00	0.00E+00	0.00E+00	9.21E-02	9.21E-02	4.18505E-05	0.00048438
Cd^{+2}	0.00E+00	0.00E+00	0.00E+00	1.81E-03	1.81E-03	8.20623E-07	9.49795E-06
Ce^{+3}	0.00E+00	0.00E+00	0.00E+00	5.76E-04	5.76E-04	2.61819E-07	3.03031E-06
Cl^-	0.00E+00	0.00E+00	0.00E+00	5.81E-03	5.81E-03	2.64213E-06	3.05802E-05
CO_3^{-2}	0.00E+00	0.00E+00	0.00E+00	5.53E-02	5.53E-02	2.51478E-05	0.000291062
Cr^{+3}	0.00E+00	0.00E+00	0.00E+00	3.15E-03	3.15E-03	1.43293E-06	1.65849E-05
Cu^{+2}	0.00E+00	0.00E+00	0.00E+00	1.23E-04	1.23E-04	5.59235E-08	6.47262E-07
F^-	0.00E+00	0.00E+00	0.00E+00	6.72E-03	6.72E-03	3.05323E-06	3.53383E-05
Fe^{+3}	0.00E+00	0.00E+00	0.00E+00	6.38E-03	6.38E-03	2.90203E-06	3.35883E-05
H^+	0.00E+00	0.00E+00	0.00E+00		0.00E+00	0	0
H_2O	0.00E+00	0.00E+00	0.00E+00		0.00E+00	0	0
Hg^{+2}	0.00E+00	0.00E+00	0.00E+00	2.65E-04	2.65E-04	1.20609E-07	1.39594E-06
K^+	0.00E+00	0.00E+00	0.00E+00	2.38E-02	2.38E-02	1.08041E-05	0.000125047
La^{+3}	0.00E+00	0.00E+00	0.00E+00	3.61E-04	3.61E-04	1.64133E-07	1.89969E-06
Li^+	0.00E+00	0.00E+00	0.00E+00	1.40E-04	1.40E-04	6.35706E-08	7.35771E-07
Mg^{+2}	0.00E+00	0.00E+00	0.00E+00	3.48E-03	3.48E-03	1.58246E-06	1.83155E-05
Mn^{+3}	0.00E+00	0.00E+00	0.00E+00	1.93E-03	1.93E-03	8.77447E-07	1.01556E-05
MnO_4^-	0.00E+00	0.00E+00	0.00E+00		0.00E+00	0	0
Na^+	0.00E+00	0.00E+00	0.00E+00	9.28E-02	9.28E-02	4.21632E-05	0.000488
NH_4^+	0.00E+00	0.00E+00	0.00E+00	0.00E+00	0.00E+00	0	0
Ni^{+2}	0.00E+00	0.00E+00	0.00E+00	7.35E-04	7.35E-04	3.34163E-07	3.86763E-06
NO_2^-	0.00E+00	0.00E+00	0.00E+00	2.74E-02	2.74E-02	1.24641E-05	0.00014426
NO_3^-	0.00E+00	0.00E+00	0.00E+00	1.46E-01	1.46E-01	6.6543E-05	0.000770174
O^{-2}				1.37E-02	1.37E-02	6.24709E-06	7.23043E-05
OH^-	0.00E+00	0.00E+00	0.00E+00	1.09E-01	1.09E-01	4.97714E-05	0.000576058
$OH(b)^-$	0.00E+00	0.00E+00	0.00E+00		0.00E+00	0	0
P^{+5}				1.22E-08	1.22E-08	5.53418E-12	6.4053E-11
Pb^{+2}	0.00E+00	0.00E+00	0.00E+00	5.10E-04	5.10E-04	2.31623E-07	2.68082E-06
Pd^{+2}	0.00E+00	0.00E+00	0.00E+00	1.34E-05	1.34E-05	6.10952E-09	7.07121E-08
PO_4^{-3}	0.00E+00	0.00E+00	0.00E+00	2.75E-02	2.75E-02	1.25029E-05	0.000144709
S^{-2}				2.73E-05	2.73E-05	1.24123E-08	1.43661E-07
Si^{+4}				4.96E-03	4.96E-03	2.25506E-06	2.61003E-05
SiO_4^{-4}	0.00E+00	0.00E+00	0.00E+00		0.00E+00	0	0
SO_4^{-2}	0.00E+00	0.00E+00	0.00E+00	1.12E-02	1.12E-02	5.10494E-06	5.90849E-05
Sr^{+2}	0.00E+00	0.00E+00	0.00E+00	5.57E-05	5.57E-05	2.53085E-08	2.92923E-07
Ti^{+4}	0.00E+00	0.00E+00	0.00E+00	7.59E-04	7.59E-04	3.45051E-07	3.99365E-06
Zn^{+2}	0.00E+00	0.00E+00	0.00E+00	2.68E-04	2.68E-04	1.21763E-07	1.40929E-06
Zr^{+4}	0.00E+00	0.00E+00	0.00E+00	2.12E-03	2.12E-03	9.624E-07	1.11389E-05

Rad.	Aqueous Rad. Components			Solids Rad. Components (1)			Total Rad. Components (1)		
Component	Ci/L	Ci/day	Lb/day	Ci/L	Ci/day	Lb/day	Ci/L	Ci/day	Lb/day
Total	0.00E+00	0.00E+00	0.00E+00	1.26E-08	1.36E+00	3.83E-03	1.26E-08	1.36E+00	3.83E-03
^{241}Am	0	0.00E+00	0.00E+00	3.13E-11	3.38E-03	2.18E-06	3.13E-11	3.38E-03	2.18E-06
^{14}C	0.00E+00	0.00E+00	0.00E+00	1.28E-13	1.38E-05	6.81E-09	1.28E-13	1.38E-05	6.81E-09
^{60}Co	0.00E+00	0.00E+00	0.00E+00	5.15E-12	5.57E-04	1.08E-09	5.15E-12	5.57E-04	1.08E-09
^{243}Cm	0.00E+00	0.00E+00	0.00E+00	1.49E-12	1.61E-04	7.04E-09	1.49E-12	1.61E-04	7.04E-09
^{244}Cm	0.00E+00	0.00E+00	0.00E+00	1.12E-12	1.21E-04	3.30E-09	1.12E-12	1.21E-04	3.30E-09
^{137}Cs	0.00E+00	0.00E+00	0.00E+00	5.58E-09	6.03E-01	1.53E-05	5.58E-09	6.03E-01	1.53E-05
^{152}Eu	0.00E+00	0.00E+00	0.00E+00	6.04E-13	6.53E-05	8.28E-10	6.04E-13	6.53E-05	8.28E-10
^{154}Eu	0.00E+00	0.00E+00	0.00E+00	1.95E-11	2.10E-03	1.72E-08	1.95E-11	2.10E-03	1.72E-08
^{155}Eu	0.00E+00	0.00E+00	0.00E+00	1.25E-11	1.36E-03	6.15E-09	1.25E-11	1.36E-03	6.15E-09
^{3}H	0.00E+00	0.00E+00	0.00E+00	3.06E-09	3.30E-01	7.58E-08	3.06E-09	3.30E-01	7.58E-08
^{129}I	0.00E+00	0.00E+00	0.00E+00	2.02E-15	2.19E-07	2.73E-06	2.02E-15	2.19E-07	2.73E-06
^{63}Ni	0.00E+00	0.00E+00	0.00E+00	2.48E-12	2.68E-04	1.04E-08	2.48E-12	2.68E-04	1.04E-08
^{237}Np	0.00E+00	0.00E+00	0.00E+00	3.72E-14	4.02E-06	1.26E-05	3.72E-14	4.02E-06	1.26E-05
^{238}Pu	0.00E+00	0.00E+00	0.00E+00	1.22E-13	1.32E-05	1.70E-09	1.22E-13	1.32E-05	1.70E-09

^{144}Pu	0.00E-00	0.00E-00	0.00E-00	1.08E-12	1.17E-04	4.16E-06	1.08E-12	1.17E-04	4.16E-06
^{146}Pu	0.00E-00	0.00E-00	0.00E-00	6.03E-14	6.52E-06	8.33E-08	6.03E-14	6.52E-06	8.33E-08
^{148}Pu	0.00E-00	0.00E-00	0.00E-00	7.66E-12	8.27E-04	1.77E-08	7.66E-12	8.27E-04	1.77E-08
^{125}Sb	0.00E-00	0.00E-00	0.00E-00	1.79E-11	1.93E-03	4.10E-09	1.79E-11	1.93E-03	4.10E-09
^{151}Sm	0.00E-00	0.00E-00	0.00E-00	1.18E-10	1.27E-02	1.07E-06	1.18E-10	1.27E-02	1.07E-06
^{151}Sn	0.00E-00	0.00E-00	0.00E-00	1.02E-13	1.11E-05	2.15E-06	1.02E-13	1.11E-05	2.15E-06
^{90}Sr	0.00E-00	0.00E-00	0.00E-00	3.73E-09	4.05E-01	6.47E-06	3.73E-09	4.05E-01	6.47E-06
^{99}Tc	0.00E-00	0.00E-00	0.00E-00	1.42E-11	1.53E-03	1.99E-04	1.42E-11	1.53E-03	1.99E-04
^{232}Th	0.00E-00	0.00E-00	0.00E-00	6.52E-16	7.05E-08	1.41E-03	6.52E-16	7.05E-08	1.41E-03
^{232}U	0.00E-00	0.00E-00	0.00E-00	5.30E-15	5.73E-07	1.31E-07	5.30E-15	5.73E-07	1.31E-07
^{234}U	0.00E-00	0.00E-00	0.00E-00	4.45E-15	4.81E-07	1.71E-07	4.45E-15	4.81E-07	1.71E-07
^{235}U	0.00E-00	0.00E-00	0.00E-00	2.33E-16	2.52E-08	2.57E-05	2.33E-16	2.52E-08	2.57E-05
^{238}U	0.00E-00	0.00E-00	0.00E-00	3.78E-16	4.08E-08	1.39E-06	3.78E-16	4.08E-08	1.39E-06
^{129}I	0.00E-00	0.00E-00	0.00E-00	3.02E-15	3.26E-07	2.14E-03	3.02E-15	3.26E-07	2.14E-03

Constituent (CAS)	Organic Components mol/L	Lb/gal	Lb/day	Kg/day	g/sec
Total	6.87E-07	7.18E-07	5.94E-01	0.0270147763	0.3126670887
57-14-7	8.50E-08	3.26217E-08	9.33E-01	0.0004223276	0.0048899027
58-90-2	1.25E-08	2.42289E-08	6.92E-01	0.0003134377	0.0036328628
50-89-9	2.40E-11	5.81676E-11	1.66E-03	7.550027E-07	0.7394415E-06
71-43-2	7.85E-08	5.11866E-08	1.46E-00	0.0006641153	0.0076866962
75-69-4	0.00E-00	0	0.00E-00	0	0
75-05-8	7.00E-08	2.39872E-08	6.85E-01	0.0003111241	0.0036023328
76-44-8	1.44E-09	4.47523E-09	1.28E-01	5.804466E-05	0.0006716836
79-01-6	4.67E-08	5.11666E-08	1.46E-00	0.0006623894	0.0076832954
80-62-6	0.00E-00	0	0.00E-00	0	0
84-74-2	3.07E-09	7.14178E-09	2.04E-01	9.266668E-05	0.0010772313
84-66-2	1.42E-09	2.642E-09	7.54E-02	3.428068E-05	0.0003946769
87-86-5	6.43E-11	1.42965E-10	4.08E-03	1.655028E-06	2.147018E-05
87-68-3	2.36E-08	5.12695E-08	1.46E-00	0.0006663237	0.0076999507
87-61-6	0.00E-00	0	0.00E-00	0	0
88-85-7	1.36E-09	2.7176E-09	7.76E-02	3.526117E-05	0.0004081121
91-57-6	0.00E-00	0	0.00E-00	0	0
91-20-3	6.82E-09	7.29335E-09	2.08E-01	9.463143E-05	0.0010945294
95-94-3	0.00E-00	0	0.00E-00	0	0
98-86-2	2.77E-06	2.78467E-06	7.95E-01	0.0003613119	0.0041981929
99-87-6	0.00E-00	0	0.00E-00	0	0
100-51-6	0.00E-00	0	0.00E-00	0	0
107-21-1	0.00E-00	0	0.00E-00	0	0
108-95-2	2.05E-09	1.60707E-09	4.59E-02	2.083273E-05	0.0002411345
108-88-3	6.67E-08	5.17824E-08	1.46E-00	0.0006665405	0.0077101446
120-82-1	3.37E-08	5.10229E-08	1.46E-00	0.0006662038	0.0077662477
122-66-7	0.00E-00	0	0.00E-00	0	0
122-39-4	1.66E-09	2.33936E-09	6.68E-02	3.035396E-05	0.0003351318
129-00-0	2.10E-08	3.54211E-08	1.01E-00	0.0004596	0.00531944
131-11-3	0.00E-00	0	0.00E-00	0	0
132-64-9	1.41E-07	1.97889E-07	5.65E-00	0.0025676666	0.0297918351
156-59-2	0.00E-00	0	0.00E-00	0	0
218-01-9	8.92E-09	1.69946E-08	4.85E-01	0.0006202051	0.0002552196
309-00-2	4.59E-10	1.39646E-09	3.99E-02	1.811946E-05	0.0000209716
319-85-7	3.35E-12	8.12988E-12	2.32E-04	1.054888E-07	1.220922E-06
334-32-1	0.00E-00	0	0.00E-00	0	0
603-34-9	7.72E-09	1.57976E-08	4.51E-01	0.0002049478	0.0023724736
4170-30-3	9.90E-09	5.79024E-09	1.65E-01	7.513201E-05	0.0008699562
10061-01-5	5.55E-08	5.13791E-08	1.47E-00	0.0006666459	0.0077159964
23950-58-5	0.00E-00	0	0.00E-00	0	0
38380-08-4	2.58E-11	7.75674E-11	2.21E-03	1.006416E-06	1.164886E-05
100-21-0	1.46E-13	2.02784E-13	5.79E-06	2.631118E-09	3.045335E-08
106-93-4	1.45E-07	2.27177E-07	6.48E-00	0.0029476695	0.0341128845
106-97-8	1.06E-07	3.13233E-08	1.47E-00	0.0006665934	0.0077707587
106-99-0	3.14E-07	5.13233E-08	1.47E-00	0.0006665931	0.0077707517
108-87-2	6.24E-08	5.11591E-08	1.46E-00	0.0006663805	0.0077682921
110-54-3	7.13E-08	5.12816E-08	1.46E+00	0.0006665395	0.0077701328
110-82-7	7.29E-08	5.12359E-08	1.46E+00	0.0006664802	0.0077694464
111-84-2	4.80E-08	5.13517E-08	1.47E-00	0.0006666304	0.0077118851
115-74-1	2.07E-09	4.91768E-09	1.40E-01	6.380884E-05	0.0007738523
120-52-7	7.27E-08	1.08195E-07	3.09E+00	0.0014038865	0.0162498441
127-18-4	3.71E-08	5.13928E-08	1.47E-00	0.0006666837	0.0077718021
1336-36-3	1.45E-07	3.89316E-07	1.11E-01	0.0050551489	0.0584663306
144-62-7	1.40E-13	1.05295E-13	3.01E-06	1.366517E-09	1.581225E-08
208-96-8	1.26E-07	1.60626E-07	4.59E+00	0.0020884173	0.0241223374
50-32-8	1.48E-11	3.10783E-11	8.87E-04	4.03258E-07	4.667245E-06
56-23-5	4.01E-08	5.14682E-08	1.47E-00	0.0006667816	0.00772935
60-35-5	2.96E-11	1.45745E-11	4.16E-04	1.891099E-07	2.188765E-06
60-57-1	6.65E-11	2.11462E-10	6.04E-03	2.743785E-06	3.175675E-05
62-75-9	1.96E-08	1.17883E-08	3.37E-01	0.0005152956	0.0017703126
73-12-7	2.35E-11	8.46051E-12	2.41E-04	1.097772E-07	1.270315E-06
76-13-1	2.98E-08	5.12555E-08	1.46E-00	0.0006665055	0.0076974
8001-35-2	4.51E-11	1.55781E-10	4.45E-03	2.021015E-06	2.339478E-05
88-89-1	2.36E-13	4.55733E-13	1.30E-05	5.912377E-09	6.844075E-08
526-73-8	2.61E-10	8.01694E-10	2.29E-02	1.040227E-05	0.0001203196

Component	Aqueous Components mol/L	Lb/gal	Lb/day	Solid Components Lb/day	Total Components Lb/day	Kg/day	g/sec
CrO_4^{2-}	0.00E+00	0.00E+00	0.00E+00	6.60E-02	6.60E-02	3.000457E-05	0.0003473277
Formate	0.00E+00	0.00E+00	0.00E+00	1.32E-03	1.32E-03	5.986888E-07	6.929926E-06
Acetate	0.00E+00	0.00E+00	0.00E+00	7.24E-09	7.24E-09	3.291772E-12	3.809887E-11
Glycolate	0.00E+00	0.00E+00	0.00E+00	7.12E-04	7.12E-04	3.238533E-07	3.748335E-06
IDA	0.00E+00	0.00E+00	0.00E+00	3.68E-05	3.68E-05	1.673226E-08	1.936461E-07
Citrate	0.00E+00	0.00E+00	0.00E+00	1.46E-03	1.46E-03	6.657888E-07	7.706888E-06
HEDTA	0.00E+00	0.00E+00	0.00E+00	1.03E-03	1.03E-03	4.697288E-07	5.436665E-06
EDTA	0.00E+00	0.00E+00	0.00E+00	1.85E-05	1.85E-05	8.429991E-09	9.756841E-08

Table A-4 PJV04 Stream Report

River Protection Project - Waste Treatment Plant

Stream Number: PJV04
Stream Name: Vapor feed to demister
Configuration: 0
0
Run Data File: H:\Working Folder 11 (Vishal)\Emissions_Case2_Run4_SubEm\HAQ_03_054_run1_Streams.csv
Run Date / Time: 4/15/2003 - 6:40:10 AM

Stream Properties Variable	Value	Units
Density	3.16E-03	g/cm³
Enthalpy	-7.83E-06	BTU/hr
Mass Flow	1.52E+05	Lb/hr
	3.65E+06	Lb/day
Volumetric Flow	2.62E+05	GPM
Molar Flow	5.30E+03	Lbmol/hr
Volumetric Flow	3.50E+04	ft³/min
Molecular Weight	2.87E+01	Lb/Lbmol
Pressure	1.00E+03	mbar
Temperature	2.50E+01	C
Viscosity	1.83E-02	cP
Na Molarity	0.00E+00	mol/L
pH	#NUM!	pH
Total TRU	5.47E-11	Ci/L
Total Activity	1.03E-08	Ci/L

Gaseous Components (1) Component	mol/L	Lb/day	Mt/day
CO	1.20E-27	1.05E-19	4.79109E-23
CO_2	5.28E-13	7.32E-08	3.32582E-08
H_2O	5.72E-04	3.25E+04	14.75494908
NO	1.16E-32	1.10E-24	4.98335E-28
NO_2	3.35E-34	4.85E-26	2.20602E-29
N_2	3.14E-02	2.77E+06	1260.313993
O_2	8.36E-03	8.42E+05	382.6816086
SO_2	4.25E-33	8.58E-25	3.897946E-28
NH_3	4.68E-11	2.51E-03	1.14081E-06
HNO_3	2.30E-11	4.57E-03	2.07167E-06
HCl	1.17E-44	1.34E-36	6.10866E-40
HF	2.53E-83	1.60E-75	7.25621E-79

(1) All radionuclides in gaseous streams are assumed to exist as solid particulate.

Component	Aqueous Components mol/L	Lb/gal	Lb/day	Solid Components Lb/day	Total Component Lb/day	mt/day	g/sec
Total	0.00E+00	0.00E+00	0.00E+00	5.96E+00	5.96E+00	0.002710504	0.03137157
Ag^+	0.00E+00	0.00E+00	0.00E+00	1.19E-03	1.19E-03	5.4102E-07	6.2618E-06
Al^{+3}	0.00E+00	0.00E+00	0.00E+00	2.17E-01	2.17E-01	9.8667E-05	0.00114198
As^{+3}	0.00E+00	0.00E+00	0.00E+00	4.63E-01	4.63E-01	0.000210383	0.002434986
B^{+3}	0.00E+00	0.00E+00	0.00E+00	7.11E-03	7.11E-03	3.23396E-06	3.74301E-05
Ba^{+2}	0.00E+00	0.00E+00	0.00E+00	6.83E-03	6.83E-03	3.10419E-06	3.59281E-05
Be^{+2}	0.00E+00	0.00E+00	0.00E+00	5.23E-03	5.23E-03	2.37877E-06	2.75321E-05
CaO_2^{-2}	0.00E+00	0.00E+00	0.00E+00	6.32E-01	6.32E-01	0.000287319	0.003325449
Ca^{+2}	0.00E+00	0.00E+00	0.00E+00	5.81E-02	5.81E-02	2.64153E-05	0.000305733
Cd^{+2}	0.00E+00	0.00E+00	0.00E+00	2.07E-02	2.07E-02	9.3864E-06	0.000108639
Ce^{+3}	0.00E+00	0.00E+00	0.00E+00	4.79E-03	4.79E-03	2.17732E-06	2.52004E-05
Cl^-	0.00E+00	0.00E+00	0.00E+00	5.16E-02	5.16E-02	2.34656E-05	0.000271593
CO_3^{-2}	0.00E+00	0.00E+00	0.00E+00	3.12E-01	3.12E-01	0.000141932	0.00164273
Cr^{+3}	0.00E+00	0.00E+00	0.00E+00	3.14E-02	3.14E-02	1.42677E-05	0.000165135
Cu^{+2}	0.00E+00	0.00E+00	0.00E+00	1.09E-03	1.09E-03	4.96037E-07	5.74117E-06
F^-	0.00E+00	0.00E+00	0.00E+00	6.86E-02	6.86E-02	3.11823E-05	0.000360906
Fe^{+3}	0.00E+00	0.00E+00	0.00E+00	5.81E-02	5.81E-02	2.64126E-05	0.000305702
H^+	0.00E+00	0.00E+00	0.00E+00		0.00E+00	0	0
H_2O	0.00E+00	0.00E+00	0.00E+00		0.00E+00	0	0
Hg^{+2}	0.00E+00	0.00E+00	0.00E+00	3.66E-03	3.66E-03	1.66269E-06	1.92441E-05
K^+	0.00E+00	0.00E+00	0.00E+00	2.10E-01	2.10E-01	9.54319E-05	0.001104536
La^{+3}	0.00E+00	0.00E+00	0.00E+00	4.10E-03	4.10E-03	1.86136E-06	2.15437E-05
Li^+	0.00E+00	0.00E+00	0.00E+00	1.48E-03	1.48E-03	6.74453E-07	7.80617E-06
Mg^{+2}	0.00E+00	0.00E+00	0.00E+00	4.40E-03	4.40E-03	1.99913E-06	2.31383E-05
Mn^{+2}	0.00E+00	0.00E+00	0.00E+00	1.71E-02	1.71E-02	7.79026E-06	9.01651E-05
MnO_4^-	0.00E+00	0.00E+00	0.00E+00		0.00E+00	0	0
Na^+	0.00E+00	0.00E+00	0.00E+00	7.46E-01	7.46E-01	0.000339074	0.003924468
NH_4^+	0.00E+00	0.00E+00	0.00E+00	0.00E+00	0.00E+00	0	0
Ni^{+2}	0.00E+00	0.00E+00	0.00E+00	8.61E-03	8.61E-03	3.91324E-06	4.52921E-05
NO_2^-	0.00E+00	0.00E+00	0.00E+00	2.70E-01	2.70E-01	0.000122849	0.001421868
NO_3^-	0.00E+00	0.00E+00	0.00E+00	1.42E+00	1.42E+00	0.000647567	0.00749499
O^{-2}				1.64E-01	1.64E-01	7.46284E-05	0.000863755
OH^-	0.00E+00	0.00E+00	0.00E+00	7.99E-01	7.99E-01	0.000363358	0.004205533
OH(b)$^-$	0.00E+00	0.00E+00	0.00E+00		0.00E+00	0	0
P^{-3}				5.39E-10	5.39E-10	2.44953E-13	2.83509E-12
Pb^{+2}	0.00E+00	0.00E+00	0.00E+00	5.67E-03	5.67E-03	2.57661E-06	2.98219E-05
Pd^{+2}	0.00E+00	0.00E+00	0.00E+00	2.09E-04	2.09E-04	9.5195E-08	1.10179E-06
PO_4^{-3}	0.00E+00	0.00E+00	0.00E+00	1.98E-01	1.98E-01	9.00342E-05	0.001042062
S^{-2}				1.64E-09	1.64E-09	7.43287E-13	8.60286E-12
Si^{+4}				3.32E-02	3.32E-02	1.50745E-05	0.000174473
SiO_4^{-4}	0.00E+00	0.00E+00	0.00E+00		0.00E+00	0	0
SO_4^{-2}	0.00E+00	0.00E+00	0.00E+00	1.03E-01	1.03E-01	4.66699E-05	0.000540161
Sr^{+2}	0.00E+00	0.00E+00	0.00E+00	8.67E-04	8.67E-04	3.93912E-07	4.55917E-06
Ti^{+4}	0.00E+00	0.00E+00	0.00E+00	5.26E-03	5.26E-03	2.39152E-06	2.76796E-05
Zn^{+2}	0.00E+00	0.00E+00	0.00E+00	2.03E-03	2.03E-03	9.22881E-07	1.06815E-05
Zr^{+4}	0.00E+00	0.00E+00	0.00E+00	2.24E-02	2.24E-02	1.0173E-05	0.000117744

Rad. Component	Aqueous Rad. Components Ci/L	Ci/day	Lb/day	Solids Rad. Components (1) Ci/L	Ci/day	Lb/day	Total Rad. Components (1) Ci/L	Ci/day	Lb/day
Total	0.00E+00	0.00E+00	0.00E+00	1.03E-08	1.47E-01	3.56E-02	1.03E-08	1.47E-01	3.56E-02
^{241}Am	0	0.00E+00	0.00E+00	4.07E-11	5.81E-02	3.74E-05	4.07E-11	5.81E-02	3.74E-05
^{14}C	0.00E+00	0.00E+00	0.00E+00	6.89E-14	9.84E-05	4.86E-08	6.89E-14	9.84E-05	4.86E-08
^{60}Co	0.00E+00	0.00E+00	0.00E+00	4.60E-12	6.57E-03	1.28E-08	4.60E-12	6.57E-03	1.28E-08
^{243}Cm	0.00E+00	0.00E+00	0.00E+00	1.35E-12	1.93E-03	8.43E-08	1.35E-12	1.93E-03	8.43E-08
^{244}Cm	0.00E+00	0.00E+00	0.00E+00	1.01E-12	1.45E-03	3.95E-08	1.01E-12	1.45E-03	3.95E-08
^{137}Cs	0.00E+00	0.00E+00	0.00E+00	5.34E-09	7.62E+00	1.94E-04	5.34E-09	7.62E+00	1.94E-04
^{152}Eu	0.00E+00	0.00E+00	0.00E+00	5.42E-13	7.74E-04	9.82E-09	5.42E-13	7.74E-04	9.82E-09
^{154}Eu	0.00E+00	0.00E+00	0.00E+00	2.45E-11	3.50E-02	2.86E-07	2.45E-11	3.50E-02	2.86E-07
^{155}Eu	0.00E+00	0.00E+00	0.00E+00	1.49E-11	2.13E-02	9.68E-08	1.49E-11	2.13E-02	9.68E-08
^{3}H	0.00E+00	0.00E+00	0.00E+00	5.81E-13	8.30E-04	1.90E-10	5.81E-13	8.30E-04	1.90E-10
^{129}I	0.00E+00	0.00E+00	0.00E+00	9.09E-16	1.30E-06	1.62E-05	9.09E-16	1.30E-06	1.62E-05
^{94}Nb	0.00E+00	0.00E+00	0.00E+00	2.75E-12	3.92E-03	1.52E-07	2.75E-12	3.92E-03	1.52E-07
^{93m}Nb	0.00E+00	0.00E+00	0.00E+00	3.36E-14	4.79E-05	1.50E-04	3.36E-14	4.79E-05	1.50E-04
^{238}Pu	0.00E+00	0.00E+00	0.00E+00	1.58E-13	2.26E-04	2.91E-08	1.58E-13	2.26E-04	2.91E-08

^{239}Pu	0.00E+00	0.00E+00	0.00E+00	1.40E-12	2.01E-03	7.13E-05	1.40E-12	2.01E-03	7.13E-05
^{240}Pu	0.00E+00	0.00E+00	0.00E+00	7.77E-14	1.11E-04	1.08E-06	7.77E-14	1.11E-04	1.08E-06
^{241}Pu	0.00E+00	0.00E+00	0.00E+00	9.95E-12	1.42E-02	3.04E-07	9.95E-12	1.42E-02	3.04E-07
^{125}Sb	0.00E+00	0.00E+00	0.00E+00	1.95E-11	2.79E-02	5.92E-08	1.95E-11	2.79E-02	5.92E-08
^{126}Sn	0.00E+00	0.00E+00	0.00E+00	1.07E-10	1.53E-01	1.28E-05	1.07E-10	1.53E-01	1.28E-05
^{126}Sn	0.00E+00	0.00E+00	0.00E+00	1.05E-13	1.50E-04	2.91E-05	1.05E-13	1.50E-04	2.91E-05
^{90}Sr	0.00E+00	0.00E+00	0.00E+00	4.74E-09	6.77E-00	1.08E-04	4.74E-09	6.77E-00	1.08E-04
^{99}Tc	0.00E+00	0.00E+00	0.00E+00	1.29E-11	1.84E-02	2.40E-03	1.29E-11	1.84E-02	2.40E-03
^{232}Th	0.00E+00	0.00E+00	0.00E+00	4.92E-16	7.03E-07	1.41E-02	4.92E-16	7.03E-07	1.41E-02
^{233}U	0.00E+00	0.00E+00	0.00E+00	2.98E-15	4.25E-06	9.73E-07	2.98E-15	4.25E-06	9.73E-07
^{234}U	0.00E+00	0.00E+00	0.00E+00	2.97E-15	4.24E-06	1.51E-06	2.97E-15	4.24E-06	1.51E-06
^{235}U	0.00E+00	0.00E+00	0.00E+00	1.71E-16	2.44E-07	2.49E-04	1.71E-16	2.44E-07	2.49E-04
^{236}U	0.00E+00	0.00E+00	0.00E+00	2.19E-16	3.13E-07	1.07E-05	2.19E-16	3.13E-07	1.07E-05
^{238}U	0.00E+00	0.00E+00	0.00E+00	1.94E-15	2.78E-06	1.82E-02	1.94E-15	2.78E-06	1.82E-02

Component	Organic Components				
(CAS)	mol/L	Lb/gal	Lb/day	Mt/day	g/sec
Total	7.94E-12	1.07E-11	8.54E-03	3.87965E-06	4.49033E-05
57-14-7	1.05E-12	5.28316E-13	1.99E-04	9.06058E-08	1.04868E-06
58-90-2	2.86E-13	5.53412E-13	2.09E-04	9.49098E-08	1.09849E-06
58-89-9	1.08E-15	2.63158E-15	9.93E-07	4.51313E-10	5.22353E-09
71-43-2	6.07E-14	3.9563E-14	1.49E-05	6.78502E-09	7.85303E-08
75-69-4	0.00E+00	0	0.00E+00	0	0
75-05-8	4.12E-13	1.41031E-13	5.32E-05	2.41868E-08	2.79994E-07
76-44-8	1.66E-15	5.18252E-15	1.96E-06	8.88798E-10	1.02867E-08
79-01-6	3.57E-14	3.91873E-14	1.48E-05	6.72059E-09	7.77844E-08
80-62-6	0.00E+00	0	0.00E+00	0	0
84-74-2	4.09E-13	9.50503E-13	3.59E-04	1.63301E-07	1.8867E-06
84-66-2	5.22E-13	9.67668E-13	3.65E-04	1.65954E-07	1.92077E-06
87-86-5	6.40E-13	1.42297E-12	5.37E-04	2.44039E-07	2.82452E-06
87-68-3	1.60E-14	3.92433E-14	1.48E-05	6.73102E-09	7.78958E-08
87-61-6	0.00E+00	0	0.00E+00	0	0
88-85-7	8.05E-13	1.61406E-12	6.09E-04	2.76861E-07	3.20381E-06
91-57-6	0.00E+00	0	0.00E+00	0	0
91-20-3	6.85E-15	7.32591E-15	2.76E-06	1.25639E-09	1.45415E-08
95-94-3	0.00E+00	0	0.00E+00	0	0
98-86-2	5.39E-13	5.4157E-13	2.04E-04	9.28789E-08	1.07499E-06
99-87-6	0.00E+00	0	0.00E+00	0	0
100-51-6	0.00E+00	0	0.00E+00	0	0
107-21-1	0.00E+00	0	0.00E+00	0	0
108-95-2	1.42E-12	1.11334E-12	4.20E-04	1.90937E-07	2.20992E-06
108-88-3	5.14E-14	3.94995E-14	1.49E-05	6.77413E-09	7.84043E-08
120-82-1	2.77E-14	4.19707E-14	1.58E-05	7.19794E-09	8.33095E-08
122-66-7	0.00E+00	0	0.00E+00	0	0
122-39-4	1.00E-13	1.41879E-13	5.35E-05	2.43321E-08	2.81622E-07
129-00-0	4.20E-13	7.09312E-13	2.68E-04	1.21647E-07	1.40793E-06
131-11-3	0.00E+00	0	0.00E+00	0	0
132-64-9	1.90E-13	2.67255E-13	1.01E-04	4.5834E-08	5.30486E-07
156-59-2	0.00E+00	0	0.00E+00	0	0
218-01-9	3.99E-13	7.60867E-13	2.87E-04	1.30488E-07	1.51028E-06
309-00-2	2.84E-15	8.64963E-15	3.26E-06	1.4834E-09	1.7169E-08
319-85-7	1.95E-15	4.72742E-15	1.78E-06	8.10749E-10	9.38367E-09
534-52-1	0.00E+00	0	0.00E+00	0	0
603-34-9	2.90E-13	5.92935E-13	2.24E-04	1.01688E-07	1.17694E-06
4170-30-3	2.06E-13	1.20594E-13	4.55E-05	2.06819E-08	2.39373E-07
10061-01-5	4.38E-14	4.05993E-14	1.53E-05	6.96275E-09	8.05874E-08
23950-58-5	0.00E+00	0	0.00E+00	0	0
38380-08-4	1.04E-15	3.12843E-15	1.18E-06	5.36523E-10	6.20976E-09
100-21-0	1.05E-12	1.46086E-12	5.51E-04	2.50538E-07	2.89972E-06
106-93-4	1.32E-13	2.06525E-13	7.79E-05	3.54189E-08	4.09941E-07
106-97-8	8.01E-14	3.88355E-14	1.47E-05	6.66026E-09	7.70863E-08
106-99-0	8.62E-14	3.8894E-14	1.47E-05	6.6703E-09	7.72025E-08
108-87-2	4.72E-14	3.87173E-14	1.46E-05	6.63998E-09	7.68516E-08
110-54-3	5.40E-14	3.88017E-14	1.46E-05	6.65446E-09	7.70192E-08
110-82-7	5.52E-14	3.87957E-14	1.46E-05	6.65334E-09	7.70074E-08
111-84-2	3.63E-14	3.88535E-14	1.47E-05	6.66334E-09	7.7122E-08
118-74-1	1.68E-15	3.98944E-15	1.51E-06	6.84186E-10	7.91882E-09
120-12-7	2.71E-13	4.03298E-13	1.52E-04	6.91653E-08	8.00525E-07
127-18-4	2.83E-14	3.91479E-14	1.48E-05	6.71383E-09	7.77064E-08
1336-36-3	2.51E-13	6.74137E-13	2.54E-04	1.15614E-07	1.33812E-06
144-62-7	1.95E-13	1.46254E-13	5.52E-05	2.50825E-08	2.90307E-07
208-96-8	2.57E-13	3.26487E-13	1.23E-04	5.59923E-08	6.48059E-07
50-32-8	8.30E-15	1.74692E-14	6.59E-06	2.99595E-09	3.46753E-08
56-23-5	3.05E-14	3.911E-14	1.48E-05	6.70734E-09	7.76312E-08
60-35-5	6.47E-13	3.18948E-13	1.20E-04	5.46993E-08	6.33093E-07
60-57-1	1.58E-15	5.0144E-15	1.89E-06	8.59965E-10	9.9533E-09
62-75-9	2.21E-12	1.36612E-12	5.15E-04	2.34288E-07	2.71167E-06
75-12-7	3.88E-12	1.45666E-12	5.50E-04	2.49817E-07	2.8914E-06
76-15-3	3.01E-14	3.87801E-14	1.46E-05	6.65076E-09	7.69764E-08
8001-35-2	1.75E-15	6.04898E-15	2.28E-06	1.03739E-09	1.20069E-08
88-89-1	2.71E-12	5.18279E-12	1.96E-03	8.88844E-07	1.02875E-05
126-73-8	5.71E-13	1.26794E-12	4.78E-04	2.1745E-07	2.51679E-06

Component	Aqueous Components mol/L	Lb/gal	Lb/day	Solid Components Lb/day	Total Components Lb/day	Mt/day	g/sec
$C_2O_4^{-2}$	0.00E+00	0.00E+00	0.00E+00	6.32E-01	6.32E-01	0.000287319	0.003325449
Formate	0.00E+00	0.00E+00	0.00E+00	1.23E-02	1.23E-02	5.59381E-06	6.47432E-05
Acetate	0.00E+00	0.00E+00	0.00E+00	4.47E-08	4.47E-08	2.03191E-11	2.35175E-10
Glycolate	0.00E+00	0.00E+00	0.00E+00	6.66E-03	6.66E-03	3.02588E-06	3.50218E-05
EDA	0.00E+00	0.00E+00	0.00E+00	3.49E-04	3.49E-04	1.58634E-07	1.83604E-06
Citrate	0.00E+00	0.00E+00	0.00E+00	1.39E-02	1.39E-02	6.31253E-06	7.30617E-05
HEDTA	0.00E+00	0.00E+00	0.00E+00	9.80E-03	9.80E-03	4.45365E-06	5.15469E-05
EDTA	0.00E+00	0.00E+00	0.00E+00	1.76E-04	1.76E-04	7.98662E-08	9.24378E-07

Table A-5 LMP06 Stream Report

River Protection Project - Waste Treatment Plant

Stream Number: LMP06
Stream Name: melter offgas (primary)
Configuration: 0
0
Run Data File: H:\Working Folder (((Vishal)\Emissions_Case2_Rev4_SubEn\MAQ_03_054_run3_Streams.csv
Run Date / Time: 4/18/2003 - 6:40:10 AM

Stream Properties		
Variable	Value	Units
Density	4.52E-04	g/cm³
Enthalpy	-1.19E-07	BTU/hr
Mass Flow	6.50E-03	Lb/hr
	1.56E-05	Lb/day
Volumetric Flow	2.80E+04	SCFM
Molar Flow	2.46E-02	Lbmol/hr
Volumetric Flow	3.74E-03	ft³/min
Molecular Weight	2.58E-01	Lb/Lbmol
Pressure	9.83E+02	mbar
Temperature	4.00E+02	C
Viscosity	3.19E-02	cP
Na Molarity	0.00E+00	mol/L
pH	NA/NM	pH
Total TRU	5.92E-11	Ci/L
Total Activity	2.35E-07	Ci/L

Gaseous Components (1)			
Component	mol/L	Lb/day	Mt/day
CO	1.29E-03	1.21E-02	0.005504333
CO_2	1.29E-03	1.90E+04	8.64810066
H_2O	7.10E-03	4.31E+04	19.56830477
NO	4.27E-04	4.28E+03	1.936049184
NO_2	3.84E-05	5.95E+02	0.27046549
N_2	6.48E-03	6.10E+04	27.74728371
O_2	2.19E-03	2.33E+04	10.70377218
SO_2	1.13E-05	2.47E+02	0.112215827
NH_3	1.19E-07	6.81E-01	0.000309968
HNO_3	2.25E-59	6.90E-52	3.13442E-53
HCl	1.98E-05	2.43E-02	0.110393746
Hf	9.64E-06	4.49E-01	0.029495321

(1) All radionuclides in gaseous streams are assumed to exist as solid particulate.

Component	Aqueous Components mol/L	Lb/gal	Lb/day	Solid Components Lb/day	Total Component Lb/day	Mt/day	g/sec
Total	0.00E+00	0.00E+00	0.00E+00	3.67E+03	3.67E+03	1.666530781	19.31308774
Ag^+	0.00E+00	0.00E+00	0.00E+00	1.27E-01	1.27E-01	5.785441E-05	0.000669612
Al^{+3}	0.00E+00	0.00E+00	0.00E+00	3.47E+01	3.47E+01	0.015790516	0.1827606
As^{+3}	0.00E+00	0.00E+00	0.00E+00	1.21E-02	1.21E-02	5.479910033	6.341551107
B^{+3}	0.00E+00	0.00E+00	0.00E+00	1.20E+02	1.20E+02	0.05441381B	0.630464
Ba^{+2}	0.00E+00	0.00E+00	0.00E+00	3.94E-03	3.94E-03	1.790603E-05	0.000207179
Bi^{+3}	0.00E+00	0.00E+00	0.00E+00	1.21E-01	1.21E-01	5.504175E-05	0.000637123
ClO_4^{-1}	0.00E+00	0.00E+00	0.00E+00	5.45E-02	5.45E-02	0.247670974	2.866562202
Ca^{+2}	0.00E+00	0.00E+00	0.00E+00	6.38E+01	6.38E+01	0.028899546	0.334465464
Ce^{+3}	0.00E+00	0.00E+00	0.00E+00	1.42E+01	1.42E+01	0.006439439	0.074570548
Cs^{+1}	0.00E+00	0.00E+00	0.00E+00	1.66E-01	1.66E-01	7.56349E-05	0.000875404
Cl	0.00E+00	0.00E+00	0.00E+00	8.00E+01	8.00E+01	0.036353115	0.420776792
CO_3^{-2}	0.00E+00	0.00E+00	0.00E+00	0.00E+00	0.00E+00	0	0
Cr^{+3}	0.00E+00	0.00E+00	0.00E+00	2.99E-00	2.99E-00	0.001357237	0.015708767
Cu^{+2}	0.00E+00	0.00E+00	0.00E+00	2.00E-02	2.00E-02	9.088795E-06	0.000105194
F	0.00E+00	0.00E+00	0.00E+00	1.24E+02	1.24E+02	0.056287724	0.651478284
Fe^{+3}	0.00E+00	0.00E+00	0.00E+00	2.05E+01	2.05E+01	0.009340679	0.108109707
H^+	0.00E+00	0.00E+00	0.00E+00		0.00E+00	0	0
H_2O	0.00E+00	0.00E+00	0.00E+00		0.00E+00	0	0
Hg^{+2}	0.00E+00	0.00E+00	0.00E+00	4.78E-00	4.78E-00	0.002172791	0.025148686
K	0.00E+00	0.00E+00	0.00E+00	1.05E-02	1.05E-02	0.047893411	0.554381889
La^{+3}	0.00E+00	0.00E+00	0.00E+00	6.67E-02	6.67E-02	3.03367E-05	0.000351119
Li^+	0.00E+00	0.00E+00	0.00E+00	2.08E+01	2.08E+01	0.009437133	0.109619592
Mg^{+2}	0.00E+00	0.00E+00	0.00E+00	7.77E-00	7.77E-00	0.003531568	0.040874634
Mn^{+2}	0.00E+00	0.00E+00	0.00E+00	1.02E+00	1.02E+00	0.000465502	0.005388776
MnO_4^-	0.00E+00	0.00E+00	0.00E+00		0.00E+00	0	0
Na^+	0.00E+00	0.00E+00	0.00E+00	7.02E+01	7.02E+01	0.031923141	0.369480796
NH_4^+	0.00E+00	0.00E+00	0.00E+00	0.00E+00	0.00E+00	0	0
Ni^{+2}	0.00E+00	0.00E+00	0.00E+00	5.71E-01	5.71E-01	0.000259838	0.003003507
NO_2^-	0.00E+00	0.00E+00	0.00E+00	0.00E+00	0.00E+00	0	0
NO_3^-	0.00E+00	0.00E+00	0.00E+00	0.00E+00	0.00E+00	0	0
O^{-2}				9.87E+02	9.87E+02	0.448457025	5.190637792
OH^-	0.00E+00	0.00E+00	0.00E+00	0.00E+00	0.00E+00	0	0
$OH(b)^-$	0.00E+00	0.00E+00	0.00E+00		0.00E+00	0	0
P^{+5}				1.47E+01	1.47E+01	0.00667376	0.077239949
Pb^{+2}	0.00E+00	0.00E+00	0.00E+00	2.01E-01	2.01E-01	9.12777E-05	0.001056455
Pd^{+2}	0.00E+00	0.00E+00	0.00E+00	1.21E-03	1.21E-03	5.50347E-07	6.36976E-06
PO_4^{-3}	0.00E+00	0.00E+00	0.00E+00	0.00E+00	0.00E+00	0	0
S^{-2}				0.00E+00	0.00E+00	0	0
Si^{+4}				7.98E+01	7.98E+01	0.036232978	0.419594657
SiO_3^{-2}	0.00E+00	0.00E+00	0.00E+00		0.00E+00	0	0
SO_4^{-2}	0.00E+00	0.00E+00	0.00E+00	0.00E+00	0.00E+00	0	0
Sr^{+2}	0.00E+00	0.00E+00	0.00E+00	1.21E-02	1.21E-02	5.51301E-06	6.38088E-05
Y^{+3}	0.00E+00	0.00E+00	0.00E+00	1.33E+02	1.33E+02	0.060829966	0.701715713
Zn^{+2}	0.00E+00	0.00E+00	0.00E+00	2.70E-01	2.70E-01	0.012278687	0.142114436
Zr^{+4}	0.00E+00	0.00E+00	0.00E+00	8.21E-00	8.21E-00	0.003731395	0.043187438

Rad. Component	Aqueous Rad Components Ci/L	Ci/day	Lb/day	Solids Rad Components (1) Ci/L	Ci/day	Lb/day	Total Rad. Components (1) Ci/L	Ci/day	Lb/day
Total	0.00E+00	0.00E+00	0.00E+00	2.35E-07	3.56E+01	6.92E-01	2.35E-07	3.56E+01	6.92E-01
^{241}Am	0	0.00E+00	0.00E+00	4.28E-11	6.53E-03	4.20E-06	4.28E-11	6.53E-03	4.20E-06
^{14}C	0.00E+00	0.00E+00	0.00E+00	6.01E-09	9.17E-01	4.53E-04	6.01E-09	9.17E-01	4.53E-04
^{60}Co	0.00E+00	0.00E+00	0.00E+00	4.26E-11	6.51E-03	1.27E-08	4.26E-11	6.51E-03	1.27E-08
^{243}Cm	0.00E+00	0.00E+00	0.00E+00	1.14E-13	1.74E-05	7.57E-10	1.14E-13	1.74E-05	7.57E-10
^{244}Cm	0.00E+00	0.00E+00	0.00E+00	1.22E-13	1.87E-05	5.08E-10	1.22E-13	1.87E-05	5.08E-10
^{137}Cs	0.00E+00	0.00E+00	0.00E+00	3.04E-09	4.64E-01	1.18E-05	3.04E-09	4.64E-01	1.18E-05
^{152}Eu	0.00E+00	0.00E+00	0.00E+00	1.49E-10	2.28E-02	2.89E-07	1.49E-10	2.28E-02	2.89E-07
^{154}Eu	0.00E+00	0.00E+00	0.00E+00	4.95E-10	7.55E-02	6.16E-07	4.95E-10	7.55E-02	6.16E-07
^{155}Eu	0.00E+00	0.00E+00	0.00E+00	8.51E-10	1.30E-01	5.90E-07	8.51E-10	1.30E-01	5.90E-07
^{3}H	0.00E+00	0.00E+00	0.00E+00	2.94E-09	4.49E-01	1.03E-07	2.94E-09	4.49E-01	1.03E-07
^{129}I	0.00E+00	0.00E+00	0.00E+00	7.00E-11	1.07E-02	1.33E-01	7.00E-11	1.07E-02	1.33E-01
^{63}Ni	0.00E+00	0.00E+00	0.00E+00	6.14E-10	9.37E-02	3.64E-06	6.14E-10	9.37E-02	3.64E-06
^{237}Np	0.00E+00	0.00E+00	0.00E+00	1.84E-13	2.81E-05	8.79E-05	1.84E-13	2.81E-05	8.79E-05
^{239}Pu	0.00E+00	0.00E+00	0.00E+00	2.48E-13	3.79E-05	4.87E-09	2.48E-13	3.79E-05	4.87E-09

^{239}Pu	0.00E+00	0.00E+00	0.00E+00	2.90E-12	4.43E-04	1.57E-05	2.90E-12	4.43E-04	1.57E-05
^{240}Pu	0.00E+00	0.00E+00	0.00E+00	5.00E-13	7.63E-05	7.41E-07	5.00E-13	7.63E-05	7.41E-07
^{241}Pu	0.00E+00	0.00E+00	0.00E+00	1.24E-11	1.89E-03	4.04E-08	1.24E-11	1.89E-03	4.04E-08
^{125}Sb	0.00E+00	0.00E+00	0.00E+00	4.58E-09	6.99E-01	1.48E-06	4.58E-09	6.99E-01	1.48E-06
^{151}Sm	0.00E+00	0.00E+00	0.00E+00	2.83E-08	4.32E+00	3.62E-04	2.83E-08	4.32E-00	3.62E-04
^{126}Sn	0.00E+00	0.00E+00	0.00E+00	1.71E-11	2.61E-03	5.07E-04	1.71E-11	2.61E-03	5.07E-04
^{90}Sr	0.00E+00	0.00E+00	0.00E+00	1.85E-07	2.82E+01	4.50E-04	1.85E-07	2.82E+01	4.50E-04
^{99}Tc	0.00E+00	0.00E+00	0.00E+00	2.46E-09	3.75E-01	4.88E-02	2.46E-09	3.75E-01	4.88E-02
^{232}Th	0.00E+00	0.00E+00	0.00E+00	6.34E-14	9.67E-06	1.94E-01	6.34E-14	9.67E-06	1.94E-01
^{233}U	0.00E+00	0.00E+00	0.00E+00	1.18E-12	1.79E-04	4.11E-05	1.18E-12	1.79E-04	4.11E-05
^{234}U	0.00E+00	0.00E+00	0.00E+00	6.84E-13	1.04E-04	3.71E-05	6.84E-13	1.04E-04	3.71E-05
^{235}U	0.00E+00	0.00E+00	0.00E+00	2.64E-14	4.03E-06	4.11E-03	2.64E-14	4.03E-06	4.11E-03
^{236}U	0.00E+00	0.00E+00	0.00E+00	7.92E-14	1.21E-05	4.12E-04	7.92E-14	1.21E-05	4.12E-04
^{238}U	0.00E+00	0.00E+00	0.00E+00	5.09E-13	7.77E-05	5.10E-01	5.09E-13	7.77E-05	5.10E-01

Component (CAS)	Organic Components mol/L	Lb/gal	Lb/day	Mt/day	g/sec
Total	1.68E-07	2.77E-07	8.54E+01	0.038821907	0.449327624
57-14-7	2.95E-10	1.47957E-10	5.96E-03	2.71104E-06	3.13778E-05
58-90-2	1.52E-10	2.94053E-10	1.19E-02	5.38798E-06	6.23608E-05
58-89-9	9.55E-13	2.31886E-12	9.35E-05	4.24888E-08	4.91769E-07
71-43-2	0.00E+00	0	0.00E+00	0	0
75-69-4	0.00E+00	0	0.00E+00	0	0
75-05-8	1.22E-11	4.17293E-12	1.68E-04	7.64612E-08	8.84968E-07
76-44-8	0.00E+00	0	0.00E+00	0	0
79-01-6	0.00E+00	0	0.00E+00	0	0
80-62-6	0.00E+00	0	0.00E+00	0	0
84-74-2	3.73E-09	8.65613E-09	3.49E-01	0.000158607	0.001835733
84-66-2	1.35E-08	2.50083E-08	1.01E+00	0.00045823	0.005303585
87-86-5	4.83E-08	1.07313E-07	4.33E+00	0.001966309	0.022758203
87-68-3	0.00E+00	0	0.00E+00	0	0
87-61-6	0.00E+00	0	0.00E+00	0	0
88-85-7	4.41E-08	8.84721E-08	3.57E+00	0.001621086	0.018762571
91-57-6	0.00E+00	0	0.00E+00	0	0
91-20-3	0.00E+00	0	0.00E+00	0	0
95-94-3	0.00E+00	0	0.00E+00	0	0
98-86-2	2.11E-10	2.11877E-10	8.54E-03	3.88224E-06	4.49334E-05
99-87-6	0.00E+00	0	0.00E+00	0	0
100-51-6	0.00E+00	0	0.00E+00	0	0
107-21-1	0.00E+00	0	0.00E+00	0	0
108-95-2	5.65E-08	4.44025E-08	1.79E+00	0.000813593	0.00941658
108-88-3	0.00E+00	0	0.00E+00	0	0
120-82-1	0.00E+00	0	0.00E+00	0	0
122-66-7	0.00E+00	0	0.00E+00	0	0
122-39-4	2.93E-10	4.13642E-10	1.67E-02	7.57922E-06	8.77224E-05
129-00-0	1.27E-10	2.13706E-10	8.61E-03	3.91577E-06	4.53214E-05
131-11-3	0.00E+00	0	0.00E+00	0	0
132-64-9	1.73E-14	2.43288E-14	9.81E-07	4.4578E-10	5.15949E-09
156-59-2	0.00E+00	0	0.00E+00	0	0
218-01-9	5.94E-10	1.13199E-09	4.56E-02	2.07415E-05	0.000240064
309-00-2	1.82E-14	5.55198E-14	2.24E-06	1.0173E-09	1.17743E-08
319-85-7	6.04E-11	1.46559E-10	5.91E-03	2.68542E-06	3.10812E-05
534-52-1	0.00E+00	0	0.00E+00	0	0
603-34-9	3.79E-10	7.75727E-10	3.13E-02	1.42137E-05	0.000164511
4170-30-3	9.35E-11	5.46992E-11	2.20E-03	1.00226E-06	1.16002E-05
10061-01-5	0.00E+00	0	0.00E+00	0	0
23950-58-5	0.00E+00	0	0.00E+00	0	0
38380-08-4	7.34E-13	2.21146E-12	8.91E-05	4.05208E-08	4.68991E-07
100-21-0	8.45E-08	1.17118E-07	4.72E+00	0.002145978	0.024837705
106-93-4	3.06E-17	4.79137E-17	1.93E-09	8.7793E-13	1.01612E-11
106-97-8	0.00E+00	0	0.00E+00	0	0
106-99-0	0.00E+00	0	0.00E+00	0	0
108-87-2	0.00E+00	0	0.00E+00	0	0
110-54-3	0.00E+00	0	0.00E+00	0	0
110-82-7	0.00E+00	0	0.00E+00	0	0
111-84-2	0.00E+00	0	0.00E+00	0	0
118-74-1	0.00E+00	0	0.00E+00	0	0
120-12-7	2.71E-12	4.02945E-12	1.62E-04	7.38321E-08	8.54538E-07
127-18-4	0.00E+00	0	0.00E+00	0	0
L336-36-3	9.60E-17	2.58012E-16	1.04E-08	4.72759E-12	5.47175E-11
144-62-7	1.55E-08	1.16812E-08	4.71E-01	0.000214037	0.002477281
208-96-8	3.81E-13	4.83396E-13	1.95E-05	8.85732E-09	1.02515E-07
50-32-8	2.74E-10	5.76523E-10	2.32E-02	1.05637E-05	0.000122265
56-23-5	0.00E+00	0	0.00E+00	0	0
60-35-5	5.05E-08	2.48912E-08	1.00E+00	0.000456084	0.005278749
60-57-1	3.57E-13	1.13585E-12	4.58E-05	2.08124E-08	2.40884E-07
62-75-9	1.68E-08	1.03638E-08	4.18E-01	0.000189898	0.002197891
75-12-7	3.10E-07	1.16475E-07	4.70E+00	0.002134189	0.024701263
76-15-3	0.00E+00	0	0.00E+00	0	0
8001-35-2	1.15E-12	3.98938E-12	1.61E-04	7.3098E-08	8.46042E-07
88-89-1	8.16E-07	1.56037E-06	6.29E+01	0.028590876	0.330912918
126-73-8	3.23E-08	7.17133E-08	2.89E+00	0.001314012	0.015208472

Component	Aqueous Components mol/L	Lb/gal	Lb/day	Solid Components Lb/day	Total Component Lb/day	Mt/day	g/sec
$C_2O_4^{-2}$	0.00E+00	0.00E+00	0.00E+00	5.45E+02	5.45E+02	0.247670974	2.866562202
Formate	0.00E+00	0.00E+00	0.00E+00	1.04E+01	1.04E+01	0.004736494	0.054820534
Acetate	0.00E+00	0.00E+00	0.00E+00	1.92E-04	1.92E-04	8.74756E-08	1.01245E-06
Glycolate	0.00E+00	0.00E+00	0.00E+00	5.64E+00	5.64E+00	0.002562105	0.029653995
IDA	0.00E+00	0.00E+00	0.00E+00	3.08E-01	3.08E-01	0.000140105	0.00162159
Citrate	0.00E+00	0.00E+00	0.00E+00	1.23E+01	1.23E+01	0.005574523	0.064519947
HEDTA	0.00E+00	0.00E+00	0.00E+00	8.65E+00	8.65E+00	0.003932772	0.045518197
EDTA	0.00E+00	0.00E+00	0.00E+00	1.55E-01	1.55E-01	7.06076E-05	0.000817217

Table A-6 LFP06 Stream Report

River Protection Project - Waste Treatment Plant

Stream Number: LFP06
Stream Name: LAW LFP Vents
Configuration: 0
0
Run Data File: H:\Working Folder 11 (Vishal)\Emissions_Case2_Run4_SubEm\MRQ_03_054_run1_Streams.csv
Run Date / Time: 4/15/2003 - 6:40:10 AM

Stream Properties Variable	Value	Units
Density	1.13E-03	g/cm³
Enthalpy	-9.49E+04	BTU/hr
Mass Flow	6.15E-02	Lb/hr
	1.48E+04	Lb/day
Volumetric Flow	1.09E-03	GPM
Molar Flow	2.17E-01	Lbmol/hr
Volumetric Flow	1.46E-02	ft³/min
Molecular Weight	2.84E+01	Lb/Lbmol
Pressure	1.00E-03	mbar
Temperature	3.00E+01	C
Viscosity	1.84E-02	cP
Na Molarity	0.00E+00	mol/L
pH	#NUM!	pH
Total TRU	6.07E-15	Ci/L
Total Activity	1.29E-11	Ci/L

Gaseous Components (1) Component	mol/L	Lb/day	Mt/day
CO	2.55E-46	9.37E-41	4.26125E-44
CO_2	1.11E-35	6.38E-30	2.89892E-33
H_2O	1.69E-03	4.00E+02	0.181634522
NO	1.88E-54	7.39E-49	3.36058E-52
NO_2	2.19E-54	1.32E-48	5.99681E-52
N_2	3.00E-02	1.10E+04	5.008999025
O_2	7.98E-03	3.35E+03	1.520931938
SO_2	2.32E-52	1.95E-46	8.84358E-50
NH_3	6.11E-14	1.36E-08	6.1936E-12
HNO_3	9.26E-26	7.64E-20	3.47379E-23
HCl	4.01E-70	1.92E-64	8.70664E-68
HF	3.96E-75	1.04E-69	4.71821E-73

(1) All radionuclides in gaseous streams are assumed to exist as solid particulate.

Component	Aqueous Components mol/L	Lb/gal	Lb/day	Solid Components Lb/day	Total Component Lb/day	mt/day	g/sec
Total	0.00E+00	0.00E+00	0.00E+00	1.96E-03	1.96E-03	8.89907E-07	1.02998E-05
Ag^+	0.00E+00	0.00E+00	0.00E+00	7.64E-08	7.64E-08	3.47126E-11	4.01766E-10
Al^{+3}	0.00E+00	0.00E+00	0.00E+00	5.42E-05	5.42E-05	2.46361E-08	2.8514E-07
As^{+3}	0.00E+00	0.00E+00	0.00E+00	2.41E-05	2.41E-05	1.09582E-08	1.26831E-07
B^{+3}	0.00E+00	0.00E+00	0.00E+00	3.73E-05	3.73E-05	1.69745E-08	1.96464E-07
Ba^{+2}	0.00E+00	0.00E+00	0.00E+00	7.88E-08	7.88E-08	3.58005E-11	4.14358E-10
Br^{+1}	0.00E+00	0.00E+00	0.00E+00	2.42E-07	2.42E-07	1.10095E-10	1.27425E-09
$C_2O_4^{-2}$	0.00E+00	0.00E+00	0.00E+00	1.09E-04	1.09E-04	4.95342E-08	5.73312E-07
Ca^{+2}	0.00E+00	0.00E+00	0.00E+00	5.29E-05	5.29E-05	2.40251E-08	2.78068E-07
Cd^{+2}	0.00E+00	0.00E+00	0.00E+00	2.83E-06	2.83E-06	1.28789E-09	1.49061E-08
Ce^{+3}	0.00E+00	0.00E+00	0.00E+00	6.66E-07	6.66E-07	3.0254E-10	3.50162E-09
Cl^-	0.00E+00	0.00E+00	0.00E+00	1.20E-05	1.20E-05	5.46049E-09	6.32001E-08
CO_3^{-2}	0.00E+00	0.00E+00	0.00E+00	1.41E-04	1.41E-04	6.42793E-08	7.43973E-07
Cr^{+3}	0.00E+00	0.00E+00	0.00E+00	5.97E-06	5.97E-06	2.71448E-09	3.14175E-08
Cu^{+2}	0.00E+00	0.00E+00	0.00E+00	8.00E-08	8.00E-08	3.63552E-11	4.20777E-10
F^-	0.00E+00	0.00E+00	0.00E+00	1.48E-05	1.48E-05	6.74376E-09	7.80528E-08
Fe^{+3}	0.00E+00	0.00E+00	0.00E+00	4.29E-05	4.29E-05	1.95029E-08	2.25728E-07
H^+	0.00E+00	0.00E+00	0.00E+00		0.00E+00	0	0
H_2O	0.00E+00	0.00E+00	0.00E+00		0.00E+00	0	0
Hg^{+2}	0.00E+00	0.00E+00	0.00E+00	9.56E-08	9.56E-08	4.34559E-11	5.02961E-10
K^+	0.00E+00	0.00E+00	0.00E+00	4.21E-05	4.21E-05	1.91574E-08	2.21729E-07
Li^{+3}	0.00E+00	0.00E+00	0.00E+00	6.67E-08	6.67E-08	3.03367E-11	3.51119E-10
Li^+	0.00E+00	0.00E+00	0.00E+00	2.11E-05	2.11E-05	9.60011E-09	1.11112E-07
Mg^{+2}	0.00E+00	0.00E+00	0.00E+00	1.57E-05	1.57E-05	7.15404E-09	8.28014E-08
Mn^{+2}	0.00E+00	0.00E+00	0.00E+00	1.54E-06	1.54E-06	6.98254E-10	8.08164E-09
MnO_4^-	0.00E+00	0.00E+00	0.00E+00		0.00E+00	0	0
Na^+	0.00E+00	0.00E+00	0.00E+00	1.40E-04	1.40E-04	6.38463E-08	7.38962E-07
NH_4^+	0.00E+00	0.00E+00	0.00E+00	0.00E+00	0.00E+00	0	0
Ni^{+2}	0.00E+00	0.00E+00	0.00E+00	1.02E-06	1.02E-06	4.62156E-10	5.34902E-09
NO_2^-	0.00E+00	0.00E+00	0.00E+00	5.11E-05	5.11E-05	2.32177E-08	2.68724E-07
NO_3^-	0.00E+00	0.00E+00	0.00E+00	2.65E-04	2.65E-04	1.20593E-07	1.39576E-06
O^{-2}				4.43E-04	4.43E-04	2.01164E-07	2.32828E-06
OH^-	0.00E+00	0.00E+00	0.00E+00	1.22E-04	1.22E-04	5.54647E-08	6.41953E-07
$OH(b)^-$	0.00E+00	0.00E+00	0.00E+00		0.00E+00	0	0
P^{+5}				1.64E-14	1.64E-14	7.45198E-18	8.62498E-17
Pb^{+2}	0.00E+00	0.00E+00	0.00E+00	8.03E-07	8.03E-07	3.65111E-10	4.22582E-09
Pd^{+2}	0.00E+00	0.00E+00	0.00E+00	4.84E-09	4.84E-09	2.20139E-12	2.5479E-11
PO_4^{-3}	0.00E+00	0.00E+00	0.00E+00	3.60E-05	3.60E-05	1.63741E-08	1.89515E-07
S^{+6}				5.43E-17	5.43E-17	2.46602E-20	2.85419E-19
Si^{+4}				2.40E-04	2.40E-04	1.09306E-07	1.26511E-06
SiO_3^{-4}	0.00E+00	0.00E+00	0.00E+00		0.00E+00	0	0
SO_4^{-2}	0.00E+00	0.00E+00	0.00E+00	1.96E-05	1.96E-05	8.92436E-09	1.03291E-07
Sr^{+2}	0.00E+00	0.00E+00	0.00E+00	2.43E-08	2.43E-08	1.1026E-11	1.27616E-10
Ti^{+4}	0.00E+00	0.00E+00	0.00E+00	6.92E-06	6.92E-06	3.14762E-09	3.64308E-08
Zn^{+2}	0.00E+00	0.00E+00	0.00E+00	2.74E-05	2.74E-05	1.24349E-08	1.43922E-07
Zr^{+4}	0.00E+00	0.00E+00	0.00E+00	2.48E-05	2.48E-05	1.12737E-08	1.30482E-07

Rad. Component	Aqueous Rad. Components Ci/L	Ci/day	Lb/day	Solids Rad. Components (1) Ci/L	Ci/day	Lb/day	Total Rad. Components (1) Ci/L	Ci/day	Lb/day
Total	0.00E+00	0.00E+00	0.00E+00	1.29E-11	7.66E-05	2.84E-06	1.29E-11	7.66E-05	2.84E-06
^{241}Am	0	0.00E+00	0.00E+00	4.39E-15	2.61E-08	1.68E-11	4.39E-15	2.61E-08	1.68E-11
^{14}C	0.00E+00	0.00E+00	0.00E+00	3.09E-15	1.83E-08	9.05E-12	3.09E-15	1.83E-08	9.05E-12
^{60}Co	0.00E+00	0.00E+00	0.00E+00	4.38E-15	2.60E-08	5.07E-14	4.38E-15	2.60E-08	5.07E-14
^{243}Cm	0.00E+00	0.00E+00	0.00E+00	1.17E-17	6.94E-11	3.03E-15	1.17E-17	6.94E-11	3.03E-15
^{244}Cm	0.00E+00	0.00E+00	0.00E+00	1.26E-17	7.46E-11	2.03E-15	1.26E-17	7.46E-11	2.03E-15
^{137}Cs	0.00E+00	0.00E+00	0.00E+00	4.69E-14	2.79E-07	7.07E-12	4.69E-14	2.79E-07	7.07E-12
^{152}Eu	0.00E+00	0.00E+00	0.00E+00	1.53E-14	9.10E-08	1.15E-12	1.53E-14	9.10E-08	1.15E-12
^{154}Eu	0.00E+00	0.00E+00	0.00E+00	5.08E-14	3.02E-07	2.46E-12	5.08E-14	3.02E-07	2.46E-12
^{155}Eu	0.00E+00	0.00E+00	0.00E+00	8.74E-14	5.20E-07	2.36E-12	8.74E-14	5.20E-07	2.36E-12
^{3}H	0.00E+00	0.00E+00	0.00E+00	1.51E-15	8.99E-09	2.06E-15	1.51E-15	8.99E-09	2.06E-15
^{129}I	0.00E+00	0.00E+00	0.00E+00	3.95E-17	2.35E-10	2.93E-09	3.95E-17	2.35E-10	2.93E-09
^{63}Ni	0.00E+00	0.00E+00	0.00E+00	2.81E-14	1.67E-07	6.48E-12	2.81E-14	1.67E-07	6.48E-12
^{237}Np	0.00E+00	0.00E+00	0.00E+00	9.45E-18	5.62E-11	1.76E-10	9.45E-18	5.62E-11	1.76E-10
^{238}Pu	0.00E+00	0.00E+00	0.00E+00	2.55E-17	1.51E-10	1.95E-14	2.55E-17	1.51E-10	1.95E-14

^{239}Pu	0.00E+00	0.00E+00	0.00E+00	2.98E-16	1.77E-09	6.29E-13	2.98E-16	1.77E-09	6.29E-11
^{240}Pu	0.00E+00	0.00E+00	0.00E+00	5.14E-17	3.05E-10	2.96E-12	5.14E-17	3.05E-10	2.96E-12
^{241}Pu	0.00E+00	0.00E+00	0.00E+00	1.27E-15	7.55E-09	1.62E-13	1.27E-15	7.55E-09	1.62E-13
^{125}Sb	0.00E+00	0.00E+00	0.00E+00	2.35E-13	1.40E-06	2.97E-12	2.35E-13	1.40E-06	2.97E-12
^{151}Sm	0.00E+00	0.00E+00	0.00E+00	2.91E-12	1.73E-05	1.45E-09	2.91E-12	1.73E-05	1.45E-09
^{126}Sn	0.00E+00	0.00E+00	0.00E+00	1.76E-15	1.04E-08	2.03E-09	1.76E-15	1.04E-08	2.03E-09
^{90}Sr	0.00E+00	0.00E+00	0.00E+00	9.50E-12	5.64E-05	9.01E-10	9.50E-12	5.64E-05	9.01E-10
^{99}Tc	0.00E+00	0.00E+00	0.00E+00	3.79E-15	2.25E-08	2.93E-09	3.79E-15	2.25E-08	2.93E-09
^{232}Th	0.00E+00	0.00E+00	0.00E+00	6.51E-18	3.87E-11	7.75E-07	6.51E-18	3.87E-11	7.75E-07
^{233}U	0.00E+00	0.00E+00	0.00E+00	1.21E-16	7.18E-10	1.64E-10	1.21E-16	7.18E-10	1.64E-10
^{234}U	0.00E+00	0.00E+00	0.00E+00	7.03E-17	4.18E-10	1.48E-10	7.03E-17	4.18E-10	1.48E-10
^{235}U	0.00E+00	0.00E+00	0.00E+00	2.71E-18	1.61E-11	1.65E-08	2.71E-18	1.61E-11	1.65E-08
^{236}U	0.00E+00	0.00E+00	0.00E+00	8.13E-18	4.83E-11	1.65E-09	8.13E-18	4.83E-11	1.65E-09
^{238}U	0.00E+00	0.00E+00	0.00E+00	5.23E-17	3.11E-10	2.04E-06	5.23E-17	3.11E-10	2.04E-06

Component (CAS)	Organic Components mol/L	Lb/gal	Lb/day	Mt/day	g/sec
Total	9.51E-14	1.57E-13	1.88E-06	8.54082E-10	9.88521E-09
57-14-7	1.67E-16	8.35856E-17	1.31E-10	5.96428E-14	6.90311E-13
58-90-2	8.58E-17	1.6612E-16	2.61E-10	1.18535E-13	1.37194E-12
58-89-9	5.40E-19	1.31E-18	2.06E-12	9.34754E-16	1.08189E-14
71-43-2	0.00E+00	0	0.00E+00	0	0
75-69-4	0.00E+00	0	0.00E+00	0	0
75-05-8	6.88E-18	2.35742E-18	3.70E-12	1.68215E-15	1.94693E-14
76-44-8	0.00E+00	0	0.00E+00	0	0
79-01-6	0.00E+00	0	0.00E+00	0	0
80-62-6	0.00E+00	0	0.00E+00	0	0
84-74-2	2.11E-15	4.89011E-15	7.68E-09	3.48936E-12	4.03861E-11
84-66-2	7.62E-15	1.41279E-14	2.22E-08	1.00811E-11	1.16679E-10
87-86-5	2.73E-14	6.06244E-14	9.52E-08	4.32588E-11	5.0068E-10
87-68-3	0.00E+00	0	0.00E+00	0	0
87-61-6	0.00E+00	0	0.00E+00	0	0
88-85-7	2.49E-14	4.99806E-14	7.85E-08	3.56639E-11	4.12777E-10
91-57-6	0.00E+00	0	0.00E+00	0	0
91-20-3	0.00E+00	0	0.00E+00	0	0
95-94-3	0.00E+00	0	0.00E+00	0	0
98-86-2	1.19E-16	1.19696E-16	1.88E-10	8.54093E-14	9.88534E-13
99-87-6	0.00E+00	0	0.00E+00	0	0
100-51-6	0.00E+00	0	0.00E+00	0	0
107-21-1	0.00E+00	0	0.00E+00	0	0
108-95-2	3.19E-14	2.50843E-14	3.94E-08	1.7899E-11	2.07165E-10
108-88-3	0.00E+00	0	0.00E+00	0	0
120-82-1	0.00E+00	0	0.00E+00	0	0
122-66-7	0.00E+00	0	0.00E+00	0	0
122-39-4	1.65E-16	2.33679E-16	3.67E-10	1.66743E-13	1.92989E-12
129-00-0	7.15E-17	1.20729E-16	1.90E-10	8.61469E-14	9.97071E-13
131-11-3	0.00E+00	0	0.00E+00	0	0
132-64-9	9.79E-21	1.37441E-20	2.16E-14	9.80716E-18	1.13509E-16
156-59-2	0.00E+00	0	0.00E+00	0	0
218-01-9	3.36E-16	6.39493E-16	1.00E-09	4.56313E-13	5.2814E-12
309-00-2	1.03E-20	3.13649E-20	4.92E-14	2.23805E-17	2.59034E-16
319-85-7	3.41E-17	8.27956E-17	1.30E-10	5.90791E-14	6.83786E-13
534-52-1	0.00E+00	0	0.00E+00	0	0
603-34-9	2.14E-16	4.38232E-16	6.88E-10	3.12702E-13	3.61924E-12
4170-30-3	5.28E-17	3.09012E-17	4.85E-11	2.20497E-14	2.55205E-13
10061-01-5	0.00E+00	0	0.00E+00	0	0
23950-58-5	0.00E+00	0	0.00E+00	0	0
38380-08-4	4.15E-19	1.24932E-18	1.96E-12	8.91458E-16	1.03178E-14
100-21-0	4.77E-14	6.61638E-14	1.04E-07	4.72115E-11	5.4643E-10
106-93-4	1.73E-23	2.7068E-23	4.25E-17	1.93145E-20	2.23547E-19
106-97-8	0.00E+00	0	0.00E+00	0	0
106-99-0	0.00E+00	0	0.00E+00	0	0
108-87-2	0.00E+00	0	0.00E+00	0	0
110-54-3	0.00E+00	0	0.00E+00	0	0
110-82-7	0.00E+00	0	0.00E+00	0	0
111-84-2	0.00E+00	0	0.00E+00	0	0
118-74-1	0.00E+00	0	0.00E+00	0	0
120-12-7	1.53E-18	2.27636E-18	3.57E-12	1.62431E-15	1.87998E-14
127-18-4	0.00E+00	0	0.00E+00	0	0
1336-36-3	5.42E-23	1.45759E-22	2.29E-16	1.04007E-19	1.20379E-18
144-62-7	8.78E-15	6.5991E-15	1.04E-08	4.70882E-12	5.45002E-11
208-96-8	2.15E-19	2.73085E-19	4.29E-13	1.94861E-16	2.25534E-15
50-32-8	1.55E-16	3.25695E-16	5.11E-10	2.32401E-13	2.68983E-12
56-23-5	0.00E+00	0	0.00E+00	0	0
60-35-5	2.85E-14	1.40618E-14	2.21E-08	1.00338E-11	1.16132E-10
60-57-1	2.02E-19	6.41679E-19	1.01E-12	4.57873E-16	5.29946E-15
62-75-9	9.47E-15	5.85484E-15	9.19E-09	4.17775E-12	4.83536E-11
75-12-7	1.75E-13	6.58004E-14	1.03E-07	4.69522E-11	5.43428E-10
76-15-3	0.00E+00	0	0.00E+00	0	0
8001-35-2	6.52E-19	2.25373E-18	3.54E-12	1.60816E-15	1.86129E-14
88-89-1	4.61E-13	8.81501E-13	1.38E-06	6.28999E-10	7.28008E-09
126-73-8	1.82E-14	4.0513E-14	6.36E-08	2.89083E-11	3.34586E-10

Component	Aqueous Components mol/L	Lb/gal	Lb/day	Solid Components Lb/day	Total Component Lb/day	Mt/day	g/sec
$C_2O_4^{-2}$	0.00E+00	0.00E+00	0.00E+00	1.09E-04	1.09E-04	4.95342E-08	5.73312E-07
Formate	0.00E+00	0.00E+00	0.00E+00	2.08E-06	2.08E-06	9.47299E-10	1.09641E-08
Acetate	0.00E+00	0.00E+00	0.00E+00	3.85E-11	3.85E-11	1.74951E-14	2.0249E-13
Glycolate	0.00E+00	0.00E+00	0.00E+00	1.13E-06	1.13E-06	5.12421E-10	5.9308E-09
IDA	0.00E+00	0.00E+00	0.00E+00	6.16E-08	6.16E-08	2.80211E-11	3.24318E-10
Citrate	0.00E+00	0.00E+00	0.00E+00	2.45E-06	2.45E-06	1.1149E-09	1.2904E-08
HEDTA	0.00E+00	0.00E+00	0.00E+00	1.73E-06	1.73E-06	7.86554E-10	9.10364E-09
EDTA	0.00E+00	0.00E+00	0.00E+00	3.11E-08	3.11E-08	1.41215E-11	1.63443E-10

Table A-7 RLD32 Stream Report

River Protection Project - Waste Treatment Plant

Stream Number: RLD32
Stream Name: LAW SBS condensate vessel vent
Configuration: 0
0
Run Data File: H:\Working Folder 11 (Vishal)\Emissions_Case2_Run4_SubEm\MRQ_03_054_run1_Streams.csv
Run Date / Time: 4/15/2003 - 6:40:10 AM

Stream Properties		
Variable	Value	Units
Density	1.13E-03	g/cm³
Enthalpy	-1.44E+04	BTU/hr
Mass Flow	9.34E+01	Lb/hr
	2.24E+03	Lb/day
Volumetric Flow	1.66E+02	GPM
Molar Flow	3.29E+00	Lbmol/hr
Volumetric Flow	2.21E+01	ft³/min
Molecular Weight	2.84E+01	Lb/Lbmol
Pressure	1.00E+03	mbar
Temperature	3.00E+01	C
Viscosity	1.84E-02	cP
Na Molarity	0.00E+00	mol/L
pH	#NUM!	pH
Total TRU	9.99E-17	Ci/L
Total Activity	3.84E-13	Ci/L

Gaseous Components (1)			
Component	mol/L	Lb/day	Mt/day
CO	1.24E-28	6.90E-24	3.13659E-27
CO_2	2.69E-13	2.36E-08	1.07112E-11
H_2O	1.69E-03	6.07E+01	0.027582625
NO	0.00E+00	0.00E+00	0
NO_2	0.00E+00	0.00E+00	0
N_2	3.00E-02	1.67E+03	0.760655748
O_2	7.98E-03	5.08E+02	0.230965432
SO_2	0.00E+00	0.00E+00	0
NH_3	1.55E-13	5.26E-09	2.39298E-12
HNO_3	6.52E-26	8.18E-21	3.71733E-24
HCl	0.00E+00	0.00E+00	0
HF	0.00E+00	0.00E+00	0

(1) All radionuclides in gaseous streams are assumed to exist as solid particulate.

Component	Aqueous Components mol/L	Lb/gal	Lb/day	Solid Components Lb/day	Total Component Lb/day	mt/day	g/sec
Total	0.00E+00	0.00E+00	0.00E+00	3.16E-05	3.16E-05	1.43704E-08	1.66324E-07
Ag^+	0.00E+00	0.00E+00	0.00E+00	1.26E-09	1.26E-09	5.72115E-13	6.62171E-12
Al^{+3}	0.00E+00	0.00E+00	0.00E+00	3.47E-07	3.47E-07	1.5751E-10	1.82304E-09
As^{+3}	0.00E+00	0.00E+00	0.00E+00	1.19E-05	1.19E-05	5.42203E-09	6.27549E-08
B^{+3}	0.00E+00	0.00E+00	0.00E+00	1.19E-06	1.19E-06	5.42922E-10	6.28382E-09
Ba^{+2}	0.00E+00	0.00E+00	0.00E+00	3.93E-10	3.93E-10	1.78822E-13	2.0697E-12
Bi^{+3}	0.00E+00	0.00E+00	0.00E+00	1.20E-09	1.20E-09	5.43417E-13	6.28955E-12
$C_2O_4^{-2}$	0.00E+00	0.00E+00	0.00E+00	0.00E+00	0.00E+00	0	0
Co^{+2}	0.00E+00	0.00E+00	0.00E+00	6.33E-07	6.33E-07	2.8755E-10	3.32813E-09
Cd^{+2}	0.00E+00	0.00E+00	0.00E+00	1.41E-07	1.41E-07	6.38913E-11	7.39483E-10
Ce^{+3}	0.00E+00	0.00E+00	0.00E+00	1.66E-09	1.66E-09	7.54458E-13	8.73216E-12
Cl^-	0.00E+00	0.00E+00	0.00E+00	1.34E-06	1.34E-06	6.1005E-10	7.06077E-09
CO_3^{-2}	0.00E+00	0.00E+00	0.00E+00	1.28E-08	1.28E-08	5.79838E-12	6.71109E-11
Cr^{+3}	0.00E+00	0.00E+00	0.00E+00	2.91E-08	2.91E-08	1.32397E-11	1.53237E-10
Cu^{+2}	0.00E+00	0.00E+00	0.00E+00	1.98E-10	1.98E-10	8.98432E-14	1.03985E-12
F^-	0.00E+00	0.00E+00	0.00E+00	1.70E-06	1.70E-06	7.7107E-10	8.92442E-09
Fe^{+3}	0.00E+00	0.00E+00	0.00E+00	2.05E-07	2.05E-07	9.31733E-11	1.07839E-09
H^+	0.00E+00	0.00E+00	0.00E+00		0.00E+00	0	0
H_2O	0.00E+00	0.00E+00	0.00E+00		0.00E+00	0	0
Hg^{+2}	0.00E+00	0.00E+00	0.00E+00	3.98E-08	3.98E-08	1.81066E-11	2.09567E-10
K^+	0.00E+00	0.00E+00	0.00E+00	1.04E-06	1.04E-06	4.74239E-10	5.48887E-09
La^{+3}	0.00E+00	0.00E+00	0.00E+00	6.67E-10	6.67E-10	3.02973E-13	3.50663E-12
Li^+	0.00E+00	0.00E+00	0.00E+00	2.06E-07	2.06E-07	9.35838E-11	1.08315E-09
Mg^{+2}	0.00E+00	0.00E+00	0.00E+00	7.73E-08	7.73E-08	3.51391E-11	4.06703E-10
Mn^{+2}	0.00E+00	0.00E+00	0.00E+00	1.02E-08	1.02E-08	4.63951E-12	5.3698E-11
MnO_4^-	0.00E+00	0.00E+00	0.00E+00		0.00E+00	0	0
Na^+	0.00E+00	0.00E+00	0.00E+00	6.89E-07	6.89E-07	3.13092E-10	3.62375E-09
NH_4^+	0.00E+00	0.00E+00	0.00E+00	0.00E+00	0.00E+00	0	0
Ni^{+2}	0.00E+00	0.00E+00	0.00E+00	5.66E-09	5.66E-09	2.57438E-12	2.9796E-11
NO_2^-	0.00E+00	0.00E+00	0.00E+00	0.00E+00	0.00E+00	0	0
NO_3^-	0.00E+00	0.00E+00	0.00E+00	0.00E+00	0.00E+00	0	0
O^{-2}				9.55E-06	9.55E-06	4.34197E-09	5.02543E-08
OH^-	0.00E+00	0.00E+00	0.00E+00	0.00E+00	0.00E+00	0	0
$OH(b)^-$	0.00E+00	0.00E+00	0.00E+00		0.00E+00	0	0
P^{+5}				0.00E+00	0.00E+00	0	0
Pb^{+2}	0.00E+00	0.00E+00	0.00E+00	1.98E-09	1.98E-09	8.99549E-13	1.04114E-11
Pd^{+2}	0.00E+00	0.00E+00	0.00E+00	1.21E-11	1.21E-11	5.48971E-15	6.35383E-14
PO_4^{-3}	0.00E+00	0.00E+00	0.00E+00	0.00E+00	0.00E+00	0	0
S^{+6}				0.00E+00	0.00E+00	0	0
Si^{+4}				7.95E-07	7.95E-07	3.61321E-10	4.18196E-09
SiO_4^{-4}	0.00E+00	0.00E+00	0.00E+00		0.00E+00	0	0
SO_4^{-2}	0.00E+00	0.00E+00	0.00E+00	0.00E+00	0.00E+00	0	0
Sr^{+2}	0.00E+00	0.00E+00	0.00E+00	1.21E-10	1.21E-10	5.49923E-14	6.36485E-13
Ti^{+4}	0.00E+00	0.00E+00	0.00E+00	1.31E-06	1.31E-06	5.957E-10	6.89468E-09
Zn^{+2}	0.00E+00	0.00E+00	0.00E+00	2.69E-07	2.69E-07	1.22229E-10	1.41468E-09
Zr^{+4}	0.00E+00	0.00E+00	0.00E+00	8.18E-08	8.18E-08	3.71896E-11	4.30435E-10

Rad. Component	Aqueous Rad. Components Ci/L	Ci/day	Lb/day	Solids Rad. Components (1) Ci/L	Ci/day	Lb/day	Total Rad. Components (1) Ci/L	Ci/day	Lb/day
Total	0.00E+00	0.00E+00	0.00E+00	3.84E-13	3.46E-07	7.78E-09	3.84E-13	3.46E-07	7.78E-09
^{241}Am	0	0.00E+00	0.00E+00	7.22E-17	6.51E-11	4.19E-14	7.22E-17	6.51E-11	4.19E-14
^{14}C	0.00E+00	0.00E+00	0.00E+00	0.00E+00	0.00E+00	0.00E+00	0.00E+00	0.00E+00	0.00E+00
^{60}Co	0.00E+00	0.00E+00	0.00E+00	7.10E-17	6.41E-11	1.25E-16	7.10E-17	6.41E-11	1.25E-16
^{243}Cm	0.00E+00	0.00E+00	0.00E+00	1.92E-19	1.73E-13	7.55E-18	1.92E-19	1.73E-13	7.55E-18
^{244}Cm	0.00E+00	0.00E+00	0.00E+00	2.06E-19	1.86E-13	5.07E-18	2.06E-19	1.86E-13	5.07E-18
^{137}Cs	0.00E+00	0.00E+00	0.00E+00	5.07E-15	4.58E-09	1.16E-13	5.07E-15	4.58E-09	1.16E-13
^{152}Eu	0.00E+00	0.00E+00	0.00E+00	2.52E-16	2.27E-10	2.88E-15	2.52E-16	2.27E-10	2.88E-15
^{154}Eu	0.00E+00	0.00E+00	0.00E+00	8.34E-16	7.53E-10	6.14E-15	8.34E-16	7.53E-10	6.14E-15
^{155}Eu	0.00E+00	0.00E+00	0.00E+00	1.44E-15	1.30E-09	5.88E-15	1.44E-15	1.30E-09	5.88E-15
^{3}H	0.00E+00	0.00E+00	0.00E+00	3.44E-15	3.10E-09	7.12E-16	3.44E-15	3.10E-09	7.12E-16
^{129}I	0.00E+00	0.00E+00	0.00E+00	1.97E-17	1.78E-11	2.22E-10	1.97E-17	1.78E-11	2.22E-10
^{63}Ni	0.00E+00	0.00E+00	0.00E+00	1.03E-15	9.30E-10	3.61E-14	1.03E-15	9.30E-10	3.61E-14
^{237}Np	0.00E+00	0.00E+00	0.00E+00	3.10E-19	2.80E-13	8.77E-13	3.10E-19	2.80E-13	8.77E-13
^{238}Pu	0.00E+00	0.00E+00	0.00E+00	4.18E-19	3.78E-13	4.86E-17	4.18E-19	3.78E-13	4.86E-17

^{239}Pu	0.00E+00	0.00E+00	0.00E+00	4.89E-18	4.41E-12	1.57E-13	4.89E-18	4.41E-12	1.57E-13
^{240}Pu	0.00E+00	0.00E+00	0.00E+00	8.43E-19	7.61E-13	7.39E-15	8.43E-19	7.61E-13	7.39E-15
^{241}Pu	0.00E+00	0.00E+00	0.00E+00	2.09E-17	1.88E-11	4.03E-16	2.09E-17	1.88E-11	4.03E-16
^{125}Sb	0.00E+00	0.00E+00	0.00E+00	7.55E-15	6.82E-09	1.45E-14	7.55E-15	6.82E-09	1.45E-14
^{151}Sm	0.00E+00	0.00E+00	0.00E+00	4.77E-14	4.31E-08	3.61E-12	4.77E-14	4.31E-08	3.61E-12
^{126}Sn	0.00E+00	0.00E+00	0.00E+00	2.89E-17	2.61E-11	5.06E-12	2.89E-17	2.61E-11	5.06E-12
^{90}Sr	0.00E+00	0.00E+00	0.00E+00	3.12E-13	2.82E-07	4.49E-12	3.12E-13	2.82E-07	4.49E-12
^{99}Tc	0.00E+00	0.00E+00	0.00E+00	4.11E-15	3.71E-09	4.82E-10	4.11E-15	3.71E-09	4.82E-10
^{232}Th	0.00E+00	0.00E+00	0.00E+00	1.07E-19	9.65E-14	1.93E-09	1.07E-19	9.65E-14	1.93E-09
^{233}U	0.00E+00	0.00E+00	0.00E+00	1.98E-18	1.79E-12	4.10E-13	1.98E-18	1.79E-12	4.10E-13
^{234}U	0.00E+00	0.00E+00	0.00E+00	1.15E-18	1.04E-12	3.70E-13	1.15E-18	1.04E-12	3.70E-13
^{235}U	0.00E+00	0.00E+00	0.00E+00	4.46E-20	4.02E-14	4.10E-11	4.46E-20	4.02E-14	4.10E-11
^{236}U	0.00E+00	0.00E+00	0.00E+00	1.34E-19	1.21E-13	4.11E-12	1.34E-19	1.21E-13	4.11E-12
^{238}U	0.00E+00	0.00E+00	0.00E+00	8.59E-19	7.75E-13	5.08E-09	8.59E-19	7.75E-13	5.08E-09

Component (CAS)	Organic Components mol/L	Lb/gal	Lb/day	Mr/day	g/sec
Total	8.21E-14	1.66E-13	6.67E-07	3.03395E-10	3.51152E-09
57-14-7	0.00E+00	0	0.00E+00	0	0
58-90-2	0.00E+00	0	0.00E+00	0	0
58-89-9	1.61E-18	3.91222E-18	9.33E-13	4.23923E-16	4.90651E-15
71-43-2	0.00E+00	0	0.00E+00	0	0
75-69-4	0.00E+00	0	0.00E+00	0	0
75-05-8	0.00E+00	0	0.00E+00	0	0
76-44-8	0.00E+00	0	0.00E+00	0	0
79-01-6	0.00E+00	0	0.00E+00	0	0
80-62-6	0.00E+00	0	0.00E+00	0	0
84-74-2	6.29E-15	1.4604E-14	3.48E-09	1.58247E-12	1.83156E-11
84-66-2	0.00E+00	0	0.00E+00	0	0
87-86-5	0.00E+00	0	0.00E+00	0	0
87-68-3	0.00E+00	0	0.00E+00	0	0
87-61-6	0.00E+00	0	0.00E+00	0	0
88-85-7	7.45E-14	1.49264E-13	3.56E-08	1.6174E-11	1.87199E-10
91-57-6	0.00E+00	0	0.00E+00	0	0
91-20-3	0.00E+00	0	0.00E+00	0	0
95-94-3	0.00E+00	0	0.00E+00	0	0
98-86-2	0.00E+00	0	0.00E+00	0	0
99-87-6	0.00E+00	0	0.00E+00	0	0
100-51-6	0.00E+00	0	0.00E+00	0	0
107-21-1	0.00E+00	0	0.00E+00	0	0
108-95-2	0.00E+00	0	0.00E+00	0	0
108-88-3	0.00E+00	0	0.00E+00	0	0
120-82-1	0.00E+00	0	0.00E+00	0	0
122-66-7	0.00E+00	0	0.00E+00	0	0
122-39-4	0.00E+00	0	0.00E+00	0	0
129-00-0	2.14E-16	3.6055E-16	8.60E-11	3.90687E-14	4.52184E-13
131-11-3	0.00E+00	0	0.00E+00	0	0
132-64-9	0.00E+00	0	0.00E+00	0	0
156-59-2	0.00E+00	0	0.00E+00	0	0
218-01-9	1.00E-15	1.90981E-15	4.55E-10	2.06944E-13	2.39518E-12
309-00-2	3.08E-20	9.36691E-20	2.23E-14	1.01499E-17	1.17475E-16
319-85-7	1.02E-16	2.47264E-16	5.89E-11	2.67931E-14	3.10106E-13
534-52-1	0.00E+00	0	0.00E+00	0	0
603-34-9	0.00E+00	0	0.00E+00	0	0
4170-30-3	0.00E+00	0	0.00E+00	0	0
10061-01-5	0.00E+00	0	0.00E+00	0	0
23950-58-5	0.00E+00	0	0.00E+00	0	0
38380-08-4	1.24E-18	3.73101E-18	8.89E-13	4.04287E-16	4.67925E-15
100-21-0	0.00E+00	0	0.00E+00	0	0
106-93-4	0.00E+00	0	0.00E+00	0	0
106-97-8	0.00E+00	0	0.00E+00	0	0
106-99-0	0.00E+00	0	0.00E+00	0	0
108-87-2	0.00E+00	0	0.00E+00	0	0
110-54-3	0.00E+00	0	0.00E+00	0	0
110-82-7	0.00E+00	0	0.00E+00	0	0
111-84-2	0.00E+00	0	0.00E+00	0	0
118-74-1	0.00E+00	0	0.00E+00	0	0
120-12-7	0.00E+00	0	0.00E+00	0	0
127-18-4	0.00E+00	0	0.00E+00	0	0
1336-36-3	1.62E-22	4.353E-22	1.04E-16	4.71685E-20	5.45932E-19
144-62-7	0.00E+00	0	0.00E+00	0	0
208-96-8	4.66E-56	5.91757E-56	1.41E-50	6.41219E-54	7.42152E-53
50-32-8	4.62E-16	9.72668E-16	2.32E-10	1.05397E-13	1.21987E-12
56-23-5	0.00E+00	0	0.00E+00	0	0
60-35-5	0.00E+00	0	0.00E+00	0	0
60-57-1	6.03E-19	1.91633E-18	4.57E-13	2.07651E-16	2.40337E-15
62-75-9	0.00E+00	0	0.00E+00	0	0
75-12-7	0.00E+00	0	0.00E+00	0	0
76-15-3	0.00E+00	0	0.00E+00	0	0
8001-35-2	1.95E-18	6.73061E-18	1.60E-12	7.29319E-16	8.44119E-15
88-89-1	1.38E-12	2.63255E-12	6.28E-07	2.85259E-10	3.30161E-09
126-73-8	0.00E+00	0	0.00E+00	0	0

Component	Aqueous Components mol/L	Lb/gal	Lb/day	Solid Components Lb/day	Total Component Lb/day	Mr/day	g/sec
$C_2O_4^{-2}$	0.00E+00	0.00E+00	0.00E+00	0.00E+00	0.00E+00	0	0
Formate	0.00E+00	0.00E+00	0.00E+00	0.00E+00	0.00E+00	0	0
Acetate	0.00E+00	0.00E+00	0.00E+00	0.00E+00	0.00E+00	0	0
Glycolate	0.00E+00	0.00E+00	0.00E+00	0.00E+00	0.00E+00	0	0
IDA	0.00E+00	0.00E+00	0.00E+00	0.00E+00	0.00E+00	0	0
Citrate	0.00E+00	0.00E+00	0.00E+00	0.00E+00	0.00E+00	0	0
HEDTA	0.00E+00	0.00E+00	0.00E+00	0.00E+00	0.00E+00	0	0
EDTA	0.00E+00	0.00E+00	0.00E+00	0.00E+00	0.00E+00	0	0

Table A-8 RLD33 Stream Report

River Protection Project - Waste Treatment Plant

Stream Number: RLD33
Stream Name: LAW Plant wash vessel vent
Configuration: 0
0
Run Data File: H:\Working Folder 11 (Vishal)\Emissions_Case2_Run4_SubEm\MRQ_03_054_run1_Streams.csv
Run Date / Time: 4/15/2003 - 6:40:10 AM

Stream Properties		
Variable	Value	Units
Density	1.13E-03	g/cm³
Enthalpy	-3.83E+02	BTU/hr
Mass Flow	2.48E+00	Lb/hr
	5.96E+01	Lb/day
Volumetric Flow	4.40E+00	GPM
Molar Flow	8.75E-02	Lbmol/hr
Volumetric Flow	5.89E-01	ft³/min
Molecular Weight	2.84E+01	Lb/Lbmol
Pressure	1.00E+03	mbar
Temperature	3.00E+01	C
Viscosity	1.84E-02	cP
Na Molarity	0.00E+00	mol/L
pH	#NUM!	pH
Total TRU	0.00E+00	Ci/L
Total Activity	0.00E+00	Ci/L

Gaseous Components (1)			
Component	mol/L	Lb/day	Mt/day
CO	0.00E+00	0.00E+00	0
CO_2	0.00E+00	0.00E+00	0
H_2O	1.69E-03	1.61E+00	0.00073358
NO	0.00E+00	0.00E+00	0
NO_2	0.00E+00	0.00E+00	0
N_2	3.00E-02	4.45E+01	0.020230206
O_2	7.98E-03	1.35E+01	0.006142698
SO_2	0.00E+00	0.00E+00	0
NH_3	0.00E+00	0.00E+00	0
HNO_3	0.00E+00	0.00E+00	0
HCl	0.00E+00	0.00E+00	0
HF	0.00E+00	0.00E+00	0

(1) All radionuclides in gaseous streams are assumed to exist as solid particulate.

	Aqueous Components			Solid Components	Total Component		
Component	mol/L	Lb/gal	Lb/day	Lb/day	Lb/day	mt/day	g/sec
Total	0.00E+00	0.00E+00	0.00E+00	0.00E+00	0.00E+00	0	0
Ag^{+}	0.00E+00	0.00E+00	0.00E+00	0.00E+00	0.00E+00	0	0
Al^{+3}	0.00E+00	0.00E+00	0.00E+00	0.00E+00	0.00E+00	0	0
As^{+3}	0.00E+00	0.00E+00	0.00E+00	0.00E+00	0.00E+00	0	0
B^{+3}	0.00E+00	0.00E+00	0.00E+00	0.00E+00	0.00E+00	0	0
Ba^{+2}	0.00E+00	0.00E+00	0.00E+00	0.00E+00	0.00E+00	0	0
Bi^{+3}	0.00E+00	0.00E+00	0.00E+00	0.00E+00	0.00E+00	0	0
$C_2O_4^{-2}$	0.00E+00	0.00E+00	0.00E+00	0.00E+00	0.00E+00	0	0
Ca^{+2}	0.00E+00	0.00E+00	0.00E+00	0.00E+00	0.00E+00	0	0
Cd^{+2}	0.00E+00	0.00E+00	0.00E+00	0.00E+00	0.00E+00	0	0
Ce^{+3}	0.00E+00	0.00E+00	0.00E+00	0.00E+00	0.00E+00	0	0
Cl^{-}	0.00E+00	0.00E+00	0.00E+00	0.00E+00	0.00E+00	0	0
CO_3^{-2}	0.00E+00	0.00E+00	0.00E+00	0.00E+00	0.00E+00	0	0
Cr^{+3}	0.00E+00	0.00E+00	0.00E+00	0.00E+00	0.00E+00	0	0
Cu^{+2}	0.00E+00	0.00E+00	0.00E+00	0.00E+00	0.00E+00	0	0
F^{-}	0.00E+00	0.00E+00	0.00E+00	0.00E+00	0.00E+00	0	0
Fe^{+3}	0.00E+00	0.00E+00	0.00E+00	0.00E+00	0.00E+00	0	0
H^{+}	0.00E+00	0.00E+00	0.00E+00		0.00E+00	0	0
H_2O	0.00E+00	0.00E+00	0.00E+00		0.00E+00	0	0
Hg^{+2}	0.00E+00	0.00E+00	0.00E+00	0.00E+00	0.00E+00	0	0
K^{+}	0.00E+00	0.00E+00	0.00E+00	0.00E+00	0.00E+00	0	0
La^{+3}	0.00E+00	0.00E+00	0.00E+00	0.00E+00	0.00E+00	0	0
Li^{+}	0.00E+00	0.00E+00	0.00E+00	0.00E+00	0.00E+00	0	0
Mg^{+2}	0.00E+00	0.00E+00	0.00E+00	0.00E+00	0.00E+00	0	0
Mn^{+3}	0.00E+00	0.00E+00	0.00E+00	0.00E+00	0.00E+00	0	0
MnO_4^{-}	0.00E+00	0.00E+00	0.00E+00		0.00E+00	0	0
Na^{+}	0.00E+00	0.00E+00	0.00E+00	0.00E+00	0.00E+00	0	0
NH_4^{+}	0.00E+00	0.00E+00	0.00E+00	0.00E+00	0.00E+00	0	0
Ni^{+2}	0.00E+00	0.00E+00	0.00E+00	0.00E+00	0.00E+00	0	0
NO_3	0.00E+00	0.00E+00	0.00E+00	0.00E+00	0.00E+00	0	0
NO_3^{-}	0.00E+00	0.00E+00	0.00E+00	0.00E+00	0.00E+00	0	0
O^{-2}				0.00E+00	0.00E+00	0	0
OH^{-}	0.00E+00	0.00E+00	0.00E+00	0.00E+00	0.00E+00	0	0
$OH(b)^{-}$	0.00E+00	0.00E+00	0.00E+00		0.00E+00	0	0
P^{+5}				0.00E+00	0.00E+00	0	0
Pb^{+2}	0.00E+00	0.00E+00	0.00E+00	0.00E+00	0.00E+00	0	0
Pd^{+2}	0.00E+00	0.00E+00	0.00E+00	0.00E+00	0.00E+00	0	0
PO_4^{-3}	0.00E+00	0.00E+00	0.00E+00	0.00E+00	0.00E+00	0	0
S^{+4}				0.00E+00	0.00E+00	0	0
Si^{+4}				0.00E+00	0.00E+00	0	0
SiO_4^{-4}	0.00E+00	0.00E+00	0.00E+00		0.00E+00	0	0
SO_4^{-2}	0.00E+00	0.00E+00	0.00E+00	0.00E+00	0.00E+00	0	0
Sr^{+2}	0.00E+00	0.00E+00	0.00E+00	0.00E+00	0.00E+00	0	0
Tl^{+4}	0.00E+00	0.00E+00	0.00E+00	0.00E+00	0.00E+00	0	0
Zn^{+2}	0.00E+00	0.00E+00	0.00E+00	0.00E+00	0.00E+00	0	0
Zr^{+4}	0.00E+00	0.00E+00	0.00E+00	0.00E+00	0.00E+00	0	0

Rad.	Aqueous Rad. Components			Solids Rad. Components (1)			Total Rad. Components (1)		
Component	Ci/L	Ci/day	Lb/day	Ci/L	Ci/day	Lb/day	Ci/L	Ci/day	Lb/day
Total	0.00E+00	0.00E+00	0.00E+00	0.00E+00	0.00E+00	0.00E+00	0.00E+00	0.00E+00	0.00E+00
^{241}Am	0	0.00E+00	0.00E+00	0.00E+00	0.00E+00	0.00E+00	0.00E+00	0.00E+00	0.00E+00
^{14}C	0.00E+00	0.00E+00	0.00E+00	0.00E+00	0.00E+00	0.00E+00	0.00E+00	0.00E+00	0.00E+00
^{60}Co	0.00E+00	0.00E+00	0.00E+00	0.00E+00	0.00E+00	0.00E+00	0.00E+00	0.00E+00	0.00E+00
^{243}Cm	0.00E+00	0.00E+00	0.00E+00	0.00E+00	0.00E+00	0.00E+00	0.00E+00	0.00E+00	0.00E+00
^{244}Cm	0.00E+00	0.00E+00	0.00E+00	0.00E+00	0.00E+00	0.00E+00	0.00E+00	0.00E+00	0.00E+00
^{137}Cs	0.00E+00	0.00E+00	0.00E+00	0.00E+00	0.00E+00	0.00E+00	0.00E+00	0.00E+00	0.00E+00
^{152}Eu	0.00E+00	0.00E+00	0.00E+00	0.00E+00	0.00E+00	0.00E+00	0.00E+00	0.00E+00	0.00E+00
^{154}Eu	0.00E+00	0.00E+00	0.00E+00	0.00E+00	0.00E+00	0.00E+00	0.00E+00	0.00E+00	0.00E+00
^{155}Eu	0.00E+00	0.00E+00	0.00E+00	0.00E+00	0.00E+00	0.00E+00	0.00E+00	0.00E+00	0.00E+00
^{3}H	0.00E+00	0.00E+00	0.00E+00	0.00E+00	0.00E+00	0.00E+00	0.00E+00	0.00E+00	0.00E+00
^{129}I	0.00E+00	0.00E+00	0.00E+00	0.00E+00	0.00E+00	0.00E+00	0.00E+00	0.00E+00	0.00E+00
^{63}Ni	0.00E+00	0.00E+00	0.00E+00	0.00E+00	0.00E+00	0.00E+00	0.00E+00	0.00E+00	0.00E+00
^{237}Np	0.00E+00	0.00E+00	0.00E+00	0.00E+00	0.00E+00	0.00E+00	0.00E+00	0.00E+00	0.00E+00
^{238}Pu	0.00E+00	0.00E+00	0.00E+00	0.00E+00	0.00E+00	0.00E+00	0.00E+00	0.00E+00	0.00E+00

^{238}Pu	0.00E+00	0.00E+00	0.00E+00	0.00E+00	0.00E+00	0.00E+00	0.00E+00	0.00E+00	0.00E+00
^{240}Pu	0.00E+00	0.00E+00	0.00E+00	0.00E+00	0.00E+00	0.00E+00	0.00E+00	0.00E+00	0.00E+00
^{241}Pu	0.00E+00	0.00E+00	0.00E+00	0.00E+00	0.00E+00	0.00E+00	0.00E+00	0.00E+00	0.00E+00
^{125}Sb	0.00E+00	0.00E+00	0.00E+00	0.00E+00	0.00E+00	0.00E+00	0.00E+00	0.00E+00	0.00E+00
^{151}Sm	0.00E+00	0.00E+00	0.00E+00	0.00E+00	0.00E+00	0.00E+00	0.00E+00	0.00E+00	0.00E+00
^{126}Sn	0.00E+00	0.00E+00	0.00E+00	0.00E+00	0.00E+00	0.00E+00	0.00E+00	0.00E+00	0.00E+00
^{90}Sr	0.00E+00	0.00E+00	0.00E+00	0.00E+00	0.00E+00	0.00E+00	0.00E+00	0.00E+00	0.00E+00
^{99}Tc	0.00E+00	0.00E+00	0.00E+00	0.00E+00	0.00E+00	0.00E+00	0.00E+00	0.00E+00	0.00E+00
^{229}Th	0.00E+00	0.00E+00	0.00E+00	0.00E+00	0.00E+00	0.00E+00	0.00E+00	0.00E+00	0.00E+00
^{233}U	0.00E+00	0.00E+00	0.00E+00	0.00E+00	0.00E+00	0.00E+00	0.00E+00	0.00E+00	0.00E+00
^{234}U	0.00E+00	0.00E+00	0.00E+00	0.00E+00	0.00E+00	0.00E+00	0.00E+00	0.00E+00	0.00E+00
^{235}U	0.00E+00	0.00E+00	0.00E+00	0.00E+00	0.00E+00	0.00E+00	0.00E+00	0.00E+00	0.00E+00
^{238}U	0.00E+00	0.00E+00	0.00E+00	0.00E+00	0.00E+00	0.00E+00	0.00E+00	0.00E+00	0.00E+00
^{232}U	0.00E+00	0.00E+00	0.00E+00	0.00E+00	0.00E+00	0.00E+00	0.00E+00	0.00E+00	0.00E+00

Component (CAS)	Organic Components mol/L	Lb/gal	Lb/day	Mt/day	g/sec
Total	0.00E+00	0.00E+00	0.00E+00	0	0
57-14-7	0.00E+00	0	0.00E+00	0	0
58-90-2	0.00E+00	0	0.00E+00	0	0
58-89-9	0.00E+00	0	0.00E+00	0	0
71-43-2	0.00E+00	0	0.00E+00	0	0
75-69-4	0.00E+00	0	0.00E+00	0	0
75-05-8	0.00E+00	0	0.00E+00	0	0
76-44-8	0.00E+00	0	0.00E+00	0	0
79-01-6	0.00E+00	0	0.00E+00	0	0
80-62-6	0.00E+00	0	0.00E+00	0	0
84-74-2	0.00E+00	0	0.00E+00	0	0
84-66-2	0.00E+00	0	0.00E+00	0	0
87-86-5	0.00E+00	0	0.00E+00	0	0
87-68-3	0.00E+00	0	0.00E+00	0	0
87-61-6	0.00E+00	0	0.00E+00	0	0
88-85-7	0.00E+00	0	0.00E+00	0	0
91-57-6	0.00E+00	0	0.00E+00	0	0
91-20-3	0.00E+00	0	0.00E+00	0	0
95-94-3	0.00E+00	0	0.00E+00	0	0
98-86-2	0.00E+00	0	0.00E+00	0	0
99-87-6	0.00E+00	0	0.00E+00	0	0
100-51-6	0.00E+00	0	0.00E+00	0	0
107-21-1	0.00E+00	0	0.00E+00	0	0
108-95-2	0.00E+00	0	0.00E+00	0	0
108-88-3	0.00E+00	0	0.00E+00	0	0
120-82-1	0.00E+00	0	0.00E+00	0	0
122-66-7	0.00E+00	0	0.00E+00	0	0
122-39-4	0.00E+00	0	0.00E+00	0	0
129-00-0	0.00E+00	0	0.00E+00	0	0
131-11-3	0.00E+00	0	0.00E+00	0	0
132-64-9	0.00E+00	0	0.00E+00	0	0
156-59-2	0.00E+00	0	0.00E+00	0	0
218-01-9	0.00E+00	0	0.00E+00	0	0
309-00-2	0.00E+00	0	0.00E+00	0	0
319-85-7	0.00E+00	0	0.00E+00	0	0
534-52-1	0.00E+00	0	0.00E+00	0	0
603-34-9	0.00E+00	0	0.00E+00	0	0
4170-30-3	0.00E+00	0	0.00E+00	0	0
10061-01-5	0.00E+00	0	0.00E+00	0	0
23950-58-5	0.00E+00	0	0.00E+00	0	0
38380-08-4	0.00E+00	0	0.00E+00	0	0
100-21-0	0.00E+00	0	0.00E+00	0	0
106-93-4	0.00E+00	0	0.00E+00	0	0
106-97-8	0.00E+00	0	0.00E+00	0	0
106-99-0	0.00E+00	0	0.00E+00	0	0
108-87-2	0.00E+00	0	0.00E+00	0	0
110-54-3	0.00E+00	0	0.00E+00	0	0
110-82-7	0.00E+00	0	0.00E+00	0	0
111-84-2	0.00E+00	0	0.00E+00	0	0
118-74-1	0.00E+00	0	0.00E+00	0	0
120-12-7	0.00E+00	0	0.00E+00	0	0
127-18-4	0.00E+00	0	0.00E+00	0	0
1336-36-3	0.00E+00	0	0.00E+00	0	0
144-62-7	0.00E+00	0	0.00E+00	0	0
208-96-8	0.00E+00	0	0.00E+00	0	0
50-32-8	0.00E+00	0	0.00E+00	0	0
56-23-5	0.00E+00	0	0.00E+00	0	0
60-35-5	0.00E+00	0	0.00E+00	0	0
60-57-1	0.00E+00	0	0.00E+00	0	0
62-75-9	0.00E+00	0	0.00E+00	0	0
75-12-7	0.00E+00	0	0.00E+00	0	0
76-15-3	0.00E+00	0	0.00E+00	0	0
8001-35-2	0.00E+00	0	0.00E+00	0	0
88-89-1	0.00E+00	0	0.00E+00	0	0
126-73-8	0.00E+00	0	0.00E+00	0	0

Component	Aqueous Components mol/L	Lb/gal	Lb/day	Solid Components Lb/day	Total Component Lb/day	Mt/day	g/sec
$C_2O_4^{-2}$	0.00E+00	0.00E+00	0.00E+00	0.00E+00	0.00E+00	0	0
Formate	0.00E+00	0.00E+00	0.00E+00	0.00E+00	0.00E+00	0	0
Acetate	0.00E+00	0.00E+00	0.00E+00	0.00E+00	0.00E+00	0	0
Glycolate	0.00E+00	0.00E+00	0.00E+00	0.00E+00	0.00E+00	0	0
IDA	0.00E+00	0.00E+00	0.00E+00	0.00E+00	0.00E+00	0	0
Citrate	0.00E+00	0.00E+00	0.00E+00	0.00E+00	0.00E+00	0	0
HEDTA	0.00E+00	0.00E+00	0.00E+00	0.00E+00	0.00E+00	0	0
EDTA	0.00E+00	0.00E+00	0.00E+00	0.00E+00	0.00E+00	0	0

Table A-9 RLD34 Stream Report

River Protection Project - Waste Treatment Plant

Stream Number: RLD34
Stream Name: LAW C3/C5 drain/sump collection vessel vent
Configuration: 0
0
Run Data File: H:\Working Folder 11 (Vishal)\Emissions_Case2_Run4_SubEm\MRQ_03_054_run1_Streams.csv
Run Date / Time: 4/15/2003 - 6:40:10 AM

Stream Properties Variable	Value	Units
Density	1.13E-03	g/cm³
Enthalpy	-3.83E+02	BTU/hr
Mass Flow	2.48E+00	Lb/hr
	5.96E+01	Lb/day
Volumetric Flow	4.40E+00	GPM
Molar Flow	8.75E-02	Lbmol/hr
Volumetric Flow	5.89E-01	ft³/min
Molecular Weight	2.84E+01	Lb/Lbmol
Pressure	1.00E+03	mbar
Temperature	3.00E+01	C
Viscosity	1.84E-02	cP
Na Molarity	0.00E+00	mol/L
pH	#NUM!	pH
Total TRU	8.47E-17	Ci/L
Total Activity	5.03E-13	Ci/L

Gaseous Components (1) Component	mol/L	Lb/day	Mt/day
CO	4.66E-27	6.90E-24	3.13659E-27
CO_2	3.51E-12	8.17E-09	3.7132E-12
H_2O	1.69E-03	1.61E+00	0.00073358
NO	0.00E+00	0.00E+00	0
NO_2	0.00E+00	0.00E+00	0
N_2	3.00E-02	4.45E+01	0.020230206
O_2	7.98E-03	1.35E+01	0.006142698
SO_2	0.00E+00	0.00E+00	0
NH_3	1.72E-13	1.55E-10	7.03857E-14
HNO_3	1.33E-24	4.42E-21	2.01068E-24
HCl	0.00E+00	0.00E+00	0
HF	0.00E+00	0.00E+00	0

(1) All radionuclides in gaseous streams are assumed to exist as solid particulate.

Component	Aqueous Components mol/L	Lb/gal	Lb/day	Solid Components Lb/day	Total Component Lb/day	mt/day	g/sec
Total	0.00E+00	0.00E+00	0.00E+00	4.68E-06	4.68E-06	2.12695E-09	2.46175E-08
Ag^+	0.00E+00	0.00E+00	0.00E+00	6.93E-10	6.93E-10	3.14985E-13	3.64566E-12
Al^{+3}	0.00E+00	0.00E+00	0.00E+00	7.82E-09	7.82E-09	3.55287E-12	4.11211E-11
As^{+3}	0.00E+00	0.00E+00	0.00E+00	2.39E-06	2.39E-06	1.08441E-09	1.2551E-08
B^{+3}	0.00E+00	0.00E+00	0.00E+00	3.60E-08	3.60E-08	1.63421E-11	1.89145E-10
Ba^{+2}	0.00E+00	0.00E+00	0.00E+00	3.98E-12	3.98E-12	1.80811E-15	2.09272E-14
Bi^{+3}	0.00E+00	0.00E+00	0.00E+00	4.50E-10	4.50E-10	2.04664E-13	2.36879E-12
$C_2O_4^{-2}$	0.00E+00	0.00E+00	0.00E+00	0.00E+00	0.00E+00	0	0
Ca^{+2}	0.00E+00	0.00E+00	0.00E+00	2.86E-08	2.86E-08	1.30048E-11	1.50518E-10
Cd^{+2}	0.00E+00	0.00E+00	0.00E+00	8.74E-08	8.74E-08	3.97434E-11	4.59993E-10
Ce^{+3}	0.00E+00	0.00E+00	0.00E+00	3.74E-11	3.74E-11	1.70179E-14	1.96966E-13
Cl^-	0.00E+00	0.00E+00	0.00E+00	5.69E-07	5.69E-07	2.58619E-10	2.99327E-09
CO_3^{-2}	0.00E+00	0.00E+00	0.00E+00	1.28E-08	1.28E-08	5.79721E-12	6.70973E-11
Cr^{+3}	0.00E+00	0.00E+00	0.00E+00	8.05E-09	8.05E-09	3.65922E-12	4.23521E-11
Cu^{+2}	0.00E+00	0.00E+00	0.00E+00	6.67E-11	6.67E-11	3.0296E-14	3.50648E-13
F^-	0.00E+00	0.00E+00	0.00E+00	1.91E-07	1.91E-07	8.69096E-11	1.0059E-09
Fe^{+3}	0.00E+00	0.00E+00	0.00E+00	4.62E-09	4.62E-09	2.10165E-12	2.43247E-11
H^+	0.00E+00	0.00E+00	0.00E+00		0.00E+00	0	0
H_2O	0.00E+00	0.00E+00	0.00E+00		0.00E+00	0	0
Hg^{+2}	0.00E+00	0.00E+00	0.00E+00	0.00E+00	0.00E+00	0	0
K^+	0.00E+00	0.00E+00	0.00E+00	6.09E-07	6.09E-07	2.77031E-10	3.20637E-09
La^{+3}	0.00E+00	0.00E+00	0.00E+00	8.67E-12	8.67E-12	3.93983E-15	4.55998E-14
Li^+	0.00E+00	0.00E+00	0.00E+00	9.67E-08	9.67E-08	4.39731E-11	5.08948E-10
Mg^{+2}	0.00E+00	0.00E+00	0.00E+00	3.50E-09	3.50E-09	1.58921E-12	1.83936E-11
Mn^{+3}	0.00E+00	0.00E+00	0.00E+00	3.07E-10	3.07E-10	1.39651E-13	1.61633E-12
MnO_4^-	0.00E+00	0.00E+00	0.00E+00		0.00E+00	0	0
Na^+	0.00E+00	0.00E+00	0.00E+00	2.57E-07	2.57E-07	1.16642E-10	1.35003E-09
NH_4^+	0.00E+00	0.00E+00	0.00E+00	0.00E+00	0.00E+00	0	0
Ni^{+2}	0.00E+00	0.00E+00	0.00E+00	9.20E-10	9.20E-10	4.18061E-13	4.83867E-12
NO_2^-	0.00E+00	0.00E+00	0.00E+00	0.00E+00	0.00E+00	0	0
NO_3^-	0.00E+00	0.00E+00	0.00E+00	0.00E+00	0.00E+00	0	0
O^{-2}				1.03E-07	1.03E-07	4.68509E-11	5.42256E-10
OH^-	0.00E+00	0.00E+00	0.00E+00	3.62E-09	3.62E-09	1.64334E-12	1.90201E-11
$OH(b)^-$	0.00E+00	0.00E+00	0.00E+00		0.00E+00	0	0
P^{+0}				0.00E+00	0.00E+00	0	0
Pb^{+2}	0.00E+00	0.00E+00	0.00E+00	8.44E-10	8.44E-10	3.83631E-13	4.44017E-12
Pd^{+2}	0.00E+00	0.00E+00	0.00E+00	2.72E-13	2.72E-13	1.23828E-16	1.4332E-15
PO_4^{-3}	0.00E+00	0.00E+00	0.00E+00	0.00E+00	0.00E+00	0	0
S^{-4}				0.00E+00	0.00E+00	0	0
Si^{+4}				2.39E-08	2.39E-08	1.08759E-11	1.25878E-10
SiO_4^{-4}	0.00E+00	0.00E+00	0.00E+00		0.00E+00	0	0
SO_4^{-2}	0.00E+00	0.00E+00	0.00E+00	0.00E+00	0.00E+00	0	0
Sr^{+2}	0.00E+00	0.00E+00	0.00E+00	2.73E-12	2.73E-12	1.24043E-15	1.43568E-14
Ti^{+4}	0.00E+00	0.00E+00	0.00E+00	2.33E-07	2.33E-07	1.05996E-10	1.22681E-09
Zn^{+2}	0.00E+00	0.00E+00	0.00E+00	1.23E-08	1.23E-08	5.58122E-12	6.45975E-11
Zr^{+4}	0.00E+00	0.00E+00	0.00E+00	2.46E-09	2.46E-09	1.11942E-12	1.29562E-11

Rad. Component	Aqueous Rad. Components Ci/L	Ci/day	Lb/day	Solids Rad. Components (1) Ci/L	Ci/day	Lb/day	Total Rad. Components (1) Ci/L	Ci/day	Lb/day
Total	0.00E+00	0.00E+00	0.00E+00	5.03E-13	1.21E-08	2.79E-10	5.03E-13	1.21E-08	2.79E-10
^{241}Am	0	0.00E+00	0.00E+00	6.12E-17	1.47E-12	9.45E-16	6.12E-17	1.47E-12	9.45E-16
^{14}C	0.00E+00	0.00E+00	0.00E+00	0.00E+00	0.00E+00	0.00E+00	0.00E+00	0.00E+00	0.00E+00
^{60}Co	0.00E+00	0.00E+00	0.00E+00	8.05E-16	1.93E-11	3.76E-17	8.05E-16	1.93E-11	3.76E-17
^{243}Cm	0.00E+00	0.00E+00	0.00E+00	1.63E-19	3.91E-15	1.70E-19	1.63E-19	3.91E-15	1.70E-19
^{244}Cm	0.00E+00	0.00E+00	0.00E+00	1.75E-19	4.20E-15	1.14E-19	1.75E-19	4.20E-15	1.14E-19
^{137}Cs	0.00E+00	0.00E+00	0.00E+00	7.79E-14	1.87E-09	4.75E-14	7.79E-14	1.87E-09	4.75E-14
^{152}Eu	0.00E+00	0.00E+00	0.00E+00	2.13E-16	5.12E-12	6.49E-17	2.13E-16	5.12E-12	6.49E-17
^{154}Eu	0.00E+00	0.00E+00	0.00E+00	7.07E-16	1.70E-11	1.38E-16	7.07E-16	1.70E-11	1.38E-16
^{155}Eu	0.00E+00	0.00E+00	0.00E+00	1.22E-15	2.92E-11	1.33E-16	1.22E-15	2.92E-11	1.33E-16
^{3}H	0.00E+00	0.00E+00	0.00E+00	7.57E-16	1.82E-11	4.17E-18	7.57E-16	1.82E-11	4.17E-18
^{129}I	0.00E+00	0.00E+00	0.00E+00	0.00E+00	0.00E+00	0.00E+00	0.00E+00	0.00E+00	0.00E+00
^{63}Ni	0.00E+00	0.00E+00	0.00E+00	6.29E-15	1.51E-10	5.86E-15	6.29E-15	1.51E-10	5.86E-15
^{237}Np	0.00E+00	0.00E+00	0.00E+00	2.63E-19	6.32E-15	1.98E-14	2.63E-19	6.32E-15	1.98E-14
^{239}Pu	0.00E+00	0.00E+00	0.00E+00	3.55E-19	8.52E-15	1.10E-18	3.55E-19	8.52E-15	1.10E-18

^{239}Pu	0.00E+00	0.00E+00	0.00E+00	4.15E-18	9.96E-14	3.54E-15	4.15E-18	9.96E-14	3.54E-15
^{240}Pu	0.00E+00	0.00E+00	0.00E+00	7.15E-19	1.72E-14	1.67E-16	7.15E-19	1.72E-14	1.67E-16
^{241}Pu	0.00E+00	0.00E+00	0.00E+00	1.77E-17	4.25E-13	9.09E-18	1.77E-17	4.25E-13	9.09E-18
^{125}Sb	0.00E+00	0.00E+00	0.00E+00	7.15E-14	1.72E-09	3.65E-15	7.15E-14	1.72E-09	3.65E-15
^{151}Sm	0.00E+00	0.00E+00	0.00E+00	4.05E-14	9.71E-10	8.14E-14	4.05E-14	9.71E-10	8.14E-14
^{126}Sn	0.00E+00	0.00E+00	0.00E+00	2.45E-17	5.88E-13	1.14E-13	2.45E-17	5.88E-13	1.14E-13
^{90}Sr	0.00E+00	0.00E+00	0.00E+00	2.65E-13	6.35E-09	1.01E-13	2.65E-13	6.35E-09	1.01E-13
^{99}Tc	0.00E+00	0.00E+00	0.00E+00	3.81E-14	9.15E-10	1.19E-10	3.81E-14	9.15E-10	1.19E-10
^{232}Th	0.00E+00	0.00E+00	0.00E+00	9.06E-20	2.18E-15	4.36E-11	9.06E-20	2.18E-15	4.36E-11
^{233}U	0.00E+00	0.00E+00	0.00E+00	1.68E-18	4.04E-14	9.24E-15	1.68E-18	4.04E-14	9.24E-15
^{234}U	0.00E+00	0.00E+00	0.00E+00	9.79E-19	2.35E-14	8.34E-15	9.79E-19	2.35E-14	8.34E-15
^{235}U	0.00E+00	0.00E+00	0.00E+00	3.78E-20	9.07E-16	9.26E-13	3.78E-20	9.07E-16	9.26E-13
^{236}U	0.00E+00	0.00E+00	0.00E+00	1.13E-19	2.72E-15	9.27E-14	1.13E-19	2.72E-15	9.27E-14
^{238}U	0.00E+00	0.00E+00	0.00E+00	7.28E-19	1.75E-14	1.15E-10	7.28E-19	1.75E-14	1.15E-10

Component (CAS)	Organic Components mol/L	Lb/gal	Lb/day	Mt/day	g/sec
Total	7.03E-14	1.43E-13	1.52E-08	6.91106E-12	7.99891E-11
57-14-7	0.00E+00	0	0.00E+00	0	0
58-90-2	0.00E+00	0	0.00E+00	0	0
58-89-9	1.38E-18	3.35079E-18	2.12E-14	9.65655E-18	1.11766E-16
71-43-2	0.00E+00	0	0.00E+00	0	0
75-69-4	0.00E+00	0	0.00E+00	0	0
75-05-8	0.00E+00	0	0.00E+00	0	0
76-44-8	0.00E+00	0	0.00E+00	0	0
79-01-6	0.00E+00	0	0.00E+00	0	0
80-62-6	0.00E+00	0	0.00E+00	0	0
84-74-2	5.38E-15	1.25082E-14	7.93E-11	3.60471E-14	4.17212E-13
84-66-2	0.00E+00	0	0.00E+00	0	0
87-86-5	0.00E+00	0	0.00E+00	0	0
87-68-3	0.00E+00	0	0.00E+00	0	0
87-61-6	0.00E+00	0	0.00E+00	0	0
88-85-7	6.36E-14	1.27843E-13	8.11E-10	3.68429E-13	4.26422E-12
91-57-6	0.00E+00	0	0.00E+00	0	0
91-20-3	0.00E+00	0	0.00E+00	0	0
95-94-3	0.00E+00	0	0.00E+00	0	0
98-86-2	0.00E+00	0	0.00E+00	0	0
99-87-6	0.00E+00	0	0.00E+00	0	0
100-51-6	0.00E+00	0	0.00E+00	0	0
107-21-1	0.00E+00	0	0.00E+00	0	0
108-95-2	0.00E+00	0	0.00E+00	0	0
108-88-3	0.00E+00	0	0.00E+00	0	0
120-82-1	0.00E+00	0	0.00E+00	0	0
122-66-7	0.00E+00	0	0.00E+00	0	0
122-39-4	0.00E+00	0	0.00E+00	0	0
129-00-0	1.83E-16	3.08808E-16	1.96E-12	8.89948E-16	1.03003E-14
131-11-3	0.00E+00	0	0.00E+00	0	0
132-64-9	0.00E+00	0	0.00E+00	0	0
156-59-2	0.00E+00	0	0.00E+00	0	0
218-01-9	8.59E-16	1.63573E-15	1.04E-11	4.71398E-15	5.456E-14
309-00-2	2.63E-20	8.02269E-20	5.09E-16	2.31204E-19	2.67597E-18
319-85-7	8.73E-17	2.11779E-16	1.34E-12	6.10322E-16	7.06391E-15
534-52-1	0.00E+00	0	0.00E+00	0	0
603-34-9	0.00E+00	0	0.00E+00	0	0
4170-30-3	0.00E+00	0	0.00E+00	0	0
10061-01-5	0.00E+00	0	0.00E+00	0	0
23950-58-5	0.00E+00	0	0.00E+00	0	0
38380-08-4	1.06E-18	3.19558E-18	2.03E-14	9.20928E-18	1.06589E-16
100-21-0	0.00E+00	0	0.00E+00	0	0
106-93-4	0.00E+00	0	0.00E+00	0	0
106-97-8	0.00E+00	0	0.00E+00	0	0
106-99-0	0.00E+00	0	0.00E+00	0	0
108-87-2	0.00E+00	0	0.00E+00	0	0
110-54-3	0.00E+00	0	0.00E+00	0	0
110-82-7	0.00E+00	0	0.00E+00	0	0
111-84-2	0.00E+00	0	0.00E+00	0	0
118-74-1	0.00E+00	0	0.00E+00	0	0
120-12-7	0.00E+00	0	0.00E+00	0	0
127-18-4	0.00E+00	0	0.00E+00	0	0
1336-36-3	1.39E-22	3.72831E-22	2.36E-18	1.07445E-21	1.24358E-20
144-62-7	0.00E+00	0	0.00E+00	0	0
208-96-8	1.75E-54	2.22501E-54	1.41E-50	6.41219E-54	7.42152E-53
50-32-8	3.96E-16	8.33083E-16	5.28E-12	2.40084E-15	2.77875E-14
56-23-5	0.00E+00	0	0.00E+00	0	0
60-35-5	0.00E+00	0	0.00E+00	0	0
60-57-1	5.16E-19	1.64132E-18	1.04E-14	4.73009E-18	5.47465E-17
62-75-9	0.00E+00	0	0.00E+00	0	0
75-12-7	0.00E+00	0	0.00E+00	0	0
76-15-3	0.00E+00	0	0.00E+00	0	0
8001-35-2	1.67E-18	5.76471E-18	3.65E-14	1.66132E-17	1.92282E-16
88-89-1	1.18E-12	2.25475E-12	1.43E-08	6.49793E-12	7.52075E-11
126-73-8	0.00E+00	0	0.00E+00	0	0

Component	Aqueous Components mol/L	Lb/gal	Lb/day	Solid Components Lb/day	Total Component Lb/day	Mt/day	g/sec
$C_2O_4^{-2}$	0.00E+00	0.00E+00	0.00E+00	0.00E+00	0.00E+00	0	0
Formate	0.00E+00	0.00E+00	0.00E+00	0.00E+00	0.00E+00	0	0
Acetate	0.00E+00	0.00E+00	0.00E+00	0.00E+00	0.00E+00	0	0
Glycolate	0.00E+00	0.00E+00	0.00E+00	0.00E+00	0.00E+00	0	0
IDA	0.00E+00	0.00E+00	0.00E+00	0.00E+00	0.00E+00	0	0
Citrate	0.00E+00	0.00E+00	0.00E+00	0.00E+00	0.00E+00	0	0
HEDTA	0.00E+00	0.00E+00	0.00E+00	0.00E+00	0.00E+00	0	0
EDTA	0.00E+00	0.00E+00	0.00E+00	0.00E+00	0.00E+00	0	0

Table A-10 HMP06 Stream Report

River Protection Project - Waste Treatment Plant

Stream Number:	HMP06
Stream Name:	Melter offgas (primary)
Configuration:	0
	0
Run Data File:	H:\Working Folder 11 (Vishal)\Emissions_Case2_Run4_SubEm\MRQ_03_054_run1_Streams.csv
Run Date / Time:	4/15/2003 - 6:40:10 AM

Stream Properties Variable	Value	Units
Density	3.64E-04	g/cm³
Enthalpy	-1.69E+07	BTU/hr
Mass Flow	4.88E+03	Lb/hr
	1.17E+05	Lb/day
Volumetric Flow	2.48E+04	GPM
Molar Flow	2.18E+02	Lbmol/hr
Volumetric Flow	3.32E+03	ft³/min
Molecular Weight	2.07E+01	Lb/Lbmol
Pressure	9.83E+02	mbar
Temperature	4.00E+02	C
Viscosity	2.82E-02	cP
Na Molarity	0.00E+00	mol/L
pH	#NUM!	pH
Total TRU	4.80E-08	Ci/L
Total Activity	3.25E-05	Ci/L

Gaseous Components (1) Component	mol/L	Lb/day	Mt/day
CO	2.40E-06	2.00E+01	0.009107806
CO_2	2.40E-04	3.15E+03	1.431019457
H_2O	1.36E-02	7.33E+04	33.30428564
NO	9.21E-05	8.24E+02	0.374450438
NO_2	8.39E-06	1.15E+02	0.052310614
N_2	2.76E-03	2.30E+04	10.46927274
O_2	8.32E-04	7.94E+03	3.606827788
SO_2	1.68E-06	3.21E+01	0.014592218
NH_3	2.15E-06	1.09E+01	0.004971796
HNO_3	3.99E-48	7.49E-41	3.40366E-44
HCl	2.27E-06	2.47E+01	0.011207442
HF	2.45E-06	1.46E+01	0.006630528

(1) All radionuclides in gaseous streams are assumed to exist as solid particulate.

Component	Aqueous Components mol/L	Lb/gal	Lb/day	Solid Components Lb/day	Total Component Lb/day	mt/day	g/sec
Total	0.00E+00	0.00E+00	0.00E+00	8.63E+03	8.63E+03	3.923735222	45.41360211
Ag^+	0.00E+00	0.00E+00	0.00E+00	4.59E-01	4.59E-01	0.000208605	0.002414412
Al^{+3}	0.00E+00	0.00E+00	0.00E+00	5.27E+00	5.27E+00	0.002393896	0.02770713
As^{+3}	0.00E+00	0.00E+00	0.00E+00	6.25E+03	6.25E+03	2.841894403	32.89229634
B^{+3}	0.00E+00	0.00E+00	0.00E+00	1.23E+01	1.23E+01	0.005586492	0.064658468
Ba^{+2}	0.00E+00	0.00E+00	0.00E+00	1.07E+00	1.07E+00	0.000487878	0.005646738
Bi^{+3}	0.00E+00	0.00E+00	0.00E+00	6.78E-01	6.78E-01	0.000307999	0.003564798
$C_2O_4^{-2}$	0.00E+00	0.00E+00	0.00E+00	1.25E+02	1.25E+02	0.056801398	0.657423587
Ca^{+2}	0.00E+00	0.00E+00	0.00E+00	2.88E+00	2.88E+00	0.001307189	0.015129502
Cd^{+2}	0.00E+00	0.00E+00	0.00E+00	1.32E+01	1.32E+01	0.00599277	0.069360762
Ce^{+3}	0.00E+00	0.00E+00	0.00E+00	1.13E-01	1.13E-01	5.11596E-05	0.000592125
Cl^-	0.00E+00	0.00E+00	0.00E+00	8.03E+00	8.03E+00	0.00365186	0.042266896
CO_3^{-2}	0.00E+00	0.00E+00	0.00E+00	0.00E+00	0.00E+00	0	0
Cr^{+3}	0.00E+00	0.00E+00	0.00E+00	4.60E-01	4.60E-01	0.000209036	0.0024194
Cu^{+2}	0.00E+00	0.00E+00	0.00E+00	5.88E-02	5.88E-02	2.67249E-05	0.000309316
F^-	0.00E+00	0.00E+00	0.00E+00	2.60E+01	2.60E+01	0.0118039	0.136619209
Fe^{+3}	0.00E+00	0.00E+00	0.00E+00	3.51E+00	3.51E+00	0.001596332	0.018476068
H^-	0.00E+00	0.00E+00	0.00E+00		0.00E+00	0	0
H_2O	0.00E+00	0.00E+00	0.00E+00		0.00E+00	0	0
Hg^{+2}	0.00E+00	0.00E+00	0.00E+00	5.04E+01	5.04E+01	0.022886777	0.264893257
K^+	0.00E+00	0.00E+00	0.00E+00	1.18E+01	1.18E+01	0.005344524	0.061857917
La^{+3}	0.00E+00	0.00E+00	0.00E+00	1.25E+00	1.25E+00	0.000570383	0.006601652
Li^+	0.00E+00	0.00E+00	0.00E+00	1.06E+00	1.06E+00	0.000482155	0.005580497
Mg^{+2}	0.00E+00	0.00E+00	0.00E+00	2.55E-01	2.55E-01	0.000115688	0.001338986
Mn^{+2}	0.00E+00	0.00E+00	0.00E+00	2.17E+00	2.17E+00	0.000986765	0.011420888
MnO_4^-	0.00E+00	0.00E+00	0.00E+00		0.00E+00	0	0
Na^+	0.00E+00	0.00E+00	0.00E+00	1.21E+01	1.21E+01	0.005520495	0.063894623
NH_4^+	0.00E+00	0.00E+00	0.00E+00	0.00E+00	0.00E+00	0	0
Ni^{+2}	0.00E+00	0.00E+00	0.00E+00	6.99E-01	6.99E-01	0.000317647	0.003676464
NO_2^-	0.00E+00	0.00E+00	0.00E+00	0.00E+00	0.00E+00	0	0
NO_3^-	0.00E+00	0.00E+00	0.00E+00	0.00E+00	0.00E+00	0	0
O^{-2}				2.08E+03	2.08E+03	0.944142602	10.92757641
OH^-	0.00E+00	0.00E+00	0.00E+00	0.00E+00	0.00E+00	0	0
$OH(b)^-$	0.00E+00	0.00E+00	0.00E+00		0.00E+00	0	0
P^{-3}				3.26E+00	3.26E+00	0.001479944	0.017128987
Pb^{+2}	0.00E+00	0.00E+00	0.00E+00	1.50E-01	1.50E-01	6.826E-05	0.000790046
Pd^{+2}	0.00E+00	0.00E+00	0.00E+00	1.55E-02	1.55E-02	7.04456E-06	8.15343E-05
PO_4^{-3}	0.00E+00	0.00E+00	0.00E+00	0.00E+00	0.00E+00	0	0
S^{-2}				0.00E+00	0.00E+00	0	0
Si^{+4}				8.12E+00	8.12E+00	0.00369192	0.042730556
SiO_4^{-4}	0.00E+00	0.00E+00	0.00E+00		0.00E+00	0	0
SO_4^{-2}	0.00E+00	0.00E+00	0.00E+00	0.00E+00	0.00E+00	0	0
Sr^{+2}	0.00E+00	0.00E+00	0.00E+00	1.25E-01	1.25E-01	5.67528E-05	0.000656861
Ti^{+4}	0.00E+00	0.00E+00	0.00E+00	9.60E+00	9.60E+00	0.004363962	0.050508824
Zn^{+2}	0.00E+00	0.00E+00	0.00E+00	1.85E+00	1.85E+00	0.000842722	0.009753727
Zr^{+4}	0.00E+00	0.00E+00	0.00E+00	1.18E+00	1.18E+00	0.000537938	0.006226134

Rad. Component	Aqueous Rad. Components Ci/L	Ci/day	Lb/day	Solids Rad. Components (1) Ci/L	Ci/day	Lb/day	Total Rad. Components (1) Ci/L	Ci/day	Lb/day
Total	0.00E+00	0.00E+00	0.00E+00	3.25E-05	4.40E+03	1.39E+01	3.25E-05	4.40E+03	1.39E+01
^{241}Am	0	0.00E+00	0.00E+00	3.57E-08	4.83E+00	3.11E-03	3.57E-08	4.83E+00	3.11E-03
^{14}C	0.00E+00	0.00E+00	0.00E+00	1.20E-09	1.62E-01	7.99E-05	1.20E-09	1.62E-01	7.99E-05
^{60}Co	0.00E+00	0.00E+00	0.00E+00	3.97E-09	5.37E-01	1.05E-06	3.97E-09	5.37E-01	1.05E-06
^{243}Cm	0.00E+00	0.00E+00	0.00E+00	1.19E-09	1.61E-01	7.02E-06	1.19E-09	1.61E-01	7.02E-06
^{244}Cm	0.00E+00	0.00E+00	0.00E+00	8.91E-10	1.21E-01	3.28E-06	8.91E-10	1.21E-01	3.28E-06
^{137}Cs	0.00E+00	0.00E+00	0.00E+00	2.36E-05	3.20E+03	8.12E-02	2.36E-05	3.20E+03	8.12E-02
^{152}Eu	0.00E+00	0.00E+00	0.00E+00	2.07E-10	2.80E-02	3.55E-07	2.07E-10	2.80E-02	3.55E-07
^{154}Eu	0.00E+00	0.00E+00	0.00E+00	2.07E-08	2.80E+00	2.28E-05	2.07E-08	2.80E+00	2.28E-05
^{155}Eu	0.00E+00	0.00E+00	0.00E+00	1.16E-08	1.57E+00	7.12E-06	1.16E-08	1.57E+00	7.12E-06
^{3}H	0.00E+00	0.00E+00	0.00E+00	3.72E-08	5.03E+00	1.15E-06	3.72E-08	5.03E+00	1.15E-06
^{129}I	0.00E+00	0.00E+00	0.00E+00	3.26E-11	4.41E-03	5.50E-02	3.26E-11	4.41E-03	5.50E-02
^{63}Ni	0.00E+00	0.00E+00	0.00E+00	4.32E-09	5.84E-01	2.27E-05	4.32E-09	5.84E-01	2.27E-05
^{237}Np	0.00E+00	0.00E+00	0.00E+00	2.93E-11	3.97E-03	1.24E-02	2.93E-11	3.97E-03	1.24E-02
^{238}Pu	0.00E+00	0.00E+00	0.00E+00	1.39E-10	1.88E-02	2.42E-06	1.39E-10	1.88E-02	2.42E-06

^{239}Pu	0.00E+00	0.00E+00	0.00E-00	1.23E-09	1.66E-01	5.91E-03	1.23E-09	1.66E-01	5.91E-03
^{240}Pu	0.00E+00	0.00E+00	0.00E+00	6.74E-11	9.12E-03	8.86E-05	6.74E-11	9.12E-03	8.86E-05
^{241}Pu	0.00E+00	0.00E+00	0.00E+00	8.73E-09	1.18E+00	2.53E-05	8.73E-09	1.18E+00	2.53E-05
^{125}Sb	0.00E+00	0.00E+00	0.00E+00	2.60E-08	3.52E+00	7.48E-06	2.60E-08	3.52E+00	7.48E-06
^{151}Sm	0.00E+00	0.00E+00	0.00E+00	4.29E-08	5.80E+00	4.86E-04	4.29E-08	5.80E+00	4.86E-04
^{126}Sn	0.00E+00	0.00E+00	0.00E+00	6.14E-11	8.31E-03	1.61E-03	6.14E-11	8.31E-03	1.61E-03
^{90}Sr	0.00E+00	0.00E-00	0.00E+00	7.99E-06	1.08E+03	1.73E-02	7.99E-06	1.08E+03	1.73E-02
^{99}Tc	0.00E+00	0.00E+00	0.00E+00	6.89E-07	9.32E+01	1.21E+01	6.89E-07	9.32E+01	1.21E+01
^{232}Th	0.00E+00	0.00E+00	0.00E+00	3.18E-13	4.31E-05	8.63E-01	3.18E-13	4.31E-05	8.63E-01
^{233}U	0.00E+00	0.00E+00	0.00E+00	4.91E-13	6.64E-05	1.52E-05	4.91E-13	6.64E-05	1.52E-05
^{234}U	0.00E+00	0.00E+00	0.00E+00	1.37E-12	1.86E-04	6.60E-05	1.37E-12	1.86E-04	6.60E-05
^{235}U	0.00E+00	0.00E+00	0.00E+00	1.02E-13	1.38E-05	1.41E-02	1.02E-13	1.38E-05	1.41E-02
^{236}U	0.00E+00	0.00E+00	0.00E+00	4.94E-14	6.68E-06	2.28E-04	4.94E-14	6.68E-06	2.28E-04
^{238}U	0.00E+00	0.00E+00	0.00E+00	7.87E-13	1.07E-04	6.99E-01	7.87E-13	1.07E-04	6.99E-01

Component	Organic Components				
(CAS)	mol/L	Lb/gal	Lb/day	Mt/day	g/sec
Total	2.45E-07	3.36E-07	1.88E+01	0.008560596	0.099060976
57-14-7	3.51E-08	1.75921E-08	6.29E-01	0.000285725	0.003307003
58-90-2	1.02E-08	1.97425E-08	7.05E-01	0.000320652	0.003711244
58-89-9	3.96E-11	9.6157E-11	3.44E-03	1.56175E-06	1.80758E-05
71-43-2	2.23E-16	1.45306E-16	5.19E-09	2.36002E-12	2.73151E-11
75-69-4	0.00E+00	0	0.00E+00	0	0
75-05-8	8.91E-09	3.05131E-09	1.09E-01	4.95585E-05	0.000573594
76-44-8	1.13E-12	3.52338E-12	1.26E-04	5.72256E-08	6.62333E-07
79-01-6	6.45E-18	7.07778E-18	2.53E-10	1.14955E-13	1.3305E-12
80-62-6	0.00E+00	0	0.00E+00	0	0
84-74-2	1.53E-08	3.54439E-08	1.27E-00	0.000575668	0.006662825
84-66-2	1.82E-08	3.36887E-08	1.20E+00	0.000547161	0.006332886
87-86-5	1.64E-08	3.64705E-08	1.30E+00	0.000592342	0.00685581
87-68-3	2.49E-18	5.41447E-18	1.93E-10	8.79402E-14	1.01783E-12
87-61-6	0.00E+00	0	0.00E+00	0	0
88-85-7	2.57E-08	5.157E-08	1.84E+00	0.000837583	0.009694247
91-57-6	0.00E+00	0	0.00E+00	0	0
91-20-3	1.38E-12	1.47578E-12	5.27E-05	2.39691E-08	2.7742E-07
95-94-3	0.00E+00	0	0.00E+00	0	0
98-86-2	1.87E-08	1.87691E-08	6.71E-01	0.000304641	0.003528253
99-87-6	0.00E+00	0	0.00E+00	0	0
100-51-6	0.00E+00	0	0.00E+00	0	0
107-21-1	0.00E+00	0	0.00E+00	0	0
108-95-2	4.55E-08	3.57127E-08	1.28E+00	0.000580034	0.006713359
108-88-3	7.36E-17	5.65512E-17	2.02E-09	9.18487E-13	1.06306E-11
120-82-1	6.61E-14	1.00086E-13	3.58E-06	1.62557E-09	1.88145E-08
122-66-7	0.00E+00	0	0.00E+00	0	0
122-39-4	3.89E-09	5.4963E-09	1.96E-01	8.92691E-05	0.001033208
129-00-0	1.38E-08	2.32598E-08	8.31E-01	0.000377779	0.004372441
131-11-3	0.00E+00	0	0.00E+00	0	0
132-64-9	2.99E-10	4.20174E-10	1.50E-02	6.82433E-06	7.89853E-05
156-59-2	0.00E+00	0	0.00E+00	0	0
218-01-9	1.47E-08	2.79726E-08	1.00E+00	0.000454322	0.005258352
309-00-2	5.27E-11	1.60519E-10	5.74E-03	2.6071E-06	3.01748E-05
319-85-7	6.27E-11	1.52226E-10	5.44E-03	2.4724E-06	2.86158E-05
534-52-1	0.00E+00	0	0.00E+00	0	0
603-34-9	1.10E-08	2.24396E-08	8.02E-01	0.000364456	0.004218246
4170-30-3	7.24E-09	4.23475E-09	1.51E-01	6.87795E-05	0.000796059
10061-01-5	5.62E-15	5.20224E-15	1.86E-07	8.44931E-11	9.77929E-10
23950-58-5	0.00E+00	0	0.00E+00	0	0
38380-08-4	3.76E-11	1.13335E-10	4.05E-03	1.84075E-06	2.13049E-05
100-21-0	2.61E-08	3.62323E-08	1.29E+00	0.000588473	0.006811036
106-93-4	6.34E-12	9.9375E-12	3.55E-04	1.61402E-07	1.86807E-06
106-97-8	0.00E+00	0	0.00E+00	0	0
106-99-0	0.00E+00	0	0.00E+00	0	0
108-87-2	0.00E+00	0	0.00E+00	0	0
110-54-3	0.00E+00	0	0.00E+00	0	0
110-82-7	0.00E+00	0	0.00E+00	0	0
111-84-2	0.00E+00	0	0.00E+00	0	0
118-74-1	1.85E-15	4.3928E-15	1.57E-07	7.13464E-11	8.25769E-10
120-12-7	3.97E-09	5.90628E-09	2.11E-01	9.5928E-05	0.001110277
127-18-4	1.85E-19	2.5602E-19	9.15E-12	4.15819E-15	4.81272E-14
1336-36-3	1.32E-10	3.55983E-10	1.27E-02	5.78177E-06	6.69186E-05
144-62-7	4.83E-09	3.63098E-09	1.30E-01	5.89732E-05	0.00068256
208-96-8	1.47E-09	1.86309E-09	6.66E-02	3.02597E-05	0.000350228
50-32-8	2.69E-10	5.66764E-10	2.03E-02	9.2052E-06	0.000106542
56-23-5	7.59E-26	9.74232E-26	3.48E-18	1.58232E-21	1.83139E-20
60-35-5	1.63E-08	8.03133E-09	2.87E-01	0.000130442	0.00150975
60-57-1	5.33E-11	1.69538E-10	6.06E-03	2.75359E-06	3.18703E-05
62-75-9	8.49E-08	5.25122E-08	1.88E+00	0.000852886	0.00987137
75-12-7	9.63E-06	3.61921E-08	1.29E+00	0.00058782	0.006803477
76-15-3	0.00E+00	0	0.00E+00	0	0
8001-35-2	6.32E-11	2.18442E-10	7.81E-03	3.54786E-06	4.10632E-05
88-89-1	2.35E-08	4.49955E-08	1.61E+00	0.000730803	0.008458373
126-73-8	1.65E-08	3.67265E-08	1.31E+00	0.0005965	0.006903933

	Aqueous Components			Solid Components	Total Component		
Component	mol/L	Lb/gal	Lb/day	Lb/day	Lb/day	Mt/day	g/sec
$C_2O_4^{-2}$	0.00E+00	0.00E+00	0.00E+00	1.25E+02	1.25E+02	0.056801398	0.657423587
Formate	0.00E+00	0.00E+00	0.00E+00	2.32E+00	2.32E+00	0.001052657	0.012183536
Acetate	0.00E+00	0.00E+00	0.00E+00	1.53E-05	1.53E-05	6.97417E-09	8.07195E-08
Glycolate	0.00E+00	0.00E+00	0.00E+00	1.25E+00	1.25E+00	0.000569454	0.006590909
IDA	0.00E+00	0.00E+00	0.00E+00	5.66E-02	5.66E-02	2.5749E-05	0.000298021
Citrate	0.00E+00	0.00E+00	0.00E+00	2.25E+00	2.25E+00	0.001024043	0.011852345
HEDTA	0.00E+00	0.00E+00	0.00E+00	1.59E+00	1.59E+00	0.00072246	0.008361803
EDTA	0.00E+00	0.00E+00	0.00E+00	2.87E-02	2.87E-02	1.30287E-05	0.000150796

Table A-11 HOP10 Stream Report

River Protection Project - Waste Treatment Plant

Stream Number: HOP10
Stream Name: MLW vessel ventilation header offgas
Configuration: 0
0
Run Data File: H:\Working Folder 11 (Vishal)\Emissions_Case2_Run4_SubEm\MAQ_03_054_run1_Streams.csv
Run Date / Time: 4/13/2003 - 6:40:10 AM

Stream Properties Variable	Value	Units
Density	1.14E-03	g/cm³
Enthalpy	-2.56E-04	BTU/hr
Mass Flow	1.88E-02	Lb/hr
	4.51E-03	Lb/day
Volumetric Flow	3.30E-02	GPM
Molar Flow	6.60E-00	Lbmol/hr
Volumetric Flow	4.41E-01	ft³/min
Molecular Weight	2.84E-01	Lb/Lbmol
Pressure	1.00E-03	mbar
Temperature	2.76E+01	C
Viscosity	1.83E-02	cP
Na Molarity	0.00E+00	mol/L
pH	#NUM!	pH
Total TRU	4.48E-11	Ci/L
Total Activity	2.59E-08	Ci/L

Gaseous Components (1) Component	mol/L	Lb/day	Mt/day
CO	2.23E-26	2.47E-21	1.12421E-24
CO_2	6.75E-11	1.18E-05	5.35125E-09
H_2O	1.50E-03	1.07E-02	0.0487878914
NO	2.82E-33	3.36E-28	1.52634E-31
NO_2	3.37E-33	6.14E-26	2.79091E-31
N_2	3.04E-02	3.36E-03	1.534617849
O_2	8.09E-03	1.03E-03	0.465971203
SO_2	7.51E-34	1.91E-28	6.66034E-32
NH_3	1.25E-09	8.47E-05	3.84781E-08
HNO_3	1.77E-11	4.43E-06	2.01159E-09
HCl	0.00E+00	0.00E+00	0
HF	5.29E-29	4.19E-24	1.90421E-27

(1) All radionuclides in gaseous streams are assumed to exist as solid particulate.

Component	Aqueous Components mol/L	Lb/gal	Lb/day	Solid Components Lb/day	Total Component Lb/day	mt/day	g/sec
Total	0.00E+00	0.00E+00	0.00E+00	8.54E-02	8.54E-02	3.88326E-05	0.000449451
Ag^+	0.00E+00	0.00E+00	0.00E+00	4.75E-06	4.75E-06	2.16094E-09	2.50109E-08
Al^{+3}	0.00E+00	0.00E+00	0.00E+00	5.90E-05	5.90E-05	2.68112E-08	3.10315E-07
As^{+3}	0.00E+00	0.00E+00	0.00E+00	6.26E-02	6.26E-02	2.84504E-05	0.000329287
B^{+3}	0.00E+00	0.00E+00	0.00E+00	1.24E-04	1.24E-04	5.64027E-08	6.52809E-07
Ba^{+2}	0.00E+00	0.00E+00	0.00E+00	1.20E-05	1.20E-05	5.46423E-09	6.32435E-08
Bi^{+3}	0.00E+00	0.00E+00	0.00E+00	7.59E-06	7.59E-06	3.44922E-09	3.99216E-08
$C_2O_4^{-2}$	0.00E+00	0.00E+00	0.00E+00	1.50E-05	1.50E-05	6.81617E-09	7.88908E-08
Ca^{+2}	0.00E+00	0.00E+00	0.00E+00	3.13E-05	3.13E-05	1.42478E-08	1.64905E-07
Cd^{+2}	0.00E+00	0.00E+00	0.00E+00	1.33E-04	1.33E-04	6.06432E-08	7.01889E-07
Ce^{+3}	0.00E+00	0.00E+00	0.00E+00	1.63E-06	1.63E-06	7.40674E-10	8.57262E-09
Cl^-	0.00E+00	0.00E+00	0.00E+00	1.36E-04	1.36E-04	6.19979E-08	7.17569E-07
CO_3^{-2}	0.00E+00	0.00E+00	0.00E+00	1.25E-05	1.25E-05	5.6924E-09	6.58843E-08
Cr^{+3}	0.00E+00	0.00E+00	0.00E+00	5.16E-06	5.16E-06	2.34344E-09	2.71232E-08
Cu^{+2}	0.00E+00	0.00E+00	0.00E+00	7.29E-07	7.29E-07	3.31361E-10	3.8352E-09
F^-	0.00E+00	0.00E+00	0.00E+00	3.83E-04	3.83E-04	1.73999E-07	2.01388E-06
Fe^{+3}	0.00E+00	0.00E+00	0.00E+00	4.36E-05	4.36E-05	1.98047E-08	2.29221E-07
H^+	0.00E+00	0.00E+00	0.00E+00		0.00E+00	0	0
H_2O	0.00E+00	0.00E+00	0.00E+00		0.00E+00	0	0
Hg^{+2}	0.00E+00	0.00E+00	0.00E+00	4.80E-04	4.80E-04	2.18246E-07	2.52599E-06
K^+	0.00E+00	0.00E+00	0.00E+00	1.20E-04	1.20E-04	5.47232E-08	6.33371E-07
La^{+3}	0.00E+00	0.00E+00	0.00E+00	1.33E-05	1.33E-05	6.04603E-09	6.99772E-08
Li^+	0.00E+00	0.00E+00	0.00E+00	1.09E-05	1.09E-05	4.94088E-09	5.71861E-08
Mg^{+2}	0.00E+00	0.00E+00	0.00E+00	3.16E-06	3.16E-06	1.43449E-09	1.66028E-08
Mn^{+2}	0.00E+00	0.00E+00	0.00E+00	2.37E-05	2.37E-05	1.07355E-08	1.24485E-07
MnO_4^-	0.00E+00	0.00E+00	0.00E+00		0.00E+00	0	0
Na^+	0.00E+00	0.00E+00	0.00E+00	1.36E-04	1.36E-04	6.18195E-08	7.15504E-07
NH_4^+	0.00E+00	0.00E+00	0.00E+00	0.00E+00	0.00E+00	0	0
Ni^{+2}	0.00E+00	0.00E+00	0.00E+00	7.74E-06	7.74E-06	3.51693E-09	4.07052E-08
NO_2^-	0.00E+00	0.00E+00	0.00E+00	4.70E-06	4.70E-06	2.13614E-09	2.47239E-08
NO_3^-	0.00E+00	0.00E+00	0.00E+00	3.28E-05	3.28E-05	1.48937E-08	1.72381E-07
O^{-2}				2.08E-02	2.08E-02	9.43882E-06	0.000109246
OH	0.00E+00	0.00E+00	0.00E+00	4.06E-05	4.06E-05	1.84646E-08	2.13711E-07
OH(b)	0.00E+00	0.00E+00	0.00E+00		0.00E+00	0	0
P^{+5}				2.41E-13	2.41E-13	1.09331E-16	1.2654E-15
Pb^{+2}	0.00E+00	0.00E+00	0.00E+00	1.86E-06	1.86E-06	8.46333E-10	9.79553E-09
Pd^{+2}	0.00E+00	0.00E+00	0.00E+00	1.92E-07	1.92E-07	8.73515E-11	1.01101E-09
PO_4^{-3}	0.00E+00	0.00E+00	0.00E+00	4.79E-06	4.79E-06	2.17816E-09	2.52102E-08
S^{+6}				3.28E-13	3.28E-13	1.49011E-16	1.72467E-15
Si^{+4}				9.07E-05	9.07E-05	4.12195E-08	4.77078E-07
SiO_4^{-4}	0.00E+00	0.00E+00	0.00E+00		0.00E+00	0	0
SO_4^{-2}	0.00E+00	0.00E+00	0.00E+00	1.56E-06	1.56E-06	7.0894E-10	8.20532E-09
Sr^{+2}	0.00E+00	0.00E+00	0.00E+00	1.40E-06	1.40E-06	6.35622E-10	7.35673E-09
Ti^{+4}	0.00E+00	0.00E+00	0.00E+00	9.65E-05	9.65E-05	4.38515E-08	5.07541E-07
Zn^{+2}	0.00E+00	0.00E+00	0.00E+00	1.90E-05	1.90E-05	8.65222E-09	1.00141E-07
Zr^{+4}	0.00E+00	0.00E+00	0.00E+00	1.61E-05	1.61E-05	7.31583E-09	8.4674E-08

Rad. Component	Aqueous Rad. Components Ci/L	Ci/day	Lb/day	Solids Rad. Components (1) Ci/L	Ci/day	Lb/day	Total Rad. Components (1) Ci/L	Ci/day	Lb/day
Total	0.00E+00	0.00E+00	0.00E+00	2.59E-08	4.65E-02	1.43E-04	2.59E-08	4.65E-02	1.43E-04
^{241}Am	0	0.00E+00	0.00E+00	3.33E-11	5.99E-05	3.85E-08	3.33E-11	5.99E-05	3.85E-08
^{14}C	0.00E+00	0.00E+00	0.00E+00	1.08E-15	1.94E-09	9.59E-13	1.08E-15	1.94E-09	9.59E-13
^{60}Co	0.00E+00	0.00E+00	0.00E+00	3.70E-12	6.66E-06	1.30E-11	3.70E-12	6.66E-06	1.30E-11
^{243}Cm	0.00E+00	0.00E+00	0.00E+00	1.11E-12	1.99E-06	8.70E-11	1.11E-12	1.99E-06	8.70E-11
^{244}Cm	0.00E+00	0.00E+00	0.00E+00	8.32E-13	1.50E-06	4.07E-11	8.32E-13	1.50E-06	4.07E-11
^{137}Cs	0.00E+00	0.00E+00	0.00E+00	1.84E-08	3.31E-02	8.41E-07	1.84E-08	3.31E-02	8.41E-07
^{152}Eu	0.00E+00	0.00E+00	0.00E+00	1.93E-13	3.47E-07	4.41E-12	1.93E-13	3.47E-07	4.41E-12
^{154}Eu	0.00E+00	0.00E+00	0.00E+00	1.93E-11	3.47E-05	2.83E-10	1.93E-11	3.47E-05	2.83E-10
^{155}Eu	0.00E+00	0.00E+00	0.00E+00	1.08E-11	1.95E-05	8.83E-11	1.08E-11	1.95E-05	8.83E-11
^{3}H	0.00E+00	0.00E+00	0.00E+00	2.53E-11	4.54E-05	1.04E-11	2.53E-11	4.54E-05	1.04E-11
^{129}I	0.00E+00	0.00E+00	0.00E+00	4.12E-15	7.40E-09	9.24E-08	4.12E-15	7.40E-09	9.24E-08
^{93}Nb	0.00E+00	0.00E+00	0.00E+00	3.59E-12	6.46E-06	2.51E-10	3.59E-12	6.46E-06	2.51E-10
^{237}Np	0.00E+00	0.00E+00	0.00E+00	2.74E-14	4.92E-08	1.54E-07	2.74E-14	4.92E-08	1.54E-07
^{238}Pu	0.00E+00	0.00E+00	0.00E+00	1.30E-13	2.33E-07	3.00E-11	1.30E-13	2.33E-07	3.00E-11

^{238}Pu	0.00E+00	0.00E+00	0.00E+00	1.15E-12	2.06E-06	7.33E-08	1.15E-12	2.06E-06	7.33E-08
^{239}Pu	0.00E+00	0.00E+00	0.00E+00	6.29E-14	1.13E-07	1.10E-09	6.29E-14	1.13E-07	1.10E-09
^{240}Pu	0.00E+00	0.00E+00	0.00E+00	8.14E-12	1.46E-05	3.13E-10	8.14E-12	1.46E-05	3.13E-10
^{124}Sb	0.00E+00	0.00E+00	0.00E+00	2.19E-11	3.94E-05	8.37E-11	2.19E-11	3.94E-05	8.37E-11
^{125}Sb	0.00E+00	0.00E+00	0.00E+00	4.00E-11	7.19E-05	6.02E-09	4.00E-11	7.19E-05	6.02E-09
^{126}Sn	0.00E+00	0.00E+00	0.00E+00	5.72E-14	1.03E-07	2.00E-08	5.72E-14	1.03E-07	2.00E-08
^{90}Sr	0.00E+00	0.00E+00	0.00E+00	6.74E-09	1.21E-02	1.93E-07	6.74E-09	1.21E-02	1.93E-07
^{99}Tc	0.00E+00	0.00E+00	0.00E+00	5.21E-10	9.35E-04	1.22E-04	5.21E-10	9.35E-04	1.22E-04
^{230}Th	0.00E+00	0.00E+00	0.00E+00	2.97E-16	5.34E-10	1.07E-05	2.97E-16	5.34E-10	1.07E-05
^{232}U	0.00E+00	0.00E+00	0.00E+00	4.58E-16	8.23E-10	1.88E-10	4.58E-16	8.23E-10	1.88E-10
^{233}U	0.00E+00	0.00E+00	0.00E+00	1.28E-15	2.31E-09	8.19E-10	1.28E-15	2.31E-09	8.19E-10
^{234}U	0.00E+00	0.00E+00	0.00E+00	9.53E-17	1.71E-10	1.75E-07	9.53E-17	1.71E-10	1.75E-07
^{235}U	0.00E+00	0.00E+00	0.00E+00	4.61E-17	8.29E-11	2.83E-09	4.61E-17	8.29E-11	2.83E-09
^{238}U	0.00E+00	0.00E+00	0.00E+00	7.35E-16	1.32E-09	8.67E-06	7.35E-16	1.32E-09	8.67E-06

Component (CAS)	Organic Components mol/L	Lb/gal	Lb/day	Mt/day	g/sec
Total	1.52E-08	4.27E-08	7.91E-02	1.374035E-05	0.000153244
57-14-7	7.27E-09	3.44688E-08	1.73E-03	7.869068E-07	9.107735E-06
58-90-2	1.50E-09	2.90709E-09	5.38E-03	6.272BE-07	7.260195E-06
58-89-9	1.02E-11	2.475E-11	1.17E-05	5.340465E-09	6.181095E-08
71-43-2	2.06E-14	1.343552E-14	6.38E-09	2.899065E-12	3.355395E-11
75-69-4	0.00E+00	0	0.00E+00	0	0
75-05-8	2.11E-09	1.75204E-09	8.32E-04	3.786495E-07	4.375537E-06
76-44-8	3.54E-12	1.72746E-11	8.20E-08	3.727445E-09	4.31417E-08
79-01-6	1.05E-13	1.1533E-13	5.47E-10	2.488654E-11	2.880268E-12
80-62-6	0.00E+00	0	0.00E+00	0	0
84-74-2	1.38E-09	3.20229E-09	1.52E-03	6.911095E-07	7.998945E-06
84-66-2	1.85E-10	3.47541E-10	1.65E-04	7.391251E-08	8.554615E-07
87-86-5	6.70E-12	1.48868E-11	7.07E-06	3.212772E-09	3.717835E-08
87-68-3	4.26E-16	9.26676E-16	4.40E-10	1.999354E-13	2.314296E-12
87-61-6	0.00E+00	0	0.00E+00	0	0
88-85-7	5.87E-10	1.17627E-09	5.58E-04	2.538127E-07	2.937645E-06
91-57-6	0.00E+00	0	0.00E+00	0	0
91-20-3	1.01E-11	1.0829E-11	5.14E-06	2.336635E-09	2.704445E-08
95-94-3	0.00E+00	0	0.00E+00	0	0
98-86-2	3.22E-09	3.24239E-09	1.54E-03	6.996295E-07	8.097365E-06
99-87-6	0.00E+00	0	0.00E+00	0	0
100-51-6	0.00E+00	0	0.00E+00	0	0
107-71-1	0.00E+00	0	0.00E+00	0	0
108-95-2	2.52E-10	1.98015E-10	9.40E-05	4.272695E-08	4.943241E-07
108-88-3	6.14E-15	6.26197E-15	2.97E-09	1.351185E-12	1.563187E-11
120-83-5	1.57E-12	2.37121E-12	1.13E-06	5.11655E-10	5.921685E-09
122-66-7	0.00E+00	0	0.00E+00	0	0
122-39-4	2.20E-10	3.10169E-10	1.47E-04	6.69277E-08	7.746185E-07
129-00-0	8.75E-09	1.39178E-08	6.61E-03	3.003172E-06	3.475845E-05
131-11-3	0.00E+00	0	0.00E+00	0	0
132-64-9	1.06E-09	1.493195E-09	7.09E-04	3.221955E-07	3.729115E-06
136-59-2	0.00E+00	0	0.00E+00	0	0
218-01-9	2.84E-09	7.32438E-09	3.48E-03	1.580435E-06	1.829175E-05
309-00-2	1.17E-10	3.55647E-10	1.69E-04	7.674015E-08	8.885965E-07
319-85-7	1.38E-12	3.35191E-12	1.59E-06	7.232615E-10	8.371055E-09
534-52-1	0.00E+00	0	0.00E+00	0	0
603-34-9	9.88E-10	2.02315E-09	9.60E-04	4.365485E-07	5.052635E-06
4170-30-3	1.17E-09	6.83467E-10	3.24E-04	1.474BE-07	1.706945E-06
10061-01-5	2.54E-13	2.35372E-13	1.12E-07	5.07877E-11	5.878215E-10
23950-58-5	0.00E+00	0	0.00E+00	0	0
38380-08-4	1.09E-11	3.27578E-11	1.56E-05	7.068355E-09	8.180965E-08
100-21-0	4.50E-15	6.23427E-15	2.96E-09	1.343195E-12	1.556945E-11
106-93-4	7.06E-11	1.10524E-10	5.25E-05	2.384845E-08	2.760235E-07
106-97-8	0.00E+00	0	0.00E+00	0	0
106-99-0	0.00E+00	0	0.00E+00	0	0
108-87-2	0.00E+00	0	0.00E+00	0	0
110-54-3	0.00E+00	0	0.00E+00	0	0
110-82-7	0.00E+00	0	0.00E+00	0	0
111-84-2	0.00E+00	0	0.00E+00	0	0
118-74-1	5.23E-14	1.24309E-13	5.90E-08	2.682295E-11	3.104515E-10
120-12-7	1.68E-09	5.47086E-09	2.60E-03	1.180485E-06	1.366315E-05
127-18-4	3.48E-13	7.58534E-13	3.60E-11	1.636735E-14	1.894172E-13
1336-36-3	2.91E-09	7.81687E-09	3.71E-03	1.686695E-06	1.952195E-05
144-62-7	1.23E-14	9.2634E-15	4.40E-09	1.998425E-12	2.313145E-11
208-96-8	2.78E-09	3.52504E-09	1.67E-03	7.60425E-07	8.803475E-06
50-32-8	6.15E-12	1.39555E-11	6.15E-06	2.795485E-09	3.235512E-08
56-23-5	3.46E-23	4.44641E-23	2.11E-17	9.594285E-21	1.110455E-19
60-35-5	3.03E-12	1.49446E-12	7.09E-07	3.224465E-10	3.732285E-09
60-57-1	2.66E-11	8.46536E-11	4.02E-05	1.826625E-08	2.114155E-07
62-73-9	2.57E-09	1.56969E-09	7.55E-04	2.430175E-07	2.970175E-06
75-12-7	7.25E-12	8.4558E-13	4.01E-07	1.824565E-10	2.111765E-09
78-15-3	2.63E-32	3.39551E-32	1.61E-26	7.32668E-30	8.479965E-29
8001-35-2	1.90E-11	6.56221E-11	3.12E-05	1.415975E-08	1.638685E-07
88-89-1	2.39E-14	4.56575E-14	2.17E-08	9.851795E-12	1.140275E-10
126-72-8	4.32E-11	9.18511E-11	4.36E-05	1.981935E-08	2.293935E-07

Component	Aqueous Components mol/L	Lb/gal	Lb/day	Solid Components Lb/day	Total Components Lb/day	Mt/day	g/sec
CO_3^{2-}	0.00E+00	0.00E+00	0.00E+00	1.50E-05	1.50E-05	6.816375E-09	7.889285E-08
Formate	0.00E+00	0.00E+00	0.00E+00	2.78E-07	2.78E-07	1.263195E-10	1.462025E-09
Acetate	0.00E+00	0.00E+00	0.00E+00	1.84E-12	1.84E-12	8.3695E-16	9.686315E-15
Glycolate	0.00E+00	0.00E+00	0.00E+00	1.50E-07	1.50E-07	6.813455E-11	7.907095E-10
EDA	0.00E+00	0.00E+00	0.00E+00	6.80E-09	6.80E-09	3.089825E-12	3.576255E-11
Citrate	0.00E+00	0.00E+00	0.00E+00	2.70E-07	2.70E-07	1.226635E-10	1.419225E-09
HEDTA	0.00E+00	0.00E+00	0.00E+00	1.91E-07	1.91E-07	8.669325E-11	1.003125E-09
EDTA	0.00E+00	0.00E+00	0.00E+00	3.44E-09	3.44E-09	1.563145E-12	1.809355E-11

Appendix B Calculations

CALCULATION SHEET

BY: S. Bernos
DATE: 05/21/03

PROJECT: WTP
JOB NO. 24590
CALC NO.: 24590-WTP-M4C-FRP-00095
SHEET REV. A
SHEET NO. 77

	A	B	C	D	E	F	G	H	I	J	K	L	M	N	O	P
1	Table B-1	Feed Rate	Feed rate	0.871	ft3/min											
2				24.66411	l/min											
3																
4								Feed Rate								
5	CAS #	COPC	Conc (mg/L)	In ACM	Group	Grouping	Phase	g/sec		Coplanar PCBs		PVPU1				
6	100-00-5	p-Nitrochlorobenzene	84.8	No		10	vapor	3.49E-02				g/sec				
7	100-21-0	p-Phthalic acid	84.8	Yes	1	1	vapor	3.49E-02								
8	100-25-4	1,4-Dinitrobenzene	84.8	No		8	particle	3.49E-02		31508-00-6	2,3',4,4',5-Pentachlorobiphenyl (PBC 118)	8.72E-06				
9	100-41-4	Ethyl benzene	18.7	No		20	vapor	7.67E-03		32598-13-3	3,3',4,4'-Tetrachlorobiphenyl (TCB)	8.72E-06		Correction for Coplanar PCBs		
10	100-42-5	Styrene	18.7	No		19	vapor	7.67E-03		32598-14-4	2,3,3',4,4'-Pentachlorobiphenyl (PCB 105)	8.72E-06		0.99	as parent	
11	10061-01-5	cis-1,3-Dichloropropene	18.7	Yes	19	19	vapor	7.67E-03		32774-16-6	3,3',4,4',5,5'-Hexachlorobiphenyl	8.72E-06		0.01	as coplanar sum	
12	10061-02-6	trans-1,3-Dichloropropene	18.7	No		17	vapor	7.67E-03		35065-30-6	2,2',3,3',4,4',5-Heptachlorobiphenyl	8.72E-06				
13	101-55-3	4-Bromophenylphenyl ether	84.8	No		14	vapor	3.49E-02		35065-29-3	2,2',3,3',4,4',5,5'-Heptachlorobiphenyl	8.72E-06				
14	101-84-8	Diphenyl ether	18.7	No		16	vapor	7.67E-03		38380-08-4	2,3,3',4,4',5-Hexachlorobiphenyl (PCB 157)	8.72E-06				
15	106-35-4	3-Heptanone	18.7	No		14	vapor	7.67E-03		39635-31-9	2,3,3',4,4',5,5'-Heptachlorobiphenyl	8.72E-06				
16	106-42-3	p-Xylene (Dimethyl benzene)	18.7	No		19	vapor	7.67E-03		52663-72-6	2,3',4,4',5,5'-Hexachlorobiphenyl	8.72E-06				
17	106-46-7	1,4-Dichlorobenzene	18.7	No		18	vapor	7.67E-03		57465-28-8	3,3',4,4',5-Pentachlorobiphenyl	8.72E-06				
18	106-88-7	1,2-Epoxybutane	18.7	No		18	vapor	7.67E-03		65510-44-3	2',3,4,4',5-Pentachlorobiphenyl	8.72E-06				
19	106-93-4	Ethylene dibromide (Dibromethane)	84.8	Yes	18	18	vapor	3.49E-02		69782-90-7	2,3,3',4,4',5-Hexachlorobiphenyl	8.72E-06				
20	106-97-8	Butane	18.7	Yes	20	20	vapor	7.67E-03		70362-50-4	3,4,4',5-Tetrachlorobiphenyl	8.72E-06				
21	106-99-0	1,3-Butadiene	18.7	Yes	23	23	vapor	7.67E-03		74472-37-0	2,3,4,4',5-Pentachlorobiphenyl	8.72E-06				
22	107-02-8	Acrolein	18.7	No		14	vapor	7.67E-03								
23	107-05-1	3-Chloropropene (Allyl chloride)	18.7	No		20	vapor	7.67E-03		1336-36-3	Polychlorinated biphenyls (PCBs)	1.71E-02				
24	107-06-2	1,2-Dichloroethane (Ethylene chloride)	18.7	No		17	vapor	7.67E-03		11104-28-2	UnCorrected (for coplanar PCBs)	1.22E-02				
25	107-12-0	Propionitrile	18.7	No		13	vapor	7.67E-03								
26	107-13-1	Acrylonitrile	18.7	No		14	vapor	7.67E-03								
27	107-18-6	2-Propene-1-ol	84.8	No		10	vapor	3.49E-02								
28	107-31-3	Formic acid, methyl ester	84.8	No		15	vapor	3.49E-02								
29	107-66-4	Dibutylphosphate	84.8	No		5	particle	3.49E-02								
30	107-87-9	2-Pentanone	18.7	No		14	vapor	7.67E-03								
31	108-03-2	1-Nitropropane	84.8	No		14	vapor	3.49E-02								
32	108-05-4	Vinyl acetate	84.8	No		16	vapor	3.49E-02								
33	108-10-1	Hexone (4-Methyl-2-pentanone or MIBK)	18.7	No		14	vapor	7.67E-03								
34	108-20-3	Bis(isopropyl)ether	18.7	No		18	vapor	7.67E-03								
35	108-38-3	m-Xylene (Dimethyl benzene)	18.7	No		19	vapor	7.67E-03								
36	108-39-4	m-Cresol	18.7	No		9	vapor	7.67E-03								
37	108-87-2	Methylcyclohexane	18.7	Yes	25	25	vapor	7.67E-03								
38	108-88-3	Toluene	18.7	Yes	19	19	vapor	7.67E-03								
39	108-90-7	Chlorobenzene	18.7	No		19	vapor	7.67E-03								
40	108-93-0	Cyclohexanol	18.7	No		10	vapor	7.67E-03								
41	108-94-1	Cyclohexanone	18.7	No		11	vapor	7.67E-03								
42	108-95-2	Phenol	84.8	Yes	8	8	vapor	3.49E-02								
43	109-66-0	n-Pentane	18.7	No		26	vapor	7.67E-03								
44	109-99-9	Tetrahydrofuran	39.6	No		13	vapor	1.63E-02								
45	110-12-3	5-Methyl-2-hexanone	18.7	No		15	vapor	7.67E-03								
46	110-43-0	2-Heptanone	18.7	No		15	vapor	7.67E-03								
47	110-54-3	n-Hexane	18.7	Yes	27	27	vapor	7.67E-03								
48	110-62-3	n-Valeraldehyde	84.8	No		15	vapor	3.49E-02								
49	110-82-7	Cyclohexane	18.7	Yes	24	24	vapor	7.67E-03								
50	110-83-8	Cyclohexene	18.7	No		22	vapor	7.67E-03								
51	110-86-1	Pyridine	84.8	No		11	vapor	3.49E-02								
52	111-65-9	n-Octane	18.7	No		28	vapor	7.67E-03								
53	111-76-2	Ethylene glycol monobutyl ether	84.8	No		9	vapor	3.49E-02								
54	111-84-2	n-Nonane	18.7	Yes	28	28	vapor	7.67E-03								
55	117-81-7	Bis(2-ethylhexyl)phthalate (DEHP)	84.8	No		30	particle	3.49E-02								
56	117-84-0	n-Dioctyl phthalate	84.8	No		32	particle	3.49E-02								
57	118-74-1	Hexachlorobenzene	1.8	Yes	18	18	vapor	7.21E-04								
58	120-12-7	Anthracene	84.8	Yes	13	13	vapor	3.49E-02								
59	120-82-1	1,2,4-Trichlorobenzene	18.7	Yes	17	17	vapor	7.67E-03								
60	120-83-2	2,4-Dichlorophenol	84.8	No		10	vapor	3.49E-02								
61	121-44-8	Triethylamine	18.7	No		15	vapor	7.67E-03								
62	121-69-7	Dimethylaniline	18.7	No		13	vapor	7.67E-03								
63	122-39-4	N,N-Diphenylamine	18.7	Yes	10	10	vapor	7.67E-03								
64	123-19-3	4-Heptanone	18.7	No		13	vapor	7.67E-03								
65	123-38-6	n-Propionaldehyde	18.7	No		14	vapor	7.67E-03								
66	123-51-3	3-Methyl-1-butanol	18.7	No		12	vapor	7.67E-03								
67	123-86-4	Acetic acid n-butyl ester	84.8	No		16	vapor	3.49E-02								
68	123-91-1	1,4-Dioxane	50.9	No		10	vapor	2.09E-02								
69	126-73-8	Tributyl phosphate	84.8	Yes	7	7	vapor	3.49E-02								
70	126-98-7	2-Methyl-2-propenenitrile (Methacrylonitrile)	18.7	No		16	vapor	7.67E-03								
71	127-18-4	Perchloroethylene (tetrachloroethylene)	18.7	Yes	21	21	vapor	7.67E-03								
72	127-19-5	N,N-Dimethylacetamide	18.7	No		5	vapor	7.67E-03								
73	128-37-0	2,6-Bis(tert-butyl)-4-methylphenol	84.8	No		32	vapor	3.49E-02								
74	129-00-0	Pyrene	84.8	Yes	33	33	particle	3.49E-02								
75	1321-64-8	Pentachloronaphthalene	84.8	No		14	particle	3.49E-02								
76	1321-65-9	Trichloronaphthalene	84.8	No		15	vapor	3.49E-02								
77	132-64-9	Dibenzofuran	84.8	Yes	15	15	vapor	3.49E-02								
78	1335-87-1	Hexachloronaphthalene	84.8	No		14	particle	3.49E-02								
79	1335-88-2	Tetrachloronaphthalene	84.8	No		15	particle	3.49E-02								
80	1336-36-3	Polychlorinated biphenyls (PCBs)	29.4	Yes	35	35	particle	1.21E-02								
81	141-78-6	Acetic acid ethyl ester (Ethyl acetate)	84.8	No		14	vapor	3.49E-02								
82	141-79-7	4-Methyl-3-penten-2-one	84.8	No		13	vapor	3.49E-02								
83	142-82-5	n-Heptane	18.7	No		27	vapor	7.67E-03								
84	144-62-7	Oxalic acid	8.5	Yes	3	3	vapor	3.49E-03								
85	156-60-5	trans-1,2-Dichloroethylene	18.7	No		20	vapor	7.67E-03								
86	1582-09-8	Trifluralin	84.8	No		14	particle	3.49E-02								
87	1634-04-4	Methyl tert-butyl ether	18.7	No		16	vapor	7.67E-03								
88	1836-75-5	Nitrofen	84.8	No		30	particle	3.49E-02								
89	189-55-9	Dibenzo(a,i)pyrene	84.8	No		5	particle	3.49E-02								
90	189-64-0	Dibenzo(a,h)pyrene	84.8	No		5	particle	3.49E-02								
91	191-24-2	Benzo(g,h,i)perylene	84.8	No		30	particle	3.49E-02								
92	191-30-0	Benzo(a,l)pyrene	84.8	No		5	particle	3.49E-02								
93	192-65-4	Dibenzo(a,e)pyrene	84.8	No		5	particle	3.49E-02								
94	193-39-5	Indeno(1,2,3-cd)pyrene	84.8	No		30	particle	3.49E-02								
95	205-82-3	Benzo(j)fluoranthene	84.8	No		7	particle	3.49E-02								
96	205-99-2	Benzo(b)fluoranthene	84.8	No		30	particle	3.49E-02								
97	206-44-0	Fluoranthene	84.8	No		33	particle	3.49E-02								
98	207-08-9	Benzo(k)fluoranthene	84.8	No		30	particle	3.49E-02								
99	208-96-8	Acenaphthylene	84.8	Yes	14	14	vapor	3.49E-02								
100	218-01-9	Chrysene	84.8	Yes	32	32	particle	3.49E-02								
101	2234-13-1	Octachloronaphthalene	84.8	No		14	particle	3.49E-02								
102	224-42-0	Dibenz(a,j)acridine	84.8	No		4	particle	3.49E-02								
103	226-36-8	Dibenz(a,h)acridine	84.8	No		4	particle	3.49E-02								
104	2385-85-5	Mirex	84.8	No		17	vapor	3.49E-02								
105	25551-13-7	Trimethyl benzene	18.7	No		19	vapor	7.67E-03								
106	26140-60-3	Terphenyls	84.8	No		34	particle	3.49E-02								
107	27154-33-2	Trichlorofluoroethane	18.7	No		23	vapor	7.67E-03								
108	287-92-3	Cyclopentane	18.7	No		24	vapor	7.67E-03								
109	309-00-2	Aldrin	1.0	Yes	34	34	particle	4.30E-04								
110	319-84-6	Hexachlorocyclohexane (Lindane) Alpha BHC	0.3	No		33	vapor	1.16E-04								
111	319-85-7	Hexachlorocyclohexane (Lindane) Beta BHC	0.3	Yes	30	30	particle	1.16E-04								
112	319-86-8	Delta-BHC	0.3	No		30	particle	1.16E-04								
113	3697-24-3	5-Methylchrysene	84.8	No		32	particle	3.49E-02								
114	3825-26-1	Ammonium perfluorooctanoate	84.8	No		14	particle	3.49E-02								
115	4170-30-3	2-Butenaldehyde (2-Butenal or Crotonaldehyde)	18.7	Yes	11	11	vapor	7.67E-03								
116	465-73-6	Isodrin	0.6	No		35	vapor	2.32E-04								
117	50-00-0	Formaldehyde	18.7	No		8	vapor	7.67E-03								
118	50-29-3	4,4-DDT	0.6	No		33	particle	2.32E-04								
119	50-32-8	Benzo(a)pyrene	1.1	Yes	30	30	particle	4.42E-04								
120	53-70-3	Dibenzo(a,h)anthracene	0.1	No		7	particle	5.81E-05								
121	540-59-0	1,2-Dichloroethylene	18.7	No		19	vapor	7.67E-03								
122	540-84-1	2,2,4-Trimethylpentane	18.7	No		28	vapor	7.67E-03								
123	541-73-1	1,3-Dichlorobenzene	18.7	No		19	vapor	7.67E-03								
124	56-23-5	Carbon tetrachloride	18.7	Yes	22	22	vapor	7.67E-03								
125	563-80-4	3-Methyl-2-butanone	18.7	No		14	vapor	7.67E-03								
126	56-49-5	3-Methylcholanthrene	84.8	No		28	particle	3.49E-02								
127	56-55-3	Benzo(a)anthracene	84.8	No		33	particle	3.49E-02								
128	57-14-7	1,1-Dimethylhydrazine	84.8	Yes	12	12	vapor	3.49E-02								
129	58-89-9	gamma-BHC (Lindane)	0.3	Yes	32	32	particle	1.16E-04								
130	58-90-2	2,3,4,6-Tetrachlorophenol	84.8	Yes	11	11	vapor	3.49E-02								
131	591-78-6	2-Hexanone	18.7	No		14	vapor	7.67E-03								
132	59-50-7	4-Chloro-3-methylphenol	84.8	No		32	particle	3.49E-02								
133	59-89-2	N-Nitrosomorpholine	84.8	No		8	vapor	3.49E-02								
134	602-87-9	5-Nitroacenaphthene	84.8	No		9	particle	3.49E-02								
135	60-29-7	Ethyl ether	84.8	No		17	vapor	3.49E-02								
136	603-34-9	Triphenylamine	84.8	Yes	32	32	vapor	3.49E-02								
137	60-34-4	Methylhydrazine	18.7	No		10	vapor	7.67E-03								
138	60-35-5	Acetamide	18.7	Yes	5	5	vapor	7.67E-03								
139	60-57-1	Dieldrin	0.6	Yes	33	33	particle	2.32E-04								
140	621-64-7	Di-n-Propylnitrosamine (N-Nitroso-di-n-propylamine)	84.8	No		10	vapor	3.49E-02								
141	624-83-9	Methyl isocyanate	18.7	No		17	vapor	7.67E-03								
142	627-13-4	Nitric acid, propyl ester	84.8	No		17	vapor	3.49E-02								
143	62-75-9	N-Nitroso-N,N-dimethylamine (Dimethylnitrosamine)	159.4	Yes	9	9	vapor	6.51E-02								
144	630-20-6	1,1,1,2-Tetrachloroethane	18.7	No		18	vapor	7.67E-03								
145	64-17-5	Ethyl alcohol	18.7	No		10	vapor	7.67E-03								
146	64-18-6	Formic acid	84.8	No		7	vapor	3.49E-02								
147	64-19-7	Acetic acid	84.8	No		8	vapor	3.49E-02								
148	67-56-1	Methyl alcohol (Methanol)	18.7	No		10	vapor	7.67E-03								
149	67-63-0	2-Propyl alcohol (Isopropanol, Propan-2-ol)	18.7	No		11	vapor	7.67E-03								
150	67-64-1	2-Propanone (Acetone)	101.8	No		13	vapor	4.18E-02								
151	67-66-3	Chloroform	18.7	No		18	vapor	7.67E-03								

CALCULATION SHEET

BY E Benlos
DATE 05/21/03

PROJECT WTP
JOB NO 24590
CALC NO. 24590-WTP-M4C-FRP-00005
SHEET REV A
SHEET NO 78

	A	B	C	D	E	F	G	H
4								Feed Rate
5	CAS #	COPC	Conc (mg/L)	In ACM	Group	Grouping	Phase	g/sec
152	67-72-1	Hexachloroethane	84.8	No		19	vapor	3.49E-02
153	684-16-2	Hexafluoroacetone	18.7	No		19	vapor	7.67E-03
154	71-23-8	n-Propyl alcohol	18.7	No		11	vapor	7.67E-03
155	71-36-3	n-Butyl alcohol	18.7	No		11	vapor	7.67E-03
156	71-43-2	Benzene	18.7	Yes	19	19	vapor	7.67E-03
157	71-55-6	Methyl chloroform (1,1,1-Trichloroethane)	18.7	No		21	vapor	7.67E-03
158	72-20-8	Endrin	0.6	No		32	particle	2.32E-04
159	72-43-5	Methoxychlor	2.8	No		7	particle	1.16E-03
160	72-54-8	4,4-DDD	0.6	No		32	particle	2.32E-04
161	72-55-9	4,4-DDE	0.6	No		34	particle	2.32E-04
162	74-83-9	Bromomethane (Methyl bromide)	18.7	No		19	vapor	7.67E-03
163	74-87-3	Chloromethane (Methyl chloride)	18.7	No		20	vapor	7.67E-03
164	74-97-5	Bromochloromethane	18.7	No		17	vapor	7.67E-03
165	74-99-7	Methylacetylene	84.8	No		20	vapor	3.49E-02
166	75-00-3	Chloroethane	18.7	No		20	vapor	7.67E-03
167	75-01-4	Vinyl chloride (1-Chloroethene)	84.8	No		22	vapor	3.49E-02
168	75-05-8	Acetonitrile	26.6	Yes	13	13	vapor	1.09E-02
169	75-07-0	Acetaldehyde	84.8	No		13	vapor	3.49E-02
170	75-09-2	Dichloromethane (Methylene chloride)	18.7	No		19	vapor	7.67E-03
171	75-12-7	Formamide	84.8	Yes	4	4	vapor	3.49E-02
172	75-15-0	Carbon disulfide	18.7	No		20	vapor	7.67E-03
173	75-21-8	Ethylene oxide (Oxirane)	18.7	No		15	vapor	7.67E-03
174	75-27-4	Bromodichloromethane	18.7	No		18	vapor	7.67E-03
175	75-34-3	1,1-Dichloroethane	18.7	No		18	vapor	7.67E-03
176	75-35-4	1,1-Dichloroethene (Vinylidene chloride)	18.7	No		22	vapor	7.67E-03
177	75-43-4	Dichlorofluoromethane	18.7	No		20	vapor	7.67E-03
178	75-45-6	Chlorodifluoromethane	18.7	No		22	vapor	7.67E-03
179	75-50-3	Trimethylamine	18.7	No		14	vapor	7.67E-03
180	75-52-5	Nitromethane	84.8	No		13	vapor	3.49E-02
181	75-55-8	2-Methylaziridine	84.8	No		11	vapor	3.49E-02
182	75-61-6	Difluorodibromomethane	18.7	No		22	vapor	7.67E-03
183	75-63-8	Trifluorobromomethane	18.7	No		25	vapor	7.67E-03
184	75-65-0	2-Methyl-2-propanol	18.7	No		11	vapor	7.67E-03
185	75-69-4	Trichlorofluoromethane	18.7	No		23	vapor	7.67E-03
186	75-71-8	Dichlorodifluoromethane	18.7	No		25	vapor	7.67E-03
187	75-99-0	2,2-Dichloropropionic acid	84.8	No		6	vapor	3.49E-02
188	76-03-9	Trichloroacetic acid	18.7	No		6	vapor	7.67E-03
189	76-11-9	1,1,1,2-Tetrachloro-2,2-difluoroethane	84.8	No		24	vapor	3.49E-02
190	76-12-0	1,1,2,2-Tetrachloro-1,2-difluoroethane	84.8	No		23	vapor	3.49E-02
191	76-13-1	1,2,2-Trichloro-1,1,2-trifluoroethane (Freon 113)	18.7	No		25	vapor	7.67E-03
192	76-14-2	1,2-Dichloro-1,1,2,2-tetrafluoroethane	18.7	No		28	vapor	7.67E-03
193	76-15-3	Chloropentafluoroethane	18.7	Yes	29	29	vapor	7.67E-03
194	76-44-8	Heptachlor	1.8	Yes	16	16	vapor	7.56E-04
195	78-83-1	2-Methylpropyl alcohol (Isobutyl alcohol)	84.8	No		11	vapor	3.49E-02
196	78-87-5	1,2-Dichloropropane	18.7	No		19	vapor	7.67E-03
197	78-92-2	1-Methylpropyl alcohol (2-Butanol)	18.7	No		11	vapor	7.67E-03
198	78-93-3	Methyl ethyl ketone (MEK, 2-Butanone)	18.7	No		13	vapor	7.67E-03
199	79-00-5	1,1,2-Trichloroethane	18.7	No		17	vapor	7.67E-03
200	79-01-6	Trichloroethylene	18.7	Yes	20	20	vapor	7.67E-03
201	79-09-4	Propionic acid	84.8	No		8	vapor	3.49E-02
202	79-10-7	2-Propenoic acid	84.8	No		8	vapor	3.49E-02
203	79-20-9	Methyl acetate	84.8	No		14	vapor	3.49E-02
204	79-34-5	1,1,2,2-Tetrachloroethane	18.7	No		16	vapor	7.67E-03
205	8001-35-2	Toxaphene	0.7	Yes	10	10	particle	2.67E-04
206	82-68-8	Pentachloronitrobenzene (PCBN or quintobenzene)	84.8	No		13	vapor	3.49E-02
207	83-32-9	Acenaphthene	84.8	No		15	vapor	3.49E-02
208	84-66-2	Diethyl phthalate	84.8	Yes	8	8	vapor	3.49E-02
209	84-74-2	Dibutyl phthalate	84.8	Yes	31	31	particle	3.49E-02
210	85-01-8	Phenanthrene	84.8	No		13	vapor	3.49E-02
211	85-68-7	Butylbenzyl phthalate	84.8	No		31	particle	3.49E-02
212	86-73-7	Fluorene	84.8	No		14	particle	3.49E-02
213	87-68-3	Hexachlorobutadiene	18.7	Yes	20	20	vapor	7.67E-03
214	87-86-5	Pentachlorophenol	84.8	Yes	6	6	vapor	3.49E-02
215	88-06-2	2,4,6-Trichlorophenol	84.8	No		10	vapor	3.49E-02
216	88-72-2	2-Nitrotoluene	18.7	No		12	vapor	7.67E-03
217	88-75-5	2-Nitrophenol	84.8	No		12	vapor	3.49E-02
218	88-85-7	2-sec-Butyl-4,6-dinitrophenol (Dinoseb)	84.8	Yes	8	8	particle	3.49E-02
219	88-89-1	Picric acid	84.8	Yes	2	2	particle	3.49E-02
220	91-20-3	Naphthalene	2.8	Yes	16	16	vapor	1.16E-03
221	91-22-5	Quinoline	84.8	No		9	vapor	3.49E-02
222	91-58-7	2-Chloronaphthalene	84.8	No		16	vapor	3.49E-02
223	92-52-4	1,1'-Biphenyl	84.8	No		16	vapor	3.49E-02
224	92-93-3	4-Nitrobiphenyl	84.8	No		10	particle	3.49E-02
225	93-72-1	Silvex (2,4,5-TP)	84.8	No		5	particle	3.49E-02
226	93-76-5	2,4,5-T	84.8	No		5	particle	3.49E-02
227	94-75-7	2,4-D and esters (1800 types)	84.8	No		6	vapor	3.49E-02
228	95-13-6	Indene	84.8	No		18	vapor	3.49E-02
229	95-47-6	o-Xylene	18.7	No		19	vapor	7.67E-03
230	95-48-7	o-Cresol (2-Methylphenol)	18.7	No		9	vapor	7.67E-03
231	95-49-8	2-Chlorotoluene	84.8	No		19	vapor	3.49E-02
232	95-50-1	o-Dichlorobenzene (1,2-Dichlorobenzene)	18.7	No		18	vapor	7.67E-03
233	95-57-8	2-Chlorophenol	84.8	No		11	vapor	3.49E-02
234	95-95-4	2,4,5-Trichlorophenol	84.8	No		9	vapor	3.49E-02
235	96-22-0	3-Pentanone	18.7	No		14	vapor	7.67E-03
236	96-69-5	Bis(1-tert-butyl-4-hydroxy-6-methyl-phenyl)sulfide	84.8	No		19	particle	3.49E-02
237	98-51-1	p-tert-Butyltoluene	84.8	No		21	vapor	3.49E-02
238	98-82-8	Cumene	84.8	No		20	vapor	3.49E-02
239	98-83-9	alpha-Methylstyrene	18.7	No		19	vapor	7.67E-03
240	98-86-2	Acetophenone	84.8	Yes	11	11	vapor	3.49E-02
241	98-95-3	Nitrobenzene	84.8	No		12	vapor	3.49E-02

Table B-2 PVP01 - Unabated Pretreatment Vessel Vent System

	A	B	C	D	E	F	G	H	I	J	K
2			Feed Rate					PVP01 raw	Performance	Adjusted	Calc'd raw PVP01
3	CAS #	COPC	g/sec	In ACM	Group	Grouping	Phase	g/sec	Factor	PF	g/sec
4	100-0[illegible]	p-Nitrochlorobenzene	[illegible]	No		15	vapor			[illegible]	[illegible]
5	100-21-0	p-Phthalic acid	[illegible]	Yes	1	1	vapor	[illegible]	[illegible]		[illegible]
6	106-[illegible]	1,4-Dichlorobenzene	[illegible]	No		5	particle			[illegible]	[illegible]
7	100-41-4	Ethyl benzene	[illegible]	No		[illegible]	vapor			[illegible]	[illegible]
8	100-42-5	Styrene	[illegible]	No		18	vapor			[illegible]	[illegible]
9	10061-01-5	cis-1,3-Dichloropropene	[illegible]	Yes	19	19	vapor	[illegible]	[illegible]		[illegible]
10	10061-02-6	trans-1,3-Dichloropropene	[illegible]	No		17	vapor			[illegible]	[illegible]
11	101-55-3	4-Bromophenyl phenyl ether	[illegible]	No		14	vapor			[illegible]	[illegible]
12	101-84-8	Diphenyl ether	[illegible]	No		16	vapor			[illegible]	[illegible]
13	106-35-4	3-Heptanone	[illegible]	No		14	vapor			[illegible]	[illegible]
14	106-42-3	p-Xylene (Dimethyl benzene)	[illegible]	No		19	vapor			[illegible]	[illegible]
15	106-4[illegible]	1,4-Dichlorobenzene	[illegible]	No		[illegible]	vapor			[illegible]	[illegible]
16	106-88-7	1,2-Epoxybutane	[illegible]	No		[illegible]	vapor			[illegible]	[illegible]
17	106-93-4	Ethylene dibromide (Dibromoethane)	[illegible]	Yes	18	18	vapor	[illegible]	[illegible]		[illegible]
18	106-97-8	Butane	[illegible]	Yes	26	26	vapor	[illegible]	[illegible]		[illegible]
19	106-99-0	1,3-Butadiene	[illegible]	Yes	23	23	vapor	[illegible]	[illegible]		[illegible]
20	107-02-8	Acrolein	[illegible]	No		[illegible]	vapor			[illegible]	[illegible]
21	107-05-1	3-Chloropropene (Allyl chloride)	[illegible]	No		20	vapor			[illegible]	[illegible]
22	107-06-2	1,2-Dichloroethane (Ethylene chloride)	[illegible]	No		17	vapor			[illegible]	[illegible]
23	107-12-0	Propionitrile	[illegible]	No		13	vapor			[illegible]	[illegible]
24	107-13-1	Acrylonitrile	[illegible]	No		13	vapor			[illegible]	[illegible]
25	107-18-6	2-Propene-1-ol	[illegible]	No		12	vapor			[illegible]	[illegible]
26	107-31-3	Formic acid, methyl ester	[illegible]	No		13	vapor			[illegible]	[illegible]
27	107-[illegible]	[illegible]	[illegible]	No		3	particle			[illegible]	[illegible]
28	107-87-9	2-Pentanone	[illegible]	No		13	vapor			[illegible]	[illegible]
29	108-03-2	1-Nitropropane	[illegible]	No		13	vapor			[illegible]	[illegible]
30	108-05-4	Vinyl acetate	[illegible]	No		15	vapor			[illegible]	[illegible]
31	108-10-1	Hexone (4-Methyl-2-pentanone or MIBK)	[illegible]	No		14	vapor			[illegible]	[illegible]
32	108-20-3	Diisopropyl ether	[illegible]	No		18	vapor			[illegible]	[illegible]
33	108-38-3	m-Xylene (Dimethyl benzene)	[illegible]	No		19	vapor			[illegible]	[illegible]
34	108-39-4	m-Cresol	[illegible]	No		9	vapor			[illegible]	[illegible]
35	108-87-2	Methylcyclohexane	[illegible]	Yes	20	20	vapor	[illegible]	[illegible]		[illegible]

CALCULATION SHEET

BY: E. Barker
DATE: 04/21/05

PROJECT: WTP
JOB NO.: 24590
CALC NO.: 24590-WTP-M4C-[illegible]
SHEET REV: A
SHEET NO.: [illegible]

	A	B	C	D	E	F	G	H	I	J	K	L	M	N	O	P	Q	R	S	T	U	V	W
1	Table B-3 PVP01 - Unabated Pretreatment Vessel Vent System																						
2			Feed Rate					PVP01 Inlet	Performance	Adjusted	Calculated PVP01												
3	CAS #	COPC	g/sec	Is ACM	Gross	Grossing	Phase	g/sec	Factor	PF	g/sec		Adjusted Performance Factors										
203	79-34-5	1,1,2,2-Tetrachloroethane	7.87E-03	No		16	vapor			9.37E-01	7.18E-03												
204	8001-35-2	Toxaphene	2.87E-04	Yes	10	10	particle	2.34E-05	8.71E-02		2.34E-05												
205	82-68-8	Pentachloronitrobenzene (PCNB) or quintobenzene	3.49E-02	No		13	vapor			3.88E-01	1.35E-02												
206	83-32-9	Acenaphthene	3.49E-02	No		16	vapor			8.52E-01	2.97E-02												
207	84-66-2	Diethyl phthalate	3.49E-02	Yes	8	8	vapor	3.97E-04	1.14E-02		3.97E-04												
208	84-74-2	Dibutyl phthalate	3.49E-02	Yes	31	31	particle	1.47E-03	3.08E-02		1.07E-03												
209	85-01-8	Phenanthrene	3.49E-02	No		13	vapor			3.88E-01	1.35E-02												
210	85-68-7	Butylbenzyl phthalate	3.49E-02	No		51	particle			3.08E-02	1.07E-03												
211	86-73-7	Fluorene	3.49E-02	No		14	particle			6.92E-01	2.41E-02												
212	87-68-3	Hexachlorobutadiene	7.87E-03	Yes	20	20	vapor	7.70E-03	1.30E-00		7.70E-03												
213	87-86-5	Pentachlorophenol	3.49E-02	Yes	6	6	vapor	2.15E-05	8.14E-04		2.15E-05												
214	88-06-2	2,4,6-Trichlorophenol	3.49E-02	No		10	vapor			6.88E-02	2.37E-03												
215	88-72-2	2-Nitrotoluene	7.87E-03	No		12	vapor			1.43E-01	1.08E-03												
216	88-75-5	2-Nitrophenol	3.49E-02	No		12	vapor			1.43E-01	4.99E-03												
217	88-85-7	2-sec-Butyl-4,6-dinitrophenol (Dinoseb)	3.49E-02	Yes	8	8	particle	4.08E-04	1.17E-02		4.08E-04												
218	88-89-1	Picric acid	3.49E-02	Yes	2	2	particle	6.84E-06	1.96E-06		6.84E-06												
219	91-20-3	Naphthalene	1.18E-03	Yes	15	15	vapor	1.10E-03	9.47E-01		1.10E-03												
220	91-22-5	Quinoline	3.49E-02	No		8	vapor			2.72E-02	9.48E-04												
221	91-58-7	2-Chloronaphthalene	3.49E-02	No		16	vapor			9.37E-01	3.27E-02												
222	92-52-4	1,1'-Biphenyl	3.49E-02	No		16	vapor			9.37E-01	3.27E-02												
223	92-93-3	4-Nitrobiphenyl	3.49E-02	No		10	particle			6.88E-02	2.37E-03												
224	93-72-1	Silvex (2,4,5-TP)	3.49E-02	No		5	particle			2.85E-04	9.95E-06												
225	93-76-5	2,4,5-T	3.49E-02	No		5	particle			2.85E-04	9.95E-06												
226	94-75-7	2,4-D and salts (1990C type)	3.49E-02	No		8	vapor			6.15E-04	2.15E-05												
227	95-13-6	Indene	3.49E-02	No		18	vapor			1.02E+00	3.57E-02												
228	95-47-6	o-Xylene	7.87E-03	No		19	vapor			1.00E+00	7.78E-03												
229	95-48-7	o-Cresol (2-Methylphenol)	7.87E-03	No		9	vapor			2.72E-02	2.08E-04												
230	95-49-8	2-Chlorotoluene	3.49E-02	No		15	vapor			1.02E+00	3.57E-02												
231	95-50-1	o-Dichlorobenzene (1,2-Dichlorobenzene)	7.87E-03	No		18	vapor			1.02E+00	7.86E-03												
232	95-57-8	2-Chlorophenol	3.49E-02	No		11	vapor			1.13E-01	3.97E-03												
233	95-95-4	2,4,5-Trichlorophenol	3.49E-02	No		9	vapor			2.72E-02	9.48E-04												
234	96-31-0	3-Pentanone	7.87E-03	No		14	vapor			6.92E-01	5.31E-03												
235	96-69-5	Bis(1-methyl-4-hydroxy-6-methylphenol)sulfide	3.49E-02	No		19	particle			1.00E+00	3.50E-02												
236	98-51-1	p-tert-Butyltoluene	3.49E-02	No		21	vapor			1.01E+00	3.51E-02												
237	98-82-8	Cumene	3.49E-02	No		20	vapor			1.00E+00	3.50E-02												
238	98-83-9	alpha-Methylstyrene	7.87E-03	No		9	vapor			1.00E+00	7.78E-03												
239	98-86-2	Acetophenone	3.49E-02	Yes	11	11	vapor	4.10E-02	1.20E-01		4.10E-02												
240	99-65-3	Nitrobenzene	3.49E-02	No		12	vapor			1.43E-01	4.99E-03												
241											2.01E+00												

CALCULATION SHEET

BY: B. Barnes
DATE: 05/21/03

PROJECT: WTP
JOB NO.: 24590
CALC NO.: 24590-WTP-M4C-FRP-00005
SHEET REV: A
SHEET NO.: 41

	A	B	C	D	E	F	G	H	I	J	K	L	M	N	O	P	Q	R
1	Table B-3 PVP12 - Abated Pretreatment Vessel Vent System			NaOH														
2			PVP01	Scrubber DF	HEME DF	HEPA 1 DF	HEPA 2 DF	TCO DF	Carbon Bed DF	PVP12								
3	CAS #	COPC	g/sec							g/sec								
4	100-00-5	p-Nitrochlorobenzene	2.32E-03	1	1	1	1	10000	5	4.65E-08		Coplanar PCBs		PVP12				
5	100-21-0	p-Phthalic acid	3.86E-08	1	1	1	1	20	50	3.86E-11				g/sec				
6	100-25-4	1,4-Dinitrobenzene	2.15E-03	3.3	200	2000	100	10000	5	3.25E-11		31508-00-6	2,3',4,4',5-Pentachlorobiphenyl (PBC 118)	1.90E-15				
7	100-41-4	Ethyl benzene	7.69E-03	1	1	1	1	10000	1	7.69E-07		32598-13-3	3,3',4,4'-Tetrachlorobiphenyl (TCB)	1.90E-15		Correction for Coplanar PCBs		
8	100-42-5	Styrene	7.70E-03	1	1	1	1	10000	1	7.70E-07		32598-14-4	2,3,3',4,4'-Pentachlorobiphenyl (PCB 105)	1.90E-15		0.99 as parent		
9	10061-01-5	cis-1,3-Dichloropropene	7.72E-03	1	1	1	1	100	1	7.72E-05		32774-16-6	3,3',4,4',5,5'-Hexachlorobiphenyl	1.90E-15		0.01 as coplanar sum		
10	10061-02-6	trans-1,3-Dichloropropene	7.66E-03	1	1	1	1	50	1	1.53E-04		35065-29-3	2,2',3,4,4',5,5'-Heptachlorobiphenyl	1.90E-15				
11	101-55-3	4-Bromophenyl phenyl ether	2.41E-02	1	1	1	1	3.333333	50	1.45E-04		35065-30-6	2,2',3,3',4,4',5-Heptachlorobiphenyl	1.90E-15				
12	101-84-8	Diphenyl ether	7.70E-03	1	1	1	1	50	5	3.07E-05		38380-08-4	2,3,3',4,4',5-Hexachlorobiphenyl (PCB 157)	1.90E-15				
13	106-35-4	3-Heptanone	5.31E-03	1	1	1	1	10000	1	5.31E-07		39635-31-9	2,3,3',4,4',5,5'-Heptachlorobiphenyl	1.90E-15				
14	106-42-3	p-Xylene (Dimethyl benzene)	7.70E-03	1	1	1	1	1000	1	7.70E-06		52663-72-6	2,3',4,4',5,5'-Hexachlorobiphenyl	1.90E-15				
15	106-46-7	1,4-Dichlorobenzene	7.86E-03	1	1	1	1	50	2	7.86E-05		57465-28-8	3,3',4,4',5-Pentachlorobiphenyl	1.90E-15				
16	106-88-7	1,2-Epoxybutane	6.54E-03	1	1	1	1	10000	1	6.54E-07		65510-44-3	2',3,4,4',5-Pentachlorobiphenyl	1.90E-15				
17	106-93-4	Ethylene dibromide (Dibromoethane)	3.41E-02	1	1	1	1	1	10	3.41E-03		69782-90-7	2,3,3',4,4',5'-Hexachlorobiphenyl	1.90E-15				
18	106-97-8	Butane	7.71E-03	1	1	1	1	10000	1	7.71E-07		70362-50-4	3,4,4',5-Tetrachlorobiphenyl	1.90E-15				
19	106-99-0	1,3-Butadiene	7.71E-03	1	1	1	1	10000	1	7.71E-07		74472-37-0	2,3,4,4',5-Pentachlorobiphenyl	1.90E-15				
20	107-02-8	Acrolein	6.31E-03	1	1	1	1	10000	1	6.31E-07								
21	107-05-1	3-Chloropropene (Allyl chloride)	7.69E-03	1	1	1	1	10000	1	7.69E-07		1336-36-3	Polychlorinated biphenyls (PCBs)	2.63E-12				
22	107-06-2	1,2-Dichloroethane (Ethylene dichloride)	7.66E-03	1	1	1	1	10000	1	7.66E-07		1336-36-3	UnCorrected (for coplanar PCBs)	[illegible]				
23	107-12-0	Propionitrile	3.06E-03	1	1	1	1	10000	1	3.06E-07								
24	107-13-1	Acrylonitrile	5.31E-03	1	1	1	1	10000	1	5.31E-07								
25	107-18-6	2-Propene-1-ol	2.32E-03	1	1	1	1	10000	1	2.32E-07								
26	107-31-3	Formic acid, methyl ester	2.87E-03	1	1	1	1	10000	1	2.87E-07								
27	107-66-4	Dibutylphosphate	5.95E-06	3.3	200	2000	100	10000	1	[illegible]								
28	107-87-9	2-Pentanone	5.31E-03	1	1	1	1	10000	1	5.31E-07								
29	108-03-2	1-Nitropropane	2.41E-02	1	1	1	1	10000	1	2.41E-06								
30	108-05-4	Vinyl acetate	3.27E-02	1	1	1	1	10000	1	3.27E-06								
31	108-10-1	Hexone (4-Methyl-2-pentanone or MIBK)	5.31E-03	1	1	1	1	10000	1	5.31E-07								
32	108-20-3	Diisopropyl ether	7.80E-03	1	1	1	1	10000	1	7.80E-07								
33	108-38-3	m-Xylene (Dimethyl benzene)	7.70E-03	1	1	1	1	1000	1	7.70E-06								
34	108-39-4	m-Cresol	2.08E-04	1	1	1	1	1000	2	1.04E-07								
35	108-87-2	Methylcyclohexane	7.68E-03	1	1	1	1	10000	1	7.68E-07								
36	108-88-3	Toluene	7.70E-03	1	1	1	1	10000	1	7.70E-07								
37	108-90-7	Chlorobenzene	7.70E-03	1	1	1	1	20	5	7.70E-05								
38	108-93-0	Cyclohexanol	5.11E-04	1	1	1	1	10000	2	2.56E-08								
39	108-94-1	Cyclohexanone	8.63E-04	1	1	1	1	10000	2	4.32E-08								
40	108-95-2	Phenol	2.41E-04	1	1	1	1	10	20	1.21E-06								
41	109-66-0	n-Pentane	7.71E-03	1	1	1	1	10000	1	7.71E-07								
42	109-99-9	Tetrahydrofuran	6.47E-03	1	1	1	1	10000	1	6.47E-07								
43	110-12-3	5-Methyl-2-hexanone	6.54E-03	1	1	1	1	10000	1	6.54E-07								
44	110-43-0	2-Heptanone	6.54E-03	1	1	1	1	10000	1	6.54E-07								
45	110-54-3	n-Hexane	7.70E-03	1	1	1	1	10000	1	7.70E-07								
46	110-62-3	n-Valeraldehyde	2.97E-02	1	1	1	1	10000	1	2.97E-06								
47	110-82-7	Cyclohexane	7.69E-03	1	1	1	1	10000	1	7.69E-07								
48	110-83-8	Cyclohexene	7.73E-03	1	1	1	1	10000	1	7.73E-07								
49	110-86-1	Pyridine	3.92E-03	1	1	1	1	10000	1	3.92E-07								
50	111-65-9	n-Octane	7.71E-03	1	1	1	1	10000	1	7.71E-07								
51	111-76-2	Ethylene glycol monobutyl ether	9.48E-04	1	1	1	1	10000	2	4.74E-08								
52	111-84-2	n-Nonane	7.71E-03	1	1	1	1	10000	2	3.86E-07								
53	117-81-7	Bis(2-ethylhexyl)phthalate (DEHP)	3.87E-04	3.3	200	2000	100	10000	5	[illegible]								
54	117-84-0	n-Dioctyl phthalate	2.52E-03	3.3	200	2000	100	10000	5	[illegible]								
55	118-74-1	Hexachlorobenzene	7.39E-04	1	1	1	1	3.333333	50	4.43E-06								
56	120-12-7	Anthracene	1.62E-02	1	1	1	1	1000	5	3.25E-06								
57	120-82-1	1,2,4-Trichlorobenzene	7.66E-03	1	1	1	1	100	5	1.53E-05								
58	120-83-2	2,4-Dichlorophenol	2.32E-03	1	1	1	1	3.333333	50	1.39E-05								
59	121-44-8	Triethylamine	6.54E-03	1	1	1	1	10000	1	6.54E-07								
60	121-69-7	Dimethylaniline	3.06E-03	1	1	1	1	10000	2	1.53E-07								
61	122-39-4	N,N-Diphenylamine	3.51E-04	1	1	1	1	50	5	1.41E-06								
62	123-19-3	4-Heptanone	3.06E-03	1	1	1	1	10000	1	3.06E-07								
63	123-38-6	n-Propionaldehyde	5.31E-03	1	1	1	1	10000	1	5.31E-07								
64	123-51-3	3-Methyl-1-butanol	1.06E-03	1	1	1	1	10000	1	1.06E-07								
65	123-86-4	Acetic acid n-butyl ester	3.27E-02	1	1	1	1	10000	1	3.27E-06								
66	123-91-1	1,4-Dioxane	1.39E-03	1	1	1	1	10000	1	1.39E-07								
67	126-73-8	Tributyl phosphate	1.20E-04	1	1	1	1	10000	5	2.41E-09								
68	126-98-7	2-Methyl-2-propenenitrile (Methacrylonitrile)	7.19E-03	1	1	1	1	10000	1	7.19E-07								
69	127-18-4	Perchloroethylene (tetrachloroethylene)	7.72E-03	1	1	1	1	1	10	7.72E-04								
70	127-19-5	N,N-Dimethylacetamide	[illegible]	1	1	1	1	10000	2	[illegible]								
71	128-37-0	2,6-Bis(tert-butyl)-4-methylphenol	2.52E-03	1	1	1	1	10000	5	5.03E-08								
72	129-00-0	Pyrene	5.32E-03	3.3	200	2000	100	3.333333	50	2.42E-13								
73	1321-64-8	Pentachloronaphthalene	2.41E-02	3.3	200	2000	100	3.333333	50	1.10E-12								
74	1321-65-9	Trichloronaphthalene	2.97E-02	1	1	1	1	3.333333	50	1.78E-04								
75	132-64-9	Dibenzofuran	2.97E-02	1	1	1	1	3.333333	50	1.78E-04								
76	1335-87-1	Hexachloronaphthalene	2.41E-02	3.3	200	2000	100	3.333333	50	1.10E-12								
77	1335-88-2	Tetrachloronaphthalene	2.97E-02	3.3	200	2000	100	3.333333	50	1.35E-12								
78	1336-36-3	Polychlorinated biphenyls (PCBs)	5.79E-02	3.3	200	2000	100	3.333333	50	2.63E-12								
79	141-78-6	Acetic acid ethyl ester (Ethyl acetate)	2.41E-02	1	1	1	1	10000	1	2.41E-06								
80	141-79-7	4-Methyl-3-penten-2-one	1.39E-02	1	1	1	1	10000	1	1.39E-06								
81	142-82-5	n-Heptane	7.70E-03	1	1	1	1	10000	1	7.70E-07								
82	144-62-7	Oxalic acid	1.58E-08	1	1	1	1	10	20	7.91E-11								
83	156-60-5	trans-1,2-Dichloroethylene	7.69E-03	1	1	1	1	10000	1	7.69E-07								
84	1582-09-8	Trifluralin	2.41E-02	3.3	200	2000	100	10000	1	[illegible]								
85	1634-04-4	Methyl tert-butyl ether	7.19E-03	1	1	1	1	10000	1	7.19E-07								
86	1836-75-5	Nitrofen	3.67E-04	3.3	200	2000	100	3.333333	50	1.67E-14								
87	189-55-9	Dibenzo(a,i)pyrene	9.95E-06	3.3	200	2000	100	3.333333	50	4.52E-16								
88	189-64-0	Dibenzo(a,h)pyrene	9.95E-06	3.3	200	2000	100	3.333333	50	4.52E-16								
89	191-24-2	Benzo(g,h,i)perylene	3.67E-04	3.3	200	2000	100	3.333333	50	1.67E-14								
90	191-30-0	Benzo(a,l)pyrene	9.95E-06	3.3	200	2000	100	3.333333	50	4.52E-16								
91	192-65-4	Dibenzo(a,e)pyrene	9.95E-06	3.3	200	2000	100	3.333333	50	4.52E-16								
92	193-39-5	Indeno(1,2,3-cd)pyrene	3.67E-04	3.3	200	2000	100	3.333333	50	1.67E-14								
93	205-82-3	Benzo(j)fluoranthene	1.20E-04	3.3	200	2000	100	3.333333	50	5.47E-15								
94	205-99-2	Benzo(b)fluoranthene	3.67E-04	3.3	200	2000	100	3.333333	50	1.67E-14								
95	206-44-0	Fluoranthene	5.04E-03	3.3	200	2000	100	3.333333	50	2.29E-13								
96	207-08-9	Benzo(k)fluoranthene	3.07E-04	3.3	200	2000	100	3.333333	50	[illegible]								
97	208-96-8	Acenaphthylene	2.41E-02	1	1	1	1	3.333333	50	1.45E-04								
98	218-01-9	Chrysene	2.55E-03	3.3	200	2000	100	3.333333	50	1.16E-13								
99	2234-13-1	Octachloronaphthalene	2.41E-02	3.3	200	2000	100	3.333333	50	1.10E-12								
100	224-42-0	Dibenz(a,j)acridine	1.27E-06	3.3	200	2000	100	3.333333	50	5.79E-17								
101	226-36-8	Dibenz(a,h)acridine	1.27E-06	3.3	200	2000	100	3.333333	50	5.79E-17								
102	2385-85-5	Mirex	3.48E-02	1	1	1	1	3.333333	50	2.09E-04								
103	25551-13-7	Trimethyl benzene	7.70E-03	1	1	1	1	1000	2	3.85E-06								
104	26140-60-3	Terphenyls	1.70E-02	3.3	200	2000	100	3.333333	50	7.73E-13								
105	27154-33-2	Trichlorofluoroethane	7.71E-03	1	1	1	1	1	10	7.71E-04								
106	287-92-3	Cyclopentane	7.69E-03	1	1	1	1	10000	1	7.69E-07								
107	309-00-2	Aldrin	[illegible]	3.3	200	2000	100	3.333333	10	4.77E-14								
108	319-84-6	Hexachlorocyclohexane (Lindane) Alpha BHC	[illegible]	1	1	1	1	3.333333	50	1.01E-07								
109	319-85-7	Hexachlorocyclohexane (Lindane) Beta BHC	[illegible]	3.3	200	2000	100	3.333333	50	5.99E-17								
110	319-86-8	Delta-BHC	[illegible]	3.3	200	2000	100	3.333333	50	5.87E-17								
111	3697-24-3	5-Methylchrysene	[illegible]	3.3	200	2000	100	3.333333	50	[illegible]								
112	3825-26-1	Ammonium perfluorooctanoate	2.41E-02	3.3	200	2000	100	3.333333	50	1.10E-12								
113	4170-30-3	2-Butenaldehyde (2-Butenal or Crotonaldehyde)	8.70E-04	1	1	1	1	10000	1	8.70E-08								
114	465-73-6	Isodrin	1.12E-03	1	1	1	1	3.333333	50	6.74E-06								
115	50-00-0	Formaldehyde	7.87E-03	1	1	1	1	10000	1	7.87E-07								
116	50-29-3	4,4-DDT	3.38E-05	3.3	200	2000	100	3.333333	50	1.53E-15								
117	50-32-8	Benzo(a)pyrene	[illegible]	3.3	200	2000	100	3.333333	50	2.12E-16								
118	53-70-3	Dibenz(a,h)anthracene	2.01E-07	3.3	200	2000	100	3.333333	50	9.12E-18								
119	540-59-0	1,2-Dichloroethylene	7.70E-03	1	1	1	1	10000	1	7.70E-07								
120	540-84-1	2,2,4-Trimethylpentane	7.71E-03	1	1	1	1	10000	1	7.71E-07								
121	541-73-1	1,3-Dichlorobenzene	7.70E-03	1	1	1	1	50	2	7.70E-05								
122	56-23-5	Carbon tetrachloride	7.73E-03	1	1	1	1	1	5	1.55E-03								
123	563-80-4	3-Methyl-2-butanone	5.31E-03	1	1	1	1	10000	1	5.31E-07								
124	56-49-5	3-Methylcholanthrene	[illegible]	3.3	200	2000	100	3.333333	50	1.59E-12								
125	56-55-3	Benzo(a)anthracene	5.04E-03	3.3	200	2000	100	3.333333	50	2.29E-13								
126	57-14-7	1,1-Dimethylhydrazine	4.90E-03	1	1	1	1	10000	1	4.90E-07								
127	58-89-9	gamma-BHC (Lindane)	6.74E-06	3.3	200	2000	100	3.333333	50	3.07E-16								
128	58-90-2	2,3,4,6-Tetrachlorophenol	[illegible]	1	1	1	1	3.333333	[illegible]	1.09E-04								
129	591-78-6	2-Hexanone	5.31E-03	1	1	1	1	1000	1	5.31E-06								
130	59-50-7	4-Chloro-3-methylphenol	[illegible]	3.3	200	2000	100	3.333333	20	[illegible]								
131	59-89-2	N-Nitrosomorpholine	[illegible]	3.3	200	2000	100	10000	2	8.13E-18								
132	602-87-9	5-Nitroacenaphthene	9.48E-04	3.3	200	2000	100	3.333333	50	4.31E-14								
133	60-29-7	Ethyl ether	3.48E-02	1	1	1	1	10000	1	3.48E-06								
134	603-34-9	Triphenylamine	2.37E-03	1	1	1	1	3.333333	50	1.42E-05								
135	60-34-4	Methylhydrazine	5.11E-04	1	1	1	1	10000	1	5.11E-08								
136	60-35-5	Acetamide	2.19E-04	1	1	1	1	10000	2	1.09E-08								
137	60-57-1	Dieldrin	3.18E-05	3.3	200	2000	100	3.333333	60	1.44E-15								
138	621-64-7	Di-n-Propylnitrosamine (N-Nitroso-di-n-propylamine)	2.32E-03	1	1	1	1	10000	2	1.16E-07								
139	624-83-9	Methyl isocyanate	7.66E-03	1	1	1	1	1000	1	7.66E-06								
140	627-13-4	Nitric acid, propyl ester	3.48E-02	1	1	1	1	10000	1	3.48E-06								
141	62-75-9	N-Nitroso-N,N-dimethylamine (Dimethylnitrosamine)	1.77E-03	1	1	1	1	10000	2	8.85E-08								
142	630-20-6	1,1,1,2-Tetrachloroethane	7.66E-03	1	1	1	1	1	10	7.66E-04								
143	64-17-5	Ethyl alcohol	5.11E-04	1	1	1	1	10000	1	5.11E-08								
144	64-18-6	Formic acid	1.20E-04	1	1	1	1	10000	1	1.20E-08								
145	64-19-7	Acetic acid	2.15E-05	1	1	1	1	10000	1	2.15E-09								
146	67-56-1	Methyl alcohol (Methanol)	5.11E-04	1	1	1	1	10000	1	5.11E-08								
147	67-63-0	2-Propyl alcohol (Isopropanol, Propan-2-ol)	8.63E-04	1	1	1	1	10000	1	8.63E-08								
148	67-64-1	2-Propanone (Acetone)	1.66E-02	1	1	1	1	10000	1	1.66E-06								
149	67-66-3	Chloroform	7.70E-03	1	1	1	1	1	5	1.55E-03								
150	67-72-1	Hexachloroethane	3.50E-02	1	1	1	1	1	50	7.00E-04								
151	684-16-2	Hexafluoroacetone	7.70E-03	1	1	1	1	1	[illegible]	7.70E-03								
152	71-23-8	n-Propyl alcohol	8.63E-04	1	1	1	1	10000	1	8.63E-08								
153	71-36-3	n-Butyl alcohol	8.63E-04	1	1	1	1	10000	1	8.63E-08								
154	71-43-2	Benzene	7.66E-03	1	1	1	1	100	1	7.66E-05								
155	71-55-6	Methyl chloroform (1,1,1-Trichloroethane)	7.73E-03	1	1	1	1	1000	1	7.73E-06								
156	72-20-8	Endrin	1.68E-05	3.3	200	2000	100	3.333333	50	7.62E-16								
157	72-43-5	Methoxychlor	4.01E-06	3.3	200	2000	100	3.333333	50	1.82E-16								
158	72-54-8	4,4-DDD	1.68E-05	3.3	200	2000	100	3.333333	50	7.62E-16								
159	72-55-9	4,4-DDE	[illegible]	3.3	200	2000	100	3.333333	50	[illegible]								
160	74-83-9	Bromomethane (Methyl bromide)	7.70E-03	1	1	1	1	1000	1	7.70E-06								
161	74-87-3	Chloromethane (Methyl chloride)	7.70E-03	1	1	1	1	20	1	3.85E-04								
162	74-97-5	Bromochloromethane	[illegible]	1	1	1	1	1	2	3.63E-03								
163	74-99-7	Methylacetylene	3.50E-03	1	1	1	1	10000	1	3.50E-07								
164	75-00-3	Chloroethane	7.69E-03	1	1	1	1	1000	1	7.69E-06								
165	75-01-4	Vinyl chloride (1-Chloroethene)	[illegible]	1	1	1	1	10000	1	[illegible]								
166	75-05-8	Acetonitrile	3.60E-03	1	1	1	1	1000	1	3.60E-06								
167	75-07-0	Acetaldehyde	1.39E-02	1	1	1	1	10000	1	1.39E-06								
168	75-09-2	Dichloromethane (Methylene chloride)	7.70E-03	1	1	1	1	20	1	3.85E-04								

BY: B. Bartos
DATE: 05/21/03

PROJECT: WTP
JOB NO.: 24590
CALC NO.: 24590-WTP-M4C-FRP-00005
SHEET REV: A
SHEET NO.: 82

	A	B	C	D	E	F	G	H	I	J
1	Table 6-3 PVP12 - Abated Pretreatment Vessel Vent System			NaOH						
2			PVP01	Scrubber	HEME	HEPA 1	HEPA 2	TCO	Carbon Bed	PVP12
3	CAS #	COPC	g/sec	DF	DF	DF	DF	DF	DF	g/sec
169	75-12-7	Formamide	1.27E-08	1	1	1	1	10000	1	1.27E-10
170	75-15-0	Carbon disulfide	7.68E-03	1	1	1	1	10000	1	7.68E-07
171	75-21-8	Ethylene oxide (Oxirane)	6.54E-03	1	1	1	1	10000	1	6.54E-07
172	75-27-4	Bromodichloromethane	7.68E-03	1	1	1	1	1	5	1.37E-03
173	75-34-3	1,1-Dichloroethane	7.70E-03	1	1	1	1	10000	1	7.70E-07
174	75-35-4	1,1-Dichloroethene (Vinylidene chloride)	7.73E-03	1	1	1	1	10000	1	7.73E-07
175	75-43-4	Dichlorofluoromethane	7.69E-03	1	1	1	1	1000	1	7.69E-06
176	75-45-6	Chlorodifluoromethane	7.73E-03	1	1	1	1	50	1	1.55E-04
177	75-50-3	Trimethylamine	5.31E-03	1	1	1	1	10000	1	5.31E-07
178	75-52-5	Nitromethane	1.39E-02	1	1	1	1	10000	1	1.39E-06
179	75-55-8	2-Methylaziridine	3.92E-03	1	1	1	1	10000	1	3.92E-07
180	75-61-6	Difluorodibromomethane	7.73E-03	1	1	1	1	1	1	7.73E-03
181	75-63-8	Trifluorobromomethane	7.68E-03	1	1	1	1	1	1	7.68E-03
182	75-65-0	2-Methyl-2-propanol	8.63E-04	1	1	1	1	10000	1	8.63E-08
183	75-69-4	Trichlorofluoromethane	7.71E-03	1	1	1	1	1	1	7.71E-03
184	75-71-8	Dichlorodifluoromethane	7.68E-03	1	1	1	1	1	1	7.68E-03
185	75-99-0	2,2-Dichloropropionic acid	2.15E-05	1	1	1	1	100	2	1.07E-07
186	76-03-9	Trichloroacetic acid	2.19E-06	1	1	1	1	1	50	4.38E-06
187	76-11-9	1,1,1,2-Tetrachloro-2,2-difluoroethane	3.50E-02	1	1	1	1	10	5	6.99E-04
188	76-12-0	1,1,2,2-Tetrachloro-1,2-difluoroethane	3.50E-02	1	1	1	1	10	5	7.01E-04
189	76-13-1	1,2,2-Trichloro-1,1,2-trifluoroethane (Freon 113)	7.68E-03	1	1	1	1	20	2	1.92E-04
190	76-14-2	1,2-Dichloro-1,1,2,2-tetrafluoroethane	7.71E-03	1	1	1	1	1	1	7.71E-03
191	76-15-3	Chloropentafluoroethane	7.70E-03	1	1	1	1	1	1	7.70E-03
192	76-44-8	Heptachlor	6.72E-04	1	1	1	1	3.333333	10	2.02E-05
193	78-83-1	2-Methylpropyl alcohol (isobutyl alcohol)	3.92E-03	1	1	1	1	10000	1	3.92E-07
194	78-87-5	1,2-Dichloropropane	7.70E-03	1	1	1	1	1000	1	7.70E-06
195	78-92-2	1-Methylpropyl alcohol (2-Butanol)	8.63E-04	1	1	1	1	10000	1	8.63E-08
196	78-93-3	Methyl ethyl ketone (MEK, 2-Butanone)	3.05E-03	1	1	1	1	1000	1	3.05E-06
197	79-00-5	1,1,2-Trichloroethane	7.68E-03	1	1	1	1	10000	1	7.68E-07
198	79-01-6	Trichloroethylene	7.68E-03	1	1	1	1	10000	1	7.68E-07
199	79-09-4	Propionic acid	3.49E-04	1	1	1	1	10000	1	3.49E-08
200	79-10-7	2-Propenoic acid	3.49E-04	1	1	1	1	10000	1	3.49E-08
201	79-20-9	Methyl acetate	2.41E-02	1	1	1	1	10000	1	2.41E-06
202	79-34-5	1,1,2,2-Tetrachloroethane	7.19E-03	1	1	1	1	1	10	7.19E-04
203	8001-35-2	Toxaphene	3.34E-05	3.3	200	2000	100	3.333333	50	1.04E-15
204	82-68-8	Pentachloronitrobenzene (PCBN or quintobenzene)	1.39E-02	1	1	1	1	3.333333	50	8.32E-05
205	83-32-9	Acenaphthene	2.97E-02	1	1	1	1	3.333333	50	1.78E-04
206	84-66-2	Diethyl phthalate	3.07E-04	1	1	1	1	10000	5	7.34E-09
207	84-74-2	Dibutyl phthalate	1.07E-03	3.3	200	2000	100	10000	5	1.63E-16
208	85-01-8	Phenanthrene	1.39E-02	1	1	1	1	3.333333	50	8.32E-05
209	85-68-7	Butylbenzyl phthalate	1.07E-03	3.3	200	2000	100	10000	5	1.63E-16
210	86-73-7	Fluorene	2.41E-02	3.3	200	2000	100	3.333333	50	1.10E-13
211	87-68-3	Hexachlorobutadiene	7.70E-03	1	1	1	1	50	5	3.08E-05
212	87-86-5	Pentachlorophenol	2.15E-05	1	1	1	1	3.333333	50	1.29E-07
213	88-06-2	2,4,6-Trichlorophenol	2.32E-03	1	1	1	1	3.333333	50	1.39E-05
214	88-72-2	2-Nitrotoluene	1.68E-03	1	1	1	1	10000	2	5.38E-08
215	88-75-5	2-Nitrophenol	4.89E-03	1	1	1	1	3.333333	20	7.35E-05
216	88-85-7	2-sec-Butyl-4,6-dinitrophenol (Dinoseb)	4.08E-04	3.3	200	2000	100	3.333333	50	1.86E-14
217	88-89-1	Picric acid	6.84E-08	3.3	200	2000	100	10000	5	1.84E-20
218	91-20-3	Naphthalene	1.10E-03	1	1	1	1	100	2	5.48E-06
219	91-22-5	Quinoline	9.48E-04	1	1	1	1	10000	2	4.74E-08
220	91-58-7	2-Chloronaphthalene	3.27E-02	1	1	1	1	3.333333	50	1.96E-04
221	92-52-4	1,1'-Biphenyl	3.27E-02	1	1	1	1	1000	5	6.53E-06
222	92-93-3	4-Nitrobiphenyl	3.32E-03	3.3	200	2000	100	3.333333	50	1.06E-13
223	93-72-1	Silvex (2,4,5-TP)	9.95E-06	3.3	200	2000	100	3.333333	50	4.52E-16
224	93-76-5	2,4,5-T	9.95E-06	3.3	200	2000	100	3.333333	50	4.52E-16
225	94-75-7	2,4-D and esters (160C typed)	2.15E-05	1	1	1	1	3.333333	50	1.29E-07
226	95-13-6	Indene	3.57E-02	1	1	1	1	1000	2	1.79E-05
227	95-47-6	o-Xylene	7.70E-03	1	1	1	1	10000	1	7.70E-07
228	95-48-7	o-Cresol (2-Methylphenol)	2.09E-04	1	1	1	1	1000	2	1.04E-07
229	95-49-8	2-Chlorotoluene	3.50E-02	1	1	1	1	10000	2	1.75E-06
230	95-50-1	o-Dichlorobenzene (1,2-Dichlorobenzene)	7.68E-03	1	1	1	1	50	2	7.68E-05
231	95-57-8	2-Chlorophenol	3.92E-03	1	1	1	1	10000	2	1.96E-07
232	95-95-4	2,4,5-Trichlorophenol	9.48E-04	1	1	1	1	3.333333	50	5.69E-06
233	96-22-0	3-Pentanone	5.31E-03	1	1	1	1	10000	1	5.31E-07
234	96-69-5	Bis(3-tert-butyl-4-hydroxy-5-methyl-phenyl)sulfide	3.50E-02	3.3	200	2000	100	3.333333	50	1.53E-12
235	98-51-1	p-tert-butyltoluene	3.51E-02	1	1	1	1	10000	2	1.75E-06
236	98-82-8	Cumene	3.50E-02	1	1	1	1	10000	2	1.75E-06
237	98-83-9	alpha-Methylstyrene	7.74E-03	1	1	1	1	100	2	3.87E-05
238	98-86-2	Acetophenone	4.18E-03	1	1	1	1	100	2	3.09E-05
239	98-95-3	Nitrobenzene	4.90E-03	1	1	1	1	10000	2	2.45E-07
240										7.70E-02

BY: J. Berto
DATE: 05/23/03

PROJECT: WTP
JOB NO: 24590
CALC NO: 24590-WTP-MAC-CEP-00003
SHEET: 100 A
SHEET NO: 48

	A	B	C	D	E	F	G	H	I	J	K	L	M	N	O	P	Q	R	S	T	U	V	W
1	Table 8-4 P,N54 - Unabated Pretreatment FUGITIVE										Calculated												
2			Fixed Rate					RVOC use	Performance	Adjusted	RVOC												
3	EAS #	Comp	RVOC	In-CM	Group	Grouping	Phase	Factor	Factor	RVOC	Emis		Adjusted	Performance	Factors								
4	120-08-0	p-Isopropylbenzene	3.49E-02	No			vapor			2.69E-06	1.47E-06		Group	RF									
5	100-21-0	p-Phthalic acid	3.49E-02	Yes	1	1	vapor	2.50E-06	8.21E-05		3.90E-06		1	8.21E-05			Quench PCDs		P,V,N				
6	120-35-4	1,4-Dichlorobenzene	3.49E-02	No		6	particle			8.10E-06	2.82E-06		2	2.90E-05					solids				
7	330-41-9	Ethylbenzene	3.49E-02	No		20	vapor			1.57E-05	7.90E-06		3	9.52E-05			1,1,1,2,2,3,3,4,4,5-Perfluorohexylphenyl (PFC 118)		9.58E-05				
8	330-43-2	Fluorene	3.49E-02	No		10	vapor			1.68E-05	7.90E-06		4	8.29E-05			1,1,1,2,2,3,3,4,4,5-Perfluorohexylphenyl (TUB)		9.58E-05		Correction for Quench PCDs		
9	91087-15-6	[illegible] 1,3-Dichlorobenzene	3.49E-02	Yes	15	15	vapor	8.00E-05	1.00E-05		6.94E-05		5	6.25E-05			1,1,1,2,2,3,3,4,4,5-Perfluorohexylphenyl (PFC 105)		9.58E-05		0.05 as propane		
10	91087-15-6	[illegible] 1,3-Dichlorobenzene	3.49E-02	No		10	vapor			2.69E-06	8.39E-07		6	9.13E-05			3,3,4,4,5,5,6,6,7,7,8,8,8-Tridecafluorooctylphenyl		9.58E-05		0.05 as propane acid		
11	101-55-3	4-Bromophenylphenyl ether	3.49E-02	No		10	vapor			1.68E-05	7.90E-06		7	7.92E-05			3,3,4,4,5,5,6,6,7,7,8,8,8-Tridecafluorooctylphenyl		9.58E-05				
12	101-84-8	Diphenyl ether	3.49E-02	No		35	vapor			1.26E-05	5.94E-06		8	7.61E-05			3,3,4,4,5,5,6,6,7,7,8,8,8-Tridecafluorooctylphenyl		9.58E-05				
13	106-35-4	3-Heptanone	3.49E-02	No		10	vapor			1.68E-05	7.90E-06		9	4.17E-05			3,3,4,4,5,5,6,6,7,7,8,8,8-Tridecafluorooctylphenyl		9.58E-05				
14	106-42-3	p-Xylene (Dimethylbenzene)	3.49E-02	No		18	vapor			1.68E-05	7.90E-06		10	4.08E-05			3,3,4,4,5,5,6,6,7,7,8,8,8-Tridecafluorooctylphenyl		9.58E-05				
15	106-46-7	1,4-Dichlorobenzene	3.49E-02	No		10	vapor			1.68E-05	7.90E-06		11	3.13E-05			3,3,4,4,5,5,6,6,7,7,8,8,8-Tridecafluorooctylphenyl		9.58E-05				
16	106-46-7	1,2-Dichlorobenzene	3.49E-02	No		1	vapor			1.57E-05	7.37E-07		12	3.01E-05			3,3,4,4,5,5,6,6,7,7,8,8,8-Tridecafluorooctylphenyl		9.58E-05				
17	106-93-4	Ethylene dibromide (Dibromoethane)	3.49E-02	Yes	18	18	vapor	4.10E-05	1.10E-05		1.10E-07		13	2.43E-05			3,3,4,4,5,5,6,6,7,7,8,8,8-Tridecafluorooctylphenyl		9.58E-05				
18	108-07-8	Butene	3.49E-02	Yes	35	35	vapor	7.71E-05	1.00E-05		7.71E-05		14	1.80E-05			3,3,4,4,5,5,6,6,7,7,8,8,8-Tridecafluorooctylphenyl		9.58E-05				
19	108-08-8	1,3-Butadiene	3.49E-02	Yes	23	23	vapor	7.72E-05	1.01E-05		7.72E-05		15	1.50E-05			3,3,4,4,5,5,6,6,7,7,8,8,8-Tridecafluorooctylphenyl		9.58E-05				
20	107-02-8	Acrolein	3.49E-02	No		10	vapor			1.68E-05	7.90E-06		16	1.00E-05			3,3,4,4,5,5,6,6,7,7,8,8,8-Tridecafluorooctylphenyl		9.58E-05				
21	107-05-1	3-Chloropropene (Allyl chloride)	3.49E-02	No		20	vapor			1.51E-05	7.79E-06		17	1.09E-05			3,3,4,4,5,5,6,6,7,7,8,8,8-Tridecafluorooctylphenyl		9.58E-05				
22	107-06-2	1,2-Dichloroethane (Ethylene chloride)	3.49E-02	No		10	vapor			1.68E-05	8.39E-06		18	1.18E-05			3,3,4,4,5,5,6,6,7,7,8,8,8-Tridecafluorooctylphenyl		9.58E-05				
23	107-13-1	Propionitrile	3.49E-02	No		10	vapor			2.14E-05	1.06E-05		19	1.08E-05			Polychlorinated biphenyls (PCBs)		1.32E-05				
24	107-19-7	Propargyl alcohol	3.49E-02	No		10	vapor			1.68E-05	8.39E-06		20	1.01E-05			Coplanar PCBs		1.32E-05				
25	107-18-6	3-Propene 1-ol	3.49E-02	No		10	vapor			4.80E-05	1.42E-05		21	1.04E-05									
26	107-31-3	Formic acid, methyl ester	3.49E-02	No		15	vapor			1.57E-05	5.39E-07		22	1.04E-05									
27	107-44-8	Dimethylsulfate	3.49E-02	No		5	particle			6.28E-06	2.89E-06		23	1.01E-05									
28	107-87-9	2-Pentanone	3.49E-02	No		14	vapor			1.80E-05	1.42E-07		24	1.00E-05									
29	108-03-2	1-Nitropropane	3.49E-02	No		14	vapor			1.68E-05	8.39E-07		25	1.00E-05									
30	108-05-4	Vinyl acetate	3.49E-02	No		10	vapor			1.26E-05	4.42E-07		26	1.00E-05									
31	108-10-1	Methyl isobutyl ketone (Hexone)	3.49E-02	No		10	vapor			1.68E-05	1.42E-07		27	1.00E-05									
32	108-20-3	Diisopropylether	3.49E-02	No		10	vapor			1.10E-05	5.42E-06		28	1.01E-05									
33	108-38-3	m-Xylene (Dimethylbenzene)	3.49E-02	No		10	vapor			1.10E-05	5.42E-06		29	1.00E-05									
34	108-39-4	m-Cresol	3.49E-02	No		5	vapor			4.17E-05	3.23E-07		30	7.96E-05									
35	108-67-8	Mesitylene (Trimethylbenzene)	3.49E-02	Yes	35	35	vapor	7.84E-05	1.00E-05		7.84E-05		31	6.41E-05									
36	108-88-3	Toluene	3.49E-02	Yes	18	18	vapor	7.84E-05	1.00E-05		7.84E-05		32	4.97E-05									
37	108-90-7	Chlorobenzene	3.49E-02	No		20	vapor			1.51E-05	7.79E-06		33	4.55E-05									
38	108-93-8	Cyclohexanol	3.49E-02	No		10	vapor			4.20E-05	1.12E-07		34	3.99E-05									
39	108-94-1	Cyclohexanone	3.49E-02	No		11	vapor			3.13E-05	3.39E-07		35	1.11E-05									
40	109-99-9	Furane	3.49E-02	Yes	8	8	vapor	2.21E-05	5.34E-05		2.21E-06												
41	109-66-0	n-Pentane	3.49E-02	No		20	vapor			1.50E-05	7.71E-06												
42	109-99-9	Tetrahydrofuran	3.49E-02	No		13	vapor			3.42E-05	2.90E-07												
43	110-12-3	5-Methyl-2-hexanone	3.49E-02	No		15	vapor			1.52E-05	1.17E-07												
44	110-43-0	2-Heptanone	3.49E-02	No		15	vapor			1.52E-05	1.17E-07												
45	110-54-3	n-Hexane	3.49E-02	Yes	27	27	vapor	7.70E-05	1.00E-05		7.70E-06												
46	110-65-6	2-Butyne-1,4-diol	3.49E-02	No		5	vapor			5.50E-05	5.50E-07												
47	110-82-7	Cyclohexane	3.49E-02	Yes	24	24	vapor	7.70E-05	1.00E-05		7.70E-06												
48	110-83-8	Cyclohexene	3.49E-02	No		20	vapor			1.51E-05	7.79E-06												
49	110-86-1	Pyridine	3.49E-02	No		10	vapor			1.12E-05	5.80E-06												
50	111-65-9	n-Octane	3.49E-02	No		28	vapor			1.51E-05	7.79E-06												
51	111-76-2	Ethylene glycol monobutyl ether	3.49E-02	No		5	vapor			4.17E-05	1.42E-06												
52	111-84-2	n-Nonane	3.49E-02	Yes	28	28	vapor	7.71E-05	1.01E-05		7.71E-06												
53	117-81-7	Bis(2-ethylhexyl)phthalate (DEHP)	3.49E-02	No		30	particle			1.90E-05	2.79E-06												
54	117-84-0	n-Dioctyl phthalate	3.49E-02	No		30	particle			4.17E-05	1.42E-06												
55	118-74-1	Hexachlorobenzene	3.49E-02	Yes	18	18	vapor	7.92E-05	1.10E-05		7.92E-06												
56	120-12-7	Anthracene	3.49E-02	Yes	13	13	vapor	8.01E-07	2.30E-05		8.01E-07												
57	120-82-1	1,2,4-Trichlorobenzene	3.49E-02	Yes	17	17	vapor	8.33E-05	1.98E-05		8.33E-06												
58	120-83-2	2,4-Dichlorophenol	3.49E-02	No		10	vapor			4.80E-05	1.42E-06												
59	121-44-8	Triethylamine	3.49E-02	No		15	vapor			1.23E-05	1.17E-07												
60	121-69-7	Dimethylaniline	3.49E-02	No		15	vapor			3.42E-05	1.90E-07												
61	122-39-4	N,N-Diphenylaniline	3.49E-02	Yes	10	10	vapor	2.82E-07	3.87E-05		2.87E-07												
62	123-19-3	4-Heptanone	3.49E-02	No		13	vapor			2.14E-05	1.06E-07												
63	123-38-6	n-Propionaldehyde	3.49E-02	No		14	vapor			1.90E-05	1.42E-07												
64	123-91-1	1,4-Dioxane	3.49E-02	No		12	vapor			3.01E-05	2.31E-07												
65	123-73-9	Crotonaldehyde	3.49E-02	No		10	vapor			1.26E-05	4.42E-07												
66	126-73-8	Tributylphosphate	3.49E-02	Yes	7	7	vapor	2.52E-05	7.22E-05		4.08E-05												
67	126-98-7	2-Methylpropanenitrile (Methacrylonitrile)	3.49E-02	No		15	vapor			1.26E-05	5.94E-06												
68	127-18-4	Perchloroethylene (tetrachloroethylene)	3.49E-02	Yes	21	21	vapor	7.77E-05	1.11E-05		7.77E-06												
69	127-19-5	N,N-Dimethylacetamide	3.49E-02	No		5	vapor			6.28E-05	5.39E-07												
70	128-37-0	2,6-Butylated-4-methylphenol	3.49E-02	No		30	vapor			4.07E-05	1.42E-06												
71	75-05-8	Acetonitrile	3.49E-02	Yes	30	30	particle	1.41E-05	4.94E-05		1.41E-06												
72	131-64-6	Tetrachloronaphthalene	3.49E-02	No		14	particle			1.90E-05	6.48E-07												
73	131-65-9	Trichloronaphthalene	3.49E-02	No		15	vapor			1.51E-05	5.30E-07												
74	131-66-8	Dipentylphthalate	3.49E-02	Yes	15	15	vapor	5.32E-07	1.62E-05		5.32E-07												
75	1335-87-1	Hexachloronaphthalene	3.49E-02	No		14	particle			1.90E-05	6.48E-07												
76	1335-88-2	Tetrachloronaphthalene	3.49E-02	No		15	particle			1.51E-05	5.30E-07												
77	1336-36-3	Polychlorinated biphenyls (PCBs)	3.49E-02	Yes	35	35	particle	1.34E-05	1.11E-04		1.32E-05												
78	141-78-6	Acetic acid ethyl ester (Ethyl acetate)	3.49E-02	No		14	vapor			1.68E-05	8.47E-07												
79	141-79-7	4-Methyl-3-penten-2-one	3.49E-02	No		13	vapor			2.41E-05	8.47E-07												
80	142-82-5	n-Heptane	3.49E-02	No		27	vapor			1.50E-05	7.70E-06												
81	144-62-7	Oxalic acid	3.49E-02	Yes	3	3	vapor	2.90E-07	8.32E-05		2.90E-07												
82	156-60-5	trans-1,2-Dichloroethylene	3.49E-02	No		20	vapor			1.51E-05	7.79E-06												
83	1582-09-8	Trifluralin	3.49E-02	No		14	particle			1.90E-05	6.48E-07												
84	1634-04-4	Methyl tert-butyl ether	3.49E-02	No		15	vapor			1.26E-05	5.94E-06												
85	1836-75-5	Nitrobenzene	3.49E-02	No		20	particle			1.90E-05	2.79E-06												
86	189-55-9	Dibenzo(a,i)pyrene	3.49E-02	No		5	particle			6.28E-06	2.89E-06												
87	189-64-0	Dibenzo(a,h)pyrene	3.49E-02	No		5	particle			6.28E-06	2.89E-06												
88	191-24-2	Benzo(g,h,i)perylene	3.49E-02	No		20	particle			1.90E-05	2.79E-06												
89	192-65-4	Dibenzo(k,m)pyrene	3.49E-02	No		5	particle			6.28E-06	2.89E-06												
90	193-39-5	Indeno(1,2,3-cd)pyrene	3.49E-02	No		20	particle			1.90E-05	2.79E-06												
91	205-82-3	Benzo(j,k)fluoranthene	3.49E-02	No		7	particle			1.23E-05	2.52E-06												
92	205-99-2	Benzo(b)fluoranthene	3.49E-02	No		20	particle			1.90E-05	2.79E-06												
93	206-44-0	Fluoranthene	3.49E-02	No		30	particle			4.16E-05	1.42E-06												
94	207-08-9	Benzo(k)fluoranthene	3.49E-02	No		20	particle			1.90E-05	2.79E-06												
95	208-96-8	Acenaphthylene	3.49E-02	No	14	14	particle	6.68E-07	1.98E-05		6.68E-07												
96	218-01-9	Chrysene	3.49E-02	Yes	32	32	particle	1.51E-05	4.53E-05		1.51E-06												
97	2234-13-1	Octachlorinaphthalene	3.49E-02	No		14	particle			1.90E-05	6.48E-07												
98	24-12-2	Dibenzo(a,l)pyrene	3.49E-02	No		5	particle			6.28E-06	2.89E-06												
99	224-42-0	Dibenzo(a,e)pyrene	3.49E-02	No		5	particle			6.28E-06	2.89E-06												
100	2385-85-5	Mirex	3.49E-02	No		20	vapor			1.51E-05	2.79E-07												
101	25551-13-7	Trimethylbenzene	3.49E-02	No		18	vapor			1.23E-05	7.92E-06												
102	90-90-0-3	Terphenyls	3.49E-02	No		30	particle			1.90E-05	2.79E-06												
103	2716-33-2	Trichlorofluoromethane	3.49E-02	No		23	vapor			1.61E-05	7.71E-06												
104	26-40-2	Octadecanoic acid	3.49E-02	No		24	vapor			1.50E-05	7.70E-06												
105	29-00-8	HMX	4.30E-04	Yes	34	34	particle	1.72E-05	3.98E-05		1.72E-06												
106	319-84-6	Hexachlorocyclohexane (Lindane) Alpha BHC	1.90E-04	Yes		30	vapor			4.16E-05	4.83E-06												
107	319-85-7	Hexachlorocyclohexane (Lindane) Beta BHC	1.90E-04	Yes	30	30	particle	8.20E-05	8.37E-05		8.20E-06												
108	319-86-8	Delta-BHC	1.90E-04	Yes		30	particle			7.96E-05	8.28E-06												
109	3697-24-3	5-Methylchrysene	3.49E-02	No		32	particle			4.17E-05	1.42E-06												
110	4835-26-1	Ammonium perfluorooctanoate	3.49E-02	No		14	particle			1.90E-05	6.48E-07												
111	6159-30-3	2-Sulfanilamide (2-Aniline or Orthoaniline)	7.67E-03	Yes	11	11	vapor	2.20E-07	2.87E-05		2.20E-07												
112	465-73-6	Isodrin	2.30E-04	Yes		35	vapor			1.11E-04	2.11E-06												
113	50-00-0	Formaldehyde	7.67E-03	No		8	vapor			7.21E-05	3.30E-07												
114	50-29-3	4,4-DDT	2.30E-04	Yes		30	particle			4.16E-05	5.67E-06												
115	50-32-8	Benzo(a)pyrene	4.60E-04	Yes	30	30	particle	3.47E-05	7.85E-05		3.47E-06												
116	50-78-2	Acetylsalicylic acid (Aspirin)	5.17E-06	No		7	particle			7.23E-05	1.10E-06												
117	540-59-0	1,2-Dichloroethylene	3.49E-02	No		18	vapor			1.68E-05	8.39E-06												
118	540-84-1	2,2,4-Trimethylpentane	7.67E-03	No		20	vapor			1.51E-05	7.79E-06												
119	541-73-1	1,3-Dichlorobenzene	7.67E-03	No		18	vapor			1.30E-05	7.92E-06												
120	56-23-5	Carbon tetrachloride	7.67E-03	Yes	27	27	vapor	7.79E-05	1.01E-05		7.79E-06												
121	563-80-4	3-Methyl-2-butanone	7.67E-03	No		20	vapor			4.80E-05	1.42E-07												
122	56-55-3	3-Methylcholanthrene	3.49E-02	No		20	particle			1.51E-05	3.31E-07												
123	56-72-4	Dimethoxybenzene	3.49E-02	No		20	particle			4.16E-05	1.00E-06												
124	57-14-7	1,1-Dimethylhydrazine	3.49E-02	Yes	12	12	vapor	1.34E-06	3.11E-05		1.34E-06												
125	58-89-9	gamma-BHC (Lindane)	1.90E-04	Yes	32	32	particle	8.20E-05	4.00E-05		8.20E-06												
126	59-50-7	2,3,4,6-Tetrachlorophenol	3.49E-02	Yes	11	11	vapor	5.19E-05	3.15E-05		5.19E-06												
127	591-78-6	2-Hexanone	7.67E-03	No		14	vapor			1.90E-05	1.42E-07												
128	59-50-7	p-Chloro-m-cresol	3.49E-02	No		30	particle			4.17E-05	1.42E-06												
129	59-89-2	N-Nitrosomorpholine	3.49E-02	No		6	particle			3.14E-05	1.42E-06												
130	60-51-5	Dimethoxybenzidine	3.49E-02	No		9	particle			4.17E-05	1.42E-06												
131	60-29-7	Ethyl ether	3.49E-02	No		17	vapor			1.68E-05	7.90E-07												
132	60-34-4	Methylhydrazine	3.49E-02	Yes	32	32	vapor	1.12E-05	3.37E-05		1.12E-06												
133	60-57-1	Dieldrin	1.90E-04	No		10	vapor			4.16E-05	1.12E-06												
134	60-30-5	Naphthalene	7.67E-03	Yes	9	9	vapor	8.51E-07	4.20E-05		8.51E-07												
135	60-57-1	Dieldrin	2.30E-04	Yes	34	34	particle	9.83E-05	4.28E-05		9.83E-06												
136	62-44-2	Bis-Phenylhydrazine (N-Nitroso-diphenylamine)	3.49E-02	No		10	vapor			4.80E-05	1.42E-06												
137	634-93-5	Methylacetanilide	7.67E-03	No		12	vapor			1.50E-05	6.31E-06												
138	62-75-9	Nitrosodimethylamine	3.49E-02	Yes		17	vapor			1.68E-05	7.90E-07												
139	630-20-6	1,1,1,2-Tetrachloroethane	7.67E-03	No		18	vapor			1.10E-05	5.42E-06												
140	64-17-5	Ethyl alcohol	7.67E-03	No		10	vapor			4.08E-05	3.13E-07												
141	64-18-6	Formic acid	3.49E-02	No		5	vapor			6.28E-05	3.39E-06												
142	64-19-7	Acetic acid	3.49E-02	No		5	vapor			6.28E-05	2.89E-06												
143	67-56-1	Methyl alcohol (Methanol)	7.67E-03	No		10	vapor			4.08E-05	3.13E-07												
144	67-63-0	2-Propyl alcohol (Isopropanol, Propan-2-ol)	7.67E-03	No		11	vapor			3.13E-05	2.46E-07												
145	67-64-1	2-Propanone (Acetone)	4.60E-03	No		11	vapor			2.41E-05	1.42E-06												
146	67-66-3	Chloroform	7.67E-03	No		10	vapor			1.23E-05	7.92E-06												
147	67-72-1	Hexachloroethane	3.49E-02	No		10	vapor			1.23E-05	3.60E-07												
148	67-72-1	Hexafluoroethane	7.67E-03	No		10	vapor			1.23E-05	7.92E-06												
149	71-23-8	n-Propyl alcohol	7.67E-03	No		11	vapor			3.13E-05	2.46E-07												
150	71-36-3	n-Butyl alcohol	7.67E-03	No		11	vapor			3.13E-05	2.46E-07												
151	71-43-2	Benzene	7.67E-03	Yes	19	19	vapor	2.54E-05	1.02E-05		2.54E-06												
152	71-55-6	Methylchloroform (1,1,1-Trichloroethane)	7.67E-03	No		21	vapor			1.51E-05	7.79E-06												
153	72-20-8	Endrin	2.30E-04	No		30	particle			4.07E-05	8.42E-06												
154	72-43-5	Methoxychlor	2.30E-04	No		30	particle			4.07E-05	8.42E-06												
155	72-54-8	4,4-DDD	2.30E-04	No		32	particle			4.07E-05	8.42E-06												
156	72-55-9	4,4-DDE	2.30E-04	No		34	particle			3.99E-05	8.28E-06												
157	74-87-3	Chloromethane (Methyl chloride)	7.67E-03	No		18	vapor			1.03E-05	7.92E-06												
158	74-83-9	Bromomethane (Methyl bromide)	7.67E-03	No		18	vapor			6.51E-06	7.79E-06												
159	74-87-3	Chloromethane (Methyl chloride)	7.67E-03	No		17	vapor			1.68E-05	8.39E-06												
160	74-95-3	Methylene chloride	3.49E-02	No		20	vapor			1.51E-05	3.54E-07												
161	75-00-3	Chloroethane	7.67E-03	No		20	vapor			1.51E-05	7.79E-06												
162	75-01-4	Vinyl chloride (Chloroethene)	3.49E-02	No		22	vapor			1.51E-05	3.39E-07												
163	75-05-8	Acetonitrile	1.20E-02	Yes	13	13	vapor	2.50E-07	2.30E-05		2.50E-07												
164	75-07-0	Acetaldehyde	3.49E-02	No		13	vapor			2.41E-05	8.47E-07												
165	75-09-2	Dichloromethane (Methylene chloride)	7.67E-03	No		19	vapor			1.03E-05	7.92E-06												
166	75-15-0	Carbon disulfide	3.49E-02	Yes	4	4	vapor	2.84E-05	9.25E-05		2.84E-06												
167	75-15-0	Carbon disulfide	7.67E-03	No		22	vapor			1.01E-05	7.79E-06												
168	75-21-8	Ethylene oxide (Oxirane)	7.67E-03	No		13	vapor			1.32E-05	1.17E-07												
169	75-27-4	Bromodichloromethane	7.67E-03	No		18	vapor			1.10E-05	8.42E-06												
170	75-34-3	1,1-Dichloroethane	7.67E-03	No		19	vapor			1.03E-05	7.92E-06												
171	75-35-4	1,1-Dichloroethylene (Vinylidene chloride)	7.67E-03	No		20	vapor			1.01E-05	7.79E-06												
172	75-43-4	Dichlorofluoromethane	7.67E-03	No		20	vapor			1.01E-05	7.79E-06												
173	75-45-6	Chlorodifluoromethane	7.67E-03	No		22	vapor			1.01E-05	7.79E-06												
174	75-50-3	Trimethylamine	7.67E-03	No		14	vapor			1.46E-05	1.42E-07												
175	75-52-5	Nitromethane	7.67E-03	No		13	vapor			1.32E-05	8.47E-07												
176	75-65-0	t-Butylalcohol	3.49E-02	No		11	vapor			3.13E-05	1.08E-06												
177	75-69-4	Trichlorofluoromethane	7.67E-03	No		22	vapor			1.01E-05	7.79E-06												
178	75-71-8	Dichlorodifluoromethane	7.67E-03	No		22	vapor			1.01E-05	7.79E-06												
179	75-74-1	Tetramethylsilane	7.67E-03	No		22	vapor			1.01E-05	7.79E-06												
180	75-75-2	Methanesulfonic acid	3.49E-02	No		5	vapor			6.28E-05	3.39E-07												
181	75-81-0	1,1,1,2-Tetrachloro-2,2-difluoroethane	3.49E-

	A	B	C	D	E	F	G	H	I	J	K	L	M	N	O	P	Q	R	S	T	U	V	W
1	Table B-4 PJV04 - Unabated Pretreatment [illegible]FD										Calculation												
2			Feed Rate					PJV04 rate	Performance	Adjusted	PJV04												
3	CAS #	COPC	g/sec	In ACM	Group	Grouping	Phase	g/sec	Factor	PF	g/sec		Adjusted Performance Factors										
203	8001-35-2	Toxaphene	2.67E-04	Yes	10	10	particle	1.20E-06	4.49E-05		1.20E-06												
204	62-68-8	Pentachlorobiphenyls (PCBs) or quinoline	3.48E-02	No		15	vapor			2.49E-05	8.47E-07												
205	83-32-9	Acenaphthene	3.48E-02	No		15	vapor			1.92E-05	5.30E-07												
206	84-66-2	Diethyl phthalate	3.48E-02	Yes	8	8	vapor	1.83E-06	5.51E-05		1.92E-06												
207	84-74-2	Dibutyl phthalate	3.48E-02	Yes	31	31	particle	1.83E-06	5.41E-05		1.89E-06												
208	85-01-8	Phenanthrene	3.48E-02	No		15	vapor			2.49E-05	8.47E-07												
209	85-68-7	Butylbenzyl phthalate	3.48E-02	No		31	particle			5.41E-05	1.89E-06												
210	86-73-7	Fluorene	3.48E-02	No		14	particle			1.86E-05	6.49E-07												
211	87-68-3	Hexachlorobutadiene	7.67E-03	Yes	20	20	vapor	7.79E-06	1.02E-05		7.79E-06												
212	87-86-5	Pentachlorophenol	3.48E-02	Yes	6	6	vapor	2.82E-06	8.10E-05		2.82E-06												
213	88-06-2	2,4,6-Trichlorophenol	3.48E-02	No		10	vapor			4.08E-05	1.42E-06												
214	88-72-2	2-Nitrotoluene	7.67E-03	No		12	vapor			3.01E-05	2.31E-07												
215	88-75-5	2-Nitrophenol	3.48E-02	No		12	vapor			3.01E-05	1.05E-06												
216	88-85-7	2-sec-Butyl-4,6-dinitrophenol (Dinoseb)	3.48E-02	Yes	8	8	particle	3.20E-06	9.19E-05		3.20E-06												
217	88-89-1	Picric acid	3.48E-02	Yes	2	2	particle	1.03E-05	2.96E-04		1.03E-05												
218	91-20-3	Naphthalene	1.18E-03	Yes	16	16	vapor	1.45E-06	1.23E-05		1.45E-06												
219	91-22-5	Quinoline	3.48E-02	No		9	vapor			4.17E-05	1.45E-06												
220	91-58-7	2-Chloronaphthalene	3.48E-02	No		16	vapor			1.06E-05	4.42E-07												
221	92-52-4	1,1'-Biphenyl	3.48E-02	No		16	vapor			1.06E-05	4.42E-07												
222	92-93-3	4-Nitrophenol	3.48E-02	No		10	particle			4.08E-05	1.42E-06												
223	93-72-1	Silvex (2,4,5-TP)	3.48E-02	No		6	particle			9.23E-05	2.68E-06												
224	93-76-5	2,4,5-T	3.48E-02	No		5	particle			9.84E-05	2.86E-06												
225	94-75-7	2,4-D and esters (HERC type)	3.48E-02	No		6	vapor			8.43E-05	2.82E-06												
226	95-13-6	Indene	3.48E-02	No		18	vapor			1.10E-05	3.83E-07												
227	95-47-6	o-Xylene	7.67E-03	No		19	vapor			1.08E-05	1.92E-08												
228	95-48-7	o-Cresol (2-Methylphenol)	7.67E-03	No		9	vapor			4.17E-05	3.29E-07												
229	95-49-8	2-Chlorotoluene	3.48E-02	No		19	vapor			1.08E-05	3.83E-07												
230	95-50-1	o-Dichlorobenzene (1,2-Dichlorobenzene)	7.67E-03	No		19	vapor			1.08E-05	8.43E-08												
231	95-57-8	2-Chlorophenol	3.48E-02	No		11	vapor			3.67E-05	1.69E-06												
232	95-95-4	2,4,5-Trichlorophenol	3.48E-02	No		9	vapor			4.17E-05	1.45E-06												
233	96-22-0	3-Pentanone	7.67E-03	No		14	vapor			1.86E-05	1.43E-07												
234	96-69-5	Bis(3-tert-butyl-4-hydroxy-5-methylphenyl)sulfide	3.48E-02	No		19	particle			1.08E-05	3.83E-07												
235	98-51-1	p-tert-Butyltoluene	3.48E-02	No		21	vapor			1.01E-05	3.58E-07												
236	98-82-8	Cumene	3.48E-02	No		20	vapor			1.01E-05	3.58E-07												
237	98-83-9	alpha-Methylstyrene	7.67E-03	No		19	vapor			1.08E-05	7.92E-08												
238	98-86-2	Acetophenone	3.48E-02	Yes	11	11	vapor	1.97E-06	2.98E-05		1.97E-06												
239	98-95-3	Nitrobenzene	3.48E-02	No		12	vapor			3.01E-05	1.05E-06												
240											1.82E-04												

CALCULATION SHEET

BY: E. Berrios
DATE: 05/21/03

PROJECT: WTP
JOB NO.: 24590
CALC NO.: 24590-WTP-M4C-FRP-00005
SHEET REV: A
SHEET NO.: 85

	A	B	C	D	E	F	G	H	I	J	K	L	M	N	O
1	Table B-5 PJV11 - Abated Pretreatment PJM/RFD			PT PJM											
2			PJV04	Demister	HEPA 1	HEPA 2	PJV11								
3	CAS #	COPC	g/sec	DF	DF	DF	g/sec								
4	100-00-5	p-Nitrochlorobenzene	1.42E-06	1	1	1	1.42E-06		Coplanar PCBs		PJV11				
5	100-21-0	p-Phthalic acid	2.90E-06	1	1	1	2.90E-06				g/sec				
6	100-25-4	1,4-Dinitrobenzene	2.82E-08	5	2000	100	2.82E-12		31508-00-6	2,3',4,4',5-Pentachlorobiphenyl (PBC 118)	9.56E-16				
7	100-41-4	Ethyl benzene	7.78E-08	1	1	1	7.78E-08		32598-13-3	3,3',4,4'-Tetrachlorobiphenyl (TCB)	9.56E-16		Correction for Coplanar PCBs		
8	100-42-5	Styrene	7.92E-08	1	1	1	7.92E-08		32598-14-4	2,3,3',4,4'-Pentachlorobiphenyl (PCB 156)	9.56E-16		0.99 as parent		
9	10061-01-5	cis-1,3-Dichloropropene	8.06E-08	1	1	1	8.06E-08		32774-16-6	3,3',4,4',5,5'-Hexachlorobiphenyl	9.56E-16		0.01 as coplanar sum		
10	10061-02-6	trans-1,3-Dichloropropene	8.33E-08	1	1	1	8.33E-08		35065-29-3	2,2',3,4,4',5,5'-Heptachlorobiphenyl	9.56E-16				
11	101-55-3	4-Bromophenylphenyl ether	6.48E-07	1	1	1	6.48E-07		35065-30-6	2,2',3,3',4,4',5-Heptachlorobiphenyl	9.56E-16				
12	101-84-8	Diphenyl ether	9.69E-08	1	1	1	9.69E-08		38380-08-4	2,3,3',4,4',5-Hexachlorobiphenyl (PCB 157)	9.56E-16				
13	106-35-4	3-Heptanone	1.43E-07	1	1	1	1.43E-07		39635-31-9	2,3,3',4,4',5,5'-Heptachlorobiphenyl	9.56E-16				
14	106-42-3	p-Xylene (Dimethyl benzene)	7.92E-08	1	1	1	7.92E-08		52663-72-6	2,3',4,4',5,5'-Hexachlorobiphenyl	9.56E-16				
15	106-46-7	1,4-Dichlorobenzene	8.43E-08	1	1	1	8.43E-08		57465-28-8	3,3',4,4',5-Pentachlorobiphenyl	9.56E-16				
16	106-88-7	1,2-Epoxybutane	1.17E-07	1	1	1	1.17E-07		60510-44-3	2,3,4,4',5-Pentachlorobiphenyl	9.56E-16				
17	106-93-4	Ethylene dibromide (Dibromethane)	4.10E-07	1	1	1	4.10E-07		69782-90-7	2,3,3',4,4',5'-Hexachlorobiphenyl	9.56E-16				
18	106-97-8	Butane	7.71E-08	1	1	1	7.71E-08		70362-50-4	3,4,4',5-Tetrachlorobiphenyl	9.56E-16				
19	106-99-0	1,3-Butadiene	7.72E-08	1	1	1	7.72E-08		74472-37-0	2,3,4,4',5-Pentachlorobiphenyl	9.56E-16				
20	107-02-8	Acrolein	1.43E-07	1	1	1	1.43E-07								
21	107-05-1	3-Chloropropene (Allyl chloride)	7.78E-08	1	1	1	7.78E-08		1336-36-3	Polychlorinated biphenyls (PCBs)	1.32E-12				
22	107-06-2	1,2-Dichloroethane (Ethylene chloride)	8.33E-08	1	1	1	8.33E-08		1336-36-3	UnCorrected (for coplanar PCBs)	1.34E-12				
23	107-12-0	Propionitrile	1.86E-07	1	1	1	1.86E-07								
24	107-13-1	Acrylonitrile	1.43E-07	1	1	1	1.43E-07								
25	107-18-6	2-Propene-1-ol	1.42E-06	1	1	1	1.42E-06								
26	107-31-3	Formic acid, methyl ester	5.30E-07	1	1	1	5.30E-07								
27	107-66-4	Dibutylphosphate	2.88E-08	5	2000	100	2.88E-12								
28	107-87-9	2-Pentanone	1.43E-07	1	1	1	1.43E-07								
29	108-03-2	1-Nitropropane	6.48E-07	1	1	1	6.48E-07								
30	108-05-4	Vinyl acetate	4.40E-07	1	1	1	4.40E-07								
31	108-10-1	Hexone (4-Methyl-2-pentanone or MIBK)	1.43E-07	1	1	1	1.43E-07								
32	108-20-3	Bis(isopropyl)ether	8.43E-08	1	1	1	8.43E-08								
33	108-38-3	m-Xylene (Dimethyl benzene)	7.92E-08	1	1	1	7.92E-08								
34	108-39-4	m-Cresol	3.20E-07	1	1	1	3.20E-07								
35	108-87-2	Methylcyclohexane	7.69E-08	1	1	1	7.69E-08								
36	108-88-3	Toluene	7.84E-08	1	1	1	7.84E-08								
37	108-90-7	Chlorobenzene	7.92E-08	1	1	1	7.92E-08								
38	108-93-0	Cyclohexanol	3.13E-07	1	1	1	3.13E-07								
39	108-94-1	Cyclohexanone	2.39E-07	1	1	1	2.39E-07								
40	108-95-2	Phenol	2.21E-08	1	1	1	2.21E-08								
41	109-66-0	n-Pentane	7.71E-08	1	1	1	7.71E-08								
42	109-99-9	Tetrahydrofuran	3.95E-07	1	1	1	3.95E-07								
43	110-12-3	5-Methyl-2-hexanone	1.17E-07	1	1	1	1.17E-07								
44	110-43-0	2-Heptanone	1.17E-07	1	1	1	1.17E-07								
45	110-54-3	n-Hexane	7.70E-08	1	1	1	7.70E-08								
46	110-62-3	n-Valeraldehyde	5.30E-07	1	1	1	5.30E-07								
47	110-82-7	Cyclohexane	7.70E-08	1	1	1	7.70E-08								
48	110-83-8	Cyclohexene	7.76E-08	1	1	1	7.76E-08								
49	110-86-1	Pyridine	1.08E-06	1	1	1	1.08E-06								
50	111-65-9	n-Octane	7.71E-08	1	1	1	7.71E-08								
51	111-76-2	Ethylene glycol monobutyl ether	1.45E-08	1	1	1	1.45E-08								
52	111-84-2	n-Nonane	7.71E-08	1	1	1	7.71E-08								
53	117-81-7	Bis(2-ethylhexyl)phthalate (DEHP)	2.78E-06	5	2000	100	2.78E-12								
54	117-84-0	n-Dioctyl phthalate	1.42E-06	5	2000	100	1.42E-12								
55	118-74-1	Hexachlorobenzene	7.92E-09	1	1	1	7.92E-09								
56	120-12-7	Anthracene	8.01E-07	1	1	1	8.01E-07								
57	120-82-1	1,2,4-Trichlorobenzene	8.33E-08	1	1	1	8.33E-08								
58	120-83-2	2,4-Dichlorophenol	1.42E-06	1	1	1	1.42E-06								
59	121-44-8	Triethylamine	1.17E-07	1	1	1	1.17E-07								
60	121-69-7	Dimethylaniline	1.86E-07	1	1	1	1.86E-07								
61	122-39-4	N,N-Diphenylamine	2.82E-07	1	1	1	2.82E-07								
62	123-19-3	4-Heptanone	1.86E-07	1	1	1	1.86E-07								
63	123-38-6	n-Propionaldehyde	1.43E-07	1	1	1	1.43E-07								
64	123-51-3	3-Methyl-1-butanol	2.31E-07	1	1	1	2.31E-07								
65	123-86-4	Acetic acid n-butyl ester	4.40E-07	1	1	1	4.40E-07								
66	123-91-1	1,4-Dioxane	8.54E-07	1	1	1	8.54E-07								
67	126-73-8	Tributyl phosphate	2.52E-08	1	1	1	2.52E-08								
68	126-98-7	2-Methyl-2-propenenitrile (Methacrylonitrile)	9.69E-08	1	1	1	9.69E-08								
69	127-18-4	Perchloroethylene (tetrachloroethylene)	7.77E-08	1	1	1	7.77E-08								
70	127-19-5	N,N-Dimethylacetamide	6.33E-07	1	1	1	6.33E-07								
71	128-37-0	2,6-Bis(tert-butyl)-4-methylphenol	1.42E-06	1	1	1	1.42E-06								
72	129-00-0	Pyrene	1.41E-06	5	2000	100	1.41E-12								
73	1321-64-8	Pentachloronaphthalene	6.48E-07	5	2000	100	6.48E-13								
74	1321-65-9	Trichloronaphthalene	5.30E-07	1	1	1	5.30E-07								
75	132-64-9	Dibenzofuran	5.30E-07	1	1	1	5.30E-07								
76	1335-87-1	Hexachloronaphthalene	6.48E-07	5	2000	100	6.48E-13								
77	1335-88-2	Tetrachloronaphthalene	5.30E-07	5	2000	100	5.30E-13								
78	1336-36-3	Polychlorinated biphenyls (PCBs)	1.32E-06	5	2000	100	1.32E-12								
79	141-78-6	Acetic acid ethyl ester (Ethyl acetate)	6.48E-07	1	1	1	6.48E-07								
80	141-79-7	4-Methyl-3-penten-2-one	8.47E-07	1	1	1	8.47E-07								
81	142-82-5	n-Heptane	7.70E-08	1	1	1	7.70E-08								
82	144-62-7	Oxalic acid	2.90E-07	1	1	1	2.90E-07								
83	156-60-5	trans-1,2-Dichloroethylene	7.78E-08	1	1	1	7.78E-08								
84	1582-09-8	Trifluralin	6.48E-07	5	2000	100	6.48E-13								
85	1634-04-4	Methyl tert-butyl ether	9.69E-08	1	1	1	9.69E-08								
86	1836-75-5	Nitrofen	2.78E-06	5	2000	100	2.78E-12								
87	189-55-9	Dibenzo(a,i)pyrene	2.88E-06	5	2000	100	2.88E-12								
88	189-64-0	Dibenzo(a,h)pyrene	2.88E-06	5	2000	100	2.88E-12								
89	191-24-2	Benzo(g,h,i)perylene	2.78E-06	5	2000	100	2.78E-12								
90	191-30-0	Benzo(a,l)pyrene	2.88E-06	5	2000	100	2.88E-12								
91	192-65-4	Dibenzo(a,e)pyrene	2.88E-06	5	2000	100	2.88E-12								
92	193-39-5	Indeno(1,2,3-cd)pyrene	2.78E-06	5	2000	100	2.78E-12								
93	205-82-3	Benzo(j)fluoranthene	2.52E-06	5	2000	100	2.52E-12								
94	205-99-2	Benzo(b)fluoranthene	2.78E-06	5	2000	100	2.78E-12								
95	206-44-0	Fluoranthene	1.45E-06	5	2000	100	1.45E-12								
96	207-08-9	Benzo(k)fluoranthene	2.78E-06	5	2000	100	2.78E-12								
97	208-96-8	Acenaphthylene	6.48E-07	1	1	1	6.48E-07								
98	218-01-9	Chrysene	1.51E-06	5	2000	100	1.51E-12								
99	2234-13-1	Octachloronaphthalene	6.48E-07	5	2000	100	6.48E-13								
100	224-42-0	Dibenz(a,j)acridine	2.89E-06	5	2000	100	2.89E-12								
101	226-36-8	Dibenz(a,h)acridine	2.89E-06	5	2000	100	2.89E-12								
102	2385-85-5	Mirex	3.79E-07	1	1	1	3.79E-07								
103	25551-13-7	Trimethyl benzene	7.92E-08	1	1	1	7.92E-08								
104	26140-60-3	Terphenyls	1.39E-06	5	2000	100	1.39E-12								
105	27154-33-2	Trichlorofluoroethane	7.72E-08	1	1	1	7.72E-08								
106	287-92-3	Cyclopentane	7.70E-08	1	1	1	7.70E-08								
107	309-00-2	Aldrin	1.72E-08	5	2000	100	1.72E-14								
108	319-84-6	Hexachlorocyclohexane (Lindane) Alpha BHC	4.83E-09	1	1	1	4.83E-09								
109	319-85-7	Hexachlorocyclohexane (Lindane) Beta BHC	9.38E-09	5	2000	100	9.38E-15								
110	319-86-8	Delta-BHC	9.25E-09	5	2000	100	9.25E-15								
111	3697-24-3	5-Methylchrysene	1.42E-06	5	2000	100	1.42E-12								
112	3825-26-1	Ammonium perfluorooctanoate	6.48E-07	5	2000	100	6.48E-13								
113	4170-30-3	2-Butenaldehyde (2-Butenal or Crotonaldehyde)	2.39E-07	1	1	1	2.39E-07								
114	465-73-6	Isodrin	2.57E-08	1	1	1	2.57E-08								
115	50-00-0	Formaldehyde	5.38E-07	1	1	1	5.38E-07								
116	50-29-3	4,4-DDT	9.67E-09	5	2000	100	9.67E-15								
117	50-32-8	Benzo(a)pyrene	3.47E-06	5	2000	100	3.47E-14								
118	53-70-3	Dibenzo(a,h)anthracene	4.19E-09	5	2000	100	4.19E-15								
119	540-59-0	1,2-Dichloroethylene	7.92E-08	1	1	1	7.92E-08								
120	540-84-1	2,2,4-Trimethylpentane	7.71E-08	1	1	1	7.71E-08								
121	541-73-1	1,3-Dichlorobenzene	7.92E-08	1	1	1	7.92E-08								
122	56-23-5	Carbon tetrachloride	7.76E-08	1	1	1	7.76E-08								
123	563-80-4	3-Methyl-2-butanone	1.43E-07	1	1	1	1.43E-07								
124	56-49-5	3-Methylcholanthrene	3.51E-07	5	2000	100	3.51E-13								
125	56-55-3	Benzo(a)anthracene	1.45E-06	5	2000	100	1.45E-12								
126	57-14-7	1,1-Dimethylhydrazine	1.05E-06	1	1	1	1.05E-06								
127	58-89-9	gamma-BHC (Lindane)	5.22E-09	5	2000	100	5.22E-15								
128	58-90-2	2,3,4,6-Tetrachlorophenol	1.10E-06	1	1	1	1.10E-06								
129	591-78-6	2-Hexanone	1.43E-07	1	1	1	1.43E-07								
130	59-50-7	4-Chloro-3-methylphenol	1.42E-06	5	2000	100	1.42E-12								
131	59-89-2	N-Nitrosomorpholine	2.82E-06	1	1	1	2.82E-06								
132	602-87-9	5-Nitroacenaphthene	1.45E-06	5	2000	100	1.45E-12								
133	60-29-7	Ethyl ether	3.79E-07	1	1	1	3.79E-07								
134	603-34-9	Triphenylamine	1.18E-06	1	1	1	1.18E-06								
135	60-34-4	Methylhydrazine	3.13E-07	1	1	1	3.13E-07								
136	60-35-5	Acetamide	6.33E-07	1	1	1	6.33E-07								
137	60-57-1	Dieldrin	9.95E-09	5	2000	100	9.95E-15								
138	621-64-7	Di-n-Propylnitrosamine (N-Nitroso-di-n-propylamine)	1.42E-06	1	1	1	1.42E-06								
139	624-83-9	Methyl isocyanate	6.33E-08	1	1	1	6.33E-08								
140	627-13-4	Nitric acid, propyl ester	3.79E-07	1	1	1	3.79E-07								
141	62-75-9	N-Nitroso-N,N-dimethylamine (Dimethylnitrosamine)	2.71E-06	1	1	1	2.71E-06								
142	630-20-6	1,1,1,2-Tetrachloroethane	8.43E-08	1	1	1	8.43E-08								
143	64-17-5	Ethyl alcohol	3.13E-07	1	1	1	3.13E-07								
144	64-18-6	Formic acid	2.52E-08	1	1	1	2.52E-08								
145	64-19-7	Acetic acid	2.82E-08	1	1	1	2.82E-08								
146	67-56-1	Methyl alcohol (Methanol)	3.13E-07	1	1	1	3.13E-07								
147	67-63-0	2-Propyl alcohol (Isopropanol; Propan-2-01)	2.39E-07	1	1	1	2.39E-07								

	A	B	C	D	E	F	G
1	Table B-6 PJV11 - Abated Pretreatment PJM/RFD			PT PJM			
2			PJV04	Demister	HEPA 1	HEPA 2	PJV11
3	CAS #	COPC	g/sec	DF	DF	DF	g/sec
148	67-64-1	2-Propanone (Acetone)	1.02E-06	1	1	1	1.02E-06
149	67-66-3	Chloroform	7.92E-08	1	1	1	7.92E-08
150	67-72-1	Hexachloroethane	3.60E-07	1	1	1	3.60E-07
151	684-16-2	Hexafluoroacetone	7.92E-08	1	1	1	7.92E-08
152	71-23-8	n-Propyl alcohol	2.39E-07	1	1	1	2.39E-07
153	71-36-3	n-Butyl alcohol	2.39E-07	1	1	1	2.39E-07
154	71-43-2	Benzene	7.85E-08	1	1	1	7.85E-08
155	71-55-6	Methyl chloroform (1,1,1-Trichloroethane)	7.77E-08	1	1	1	7.77E-08
156	72-20-8	Endrin	9.45E-09	5	2000	100	9.45E-15
157	72-43-5	Methoxychlor	8.39E-08	5	2000	100	8.39E-14
158	72-54-8	4,4-DDD	9.45E-09	5	2000	100	9.45E-15
159	72-55-9	4,4-DDE	9.28E-09	5	2000	100	9.28E-15
160	74-83-9	Bromomethane (Methyl bromide)	7.92E-08	1	1	1	7.92E-08
161	74-87-3	Chloromethane (Methyl chloride)	7.78E-08	1	1	1	7.78E-08
162	74-97-5	Bromochloromethane	8.33E-08	1	1	1	8.33E-08
163	74-99-7	Methylacetylene	3.54E-07	1	1	1	3.54E-07
164	75-00-3	Chloroethane	7.78E-08	1	1	1	7.78E-08
165	75-01-4	Vinyl chloride (1-Chloroethene)	3.53E-07	1	1	1	3.53E-07
166	75-05-8	Acetonitrile	2.60E-07	1	1	1	2.60E-07
167	75-07-0	Acetaldehyde	8.47E-07	1	1	1	8.47E-07
168	75-09-2	Dichloromethane (Methylene chloride)	7.92E-08	1	1	1	7.92E-08
169	75-12-7	Formamide	2.89E-06	1	1	1	2.89E-06
170	75-15-0	Carbon disulfide	7.78E-08	1	1	1	7.78E-08
171	75-21-8	Ethylene oxide (Oxirane)	1.17E-07	1	1	1	1.17E-07
172	75-27-4	Bromodichloromethane	8.43E-08	1	1	1	8.43E-08
173	75-34-3	1,1-Dichloroethane	7.92E-08	1	1	1	7.92E-08
174	75-35-4	1,1-Dichloroethene (Vinylidene chloride)	7.76E-08	1	1	1	7.76E-08
175	75-43-4	Dichlorofluoromethane	7.78E-08	1	1	1	7.78E-08
176	75-45-6	Chlorodifluoromethane	7.76E-08	1	1	1	7.76E-08
177	75-50-3	Trimethylamine	1.43E-07	1	1	1	1.43E-07
178	75-52-5	Nitromethane	8.47E-07	1	1	1	8.47E-07
179	75-55-8	2-Methylaziridine	1.09E-06	1	1	1	1.09E-06
180	75-61-6	Difluorodibromomethane	7.76E-08	1	1	1	7.76E-08
181	75-63-8	Trifluorobromomethane	7.69E-08	1	1	1	7.69E-08
182	75-65-0	2-Methyl-2-propanol	2.39E-07	1	1	1	2.39E-07
183	75-69-4	Trichlorofluoromethane	7.72E-08	1	1	1	7.72E-08
184	75-71-8	Dichlorodifluoromethane	7.69E-08	1	1	1	7.69E-08
185	75-99-0	2,2-Dichloropropionic acid	2.82E-06	1	1	1	2.82E-06
186	76-03-9	Trichloroacetic acid	6.33E-07	1	1	1	6.33E-07
187	76-11-9	1,1,1,2-Tetrachloro-2,2-difluoroethane	3.50E-07	1	1	1	3.50E-07
188	76-12-0	1,1,2,2-Tetrachloro-1,2-difluoroethane	3.51E-07	1	1	1	3.51E-07
189	76-13-1	1,2,2-Trichloro-1,1,2-trifluoroethane (Freon 113)	7.69E-08	1	1	1	7.69E-08
190	76-14-2	1,2-Dichloro-1,1,2,2-tetrafluoroethane	7.71E-08	1	1	1	7.71E-08
191	76-15-3	Chloropentafluoromethane	7.70E-08	1	1	1	7.70E-08
192	76-44-8	Heptachlor	1.03E-08	1	1	1	1.03E-08
193	78-83-1	2-Methylpropyl alcohol (Isobutyl alcohol)	1.09E-06	1	1	1	1.09E-06
194	78-87-5	1,2-Dichloropropane	7.92E-08	1	1	1	7.92E-08
195	78-92-2	1-Methylpropyl alcohol (2-Butanol)	2.39E-07	1	1	1	2.39E-07
196	78-93-3	Methyl ethyl ketone (MEK, 2-Butanone)	1.86E-07	1	1	1	1.86E-07
197	79-00-5	1,1,2-Trichloroethane	8.33E-08	1	1	1	8.33E-08
198	79-01-6	Trichloroethylene	7.78E-08	1	1	1	7.78E-08
199	79-09-4	Propionic acid	2.44E-06	1	1	1	2.44E-06
200	79-10-7	2-Propenoic acid	2.44E-06	1	1	1	2.44E-06
201	79-20-9	Methyl acetate	6.48E-07	1	1	1	6.48E-07
202	79-34-5	1,1,2,2-Tetrachloroethane	9.69E-08	1	1	1	9.69E-08
203	8001-35-2	Toxaphene	1.20E-08	5	2000	100	1.20E-14
204	82-68-8	Pentachloronitrobenzene (PCBN or quintobenzene)	8.47E-07	1	1	1	8.47E-07
205	83-32-9	Acenaphthene	6.30E-07	1	1	1	6.30E-07
206	84-66-2	Diethyl phthalate	1.92E-06	1	1	1	1.92E-06
207	84-74-2	Dibutyl phthalate	1.89E-06	5	2000	100	1.89E-12
208	85-01-8	Phenanthrene	8.47E-07	1	1	1	8.47E-07
209	85-68-7	Butylbenzyl phthalate	1.89E-06	5	2000	100	1.89E-12
210	86-73-7	Fluorene	6.48E-07	5	2000	100	6.48E-13
211	87-68-3	Hexachlorobutadiene	7.79E-08	1	1	1	7.79E-08
212	87-86-5	Pentachlorophenol	2.82E-06	1	1	1	2.82E-06
213	88-06-2	2,4,6-Trichlorophenol	1.42E-06	1	1	1	1.42E-06
214	88-72-2	2-Nitrotoluene	2.31E-07	1	1	1	2.31E-07
215	88-75-5	2-Nitrophenol	1.05E-06	1	1	1	1.05E-06
216	88-85-7	2-sec-Butyl-4,6-dinitrophenol (Dinoseb)	3.20E-06	5	2000	100	3.20E-12
217	88-89-1	Picric acid	1.03E-05	5	2000	100	1.03E-11
218	91-20-3	Naphthalene	1.45E-08	1	1	1	1.45E-08
219	91-22-5	Quinoline	1.45E-06	1	1	1	1.45E-06
220	91-58-7	2-Chloronaphthalene	4.40E-07	1	1	1	4.40E-07
221	92-52-4	1,1'-Biphenyl	4.40E-07	1	1	1	4.40E-07
222	92-93-3	4-Nitrobiphenyl	1.42E-06	5	2000	100	1.42E-12
223	93-72-1	Silvex (2,4,5-TP)	2.88E-06	5	2000	100	2.88E-12
224	93-76-5	2,4,5-T	2.88E-06	5	2000	100	2.88E-12
225	94-75-7	2,4-D and esters (1600 typed)	2.82E-06	1	1	1	2.82E-06
226	95-13-6	Indene	3.83E-07	1	1	1	3.83E-07
227	95-47-6	o-Xylene	7.92E-08	1	1	1	7.92E-08
228	95-48-7	o-Cresol (2-Methylphenol)	3.20E-07	1	1	1	3.20E-07
229	95-49-8	2-Chlorotoluene	3.60E-07	1	1	1	3.60E-07
230	95-50-1	o-Dichlorobenzene (1,2-Dichlorobenzene)	8.43E-08	1	1	1	8.43E-08
231	95-57-8	2-Chlorophenol	1.09E-06	1	1	1	1.09E-06
232	95-95-4	2,4,5-Trichlorophenol	1.45E-06	1	1	1	1.45E-06
233	96-22-0	3-Pentanone	1.43E-07	1	1	1	1.43E-07
234	96-69-5	Bis(3-tert-butyl-4-hydroxy-6-methyl-phenyl)sulfide	3.60E-07	5	2000	100	3.60E-13
235	98-51-1	p-tert-Butyltoluene	3.53E-07	1	1	1	3.53E-07
236	98-82-8	Cumene	3.54E-07	1	1	1	3.54E-07
237	98-83-9	alpha-Methylstyrene	7.92E-08	1	1	1	7.92E-08
238	98-86-2	Acetophenone	1.07E-06	1	1	1	1.07E-06
239	98-95-3	Nitrobenzene	1.05E-06	1	1	1	1.05E-06
240							9.58E-05

Table B-6 LMP06 - Unabated [illegible]

Row	CAS #	COPC	Feed Rate g/sec	in ACM	Group	Grouping	Phase	LMP06 rate g/sec	Performance Factor	Adjusted PF	Cap'd rate LMP06 g/sec
4	100-00-5	p-Nitrochlorobenzene	3.49E-02	No		10	vapor			7.30E-03	2.55E-04
5	100-21-0	p-Phthalic acid	3.49E-02	Yes	1	1	vapor	2.48E-02	7.12E-01		2.48E-02
6	100-25-4	1,4-Dinitrobenzene	3.49E-02	No		6	particle			6.53E-01	2.28E-02
7	100-41-4	Ethyl benzene	7.67E-03	No		20	vapor			0.00E+00	0.00E+00
8	100-42-5	Styrene	7.67E-03	No		19	vapor			0.00E+00	0.00E+00
9	10061-01-5	cis-1,3-Dichloropropene	7.67E-03	Yes	19	19	vapor	0.00E+00	0.00E+00		0.00E+00
10	10061-02-6	trans-1,3-Dichloropropene	7.67E-03	No		17	vapor			0.00E+00	0.00E+00
11	101-55-3	4-Bromophenylphenyl ether	3.49E-02	No		14	vapor			2.94E-06	1.03E-07
12	101-84-8	Diphenyl ether	7.67E-03	No		16	vapor			9.71E-11	7.45E-13
13	106-35-4	3-Heptanone	7.67E-03	No		14	vapor			2.94E-06	2.26E-08
14	106-42-3	p-Xylene (Dimethyl benzene)	7.67E-03	No		19	vapor			0.00E+00	0.00E+00
15	106-46-7	1,4-Dichlorobenzene	7.67E-03	No		18	vapor			0.00E+00	0.00E+00
16	106-88-7	1,2-Epoxybutane	7.67E-03	No		15	vapor			1.48E-07	1.14E-09
17	106-93-4	Ethylene dibromide (Dibromoethane)	3.49E-02	Yes	18	18	vapor	1.02E-11	2.91E-10		1.02E-11
18	106-97-8	Butane	7.67E-03	Yes	26	26	vapor	0.00E+00	0.00E+00		0.00E+00
19	106-99-0	1,3-Butadiene	7.67E-03	Yes	23	23	vapor	0.00E+00	0.00E+00		0.00E+00
20	107-02-8	Acrolein	7.67E-03	No		14	vapor			2.94E-06	2.26E-08
21	107-05-1	3-Chloropropene (Allyl chloride)	7.67E-03	No		20	vapor			0.00E+00	0.00E+00
22	107-06-2	1,2-Dichloroethane (Ethylene chloride)	7.67E-03	No		17	vapor			0.00E+00	0.00E+00
23	107-12-0	Propionitrile	7.67E-03	No		13	vapor			5.27E-05	4.05E-07
24	107-13-1	Acrylonitrile	7.67E-03	No		14	vapor			2.94E-06	2.26E-08
25	107-18-6	2-Propene-1-ol	3.49E-02	No		10	vapor			7.30E-03	2.55E-04
26	107-31-3	Formic acid, methyl ester	3.49E-02	No		15	vapor			1.48E-07	5.16E-09
27	107-66-4	Dibutylphosphate	3.49E-02	No		5	particle			6.88E-01	2.40E-02
28	107-87-9	2-Pentanone	7.67E-03	No		14	vapor			2.94E-06	2.26E-08
29	108-03-2	1-Nitropropane	3.49E-02	No		14	vapor			2.94E-06	1.03E-07
30	108-05-4	Vinyl acetate	3.49E-02	No		16	vapor			9.71E-11	3.39E-12
31	108-10-1	Hexone (4-Methyl-2-pentanone or MIBK)	7.67E-03	No		14	vapor			2.94E-06	2.26E-08
32	108-20-3	Isopropyl ether	7.67E-03	No		19	vapor			0.00E+00	0.00E+00
33	108-38-3	m-Xylene (Dimethyl benzene)	7.67E-03	No		19	vapor			0.00E+00	0.00E+00
34	108-39-4	m-Cresol	3.49E-02	No		10	vapor			7.30E-03	2.55E-04
35	108-87-2	Methylcyclohexane	7.67E-03	Yes	25	25	vapor	0.00E+00	0.00E+00		0.00E+00
36	108-88-3	Toluene	7.67E-03	Yes	19	19	vapor	0.00E+00	0.00E+00		0.00E+00
37	108-90-7	Chlorobenzene	7.67E-03	No		18	vapor			0.00E+00	0.00E+00
38	108-93-0	Cyclohexanol	7.67E-03	No		10	vapor			7.30E-03	5.60E-05
39	108-94-1	Cyclohexanone	7.67E-03	No		11	vapor			1.53E-03	1.17E-05
40	108-95-2	Phenol	3.49E-02	Yes	8	8	vapor	9.42E-03	2.70E-01		9.42E-03
41	109-66-0	n-Pentane	7.67E-03	No		26	vapor			0.00E+00	0.00E+00
42	109-99-9	Tetrahydrofuran	1.63E-02	No		13	vapor			5.27E-05	8.59E-07
43	110-12-3	5-Methyl-2-hexanone	7.67E-03	No		15	vapor			1.48E-07	1.14E-09
44	110-43-0	2-Heptanone	7.67E-03	No		15	vapor			1.48E-07	1.14E-09
45	110-54-3	n-Hexane	7.67E-03	Yes	27	27	vapor	0.00E+00	0.00E+00		0.00E+00
46	110-62-3	n-Valeraldehyde	3.49E-02	No		15	vapor			1.48E-07	5.16E-09
47	110-82-7	Cyclohexane	7.67E-03	Yes	24	24	vapor	0.00E+00	0.00E+00		0.00E+00
48	110-83-8	Cyclohexene	7.67E-03	No		22	vapor			0.00E+00	0.00E+00
49	110-86-1	Pyridine	3.49E-02	No		11	vapor			1.53E-03	5.35E-05
50	111-65-9	n-Octane	7.67E-03	No		28	vapor			0.00E+00	0.00E+00
51	111-76-2	Ethylene glycol monobutyl ether	3.49E-02	No		9	vapor			3.38E-02	1.18E-03
52	111-84-2	n-Nonane	7.67E-03	Yes	28	28	vapor	0.00E+00	0.00E+00		0.00E+00
53	117-81-7	Bis(2-ethylhexyl)phthalate (DEHP)	3.49E-02	No		30	particle			2.72E-01	9.49E-03
54	117-84-0	n-Dioctyl phthalate	3.49E-02	No		32	particle			5.28E-03	1.84E-04
55	118-74-1	Hexachlorobenzene	7.21E-04	Yes	18	18	vapor	0.00E+00	0.00E+00		0.00E+00
56	120-12-7	Anthracene	3.49E-02	Yes	13	13	vapor	8.55E-07	2.45E-05		8.55E-07
57	120-82-1	1,2,4-Trichlorobenzene	7.67E-03	Yes	17	17	vapor	0.00E+00	0.00E+00		0.00E+00
58	120-83-2	2,4-Dichlorophenol	3.49E-02	No		10	vapor			7.30E-03	2.55E-04
59	121-44-8	Triethylamine	7.67E-03	No		15	vapor			1.48E-07	1.14E-09
60	121-69-7	Dimethylaniline	7.67E-03	No		13	vapor			5.27E-05	4.05E-07
61	122-39-4	N,N-Diphenylamine	7.67E-03	Yes	10	10	vapor	8.77E-05	1.14E-02		8.77E-05
62	123-19-3	4-Heptanone	7.67E-03	No		13	vapor			5.27E-05	4.05E-07
63	123-38-6	n-Propionaldehyde	7.67E-03	No		14	vapor			2.94E-06	2.26E-08
64	123-51-3	3-Methyl-1-butanol	7.67E-03	No		12	vapor			9.00E-04	6.90E-06
65	123-86-4	Acetic acid n-butyl ester	3.49E-02	No		16	vapor			9.71E-11	3.39E-12
66	123-91-1	1,4-Dioxane	2.09E-02	No		10	vapor			7.30E-03	1.53E-04
67	126-73-8	Tributyl phosphate	3.49E-02	Yes	7	7	vapor	1.52E-02	4.36E-01		1.52E-02
68	126-98-7	2-Methyl-2-propenenitrile (Methacrylonitrile)	7.67E-03	No		16	vapor			9.71E-11	7.45E-13
69	127-18-4	Perchloroethylene (tetrachloroethylene)	7.67E-03	Yes	21	21	vapor	0.00E+00	0.00E+00		0.00E+00
70	127-19-5	N,N-Dimethylacetamide	7.67E-03	No		5	vapor			6.88E-01	5.28E-03
71	128-37-0	2,6-Bis(tert-butyl)-4-methylphenol	3.49E-02	No		32	vapor			5.28E-03	1.84E-04
72	129-00-0	Pyrene	3.49E-02	Yes	33	33	particle	4.53E-05	1.30E-03		4.53E-05
73	1321-64-8	Pentachloronaphthalene	3.49E-02	No		14	particle			2.94E-06	1.03E-07
74	1321-65-9	Trichloronaphthalene	3.49E-02	No		15	vapor			1.48E-07	5.16E-09
75	132-64-9	Dibenzofuran	3.49E-02	Yes	15	15	vapor	5.16E-09	1.48E-07		5.16E-09
76	1335-87-1	Hexachloronaphthalene	3.49E-02	No		14	particle			2.94E-06	1.03E-07
77	1335-88-2	Tetrachloronaphthalene	3.49E-02	No		15	particle			1.48E-07	5.16E-09
78	1336-36-3	Polychlorinated biphenyls (PCBs)	1.31E-02	Yes	35	35	particle	5.47E-11	4.52E-09		5.42E-11
79	141-78-6	Acetic acid ethyl ester (Ethyl acetate)	3.49E-02	No		14	vapor			2.94E-06	1.03E-07
80	141-79-7	4-Methyl-3-penten-2-one	3.49E-02	No		13	vapor			5.27E-05	1.84E-06
81	142-82-5	n-Heptane	7.67E-03	No		27	vapor			0.00E+00	0.00E+00
82	144-62-7	Oxalic acid	3.49E-02	Yes	3	3	vapor	2.48E-03	7.10E-01		2.48E-03
83	156-60-5	trans-1,2-Dichloroethylene	7.67E-03	No		20	vapor			0.00E+00	0.00E+00
84	1582-09-8	Trifluralin	3.49E-02	No		14	particle			2.94E-06	1.03E-07
85	1634-04-4	Methyl tert-butyl ether	7.67E-03	No		16	vapor			9.71E-11	7.45E-13
86	1836-75-5	Nitrofen	3.49E-02	No		30	particle			2.72E-01	9.49E-03
87	189-55-9	Dibenzo(a,i)pyrene	3.49E-02	No		5	particle			6.88E-01	2.40E-02
88	189-64-0	Dibenzo(a,h)pyrene	3.49E-02	No		5	particle			6.88E-01	2.40E-02
89	191-24-2	Benzo(g,h,i)perylene	3.49E-02	No		30	particle			2.72E-01	9.49E-03
90	191-30-0	Dibenzo(a,l)pyrene	3.49E-02	No		5	particle			6.88E-01	2.40E-02
91	192-65-4	Dibenzo(a,e)pyrene	3.49E-02	No		5	particle			6.88E-01	2.40E-02
92	193-39-5	Indeno(1,2,3-cd)pyrene	3.49E-02	No		30	particle			2.72E-01	9.49E-03
93	205-82-3	Benzo(j)fluoranthene	3.49E-02	No		7	particle			4.36E-01	1.52E-02
94	205-99-2	Benzo(b)fluoranthene	3.49E-02	No		30	particle			2.72E-01	9.49E-03
95	206-44-0	Fluoranthene	3.49E-02	No		33	particle			1.17E-03	4.07E-05
96	207-08-9	Benzo(k)fluoranthene	3.49E-02	No		30	particle			2.72E-01	9.49E-03
97	208-96-8	Acenaphthylene	3.49E-02	Yes	14	14	vapor	1.03E-07	2.94E-06		1.03E-07
98	218-01-9	Chrysene	3.49E-02	Yes	32	32	particle	2.40E-04	6.88E-03		2.40E-04
99	2234-13-1	Octachloronaphthalene	3.49E-02	No		14	particle			2.94E-06	1.03E-07
100	224-42-0	Dibenz(a,j)acridine	3.49E-02	No		4	particle			7.08E-01	2.47E-02
101	226-36-8	Dibenz(a,h)acridine	3.49E-02	No		4	particle			7.08E-01	2.47E-02
102	2385-85-5	Mirex	3.49E-02	No		17	vapor			0.00E+00	0.00E+00
103	25551-13-7	Trimethyl benzene	7.67E-03	No		19	vapor			0.00E+00	0.00E+00
104	26140-60-3	Terphenyls	3.49E-02	No		34	particle			2.74E-05	9.55E-07
105	27154-33-2	Trichlorofluoroethane	7.67E-03	No		25	vapor			0.00E+00	0.00E+00
106	287-92-3	Cyclopentane	7.67E-03	No		24	vapor			0.00E+00	0.00E+00
107	309-00-2	Aldrin	4.30E-04	Yes	34	34	particle	1.18E-08	2.74E-05		1.18E-08
108	319-84-6	Hexachlorocyclohexane (Lindane) Alpha BHC	1.16E-04	No		33	vapor			1.17E-03	1.36E-07
109	319-85-7	Hexachlorocyclohexane (Lindane) Beta BHC	1.16E-04	Yes	30	30	particle	3.11E-05	2.67E-01		3.11E-05
110	319-86-8	Delta-BHC	1.16E-04	No		30	particle			2.72E-01	3.16E-05
111	3697-24-3	5-Methylchrysene	3.49E-02	No		32	particle			5.28E-03	1.84E-04
112	3825-26-1	Ammonium perfluorooctanoate	3.49E-02	No		14	particle			2.94E-06	1.03E-07
113	4170-30-3	2-Butenaldehyde (2-Butenal or Crotonaldehyde)	7.67E-03	Yes	11	11	vapor	1.16E-05	1.51E-03		1.16E-05
114	465-73-6	Isodrin	2.32E-04	No		33	vapor			4.53E-05	1.05E-08
115	50-00-0	Formaldehyde	7.67E-03	No		8	vapor			3.20E-01	2.46E-03
116	50-29-3	4,4-DDT	2.32E-04	No		33	particle			1.17E-03	2.72E-07
117	50-32-8	Benzo(a)pyrene	4.42E-04	Yes	30	30	particle	1.22E-04	2.77E-01		1.22E-04
118	53-70-3	Dibenzo(a,h)anthracene	5.81E-05	No		7	particle			4.36E-01	2.53E-05
119	540-59-0	1,2-Dichloroethylene	7.67E-03	No		19	vapor			0.00E+00	0.00E+00
120	540-84-1	2,2,4-Trimethylpentane	7.67E-03	No		29	vapor			0.00E+00	0.00E+00
121	541-73-1	1,3-Dichlorobenzene	7.67E-03	No		19	vapor			0.00E+00	0.00E+00
122	56-23-5	Carbon tetrachloride	7.67E-03	Yes	22	22	vapor	0.00E+00	0.00E+00		0.00E+00
123	563-80-4	3-Methyl-2-butanone	7.67E-03	No		14	vapor			2.94E-06	2.26E-08
124	56-49-5	3-Methylcholanthrene	3.49E-02	No		29	particle			0.00E+00	0.00E+00
125	56-55-3	Benzo(a)anthracene	3.49E-02	No		33	particle			1.17E-03	4.07E-05
126	57-14-7	1,1-Dimethylhydrazine	3.49E-02	Yes	12	12	vapor	3.14E-05	9.00E-04		3.14E-05
127	58-89-9	gamma-BHC (Lindane)	1.16E-04	Yes	32	32	particle	4.92E-07	4.25E-03		4.92E-07
128	58-90-2	2,3,4,6-Tetrachlorophenol	3.49E-02	Yes	11	11	vapor	6.24E-05	1.79E-03		6.24E-05
129	591-78-6	2-Hexanone	7.67E-03	No		14	vapor			2.94E-06	2.26E-08
130	59-50-7	4-Chloro-3-methylphenol	3.49E-02	No		32	particle			5.28E-03	1.84E-04
131	59-89-2	N-Nitrosomorpholine	3.49E-02	No		6	vapor			6.53E-01	2.28E-02
132	602-87-9	5-Nitroacenaphthene	3.49E-02	No		9	particle			3.38E-02	1.18E-03
133	60-29-7	Ethyl ether	3.49E-02	No		17	vapor			0.00E+00	0.00E+00
134	603-34-9	Triphenylamine	3.49E-02	Yes	32	32	vapor	1.60E-04	4.72E-03		1.60E-04
135	60-34-4	Methylhydrazine	7.67E-03	No		10	vapor			7.30E-03	5.60E-05
136	60-35-5	Acetamide	7.67E-03	Yes	5	5	vapor	5.28E-03	6.88E-01		5.28E-03
137	60-57-1	Dieldrin	2.32E-04	Yes	33	33	particle	2.41E-07	1.04E-03		2.41E-07
138	621-64-7	Di-n-Propylnitrosamine (N-Nitroso-di-n-propylamine)	3.49E-02	No		10	vapor			7.30E-03	2.55E-04
139	624-83-9	Methyl isocyanate	7.67E-03	No		17	vapor			0.00E+00	0.00E+00
140	627-13-4	Nitric acid, propyl ester	3.49E-02	No		17	vapor			0.00E+00	0.00E+00
141	62-75-9	N-Nitroso-N,N-dimethylamine (Dimethylnitrosamine)	6.51E-02	Yes	9	9	vapor	2.20E-03	3.38E-02		2.20E-03
142	630-20-6	1,1,1,2-Tetrachloroethane	7.67E-03	No		18	vapor			0.00E+00	0.00E+00
143	64-17-5	Ethyl alcohol	7.67E-03	No		10	vapor			7.30E-03	5.60E-05
144	64-18-6	Formic acid	3.49E-02	No		7	vapor			4.36E-01	1.52E-02
145	64-19-7	Acetic acid	3.49E-02	No		6	vapor			6.53E-01	2.28E-02
146	67-56-1	Methyl alcohol (Methanol)	7.67E-03	No		10	vapor			7.30E-03	5.60E-05
147	67-63-0	2-Propyl alcohol (Isopropanol; Propan-2-ol)	7.67E-03	No		11	vapor			1.53E-03	1.17E-05
148	67-64-1	2-Propanone (Acetone)	4.19E-02	No		13	vapor			5.27E-05	2.21E-06
149	67-66-3	Chloroform	7.67E-03	No		19	vapor			0.00E+00	0.00E+00
150	67-72-1	Hexachloroethane	3.49E-02	No		19	vapor			0.00E+00	0.00E+00
151	684-16-2	Hexafluoroacetone	7.67E-03	No		19	vapor			0.00E+00	0.00E+00
152	71-23-8	n-Propyl alcohol	7.67E-03	No		11	vapor			1.53E-03	1.17E-05
153	71-36-3	n-Butyl alcohol	7.67E-03	No		11	vapor			1.53E-03	1.17E-05
154	71-43-2	Benzene	7.67E-03	Yes	19	19	vapor	0.00E+00	0.00E+00		0.00E+00
155	71-55-6	Methyl chloroform (1,1,1-Trichloroethane)	7.67E-03	No		21	vapor			0.00E+00	0.00E+00
156	72-20-8	Endrin	2.32E-04	No		32	particle			5.28E-03	1.22E-06
157	72-43-5	Methoxychlor	1.16E-03	No		7	particle			4.36E-01	5.07E-04
158	72-54-8	4,4-DDD	2.32E-04	No		32	particle			5.28E-03	1.22E-06
159	72-55-9	4,4-DDE	2.32E-04	No		34	particle			2.74E-05	6.36E-09
160	74-83-9	Bromomethane (Methyl bromide)	7.67E-03	No		19	vapor			0.00E+00	0.00E+00
161	74-87-3	Chloromethane (Methyl chloride)	7.67E-03	No		20	vapor			0.00E+00	0.00E+00
162	74-97-5	Bromochloromethane	7.67E-03	No		17	vapor			0.00E+00	0.00E+00
163	74-99-7	Methylacetylene	3.49E-02	No		26	vapor			0.00E+00	0.00E+00
164	75-00-3	Chloroethane	7.67E-03	No		20	vapor			0.00E+00	0.00E+00
165	75-01-4	Vinyl chloride (1-Chloroethene)	3.49E-02	No		22	vapor			0.00E+00	0.00E+00
166	75-05-8	Acetonitrile	1.09E-02	Yes	13	13	vapor	8.85E-07	8.10E-05		8.85E-07
167	75-07-0	Acetaldehyde	3.49E-02	No		13	vapor			5.27E-05	1.84E-06
168	75-09-2	Dichloromethane (Methylene chloride)	7.67E-03	No		19	vapor			0.00E+00	0.00E+00
169	75-12-7	Formamide	3.49E-02	Yes	4	4	vapor	2.47E-02	7.08E-01		2.47E-02
170	75-15-0	Carbon disulfide	7.67E-03	No		20	vapor			0.00E+00	0.00E+00
171	75-21-8	Ethylene oxide (Oxirane)	7.67E-03	No		15	vapor			1.48E-07	1.14E-09
172	75-27-4	Bromodichloromethane	7.67E-03	No		18	vapor			0.00E+00	0.00E+00
173	75-34-3	1,1-Dichloroethane	7.67E-03	No		19	vapor			0.00E+00	0.00E+00
174	75-35-4	1,1-Dichloroethene (Vinylidene chloride)	7.67E-03	No		22	vapor			0.00E+00	0.00E+00
175	75-43-4	Dichlorofluoromethane	7.67E-03	No		25	vapor			0.00E+00	0.00E+00
176	75-45-6	Chlorodifluoromethane	7.67E-03	No		20	vapor			0.00E+00	0.00E+00
177	75-50-3	Trimethylamine	7.67E-03	No		14	vapor			2.94E-06	2.26E-08
178	75-52-5	Nitromethane	3.49E-02	No		13	vapor			5.27E-05	1.84E-06
179	75-55-8	2-Methylaziridine	3.49E-02	No		11	vapor			1.53E-03	5.35E-05
180	75-61-6	Difluorodibromomethane	7.67E-03	No		22	vapor			0.00E+00	0.00E+00
181	75-63-8	Trifluorobromomethane	7.67E-03	No		25	vapor			0.00E+00	0.00E+00
182	75-65-0	2-Methyl-2-propanol	7.67E-03	No		11	vapor			1.53E-03	1.17E-05
183	75-69-4	Trichlorofluoromethane	7.67E-03	No		23	vapor			0.00E+00	0.00E+00
184	75-71-8	Dichlorodifluoromethane	7.67E-03	No		25	vapor			0.00E+00	0.00E+00
185	75-99-0	2,2-Dichloropropionic acid	3.49E-02	No		6	vapor			6.53E-01	2.28E-02
186	76-03-9	Trichloroacetic acid	7.67E-03	No		5	vapor			6.88E-01	5.28E-03
187	76-11-9	1,1,1,2-Tetrachloro-2,2-difluoroethane	3.49E-02	No		24	vapor			0.00E+00	0.00E+00
188	76-12-0	1,1,2,2-Tetrachloro-1,2-difluoroethane	3.49E-02	No		23	vapor			0.00E+00	0.00E+00
189	76-13-1	1,2,2-Trichloro-1,1,2-trifluoroethane (Freon 113)	7.67E-03	No		26	vapor			0.00E+00	0.00E+00
190	76-14-2	1,2-Dichloro-1,1,2,2-tetrafluoroethane	7.67E-03	No		25	vapor			0.00E+00	0.00E+00
191	76-15-3	Chloropentafluoroethane	7.67E-03	Yes	29	29	vapor	0.00E+00	0.00E+00		0.00E+00
192	76-44-8	Heptachlor	7.58E-04	Yes	16	16	vapor	0.00E+00	0.00E+00		0.00E+00
193	78-83-1	2-Methylpropyl alcohol (Isobutyl alcohol)	3.49E-02	No		11	vapor			1.53E-03	5.35E-05
194	78-87-5	1,2-Dichloropropane	7.67E-03	No		19	vapor			0.00E+00	0.00E+00
195	78-92-2	1-Methylpropyl alcohol (2-Butanol)	7.67E-03	No		11	vapor			1.53E-03	1.17E-05
196	78-93-3	Methyl ethyl ketone (MEK, 2-Butanone)	7.67E-03	No		13	vapor			5.27E-05	4.05E-07
197	79-00-5	1,1,2-Trichloroethane	7.67E-03	No		17	vapor			0.00E+00	0.00E+00
198	79-01-6	Trichloroethylene	7.67E-03	Yes	20	20	vapor	0.00E+00	0.00E+00		0.00E+00
199	79-09-4	Propionic acid	3.49E-02	No		3	vapor			3.20E-01	1.12E-02
200	79-10-7	2-Propenoic acid	3.49E-02	No		3	vapor			3.20E-01	1.12E-02
201	79-20-9	Methyl acetate	3.49E-02	No		14	vapor			2.94E-06	1.03E-07

Adjusted Performance Factors

Group	PF
1	7.12E-01
2	6.48E-01
3	7.10E-01
4	7.08E-01
5	6.88E-01
6	6.53E-01
7	4.36E-01
8	3.20E-01
9	3.38E-02
10	7.30E-03
11	1.53E-03
12	9.00E-04
13	5.27E-05
14	2.94E-06
15	1.48E-07
16	9.71E-11
17	0.00E+00
18	0.00E+00
19	0.00E+00
20	0.00E+00
21	0.00E+00
22	0.00E+00
23	0.00E+00
24	0.00E+00
25	0.00E+00
26	0.00E+00
27	0.00E+00
28	0.00E+00
29	0.00E+00
30	2.72E-01
31	5.36E-02
32	5.28E-03
33	1.17E-03
34	2.74E-05
35	4.52E-09

Coplanar PCBs		LMP06 g/sec
31508-00-6	2,3',4,4',5-Pentachlorobiphenyl (PBC 118)	3.91E-14
32598-13-3	3,3',4,4'-Tetrachlorobiphenyl (TCB)	3.91E-14
32598-14-4	2,3,3',4,4'-Pentachlorobiphenyl (PCB 105)	3.91E-14
32774-16-6	3,3',4,4',5,5'-Hexachlorobiphenyl	3.91E-14
35065-29-3	2,2',3,4,4',5,5'-Heptachlorobiphenyl	3.91E-14
35065-30-6	2,2',3,3',4,4',5-Heptachlorobiphenyl	3.91E-14
38380-08-4	2,3,3',4,4',5-Hexachlorobiphenyl (PCB 157)	3.91E-14
39635-31-9	2,3,3',4,4',5,5'-Heptachlorobiphenyl	3.91E-14
52663-72-6	2,3',4,4',5,5'-Hexachlorobiphenyl	3.91E-14
57465-28-8	3,3',4,4',5-Pentachlorobiphenyl	3.91E-14
65510-44-3	2',3,4,4',5-Pentachlorobiphenyl	3.91E-14
69782-90-7	2,3,3',4,4',5'-Hexachlorobiphenyl	3.91E-14
70362-50-4	3,4,4',5-Tetrachlorobiphenyl	3.91E-14
74472-37-0	2,3,4,4',5-Pentachlorobiphenyl	3.91E-14
1336-36-3	Polychlorinated biphenyls (PCBs)	5.42E-11
1336-36-3	UNCorrected (for coplanar PCBs)	5.47E-11

Correction for Coplanar PCBs

0.99	as parent
0.01	as coplanar sum

CALCULATION SHEET

BY: E Dorsey
DATE: 05/21/03

PROJECT: WTP
CALC NO. 24590-WTP-
SHEET REV. A
SHEET NO. 49

	A	B	C	D	E	F	G	H	I	J	K	L	M	N	O	P	Q	R	S	T	U	V	W
1	Table B-4 LMP08 - Unabated LAW Melter																						
2			Feed Rate					LMP08 rate	Performance	Adjusted	LMP08												
3	CAS #	COPC	g/sec	in ACM	Group	Grouping	Phase	g/sec	Factor	PF	g/sec		Adjusted Performance Factors										
232	79-34-5	1,1,2,2-Tetrachloroethane	7.67E-03	No		3	vapor			5.11E-17	7.67E-03												
233	9001-99-2	Toxaphene	2.67E-04	Yes	10	10	particle	8.46E-07	3.16E-03		8.46E-07												
234	60-68-9	Polychlorinated biphenyls (PCBs) (Aroclor mixtures)	3.49E-02	No		13	vapor			5.27E-05	1.84E-06												
235	53-70-3	Acenaphthene	3.49E-02	No		13	vapor			1.44E-07	5.14E-06												
236	84-66-2	Diethyl phthalate	3.49E-02	Yes	8	8	vapor	3.49E-02	1.12E-01		3.49E-02												
237	84-74-2	Dibutyl phthalate	3.49E-02	Yes	3	3	particle	1.04E-02	3.26E-02		1.04E-02												
238	85-01-8	Phenanthrene	3.49E-02	No		13	vapor			5.27E-05	1.84E-06												
239	85-68-7	Butylbenzyl phthalate	3.49E-02	No		11	particle			3.26E-03	1.14E-03												
240	86-73-7	Fluorene	3.49E-02	No		14	particle			2.94E-08	1.03E-07												
241	87-68-3	Hexachlorobutadiene	7.67E-03	Yes	20	20	vapor	5.00E-05	3.49E-05		3.49E-05												
242	87-86-5	Pentachlorophenol	3.49E-02	Yes	6	6	vapor	2.09E-02	4.00E-01		2.09E-02												
243	94-59-7	3,4-Methylenedioxysafrole	3.49E-02	No		16	vapor			7.32E-03	2.56E-04												
244	95-72-3	2-Methylaniline	7.67E-03	No		12	vapor			9.00E-04	6.90E-06												
245	95-76-1	3,4-Dichloroaniline	3.49E-02	No		12	vapor			9.00E-04	3.14E-05												
246	95-80-7	2,4-Diaminotoluene (Grouped)	3.49E-02	Yes	5	5	particle	1.04E-02	3.26E-01		1.04E-02												
247	98-95-3	Nitrobenzene	3.49E-02	Yes	2	2	particle	3.31E-01	9.49E-01		3.31E-01												
248	91-20-3	Naphthalene	1.16E-03	Yes	16	16	vapor	6.00E-06	5.00E-01		3.00E-06												
249	91-22-5	Quinoline	3.49E-02	No		9	vapor			3.30E-02	1.15E-03												
250	91-58-7	2-Chloronaphthalene	3.49E-02	No		15	vapor			9.71E-11	3.39E-12												
251	92-52-4	1,1'-Biphenyl	3.49E-02	No		10	vapor			9.71E-11	3.39E-12												
252	92-93-3	4-Nitrobiphenyl	3.49E-02	No		10	particle			7.84E-03	2.74E-04												
253	93-72-1	Silvex (2,4,5-TP)	3.49E-02	No		5	particle			4.44E-01	2.41E-02												
254	93-76-5	2,4,5-T	3.49E-02	No		5	particle			4.44E-01	2.41E-02												
255	94-75-7	2,4-D and esters (1980 Food)	3.49E-02	No		6	vapor			5.00E-01	2.00E-02												
256	95-13-6	Indene	3.49E-02	No		13	vapor			1.00E-04	3.49E-06												
257	95-47-6	o-Xylene	7.67E-03	No		13	vapor			3.49E-02	1.22E-03												
258	95-48-7	o-Cresol (2-Methylphenol)	7.67E-03	No		9	vapor			3.30E-02	2.53E-04												
259	95-49-8	2-Chlorotoluene	3.49E-02	No		13	vapor			3.49E-02	1.22E-03												
260	95-50-1	o-Dichlorobenzene (1,2-Dichlorobenzene)	7.67E-03	No		9	vapor			9.00E-04	6.90E-06												
261	95-57-8	2-Chlorophenol	3.49E-02	No		1	vapor			1.00E-03	3.49E-05												
262	95-95-4	2,4,5-Trichlorophenol	3.49E-02	No		9	vapor			3.30E-02	1.15E-03												
263	96-12-8	1,2-Dibromo-3-chloropropane	7.67E-03	No		14	vapor			2.94E-08	2.26E-08												
264	96-69-5	4,4'-Thiobis(6-tert-butyl-3-methylphenol)	3.49E-02	No		15	particle			2.03E-03	7.09E-02												
265	98-51-1	p-tert-Butylbenzene	3.49E-02	No		11	vapor			5.00E-04	1.75E-02												
266	98-82-8	Cumene	3.49E-02	No		10	vapor			5.00E-04	1.75E-02												
267	98-83-9	alpha-Methylstyrene	7.67E-03	No		13	vapor			5.00E-04	3.83E-06												
268	98-86-2	Acetophenone	3.49E-02	Yes	11	11	vapor	4.49E-03	1.28E-03		4.49E-03												
269	98-95-3	Nitrobenzene	3.49E-02	No		12	vapor			5.00E-04	1.74E-02												
270											2.82E-01												

Table 6-7 LVP01 - LAW Vessel Ventilation

Row	CAS #	COPC	Feed Rate g/sec	in ACM	Group	Grouping	Phase	LVP01 rate g/sec	Performance Factor	Adjusted PF	Calculated rate LVP01 g/sec
4	100-00-5	p-Chloronitrobenzene	3.49E-02	No		10	vapor			1.77E-10	6.16E-12
5	100-21-0	p-Phthalic acid	3.49E-02	Yes	1	1	vapor	5.46E-10	1.57E-08		5.46E-10
6	100-25-4	1,4-Dinitrobenzene	3.49E-02	No		6	particle			1.44E-08	5.01E-10
7	100-41-4	Ethylbenzene	7.67E-03	No		20	vapor			0.00E+00	0.00E+00
8	100-42-5	Styrene	7.67E-03	No		19	vapor			0.00E+00	0.00E+00
9	10061-01-5	cis-1,3-Dichloropropene	7.67E-03	Yes	15	15	vapor	0.00E+00	0.00E+00		0.00E+00
10	10061-02-6	trans-1,3-Dichloropropene	7.67E-03	No		17	vapor			0.00E+00	0.00E+00
11	101-55-3	4-Bromophenylphenyl ether	3.49E-02	No		14	vapor			6.47E-14	2.26E-15
12	101-84-8	Diphenyl ether	7.67E-03	No		16	vapor			2.14E-18	1.64E-20
13	106-35-4	3-Heptanone	7.67E-03	No		14	vapor			6.47E-14	4.96E-16
14	106-42-3	p-Xylene (Dimethyl benzene)	7.67E-03	No		19	vapor			0.00E+00	0.00E+00
15	106-46-7	1,4-Dichlorobenzene	7.67E-03	No		18	vapor			0.00E+00	0.00E+00
16	106-88-7	1,2-Epoxybutane	7.67E-03	No		15	vapor			3.25E-15	2.50E-17
17	106-93-4	Ethylene dibromide (Dibromoethane)	3.49E-02	Yes	16	16	vapor	2.24E-19	6.41E-18		2.24E-19
18	106-97-8	Butane	7.67E-03	Yes	26	26	vapor	0.00E+00	0.00E+00		0.00E+00
19	106-99-0	1,3-Butadiene	7.67E-03	Yes	27	27	vapor	0.00E+00	0.00E+00		0.00E+00
20	107-02-8	Acrolein	7.67E-03	No		14	vapor			6.47E-14	4.96E-16
21	107-05-1	3-Chloropropene (Allyl chloride)	7.67E-03	No		20	vapor			0.00E+00	0.00E+00
22	107-06-2	1,2-Dichloroethane (Ethylene chloride)	7.67E-03	No		17	vapor			0.00E+00	0.00E+00
23	107-12-0	Propionitrile	7.67E-03	No		13	vapor			1.16E-12	8.90E-15
24	107-13-1	Acrylonitrile	7.67E-03	No		14	vapor			6.47E-14	4.96E-16
25	107-18-6	2-Propene-1-ol	3.49E-02	No		10	vapor			1.77E-10	6.16E-12
26	107-31-3	Formic acid, methyl ester	3.49E-02	No		15	vapor			3.25E-15	1.14E-16
27	107-66-4	Dibutylphosphate	3.49E-02	No		5	particle			1.51E-08	5.28E-10
28	107-87-9	2-Pentanone	7.67E-03	No		14	vapor			6.47E-14	4.96E-16
29	108-03-2	1-Nitropropane	3.49E-02	No		14	vapor			6.47E-14	2.26E-15
30	108-05-4	Vinyl acetate	3.49E-02	No		16	vapor			2.14E-18	7.48E-20
31	108-10-1	Hexone (4-Methyl-2-pentanone or MIBK)	7.67E-03	No		14	vapor			6.47E-14	4.96E-16
32	108-20-3	Diisopropyl ether	7.67E-03	No		18	vapor			0.00E+00	0.00E+00
33	108-38-3	m-Xylene (Dimethyl benzene)	7.67E-03	No		19	vapor			0.00E+00	0.00E+00
34	108-39-4	m-Cresol	7.67E-03	No		9	vapor			7.43E-10	5.70E-12
35	108-87-2	Methylcyclohexane	7.67E-03	Yes	25	25	vapor	0.00E+00	0.00E+00		0.00E+00
36	108-88-3	Toluene	7.67E-03	Yes	19	19	vapor	0.00E+00	0.00E+00		0.00E+00
37	108-90-7	Chlorobenzene	7.67E-03	No		19	vapor			0.00E+00	0.00E+00
38	108-93-0	Cyclohexanol	7.67E-03	No		10	vapor			1.77E-10	1.36E-12
39	108-94-1	Cyclohexanone	7.67E-03	No		11	vapor			3.36E-11	2.58E-13
40	108-95-2	Phenol	3.49E-02	Yes	8	8	vapor	2.07E-10	5.94E-09		2.07E-10
41	109-66-0	n-Pentane	7.67E-03	No		26	vapor			0.00E+00	0.00E+00
42	109-99-9	Tetrahydrofuran	1.63E-03	No		13	vapor			1.16E-12	1.89E-15
43	110-12-3	5-Methyl-2-hexanone	7.67E-03	No		15	vapor			3.25E-15	2.50E-17
44	110-43-0	2-Heptanone	7.67E-03	No		15	vapor			3.25E-15	2.50E-17
45	110-54-3	n-Hexane	7.67E-03	Yes	27	27	vapor	0.00E+00	0.00E+00		0.00E+00
46	110-62-3	n-Valeraldehyde	3.49E-02	No		15	vapor			3.25E-15	1.14E-16
47	110-82-7	Cyclohexane	7.67E-03	Yes	24	24	vapor	0.00E+00	0.00E+00		0.00E+00
48	110-83-8	Cyclohexene	7.67E-03	No		22	vapor			0.00E+00	0.00E+00
49	110-86-1	Pyridine	3.49E-02	No		11	vapor			3.36E-11	1.17E-12
50	111-65-9	n-Octane	7.67E-03	No		28	vapor			0.00E+00	0.00E+00
51	111-76-2	Ethylene glycol monobutyl ether	3.49E-02	No		9	vapor			7.43E-10	2.59E-11
52	111-84-2	n-Nonane	7.67E-03	Yes	28	28	vapor	0.00E+00	0.00E+00		0.00E+00
53	117-81-7	Bis(2-ethylhexyl)phthalate (DEHP)	3.49E-02	No		30	particle			8.76E-09	3.06E-10
54	117-84-0	n-Dioctyl phthalate	3.49E-02	No		32	particle			1.54E-10	5.37E-12
55	118-74-1	Hexachlorobenzene	7.21E-04	Yes	18	18	vapor	0.00E+00	0.00E+00		0.00E+00
56	120-12-7	Anthracene	3.49E-02	Yes	13	13	vapor	1.88E-14	1.39E-13		1.88E-14
57	120-82-1	1,2,4-Trichlorobenzene	7.67E-03	Yes	17	17	vapor	0.00E+00	0.00E+00		0.00E+00
58	120-83-2	2,4-Dichlorophenol	3.49E-02	No		10	vapor			1.77E-10	6.16E-12
59	121-44-8	Triethylamine	7.67E-03	No		15	vapor			3.25E-15	2.50E-17
60	121-69-7	Dimethylaniline	7.67E-03	No		13	vapor			1.16E-12	8.90E-15
61	122-39-4	N,N-Diphenylamine	7.67E-03	Yes	10	10	vapor	1.93E-12	2.02E-10		1.93E-12
62	123-19-3	4-Heptanone	7.67E-03	No		13	vapor			1.16E-12	8.90E-15
63	123-38-6	n-Propionaldehyde	7.67E-03	No		14	vapor			6.47E-14	4.96E-16
64	123-51-3	3-Methyl-1-butanol	7.67E-03	No		12	vapor			1.98E-11	1.52E-13
65	123-86-4	Acetic acid, n-butyl ester	3.49E-02	No		16	vapor			2.14E-18	7.48E-20
66	123-91-1	1,4-Dioxane	2.09E-02	No		10	vapor			1.77E-10	3.70E-12
67	126-73-8	Tributyl phosphate	3.49E-02	Yes	7	7	vapor	3.35E-12	9.59E-09		3.35E-12
68	126-98-7	2-Methyl-2-propenenitrile (Methacrylonitrile)	7.67E-03	No		16	vapor			2.14E-18	1.64E-20
69	127-18-4	Perchloroethylene (tetrachloroethylene)	7.67E-03	Yes	21	21	vapor	0.00E+00	0.00E+00		0.00E+00
70	127-19-5	N,N-Dimethylacetamide	7.67E-03	No		5	vapor			1.51E-08	1.16E-10
71	128-37-0	2,6-Bis(tert-butyl)-4-methylphenol	3.49E-02	No		32	vapor			1.54E-10	5.37E-12
72	129-00-0	Pyrene	3.49E-02	Yes	33	33	particle	1.48E-12	4.19E-11		1.48E-12
73	1321-64-8	Pentachloronaphthalene	3.49E-02	No		14	particle			6.47E-14	2.26E-15
74	1321-65-9	Trichloronaphthalene	3.49E-02	No		15	vapor			3.25E-15	1.14E-16
75	132-64-9	Dibenzofuran	3.49E-02	Yes	15	15	vapor	1.14E-16	3.25E-15		1.14E-16
76	1335-87-1	Hexachloronaphthalene	3.49E-02	No		14	particle			6.47E-14	2.26E-15
77	1335-88-2	Tetrachloronaphthalene	3.49E-02	No		15	particle			3.25E-15	1.14E-16
78	1336-36-3	Polychlorinated biphenyls (PCBs)	1.21E-02	Yes	35	35	particle	1.75E-18	1.46E-16		1.75E-18
79	141-78-6	Acetic acid ethyl ester (Ethyl acetate)	3.49E-02	No		14	vapor			6.47E-14	2.26E-15
80	141-79-7	4-Methyl-3-penten-2-one	3.49E-02	No		13	vapor			1.16E-12	4.06E-14
81	142-82-5	n-Heptane	7.67E-03	No		27	vapor			0.00E+00	0.00E+00
82	144-62-7	Oxalic acid	3.49E-02	Yes	3	3	vapor	5.45E-11	1.56E-09		5.45E-11
83	156-60-5	trans-1,2-Dichloroethylene	7.67E-03	No		28	vapor			0.00E+00	0.00E+00
84	1582-09-8	Trifluralin	3.49E-02	No		14	particle			6.47E-14	2.26E-15
85	1634-04-4	Methyl tert-butyl ether	7.67E-03	No		16	vapor			2.14E-18	1.64E-20
86	1836-75-5	Nitrofen	3.49E-02	No		30	particle			8.76E-09	3.06E-10
87	189-55-9	Dibenzo(a,i)pyrene	3.49E-02	No		5	particle			1.51E-08	5.28E-10
88	189-64-0	Dibenzo(a,h)pyrene	3.49E-02	No		5	particle			1.51E-08	5.28E-10
89	191-24-2	Benzo(g,h,i)perylene	3.49E-02	No		30	particle			8.76E-09	3.06E-10
90	191-30-0	Dibenzo(a,l)pyrene	3.49E-02	No		5	particle			1.51E-08	5.28E-10
91	192-65-4	Dibenzo(a,e)pyrene	3.49E-02	No		5	particle			1.51E-08	5.28E-10
92	193-39-5	Indeno(1,2,3-cd)pyrene	3.49E-02	No		30	particle			8.76E-09	3.06E-10
93	205-82-3	Benzo(j)fluoranthene	3.49E-02	No		7	particle			9.59E-09	3.35E-10
94	205-99-2	Benzo(b)fluoranthene	3.49E-02	No		30	particle			8.76E-09	3.06E-10
95	206-44-0	Fluoranthene	3.49E-02	No		33	particle			3.76E-11	1.31E-12
96	207-08-9	Benzo(k)fluoranthene	3.49E-02	No		30	particle			8.76E-09	3.06E-10
97	208-96-8	Acenaphthylene	3.49E-02	Yes	14	14	vapor	2.26E-15	6.47E-14		2.26E-15
98	218-01-9	Chrysene	3.49E-02	Yes	33	33	particle	7.77E-13	2.22E-11		7.77E-13
99	2234-13-1	Octachloronaphthalene	3.49E-02	No		14	particle			6.47E-14	2.26E-15
100	224-42-0	Dibenz(a,j)acridine	3.49E-02	No		4	particle			1.56E-08	5.45E-10
101	226-36-8	Dibenz(a,h)acridine	3.49E-02	No		4	particle			1.56E-08	5.45E-10
102	2385-85-5	Mirex	3.49E-02	No		17	vapor			0.00E+00	0.00E+00
103	25551-13-7	Trimethyl benzene	7.67E-03	No		19	vapor			0.00E+00	0.00E+00
104	26140-60-3	Terphenyls	3.49E-02	No		34	particle			8.82E-13	3.08E-14
105	27154-33-2	Trichlorofluoroethane	7.67E-03	No		23	vapor			0.00E+00	0.00E+00
106	287-92-3	Cyclopentane	7.67E-03	No		24	vapor			0.00E+00	0.00E+00
107	309-00-2	Aldrin	4.32E-04	Yes	34	34	particle	3.79E-16	8.82E-13		3.79E-16
108	319-84-6	Hexachlorocyclohexane (Lindane) Alpha BHC	1.16E-04	No		33	vapor			3.76E-11	4.37E-15
109	319-85-7	Hexachlorocyclohexane (Lindane) Beta BHC	1.16E-04	Yes	30	30	particle	1.02E-12	8.81E-09		1.02E-12
110	319-86-8	Delta BHC	1.16E-04	No		30	particle			8.76E-09	1.02E-12
111	3697-24-3	5-Methylchrysene	3.49E-02	No		32	particle			1.54E-10	5.37E-12
112	3825-26-1	Ammonium perfluorooctanoate	3.49E-02	No		14	particle			6.47E-14	2.26E-15
113	4170-30-3	2-Butenaldehyde (2-Butenal or Crotonaldehyde)	7.67E-03	Yes	11	11	vapor	2.58E-13	3.36E-11		2.58E-13
114	465-73-6	Isodrin	2.32E-04	No		35	vapor			1.46E-16	3.38E-20
115	50-00-0	Formaldehyde	7.67E-03	No		8	vapor			5.97E-09	4.58E-11
116	50-29-3	4,4-DDT	2.32E-04	No		33	particle			3.76E-11	8.74E-15
117	50-32-8	Benzo(a)pyrene	4.42E-04	Yes	30	30	particle	3.84E-12	8.81E-09		3.84E-12
118	53-70-3	Dibenzo(a,h)anthracene	5.81E-03	No		7	particle			9.59E-09	5.58E-11
119	540-59-0	1,2-Dichloroethylene	7.67E-03	No		19	vapor			0.00E+00	0.00E+00
120	540-84-1	2,2,4-Trimethylpentane	7.67E-03	No		28	vapor			0.00E+00	0.00E+00
121	541-73-1	1,3-Dichlorobenzene	7.67E-03	No		19	vapor			0.00E+00	0.00E+00
122	56-23-5	Carbon tetrachloride	7.67E-03	Yes	22	22	vapor	0.00E+00	0.00E+00		0.00E+00
123	563-80-4	3-Methyl-2-butanone	7.67E-03	No		14	vapor			6.47E-14	4.96E-16
124	56-49-5	3-Methylcholanthrene	3.49E-02	No		28	particle			0.00E+00	0.00E+00
125	56-55-3	Benzo(a)anthracene	3.49E-02	No		33	particle			3.76E-11	1.31E-12
126	57-14-7	1,1-Dimethylhydrazine	3.49E-02	Yes	12	12	vapor	6.90E-13	1.98E-11		6.90E-13
127	58-89-9	gamma-BHC (Lindane)	1.16E-04	Yes	32	32	particle	1.58E-14	1.36E-10		1.58E-14
128	58-90-2	2,3,4,6-Tetrachlorophenol	3.49E-02	Yes	11	11	vapor	1.17E-12	3.36E-11		1.17E-12
129	591-78-6	2-Hexanone	7.67E-03	No		14	vapor			6.47E-14	4.96E-16
130	59-50-7	4-Chloro-3-methylphenol	3.49E-02	No		32	particle			1.54E-10	5.37E-12
131	59-89-2	N-Nitrosomorpholine	3.49E-02	No		6	vapor			1.44E-08	5.01E-10
132	600-57-6	2-Nitronaphthalene	3.49E-02	No		9	particle			7.43E-10	2.59E-11
133	60-29-7	Ethyl ether	3.49E-02	No		17	vapor			0.00E+00	0.00E+00
134	603-34-9	Triphenylamine	3.49E-02	Yes	32	32	vapor	5.37E-12	1.54E-10		5.37E-12
135	60-34-4	Methylhydrazine	7.67E-03	No		10	vapor			1.77E-10	1.36E-12
136	60-35-5	Acetamide	7.67E-03	Yes	5	5	vapor	1.16E-10	1.51E-08		1.16E-10
137	60-57-1	Dieldrin	2.32E-04	Yes	33	33	particle	7.78E-15	3.34E-11		7.78E-15
138	621-64-7	Di-n-Propylnitrosamine (N-Nitroso-di-n-propylamine)	3.49E-02	No		10	vapor			1.77E-10	6.16E-12
139	624-83-9	Methyl isocyanate	7.67E-03	No		17	vapor			0.00E+00	0.00E+00
140	627-13-4	Nitric acid, propyl ester	3.49E-02	No		17	vapor			0.00E+00	0.00E+00
141	62-75-9	N-Nitroso-N,N-dimethylamine (Dimethylnitrosamine)	6.01E-02	Yes	9	9	vapor	4.46E-11	7.43E-10		4.46E-11
142	630-20-6	1,1,1,2-Tetrachloroethane	7.67E-03	No		18	vapor			0.00E+00	0.00E+00
143	64-17-5	Ethyl alcohol	7.67E-03	No		10	vapor			1.77E-10	1.36E-12
144	64-18-6	Formic acid	3.49E-02	No		7	vapor			6.59E-09	2.30E-10
145	64-19-7	Acetic acid	3.49E-02	No		6	vapor			1.44E-08	5.01E-10
146	67-56-1	Methyl alcohol (Methanol)	7.67E-03	No		10	vapor			1.77E-10	1.36E-12
147	67-63-0	2-Propyl alcohol (Isopropanol, Propan-2-ol)	7.67E-03	No		11	vapor			3.36E-11	2.58E-13
148	67-64-1	2-Propanone (Acetone)	4.18E-02	No		13	vapor			1.16E-12	4.86E-14
149	67-66-3	Chloroform	7.67E-03	No		18	vapor			0.00E+00	0.00E+00
150	67-72-1	Hexachloroethane	3.49E-02	No		19	vapor			0.00E+00	0.00E+00
151	684-16-2	Hexafluoroacetone	7.67E-03	No		19	vapor			0.00E+00	0.00E+00
152	71-23-8	n-Propyl alcohol	7.67E-03	No		11	vapor			3.36E-11	2.58E-13
153	71-36-3	n-Butyl alcohol	7.67E-03	No		11	vapor			3.36E-11	2.58E-13
154	71-43-2	Benzene	7.67E-03	Yes	19	19	vapor	0.00E+00	0.00E+00		0.00E+00
155	71-55-6	Methyl chloroform (1,1,1-Trichloroethane)	7.67E-03	No		21	vapor			0.00E+00	0.00E+00
156	72-20-8	Endrin	2.32E-04	No		32	particle			1.54E-10	3.58E-14
157	72-43-5	Methoxychlor	1.16E-03	No		7	particle			9.59E-09	1.12E-11
158	72-54-8	4,4-DDD	2.32E-04	No		32	particle			1.54E-10	3.58E-14
159	72-55-9	4,4-DDE	2.32E-04	No		34	particle			8.82E-13	2.05E-16
160	74-83-9	Bromomethane (Methyl bromide)	7.67E-03	No		19	vapor			0.00E+00	0.00E+00
161	74-87-3	Chloromethane (Methyl chloride)	7.67E-03	No		20	vapor			0.00E+00	0.00E+00
162	74-97-5	Bromochloromethane	7.67E-03	No		17	vapor			0.00E+00	0.00E+00
163	74-95-3	Methylene bromide	3.49E-02	No		20	vapor			0.00E+00	0.00E+00
164	75-00-3	Chloroethane	7.67E-03	No		20	vapor			0.00E+00	0.00E+00
165	75-01-4	Vinyl chloride (1-Chloroethene)	3.49E-02	No		22	vapor			0.00E+00	0.00E+00
166	75-05-8	Acetonitrile	1.09E-02	Yes	13	13	vapor	1.89E-14	1.16E-12		1.89E-14
167	75-07-0	Acetaldehyde	3.49E-02	No		13	vapor			1.16E-12	4.06E-14
168	75-09-2	Dichloromethane (Methylene chloride)	7.67E-03	No		19	vapor			0.00E+00	0.00E+00
169	75-12-7	Formamide	3.49E-02	Yes	4	4	vapor	5.43E-10	1.56E-08		5.43E-10
170	75-15-0	Carbon disulfide	7.67E-03	No		20	vapor			0.00E+00	0.00E+00
171	75-21-8	Ethylene oxide (Oxirane)	7.67E-03	No		15	vapor			3.25E-15	2.50E-17
172	75-27-4	Bromodichloromethane	7.67E-03	No		18	vapor			0.00E+00	0.00E+00
173	75-34-3	1,1-Dichloroethane	7.67E-03	No		19	vapor			0.00E+00	0.00E+00
174	75-35-4	1,1-Dichloroethene (Vinylidene chloride)	7.67E-03	No		22	vapor			0.00E+00	0.00E+00
175	75-43-4	Dichlorofluoromethane	7.67E-03	No		20	vapor			0.00E+00	0.00E+00
176	75-45-6	Chlorodifluoromethane	7.67E-03	No		22	vapor			0.00E+00	0.00E+00
177	75-50-3	Trimethylamine	7.67E-03	No		14	vapor			6.47E-14	4.96E-16
178	75-52-5	Nitromethane	3.49E-02	No		13	vapor			1.16E-12	4.06E-14
179	75-55-8	2-Methylaziridine	3.49E-02	No		11	vapor			3.36E-11	1.17E-12
180	75-61-6	Dibromodifluoromethane	7.67E-03	No		22	vapor			0.00E+00	0.00E+00
181	75-63-8	Trifluorobromomethane	7.67E-03	No		26	vapor			0.00E+00	0.00E+00
182	75-65-0	2-Methyl-2-propanol	7.67E-03	No		11	vapor			3.36E-11	2.58E-13
183	75-69-4	Trichlorofluoromethane	7.67E-03	No		22	vapor			0.00E+00	0.00E+00
184	75-71-8	Dichlorodifluoromethane	7.67E-03	No		26	vapor			0.00E+00	0.00E+00
185	75-99-0	2,2-Dichloropropionic acid	3.49E-02	No		6	vapor			1.44E-08	5.01E-10
186	76-03-9	Trichloroacetic acid	7.67E-03	No		5	vapor			1.51E-08	1.16E-10
187	76-11-9	1,1,1,2-Tetrachloro-2,2-difluoroethane	3.49E-02	No		24	vapor			0.00E+00	0.00E+00
188	76-12-0	1,1,2,2-Tetrachloro-1,2-difluoroethane	3.49E-02	No		25	vapor			0.00E+00	0.00E+00
189	76-13-1	1,2,2-Trichloro-1,1,2-trifluoroethane (Freon 113)	7.67E-03	No		25	vapor			0.00E+00	0.00E+00
190	76-14-2	1,2-Dichloro-1,1,2,2-tetrafluoroethane	7.67E-03	No		26	vapor			0.00E+00	0.00E+00
191	76-15-3	Chloropentafluoroethane	7.67E-03	Yes	29	29	vapor	0.00E+00	0.00E+00		0.00E+00
192	76-44-8	Heptachlor	1.16E-04	Yes	15	15	vapor	0.00E+00	0.00E+00		0.00E+00
193	78-83-1	2-Methylpropyl alcohol (Isobutyl alcohol)	3.49E-02	No		11	vapor			3.36E-11	1.17E-12
194	78-87-5	1,2-Dichloropropane	7.67E-03	No		19	vapor			0.00E+00	0.00E+00
195	78-92-2	1-Methylpropyl alcohol (2-Butanol)	7.67E-03	No		11	vapor			3.36E-11	2.58E-13
196	78-93-3	Methyl ethyl ketone (MEK, 2-Butanone)	7.67E-03	No		13	vapor			1.16E-12	8.90E-15
197	79-00-5	1,1,2-Trichloroethane	7.67E-03	No		17	vapor			0.00E+00	0.00E+00
198	79-01-6	Trichloroethylene	7.67E-03	Yes	20	20	vapor	0.00E+00	0.00E+00		0.00E+00
199	79-09-4	Propionic acid	3.49E-02	No		6	vapor			8.87E-09	3.09E-10
200	79-10-7	2-Propenoic acid	3.49E-02	No		8	vapor			5.97E-09	2.08E-10
201	79-20-9	Methyl acetate	3.49E-02	No		14	vapor			6.47E-14	2.26E-15
202	79-34-5	1,1,2,2-Tetrachloroethane	7.67E-03	No		16	vapor			2.14E-18	1.64E-20

Adjusted Performance Factors

Group	PF
1	1.57E-08
2	3.09E-07
3	1.56E-09
4	1.56E-08
5	1.51E-08
6	1.44E-08
7	9.59E-09
8	5.97E-09
9	7.43E-10
10	1.77E-10
11	3.36E-11
12	1.98E-11
13	1.16E-12
14	6.47E-14
15	3.25E-15
16	2.14E-18
17	0.00E+00
18	0.00E+00
19	0.00E+00
20	0.00E+00
21	0.00E+00
22	0.00E+00
23	0.00E+00
24	0.00E+00
25	0.00E+00
26	0.00E+00
27	0.00E+00
28	0.00E+00
29	0.00E+00
30	8.76E-09
31	1.70E-09
32	1.54E-10
33	3.76E-11
34	8.82E-13
35	1.46E-16

Coplanar PCBs		LVP01 g/sec
31508-00-6	2,3',4,4',5-Pentachlorobiphenyl (PCB 118)	1.26E-21
32598-13-3	3,3',4,4'-Tetrachlorobiphenyl (TCB)	1.26E-21
32598-14-4	2,3,3',4,4'-Pentachlorobiphenyl (PCB 105)	1.26E-21
32774-16-6	3,3',4,4',5,5'-Hexachlorobiphenyl	1.26E-21
35065-29-3	2,2',3,4,4',5,5'-Heptachlorobiphenyl	1.26E-21
35065-30-6	2,2',3,3',4,4',5-Heptachlorobiphenyl	1.26E-21
38380-08-4	2,3,3',4,4',5-Hexachlorobiphenyl (PCB 157)	1.26E-21
39635-31-9	2,3,3',4,4',5,5'-Heptachlorobiphenyl	1.26E-21
52663-72-6	2,3',4,4',5,5'-Hexachlorobiphenyl	1.26E-21
57465-28-8	3,3',4,4',5-Pentachlorobiphenyl	1.26E-21
65510-44-3	2',3,4,4',5-Pentachlorobiphenyl	1.26E-21
69782-90-7	2,3,3',4,4',5'-Hexachlorobiphenyl	1.26E-21
70362-50-4	3,4,4',5-Tetrachlorobiphenyl	1.26E-21
74472-37-0	2,3,4,4',5-Pentachlorobiphenyl	1.26E-21
1336-36-3	Polychlorinated biphenyls (PCBs)	1.75E-18
1336-36-3	UnCorrected (for coplanar PCBs)	1.75E-18

Correction for Coplanar PCBs
0.99 as parent
0.01 as coplanar sum

CALCULATION SHEET

BY: E. Barlow
DATE: 05/13/03

PROJECT: WTP
JOB NO.: 24590
CALC NO.: 24590-WTP-MC-PRP-00005
SHEET REV.: A
SHEET NO.: 10

	A	B	C	D	E	F	G	H	I	J	K	L	M	N	O	P	Q	R	S	T	U	V	W
1	Table B-7 LVP01 - LAW Vessel Ventilation										Calc'd rate												
2			Feed Rate					LVP01 rate	Performance	Adjusted	LVP01												
3	CAS #	COPC	g/sec	In ACM	Group	Grouping	Phase	g/sec	Factor	PF	g/sec		Adjusted Performance Factors										
200	8001-35-2	Toxaphene	2.67E-03	Yes	10	10	particle	2.72E-14	1.62E-03		2.72E-14												
201	53-96-3	2-Acetylaminofluorene	3.49E-03	No		12	vapor			1.19E-12	4.05E-14												
202	53-70-3	Dibenz(a,h)anthracene	3.49E-03	No		15	vapor			3.29E-15	1.14E-15												
203	84-66-2	Diethyl phthalate	3.49E-03	Yes	8	8	vapor	1.17E-10	3.35E-09		1.17E-10												
204	84-74-2	Dibutyl phthalate	3.49E-03	Yes	31	31	particle	5.81E-11	1.73E-08		5.81E-11												
205	85-01-8	Phenanthrene	3.49E-03	No		13	vapor			1.16E-12	4.05E-14												
206	85-68-7	Butylbenzyl phthalate	3.49E-03	No		31	particle			1.73E-09	5.81E-11												
207	86-73-7	Fluorene	3.49E-03	No		14	particle			6.47E-14	2.26E-15												
208	87-68-3	Hexachlorobutadiene	3.67E-03	Yes	20	20	vapor	0.00E+00	0.00E+00		0.00E+00												
209	87-86-5	Pentachlorophenol	3.49E-03	Yes	8	8	vapor	5.81E-10	1.44E-08		5.81E-10												
210	88-06-2	2,4,6-Trichlorophenol	3.49E-03	No		10	vapor			1.77E-10	6.16E-12												
211	88-72-2	2-Nitrotoluene	3.67E-03	No		12	vapor			1.98E-11	1.57E-13												
212	88-75-5	2-Nitrophenol	3.49E-03	No		12	vapor			1.88E-11	6.56E-13												
213	88-85-7	2-sec-Butyl-4,6-dinitrophenol (Dinoseb)	3.49E-03	Yes	8	8	particle	5.04E-10	1.73E-08		5.04E-10												
214	88-89-1	Picric acid	3.49E-03	Yes	2	2	particle	1.07E-08	3.50E-07		1.07E-08												
215	91-20-3	Naphthalene	1.18E-03	Yes	16	16	vapor	0.00E+00	0.00E+00		0.00E+00												
216	91-22-5	Quinoline	3.49E-03	No		9	vapor			7.43E-10	2.59E-11												
217	91-58-7	2-Chloronaphthalene	3.49E-03	No		16	vapor			2.14E-16	7.45E-20												
218	92-52-4	1,1'-Biphenyl	3.49E-03	No		16	vapor			2.14E-16	7.45E-20												
219	92-93-3	4-Nitrobiphenyl	3.49E-03	No		10	particle			1.77E-10	6.16E-12												
220	93-72-1	Silvex (2,4,5-TP)	3.49E-03	No		2	particle			1.51E-08	5.26E-10												
221	93-76-5	2,4,5-T	3.49E-03	No		2	particle			1.51E-08	5.26E-10												
222	94-75-7	2,4-D acid esters (HSOC listed)	3.49E-03	No		8	vapor			1.44E-08	5.01E-10												
223	95-13-6	Indene	3.49E-03	No		10	vapor			0.00E+00	0.00E+00												
224	95-47-6	o-Xylene	3.67E-03	No		10	vapor			0.00E+00	0.00E+00												
225	95-48-7	o-Cresol (2-Methylphenol)	3.67E-03	No		9	vapor			7.43E-10	2.59E-12												
226	95-49-8	2-Chlorotoluene	3.49E-03	No		10	vapor			0.00E+00	0.00E+00												
227	95-50-1	o-Dichlorobenzene (1,2-Dichlorobenzene)	3.67E-03	No		16	vapor			0.00E+00	0.00E+00												
228	95-57-8	2-Chlorophenol	3.49E-03	No		11	vapor			3.36E-11	1.17E-13												
229	95-95-4	2,4,5-Trichlorophenol	3.49E-03	No		9	vapor			7.43E-10	2.59E-11												
230	96-22-0	3-Pentanone	3.67E-03	No		14	vapor			5.47E-14	4.94E-16												
231	96-69-5	Bis(1-methyl-6-hydroxy-5-methyl-phenyl)sulfide	3.49E-03	No		19	particle			0.00E+00	0.00E+00												
232	98-51-1	p-tert-Butyltoluene	3.49E-03	No		21	vapor			0.00E+00	0.00E+00												
233	98-82-8	Cumene	3.49E-03	No		10	vapor			0.00E+00	0.00E+00												
234	98-83-9	alpha-Methylstyrene	3.67E-03	No		19	vapor			0.00E+00	0.00E+00												
235	98-86-2	Acetophenone	3.49E-03	Yes	11	11	vapor	9.80E-15	2.83E-11		9.80E-15												
236	98-95-3	Nitrobenzene	3.49E-03	No		12	vapor			1.98E-11	6.60E-13												
240											3.48E-08												

CALCULATION SHEET

BY: E. Berrios
DATE: 05/21/03

PROJECT: WTP
JOB NO.: 24590
CALC NO.: 24590-WTP-M4C-FRP-00005
SHEET REV: A
SHEET NO : 91

	A	B	C	D	E	F	G	H	I	J	K	L	M	N
1	Table B-8 LVP26 - Abated LAW Melter Offgas System													
2				LMP08	SBS	WESP	LOP08	LVP01	LVP03	HEPA 1	HEPA 2	VOC Ox	NaOH Scr	LVP26
3	CAS #	COPC	Grouping	g/sec	DF	DF	g/sec	g/sec	g/sec	DF	DF	DF	DF	g/sec
4	100-00-5	p-Nitrochlorobenzene	10	2.55E-04	1	1	2.55E-04	6.16E-12	2.55E-04	1	1	20	1	1.27E-05
5	100-21-0	p-Phthalic acid	1	2.48E-02	1	1	2.48E-02	5.46E-10	2.48E-02	1	1	20	1	1.24E-03
6	100-25-4	1,4-Dinitrobenzene	8	2.28E-02	40	11	5.17E-05	5.01E-10	5.17E-05	2000	100	20	1	1.29E-11
7	100-41-4	Ethyl benzene	20	0.00E+00	1	1	0.00E+00	0.00E+00	0.00E+00	1	1	20	1	0.00E+00
8	100-42-5	Styrene	19	0.00E+00	1	1	0.00E+00	0.00E+00	0.00E+00	1	1	20	1	0.00E+00
9	10061-01-5	cis-1,3-Dichloropropene	19	0.00E+00	1	1	0.00E+00	0.00E+00	0.00E+00	1	1	20	1	0.00E+00
10	10061-02-6	trans-1,3-Dichloropropene	17	0.00E+00	1	1	0.00E+00	0.00E+00	0.00E+00	1	1	20	1	0.00E+00
11	101-55-3	4-Bromophenylphenyl ether	14	1.03E-07	1	1	1.03E-07	2.26E-15	1.03E-07	1	1	20	1	5.13E-09
12	101-84-8	Diphenyl ether	16	7.45E-13	1	1	7.45E-13	1.64E-20	7.45E-13	1	1	20	1	3.73E-14
13	106-35-4	3-Heptanone	14	2.26E-08	1	1	2.26E-08	4.96E-16	2.26E-08	1	1	20	1	1.13E-09
14	106-42-3	p-Xylene (Dimethyl benzene)	19	0.00E+00	1	1	0.00E+00	0.00E+00	0.00E+00	1	1	20	1	0.00E+00
15	106-46-7	1,4-Dichlorobenzene	18	0.00E+00	1	1	0.00E+00	0.00E+00	0.00E+00	1	1	20	1	0.00E+00
16	106-88-7	1,2-Epoxybutane	15	1.14E-09	1	1	1.14E-09	2.50E-17	1.14E-09	1	1	20	1	5.68E-11
17	106-93-4	Ethylene dibromide (Dibromethane)	16	1.02E-11	1	1	1.02E-11	2.24E-19	1.02E-11	1	1	20	1	5.08E-13
18	106-97-8	Butane	26	0.00E+00	1	1	0.00E+00	0.00E+00	0.00E+00	1	1	20	1	0.00E+00
19	106-99-0	1,3-Butadiene	23	0.00E+00	1	1	0.00E+00	0.00E+00	0.00E+00	1	1	20	1	0.00E+00
20	107-02-8	Acrolein	14	2.26E-08	1	1	2.26E-08	4.96E-16	2.26E-08	1	1	20	1	1.13E-09
21	107-05-1	3-Chloropropene (Allyl chloride)	20	0.00E+00	1	1	0.00E+00	0.00E+00	0.00E+00	1	1	20	1	0.00E+00
22	107-06-2	1,2-Dichloroethane (Ethylene chloride)	17	0.00E+00	1	1	0.00E+00	0.00E+00	0.00E+00	1	1	20	1	0.00E+00
23	107-12-0	Propionitrile	13	4.05E-07	1	1	4.05E-07	8.90E-15	4.05E-07	1	1	20	1	2.02E-08
24	107-13-1	Acrylonitrile	14	2.26E-08	1	1	2.26E-08	4.96E-16	2.26E-08	1	1	20	1	1.13E-09
25	107-18-6	2-Propene-1-ol	10	2.55E-04	1	1	2.55E-04	6.16E-12	2.55E-04	1	1	20	1	1.27E-05
26	107-31-3	Formic acid, methyl ester	15	5.16E-09	1	1	5.16E-09	1.14E-16	5.16E-09	1	1	20	1	2.58E-10
27	107-66-4	Dibutylphosphate	5	2.40E-02	40	11	5.45E-05	5.28E-10	5.45E-05	2000	100	20	1	1.36E-11
28	107-87-9	2-Pentanone	14	2.26E-08	1	1	2.26E-08	4.96E-16	2.26E-08	1	1	20	1	1.13E-09
29	108-03-2	1-Nitropropane	14	1.03E-07	1	1	1.03E-07	2.26E-15	1.03E-07	1	1	20	1	5.13E-09
30	108-05-4	Vinyl acetate	16	3.39E-12	1	1	3.39E-12	7.45E-20	3.39E-12	1	1	20	1	1.69E-13
31	108-10-1	Hexone (4-Methyl-2-pentanone or MIBK)	14	2.26E-08	1	1	2.26E-08	4.96E-16	2.26E-08	1	1	20	1	1.13E-09
32	108-20-3	Bis(isopropyl)ether	18	0.00E+00	1	1	0.00E+00	0.00E+00	0.00E+00	1	1	20	1	0.00E+00
33	108-38-3	m-Xylene (Dimethyl benzene)	19	0.00E+00	1	1	0.00E+00	0.00E+00	0.00E+00	1	1	20	1	0.00E+00
34	108-39-4	m-Cresol	9	2.59E-04	1	1	2.59E-04	5.70E-12	2.59E-04	1	1	20	1	1.30E-05
35	108-87-2	Methylcyclohexane	25	0.00E+00	1	1	0.00E+00	0.00E+00	0.00E+00	1	1	20	1	0.00E+00
36	108-88-3	Toluene	19	0.00E+00	1	1	0.00E+00	0.00E+00	0.00E+00	1	1	20	1	0.00E+00
37	108-90-7	Chlorobenzene	19	0.00E+00	1	1	0.00E+00	0.00E+00	0.00E+00	1	1	20	1	0.00E+00
38	108-93-0	Cyclohexanol	10	5.60E-05	1	1	5.60E-05	1.36E-12	5.60E-05	1	1	20	1	2.80E-06
39	108-94-1	Cyclohexanone	11	1.17E-05	1	1	1.17E-05	2.58E-13	1.17E-05	1	1	20	1	5.87E-07
40	108-95-2	Phenol	8	9.42E-03	1	1	9.42E-03	2.07E-10	9.42E-03	1	1	20	1	4.71E-04
41	109-66-0	n-Pentane	26	0.00E+00	1	1	0.00E+00	0.00E+00	0.00E+00	1	1	20	1	0.00E+00
42	109-99-9	Tetrahydrofuran	13	8.58E-07	1	1	8.58E-07	1.89E-14	8.58E-07	1	1	20	1	4.29E-08
43	110-12-3	5-Methyl-2-hexanone	15	1.14E-09	1	1	1.14E-09	2.50E-17	1.14E-09	1	1	20	1	5.68E-11
44	110-43-0	2-Heptanone	15	1.14E-09	1	1	1.14E-09	2.50E-17	1.14E-09	1	1	20	1	5.68E-11
45	110-54-3	n-Hexane	27	0.00E+00	1	1	0.00E+00	0.00E+00	0.00E+00	1	1	20	1	0.00E+00
46	110-62-3	n-Valeraldehyde	15	5.16E-09	1	1	5.16E-09	1.14E-16	5.16E-09	1	1	20	1	2.58E-10
47	110-82-7	Cyclohexane	24	0.00E+00	1	1	0.00E+00	0.00E+00	0.00E+00	1	1	20	1	0.00E+00
48	110-83-8	Cyclohexene	22	0.00E+00	1	1	0.00E+00	0.00E+00	0.00E+00	1	1	20	1	0.00E+00
49	110-86-1	Pyridine	11	5.33E-05	1	1	5.33E-05	1.17E-12	5.33E-05	1	1	20	1	2.67E-06
50	111-65-9	n-Octane	28	0.00E+00	1	1	0.00E+00	0.00E+00	0.00E+00	1	1	20	1	0.00E+00
51	111-76-2	Ethylene glycol monobutyl ether	9	1.18E-03	1	1	1.18E-03	2.59E-11	1.18E-03	1	1	20	1	5.89E-05
52	111-84-2	n-Nonane	28	0.00E+00	1	1	0.00E+00	0.00E+00	0.00E+00	1	1	20	1	0.00E+00
53	117-81-7	Bis(2-ethylhexyl)phthalate (DEHP)	30	9.49E-03	40	11	2.16E-05	3.06E-10	2.16E-05	2000	100	20	1	5.39E-12
54	117-84-0	n-Dioctyl phthalate	32	1.84E-04	40	11	4.18E-07	5.37E-12	4.18E-07	2000	100	20	1	1.05E-13
55	118-74-1	Hexachlorobenzene	18	0.00E+00	1	1	0.00E+00	0.00E+00	0.00E+00	1	1	20	1	0.00E+00
56	120-12-7	Anthracene	13	8.55E-07	1	1	8.55E-07	1.88E-14	8.55E-07	1	1	20	1	4.27E-08
57	120-82-1	1,2,4-Trichlorobenzene	17	0.00E+00	1	1	0.00E+00	0.00E+00	0.00E+00	1	1	20	1	0.00E+00
58	120-83-2	2,4-Dichlorophenol	10	2.55E-04	1	1	2.55E-04	6.16E-12	2.55E-04	1	1	20	1	1.27E-05
59	121-44-8	Triethylamine	15	1.14E-09	1	1	1.14E-09	2.50E-17	1.14E-09	1	1	20	1	5.68E-11
60	121-69-7	Dimethylaniline	13	4.05E-07	1	1	4.05E-07	8.90E-15	4.05E-07	1	1	20	1	2.02E-08
61	122-39-4	N,N-Diphenylamine	10	8.77E-05	1	1	8.77E-05	1.93E-12	8.77E-05	1	1	20	1	4.39E-06
62	123-19-3	4-Heptanone	13	4.05E-07	1	1	4.05E-07	8.90E-15	4.05E-07	1	1	20	1	2.02E-08
63	123-38-6	n-Propionaldehyde	14	2.26E-08	1	1	2.26E-08	4.96E-16	2.26E-08	1	1	20	1	1.13E-09
64	123-51-3	3-Methyl-1-butanol	12	6.90E-06	1	1	6.90E-06	1.52E-13	6.90E-06	1	1	20	1	3.45E-07
65	123-86-4	Acetic acid n-butyl ester	16	3.39E-12	1	1	3.39E-12	7.45E-20	3.39E-12	1	1	20	1	1.69E-13
66	123-91-1	1,4-Dioxane	10	1.53E-04	1	1	1.53E-04	3.70E-12	1.53E-04	1	1	20	1	7.84E-06
67	126-73-8	Tributyl phosphate	7	1.52E-02	1	1	1.52E-02	3.35E-10	1.52E-02	1	1	20	1	7.60E-04
68	126-98-7	2-Methyl-2-propenenitrile (Methacrylonitrile)	16	7.45E-13	1	1	7.45E-13	1.64E-20	7.45E-13	1	1	20	1	3.73E-14
69	127-18-4	Perchloroethylene (tetrachloroethylene)	21	0.00E+00	1	1	0.00E+00	0.00E+00	0.00E+00	1	1	20	1	0.00E+00
70	127-19-5	N,N-Dimethylacetamide	5	5.28E-03	1	1	5.28E-03	1.16E-10	5.28E-03	1	1	20	1	2.64E-04
71	128-37-0	2,6-Bis(tert-butyl)-4-methylphenol	32	1.84E-04	1	1	1.84E-04	5.37E-12	1.84E-04	1	1	20	1	9.20E-06
72	129-00-0	Pyrene	33	4.53E-05	40	11	1.03E-07	1.46E-12	1.03E-07	2000	100	20	1	2.58E-14
73	1321-64-8	Pentachloronaphthalene	14	1.03E-07	40	11	2.33E-10	2.26E-15	2.33E-10	2000	100	20	1	5.82E-17
74	1321-65-9	Trichloronaphthalene	15	5.16E-09	1	1	5.16E-09	1.14E-16	5.16E-09	1	1	20	1	2.58E-10
75	132-64-9	Dibenzofuran	15	5.16E-09	1	1	5.16E-09	1.14E-16	5.16E-09	1	1	20	1	2.58E-10
76	1335-87-1	Hexachloronaphthalene	14	1.03E-07	40	11	2.33E-10	2.26E-15	2.33E-10	2000	100	20	1	5.82E-17
77	1335-88-2	Tetrachloronaphthalene	16	5.16E-09	40	11	1.17E-11	1.14E-16	1.17E-11	2000	100	20	1	2.93E-18
78	1336-36-3	Polychlorinated biphenyls (PCBs)	35	5.42E-11	40	11	1.23E-13	1.74E-18	1.23E-13	2000	100	20	1	3.08E-20
79	141-78-6	Acetic acid ethyl ester (Ethyl acetate)	14	1.03E-07	1	1	1.03E-07	2.26E-15	1.03E-07	1	1	20	1	5.13E-09
80	141-79-7	4-Methyl-3-penten-2-one	13	1.84E-06	1	1	1.84E-06	4.05E-14	1.84E-06	1	1	20	1	9.20E-08
81	142-82-5	n-Heptane	27	0.00E+00	1	1	0.00E+00	0.00E+00	0.00E+00	1	1	20	1	0.00E+00
82	144-62-7	Oxalic acid	3	2.48E-03	1	1	2.48E-03	5.45E-11	2.48E-03	1	1	20	1	1.24E-04
83	156-60-5	trans-1,2-Dichloroethylene	20	0.00E+00	1	1	0.00E+00	0.00E+00	0.00E+00	1	1	20	1	0.00E+00
84	1582-09-8	Trifluralin	14	1.03E-07	40	11	2.33E-10	2.26E-15	2.33E-10	2000	100	20	1	5.82E-17
85	1634-04-4	Methyl tert-butyl ether	16	7.45E-13	1	1	7.45E-13	1.64E-20	7.45E-13	1	1	20	1	3.73E-14
86	1836-75-5	Nitrofen	30	9.49E-03	40	11	2.16E-05	3.06E-10	2.16E-05	2000	100	20	1	5.39E-12
87	189-55-9	Dibenzo[a,i]pyrene	5	2.40E-02	40	11	5.45E-05	5.28E-10	5.45E-05	2000	100	20	1	1.36E-11
88	189-64-0	Dibenzo[a,h]pyrene	5	2.40E-02	40	11	5.45E-05	5.28E-10	5.45E-05	2000	100	20	1	1.36E-11
89	191-24-2	Benzo(g,h,i)perylene	30	9.49E-03	40	11	2.16E-05	3.06E-10	2.16E-05	2000	100	20	1	5.39E-12
90	191-30-0	Dibenzo[a,l]pyrene	5	2.40E-02	40	11	5.45E-05	5.28E-10	5.45E-05	2000	100	20	1	1.36E-11
91	192-65-4	Dibenzo[a,e]pyrene	5	2.40E-02	40	11	5.45E-05	5.28E-10	5.45E-05	2000	100	20	1	1.36E-11
92	193-39-5	Indeno(1,2,3-cd)pyrene	30	9.49E-03	40	11	2.16E-05	3.06E-10	2.16E-05	2000	100	20	1	5.39E-12
93	205-82-3	Benzo(j)fluoranthene	7	1.52E-02	40	11	3.46E-05	3.35E-10	3.46E-05	2000	100	20	1	8.64E-12
94	205-99-2	Benzo(b)fluoranthene	30	9.49E-03	40	11	2.16E-05	3.06E-10	2.16E-05	2000	100	20	1	5.39E-12
95	206-44-0	Fluoranthene	33	4.07E-05	40	11	9.26E-08	1.31E-12	9.26E-08	2000	100	20	1	2.31E-14
96	207-08-9	Benzo(k)fluoranthene	30	9.49E-03	40	11	2.16E-05	3.06E-10	2.16E-05	2000	100	20	1	5.39E-12
97	208-96-8	Acenaphthylene	14	1.03E-07	1	1	1.03E-07	2.26E-15	1.03E-07	1	1	20	1	5.13E-09
98	218-01-9	Chrysene	32	2.40E-04	40	11	5.46E-07	7.73E-12	5.46E-07	2000	100	20	1	1.36E-13
99	2234-13-1	Octachloronaphthalene	14	1.03E-07	40	11	2.33E-10	2.26E-15	2.33E-10	2000	100	20	1	5.82E-17
100	224-42-0	Dibenz[a,j]acridine	4	2.47E-02	40	11	5.61E-05	5.43E-10	5.61E-05	2000	100	20	1	1.40E-11
101	226-36-8	Dibenz[a,h]acridine	4	2.47E-02	40	11	5.61E-05	5.43E-10	5.61E-05	2000	100	20	1	1.40E-11
102	2385-85-5	Mirex	17	0.00E+00	1	1	0.00E+00	0.00E+00	0.00E+00	1	1	20	1	0.00E+00
103	25551-13-7	Trimethyl benzene	19	0.00E+00	1	1	0.00E+00	0.00E+00	0.00E+00	1	1	20	1	0.00E+00
104	26140-60-3	Terphenyls	34	9.55E-07	40	11	2.17E-09	3.07E-14	2.17E-09	2000	100	20	1	5.42E-16
105	27154-33-2	Trichlorofluoroethane	23	0.00E+00	1	1	0.00E+00	0.00E+00	0.00E+00	1	1	20	1	0.00E+00
106	287-92-3	Cyclopentane	24	0.00E+00	1	1	0.00E+00	0.00E+00	0.00E+00	1	1	20	1	0.00E+00
107	309-00-2	Aldrin	34	1.18E-08	40	11	2.68E-11	3.79E-16	2.68E-11	2000	100	20	1	6.69E-18
108	319-84-6	Hexachlorocyclohexane (Lindane) Alpha BHC	30	1.36E-07	1	1	1.36E-07	4.37E-15	1.36E-07	1	1	20	1	6.79E-09
109	319-85-7	Hexachlorocyclohexane (Lindane) Beta BHC	30	3.11E-05	40	11	7.06E-08	1.00E-12	7.06E-08	2000	100	20	1	1.77E-14
110	319-86-8	Delta-BHC	30	3.16E-05	40	11	7.19E-08	1.02E-12	7.19E-08	2000	100	20	1	1.80E-14
111	3697-24-3	5-Methylchrysene	32	1.84E-04	40	11	4.18E-07	5.37E-12	4.18E-07	2000	100	20	1	1.05E-13
112	3825-26-1	Ammonium perfluorooctanoate	14	1.03E-07	40	11	2.33E-10	2.26E-15	2.33E-10	2000	100	20	1	5.82E-17
113	4170-30-3	2-Butenaldehyde (2-Butenal or Crotonaldehyde)	11	1.16E-05	1	1	1.16E-05	2.55E-13	1.16E-05	1	1	20	1	5.80E-07
114	465-73-6	Isodrin	35	1.05E-12	1	1	1.05E-12	3.38E-20	1.05E-12	1	1	20	1	5.25E-14
115	50-00-0	Formaldehyde	8	2.46E-03	1	1	2.46E-03	6.81E-11	2.46E-03	1	1	20	1	1.23E-04
116	50-29-3	4,4-DDT	33	2.72E-07	40	11	6.17E-10	8.74E-15	6.17E-10	2000	100	20	1	1.54E-16
117	50-32-8	Benzo(a)pyrene	30	1.22E-04	40	11	2.78E-07	3.94E-12	2.78E-07	2000	100	20	1	6.95E-14
118	53-70-3	Dibenzo(a,h)anthracene	7	2.53E-05	40	11	5.76E-08	5.58E-13	5.76E-08	2000	100	20	1	1.44E-14
119	540-59-0	1,2-Dichloroethylene	19	0.00E+00	1	1	0.00E+00	0.00E+00	0.00E+00	1	1	20	1	0.00E+00
120	540-84-1	2,2,4-Trimethylpentane	28	0.00E+00	1	1	0.00E+00	0.00E+00	0.00E+00	1	1	20	1	0.00E+00
121	541-73-1	1,3-Dichlorobenzene	19	0.00E+00	1	1	0.00E+00	0.00E+00	0.00E+00	1	1	20	1	0.00E+00
122	56-23-5	Carbon tetrachloride	22	0.00E+00	1	1	0.00E+00	0.00E+00	0.00E+00	1	1	20	1	0.00E+00
123	563-80-4	3-Methyl-2-butanone	14	2.26E-08	1	1	2.26E-08	4.96E-16	2.26E-08	1	1	20	1	1.13E-09
124	56-49-5	3-Methylcholanthrene	25	0.00E+00	40	11	0.00E+00	0.00E+00	0.00E+00	2000	100	20	1	0.00E+00
125	56-55-3	Benzo(a)anthracene	33	4.07E-05	40	11	9.26E-08	1.31E-12	9.26E-08	2000	100	20	1	2.31E-14
126	57-14-7	1,1-Dimethylhydrazine	12	3.14E-05	1	1	3.14E-05	6.90E-13	3.14E-05	1	1	20	1	1.57E-06
127	58-89-9	gamma-BHC (Lindane)	32	4.92E-07	40	11	1.12E-09	1.58E-14	1.12E-09	2000	100	20	1	2.79E-16
128	58-90-2	2,3,4,6-Tetrachlorophenol	11	6.24E-05	1	1	6.24E-05	1.37E-12	6.24E-05	1	1	20	1	3.12E-06
129	591-78-6	2-Hexanone	14	2.26E-08	1	1	2.26E-08	4.96E-16	2.26E-08	1	1	20	1	1.13E-09
130	59-50-7	4-Chloro-3-methylphenol	32	1.84E-04	40	11	4.18E-07	5.37E-12	4.18E-07	2000	100	20	1	1.05E-13
131	59-89-2	N-Nitrosomorpholine	6	2.28E-02	1	1	2.28E-02	5.01E-10	2.28E-02	1	1	20	1	1.14E-03
132	602-87-9	5-Nitroacenaphthene	9	1.18E-03	40	11	2.68E-06	2.59E-11	2.68E-06	2000	100	20	1	6.69E-13
133	60-29-7	Ethyl ether	17	0.00E+00	1	1	0.00E+00	0.00E+00	0.00E+00	1	1	20	1	0.00E+00
134	603-34-9	Triphenylamine	32	1.65E-04	1	1	1.65E-04	3.62E-12	1.65E-04	1	1	20	1	8.23E-06

BY: E. Berrios
DATE: 05/21/03

PROJECT: WTP
JOB NO.: 24590
CALC NO.: 24590-WTP-M4C-FRP-00005
SHEET REV: A
SHEET NO.: 92

	A	B	C	D	E	F	G	H	I	J	K	L	M	N
1	Table B-8 LVP28 - Abated LAW Melter Offgas System													
2				LMP06	SBS	WESP	LOP06	LVP01	LVP03	HEPA 1	HEPA 2	VOC Ox	NaOH Scr	LVP28
3	CAS #	COPC	Grouping	g/sec	DF	DF	g/sec	g/sec	g/sec	DF	DF	DF	DF	g/sec
135	60-34-4	Methylhydrazine	10	5.60E-05	1	1	5.60E-05	1.36E-12	5.60E-05	1	1	20	1	2.80E-06
136	60-35-5	Acetamide	5	5.28E-03	1	1	5.28E-03	1.16E-10	5.28E-03	1	1	20	1	2.64E-04
137	60-57-1	Dieldrin	33	2.41E-07	40	11	5.47E-10	7.76E-15	5.47E-10	2000	100	20	1	1.37E-16
138	621-64-7	Di-n-Propylnitrosamine (N-Nitroso-di-n-propylamine)	10	2.55E-04	1	1	2.55E-04	6.16E-12	2.55E-04	1	1	20	1	1.27E-05
139	624-83-9	Methyl isocyanate	17	0.00E+00	1	1	0.00E+00	0.00E+00	0.00E+00	1	1	20	1	0.00E+00
140	627-13-4	Nitric acid, propyl ester	17	0.00E+00	1	1	0.00E+00	0.00E+00	0.00E+00	1	1	20	1	0.00E+00
141	62-75-9	N-Nitroso-N,N-dimethylamine (Dimethylnitrosamine)	9	2.20E-03	1	1	2.20E-03	4.84E-11	2.20E-03	1	1	20	1	1.10E-04
142	630-20-6	1,1,1,2-Tetrachloroethane	18	0.00E+00	1	1	0.00E+00	0.00E+00	0.00E+00	1	1	20	1	0.00E+00
143	64-17-5	Ethyl alcohol	10	5.60E-05	1	1	5.60E-05	1.36E-12	5.60E-05	1	1	20	1	2.80E-06
144	64-18-6	Formic acid	7	1.52E-02	1	1	1.52E-02	3.35E-10	1.52E-02	1	1	20	1	7.60E-04
145	64-19-7	Acetic acid	6	2.28E-02	1	1	2.28E-02	5.01E-10	2.28E-02	1	1	20	1	1.14E-03
146	67-56-1	Methyl alcohol (Methanol)	10	5.60E-05	1	1	5.60E-05	1.36E-12	5.60E-05	1	1	20	1	2.80E-06
147	67-63-0	2-Propyl alcohol (Isopropanol; Propan-2-01)	11	1.17E-05	1	1	1.17E-05	2.58E-13	1.17E-05	1	1	20	1	5.87E-07
148	67-64-1	2-Propanone (Acetone)	13	2.21E-06	1	1	2.21E-06	4.86E-14	2.21E-06	1	1	20	1	1.10E-07
149	67-66-3	Chloroform	19	0.00E+00	1	1	0.00E+00	0.00E+00	0.00E+00	1	1	20	1	0.00E+00
150	67-72-1	Hexachloroethane	19	0.00E+00	1	1	0.00E+00	0.00E+00	0.00E+00	1	1	20	1	0.00E+00
151	684-16-2	Hexafluoroacetone	19	0.00E+00	1	1	0.00E+00	0.00E+00	0.00E+00	1	1	20	1	0.00E+00
152	71-23-8	n-Propyl alcohol	11	1.17E-05	1	1	1.17E-05	2.58E-13	1.17E-05	1	1	20	1	5.87E-07
153	71-36-3	n-Butyl alcohol	11	1.17E-05	1	1	1.17E-05	2.58E-13	1.17E-05	1	1	20	1	5.87E-07
154	71-43-2	Benzene	19	0.00E+00	1	1	0.00E+00	0.00E+00	0.00E+00	1	1	20	1	0.00E+00
155	71-55-6	Methyl chloroform (1,1,1-Trichloroethane)	21	0.00E+00	1	1	0.00E+00	0.00E+00	0.00E+00	1	1	20	1	0.00E+00
156	72-20-8	Endrin	32	1.23E-08	40	11	2.79E-09	3.58E-14	2.79E-09	2000	100	20	1	6.97E-16
157	72-43-5	Methoxychlor	7	5.07E-04	40	11	1.15E-06	1.12E-11	1.15E-06	2000	100	20	1	2.88E-13
158	72-54-8	4,4-DDD	32	1.23E-08	40	11	2.79E-09	3.58E-14	2.79E-09	2000	100	20	1	6.97E-16
159	72-55-9	4,4-DDE	34	6.36E-09	40	11	1.45E-11	2.05E-18	1.45E-11	2000	100	20	1	3.62E-18
160	74-83-9	Bromomethane (Methyl bromide)	19	0.00E+00	1	1	0.00E+00	0.00E+00	0.00E+00	1	1	20	1	0.00E+00
161	74-87-3	Chloromethane (Methyl chloride)	20	0.00E+00	1	1	0.00E+00	0.00E+00	0.00E+00	1	1	20	1	0.00E+00
162	74-97-5	Bromochloromethane	17	0.00E+00	1	1	0.00E+00	0.00E+00	0.00E+00	1	1	20	1	0.00E+00
163	74-99-7	Methylacetylene	20	0.00E+00	1	1	0.00E+00	0.00E+00	0.00E+00	1	1	20	1	0.00E+00
164	75-00-3	Chloroethane	20	0.00E+00	1	1	0.00E+00	0.00E+00	0.00E+00	1	1	20	1	0.00E+00
165	75-01-4	Vinyl chloride (1-Chloroethene)	22	0.00E+00	1	1	0.00E+00	0.00E+00	0.00E+00	1	1	20	1	0.00E+00
166	75-05-8	Acetonitrile	13	8.85E-07	1	1	8.85E-07	1.95E-14	8.85E-07	1	1	20	1	4.42E-08
167	75-07-0	Acetaldehyde	13	1.84E-06	1	1	1.84E-06	4.05E-14	1.84E-06	1	1	20	1	9.20E-08
168	75-09-2	Dichloromethane (Methylene chloride)	19	0.00E+00	1	1	0.00E+00	0.00E+00	0.00E+00	1	1	20	1	0.00E+00
169	75-12-7	Formamide	4	2.47E-02	1	1	2.47E-02	5.43E-10	2.47E-02	1	1	20	1	1.24E-03
170	75-15-0	Carbon disulfide	20	0.00E+00	1	1	0.00E+00	0.00E+00	0.00E+00	1	1	20	1	0.00E+00
171	75-21-8	Ethylene oxide (Oxirane)	15	1.14E-09	1	1	1.14E-09	2.50E-17	1.14E-09	1	1	20	1	5.68E-11
172	75-27-4	Bromodichloromethane	18	0.00E+00	1	1	0.00E+00	0.00E+00	0.00E+00	1	1	20	1	0.00E+00
173	75-34-3	1,1-Dichloroethane	19	0.00E+00	1	1	0.00E+00	0.00E+00	0.00E+00	1	1	20	1	0.00E+00
174	75-35-4	1,1-Dichloroethene (Vinylidene chloride)	22	0.00E+00	1	1	0.00E+00	0.00E+00	0.00E+00	1	1	20	1	0.00E+00
175	75-43-4	Dichlorofluoromethane	20	0.00E+00	1	1	0.00E+00	0.00E+00	0.00E+00	1	1	20	1	0.00E+00
176	75-45-6	Chlorodifluoromethane	22	0.00E+00	1	1	0.00E+00	0.00E+00	0.00E+00	1	1	20	1	0.00E+00
177	75-50-3	Trimethylamine	14	2.26E-08	1	1	2.26E-08	4.96E-16	2.26E-08	1	1	20	1	1.13E-09
178	75-52-5	Nitromethane	13	1.84E-06	1	1	1.84E-06	4.05E-14	1.84E-06	1	1	20	1	9.20E-08
179	75-55-8	2-Methylaziridine	11	5.33E-05	1	1	5.33E-05	1.17E-12	5.33E-05	1	1	20	1	2.67E-06
180	75-61-6	Difluorodibromomethane	22	0.00E+00	1	1	0.00E+00	0.00E+00	0.00E+00	1	1	20	1	0.00E+00
181	75-63-8	Trifluorobromomethane	25	0.00E+00	1	1	0.00E+00	0.00E+00	0.00E+00	1	1	20	1	0.00E+00
182	75-65-0	2-Methyl-2-propanol	11	1.17E-05	1	1	1.17E-05	2.58E-13	1.17E-05	1	1	20	1	5.87E-07
183	75-69-4	Trichlorofluoromethane	23	0.00E+00	1	1	0.00E+00	0.00E+00	0.00E+00	1	1	20	1	0.00E+00
184	75-71-8	Dichlorodifluoromethane	25	0.00E+00	1	1	0.00E+00	0.00E+00	0.00E+00	1	1	20	1	0.00E+00
185	75-99-0	2,2-Dichloropropionic acid	8	2.28E-02	1	1	2.28E-02	5.01E-10	2.28E-02	1	1	20	1	1.14E-03
186	76-03-9	Trichloroacetic acid	5	5.28E-03	1	1	5.28E-03	1.16E-10	5.28E-03	1	1	20	1	2.64E-04
187	76-11-9	1,1,1,2-Tetrachloro-2,2-difluoroethane	24	0.00E+00	1	1	0.00E+00	0.00E+00	0.00E+00	1	1	20	1	0.00E+00
188	76-12-0	1,1,2,2-Tetrachloro-1,2-difluoroethane	23	0.00E+00	1	1	0.00E+00	0.00E+00	0.00E+00	1	1	20	1	0.00E+00
189	76-13-1	1,2,2-Trichloro-1,1,2-trifluoroethane (Freon 113)	25	0.00E+00	1	1	0.00E+00	0.00E+00	0.00E+00	1	1	20	1	0.00E+00
190	76-14-2	1,2-Dichloro-1,1,2,2-tetrafluoroethane	28	0.00E+00	1	1	0.00E+00	0.00E+00	0.00E+00	1	1	20	1	0.00E+00
191	76-15-3	Chloropentafluoroethane	29	0.00E+00	1	1	0.00E+00	0.00E+00	0.00E+00	1	1	20	1	0.00E+00
192	76-44-8	Heptachlor	16	0.00E+00	1	1	0.00E+00	0.00E+00	0.00E+00	1	1	20	1	0.00E+00
193	78-83-1	2-Methylpropyl alcohol (Isobutyl alcohol)	11	5.33E-05	1	1	5.33E-05	1.17E-12	5.33E-05	1	1	20	1	2.67E-06
194	78-87-5	1,2-Dichloropropane	19	0.00E+00	1	1	0.00E+00	0.00E+00	0.00E+00	1	1	20	1	0.00E+00
195	78-92-2	1-Methylpropyl alcohol (2-Butanol)	11	1.17E-05	1	1	1.17E-05	2.58E-13	1.17E-05	1	1	20	1	5.87E-07
196	78-93-3	Methyl ethyl ketone (MEK, 2-Butanone)	13	4.05E-07	1	1	4.05E-07	8.90E-15	4.05E-07	1	1	20	1	2.02E-08
197	79-00-5	1,1,2-Trichloroethane	17	0.00E+00	1	1	0.00E+00	0.00E+00	0.00E+00	1	1	20	1	0.00E+00
198	79-01-6	Trichloroethylene	20	0.00E+00	1	1	0.00E+00	0.00E+00	0.00E+00	1	1	20	1	0.00E+00
199	79-09-4	Propionic acid	8	1.12E-02	1	1	1.12E-02	3.09E-10	1.12E-02	1	1	20	1	5.58E-04
200	79-10-7	2-Propenoic acid	8	1.12E-02	1	1	1.12E-02	3.09E-10	1.12E-02	1	1	20	1	5.58E-04
201	79-20-9	Methyl acetate	14	1.03E-07	1	1	1.03E-07	2.26E-15	1.03E-07	1	1	20	1	5.13E-09
202	79-34-5	1,1,2,2-Tetrachloroethane	16	7.45E-13	1	1	7.45E-13	1.64E-20	7.45E-13	1	1	20	1	3.73E-14
203	8001-35-2	Toxaphene	10	8.46E-07	40	11	1.92E-09	2.72E-14	1.92E-09	2000	100	20	1	4.81E-16
204	82-68-8	Pentachloronitrobenzene (PCBN or quintobenzene)	13	1.84E-06	1	1	1.84E-06	4.05E-14	1.84E-06	1	1	20	1	9.20E-08
205	83-32-9	Acenaphthene	15	5.16E-09	1	1	5.16E-09	1.14E-16	5.16E-09	1	1	20	1	2.58E-10
206	84-66-2	Diethyl phthalate	8	5.30E-03	1	1	5.30E-03	1.17E-10	5.30E-03	1	1	20	1	2.65E-04
207	84-74-2	Dibutyl phthalate	31	1.84E-03	40	11	4.17E-06	5.91E-11	4.17E-06	2000	100	20	1	1.04E-12
208	85-01-8	Phenanthrene	13	1.84E-06	1	1	1.84E-06	4.05E-14	1.84E-06	1	1	20	1	9.20E-08
209	85-68-7	Butylbenzyl phthalate	31	1.84E-03	40	11	4.17E-06	5.91E-11	4.17E-06	2000	100	20	1	1.04E-12
210	86-73-7	Fluorene	14	1.03E-07	40	11	2.33E-10	2.26E-15	2.33E-10	2000	100	20	1	5.82E-17
211	87-68-3	Hexachlorobutadiene	20	0.00E+00	1	1	0.00E+00	0.00E+00	0.00E+00	1	1	20	1	0.00E+00
212	87-86-5	Pentachlorophenol	6	2.28E-02	1	1	2.28E-02	5.01E-10	2.28E-02	1	1	20	1	1.14E-03
213	88-06-2	2,4,6-Trichlorophenol	10	2.55E-04	1	1	2.55E-04	6.16E-12	2.55E-04	1	1	20	1	1.27E-05
214	88-72-2	2-Nitrotoluene	12	6.90E-06	1	1	6.90E-06	1.52E-13	6.90E-06	1	1	20	1	3.45E-07
215	88-75-5	2-Nitrophenol	12	3.14E-05	1	1	3.14E-05	6.90E-13	3.14E-05	1	1	20	1	1.57E-06
216	88-85-7	2-sec-Butyl-4,6-dinitrophenol (Dinoseb)	8	1.88E-02	40	11	4.26E-05	6.04E-10	4.26E-05	2000	100	20	1	1.07E-11
217	88-89-1	Picric acid	2	3.31E-01	40	11	7.52E-04	1.07E-08	7.52E-04	2000	100	20	1	1.88E-10
218	91-20-3	Naphthalene	16	0.00E+00	1	1	0.00E+00	0.00E+00	0.00E+00	1	1	20	1	0.00E+00
219	91-22-5	Quinoline	9	1.18E-03	1	1	1.18E-03	2.59E-11	1.18E-03	1	1	20	1	5.89E-05
220	91-58-7	2-Chloronaphthalene	16	3.39E-12	1	1	3.39E-12	7.45E-20	3.39E-12	1	1	20	1	1.69E-13
221	92-52-4	1,1'-Biphenyl	16	3.39E-12	1	1	3.39E-12	7.45E-20	3.39E-12	1	1	20	1	1.69E-13
222	92-93-3	4-Nitrobiphenyl	10	2.55E-04	40	11	5.79E-07	6.16E-12	5.79E-07	2000	100	20	1	1.45E-13
223	93-72-1	Silvex (2,4,5-TP)	5	2.40E-02	40	11	5.45E-05	5.28E-10	5.45E-05	2000	100	20	1	1.36E-11
224	93-76-5	2,4,5-T	5	2.40E-02	40	11	5.45E-05	5.28E-10	5.45E-05	2000	100	20	1	1.36E-11
225	94-75-7	2,4-D and esters (160C typed)	8	2.28E-02	1	1	2.28E-02	5.01E-10	2.28E-02	1	1	20	1	1.14E-03
226	95-13-6	Indene	18	0.00E+00	1	1	0.00E+00	0.00E+00	0.00E+00	1	1	20	1	0.00E+00
227	95-47-6	o-Xylene	19	0.00E+00	1	1	0.00E+00	0.00E+00	0.00E+00	1	1	20	1	0.00E+00
228	95-48-7	o-Cresol (2-Methylphenol)	9	2.59E-04	1	1	2.59E-04	5.70E-12	2.59E-04	1	1	20	1	1.30E-05
229	95-49-8	2-Chlorotoluene	19	0.00E+00	1	1	0.00E+00	0.00E+00	0.00E+00	1	1	20	1	0.00E+00
230	95-50-1	o-Dichlorobenzene (1,2-Dichlorobenzene)	18	0.00E+00	1	1	0.00E+00	0.00E+00	0.00E+00	1	1	20	1	0.00E+00
231	95-57-8	2-Chlorophenol	11	5.33E-05	1	1	5.33E-05	1.17E-12	5.33E-05	1	1	20	1	2.67E-06
232	95-95-4	2,4,5-Trichlorophenol	9	1.18E-03	1	1	1.18E-03	2.59E-11	1.18E-03	1	1	20	1	5.89E-05
233	96-22-0	3-Pentanone	14	2.26E-08	1	1	2.26E-08	4.96E-16	2.26E-08	1	1	20	1	1.13E-09
234	96-69-5	Bis(3-tert-butyl-4-hydroxy-6-methyl-phenyl)sulfide	19	0.00E+00	40	11	0.00E+00	0.00E+00	0.00E+00	2000	100	20	1	0.00E+00
235	98-51-1	p-tert-Butyltoluene	21	0.00E+00	1	1	0.00E+00	0.00E+00	0.00E+00	1	1	20	1	0.00E+00
236	98-82-8	Cumene	20	0.00E+00	1	1	0.00E+00	0.00E+00	0.00E+00	1	1	20	1	0.00E+00
237	98-83-9	alpha-Methylstyrene	19	0.00E+00	1	1	0.00E+00	0.00E+00	0.00E+00	1	1	20	1	0.00E+00
238	98-86-2	Acetophenone	11	4.49E-05	1	1	4.49E-05	9.89E-13	4.49E-05	1	1	20	1	2.25E-06
239	98-95-3	Nitrobenzene	12	3.14E-05	1	1	3.14E-05	6.90E-13	3.14E-05	1	1	20	1	1.57E-06
240							2.62E-01							
241														
242	Coplanar PCBs			LOP08				LVP01	LVP03	HEPA 1	HEPA 2	VOC Ox	NaOH Scr	LVP28
243				g/sec				g/sec	g/sec	DF	DF	DF	DF	g/sec
244	31508-00-6	2,3',4,4',5-Pentachlorobiphenyl (PBC 118)		8.88E-17				1.26E-21	8.88E-17	2000	100	20	1	2.22E-23
245	32598-13-3	3,3',4,4'-Tetrachlorobiphenyl (TCB)		8.88E-17			Correction for Coplanar	1.26E-21	8.88E-17	2000	100	20	1	2.22E-23
246	32598-14-4	2,3,3',4,4'-Pentachlorobiphenyl (PCB 105)		8.88E-17			0.99 as parent	1.26E-21	8.88E-17	2000	100	20	1	2.22E-23
247	32774-16-6	3,3',4,4',5,5'-Hexachlorobiphenyl		8.88E-17			0.01 as coplanar	1.26E-21	8.88E-17	2000	100	20	1	2.22E-23
248	35065-29-3	2,2',3,4,4',5,5'-Heptachlorobiphenyl		8.88E-17				1.26E-21	8.88E-17	2000	100	20	1	2.22E-23
249	35065-30-6	2,2',3,3',4,4',5-Heptachlorobiphenyl		8.88E-17				1.26E-21	8.88E-17	2000	100	20	1	2.22E-23
250	38380-08-4	2,3,3',4,4',5-Hexachlorobiphenyl (PCB 157)		8.88E-17				1.26E-21	8.88E-17	2000	100	20	1	2.22E-23
251	39635-31-9	2,3,3',4,4',5,5'-Heptachlorobiphenyl		8.88E-17				1.26E-21	8.88E-17	2000	100	20	1	2.22E-23
252	52663-72-6	2,3',4,4',5,5'-Hexachlorobiphenyl		8.88E-17				1.26E-21	8.88E-17	2000	100	20	1	2.22E-23
253	57465-28-8	3,3',4,4',5-Pentachlorobiphenyl		8.88E-17				1.26E-21	8.88E-17	2000	100	20	1	2.22E-23
254	65510-44-3	2',3,4,4',5-Pentachlorobiphenyl		8.88E-17				1.26E-21	8.88E-17	2000	100	20	1	2.22E-23
255	69782-90-7	2,3,3',4,4',5'-Hexachlorobiphenyl		8.88E-17				1.26E-21	8.88E-17	2000	100	20	1	2.22E-23
256	70362-50-4	3,4,4',5-Tetrachlorobiphenyl		8.88E-17				1.26E-21	8.88E-17	2000	100	20	1	2.22E-23
257	74472-37-0	2,3,4,4',5-Pentachlorobiphenyl		8.88E-17				1.26E-21	8.88E-17	2000	100	20	1	2.22E-23
258														
259	1336-36-3	Polychlorinated biphenyls (PCBs)		1.23E-13										
260	1336-36-3	UnCorrected (for coplanar PCBs)		1.24E-13										

Table B-6 HMP06 - Unspooling HLW Melter

Row	A	B	C	D	E	F	G	H	I	J	K
2			Feed Rate					HMP06 rate	Performance	Adjusted	Calc'd rate HMP06
3	CAS #	COPC	g/sec	In ACM	Group	Grouping	Phase	g/sec	Factor	PF	g/sec
4	100-00-5	p-Nitrochlorobenzene	3.49E-02	No		10	vapor			1.44E-01	5.03E-03
5	100-21-0	p-Phthalic acid	3.49E-02	Yes	1	1	vapor	6.81E-03	1.95E-01		6.81E-03
6	100-25-4	1,4-Dinitrobenzene	3.49E-02	No		6	particle			1.97E-01	6.86E-03
7	100-41-4	Ethyl benzene	7.67E-03	No		20	vapor			1.53E-10	1.17E-12
8	100-42-5	Styrene	7.67E-03	No		19	vapor			4.41E-08	3.39E-10
9	10061-01-5	cis-1,3-Dichloropropene	7.67E-03	Yes	19	19	vapor	9.78E-10	1.27E-07		9.78E-10
10	10061-02-6	trans-1,3-Dichloropropene	7.67E-03	No		17	vapor			2.45E-06	1.88E-08
11	101-55-3	4-Bromophenylphenyl ether	3.49E-02	No		14	vapor			1.00E-02	3.50E-04
12	101-84-8	Diphenyl ether	7.67E-03	No		16	vapor			3.90E-04	2.99E-06
13	106-35-4	3-Heptanone	7.67E-03	No		14	vapor			1.00E-02	7.71E-05
14	106-42-3	p-Xylene (Dimethyl benzene)	7.67E-03	No		19	vapor			4.41E-08	3.39E-10
15	106-46-7	1,4-Dichlorobenzene	7.67E-03	No		18	vapor			1.15E-06	8.79E-09
16	106-88-7	1,2-Epoxybutane	7.67E-03	No		15	vapor			2.26E-03	1.74E-05
17	106-93-4	Ethylene dibromide (Dibromoethane)	3.49E-02	Yes	16	16	vapor	1.87E-06	5.36E-05		1.87E-06
18	106-97-8	Butane	7.67E-03	Yes	26	26	vapor	0.00E+00	0.00E+00		0.00E+00
19	106-99-0	1,3-Butadiene	7.67E-03	Yes	23	23	vapor	0.00E+00	0.00E+00		0.00E+00
20	107-02-8	Acrolein	7.67E-03	No		14	vapor			1.00E-02	7.71E-05
21	107-05-1	3-Chloropropene (Allyl chloride)	7.67E-03	No		20	vapor			1.53E-10	1.17E-12
22	107-06-2	1,2-Dichloroethane (Ethylene chloride)	7.67E-03	No		17	vapor			2.45E-06	1.88E-08
23	107-12-0	Propionitrile	7.67E-03	No		13	vapor			4.22E-02	3.23E-04
24	107-13-1	Acrylonitrile	7.67E-03	No		14	vapor			1.00E-02	7.71E-05
25	107-18-6	2-Propene-1-ol	3.49E-02	No		10	vapor			1.44E-01	5.03E-03
26	107-31-3	Formic acid, methyl ester	3.49E-02	No		15	vapor			2.26E-03	7.90E-05
27	107-66-4	Dibutylphosphate	3.49E-02	No		5	particle			1.97E-01	6.86E-03
28	107-87-9	2-Pentanone	7.67E-03	No		14	vapor			1.00E-02	7.71E-05
29	108-03-2	1-Nitropropane	3.49E-02	No		14	vapor			1.00E-02	3.50E-04
30	108-05-4	Vinyl acetate	3.49E-02	No		16	vapor			3.90E-04	1.36E-05
31	108-10-1	Hexone (4-Methyl-2-pentanone or MIBK)	7.67E-03	No		14	vapor			1.00E-02	7.71E-05
32	108-20-3	Bis(isopropyl)ether	7.67E-03	No		18	vapor			1.15E-06	8.79E-09
33	108-38-3	m-Xylene (Dimethyl benzene)	7.67E-03	No		19	vapor			4.41E-08	3.39E-10
34	108-39-4	m-Cresol	7.67E-03	No		9	vapor			1.52E-01	1.16E-03
35	108-87-2	Methylcyclohexane	7.67E-03	Yes	25	25	vapor	0.00E+00	0.00E+00		0.00E+00
36	108-88-3	Toluene	7.67E-03	Yes	19	19	vapor	1.06E-11	1.39E-09		1.06E-11
37	108-90-7	Chlorobenzene	7.67E-03	No		19	vapor			4.41E-08	3.39E-10
38	108-93-0	Cyclohexanol	7.67E-03	No		10	vapor			1.44E-01	1.11E-03
39	108-94-1	Cyclohexanone	7.67E-03	No		11	vapor			1.04E-01	7.96E-04
40	108-95-2	Phenol	3.49E-02	Yes	8	8	vapor	6.71E-03	1.93E-01		6.71E-03
41	109-66-0	n-Pentane	7.67E-03	No		26	vapor			0.00E+00	0.00E+00
42	109-99-9	Tetrahydrofuran	1.63E-02	No		13	vapor			4.22E-02	6.86E-04
43	110-12-3	5-Methyl-2-hexanone	7.67E-03	No		15	vapor			2.26E-03	1.74E-05
44	110-43-0	2-Heptanone	7.67E-03	No		15	vapor			2.26E-03	1.74E-05
45	110-54-3	n-Hexane	7.67E-03	Yes	27	27	vapor	0.00E+00	0.00E+00		0.00E+00
46	110-62-3	n-Valeraldehyde	3.49E-02	No		15	vapor			2.26E-03	7.90E-05
47	110-82-7	Cyclohexane	7.67E-03	Yes	24	24	vapor	0.00E+00	0.00E+00		0.00E+00
48	110-83-8	Cyclohexene	7.67E-03	No		22	vapor			2.39E-18	1.83E-20
49	110-86-1	Pyridine	3.49E-02	No		11	vapor			1.04E-01	3.62E-03
50	111-65-9	n-Octane	7.67E-03	No		28	vapor			0.00E+00	0.00E+00
51	111-76-2	Ethylene glycol monobutyl ether	3.49E-02	No		9	vapor			1.52E-01	5.29E-03
52	111-84-2	n-Nonane	7.67E-03	Yes	28	28	vapor	0.00E+00	0.00E+00		0.00E+00
53	117-81-7	Bis(2-ethylhexyl)phthalate (DEHP)	3.49E-02	No		30	particle			2.44E-01	8.50E-03
54	117-84-0	n-Dioctyl phthalate	3.49E-02	No		32	particle			1.42E-01	4.97E-03
55	118-74-1	Hexachlorobenzene	7.21E-04	Yes	18	18	vapor	8.26E-10	1.15E-06		8.26E-10
56	120-12-7	Anthracene	3.49E-02	Yes	13	13	vapor	1.11E-03	3.18E-02		1.11E-03
57	120-82-1	1,2,4-Trichlorobenzene	7.67E-03	Yes	17	17	vapor	1.88E-08	2.45E-06		1.88E-08
58	120-83-2	2,4-Dichlorophenol	3.49E-02	No		10	vapor			1.44E-01	5.03E-03
59	121-44-8	Triethylamine	7.67E-03	No		15	vapor			2.26E-03	1.74E-05
60	121-69-7	Dimethylaniline	7.67E-03	No		13	vapor			4.22E-02	3.23E-04
61	122-39-4	N,N-Diphenylamine	7.67E-03	Yes	10	10	vapor	1.03E-03	1.35E-01		1.03E-03
62	123-19-3	4-Heptanone	7.67E-03	No		13	vapor			4.22E-02	3.23E-04
63	123-38-6	n-Propionaldehyde	7.67E-03	No		14	vapor			1.00E-02	7.71E-05
64	123-51-3	3-Methyl-1-butanol	7.67E-03	No		12	vapor			9.48E-02	7.28E-04
65	123-86-4	Acetic acid n-butyl ester	3.49E-02	No		16	vapor			3.90E-04	1.36E-05
66	123-91-1	1,4-Dioxane	2.09E-02	No		10	vapor			1.44E-01	3.02E-03
67	126-73-8	Tributyl phosphate	3.49E-02	Yes	7	7	vapor	6.90E-03	1.98E-01		6.90E-03
68	126-98-7	2-Methyl-2-propenenitrile (Methacrylonitrile)	7.67E-03	No		16	vapor			3.90E-04	2.99E-06
69	127-18-4	Perchloroethylene (tetrachloroethylene)	7.67E-03	Yes	21	21	vapor	4.81E-14	6.27E-12		4.81E-14
70	127-19-5	N,N-Dimethylacetamide	7.67E-03	No		5	vapor			1.97E-01	1.51E-03
71	128-37-0	2,6-Bis(tert-butyl)-4-methylphenol	3.49E-02	No		32	vapor			1.42E-01	4.97E-03
72	129-00-0	Pyrene	3.49E-02	Yes	33	33	particle	4.37E-03	1.25E-01		4.37E-03
73	1321-64-8	Pentachloronaphthalene	3.49E-02	No		14	particle			1.00E-02	3.50E-04
74	1321-65-9	Trichloronaphthalene	3.49E-02	No		15	vapor			2.26E-03	7.90E-05
75	132-64-9	Dibenzofuran	3.49E-02	Yes	15	15	vapor	7.90E-05	2.26E-03		7.90E-05
76	1335-87-1	Hexachloronaphthalene	3.49E-02	No		14	particle			1.00E-02	3.50E-04
77	1335-88-2	Tetrachloronaphthalene	3.49E-02	No		15	particle			2.26E-03	7.90E-05
78	1336-36-3	Polychlorinated biphenyls (PCBs)	1.21E-02	Yes	35	35	particle	6.69E-05	5.53E-03		6.62E-05
79	141-78-6	Acetic acid ethyl ester (Ethyl acetate)	3.49E-02	No		14	vapor			1.00E-02	3.50E-04
80	141-79-7	4-Methyl-3-penten-2-one	3.49E-02	No		13	vapor			4.22E-02	1.47E-03
81	142-82-5	n-Heptane	7.67E-03	No		27	vapor			0.00E+00	0.00E+00
82	144-62-7	Oxalic acid	3.49E-03	Yes	3	3	vapor	6.83E-04	1.96E-01		6.83E-04
83	156-60-5	trans-1,2-Dichloroethylene	7.67E-03	No		20	vapor			1.53E-10	1.17E-12
84	1582-09-8	Trifluralin	3.49E-02	No		14	particle			1.00E-02	3.50E-04
85	1634-04-4	Methyl tert-butyl ether	7.67E-03	No		16	vapor			3.90E-04	2.99E-06
86	1836-75-5	Nitrofen	3.49E-02	No		30	particle			2.44E-01	8.50E-03
87	189-55-9	Dibenzo(a,i)pyrene	3.49E-02	No		5	particle			1.97E-01	6.86E-03
88	189-64-0	Dibenzo(a,h)pyrene	3.49E-02	No		5	particle			1.97E-01	6.86E-03
89	191-24-2	Benzo(g,h,i)perylene	3.49E-02	No		30	particle			2.44E-01	8.50E-03
90	191-30-0	Benzo(a,l)pyrene	3.49E-02	No		5	particle			1.97E-01	6.86E-03
91	192-65-4	Dibenzo(a,e)pyrene	3.49E-02	No		5	particle			1.97E-01	6.86E-03
92	193-39-5	Indeno(1,2,3-cd)pyrene	3.49E-02	No		30	particle			2.44E-01	8.50E-03
93	205-82-3	Benzo(j)fluoranthene	3.49E-02	No		7	particle			1.98E-01	6.90E-03
94	205-99-2	Benzo(b)fluoranthene	3.49E-02	No		30	particle			2.44E-01	8.50E-03
95	206-44-0	Fluoranthene	3.49E-02	No		33	particle			1.31E-01	4.58E-03
96	207-08-9	Benzo(k)fluoranthene	3.49E-02	No		30	particle			2.44E-01	8.50E-03
97	208-96-8	Acenaphthylene	3.49E-02	Yes	14	14	vapor	3.50E-04	1.00E-02		3.50E-04
98	218-01-9	Chrysene	3.49E-02	Yes	32	32	particle	5.26E-03	1.51E-01		5.26E-03
99	2234-13-1	Octachloronaphthalene	3.49E-02	No		14	particle			1.00E-02	3.50E-04
100	224-42-0	Dibenz(a,j)acridine	3.49E-02	No		4	particle			1.95E-01	6.80E-03
101	226-36-8	Dibenz(a,h)acridine	3.49E-02	No		4	particle			1.95E-01	6.80E-03
102	2385-85-5	Mirex	3.49E-02	No		17	vapor			2.45E-06	8.55E-08
103	25551-13-7	Trimethyl benzene	7.67E-03	No		19	vapor			4.41E-08	3.39E-10
104	26140-60-3	Terphenyls	3.49E-02	No		34	particle			7.02E-02	2.45E-03
105	27154-33-2	Trichlorofluoroethane	7.67E-03	No		23	vapor			0.00E+00	0.00E+00
106	287-92-3	Cyclopentane	7.67E-03	No		24	vapor			0.00E+00	0.00E+00
107	309-00-2	Aldrin	4.30E-04	Yes	34	34	particle	3.02E-05	7.02E-02		3.02E-05
108	319-84-6	Hexachlorocyclohexane (Lindane) Alpha BHC	1.16E-04	No		33	vapor			1.31E-01	1.53E-05
109	319-85-7	Hexachlorocyclohexane (Lindane) Beta BHC	1.16E-04	Yes	30	30	particle	2.86E-05	2.46E-01		2.86E-05
110	319-86-8	Delta-BHC	1.16E-04	No		30	particle			2.44E-01	2.83E-05
111	3697-24-3	5-Methylchrysene	3.49E-02	No		32	particle			1.42E-01	4.97E-03
112	3825-26-1	Ammonium perfluorooctanoate	3.49E-02	No		14	particle			1.00E-02	3.50E-04
113	4170-30-3	2-Butenaldehyde (2-Butenal or Crotonaldehyde)	7.67E-03	Yes	11	11	vapor	7.96E-04	1.04E-01		7.96E-04
114	465-73-6	Isodrin	2.32E-04	No		35	vapor			5.53E-03	1.29E-06
115	50-00-0	Formaldehyde	7.67E-03	No		8	vapor			2.17E-01	1.67E-03
116	50-29-3	4,4-DDT	2.32E-04	No		33	particle			1.31E-01	3.05E-05
117	50-32-8	Benzo(a)pyrene	4.42E-04	Yes	30	30	particle	1.07E-04	2.41E-01		1.07E-04
118	53-70-3	Dibenzo(a,h)anthracene	5.81E-05	No		7	particle			1.98E-01	1.15E-05
119	540-59-0	1,2-Dichloroethylene	7.67E-03	No		19	vapor			4.41E-08	3.39E-10
120	540-84-1	2,2,4-Trimethylpentane	7.67E-03	No		28	vapor			0.00E+00	0.00E+00
121	541-73-1	1,3-Dichlorobenzene	7.67E-03	No		19	vapor			4.41E-08	3.39E-10
122	56-23-5	Carbon tetrachloride	7.67E-03	Yes	22	22	vapor	1.83E-20	2.39E-18		1.83E-20
123	563-80-4	3-Methyl-2-butanone	7.67E-03	No		14	vapor			1.00E-02	7.71E-05
124	56-49-5	3-Methylcholanthrene	3.49E-02	No		28	particle			0.00E+00	0.00E+00
125	56-55-3	Benzo(a)anthracene	3.49E-02	No		33	particle			1.31E-01	4.58E-03
126	57-14-7	1,1-Dimethylhydrazine	3.49E-02	Yes	12	12	vapor	3.31E-03	9.48E-02		3.31E-03
127	58-89-9	gamma-BHC (Lindane)	1.16E-04	Yes	32	32	particle	1.81E-05	1.55E-01		1.81E-05
128	58-90-2	2,3,4,6-Tetrachlorophenol	3.49E-02	Yes	11	11	vapor	3.71E-03	1.06E-01		3.71E-03
129	591-78-6	2-Hexanone	7.67E-03	No		14	vapor			1.00E-02	7.71E-05
130	59-50-7	4-Chloro-3-methylphenol	3.49E-02	No		32	particle			1.42E-01	4.97E-03
131	59-89-2	N-Nitrosomorpholine	3.49E-02	No		6	vapor			1.97E-01	6.88E-03
132	602-87-9	5-Nitroacenaphthene	3.49E-02	No		9	particle			1.52E-01	5.29E-03
133	60-29-7	Ethyl ether	3.49E-02	No		17	vapor			2.45E-06	8.55E-08
134	603-34-9	Triphenylamine	3.49E-02	Yes	32	32	vapor	4.22E-03	1.21E-01		4.22E-03
135	60-34-4	Methylhydrazine	7.67E-03	No		10	vapor			1.44E-01	1.11E-03
136	60-35-5	Acetamide	7.67E-03	Yes	5	5	vapor	1.51E-03	1.97E-01		1.51E-03
137	60-57-1	Dieldrin	2.32E-04	Yes	33	33	particle	3.19E-05	1.37E-01		3.19E-05
138	621-64-7	Di-n-Propylnitrosamine (N-Nitroso-di-n-propylamine)	3.49E-02	No		10	vapor			1.44E-01	5.03E-03
139	624-83-9	Methyl isocyanate	7.67E-03	No		17	vapor			2.45E-06	1.88E-08
140	627-13-4	Nitric acid, propyl ester	3.49E-02	No		17	vapor			2.45E-06	8.55E-08
141	62-75-9	N-Nitroso-N,N-dimethylamine (Dimethylnitrosamine)	6.51E-02	Yes	9	9	vapor	9.87E-03	1.52E-01		9.87E-03
142	630-20-6	1,1,1,2-Tetrachloroethane	7.67E-03	No		18	vapor			1.15E-06	8.79E-09
143	64-17-5	Ethyl alcohol	7.67E-03	No		10	vapor			1.44E-01	1.11E-03
144	64-18-6	Formic acid	3.49E-02	No		7	vapor			1.98E-01	6.90E-03
145	64-19-7	Acetic acid	3.49E-02	No		6	vapor			1.97E-01	6.86E-03
146	67-56-1	Methyl alcohol (Methanol)	7.67E-03	No		10	vapor			1.44E-01	1.11E-03
147	67-63-0	2-Propyl alcohol (Isopropanol, Propan-2-01)	7.67E-03	No		11	vapor			1.04E-01	7.96E-04
148	67-64-1	2-Propanone (Acetone)	4.18E-02	No		13	vapor			4.22E-02	1.76E-03
149	67-66-3	Chloroform	7.67E-03	No		19	vapor			4.41E-08	3.39E-10
150	67-72-1	Hexachloroethane	3.49E-02	No		19	vapor			4.41E-08	1.54E-09
151	684-16-2	Hexafluoroacetone	7.67E-03	No		19	vapor			4.41E-08	3.39E-10
152	71-23-8	n-Propyl alcohol	7.67E-03	No		11	vapor			1.04E-01	7.96E-04
153	71-36-3	n-Butyl alcohol	7.67E-03	No		11	vapor			1.04E-01	7.96E-04
154	71-43-2	Benzene	7.67E-03	Yes	19	19	vapor	2.73E-11	3.56E-09		2.73E-11
155	71-55-6	Methyl chloroform (1,1,1-Trichloroethane)	7.67E-03	No		21	vapor			6.27E-12	4.81E-14
156	72-20-8	Endrin	2.32E-04	No		32	particle			1.42E-01	3.31E-05
157	72-43-5	Methoxychlor	1.16E-03	No		7	particle			1.98E-01	2.30E-04
158	72-54-8	4,4-DDD	2.32E-04	No		32	particle			1.42E-01	3.31E-05
159	72-55-9	4,4-DDE	2.32E-04	No		34	particle			7.02E-02	1.63E-05
160	74-83-9	Bromomethane (Methyl bromide)	7.67E-03	No		19	vapor			4.41E-08	3.39E-10
161	74-87-3	Chloromethane (Methyl chloride)	7.67E-03	No		20	vapor			1.53E-10	1.17E-12
162	74-97-5	Bromochloromethane	7.67E-03	No		17	vapor			2.45E-06	1.88E-08
163	74-99-7	Methylacetylene	3.49E-02	No		20	vapor			1.53E-10	5.34E-12
164	75-00-3	Chloroethane	7.67E-03	No		20	vapor			1.53E-10	1.17E-12
165	75-01-4	Vinyl chloride (1-Chloroethene)	3.49E-02	No		22	vapor			2.39E-18	8.32E-20
166	75-05-8	Acetonitrile	1.09E-02	Yes	13	13	vapor	5.74E-04	5.25E-02		5.74E-04
167	75-07-0	Acetaldehyde	3.49E-02	No		13	vapor			4.22E-02	1.47E-03
168	75-09-2	Dichloromethane (Methylene chloride)	7.67E-03	No		19	vapor			4.41E-08	3.39E-10
169	75-12-7	Formamide	3.49E-02	Yes	4	4	vapor	6.80E-03	1.95E-01		6.80E-03
170	75-15-0	Carbon disulfide	7.67E-03	No		20	vapor			1.53E-10	1.17E-12
171	75-21-8	Ethylene oxide (Oxirane)	7.67E-03	No		15	vapor			2.26E-03	1.74E-05
172	75-27-4	Bromodichloromethane	7.67E-03	No		18	vapor			1.15E-06	8.79E-09
173	75-34-3	1,1-Dichloroethane	7.67E-03	No		19	vapor			4.41E-08	3.39E-10
174	75-35-4	1,1-Dichloroethene (Vinylidene chloride)	7.67E-03	No		22	vapor			2.39E-18	1.83E-20
175	75-43-4	Dichlorofluoromethane	7.67E-03	No		20	vapor			1.53E-10	1.17E-12
176	75-45-6	Chlorodifluoromethane	7.67E-03	No		22	vapor			2.39E-18	1.83E-20
177	75-50-3	Trimethylamine	7.67E-03	No		14	vapor			1.00E-02	7.71E-05
178	75-52-5	Nitromethane	3.49E-02	No		13	vapor			4.22E-02	1.47E-03
179	75-55-8	2-Methylaziridine	3.49E-02	No		11	vapor			1.04E-01	3.62E-03
180	75-61-6	Difluorodibromomethane	7.67E-03	No		22	vapor			2.39E-18	1.83E-20
181	75-63-8	Trifluorobromomethane	7.67E-03	No		25	vapor			0.00E+00	0.00E+00
182	75-65-0	2-Methyl-2-propanol	7.67E-03	No		11	vapor			1.04E-01	7.96E-04
183	75-69-4	Trichlorofluoromethane	7.67E-03	No		23	vapor			0.00E+00	0.00E+00
184	75-71-8	Dichlorodifluoromethane	7.67E-03	No		25	vapor			0.00E+00	0.00E+00
185	75-99-0	2,2-Dichloropropionic acid	3.49E-02	No		6	vapor			1.97E-01	6.86E-03
186	76-03-9	Trichloroacetic acid	7.67E-03	No		5	vapor			1.97E-01	1.51E-03
187	76-11-9	1,1,1,2-Tetrachloro-2,2-difluoroethane	3.49E-02	No		24	vapor			0.00E+00	0.00E+00
188	76-12-0	1,1,2,2-Tetrachloro-1,2-difluoroethane	3.49E-02	No		23	vapor			0.00E+00	0.00E+00
189	76-13-1	1,2,2-Trichloro-1,1,2-trifluoroethane (Freon 113)	7.67E-03	No		25	vapor			0.00E+00	0.00E+00
190	76-14-2	1,2-Dichloro-1,1,2,2-tetrafluoroethane	7.67E-03	No		28	vapor			0.00E+00	0.00E+00
191	76-15-3	Chloropentafluoroethane	7.67E-03	Yes	29	29	vapor	0.00E+00	0.00E+00		0.00E+00
192	76-44-8	Heptachlor	7.56E-04	Yes	16	16	vapor	6.62E-07	8.77E-04		6.62E-07
193	78-83-1	2-Methylpropyl alcohol (Isobutyl alcohol)	3.49E-02	No		11	vapor			1.04E-01	3.62E-03
194	78-87-5	1,2-Dichloropropane	7.67E-03	No		19	vapor			4.41E-08	3.39E-10
195	78-92-2	1-Methylpropyl alcohol (2-Butanol)	7.67E-03	No		11	vapor			1.04E-01	7.96E-04
196	78-93-3	Methyl ethyl ketone (MEK, 2-Butanone)	7.67E-03	No		13	vapor			4.22E-02	3.23E-04
197	79-00-5	1,1,2-Trichloroethane	7.67E-03	No		17	vapor			2.45E-06	1.88E-08
198	79-01-6	Trichloroethylene	7.67E-03	Yes	20	20	vapor	1.33E-12	1.73E-10		1.33E-12
199	79-09-4	Propionic acid	3.49E-02	No		8	vapor			2.17E-01	7.58E-03
200	79-10-7	2-Propenoic acid	3.49E-02	No		8	vapor			2.17E-01	7.58E-03
201	79-20-9	Methyl acetate	3.49E-02	No		11	vapor			1.00E-02	3.50E-04

Adjusted Performance Factors

Group	PF
1	1.95E-01
2	2.43E-01
3	1.96E-01
4	1.95E-01
5	1.97E-01
6	1.97E-01
7	1.98E-01
8	2.17E-01
9	1.52E-01
10	1.44E-01
11	1.04E-01
12	9.48E-02
13	4.22E-02
14	1.00E-02
15	2.26E-03
16	3.90E-04
17	2.45E-06
18	1.15E-06
19	4.41E-08
20	1.53E-10
21	6.27E-12
22	2.39E-18
23	0.00E+00
24	0.00E+00
25	0.00E+00
26	0.00E+00
27	0.00E+00
28	0.00E+00
29	0.00E+00
30	2.44E-01
31	1.91E-01
32	1.42E-01
33	1.31E-01
34	7.02E-02
35	5.53E-03

Coplanar PCBs		HMP06 g/sec
31508-00-6	2,3',4,4',5-Pentachlorobiphenyl (PBC 118)	4.78E-08
32598-13-3	3,3',4,4'-Tetrachlorobiphenyl (TCB)	4.78E-08
32598-14-4	2,3,3',4,4'-Pentachlorobiphenyl (PCB 105)	4.78E-08
32774-16-6	3,3',4,4',5,5'-Hexachlorobiphenyl	4.78E-08
35065-29-3	2,2',3,4,4',5,5'-Heptachlorobiphenyl	4.78E-08
35065-30-6	2,2',3,3',4,4',5-Heptachlorobiphenyl	4.78E-08
38380-08-4	2,3,3',4,4',5-Hexachlorobiphenyl (PCB 157)	4.78E-08
39635-31-9	2,3,3',4,4',5,5'-Heptachlorobiphenyl	4.78E-08
52663-72-6	2,3',4,4',5,5'-Hexachlorobiphenyl	4.78E-08
57465-28-8	3,3',4,4',5-Pentachlorobiphenyl	4.78E-08
65510-44-3	2',3,4,4',5-Pentachlorobiphenyl	4.78E-08
69782-90-7	2,3,3',4,4',5'-Hexachlorobiphenyl	4.78E-08
70362-50-4	3,4,4',5-Tetrachlorobiphenyl	4.78E-08
74472-37-0	2,3,4,4',5-Pentachlorobiphenyl	4.78E-08
1336-36-3	Polychlorinated biphenyls (PCBs)	6.62E-05
1336-36-3	UnCorrected (for coplanar PCBs)	6.69E-05

Correction for Coplanar PCBs	
0.99	as parent
0.01	as coplanar sum

Table 8-9 HMP08 - Unbaled HLW Melter

	A	B	C	D	E	F	G	H	I	J	K	L	M	N	O	P	Q	R	S	T	U	V	W
1											Calculated												
2			Feed Rate					HMP08 rate	Performance	Adjusted	HMP08												
3	CAS #	COPC	g/sec	In AOM	Group	Grouping	Phase	g/sec	Factor	PF	g/sec		Adjusted Performance Factors										
203	79-34-5	1,1,2,2-Tetrachloroethane	7.67E-03	No		18	vapor			3.90E-04	2.99E-06												
203	8001-35-2	Toxaphene	3.81E-04	Yes	10	11	particle	4.11E-05	1.34E-01		5.51E-05												
204	87-68-3	Pentachlorobenzene (PCBs in quinoline pens)	3.49E-02	No		1	vapor			4.21E-02	1.47E-03												
205	83-32-9	Acenaphthene	3.49E-02	No		18	vapor			2.28E-03	7.90E-05												
206	84-66-2	Diethylphthalate	3.49E-02	Yes	5	5	vapor	6.33E-03	1.82E-01		6.33E-03												
207	84-74-2	Dibutylphthalate	3.49E-02	Yes	31	31	particle	6.68E-03	7.91E-01		5.04E-03												
208	85-01-8	Phenanthrene	3.49E-02	No		13	vapor			4.22E-05	1.47E-03												
209	85-68-7	Butylbenzyl phthalate	3.49E-02	No		31	particle			1.91E-01	6.66E-03												
210	86-73-7	Fluorene	3.49E-02	No		14	particle			1.00E-02	3.50E-04												
211	87-68-3	Hexachlorobutadiene	7.67E-03	Yes	20	20	vapor	1.02E-12	1.33E-10		1.32E-12												
212	87-86-5	Pentachlorophenol	3.49E-02	Yes	6	6	vapor	6.86E-03	1.97E-01		6.86E-03												
213	88-06-2	2,4,6-Trichlorophenol	3.49E-02	No		17	vapor			1.44E-01	5.03E-03												
214	88-72-2	2-Nitrotoluene	7.67E-03	No		12	vapor			9.68E-02	7.28E-04												
215	88-75-5	2-Nitrophenol	3.49E-02	No		17	vapor			9.48E-02	3.31E-03												
216	88-85-7	2-sec-Butyl-4,6-dinitrophenol (Dinoseb)	3.49E-02	Yes	9	9	particle	9.68E-03	2.78E-01		9.68E-03												
217	89-89-1	Picric acid	3.49E-02	Yes	2	2	particle	8.48E-03	2.43E-01		8.48E-03												
218	91-20-3	Naphthalene	1.16E-03	Yes	15	15	vapor	2.77E-07	3.39E-04		2.77E-07												
219	91-22-5	Quinoline	3.49E-02	No		8	vapor			1.52E-01	5.29E-03												
220	91-58-7	2-Chloronaphthalene	3.49E-02	No		18	vapor			3.90E-04	1.36E-05												
221	92-52-4	1,1'-Biphenyl	3.49E-02	No		18	vapor			3.90E-04	1.36E-05												
222	92-93-3	4-Nitrobiphenyl	3.49E-02	No		1	particle			1.44E-01	5.03E-03												
223	93-72-1	Silvex (2,4,5-TP)	3.49E-02	Yes		5	particle			1.97E-01	6.86E-03												
224	93-76-5	2,4,5-T	3.49E-02	Yes		5	particle			1.97E-01	6.86E-03												
225	94-75-7	2,4-D and esters (1600 pens)	3.49E-02	No		8	vapor			1.97E-01	6.86E-03												
226	95-13-6	Indene	3.49E-02	Yes		18	vapor			1.15E-06	4.00E-08												
227	95-47-6	p-Xylene	7.67E-03	Yes		19	vapor			6.41E-08	3.39E-10												
228	95-48-7	o-Cresol (2-Methylphenol)	7.67E-03	No		8	vapor			1.52E-01	1.16E-03												
229	95-49-8	2-Chlorotoluene	3.49E-02	Yes		19	vapor			4.41E-08	1.54E-06												
230	95-50-1	o-Dichlorobenzene (1,2-Dichlorobenzene)	7.67E-03	Yes		18	vapor			1.15E-06	8.78E-08												
231	95-57-8	2-Chlorophenol	3.49E-02	No		1	vapor			1.04E-01	3.62E-03												
232	95-95-4	2,4,5-Trichlorophenol	3.49E-02	No		8	vapor			1.97E-01	6.86E-03												
233	95-63-6	1,2,4-Trimethylbenzene	7.67E-03	No		19	vapor			1.00E-02	7.71E-05												
234	96-45-8	Bis(2-ethylhexyl) hydrogen phosphorothioate	3.49E-02	Yes		19	particle			4.41E-08	1.54E-06												
235	98-51-1	p-tert-Butyltoluene	3.49E-02	No		2	vapor			6.27E-12	2.19E-13												
236	98-82-8	Cumene	3.49E-02	No		2	vapor			1.53E-11	5.34E-12												
237	98-83-9	alpha-Methylstyrene	7.67E-03	No		19	vapor			4.41E-08	3.39E-11												
238	98-86-2	Acetophenone	3.49E-02	Yes	11	11	vapor	3.53E-03	1.01E-01		3.53E-03												
239	98-95-3	Nitrobenzene	3.49E-02	No		18	vapor			9.48E-02	3.31E-03												
240											4.29E-01												

Table 6-10 HOP10 - HLW Vessel Ventilation

1	Table 6-10 HOP10 - HLW Vessel Ventilation																							
2		Feed Rate						Inlet Values	Partition	Adjusted	Calculated													
3	CAS #	(VOC)	g/min	in ADM	Group	Grouping	Phase	g/min	factor	VP	g/min		Adjusted Performance Factors Group	VP										
4	100-00-5	p-Nitrochlorobenzene	3.49E-03	No			vapor			3.31E-04	1.24E-05													
5	100-21-0	p-Phthalic acid	3.49E-03	Yes	1	1	vapor	1.04E-01	4.48E-03		1.00E-01		1	1.48E-03	Explosive PCBs					PCB01				
6	100-25-4	1,4-Dinitrobenzene	3.49E-03	Yes		0	particle			1.02E-08	3.72E-08		2	3.27E-09						Aroclor				
7	100-41-4	Ethylbenzene	7.67E-03	Yes		20	vapor			3.39E-03	2.64E-03		3	9.63E-09	3,3',4,4',5-Pentachlorobiphenyl (PCB 126)					1.36E-08				
8	100-42-5	Styrene	7.67E-03	Yes		19	vapor			2.77E-03	3.13E-03		4	6.06E-08	3,3',4,4'-Tetrachlorobiphenyl (TCB)					1.36E-08				
9	100-61-8	N-methylaniline	7.67E-03	Yes	18	18	vapor	1.88E-03	7.85E-04		3.88E-03		5	4.88E-07	3,3',4,4',5-Pentachlorobiphenyl (PCB 126)					1.36E-08		Correction for Explosive PCBs		
10	100-61-8	N-methyl-N,2,4-Dinitrosoaniline	7.67E-03	Yes		17	vapor			7.72E-07	3.60E-09		6	1.07E-06	3,3',4,4',5,5'-Hexachlorobiphenyl					1.36E-08		2.99 as parent		
11	101-55-3	4-Bromophenylphenyl ether	3.49E-03	Yes		14	vapor			2.52E-04	4.80E-06		7	6.38E-08	3,3',4,4',5,5'-Heptachlorobiphenyl					1.36E-08		0.01 as explosive sum		
12	101-84-8	Diphenyl ether	7.67E-03	Yes		16	vapor			2.34E-03	2.36E-07		8	1.12E-08	3,3',4,4',5,5',6-Octachlorobiphenyl					1.36E-08				
13	106-42-3	3-Hexanone	7.67E-03	Yes		14	vapor			2.52E-03	1.84E-08		9	6.13E-09	3,3',4,4',5,5',6-Heptachlorobiphenyl (PCB 157)					1.36E-08				
14	106-42-3	p-Xylene (2-methylpentane)	7.67E-03	No		15	vapor			3.77E-03	2.12E-10		10	3.07E-09	3,3',4,4',5,5',6-Heptachlorobiphenyl					1.36E-08				
15	106-46-7	1,4-Dichlorobenzene	7.67E-03	Yes		14	vapor			1.31E-03	3.39E-04		11	2.37E-04	3,3',4,4',5,5'-Hexachlorobiphenyl					1.36E-08				
16	106-89-7	1,2-Epoxybutane	7.67E-03	Yes		15	vapor			1.17E-04	8.39E-07		12	1.61E-04	3'4'5'-Pentachlorobiphenyl					1.36E-08				
17	106-91-4	Ethylene glycolate (Diglycidylether)	3.49E-03	Yes	16	16	vapor	2.76E-07	1.61E-06		2.76E-07		13	3.88E-03	3,3',4,4',5-Pentachlorobiphenyl					1.36E-08				
18	106-97-8	Butane	7.67E-03	Yes	26	21	vapor	2.30E-03	3.30E-03		2.30E-03		14	2.52E-04	3,3',4,4',5,5'-Hexachlorobiphenyl					1.36E-08				
19	106-99-0	1,3-Butadiene	7.67E-03	Yes	23	22	vapor	2.30E-03	3.30E-03		2.30E-03		15	1.07E-04	3,3',4,4',5,5',6-Heptachlorobiphenyl					1.36E-08				
20	107-02-8	Acrylon	7.67E-03	Yes		14	vapor			2.52E-04	1.84E-08		16	2.84E-05	3,3',4,4',5,5',6-Octachlorobiphenyl					1.36E-08				
21	107-05-1	3-Chloropropene (Allyl chloride)	7.67E-03	Yes		20	vapor			3.39E-03	2.64E-12		17	7.13E-07										
22	107-06-2	1,2-Dichloroethane (Ethylene chloride)	7.67E-03	Yes		17	vapor			7.72E-07	5.60E-09		18	4.13E-07	1336-36-3	Polychlorinated biphenyls (PCBs)					1.36E-08				
23	107-13-1	Propionitrile	7.67E-03	Yes		13	vapor			3.88E-04	3.54E-08		19	2.77E-08	1336-36-3	(unspecified) (for explosive PCBs)					1.36E-08				
24	107-13-1	Acrylonitrile	7.67E-03	Yes		14	vapor			3.32E-04	1.84E-08		20	3.38E-11										
25	107-18-6	2-Propene-1-ol	3.49E-03	Yes		10	vapor			3.57E-04	1.20E-05		21	3.47E-11										
26	107-51-7	Formic acid, methyl ester	3.49E-03	Yes		10	vapor			1.03E-04	1.73E-08		22	7.45E-17										
27	107-64-4	Dimethylphosphate	3.49E-03	Yes		8	particle			4.88E-07	1.13E-08		23	0.00E+00										
28	107-87-9	2-Pentanone	7.67E-03	Yes		19	vapor			3.52E-04	1.84E-08		24	0.00E+00										
29	108-03-2	1-Nitropropane	3.49E-03	Yes		14	vapor			2.52E-04	9.60E-06		25	0.00E+00										
30	108-05-4	Vinyl acetate	3.49E-03	Yes		16	vapor			2.94E-03	1.03E-06		26	0.00E+00										
31	108-10-1	Hexone (4-Methyl-2-pentanone or MIBK)	7.67E-03	Yes		13	vapor			3.32E-04	1.84E-08		27	0.00E+00										
32	108-20-3	Isopropylether	7.67E-03	Yes		19	vapor			4.31E-07	3.18E-09		28	0.00E+00										
33	108-38-3	m-Xylene (Dimethylbenzene)	7.67E-03	Yes		19	vapor			2.77E-03	2.12E-11		29	1.13E-28										
34	108-39-4	m-Cresol	7.67E-03	Yes		9	vapor			6.10E-05	4.08E-07		30	7.28E-05										
35	108-87-2	Methylcyclohexane	7.67E-03	Yes	20	20	vapor	0.00E+00	0.00E+00		0.00E+00		31	2.29E-04										
36	108-88-3	Toluene	7.67E-03	Yes	19	19	vapor	1.98E-01	2.30E-08		1.98E-01		32	4.06E-04										
37	108-90-7	Chlorobenzene	7.67E-03	Yes		19	vapor			2.77E-03	2.12E-11		33	9.58E-04										
38	108-93-0	Cyclohexanol	7.67E-03	Yes		12	vapor			3.52E-04	7.14E-06		34	7.07E-03										
39	108-94-1	Cyclohexanone	7.67E-03	Yes		17	vapor			2.21E-04	1.79E-09		35	1.82E-03										
40	108-95-2	Phenol	3.49E-03	Yes	4	4	vapor	4.00E-07	1.14E-05		4.00E-07													
41	109-66-0	n-Pentane	7.67E-03	No		2	vapor			1.00E+00	0.00E+00													
42	109-99-9	Tetrahydrofuran	7.67E-03	Yes		13	vapor			3.88E-04	6.42E-08													
43	110-12-3	5-Methyl-2-hexanone	7.67E-03	Yes		19	vapor			1.07E-04	8.28E-07													
44	110-43-0	2-Heptanone	7.67E-03	Yes		19	vapor			7.07E-04	6.29E-07													
45	110-54-3	n-Hexane	7.67E-03	Yes	27	27	vapor	0.00E+00	0.00E+00		0.00E+00													
46	110-82-7	n-Butylcyclohexane	3.49E-03	No		19	vapor			1.02E-04	3.73E-06													
47	110-82-7	Cyclohexane	7.67E-03	Yes	24	24	vapor	0.00E+00	0.00E+00		0.00E+00													
48	110-83-8	Cyclohexene	7.67E-03	Yes		22	vapor			1.43E-03	1.11E-10													
49	110-86-1	Pyridine	3.49E-03	Yes		11	vapor			2.21E-04	7.71E-08													
50	111-65-9	n-Octane	7.67E-03	Yes		20	vapor			0.00E+00	0.00E+00													
51	111-76-2	Ethylene glycol monobutyl ether	3.49E-03	Yes		9	vapor			6.10E-05	2.13E-09													
52	111-84-2	n-Nonane	7.67E-03	Yes	28	28	vapor	0.00E+00	0.00E+00		0.00E+00													
53	117-81-7	Bis(2-ethylhexyl)phthalate (DEHP)	3.49E-03	No		3	particle			7.28E-08	2.03E-08													
54	117-84-0	n-Dioctyl phthalate	3.49E-03	No		3	particle			5.00E-08	1.40E-08													
55	118-74-1	Hexachlorobenzene	7.67E-03	Yes	13	13	vapor	2.14E-12	4.13E-07		2.14E-12													
56	120-12-7	Anthracene	3.49E-03	Yes	13	13	vapor	1.47E-03	1.90E-02		1.47E-03													
57	120-82-1	1,2,4-Trichlorobenzene	7.67E-03	Yes	17	17	vapor	3.60E-03	1.79E-07		3.60E-03													
58	120-83-2	2,4-Dichlorophenol	3.49E-03	Yes		13	vapor			3.57E-04	1.24E-05													
59	121-44-8	Triethylamine	7.67E-03	Yes		13	vapor			1.07E-04	8.28E-07													
60	121-69-7	Dimethylaniline	7.67E-03	Yes		13	vapor			2.98E-05	2.30E-08													
61	122-09-8	N,N-Diphenylamine	7.67E-03	Yes	19	19	vapor	7.75E-07	1.01E-04		7.75E-07													
62	123-19-3	4-Heptanone	7.67E-03	Yes		17	vapor			3.88E-04	3.04E-08													
63	123-86-4	n-Propylacetate	7.67E-03	Yes		19	vapor			1.32E-04	1.04E-08													
64	123-51-3	3-Methyl-1-butanol	7.67E-03	Yes		17	vapor			2.81E-04	2.20E-08													
65	123-91-1	Acetic acid, 1,4-dioxane-2-diyl ester	3.49E-03	Yes		18	vapor			2.84E-04	1.03E-06													
66	123-91-1	1,4-Dioxane	3.49E-03	Yes		18	vapor			3.57E-04	1.47E-06													
67	126-73-8	Tributyl phosphate	3.49E-03	Yes		1	vapor	2.29E-07	4.13E-04		2.29E-07													
68	126-98-7	2-Methyl-2-propenenitrile (Methacrylonitrile)	7.67E-03	Yes		2	vapor			3.88E-04	2.20E-07													
69	127-18-4	Perchloroethylene (tetrachloroethylene)	7.67E-03	Yes	21	21	vapor	1.88E-03	2.47E-11		1.88E-03													
70	127-19-5	N,N-Dimethylacetamide	7.67E-03	Yes		1	vapor			4.88E-07	3.13E-09													
71	129-21-8	1,4-Butanediol dimethylsulfonate	3.49E-03	Yes		13	vapor			6.10E-04	1.03E-06													
72	129-00-0	Pyrene	3.49E-03	Yes	33	33	particle	3.48E-01	9.97E-04		3.48E-01													
73	132-64-9	Dibenzofuran	3.49E-03	Yes		11	particle			2.52E-04	8.60E-06													
74	132-65-0	Thioxanthenone	3.49E-03	Yes		11	vapor			1.07E-04	3.13E-09													
75	132-64-9	Dibenzofuran	3.49E-03	Yes	13	13	vapor	3.73E-04	1.07E-04		3.73E-04													
76	132-65-0	Thioxanthenone	3.49E-03	Yes		11	particle			2.52E-04	8.60E-06													
77	132-65-0	Thioxanthenone	3.49E-03	Yes		11	particle			1.07E-04	3.13E-09													
78	136-36-7	Polychlorinated biphenyls (PCBs)	1.24E-03	Yes	10	3	particle	1.60E-08	1.61E-03		1.60E-08													
79	141-78-6	Acetic acid ethyl ester (Ethyl acetate)	3.49E-03	Yes		1	vapor			2.52E-04	8.60E-06													
80	141-79-7	4-Methyl-3-penten-2-one	3.49E-03	Yes		11	vapor			3.90E-04	1.84E-08													
81	142-82-5	n-Heptane	7.67E-03	Yes		2	vapor			0.00E+00	0.00E+00													
82	144-62-7	Oxalic acid	3.49E-03	Yes	1	1	vapor	2.21E-11	6.60E-08		2.21E-11													
83	156-60-5	trans-1,2-Dichloroethylene	7.67E-03	Yes		2	vapor			3.88E-04	2.20E-07													
84	188-00-8	Thiolane	3.49E-03	Yes		11	particle			2.52E-04	8.60E-06													
85	1634-04-4	Methyl tert-butyl ether	7.67E-03	Yes		11	vapor			2.84E-04	2.20E-07													
86	1836-75-5	Nitrobenzene	3.49E-03	Yes		5	particle			7.28E-08	2.03E-08													
87	188-55-9	Dibenzofuranone	3.49E-03	Yes		1	particle			4.88E-07	1.36E-08													
88	194-59-2	Dibenzofuranone	3.49E-03	Yes		1	particle			4.88E-07	1.36E-08													
89	191-24-2	Benzo(g,h,i)perylene	3.49E-03	Yes		10	particle			7.28E-08	2.03E-08													
90	191-30-0	Benzo(b)fluoranthene	3.49E-03	Yes		1	particle			4.88E-07	1.36E-08													
91	192-97-2	Dibenzo(a,e)pyrene	3.49E-03	Yes		1	particle			4.88E-07	1.36E-08													
92	193-39-5	Indeno(1,2,3-cd)pyrene	3.49E-03	Yes		10	particle			7.28E-08	2.03E-08													
93	205-82-3	Benzo(j)fluoranthene	3.49E-03	Yes		1	particle			5.58E-08	2.29E-07													
94	205-99-2	Benzo(b)fluoranthene	3.49E-03	Yes		10	particle			7.28E-08	2.03E-08													
95	206-44-0	Fluoranthene	3.49E-03	Yes		13	particle			3.13E-04	3.32E-07													
96	207-08-9	Benzo(k)fluoranthene	3.49E-03	Yes		10	particle			7.28E-08	2.03E-08													
97	208-96-8	Acenaphthylene	3.49E-03	Yes	14	14	vapor	6.60E-04	2.32E-04		6.60E-04													
98	218-01-9	Chrysene	3.49E-03	Yes	10	10	particle	1.32E-08	3.32E-04		1.32E-08													
99	224-42-0	Dibenz(a,j)acridine	3.49E-03	Yes		1	particle			2.52E-04	8.60E-06													
100	224-43-0	Dibenz(a,h)acridine	3.49E-03	Yes		1	particle			4.88E-07	1.36E-08													
101	226-36-8	Dibenz(a,h)acridine	3.49E-03	Yes		1	particle			5.58E-08	2.29E-07													
102	230-27-3	Indan	3.49E-03	Yes		1	vapor			7.72E-07	2.60E-09													
103	2051-18-7	Trimethylbenzene	7.67E-03	Yes		19	vapor			2.77E-03	2.12E-11													
104	2216-40-3	Triphenylene	3.49E-03	Yes		1	particle			2.21E-04	7.73E-06													
105	2131-24-3	Tetramethylurethane	7.67E-03	Yes		13	vapor			1.00E+00	1.00E+00													
106	247-93-3	Cyclopentane	7.67E-03	Yes		20	vapor			3.00E+00	3.00E+00													
107	309-00-2	Aldrin	3.49E-03	Yes	34	34	particle	8.88E-07	2.31E-03		8.88E-07													
108	319-84-6	Hexachlorocyclohexane (Lindane) Alpha (BHC)	1.46E-04	Yes		13	vapor			3.32E-04	1.11E-07													
109	319-85-7	Hexachlorocyclohexane (Lindane) Beta (BHC)	1.46E-04	Yes	10	10	particle	4.17E-08	7.20E-05		4.17E-08													
110	319-86-8	Delta-BHC	1.46E-04	Yes		10	particle			7.28E-08	9.44E-08													
111	3697-24-3	5-Methylchrysene	3.49E-03	Yes		10	particle			4.88E-07	1.40E-07													
112	3825-26-1	Ammonium perfluorooctanoate	3.49E-03	Yes		14	particle			2.52E-04	8.60E-06													
113	411-76-4	2-Butoxyethyl-2-butene (Butoxyethyl butene)	7.67E-03	Yes	11	11	vapor	1.11E-04	2.20E-04		1.11E-04													
114	465-73-6	Isodrin	3.49E-03	Yes		15	vapor			1.61E-07	1.76E-07													
115	50-00-0	Formaldehyde	7.67E-03	Yes		8	vapor			4.10E-05	3.14E-07													
116	50-29-3	4,4-DDT	3.49E-03	Yes		11	particle			3.52E-04	2.23E-07													
117	50-32-8	Benzo(a)pyrene	3.49E-03	Yes	10	10	particle	3.24E-08	7.32E-03		3.24E-08													
118	53-70-3	Dibenz(a,h)anthracene	3.49E-03	Yes		7	particle			8.58E-08	1.82E-10													
119	540-59-0	1,2-Dichloroethylene	7.67E-03	Yes		1	vapor			2.77E-08	2.12E-11													
120	560-64-5	2,3,4-Trimethylpentane	7.67E-03	Yes		20	vapor			1.00E+00	1.00E+00													
121	561-73-1	1,1-Dichloroethylene	7.67E-03	Yes		10	vapor			2.77E-08	2.12E-10													
122	56-23-5	Carbon tetrachloride	7.67E-03	Yes	11	11	vapor	1.11E-04	1.45E-11		1.11E-04													
123	563-80-4	3-Methyl-2-butanone	7.67E-03	Yes		14	vapor			2.52E-04	1.84E-08													
124	56-49-5	3-Methylcholanthrene	3.49E-03	Yes		28	particle			1.00E+00	1.00E+00													
125	56-55-3	Benzo(a)anthracene	3.49E-03	Yes		11	particle			3.52E-04	2.23E-07													
126	57-14-7	1,1-Dimethylhydrazine	3.49E-03	Yes	12	12	vapor	8.11E-04	2.31E-04		8.11E-04													
127	59-89-9	Lasiocarpine (C-Lasiocarpine)	1.16E-03	Yes	22	22	particle	8.58E-08	3.32E-04		8.58E-08													
128	59-90-2	2,3,4,6-Tetrachlorophenol	3.49E-03	Yes	11	11	vapor	7.28E-08	2.08E-04		7.28E-08													
129	591-78-6	2-Hexanone	7.67E-03	Yes		14	vapor			2.52E-04	1.84E-08													
130	59-50-7	4-Chloro-3-methylphenol	3.49E-03	Yes		32	particle			4.88E-07	1.40E-08													
131	60-35-5	Acetamide	3.49E-03	Yes		5	vapor			1.31E-08	2.73E-08													
132	60-57-1	Dieldrin	3.49E-03	Yes		1	vapor			4.10E-08	2.13E-04													
133	60-34-4	Methylhydrazine	3.49E-03	Yes	22	22	vapor	3.83E-08	1.43E-04		3.83E-08													
134	60-35-5	Acetamide	7.67E-03	Yes		1	vapor			2.77E-07	2.60E-09													
135	60-57-1	Dieldrin	3.49E-03	Yes	33	33	particle	2.11E-07	4.50E-04		2.11E-07													
136	621-64-7	Di-n-Propylnitrosamine (N-Nitrosodipropylamine)	3.49E-03	Yes		10	vapor			3.57E-04	1.24E-05													
137	624-83-9	Methyl isocyanate	7.67E-03	Yes		17	vapor			7.72E-07	5.60E-09													
138	631-19-8	Ethyl acid, propyl ester	3.49E-03	Yes		17	vapor			7.72E-07	2.60E-09													
139	62-75-9	N-nitroso-N,N-dimethylamine (Dimethylnitrosamine)	3.51E-03	Yes	8	8	vapor	3.07E-08	6.10E-05		3.07E-08													
140	630-20-6	1,1,1,2-Tetrachloroethane	7.67E-03	Yes		11	vapor			4.31E-07	3.18E-09													
141	64-17-5	Ethyl alcohol	7.67E-03	No		14	vapor			3.52E-04	2.54E-08													
142	64-18-6	Formic acid	3.49E-03	No		11	vapor			6.88E-08	2.29E-07													
143	64-19-7	Acetic acid	3.49E-03	No		1	vapor			1.07E-04	1.73E-08													
144	67-56-1	Methyl alcohol (Methanol)	7.67E-03	No		12	vapor			3.57E-04	2.54E-08													
145	67-63-0	2-Propyl alcohol (Isopropanol, Propan-2-ol)	7.67E-03	No		11	vapor			2.21E-04	1.79E-08													
146	67-64-1	2-Propanone (Acetone)	4.19E-03	No		11	vapor			3.84E-04	1.04E-08													
147	67-66-3	Chloroform	7.67E-03	Yes		11	vapor			2.77E-08	2.12E-10													
148	67-72-1	Hexachloroethane	3.49E-03	Yes		11	vapor			2.77E-08	2.12E-10													
149	68-11-2	Thioglycolic acid	7.67E-03	Yes		11	vapor			2.21E-04	1.79E-08													
150	71-23-8	n-Propyl alcohol	7.67E-03	Yes		11	vapor			2.21E-04	1.79E-08													
151	71-36-3	n-Butyl alcohol	7.67E-03	Yes		11	vapor			2.21E-04	1.79E-08													
152	71-43-2	Benzene	7.67E-03	Yes	19	19	vapor	3.86E-11	4.37E-06		3.86E-11													
153	71-55-6	Methylchloroform (1,1,1-Trichloroethane)	7.67E-03	Yes		2	vapor			2.21E-11	1.79E-11													
154	72-20-8	Endrin	3.49E-03	Yes		10	particle			4.88E-08	9.11E-08													
155	72-43-5	Methoxychlor	3.49E-03	Yes		9	particle			5.58E-08	7.60E-09													
156	72-54-8	4,4-DDD	3.49E-03	Yes		11	particle			4.88E-08	9.11E-08													
157	72-55-9	4,4-DDE	3.49E-03	Yes		10	particle			3.13E-08	4.80E-07													
158	74-83-9	Bromomethane (Methyl bromide)	7.67E-03	Yes		1	vapor			2.77E-08	2.12E-10													
159	74-87-3	Chloromethane (Methyl chloride)	7.67E-03	Yes		20	vapor			1.00E+00	1.00E+00													
160	74-93-1	Methylmercaptan	7.67E-03	Yes		17	vapor			7.72E-07	5.60E-09													
161	74-96-4	Ethylbromide	3.49E-03	Yes		20	vapor			1.00E+00	1.00E+00													
162	75-01-4	Vinylchloride (Chloroethene)	7.67E-03	Yes		20	vapor			1.00E+00	1.00E+00													
163	75-05-8	Acetonitrile	3.49E-03	Yes	11	11	vapor	3.84E-04	4.00E-04		3.84E-04													
164	75-07-0	Acetaldehyde	3.49E-03	Yes		1	vapor			3.84E-04	2.60E-08													
165	75-09-2	Dichloromethane (Methylene chloride)	3.49E-03	Yes		10	vapor			2.77E-08	2.12E-10													
166	75-15-0	Carbon disulfide	7.67E-03	Yes	4	4	vapor	2.11E-08	6.88E-08		2.11E-08													
167	75-21-8	Ethylene oxide (Oxirane)	7.67E-03	Yes		20	vapor			3.31E-03	3.60E-12													
168	75-27-4	Bromodichloromethane	7.67E-03	Yes		19	vapor			1.01E-04	8.00E-07													
169	75-34-3	1,1-Dichloroethane	7.67E-03	Yes		19	vapor			4.31E-07	3.18E-09													
170	75-35-4	1,1-Dichloroethylene (Vinylidene chloride)	7.67E-03	Yes		20	vapor			2.77E-08	2.12E-10													
171	75-43-4	Dichlorofluoromethane	7.67E-03	Yes		20	vapor			1.00E+00	1.00E+00													
172	75-45-6	Chlorodifluoromethane	7.67E-03	No		20	vapor			1.00E+00	1.00E+00													
173	75-50-3	Trimethylamine	7.67E-03	No		14	vapor			3.52E-04	1.84E-08													
174	75-52-5	Nitromethane	3.49E-03	Yes		11	vapor			3.90E-04	1.84E-08													
175	75-55-8	2-Methylaziridine	3.49E-03	Yes		11	vapor			2.21E-04	7.73E-06													
176	75-61-6	Dibromodifluoromethane	7.67E-03	Yes		22	vapor			1.00E+00	1.00E+00													
177	75-63-8	Trifluorobromomethane	7.67E-03	Yes		22	vapor			1.00E+00	1.00E+00													
178	75-65-0	2-Methyl-2-propanol	7.67E-03	Yes		1	vapor			2.21E-04	1.79E-08													
179	75-69-4	Trichlorofluoromethane	7.67E-03	Yes		21	vapor			1.

CALCULATION SHEET

BY: F. Dessie
DATE: 05/21/03

PROJECT: WTP
JOB NO: 24590
CALC NO: 24590-WTP-MEC-PEF-00008
SHEET REV: A
SHEET NO: 96

	A	B	C	D	E	F	G	H	I	J	K	L	M	N	O	P	Q	R	S	T	U	V	W
1	Table B-10 HOP10 - H$_2$W Vessel Ventilation																						
2			Feed Rate					HOP10 rate	Performance	Adjusted	Calc'd rate												
3	CAS #	COPC	g/sec	in ACM	Group	Grouping	Phase	g/sec	Factor	PF	g/sec		Adjusted Performance Factors										
200	79-34-5	1,1,2,2-Tetrachloroethane	7.67E-03	No		18	vapor			3.94E-05	3.26E-07												
201	8001-35-2	Toxaphene	3.87E-04	Yes	10	16	particle	1.64E-07	5.13E-04		1.64E-07												
202	87-68-3	Pentachlorobutadiene (PCBD or perchlorobutadiene)	3.49E-03	Yes		13	vapor			3.94E-04	1.38E-06												
203	83-32-9	Acenaphthene	3.49E-03	No		15	vapor			1.07E-04	3.73E-06												
204	84-66-2	Diethyl phthalate	3.49E-03	Yes	8	8	vapor	8.55E-07	2.45E-06		8.55E-07												
205	84-74-2	Dibutyl phthalate	3.49E-03	Yes	21	34	particle	8.00E-06	2.29E-04		8.00E-06												
206	85-01-8	Phenanthrene	3.49E-03	No		13	vapor			3.96E-04	1.38E-05												
207	85-68-7	Butylbenzyl phthalate	3.49E-03	No		34	particle			2.29E-04	8.00E-06												
208	86-73-7	Fluorene	3.49E-03	No		14	particle			2.50E-04	8.80E-06												
209	87-68-3	Hexachlorobutadiene	7.67E-03	Yes	22	22	vapor	2.31E-12	3.02E-10		2.31E-12												
210	87-86-5	Pentachlorophenol	3.49E-03	Yes	6	6	vapor	3.72E-08	1.07E-06		3.72E-08												
211	88-06-2	2,4,6-Trichlorophenol	3.49E-03	No		14	vapor			3.57E-04	1.24E-05												
212	88-73-3	2-Nitrotoluene	7.67E-03	No		1	vapor			2.61E-04	2.00E-06												
213	88-75-5	2-Nitrophenol	3.49E-03	No		1	vapor			2.61E-04	9.11E-06												
214	88-85-7	2-sec-Butyl-4,6-dinitrophenol (Dinoseb)	3.49E-03	Yes	8	8	particle	2.94E-08	8.02E-06		2.94E-08												
215	88-99-1	Picric acid	3.49E-03	Yes	2	2	particle	1.14E-10	3.27E-08		1.14E-10												
216	91-20-3	Naphthalene	1.16E-03	Yes	16	16	vapor	2.70E-08	2.33E-06		2.70E-08												
217	91-22-5	Quinoline	3.49E-03	No		8	vapor			8.10E-06	2.13E-06												
218	91-58-7	2-Chloronaphthalene	3.49E-03	No		14	vapor			2.94E-05	1.03E-06												
219	92-52-4	1,1'-Biphenyl	3.49E-03	No		14	vapor			2.94E-05	1.03E-06												
220	92-93-3	4-Nitrophenol	3.49E-03	No		1	particle			3.57E-04	1.24E-06												
221	93-72-1	Silvex (2,4,5-TP)	3.49E-03	No		5	particle			4.96E-07	1.70E-06												
222	93-76-5	2,4,5-T	3.49E-03	No		5	particle			4.96E-07	1.70E-06												
223	94-75-7	2,4-D and esters (1600 typed)	3.49E-03	No		8	vapor			3.07E-06	1.07E-06												
224	95-13-6	Indene	3.49E-03	No		18	vapor			6.31E-07	1.90E-06												
225	95-47-6	o-Xylene	7.67E-03	No		18	vapor			3.77E-08	2.12E-10												
226	95-48-7	o-Cresol (2-Methylphenol)	7.67E-03	No		1	vapor			6.10E-06	4.68E-07												
227	95-49-8	2-Chlorotoluene	3.49E-03	No		18	vapor			3.77E-08	5.68E-10												
228	95-50-1	o-Dichlorobenzene (1,2-Dichlorobenzene)	7.67E-03	No		18	vapor			4.31E-07	3.30E-09												
229	95-57-8	2-Chlorophenol	3.49E-03	No		1	vapor			2.21E-04	7.71E-06												
230	95-95-4	2,4,5-Trichlorophenol	3.49E-03	No		8	vapor			6.10E-06	2.13E-06												
231	96-22-0	3-Pentanone	7.67E-03	No		14	vapor			2.53E-04	1.94E-06												
232	98-66-5	Bis(1,1-dimethyl-4-hydroxy-5-methylphenyl)sulfide	3.49E-03	No		18	particle			3.77E-08	6.68E-10												
233	98-82-8	p-cumylphenol	3.49E-03	No		23	vapor			2.47E-11	8.61E-13												
234	98-82-8	Cumene	3.49E-03	No		23	vapor			3.26E-10	1.18E-11												
235	98-83-9	alpha-Methylstyrene	7.67E-03	No		18	vapor			3.77E-08	2.12E-10												
236	98-86-2	Acetophenone	3.49E-03	Yes	11	11	vapor	8.10E-06	2.32E-04		8.10E-06												
237	98-95-3	Nitrobenzene	3.49E-03	No		12	vapor			2.61E-04	9.11E-06												
240											7.81E-04												

CALCULATION SHEET

BY: E. Berrios
DATE: 05/21/03

PROJECT: WTP
JOB NO.: 24590
CALC NO.: 24590-WTP-M4C-FRP-00005
SHEET REV: A
SHEET NO: 97

	A	B	C	D	E	F	G	H	I	J	K	L	M	N	O	P
1	Table B-11 HOP33 - Abated HLW Melter Offgas System															
2				HMP06	SBS	WESP	HOP07	HOP10	HOP11	HEME	HEPA 1	HEPA 2	VOC Ox	HOP33		
3	CAS #	COPC	Grouping	g/sec	DF	DF	g/sec	g/sec	g/sec	DF	DF	DF	DF	g/sec		
4	100-00-5	p-Nitrochlorobenzene	10	5.03E-03	1	1	5.03E-03	1.24E-05	5.04E-03	1	1	1	20	2.52E-04	2.25E-04	
5	100-21-0	p-Phthalic acid	1	6.81E-03	1	1	6.81E-03	1.56E-11	6.81E-03	1	1	1	20	3.41E-04	3.36E-04	
6	100-25-4	1,4-Dinitrobenzene	6	6.86E-03	40	11	1.56E-05	3.72E-08	1.56E-05	90	2000	100	20	4.34E-14	3.39E-04	
7	100-41-4	Ethyl benzene	20	1.17E-12	1	1	1.17E-12	2.60E-12	3.77E-12	1	1	1	20	1.89E-13	1.75E-13	
8	100-42-5	Styrene	19	3.39E-10	1	1	3.39E-10	2.12E-10	5.51E-10	1	1	1	20	2.75E-11	2.56E-11	
9	10061-01-5	cis-1,3-Dichloropropene	19	9.78E-10	1	1	9.78E-10	5.86E-10	1.57E-09	1	1	1	20	7.83E-11	7.27E-11	
10	10061-02-8	trans-1,3-Dichloropropene	17	1.88E-08	1	1	1.88E-08	5.92E-09	2.47E-08	1	1	1	20	1.24E-09	1.15E-09	
11	101-55-3	4-Bromophenylphenyl ether	14	3.50E-04	1	1	3.50E-04	8.80E-06	3.59E-04	1	1	1	20	1.80E-05	1.73E-05	
12	101-84-8	Diphenyl ether	16	2.99E-06	1	1	2.99E-06	2.26E-07	3.21E-06	1	1	1	20	1.61E-07	1.52E-07	
13	106-35-4	3-Heptanone	14	7.71E-05	1	1	7.71E-05	1.94E-06	7.90E-05	1	1	1	20	3.95E-06	3.80E-06	
14	106-42-3	p-Xylene (Dimethyl benzene)	19	3.39E-10	1	1	3.39E-10	2.12E-10	5.51E-10	1	1	1	20	2.75E-11	2.56E-11	
15	106-46-7	1,4-Dichlorobenzene	18	8.79E-09	1	1	8.79E-09	3.30E-09	1.21E-08	1	1	1	20	6.05E-10	5.63E-10	
16	106-88-7	1,2-Epoxybutane	15	1.74E-05	1	1	1.74E-05	8.20E-07	1.82E-05	1	1	1	20	9.10E-07	8.67E-07	
17	106-93-4	Ethylene dibromide (Dibromoethane)	16	1.87E-06	1	1	1.87E-06	2.76E-07	2.14E-06	1	1	1	20	1.07E-07	1.01E-07	
18	106-97-8	Butane	26	0.00E+00	1	1	0.00E+00	0.00E+00	0.00E+00	1	1	1	20	0.00E+00	0.00E+00	
19	106-99-0	1,3-Butadiene	23	0.00E+00	1	1	0.00E+00	0.00E+00	0.00E+00	1	1	1	20	0.00E+00	0.00E+00	
20	107-02-8	Acrolein	14	7.71E-05	1	1	7.71E-05	1.94E-06	7.90E-05	1	1	1	20	3.95E-06	3.80E-06	
21	107-05-1	3-Chloropropene (Allyl chloride)	20	1.17E-12	1	1	1.17E-12	2.60E-12	3.77E-12	1	1	1	20	1.89E-13	1.75E-13	
22	107-06-2	1,2-Dichloroethane (Ethylene chloride)	17	1.88E-08	1	1	1.88E-08	5.92E-09	2.47E-08	1	1	1	20	1.24E-09	1.15E-09	
23	107-12-0	Propionitrile	13	3.23E-04	1	1	3.23E-04	3.04E-06	3.27E-04	1	1	1	20	1.63E-05	1.59E-05	
24	107-13-1	Acrylonitrile	14	7.71E-05	1	1	7.71E-05	1.94E-06	7.90E-05	1	1	1	20	3.95E-06	3.80E-06	
25	107-18-6	2-Propene-1-ol	10	5.03E-03	1	1	5.03E-03	1.24E-05	5.04E-03	1	1	1	20	2.52E-04	2.25E-04	
26	107-31-3	Formic acid, methyl ester	15	7.80E-05	1	1	7.80E-05	3.73E-06	8.27E-05	1	1	1	20	4.14E-06	3.94E-06	
27	107-66-4	Dibutylphosphate	5	6.86E-03	40	11	1.56E-05	1.70E-08	1.56E-05	90	2000	100	20	4.34E-14	3.39E-04	
28	107-87-9	2-Pentanone	14	7.71E-05	1	1	7.71E-05	1.94E-06	7.90E-05	1	1	1	20	3.95E-06	3.80E-06	
29	108-03-2	1-Nitropropane	14	3.50E-04	1	1	3.50E-04	8.80E-06	3.59E-04	1	1	1	20	1.80E-05	1.73E-05	
30	108-05-4	Vinyl acetate	16	1.36E-05	1	1	1.36E-05	1.03E-06	1.46E-05	1	1	1	20	7.31E-07	6.92E-07	
31	108-10-1	Hexone (4-Methyl-2-pentanone or MIBK)	14	7.71E-05	1	1	7.71E-05	1.94E-06	7.90E-05	1	1	1	20	3.95E-06	3.80E-06	
32	108-20-3	Bis(isopropyl)ether	18	8.79E-09	1	1	8.79E-09	3.30E-09	1.21E-08	1	1	1	20	6.05E-10	5.63E-10	
33	108-38-3	m-Xylene (Dimethyl benzene)	19	3.39E-10	1	1	3.39E-10	2.12E-10	5.51E-10	1	1	1	20	2.75E-11	2.56E-11	
34	108-39-4	m-Cresol	9	1.16E-03	1	1	1.16E-03	4.68E-07	1.16E-03	1	1	1	20	5.82E-05	5.75E-05	
35	108-87-2	Methylcyclohexane	25	0.00E+00	1	1	0.00E+00	0.00E+00	0.00E+00	1	1	1	20	0.00E+00	0.00E+00	
36	108-88-3	Toluene	19	1.06E-11	1	1	1.06E-11	1.56E-11	2.63E-11	1	1	1	20	1.31E-12	1.22E-12	
37	108-90-7	Chlorobenzene	19	3.39E-10	1	1	3.39E-10	2.12E-10	5.51E-10	1	1	1	20	2.75E-11	2.56E-11	
38	108-93-0	Cyclohexanol	10	1.11E-03	1	1	1.11E-03	2.74E-06	1.11E-03	1	1	1	20	5.54E-05	4.96E-05	
39	108-94-1	Cyclohexanone	11	7.96E-04	1	1	7.96E-04	1.70E-06	7.98E-04	1	1	1	20	3.99E-05	3.93E-05	
40	108-95-2	Phenol	8	6.71E-03	1	1	6.71E-03	4.95E-07	6.71E-03	1	1	1	20	3.36E-04	3.32E-04	
41	109-66-0	n-Pentane	26	0.00E+00	1	1	0.00E+00	0.00E+00	0.00E+00	1	1	1	20	0.00E+00	0.00E+00	
42	109-99-9	Tetrahydrofuran	13	6.86E-04	1	1	6.86E-04	6.45E-06	6.93E-04	1	1	1	20	3.46E-05	3.38E-05	
43	110-12-3	5-Methyl-2-hexanone	15	1.74E-05	1	1	1.74E-05	8.20E-07	1.82E-05	1	1	1	20	9.10E-07	8.67E-07	
44	110-43-0	2-Heptanone	15	1.74E-05	1	1	1.74E-05	8.20E-07	1.82E-05	1	1	1	20	9.10E-07	8.67E-07	
45	110-54-3	n-Hexane	27	0.00E+00	1	1	0.00E+00	0.00E+00	0.00E+00	1	1	1	20	0.00E+00	0.00E+00	
46	110-62-3	n-Valeraldehyde	15	7.90E-05	1	1	7.90E-05	3.73E-06	8.27E-05	1	1	1	20	4.14E-06	3.94E-06	
47	110-82-7	Cyclohexane	24	0.00E+00	1	1	0.00E+00	0.00E+00	0.00E+00	1	1	1	20	0.00E+00	0.00E+00	
48	110-83-8	Cyclohexene	22	1.83E-20	1	1	1.83E-20	1.11E-19	1.29E-19	1	1	1	20	6.47E-21	2.13E-15	
49	110-86-1	Pyridine	11	3.62E-03	1	1	3.62E-03	7.71E-06	3.63E-03	1	1	1	20	1.81E-04	1.79E-04	
50	111-65-9	n-Octane	28	0.00E+00	1	1	0.00E+00	0.00E+00	0.00E+00	1	1	1	20	0.00E+00	0.00E+00	
51	111-76-2	Ethylene glycol monobutyl ether	9	5.29E-03	1	1	5.29E-03	2.13E-06	5.29E-03	1	1	1	20	2.65E-04	2.61E-04	
52	111-84-2	n-Nonane	28	0.00E+00	1	1	0.00E+00	0.00E+00	0.00E+00	1	1	1	20	0.00E+00	0.00E+00	
53	117-81-7	Bis(2-ethylhexyl)phthalate (DEHP)	30	8.50E-03	40	11	1.93E-05	2.53E-06	2.18E-05	90	2000	100	20	6.07E-14	7.17E-14	
54	117-84-0	n-Dioctyl phthalate	32	4.97E-03	40	11	1.13E-05	1.40E-05	2.53E-05	90	2000	100	20	7.01E-14	8.54E-14	
55	118-74-1	Hexachlorobenzene	18	8.26E-10	1	1	8.26E-10	3.10E-10	1.14E-09	1	1	1	20	6.68E-11	5.29E-11	
56	120-12-7	Anthracene	13	1.11E-03	1	1	1.11E-03	1.37E-05	1.12E-03	1	1	1	20	5.62E-05	5.47E-05	
57	120-82-1	1,2,4-Trichlorobenzene	17	1.88E-08	1	1	1.88E-08	5.92E-09	2.47E-08	1	1	1	20	1.24E-09	1.15E-09	
58	120-83-2	2,4-Dichlorophenol	10	5.03E-03	1	1	5.03E-03	1.24E-05	5.04E-03	1	1	1	20	2.52E-04	2.25E-04	
59	121-44-8	Triethylamine	15	1.74E-05	1	1	1.74E-05	8.20E-07	1.82E-05	1	1	1	20	9.10E-07	8.67E-07	
60	121-69-7	Dimethylaniline	13	3.23E-04	1	1	3.23E-04	3.04E-06	3.27E-04	1	1	1	20	1.63E-05	1.59E-05	
61	122-39-4	N,N-Diphenylamine	10	1.03E-03	1	1	1.03E-03	7.75E-07	1.03E-03	1	1	1	20	5.17E-05	5.11E-05	
62	123-19-3	4-Heptanone	13	3.23E-04	1	1	3.23E-04	3.04E-06	3.27E-04	1	1	1	20	1.63E-05	1.59E-05	
63	123-38-6	n-Propionaldehyde	14	7.71E-05	1	1	7.71E-05	1.94E-06	7.90E-05	1	1	1	20	3.95E-06	3.80E-06	
64	123-51-3	3-Methyl-1-butanol	12	7.28E-04	1	1	7.28E-04	2.00E-06	7.30E-04	1	1	1	20	3.65E-05	3.59E-05	
65	123-86-4	Acetic acid n-butyl ester	18	1.36E-05	1	1	1.36E-05	1.03E-06	1.46E-05	1	1	1	20	7.31E-07	6.92E-07	
66	123-91-1	1,4-Dioxane	10	3.02E-03	1	1	3.02E-03	7.47E-06	3.02E-03	1	1	1	20	1.51E-04	1.35E-04	
67	126-73-8	Tributyl phosphate	7	6.90E-03	1	1	6.90E-03	2.29E-07	6.90E-03	1	1	1	20	3.45E-04	7.82E-14	
68	126-98-7	2-Methyl-2-propenenitrile (Methacrylonitrile)	16	2.99E-06	1	1	2.99E-06	2.26E-07	3.21E-06	1	1	1	20	1.61E-07	1.52E-07	
69	127-18-4	Perchloroethylene (tetrachloroethylene)	21	4.81E-14	1	1	4.81E-14	1.89E-13	2.38E-13	1	1	1	20	1.19E-14	1.09E-14	
70	127-19-5	N,N-Dimethylacetamide	5	1.51E-03	1	1	1.51E-03	3.73E-09	1.51E-03	1	1	1	20	7.55E-05	7.45E-05	
71	128-37-0	2,6-Bis(tert-butyl)-4-methylphenol	32	4.97E-03	1	1	4.97E-03	1.40E-05	4.98E-03	1	1	1	20	2.49E-04	8.54E-14	
72	129-00-0	Pyrene	33	4.37E-03	40	11	9.94E-06	3.46E-05	4.47E-05	90	2000	100	20	1.24E-13	1.23E-13	
73	1321-64-8	Pentachloronaphthalene	14	3.50E-04	40	11	7.96E-07	8.80E-06	9.60E-06	90	2000	100	20	2.67E-14	6.49E-13	6.23E-13
74	1321-65-9	Trichloronaphthalene	16	7.90E-05	1	1	7.90E-05	3.73E-08	8.27E-05	1	1	1	20	4.14E-06	1.48E-13	-4.14E-06
75	132-64-9	Dibenzofuran	15	7.90E-05	1	1	7.90E-05	3.73E-06	8.27E-05	1	1	1	20	4.14E-06	3.94E-06	
76	1335-87-1	Hexachloronaphthalene	14	3.50E-04	40	11	7.96E-07	8.80E-06	9.60E-06	90	2000	100	20	2.67E-14	6.49E-13	6.23E-13
77	1335-88-2	Tetrachloronaphthalene	15	7.90E-05	40	11	1.80E-07	3.73E-06	3.91E-06	90	2000	100	20	1.08E-14	1.48E-13	1.37E-13
78	1336-36-3	Polychlorinated biphenyls (PCBs)	35	6.62E-05	40	11	1.51E-07	1.93E-05	1.95E-05	90	2000	100	20	5.41E-14	5.25E-14	
79	141-78-6	Acetic acid ethyl ester (Ethyl acetate)	14	3.50E-04	1	1	3.50E-04	8.80E-06	3.59E-04	1	1	1	20	1.80E-05	1.73E-05	
80	141-79-7	4-Methyl-3-penten-2-one	13	1.47E-03	1	1	1.47E-03	1.38E-05	1.48E-03	1	1	1	20	7.42E-05	7.25E-05	
81	142-82-5	n-Heptane	27	0.00E+00	1	1	0.00E+00	0.00E+00	0.00E+00	1	1	1	20	0.00E+00	0.00E+00	
82	144-62-7	Oxalic acid	3	6.83E-04	1	1	6.83E-04	2.31E-11	6.83E-04	1	1	1	20	3.41E-05	3.37E-05	
83	156-60-5	trans-1,2-Dichloroethylene	20	1.17E-12	1	1	1.17E-12	2.60E-12	3.77E-12	1	1	1	20	1.89E-13	1.75E-13	
84	1582-09-8	Trifluralin	14	3.50E-04	40	11	7.96E-07	8.80E-06	9.60E-06	90	2000	100	20	2.67E-14	6.49E-13	6.23E-13
85	1634-04-4	Methyl tert-butyl ether	16	2.99E-06	1	1	2.99E-06	2.26E-07	3.21E-06	1	1	1	20	1.61E-07	1.52E-07	
86	1836-75-5	Nitrofen	30	8.50E-03	40	11	1.93E-05	2.53E-06	2.18E-05	90	2000	100	20	6.07E-14	7.17E-14	
87	189-55-9	Dibenzo[a,i]pyrene	5	6.86E-03	40	11	1.56E-05	1.70E-08	1.56E-05	90	2000	100	20	4.34E-14	1.27E-11	1.27E-11
88	189-64-0	Dibenzo[a,h]pyrene	5	6.86E-03	40	11	1.56E-05	1.70E-08	1.56E-05	90	2000	100	20	4.34E-14	1.27E-11	1.27E-11
89	191-24-2	Benzo(g,h,i)perylene	30	8.50E-03	40	11	1.93E-05	2.53E-08	2.18E-05	90	2000	100	20	6.07E-14	7.17E-14	
90	191-30-0	Benzo[a,l]pyrene	5	6.86E-03	40	11	1.56E-05	1.70E-08	1.56E-05	90	2000	100	20	4.34E-14	1.27E-11	1.27E-11
91	192-65-4	Dibenzo[a,e]pyrene	5	6.86E-03	40	11	1.56E-05	1.70E-08	1.56E-05	90	2000	100	20	4.34E-14	1.27E-11	1.27E-11
92	193-39-5	Indeno(1,2,3-cd)pyrene	30	8.50E-03	40	11	1.93E-05	2.53E-08	2.18E-05	90	2000	100	20	6.07E-14	7.17E-14	
93	205-82-3	Benzo(j)fluoranthene	7	6.90E-03	40	11	1.57E-05	2.29E-07	1.59E-05	90	2000	100	20	4.42E-14	7.62E-14	
94	205-99-2	Benzo(b)fluoranthene	30	8.50E-03	40	11	1.93E-05	2.53E-08	2.18E-05	90	2000	100	20	6.07E-14	7.17E-14	
95	206-44-0	Fluoranthene	33	4.58E-03	40	11	1.04E-05	3.32E-05	4.36E-05	90	2000	100	20	1.21E-13	1.22E-13	
96	207-08-9	Benzo(k)fluoranthene	30	8.50E-03	40	11	1.93E-05	2.53E-06	2.18E-05	90	2000	100	20	6.07E-14	7.17E-14	
97	208-96-8	Acenaphthylene	14	3.50E-04	1	1	3.50E-04	8.80E-06	3.59E-04	1	1	1	20	1.80E-05	1.73E-05	
98	218-01-9	Chrysene	32	5.26E-03	40	11	1.20E-05	1.83E-05	3.02E-05	90	2000	100	20	8.40E-14	8.33E-14	
99	2234-13-1	Octachloronaphthalene	14	3.50E-04	40	11	7.96E-07	8.80E-06	9.60E-06	90	2000	100	20	2.67E-14	6.49E-13	6.23E-13
100	224-42-0	Dibenz[a,j]acridine	4	8.80E-03	40	11	1.55E-05	2.11E-09	1.55E-05	90	2000	100	20	4.30E-14	1.26E-11	1.26E-11
101	226-36-8	Dibenz[a,h]acridine	4	8.80E-03	40	11	1.55E-05	2.11E-09	1.55E-05	90	2000	100	20	4.30E-14	1.26E-11	1.26E-11
102	2385-85-5	Mirex	17	8.55E-08	1	1	8.55E-08	2.66E-08	1.12E-07	1	1	1	20	5.62E-09	1.97E-16	-5.62E-09
103	25551-13-7	Trimethyl benzene	19	3.39E-10	1	1	3.39E-10	2.12E-10	5.51E-10	1	1	1	20	2.75E-11	2.56E-11	
104	26140-60-3	Terphenyls	34	2.45E-03	40	11	5.56E-06	7.20E-05	7.76E-05	90	2000	100	20	2.15E-13	2.14E-13	
105	27154-33-2	Trichlorofluoroethane	23	0.00E+00	1	1	0.00E+00	0.00E+00	0.00E+00	1	1	1	20	0.00E+00	0.00E+00	
106	287-92-3	Cyclopentane	24	0.00E+00	1	1	0.00E+00	0.00E+00	0.00E+00	1	1	1	20	0.00E+00	0.00E+00	
107	309-00-2	Aldrin	34	3.02E-05	40	11	6.86E-08	8.88E-07	9.57E-07	90	2000	100	20	2.66E-15	2.64E-15	
108	319-84-6	Hexachlorocyclohexane (Lindane) Alpha BHC	33	1.53E-05	1	1	1.53E-05	1.11E-07	1.54E-05	1	1	1	20	7.68E-07	4.05E-16	
109	319-85-7	Hexachlorocyclohexane (Lindane) Beta BHC	30	2.86E-05	40	11	6.50E-08	8.37E-08	7.34E-08	90	2000	100	20	2.04E-16	2.44E-16	
110	319-86-8	Delta-BHC	30	2.83E-05	40	11	6.44E-08	8.44E-09	7.28E-08	90	2000	100	20	2.02E-16	2.39E-16	
111	3697-24-3	5-Methylchrysene	32	4.97E-03	40	11	1.13E-05	1.40E-05	2.53E-05	90	2000	100	20	7.01E-14	8.54E-14	
112	3825-26-1	Ammonium perfluorooctanoate	14	3.50E-04	40	11	7.96E-07	8.80E-06	9.60E-06	90	2000	100	20	2.67E-14	6.49E-13	6.23E-13
113	4170-30-3	2-Butenaldehyde (2-Butenal or Crotonaldehyde)	11	7.96E-04	1	1	7.96E-04	1.71E-06	7.98E-04	1	1	1	20	3.99E-05	3.93E-05	
114	465-73-6	Isodrin	35	1.29E-06	1	1	1.29E-06	3.76E-07	1.66E-06	1	1	1	20	8.30E-08	1.02E-15	
115	50-00-0	Formaldehyde	8	1.67E-03	1	1	1.67E-03	3.14E-07	1.67E-03	1	1	1	20	8.34E-05	7.09E-05	
116	50-29-3	4,4-DDT	33	3.05E-05	40	11	6.93E-08	2.22E-07	2.91E-07	90	2000	100	20	8.08E-16	8.10E-16	
117	50-32-8	Benzo(a)pyrene	30	1.07E-04	40	11	2.42E-07	3.24E-08	2.74E-07	90	2000	100	20	7.62E-16	8.90E-16	
118	53-70-3	Dibenzo(a,h)anthracene	7	1.16E-05	40	11	2.62E-08	3.82E-10	2.65E-08	90	2000	100	20	7.37E-17	1.27E-18	
119	540-59-0	1,2-Dichloroethylene	19	3.39E-10	1	1	3.39E-10	2.12E-10	5.51E-10	1	1	1	20	2.75E-11	2.56E-11	
120	540-84-1	2,2,4-Trimethylpentane	28	0.00E+00	1	1	0.00E+00	0.00E+00	0.00E+00	1	1	1	20	0.00E+00	0.00E+00	
121	541-73-1	1,3-Dichlorobenzene	19	3.39E-10	1	1	3.39E-10	2.12E-10	5.51E-10	1	1	1	20	2.75E-11	2.56E-11	
122	56-23-5	Carbon tetrachloride	22	1.83E-20	1	1	1.83E-20	1.11E-19	1.29E-19	1	1	1	20	6.47E-21	2.13E-15	
123	563-80-4	3-Methyl-2-butanone	14	7.71E-05	1	1	7.71E-05	1.94E-06	7.90E-05	1	1	1	20	3.95E-06	3.80E-06	
124	56-49-5	3-Methylcholanthrene	28	0.00E+00	40	11	0.00E+00	0.00E+00	0.00E+00	90	2000	100	20	0.00E+00	0.00E+00	
125	56-55-3	Benzo(a)anthracene	33	4.58E-03	40	11	1.04E-05	3.32E-05	4.36E-05	90	2000	100	20	1.21E-13	1.22E-13	
126	57-14-7	1,1-Dimethylhydrazine	12	3.31E-03	1	1	3.31E-03	9.11E-06	3.32E-03	1	1	1	20	1.66E-04	1.63E-04	
127	58-89-9	gamma-BHC (Lindane)	32	1.81E-05	40	11	4.11E-08	6.18E-08	1.03E-07	90	2000	100	20	2.86E-16	2.93E-16	
128	58-90-2	2,3,4,6-Tetrachlorophenol	11	3.71E-03	1	1	3.71E-03	7.28E-06	3.72E-03	1	1	1	20	1.86E-04	1.83E-04	
129	591-78-6	2-Hexanone	14	7.71E-05	1	1	7.71E-05	1.94E-06	7.90E-05	1	1	1	20	3.95E-06	3.80E-06	
130	59-50-7	4-Chloro-3-methylphenol	32	4.97E-03	40	11	1.13E-05	1.40E-05	2.53E-05	90	2000	100	20	7.01E-14	8.54E-14	
131	59-89-2	N-Nitrosomorpholine	6	6.86E-03	1	1	6.86E-03	3.72E-08	6.86E-03	1	1	1	20	3.43E-04	3.39E-04	
132	602-87-9	5-Nitroacenaphthene	9	5.29E-03	40	11	1.20E-05	2.13E-08	1.41E-05	90	2000	100	20	3.93E-14	2.61E-04	
133	60-29-7	Ethyl ether	17	8.55E-08	1	1	8.55E-08	2.66E-08	1.12E-07	1	1	1	20	5.62E-09	5.24E-09	
134	603-34-9	Triphenylamine	32	4.22E-03	1	1	4.22E-03	5.05E-08	4.22E-03	1	1	1	20	2.11E-04	6.47E-14	

CALCULATION SHEET

BY: E. Bernot
DATE: 05/21/03

PROJECT: WTP
JOB NO.: 24590
CALC NO : 24590-WTP-M4C-FRP-00005
SHEET REV. A
SHEET NO.: 98

	A	B	C	D	E	F	G	H	I	J	K	L	M	N	O	P
1	Table B-11 HOP33 - Abated HLW Melter Offgas System															
2				HMP06	SBS	WESP	HOP07	HOP10	HOP11	HEME	HEPA 1	HEPA 2	VOC Ox	HOP33		
3	CAS #	COPC	Grouping	g/sec	DF	DF	g/sec	g/sec	g/sec	DF	DF	DF	DF	g/sec		
135	60-34-4	Methylhydrazine	10	1.11E-03	1	1	1.11E-03	2.74E-06	1.11E-03	1	1	1	20	5.54E-05	4.98E-05	
136	60-35-5	Acetamide	5	1.51E-03	1	1	1.51E-03	3.73E-09	1.51E-03	1	1	1	20	7.55E-05	7.45E-05	
137	60-57-1	Dieldrin	33	3.19E-05	40	11	7.24E-08	2.11E-07	2.84E-07	90	2000	100	20	7.88E-16	7.98E-16	
138	621-64-7	Di-n-Propylnitrosamine (N-Nitroso-di-n-propylamine)	10	5.03E-03	1	1	5.03E-03	1.24E-05	6.04E-03	1	1	1	20	2.52E-04	2.25E-04	
139	624-83-9	Methyl isocyanate	17	1.88E-08	1	1	1.88E-08	5.92E-09	2.47E-08	1	1	1	20	1.24E-09	1.15E-09	
140	627-13-4	Nitric acid, propyl ester	17	8.55E-08	1	1	8.55E-08	2.69E-08	1.12E-07	1	1	1	20	5.62E-09	5.24E-09	
141	62-75-9	N-Nitroso-N,N-dimethylamine (Dimethylnitrosamine)	9	9.87E-03	1	1	9.87E-03	3.97E-06	9.88E-03	1	1	1	20	4.94E-04	4.89E-04	
142	630-20-6	1,1,1,2-Tetrachloroethane	18	8.79E-09	1	1	8.79E-09	3.30E-09	1.21E-08	1	1	1	20	6.05E-10	5.83E-10	
143	64-17-5	Ethyl alcohol	10	1.11E-03	1	1	1.11E-03	2.74E-06	1.11E-03	1	1	1	20	5.54E-05	4.96E-05	
144	64-18-6	Formic acid	7	6.90E-03	1	1	6.90E-03	2.29E-07	6.90E-03	1	1	1	20	3.45E-04	2.03E-06	-3.43E-04
145	64-19-7	Acetic acid	6	6.86E-03	1	1	6.86E-03	3.72E-08	6.86E-03	1	1	1	20	3.43E-04	3.39E-04	
146	67-56-1	Methyl alcohol (Methanol)	10	1.11E-03	1	1	1.11E-03	2.74E-06	1.11E-03	1	1	1	20	5.54E-05	4.96E-05	
147	67-63-0	2-Propyl alcohol (Isopropanol; Propan-2-01)	11	7.96E-04	1	1	7.96E-04	1.70E-06	7.98E-04	1	1	1	20	3.99E-05	3.93E-05	
148	67-64-1	2-Propanone (Acetone)	13	1.78E-03	1	1	1.78E-03	1.86E-05	1.78E-03	1	1	1	20	8.91E-05	8.70E-05	
149	67-66-3	Chloroform	19	3.39E-10	1	1	3.39E-10	2.12E-10	5.51E-10	1	1	1	20	2.75E-11	2.58E-11	
150	67-72-1	Hexachloroethane	19	1.54E-09	1	1	1.54E-09	9.85E-10	2.50E-09	1	1	1	20	1.25E-10	1.16E-10	
151	684-16-2	Hexafluoroacetone	19	3.39E-10	1	1	3.39E-10	2.12E-10	5.51E-10	1	1	1	20	2.75E-11	2.58E-11	
152	71-23-8	n-Propyl alcohol	11	7.96E-04	1	1	7.96E-04	1.70E-06	7.98E-04	1	1	1	20	3.99E-05	3.93E-05	
153	71-36-3	n-Butyl alcohol	11	7.96E-04	1	1	7.96E-04	1.70E-06	7.98E-04	1	1	1	20	3.99E-05	3.93E-05	
154	71-43-2	Benzene	19	2.73E-11	1	1	2.73E-11	3.36E-11	6.09E-11	1	1	1	20	3.04E-12	2.82E-12	
155	71-55-6	Methyl chloroform (1,1,1-Trichloroethane)	21	4.81E-14	1	1	4.81E-14	1.89E-13	2.38E-13	1	1	1	20	1.19E-14	1.09E-14	
156	72-20-8	Endrin	32	3.31E-05	40	11	7.52E-08	9.31E-08	1.68E-07	90	2000	100	20	4.68E-16	5.69E-16	
157	72-43-5	Methoxychlor	7	2.30E-04	40	11	5.23E-07	7.65E-09	5.31E-07	90	2000	100	20	1.47E-15	2.54E-15	
158	72-54-8	4,4-DDD	32	3.31E-05	40	11	7.52E-08	9.31E-08	1.68E-07	90	2000	100	20	4.68E-16	5.69E-16	
159	72-55-9	4,4-DDE	34	1.63E-05	40	11	3.71E-08	4.80E-07	5.17E-07	90	2000	100	20	1.44E-15	1.43E-15	
160	74-83-9	Bromomethane (Methyl bromide)	19	3.39E-10	1	1	3.39E-10	2.12E-10	5.51E-10	1	1	1	20	2.75E-11	2.58E-11	
161	74-87-3	Chloromethane (Methyl chloride)	20	1.17E-12	1	1	1.17E-12	2.60E-12	3.77E-12	1	1	1	20	1.89E-13	1.75E-13	
162	74-97-5	Bromochloromethane	17	1.88E-08	1	1	1.88E-08	5.92E-09	2.47E-08	1	1	1	20	1.24E-09	1.15E-09	
163	74-99-7	Methylacetylene	20	5.34E-12	1	1	5.34E-12	1.18E-11	1.71E-11	1	1	1	20	8.57E-13	7.96E-13	
164	75-00-3	Chloroethane	20	1.17E-12	1	1	1.17E-12	2.60E-12	3.77E-12	1	1	1	20	1.89E-13	1.75E-13	
165	75-01-4	Vinyl chloride (1-Chloroethene)	22	8.32E-20	1	1	8.32E-20	5.05E-19	5.88E-19	1	1	1	20	2.94E-20	9.66E-15	
166	75-05-8	Acetonitrile	13	5.74E-04	1	1	5.74E-04	4.38E-06	5.78E-04	1	1	1	20	2.89E-05	2.83E-05	
167	75-07-0	Acetaldehyde	13	1.47E-03	1	1	1.47E-03	1.38E-05	1.48E-03	1	1	1	20	7.42E-05	7.25E-05	
168	75-09-2	Dichloromethane (Methylene chloride)	19	3.39E-10	1	1	3.39E-10	2.12E-10	5.51E-10	1	1	1	20	2.75E-11	2.58E-11	
169	75-12-7	Formamide	4	6.80E-03	1	1	6.80E-03	2.11E-09	6.80E-03	1	1	1	20	3.40E-04	3.36E-04	
170	75-15-0	Carbon disulfide	20	1.17E-12	1	1	1.17E-12	2.60E-12	3.77E-12	1	1	1	20	1.89E-13	1.75E-13	
171	75-21-8	Ethylene oxide (Oxirane)	15	1.74E-05	1	1	1.74E-05	8.20E-07	1.82E-05	1	1	1	20	9.10E-07	8.67E-07	
172	75-27-4	Bromodichloromethane	18	8.79E-09	1	1	8.79E-09	3.30E-09	1.21E-08	1	1	1	20	6.05E-10	5.83E-10	
173	75-34-3	1,1-Dichloroethane	19	3.39E-10	1	1	3.39E-10	2.12E-10	5.51E-10	1	1	1	20	2.75E-11	2.58E-11	
174	75-35-4	1,1-Dichloroethene (Vinylidene chloride)	22	1.83E-20	1	1	1.83E-20	1.11E-19	1.29E-19	1	1	1	20	6.47E-21	2.13E-15	
175	75-43-4	Dichlorofluoromethane	20	1.17E-12	1	1	1.17E-12	2.60E-12	3.77E-12	1	1	1	20	1.89E-13	1.75E-13	
176	75-45-6	Chlorodifluoromethane	22	1.83E-20	1	1	1.83E-20	1.11E-19	1.29E-19	1	1	1	20	6.47E-21	2.13E-15	
177	75-50-3	Trimethylamine	14	7.71E-05	1	1	7.71E-05	1.94E-06	7.90E-05	1	1	1	20	3.95E-06	3.80E-06	
178	75-52-5	Nitromethane	13	1.47E-03	1	1	1.47E-03	1.38E-05	1.48E-03	1	1	1	20	7.42E-05	7.25E-05	
179	75-55-8	2-Methylaziridine	11	3.62E-03	1	1	3.62E-03	7.71E-06	3.63E-03	1	1	1	20	1.81E-04	1.79E-04	
180	75-61-6	Difluorodibromomethane	22	1.83E-20	1	1	1.83E-20	1.11E-19	1.29E-19	1	1	1	20	6.47E-21	2.13E-15	
181	75-63-8	Trifluorobromomethane	25	0.00E+00	1	1	0.00E+00	0.00E+00	0.00E+00	1	1	1	20	0.00E+00	0.00E+00	
182	75-65-0	2-Methyl-2-propanol	11	7.96E-04	1	1	7.96E-04	1.70E-06	7.98E-04	1	1	1	20	3.99E-05	3.93E-05	
183	75-69-4	Trichlorofluoromethane	23	0.00E+00	1	1	0.00E+00	0.00E+00	0.00E+00	1	1	1	20	0.00E+00	0.00E+00	
184	75-71-8	Dichlorodifluoromethane	25	0.00E+00	1	1	0.00E+00	0.00E+00	0.00E+00	1	1	1	20	0.00E+00	0.00E+00	
185	75-99-0	2,2-Dichloropropionic acid	6	6.86E-03	1	1	6.86E-03	3.72E-08	6.86E-03	1	1	1	20	3.43E-04	3.39E-04	
186	76-03-9	Trichloroacetic acid	5	1.51E-03	1	1	1.51E-03	3.73E-09	1.51E-03	1	1	1	20	7.55E-05	7.45E-05	
187	76-11-9	1,1,1,2-Tetrachloro-2,2-difluoroethane	24	0.00E+00	1	1	0.00E+00	0.00E+00	0.00E+00	1	1	1	20	0.00E+00	0.00E+00	
188	76-12-0	1,1,2,2-Tetrachloro-1,2-difluoroethane	23	0.00E+00	1	1	0.00E+00	0.00E+00	0.00E+00	1	1	1	20	0.00E+00	0.00E+00	
189	76-13-1	1,2,2-Trichloro-1,1,2-trifluoroethane (Freon 113)	25	0.00E+00	1	1	0.00E+00	0.00E+00	0.00E+00	1	1	1	20	0.00E+00	0.00E+00	
190	76-14-2	1,2-Dichloro-1,1,2,2-tetrafluoroethane	28	0.00E+00	1	1	0.00E+00	0.00E+00	0.00E+00	1	1	1	20	0.00E+00	0.00E+00	
191	76-15-3	Chloropentafluoroethane	29	0.00E+00	1	1	0.00E+00	8.48E-29	8.48E-29	1	1	1	20	4.24E-30	4.24E-30	
192	76-44-8	Heptachlor	16	6.62E-07	1	1	6.62E-07	4.31E-08	7.05E-07	1	1	1	20	3.53E-08	3.34E-08	
193	78-83-1	2-Methylpropyl alcohol (Isobutyl alcohol)	11	3.62E-03	1	1	3.62E-03	7.71E-06	3.63E-03	1	1	1	20	1.81E-04	1.79E-04	
194	78-87-5	1,2-Dichloropropane	19	3.39E-10	1	1	3.39E-10	2.12E-10	5.51E-10	1	1	1	20	2.75E-11	2.58E-11	
195	78-92-2	1-Methylpropyl alcohol (2-Butanol)	11	7.96E-04	1	1	7.96E-04	1.70E-06	7.98E-04	1	1	1	20	3.99E-05	3.93E-05	
196	78-93-3	Methyl ethyl ketone (MEK, 2-Butanone)	13	3.23E-04	1	1	3.23E-04	3.04E-06	3.27E-04	1	1	1	20	1.63E-05	1.59E-05	
197	79-00-5	1,1,2-Trichloroethane	17	1.88E-08	1	1	1.88E-08	5.92E-09	2.47E-08	1	1	1	20	1.24E-09	1.15E-09	
198	79-01-6	Trichloroethylene	20	1.33E-12	1	1	1.33E-12	2.88E-12	4.21E-12	1	1	1	20	2.11E-13	1.96E-13	
199	79-09-4	Propionic acid	8	7.58E-03	1	1	7.58E-03	1.43E-06	7.58E-03	1	1	1	20	3.79E-04	3.22E-04	
200	79-10-7	2-Propenoic acid	8	7.58E-03	1	1	7.58E-03	1.43E-06	7.58E-03	1	1	1	20	3.79E-04	3.22E-04	
201	79-20-9	Methyl acetate	14	3.50E-04	1	1	3.50E-04	8.80E-06	3.58E-04	1	1	1	20	1.80E-05	1.73E-05	
202	79-34-5	1,1,2,2-Tetrachloroethane	16	2.99E-06	1	1	2.99E-06	2.28E-07	3.21E-06	1	1	1	20	1.61E-07	1.52E-07	
203	8001-35-2	Toxaphene	10	4.11E-05	40	11	9.33E-08	1.64E-07	2.57E-07	90	2000	100	20	7.14E-16	1.68E-06	
204	82-68-8	Pentachloronitrobenzene (PCBN or quintobenzene)	13	1.47E-03	1	1	1.47E-03	1.38E-05	1.48E-03	1	1	1	20	7.42E-05	7.25E-05	
205	83-32-9	Acenaphthene	15	7.90E-05	1	1	7.90E-05	3.73E-06	8.27E-05	1	1	1	20	4.14E-06	3.94E-06	
206	84-66-2	Diethyl phthalate	8	6.33E-03	1	1	6.33E-03	8.55E-07	6.33E-03	1	1	1	20	3.17E-04	3.13E-04	
207	84-74-2	Dibutyl phthalate	31	6.66E-03	40	11	1.51E-05	8.00E-06	2.31E-05	90	2000	100	20	6.43E-14	8.38E-14	
208	85-01-8	Phenanthrene	13	1.47E-03	1	1	1.47E-03	1.38E-05	1.48E-03	1	1	1	20	7.42E-05	7.25E-05	
209	85-68-7	Butylbenzyl phthalate	31	6.66E-03	40	11	1.51E-05	8.00E-06	2.31E-05	90	2000	100	20	6.43E-14	6.36E-14	
210	86-73-7	Fluorene	14	3.50E-04	40	11	7.96E-07	8.80E-06	9.60E-06	90	2000	100	20	2.87E-14	6.49E-13	6.23E-13
211	87-68-3	Hexachlorobutadiene	20	1.02E-12	1	1	1.02E-12	2.31E-12	3.33E-12	1	1	1	20	1.67E-13	1.64E-13	
212	87-86-5	Pentachlorophenol	6	6.86E-03	1	1	6.86E-03	3.72E-08	6.86E-03	1	1	1	20	3.43E-04	3.39E-04	
213	88-06-2	2,4,6-Trichlorophenol	10	5.03E-03	1	1	5.03E-03	1.24E-05	5.04E-03	1	1	1	20	2.52E-04	2.25E-04	
214	88-72-2	2-Nitrotoluene	12	7.28E-04	1	1	7.28E-04	2.00E-06	7.30E-04	1	1	1	20	3.65E-05	3.59E-05	
215	88-75-5	2-Nitrophenol	12	3.31E-03	1	1	3.31E-03	9.11E-06	3.32E-03	1	1	1	20	1.66E-04	1.63E-04	
216	88-85-7	2-sec-Butyl-4,6-dinitrophenol (Dinoseb)	8	9.89E-03	40	11	2.20E-05	2.94E-08	2.50E-05	90	2000	100	20	6.94E-14	3.23E-04	
217	88-89-1	Picric acid	2	8.46E-03	40	11	1.92E-05	1.14E-10	1.92E-05	90	2000	100	20	5.34E-14	3.36E-04	
218	91-20-3	Naphthalene	18	2.77E-07	1	1	2.77E-07	2.70E-08	3.04E-07	1	1	1	20	1.52E-08	1.44E-08	
219	91-22-5	Quinoline	9	5.29E-03	1	1	5.29E-03	2.13E-06	5.29E-03	1	1	1	20	2.65E-04	2.61E-04	
220	91-58-7	2-Chloronapthalene	16	1.36E-05	1	1	1.36E-05	1.03E-06	1.46E-05	1	1	1	20	7.31E-07	6.92E-07	
221	92-52-4	1,1'-Biphenyl	16	1.36E-05	1	1	1.36E-05	1.03E-06	1.46E-05	1	1	1	20	7.31E-07	6.92E-07	
222	92-93-3	4-Nitrobiphenyl	10	5.03E-03	40	11	1.14E-05	1.24E-05	2.39E-05	90	2000	100	20	6.83E-14	2.25E-04	
223	93-72-1	Silvex (2,4,5-TP)	6	6.86E-03	40	11	1.56E-05	1.70E-08	1.56E-05	90	2000	100	20	4.34E-14	1.27E-11	1.27E-11
224	93-76-5	2,4,5-T	5	6.86E-03	40	11	1.56E-05	1.70E-08	1.56E-05	90	2000	100	20	4.34E-14	1.27E-11	1.27E-11
225	94-75-7	2,4-D and esters (180C typed)	8	6.86E-03	1	1	6.86E-03	3.72E-08	6.86E-03	1	1	1	20	3.43E-04	1.27E-11	-3.43E-04
226	95-13-6	Indene	18	4.00E-08	1	1	4.00E-08	1.50E-08	5.50E-08	1	1	1	20	2.75E-09	2.66E-09	
227	95-47-6	o-Xylene	19	3.39E-10	1	1	3.39E-10	2.12E-10	5.51E-10	1	1	1	20	2.75E-11	2.58E-11	
228	95-48-7	o-Cresol (2-Methylphenol)	9	1.16E-03	1	1	1.16E-03	4.88E-07	1.16E-03	1	1	1	20	5.82E-05	5.75E-05	
229	95-49-8	2-Chlorotoluene	19	1.54E-09	1	1	1.54E-09	9.85E-10	2.50E-09	1	1	1	20	1.25E-10	1.16E-10	
230	95-50-1	o-Dichlorobenzene (1,2-Dichlorobenzene)	18	8.79E-09	1	1	8.79E-09	3.30E-09	1.21E-08	1	1	1	20	6.05E-10	5.63E-10	
231	95-57-8	2-Chlorophenol	11	3.62E-03	1	1	3.62E-03	7.71E-06	3.63E-03	1	1	1	20	1.81E-04	1.79E-04	
232	95-95-4	2,4,5-Trichlorophenol	9	5.29E-03	1	1	5.29E-03	2.13E-06	5.29E-03	1	1	1	20	2.65E-04	2.61E-04	
233	96-22-0	3-Pentanone	14	7.71E-05	1	1	7.71E-05	1.94E-06	7.90E-05	1	1	1	20	3.95E-06	3.80E-06	
234	96-69-5	Bis(3-tert-butyl-4-hydroxy-6-methyl-phenyl)sulfide	19	1.54E-09	40	11	3.50E-12	9.65E-10	9.66E-10	90	2000	100	20	2.69E-18	4.37E-18	1.68E-18
235	98-51-1	p-tert-Butyltoluene	21	2.19E-13	1	1	2.19E-13	8.81E-13	1.08E-12	1	1	1	20	5.40E-14	4.96E-14	
236	98-82-8	Cumene	20	5.34E-12	1	1	5.34E-12	1.18E-11	1.71E-11	1	1	1	20	8.57E-13	7.96E-13	
237	98-83-9	alpha-Methylstyrene	19	3.39E-10	1	1	3.39E-10	2.12E-10	5.51E-10	1	1	1	20	2.75E-11	2.58E-11	
238	98-86-2	Acetophenone	11	3.63E-03	1	1	3.63E-03	8.10E-06	3.54E-03	1	1	1	20	1.77E-04	1.74E-04	
239	98-95-3	Nitrobenzene	12	3.31E-03	1	1	3.31E-03	9.11E-06	3.32E-03	1	1	1	20	1.88E-04	1.63E-04	
240							2.23E-01									
241																
242	Coplanar PCBs			HOP07				HOP10	HOP11	HEME	HEPA 1	HEPA 2	VOC Ox	HOP33		
243				g/sec				g/sec	g/sec	DF	DF	DF	DF	g/sec		
244	31508-00-6	2,3',4,4',5-Pentachlorobiphenyl (PBC 118)		1.09E-10				1.39E-08	1.41E-08	90	2000	100	20	3.90E-17		
245	32598-13-3	3,3',4,4'-Tetrachlorobiphenyl (TCB)		1.09E-10			Correction for Coplanar I	1.39E-08	1.41E-08	90	2000	100	20	3.90E-17		
246	32598-14-4	2,3,3',4,4'-Pentachlorobiphenyl (PCB 105)		1.09E-10			0.99 as parent	1.39E-08	1.41E-08	90	2000	100	20	3.90E-17		
247	32774-16-6	3,3',4,4',5,5'-Hexachlorobiphenyl		1.09E-10			0.01 as coplanar	1.39E-08	1.41E-08	90	2000	100	20	3.90E-17		
248	35065-29-3	2,2',3,4,4',5,5'-Heptachlorobiphenyl		1.09E-10				1.39E-08	1.41E-08	90	2000	100	20	3.90E-17		
249	35065-30-6	2,2',3,3',4,4',5-Heptachlorobiphenyl		1.09E-10				1.39E-08	1.41E-08	90	2000	100	20	3.90E-17		
250	38380-08-4	2,3,3',4,4',5-Hexachlorobiphenyl (PCB 157)		1.09E-10				1.39E-08	1.41E-08	90	2000	100	20	3.90E-17		
251	39635-31-9	2,3,3',4,4',5,5'-Heptachlorobiphenyl		1.09E-10				1.39E-08	1.41E-08	90	2000	100	20	3.90E-17		
252	52663-72-6	2,3',4,4',5,5'-Hexachlorobiphenyl		1.09E-10				1.39E-08	1.41E-08	90	2000	100	20	3.90E-17		
253	57465-28-8	3,3',4,4',5-Pentachlorobiphenyl		1.09E-10				1.39E-08	1.41E-08	90	2000	100	20	3.90E-17		
254	65510-44-3	2',3,4,4',5-Pentachlorobiphenyl		1.09E-10				1.39E-08	1.41E-08	90	2000	100	20	3.90E-17		
255	69782-90-7	2,3,3',4,4',5'-Hexachlorobiphenyl		1.09E-10				1.39E-08	1.41E-08	90	2000	100	20	3.90E-17		
256	70362-50-4	3,4,4',5-Tetrachlorobiphenyl		1.09E-10				1.39E-08	1.41E-08	90	2000	100	20	3.90E-17		
257	74472-37-0	2,3,4,4',5-Pentachlorobiphenyl		1.09E-10				1.39E-08	1.41E-08	90	2000	100	20	3.90E-17		
258																
259	1336-36-3	Polychlorinated biphenyls (PCBs)		1.51E-07												
260	1336-36-3	UnCorrected (for coplanar PCBs)		1.52E-07												

	A	B	C	D	E	F	G	H	I	J	K
1	Table B-12 PJV32 - Unabated HLW PJV/RFD										Calc'd rate
2			Feed Rate					PJV32 rate	Performan	Adjusted	PJV32
3	CAS #	COPC	g/sec	In ACM	Group	Grouping	Phase	g/sec	Factor	PF	g/sec
4	100-00-5	p-Nitrochlorobenzene	3.49E-02	No		10	vapor			1.10E-10	3.82E-12
5	100-21-0	p-Phthalic acid	3.49E-02	Yes	1	1	vapor	7.49E-13	2.15E-11		7.49E-13
6	100-25-4	1,4-Dinitrobenzene	3.49E-02	No		6	particle			2.16E-11	7.54E-13
7	100-41-4	Ethyl benzene	7.67E-03	No		20	vapor			5.08E-20	3.90E-22
8	100-42-5	Styrene	7.67E-03	No		19	vapor			7.62E-18	5.85E-20
9	10061-01-5	cis-1,3-Dichloropropene	7.67E-03	Yes	19	19	vapor	1.66E-19	2.17E-17		1.66E-19
10	10061-02-6	trans-1,3-Dichloropropene	7.67E-03	No		17	vapor			3.47E-16	2.66E-18
11	101-55-3	4-Bromophenyl phenyl ether	3.49E-02	No		14	vapor			1.13E-12	3.94E-14
12	101-84-8	Diphenyl ether	7.67E-03	No		16	vapor			4.58E-14	3.51E-16
13	106-35-4	3-Heptanone	7.67E-03	No		14	vapor			1.13E-12	8.67E-15
14	106-42-3	p-Xylene (Dimethyl benzene)	7.67E-03	No		19	vapor			7.62E-18	5.85E-20
15	106-46-7	1,4-Dichlorobenzene	7.67E-03	No		18	vapor			1.69E-16	1.30E-18
16	106-88-7	1,2-Epoxybutane	7.67E-03	No		15	vapor			2.60E-13	1.99E-15
17	106-93-4	Ethylene dibromide (Dibromethane)	3.49E-02	Yes	16	16	vapor	2.33E-16	6.68E-15		2.33E-16
18	106-97-8	Butane	7.67E-03	Yes	26	26	vapor	0.00E+00	0.00E+00		0.00E+00
19	106-99-0	1,3-Butadiene	7.67E-03	Yes	23	23	vapor	2.11E-26	2.75E-24		2.11E-26
20	107-02-8	Acrolein	7.67E-03	No		14	vapor			1.13E-12	8.67E-15
21	107-05-1	3-Chloropropene (Allyl chloride)	7.67E-03	No		20	vapor			5.08E-20	3.90E-22
22	107-06-2	1,2-Dichloroethane (Ethylene chloride)	7.67E-03	No		17	vapor			3.47E-16	2.66E-18
23	107-12-0	Propionitrile	7.67E-03	No		13	vapor			4.68E-12	3.59E-14
24	107-13-1	Acrylonitrile	7.67E-03	No		14	vapor			1.13E-12	8.67E-15
25	107-18-6	2-Propene-1-ol	3.49E-02	No		10	vapor			1.10E-10	3.82E-12
26	107-31-3	Formic acid, methyl ester	3.49E-02	No		15	vapor			2.60E-13	9.06E-15
27	107-66-4	Dibutylphosphate	3.49E-02	No		5	particle			2.16E-11	7.55E-13
28	107-87-9	2-Pentanone	7.67E-03	No		14	vapor			1.13E-12	8.67E-15
29	108-03-2	1-Nitropropane	3.49E-02	No		14	vapor			1.13E-12	3.94E-14
30	108-05-4	Vinyl acetate	3.49E-02	No		16	vapor			4.58E-14	1.60E-15
31	108-10-1	Hexone (4-Methyl-2-pentanone or MIBK)	7.67E-03	No		14	vapor			1.13E-12	8.67E-15
32	108-20-3	Bis(isopropyl)ether	7.67E-03	No		18	vapor			1.69E-16	1.30E-18
33	108-38-3	m-Xylene (Dimethyl benzene)	7.67E-03	No		19	vapor			7.62E-18	5.85E-20
34	108-39-4	m-Cresol	7.67E-03	No		9	vapor			1.67E-11	1.28E-13
35	108-87-2	Methylcyclohexane	7.67E-03	Yes	25	25	vapor	0.00E+00	0.00E+00		0.00E+00
36	108-88-3	Toluene	7.67E-03	Yes	19	19	vapor	2.73E-21	3.56E-19		2.73E-21
37	108-90-7	Chlorobenzene	7.67E-03	No		19	vapor			7.62E-18	5.85E-20
38	108-93-0	Cyclohexanol	7.67E-03	No		10	vapor			1.10E-10	8.41E-13
39	108-94-1	Cyclohexanone	7.67E-03	No		11	vapor			1.14E-11	8.78E-14
40	108-95-2	Phenol	3.49E-02	Yes	8	8	vapor	7.39E-13	2.12E-11		7.39E-13
41	109-66-0	n-Pentane	7.67E-03	No		28	vapor			0.00E+00	0.00E+00
42	109-99-9	Tetrahydrofuran	1.63E-02	No		13	vapor			4.68E-12	7.61E-14
43	110-12-3	5-Methyl-2-hexanone	7.67E-03	No		15	vapor			2.60E-13	1.99E-15
44	110-43-0	2-Heptanone	7.67E-03	No		15	vapor			2.60E-13	1.99E-15
45	110-54-3	n-Hexane	7.67E-03	Yes	27	27	vapor	0.00E+00	0.00E+00		0.00E+00
46	110-62-3	n-Valeraldehyde	3.49E-02	No		15	vapor			2.60E-13	9.06E-15
47	110-82-7	Cyclohexane	7.67E-03	Yes	24	24	vapor	1.24E-34	1.62E-32		1.24E-34
48	110-83-8	Cyclohexene	7.67E-03	No		22	vapor			3.58E-22	2.75E-24
49	110-86-1	Pyridine	3.49E-02	No		11	vapor			1.14E-11	3.99E-13
50	111-65-9	n-Octane	7.67E-03	No		28	vapor			0.00E+00	0.00E+00
51	111-76-2	Ethylene glycol monobutyl ether	3.49E-02	No		9	vapor			1.67E-11	3.82E-13
52	111-84-2	n-Nonane	7.67E-03	Yes	28	28	vapor	0.00E+00	0.00E+00		0.00E+00
53	117-81-7	Bis(2-ethylhexyl)phthalate (DEHP)	3.49E-02	No		30	particle			3.23E-10	1.13E-11
54	117-84-0	n-Dioctyl phthalate	3.49E-02	No		32	particle			1.40E-10	4.89E-12
55	118-74-1	Hexachlorobenzene	7.21E-04	Yes	18	18	vapor	1.22E-19	1.69E-16		1.22E-19
56	120-12-7	Anthracene	3.49E-02	Yes	13	13	vapor	1.23E-13	3.54E-12		1.23E-13
57	120-82-1	1,2,4-Trichlorobenzene	7.67E-03	Yes	17	17	vapor	2.66E-18	3.47E-16		2.66E-18
58	120-83-2	2,4-Dichlorophenol	3.49E-02	No		10	vapor			1.10E-10	3.82E-12
59	121-44-8	Triethylamine	7.67E-03	No		15	vapor			2.60E-13	1.99E-15
60	121-69-7	Dimethylaniline	7.67E-03	No		13	vapor			4.68E-12	3.59E-14
61	122-39-4	N,N-Diphenylamine	7.67E-03	Yes	10	10	vapor	1.14E-13	1.48E-11		1.14E-13
62	123-19-3	4-Heptanone	7.67E-03	No		13	vapor			4.68E-12	3.59E-14
63	123-38-6	n-Propionaldehyde	7.67E-03	No		14	vapor			1.13E-12	8.67E-15
64	123-51-3	3-Methyl-1-butanol	7.67E-03	No		12	vapor			1.05E-11	8.02E-14
65	123-86-4	Acetic acid n-butyl ester	3.49E-02	No		16	vapor			4.58E-14	1.60E-15
66	123-91-1	1,4-Dioxane	2.09E-02	No		10	vapor			1.10E-10	2.29E-12
67	126-73-8	Tributyl phosphate	3.49E-02	Yes	7	7	vapor	7.59E-13	2.18E-11		7.59E-13
68	126-98-7	2-Methyl-2-propenenitrile (Methacrylonitrile)	7.67E-03	No		16	vapor			4.58E-14	3.51E-16
69	127-18-4	Perchloroethylene (tetrachloroethylene)	7.67E-03	Yes	21	21	vapor	2.48E-23	3.23E-21		2.48E-23
70	127-19-5	N,N-Dimethylacetamide	7.67E-03	No		5	vapor			2.16E-11	1.66E-13
71	128-37-0	2,6-Bis(tert-butyl)-4-methylphenol	3.49E-02	No		32	vapor			1.40E-10	4.89E-12
72	129-00-0	Pyrene	3.49E-02	Yes	33	33	particle	5.85E-12	1.68E-10		5.85E-12
73	1321-64-8	Pentachloronaphthalene	3.49E-02	No		14	particle			1.13E-12	3.94E-14
74	1321-65-9	Trichloronaphthalene	3.49E-02	No		15	vapor			2.60E-13	9.06E-15
75	132-64-9	Dibenzofuran	3.49E-02	Yes	15	15	vapor	9.06E-15	2.60E-13		9.06E-15
76	1335-87-1	Hexachloronaphthalene	3.49E-02	No		14	particle			1.13E-12	3.94E-14
77	1335-88-2	Tetrachloronaphthalene	3.49E-02	No		15	particle			2.60E-13	9.06E-15
78	1336-36-3	Polychlorinated biphenyls (PCBs)	1.21E-02	Yes	35	35	particle	1.15E-13	9.48E-12		1.14E-13
79	141-78-6	Acetic acid ethyl ester (Ethyl acetate)	3.49E-02	No		14	vapor			1.13E-12	3.94E-14
80	141-79-7	4-Methyl-3-penten-2-one	3.49E-02	No		13	vapor			4.68E-12	1.63E-13
81	142-82-5	n-Heptane	7.67E-03	No		27	vapor			0.00E+00	0.00E+00
82	144-62-7	Oxalic acid	3.49E-03	Yes	3	3	vapor	7.51E-14	2.15E-11		7.51E-14
83	156-60-5	trans-1,2-Dichloroethylene	7.67E-03	No		20	vapor			5.08E-20	3.90E-22
84	1582-09-8	Trifluralin	3.49E-02	No		14	particle			1.13E-12	3.94E-14
85	1634-04-4	Methyl tert-butyl ether	7.67E-03	No		16	vapor			4.58E-14	3.51E-16
86	1836-75-5	Nitrofen	3.49E-02	No		30	particle			3.23E-10	1.13E-11
87	189-55-9	Dibenzo(a,i)pyrene	3.49E-02	No		5	particle			2.16E-11	7.55E-13
88	189-64-0	Dibenzo(a,h)pyrene	3.49E-02	No		5	particle			2.16E-11	7.55E-13
89	191-24-2	Benzo(g,h,i)perylene	3.49E-02	No		30	particle			3.23E-10	1.13E-11
90	191-30-0	Benzo(a,l)pyrene	3.49E-02	No		5	particle			2.16E-11	7.55E-13
91	192-65-4	Dibenzo(a,e)pyrene	3.49E-02	No		5	particle			2.16E-11	7.55E-13
92	193-39-5	Indeno(1,2,3-cd)pyrene	3.49E-02	No		30	particle			3.23E-10	1.13E-11
93	205-82-3	Benzo(j)fluoranthene	3.49E-02	No		7	particle			2.18E-11	7.59E-13
94	205-99-2	Benzo(b)fluoranthene	3.49E-02	No		30	particle			3.23E-10	1.13E-11
95	206-44-0	Fluoranthene	3.49E-02	No		33	particle			1.75E-10	6.11E-12
96	207-08-9	Benzo(k)fluoranthene	3.49E-02	No		30	particle			3.23E-10	1.13E-11
97	208-96-8	Acenaphthylene	3.49E-02	Yes	14	14	vapor	3.94E-14	1.13E-12		3.94E-14
98	218-01-9	Chrysene	3.49E-02	Yes	32	32	particle	7.00E-12	2.01E-10		7.00E-12
99	2234-13-1	Octachloronaphthalene	3.49E-02	No		14	particle			1.13E-12	3.94E-14
100	224-42-0	Dibenz(a,j)acridine	3.49E-02	No		4	particle			2.15E-11	7.48E-13
101	226-36-8	Dibenz(a,h)acridine	3.49E-02	No		4	particle			2.15E-11	7.48E-13
102	2385-85-5	Mirex	3.49E-02	No		17	vapor			3.47E-16	1.21E-17
103	25551-13-7	Trimethyl benzene	7.67E-03	No		19	vapor			7.62E-18	5.85E-20
104	26140-60-3	Terphenyls	3.49E-02	No		34	particle			9.58E-11	3.34E-12
105	27154-33-2	Trichlorofluoroethane	7.67E-03	No		23	vapor			2.75E-24	2.11E-26
106	287-92-3	Cyclopentane	7.67E-03	No		24	vapor			1.62E-32	1.24E-34
107	309-00-2	Aldrin	4.30E-04	Yes	34	34	particle	4.12E-14	9.58E-11		4.12E-14
108	319-84-6	Hexachlorocyclohexane (Lindane) Alpha BHC	1.16E-04	No		33	vapor			1.75E-10	2.04E-14
109	319-85-7	Hexachlorocyclohexane (Lindane) Beta BHC	1.16E-04	Yes	30	30	particle	3.80E-14	3.27E-10		3.80E-14
110	319-86-8	Delta-BHC	1.16E-04	No		30	particle			3.23E-10	3.76E-14
111	3697-24-3	5-Methylchrysene	3.49E-02	No		32	particle			1.40E-10	4.89E-12
112	3825-26-1	Ammonium perfluorooctanoate	3.49E-02	No		14	particle			1.13E-12	3.94E-14
113	4170-30-3	2-Butenaldehyde (2-Butenal or Crotonaldehyde)	7.67E-03	Yes	11	11	vapor	8.77E-14	1.14E-11		8.77E-14
114	465-73-6	Isodrin	2.32E-04	No		35	vapor			9.48E-12	2.20E-15
115	50-00-0	Formaldehyde	7.67E-03	No		8	vapor			1.37E-10	1.05E-12
116	50-29-3	4,4-DDT	2.32E-04	No		33	particle			1.75E-10	4.06E-14
117	50-32-8	Benzo(a)pyrene	4.42E-04	Yes	30	30	particle	1.41E-13	3.20E-10		1.41E-13
118	53-70-3	Dibenzo(a,h)anthracene	5.81E-05	No		7	particle			2.18E-11	1.27E-15
119	540-59-0	1,2-Dichloroethylene	7.67E-03	No		19	vapor			7.62E-18	5.85E-20
120	540-84-1	2,2,4-Trimethylpentane	7.67E-03	No		28	vapor			0.00E+00	0.00E+00
121	541-73-1	1,3-Dichlorobenzene	7.67E-03	No		19	vapor			7.62E-18	5.85E-20
122	56-23-5	Carbon tetrachloride	7.67E-03	Yes	22	22	vapor	2.75E-24	3.58E-22		2.75E-24
123	563-80-4	3-Methyl-2-butanone	7.67E-03	No		14	vapor			1.13E-12	8.67E-15
124	56-49-5	3-Methylcholanthrene	3.49E-02	No		28	particle			0.00E+00	0.00E+00
125	56-55-3	Benzo(a)anthracene	3.49E-02	No		33	particle			1.75E-10	6.11E-12
126	57-14-7	1,1-Dimethylhydrazine	3.49E-02	Yes	12	12	vapor	3.65E-13	1.05E-11		3.65E-13
127	58-89-9	gamma-BHC (Lindane)	1.16E-04	Yes	32	32	particle	2.41E-14	2.07E-10		2.41E-14
128	58-90-2	2,3,4,6-Tetrachlorophenol	3.49E-02	Yes	11	11	vapor	4.09E-13	1.17E-11		4.09E-13
129	591-78-6	2-Hexanone	7.67E-03	No		14	vapor			1.13E-12	8.67E-15
130	59-50-7	4-Chloro-3-methylphenol	3.49E-02	No		32	particle			1.40E-10	4.89E-12
131	59-89-2	N-Nitrosomorpholine	3.49E-02	No		6	vapor			2.16E-11	7.54E-13
132	602-87-9	5-Nitroacenaphthene	3.49E-02	No		9	particle			1.67E-11	5.82E-13
133	60-29-7	Ethyl ether	3.49E-02	No		17	vapor			3.47E-16	1.21E-17
134	603-34-9	Triphenylamine	3.49E-02	Yes	32	32	vapor	4.65E-13	1.33E-11		4.65E-13
135	60-34-4	Methylhydrazine	7.67E-03	No		10	vapor			1.10E-10	8.41E-13
136	60-35-5	Acetamide	7.67E-03	Yes	5	5	vapor	1.66E-13	2.16E-11		1.66E-13
137	60-57-1	Dieldrin	2.32E-04	Yes	33	33	particle	4.26E-14	1.83E-10		4.26E-14
138	621-64-7	Di-n-Propylnitrosamine (N-Nitroso-di-n-propylamine)	3.49E-02	No		10	vapor			1.10E-10	3.82E-12
139	624-83-9	Methyl isocyanate	7.67E-03	No		17	vapor			3.47E-16	2.66E-18
140	627-13-4	Nitric acid, propyl ester	3.49E-02	No		17	vapor			3.47E-16	1.21E-17
141	62-75-9	N-Nitroso-N,N-dimethylamine (Dimethylnitrosamine)	6.51E-02	Yes	9	9	vapor	1.09E-12	1.67E-11		1.09E-12
142	630-20-6	1,1,1,2-Tetrachloroethane	7.67E-03	No		18	vapor			1.69E-16	1.30E-18
143	64-17-5	Ethyl alcohol	7.67E-03	No		10	vapor			1.10E-10	8.41E-13
144	64-18-6	Formic acid	3.49E-02	No		7	vapor			2.18E-11	7.59E-13
145	64-19-7	Acetic acid	3.49E-02	No		6	vapor			2.16E-11	7.54E-13
146	67-56-1	Methyl alcohol (Methanol)	7.67E-03	No		10	vapor			1.10E-10	8.41E-13
147	67-63-0	2-Propyl alcohol (Isopropanol, Propan-2-01)	7.67E-03	No		11	vapor			1.14E-11	8.78E-14
148	67-64-1	2-Propanone (Acetone)	4.18E-02	No		13	vapor			4.68E-12	1.96E-13
149	67-66-3	Chloroform	7.67E-03	No		19	vapor			7.62E-18	5.85E-20
150	67-72-1	Hexachloroethane	3.49E-02	No		19	vapor			7.62E-18	2.66E-19
151	684-16-2	Hexafluoroacetone	7.67E-03	No		19	vapor			7.62E-18	5.85E-20
152	71-23-8	n-Propyl alcohol	7.67E-03	No		11	vapor			1.14E-11	8.78E-14
153	71-36-3	n-Butyl alcohol	7.67E-03	No		11	vapor			1.14E-11	8.78E-14
154	71-43-2	Benzene	7.67E-03	Yes	19	19	vapor	6.36E-21	8.29E-19		6.36E-21
155	71-55-6	Methyl chloroform (1,1,1-Trichloroethane)	7.67E-03	No		21	vapor			3.23E-21	2.48E-23
156	72-20-8	Endrin	2.32E-04	No		32	particle			1.40E-10	3.26E-14
157	72-43-5	Methoxychlor	1.16E-03	No		7	particle			2.18E-11	2.53E-14
158	72-54-8	4,4-DDD	2.32E-04	No		32	particle			1.40E-10	3.26E-14
159	72-55-9	4,4-DDE	2.32E-04	No		34	particle			9.58E-11	2.23E-14
160	74-83-9	Bromomethane (Methyl bromide)	7.67E-03	No		19	vapor			7.62E-18	5.85E-20
161	74-87-3	Chloromethane (Methyl chloride)	7.67E-03	No		20	vapor			5.08E-20	3.90E-22
162	74-97-5	Bromochloromethane	7.67E-03	No		17	vapor			3.47E-16	2.66E-18
163	74-99-7	Methylacetylene	3.49E-02	No		20	vapor			5.08E-20	1.77E-21
164	75-00-3	Chloroethane	7.67E-03	No		20	vapor			5.08E-20	3.90E-22
165	75-01-4	Vinyl chloride (1-Chloroethene)	3.49E-02	No		22	vapor			3.58E-22	1.25E-23
166	75-05-8	Acetonitrile	1.09E-02	Yes	13	13	vapor	6.35E-14	5.81E-12		6.35E-14
167	75-07-0	Acetaldehyde	3.49E-02	No		13	vapor			4.68E-12	1.63E-13
168	75-09-2	Dichloromethane (Methylene chloride)	7.67E-03	No		19	vapor			7.62E-18	5.85E-20
169	75-12-7	Formamide	3.49E-02	Yes	4	4	vapor	7.48E-13	2.15E-11		7.48E-13
170	75-15-0	Carbon disulfide	7.67E-03	No		20	vapor			5.08E-20	3.90E-22
171	75-21-8	Ethylene oxide (Oxirane)	7.67E-03	No		15	vapor			2.60E-13	1.99E-15
172	75-27-4	Bromodichloromethane	7.67E-03	No		18	vapor			1.69E-16	1.30E-18
173	75-34-3	1,1-Dichloroethane	7.67E-03	No		19	vapor			7.62E-18	5.85E-20
174	75-35-4	1,1-Dichloroethene (Vinylidene chloride)	7.67E-03	No		22	vapor			3.58E-22	2.75E-24
175	75-43-4	Dichlorofluoromethane	7.67E-03	No		20	vapor			5.08E-20	3.90E-22
176	75-45-6	Chlorodifluoromethane	7.67E-03	No		22	vapor			3.58E-22	2.75E-24
177	75-50-3	Trimethylamine	7.67E-03	No		14	vapor			1.13E-12	8.67E-15
178	75-52-5	Nitromethane	3.49E-02	No		13	vapor			4.68E-12	1.63E-13
179	75-55-8	2-Methylaziridine	3.49E-02	No		11	vapor			1.14E-11	3.99E-13
180	75-61-6	Difluorodibromomethane	7.67E-03	No		22	vapor			3.58E-22	2.75E-24
181	75-63-8	Trifluorobromomethane	7.67E-03	No		25	vapor			0.00E+00	0.00E+00
182	75-65-0	2-Methyl-2-propanol	7.67E-03	No		11	vapor			1.14E-11	8.78E-14
183	75-69-4	Trichlorofluoromethane	7.67E-03	No		23	vapor			2.75E-24	2.11E-26
184	75-71-8	Dichlorodifluoromethane	7.67E-03	No		25	vapor			0.00E+00	0.00E+00
185	75-99-0	2,2-Dichloropropionic acid	3.49E-02	No		6	vapor			2.16E-11	7.54E-13
186	76-03-9	Trichloroacetic acid	7.67E-03	No		5	vapor			2.16E-11	1.66E-13
187	76-11-9	1,1,1,2-Tetrachloro-2,2-difluoroethane	3.49E-02	No		24	vapor			1.62E-32	5.66E-34
188	76-12-0	1,1,2,2-Tetrachloro-1,2-difluoroethane	3.49E-02	No		23	vapor			2.75E-24	9.60E-26
189	76-13-1	1,2,2-Trichloro-1,1,2-trifluoroethane (Freon 113)	7.67E-03	No		25	vapor			0.00E+00	0.00E+00
190	76-14-2	1,2-Dichloro-1,1,2,2-tetrafluoroethane	7.67E-03	No		26	vapor			0.00E+00	0.00E+00
191	76-15-3	Chloropentafluoroethane	7.67E-03	Yes	29	29	vapor	0.00E+00	0.00E+00		0.00E+00
192	76-44-8	Heptachlor	7.56E-04	Yes	16	16	vapor	7.72E-17	1.02E-13		7.72E-17
193	78-83-1	2-Methylpropyl alcohol (Isobutyl alcohol)	3.49E-02	No		11	vapor			1.14E-11	3.99E-13
194	78-87-5	1,2-Dichloropropane	7.67E-03	No		19	vapor			7.62E-18	5.85E-20
195	78-92-2	1-Methylpropyl alcohol (2-Butanol)	7.67E-03	No		11	vapor			1.14E-11	8.78E-14
196	78-93-3	Methyl ethyl ketone (MEK, 2-Butanone)	7.67E-03	No		13	vapor			4.68E-12	3.59E-14
197	79-00-5	1,1,2-Trichloroethane	7.67E-03	No		17	vapor			3.47E-16	2.66E-18
198	79-01-6	Trichloroethylene	7.67E-03	Yes	20	20	vapor	4.37E-22	5.69E-20		4.37E-22
199	79-09-4	Propionic acid	3.49E-02	No		8	vapor			1.37E-10	4.77E-12
200	79-10-7	2-Propenoic acid	3.49E-02	No		8	vapor			1.37E-10	4.77E-12
201	79-20-9	Methyl acetate	3.49E-02	No		14	vapor			1.13E-12	3.94E-14

	M	N
3	Adjusted Performance Factors	
4	Group	PF
5	1	2.15E-11
6	2	3.22E-10
7	3	2.15E-11
8	4	2.15E-11
9	5	2.16E-11
10	6	2.16E-11
11	7	2.18E-11
12	8	1.37E-10
13	9	1.67E-11
14	10	1.10E-10
15	11	1.14E-11
16	12	1.05E-11
17	13	4.68E-12
18	14	1.13E-12
19	15	2.60E-13
20	16	4.58E-14
21	17	3.47E-16
22	18	1.69E-16
23	19	7.62E-18
24	20	5.08E-20
25	21	3.23E-21
26	22	3.58E-22
27	23	2.75E-24
28	24	1.62E-32
29	25	0.00E+00
30	26	0.00E+00
31	27	0.00E+00
32	28	0.00E+00
33	29	0.00E+00
34	30	3.23E-10
35	31	2.54E-10
36	32	1.40E-10
37	33	1.75E-10
38	34	9.58E-11
39	35	9.48E-12

	Q	R	S
5	Coplanar PCBs		PJV32
6			g/sec
7	31508-00-6	2,3',4,4',5-Pentachlorobiphenyl (PBC 118)	8.20E-17
8	32598-13-3	3,3',4,4'-Tetrachlorobiphenyl (TCB)	8.20E-17
9	32598-14-4	2,3,3',4,4'-Pentachlorobiphenyl (PCB 105)	8.20E-17
10	32774-16-6	3,3',4,4',5,5'-Hexachlorobiphenyl	8.20E-17
11	35065-29-3	2,2',3,4,4',5,5'-Heptachlorobiphenyl	8.20E-17
12	35065-30-6	2,2',3,3',4,4',5-Heptachlorobiphenyl	8.20E-17
13	38380-08-4	2,3,3',4,4',5-Hexachlorobiphenyl (PCB 157)	8.20E-17
14	39635-31-9	2,3,3',4,4',5,5'-Heptachlorobiphenyl	8.20E-17
15	52663-72-6	2,3',4,4',5,5'-Hexachlorobiphenyl	8.20E-17
16	57465-28-8	3,3',4,4',5-Pentachlorobiphenyl	8.20E-17
17	65510-44-3	2',3,4,4',5-Pentachlorobiphenyl	8.20E-17
18	69782-90-7	2,3,3',4,4',5'-Hexachlorobiphenyl	8.20E-17
19	70362-50-4	3,4,4',5-Tetrachlorobiphenyl	8.20E-17
20	74472-37-0	2,3,4,4',5-Pentachlorobiphenyl	8.20E-17
22	1336-36-3	Polychlorinated biphenyls (PCBs)	1.14E-13
23	1336-36-3	UnCorrected (for coplanar PCBs)	1.15E-13

	U	V
8	Correction for coplanar PCBs	
9	0.99	as parent
10	0.01	as coplanar sum

CALCULATION SHEET

BY: E. Remor
DATE: 05-21-03

PROJECT: WTP
JOB NO.: 24590
CALC NO.: 24590-WTP-M4C-TM0-00003
SHEET REV.: A
SHEET NO.: 100

	A	B	C	D	E	F	G	H	I	J	K	L	M	N	O	P	Q	R	S	T	U	V	W
1	Table 9-11	PJV32 - Unbased HLW PJM/RFD									Calc'd rate												
2			Feed Rate					PJV32 rate	Preliminary Adjusted		PJV32												
3	CAS #	COPC	g/sec	In ACM	Group	Grouping	Phase	g/sec	Factor	PF	g/sec		Adjusted Performance Factors										
200	79-34-5	1,1,2,2-Tetrachloroethane	7.67E-03	No		16	vapor			4.58E-14	3.51E-16												
201	8001-35-2	Toxaphene	2.67E-04	Yes	10	10	particle	5.47E-14	2.05E-10		5.47E-14												
202	82-68-8	Pentachloronitrobenzene (PCNB or quintobenzene)	3.49E-02	No		13	vapor			4.68E-12	1.63E-13												
203	83-32-9	Acenaphthene	3.49E-02	No		15	vapor			2.83E-13	9.88E-15												
204	84-66-2	Diethyl phthalate	3.49E-02	Yes	8	8	vapor	6.87E-13	2.00E-1		6.87E-13												
207	84-74-2	Dibutyl phthalate	3.49E-02	Yes	31	31	particle	6.85E-13	2.50E-10		6.85E-13												
208	85-01-8	Phenanthrene	3.49E-02	No		13	vapor			4.68E-12	1.63E-13												
209	85-68-7	Butylbenzyl phthalate	3.49E-02	No		31	particle			2.54E-10	8.85E-13												
210	86-73-7	Fluorene	3.49E-02	No		14	particle			1.13E-12	3.94E-14												
211	87-68-3	Hexachlorobutadiene	7.67E-03	Yes	20	20	vapor	3.44E-22	4.44E-20		3.44E-22												
212	87-86-5	Pentachlorophenol	3.49E-02	Yes	6	6	vapor	7.54E-13	1.16E-11		7.54E-13												
213	88-06-2	2,4,6-Trichlorophenol	3.49E-02	No		10	vapor			1.10E-10	3.82E-12												
214	88-72-2	2-Nitrotoluene	7.67E-03	No		12	vapor			1.02E-11	8.02E-14												
215	88-75-5	2-Nitrophenol	3.49E-02	No		12	vapor			1.02E-11	3.55E-13												
216	88-85-7	2-sec-Butyl-4,6-dinitrophenol (Dinoseb)	3.49E-02	Yes	8	8	particle	1.39E-11	3.83E-10		1.39E-11												
217	88-89-1	Picric acid	3.49E-02	Yes	2	2	particle	1.12E-11	3.83E-10		1.12E-11												
218	91-20-3	Naphthalene	1.16E-03	Yes	16	16	vapor	3.32E-17	7.86E-14		3.32E-17												
219	91-22-5	Quinoline	3.49E-02	No		9	vapor			1.87E-11	6.52E-13												
220	91-58-7	2-Chloronaphthalene	3.49E-02	No		16	vapor			4.58E-14	1.60E-15												
221	92-52-4	1,1'-Biphenyl	3.49E-02	No		10	vapor			4.58E-14	1.60E-15												
222	92-93-3	4-Nitrobiphenyl	3.49E-02	No		10	particle			1.10E-10	3.82E-12												
223	93-72-1	Silvex (2,4,5-TP)	3.49E-02	No		3	particle			2.19E-11	7.55E-13												
224	93-76-5	2,4,5-T	3.49E-02	No		3	particle			2.19E-11	7.55E-13												
225	94-75-7	2,4-D and esters (HSC listed)	3.49E-02	No		8	vapor			2.18E-11	7.54E-13												
226	95-13-6	Indene	3.49E-02	No		18	vapor			1.68E-16	5.80E-18												
227	95-47-6	o-Xylene	7.67E-03	No		19	vapor			7.62E-18	2.62E-20												
228	95-48-7	o-Cresol (2-Methylphenol)	7.67E-03	No		9	vapor			1.87E-11	1.28E-13												
229	95-49-8	2-Chlorotoluene	3.49E-02	No		19	vapor			7.62E-18	2.64E-19												
230	95-50-1	o-Dichlorobenzene (1,2-Dichlorobenzene)	7.67E-03	No		16	vapor			1.68E-16	1.30E-18												
231	95-57-8	2-Chlorophenol	3.49E-02	No		11	vapor			1.14E-11	3.98E-13												
232	95-95-4	2,4,5-Trichlorophenol	3.49E-02	No		9	vapor			1.87E-11	6.52E-13												
233	96-12-8	3-Pentanone	7.67E-03	No		15	vapor			1.13E-12	8.67E-15												
234	96-69-5	Bis(3-tert-butyl-4-hydroxy-6-methylphenyl)sulfide	3.49E-02	No		19	particle			7.62E-18	2.66E-19												
235	98-51-1	p-tert-Butyltoluene	3.49E-02	No		21	vapor			3.23E-21	1.13E-22												
236	98-82-8	Cumene	3.49E-02	No		20	vapor			5.68E-20	1.77E-21												
237	98-83-9	alpha-Methylstyrene	7.67E-03	No		19	vapor			7.62E-18	5.85E-20												
238	98-86-2	Acetophenone	3.49E-02	Yes	11	11	vapor	3.84E-13	1.12E-11		3.84E-13												
239	98-95-3	Nitrobenzene	3.49E-02	No		12	vapor			1.05E-11	3.65E-13												
240											2.25E-10												

BY: E. Benlos
DATE: 05/21/03

PROJECT: WTP
JOB NO.: 24590
CALC NO.: 24590-WTP-M4C-FRP-00005
SHEET REV: A
SHEET NO.: 101

	A	B	C	D	E	F	G	H	I	J	K	L	M	N
1	Table B-13 PJV34 - Abated HLW PJM/RFD													
2			PJV32	HEPA 1	HEPA 2	PJV34								
3	CAS #	COPC	g/sec	DF	DF	g/sec								
4	100-00-5	p-Nitrochlorobenzene	3.82E-12	1	1	3.82E-12		Coplanar PCBs		PJV34				
5	100-21-0	p-Phthalic acid	7.49E-13	1	1	7.49E-13				g/sec				
6	100-25-4	1,4-Dinitrobenzene	7.54E-13	2000	100	3.77E-18		31508-00-6	2,3',4,4',5-Pentachlorobiphenyl (PBC 118)	4.10E-22				
7	100-41-4	Ethyl benzene	3.90E-22	1	1	3.90E-22		32598-13-3	3,3',4,4'-Tetrachlorobiphenyl (TCB)	4.10E-22		Correction for Coplanar PCBs		
8	100-42-5	Styrene	5.85E-20	1	1	5.85E-20		32598-14-4	2,3,3',4,4'-Pentachlorobiphenyl (PCB 105)	4.10E-22		0.99 as parent		
9	10061-01-5	cis-1,3-Dichloropropene	1.66E-19	1	1	1.66E-19		32774-16-6	3,3',4,4',5,5'-Hexachlorobiphenyl	4.10E-22		0.01 as coplanar sum		
10	10061-02-6	trans-1,3-Dichloropropene	2.66E-18	1	1	2.66E-18		35065-29-3	2,2',3,4,4',5,5'-Heptachlorobiphenyl	4.10E-22				
11	101-55-3	4-Bromophenylphenyl ether	3.94E-14	1	1	3.94E-14		35065-30-6	2,2',3,3',4,4',5-Heptachlorobiphenyl	4.10E-22				
12	101-84-8	Diphenyl ether	3.51E-16	1	1	3.51E-16		38380-08-4	2,3,3',4,4',5-Hexachlorobiphenyl (PCB 157)	4.10E-22				
13	106-35-4	3-Heptanone	8.67E-15	1	1	8.67E-15		39635-31-9	2,3,3',4,4',5,5'-Heptachlorobiphenyl	4.10E-22				
14	106-42-3	p-Xylene (Dimethyl benzene)	5.85E-20	1	1	5.85E-20		52663-72-6	2,3',4,4',5,5'-Hexachlorobiphenyl	4.10E-22				
15	106-46-7	1,4-Dichlorobenzene	1.30E-18	1	1	1.30E-18		57465-28-8	3,3',4,4',5-Pentachlorobiphenyl	4.10E-22				
16	106-88-7	1,2-Epoxybutane	1.99E-15	1	1	1.99E-15		65510-44-3	2',3,4,4',5-Pentachlorobiphenyl	4.10E-22				
17	106-93-4	Ethylene dibromide (Dibromethane)	2.33E-16	1	1	2.33E-16		69782-90-7	2,3,3',4,4',5'-Hexachlorobiphenyl	4.10E-22				
18	106-97-8	Butane	0.00E+00	1	1	0.00E+00		70362-50-4	3,4,4',5-Tetrachlorobiphenyl	4.10E-22				
19	106-99-0	1,3-Butadiene	2.11E-26	1	1	2.11E-26		74472-37-0	2,3,4,4',5-Pentachlorobiphenyl	4.10E-22				
20	107-02-8	Acrolein	8.67E-15	1	1	8.67E-15								
21	107-05-1	3-Chloropropene (Allyl chloride)	3.90E-22	1	1	3.90E-22		1336-36-3	Polychlorinated biphenyls (PCBs)	5.68E-19				
22	107-06-2	1,2-Dichloroethane (Ethylene chloride)	2.66E-18	1	1	2.66E-18		1336-36-3	UnCorrected (for coplanar PCBs)	5.74E-19				
23	107-12-0	Propionitrile	3.59E-14	1	1	3.59E-14								
24	107-13-1	Acrylonitrile	8.67E-15	1	1	8.67E-15								
25	107-18-6	2-Propene-1-ol	3.82E-12	1	1	3.82E-12								
26	107-31-3	Formic acid, methyl ester	9.06E-15	1	1	9.06E-15								
27	107-66-4	Dibutylphosphate	7.55E-13	2000	100	3.77E-18								
28	107-87-9	2-Pentanone	8.67E-15	1	1	8.67E-15								
29	108-03-2	1-Nitropropane	3.94E-14	1	1	3.94E-14								
30	108-05-4	Vinyl acetate	1.80E-15	1	1	1.80E-15								
31	108-10-1	Hexone (4-Methyl-2-pentanone or MIBK)	8.67E-15	1	1	8.67E-15								
32	108-20-3	Bis(isopropyl)ether	1.30E-18	1	1	1.30E-18								
33	108-38-3	m-Xylene (Dimethyl benzene)	5.85E-20	1	1	5.85E-20								
34	108-39-4	m-Cresol	1.28E-13	1	1	1.28E-13								
35	108-87-2	Methylcyclohexane	0.00E+00	1	1	0.00E+00								
36	108-88-3	Toluene	2.73E-21	1	1	2.73E-21								
37	108-90-7	Chlorobenzene	5.85E-20	1	1	5.85E-20								
38	108-93-0	Cyclohexanol	8.41E-13	1	1	8.41E-13								
39	108-94-1	Cyclohexanone	8.78E-14	1	1	8.78E-14								
40	108-95-2	Phenol	7.39E-13	1	1	7.39E-13								
41	109-66-0	n-Pentane	0.00E+00	1	1	0.00E+00								
42	109-99-9	Tetrahydrofuran	7.61E-14	1	1	7.61E-14								
43	110-12-3	5-Methyl-2-hexanone	1.99E-15	1	1	1.99E-15								
44	110-43-0	2-Heptanone	1.99E-15	1	1	1.99E-15								
45	110-54-3	n-Hexane	0.00E+00	1	1	0.00E+00								
46	110-62-3	n-Valeraldehyde	9.06E-15	1	1	9.06E-15								
47	110-82-7	Cyclohexane	1.24E-34	1	1	1.24E-34								
48	110-83-8	Cyclohexene	2.75E-24	1	1	2.75E-24								
49	110-86-1	Pyridine	3.99E-13	1	1	3.99E-13								
50	111-65-9	n-Octane	0.00E+00	1	1	0.00E+00								
51	111-76-2	Ethylene glycol monobutyl ether	5.82E-13	1	1	5.82E-13								
52	111-84-2	n-Nonane	0.00E+00	1	1	0.00E+00								
53	117-81-7	Bis(2-ethylhexyl)phthalate (DEHP)	1.13E-11	2000	100	5.64E-17								
54	117-84-0	n-Dioctyl phthalate	4.89E-12	2000	100	2.45E-17								
55	118-74-1	Hexachlorobenzene	1.22E-19	1	1	1.22E-19								
56	120-12-7	Anthracene	1.23E-13	1	1	1.23E-13								
57	120-82-1	1,2,4-Trichlorobenzene	2.66E-18	1	1	2.66E-18								
58	120-83-2	2,4-Dichlorophenol	3.82E-12	1	1	3.82E-12								
59	121-44-8	Triethylamine	1.99E-15	1	1	1.99E-15								
60	121-69-7	Dimethylaniline	3.59E-14	1	1	3.59E-14								
61	122-39-4	N,N-Diphenylamine	1.14E-13	1	1	1.14E-13								
62	123-19-3	4-Heptanone	3.59E-14	1	1	3.59E-14								
63	123-38-6	n-Propionaldehyde	8.67E-15	1	1	8.67E-15								
64	123-51-3	3-Methyl-1-butanol	8.02E-14	1	1	8.02E-14								
65	123-86-4	Acetic acid n-butyl ester	1.60E-15	1	1	1.60E-15								
66	123-91-1	1,4-Dioxane	2.29E-12	1	1	2.29E-12								
67	126-73-8	Tributyl phosphate	7.59E-13	1	1	7.59E-13								
68	126-98-7	2-Methyl-2-propenenitrile (Methacrylonitrile)	3.51E-16	1	1	3.51E-16								
69	127-18-4	Perchloroethylene (tetrachloroethylene)	2.48E-23	1	1	2.48E-23								
70	127-19-5	N,N-Dimethylacetamide	1.66E-13	1	1	1.66E-13								
71	128-37-0	2,6-Bis(tert-butyl)-4-methylphenol	4.89E-12	1	1	4.89E-12								
72	129-00-0	Pyrene	5.85E-12	2000	100	2.92E-17								
73	1321-64-8	Pentachloronaphthalene	3.94E-14	2000	100	1.97E-19								
74	1321-65-9	Trichloronaphthalene	9.06E-15	1	1	9.06E-15								
75	132-64-9	Dibenzofuran	9.06E-15	1	1	9.06E-15								
76	1335-87-1	Hexachloronaphthalene	3.94E-14	2000	100	1.97E-19								
77	1335-88-2	Tetrachloronaphthalene	9.06E-15	2000	100	4.53E-20								
78	1336-36-3	Polychlorinated biphenyls (PCBs)	1.14E-13	2000	100	5.68E-19								
79	141-78-6	Acetic acid ethyl ester (Ethyl acetate)	3.94E-14	1	1	3.94E-14								
80	141-79-7	4-Methyl-3-penten-2-one	1.63E-13	1	1	1.63E-13								
81	142-82-5	n-Heptane	0.00E+00	1	1	0.00E+00								
82	144-62-7	Oxalic acid	7.51E-14	1	1	7.51E-14								
83	156-60-5	trans-1,2-Dichloroethylene	3.90E-22	1	1	3.90E-22								
84	1582-09-8	Trifluralin	3.94E-14	2000	100	1.97E-19								
85	1634-04-4	Methyl tert-butyl ether	3.51E-16	1	1	3.51E-16								
86	1836-75-5	Nitrofen	1.13E-11	2000	100	5.64E-17								
87	189-55-9	Dibenzo(a,i)pyrene	7.55E-13	2000	100	3.77E-18								
88	189-64-0	Dibenzo(a,h)pyrene	7.55E-13	2000	100	3.77E-18								
89	191-24-2	Benzo(g,h,i)perylene	1.13E-11	2000	100	5.64E-17								
90	191-30-0	Benzo(a,l)pyrene	7.55E-13	2000	100	3.77E-18								
91	192-65-4	Dibenzo(a,e)pyrene	7.55E-13	2000	100	3.77E-18								
92	193-39-5	Indeno(1,2,3-cd)pyrene	1.13E-11	2000	100	5.64E-17								
93	205-82-3	Benzo(j)fluoranthene	7.59E-13	2000	100	3.80E-18								
94	205-99-2	Benzo(b)fluoranthene	1.13E-11	2000	100	5.64E-17								
95	206-44-0	Fluoranthene	6.11E-12	2000	100	3.06E-17								
96	207-08-9	Benzo(k)fluoranthene	1.13E-11	2000	100	5.64E-17								
97	208-96-8	Acenaphthylene	3.94E-14	1	1	3.94E-14								
98	218-01-9	Chrysene	7.00E-12	2000	100	3.50E-17								
99	2234-13-1	Octachloronaphthalene	3.94E-14	2000	100	1.97E-19								
100	224-42-0	Dibenz[a,j]acridine	7.48E-13	2000	100	3.74E-18								
101	226-36-8	Dibenz[a,h]acridine	7.48E-13	2000	100	3.74E-18								
102	2385-85-5	Mirex	1.21E-17	1	1	1.21E-17								
103	25551-13-7	Trimethyl benzene	5.85E-20	1	1	5.85E-20								
104	26140-60-3	Terphenyls	3.34E-12	2000	100	1.67E-17								
105	27154-33-2	Trichlorofluoroethane	2.11E-26	1	1	2.11E-26								
106	287-92-3	Cyclopentane	1.24E-34	1	1	1.24E-34								
107	309-00-2	Aldrin	4.12E-14	2000	100	2.06E-19								
108	319-84-6	Hexachlorocyclohexane (Lindane) Alpha BHC	2.04E-14	1	1	2.04E-14								
109	319-85-7	Hexachlorocyclohexane (Lindane) Beta BHC	3.80E-14	2000	100	1.90E-19								
110	319-86-8	Delta-BHC	3.76E-14	2000	100	1.88E-19								
111	3697-24-3	5-Methylchrysene	4.89E-12	2000	100	2.45E-17								
112	3825-26-1	Ammonium perfluorooctanoate	3.94E-14	2000	100	1.97E-19								
113	4170-30-3	2-Butenaldehyde (2-Butenal or Crotonaldehyde)	8.77E-14	1	1	8.77E-14								
114	465-73-6	Isodrin	2.20E-15	1	1	2.20E-15								
115	50-00-0	Formaldehyde	1.05E-12	1	1	1.05E-12								
116	50-29-3	4,4-DDT	4.08E-14	2000	100	2.04E-19								
117	50-32-8	Benzo(a)pyrene	1.41E-13	2000	100	7.07E-19								
118	53-70-3	Dibenzo(a,h)anthracene	1.27E-15	2000	100	6.33E-21								
119	540-59-0	1,2-Dichloroethylene	5.85E-20	1	1	5.85E-20								
120	540-84-1	2,2,4-Trimethylpentane	0.00E+00	1	1	0.00E+00								
121	541-73-1	1,3-Dichlorobenzene	5.85E-20	1	1	5.85E-20								
122	56-23-5	Carbon tetrachloride	2.75E-24	1	1	2.75E-24								
123	563-80-4	3-Methyl-2-butanone	8.67E-15	1	1	8.67E-15								
124	56-49-5	3-Methylcholanthrene	0.00E+00	2000	100	0.00E+00								
125	56-55-3	Benzo(a)anthracene	6.11E-12	2000	100	3.06E-17								
126	57-14-7	1,1-Dimethylhydrazine	3.65E-13	1	1	3.65E-13								
127	58-89-9	gamma-BHC (Lindane)	2.41E-14	2000	100	1.20E-19								
128	58-90-2	2,3,4,6-Tetrachlorophenol	4.09E-13	1	1	4.09E-13								
129	591-78-6	2-Hexanone	8.67E-15	1	1	8.67E-15								
130	59-50-7	4-Chloro-3-methylphenol	4.89E-12	2000	100	2.45E-17								
131	59-89-2	N-Nitrosomorpholine	7.54E-13	1	1	7.54E-13								
132	602-87-9	5-Nitroacenaphthene	5.82E-13	2000	100	2.91E-18								
133	60-29-7	Ethyl ether	1.21E-17	1	1	1.21E-17								
134	603-34-9	Triphenylamine	4.65E-13	1	1	4.65E-13								
135	60-34-4	Methylhydrazine	8.41E-13	1	1	8.41E-13								
136	60-35-5	Acetamide	1.66E-13	1	1	1.66E-13								
137	60-57-1	Dieldrin	4.26E-14	2000	100	2.13E-19								
138	621-64-7	Di-n-Propylnitrosamine (N-Nitroso-di-n-propylamine)	3.82E-12	1	1	3.82E-12								
139	624-83-9	Methyl isocyanate	2.66E-18	1	1	2.66E-18								
140	627-13-4	Nitric acid, propyl ester	1.21E-17	1	1	1.21E-17								
141	62-75-9	N-Nitroso-N,N-dimethylamine (Dimethylnitrosamine)	1.09E-12	1	1	1.09E-12								

	A	B	C	D	E	F	G	H	I	J	K	L	M	N
1	Table B-13	PJV34 - Abated HLW PJM/RFD												
2			PJV32	HEPA 1	HEPA 2	PJV34								
3	CAS #	COPC	g/sec	DF	DF	g/sec								
142	630-20-6	1,1,1,2-Tetrachloroethane	1.30E-18	1	1	1.30E-18								
143	64-17-5	Ethyl alcohol	8.41E-13	1	1	8.41E-13								
144	64-18-6	Formic acid	7.59E-13	1	1	7.59E-13								
145	64-19-7	Acetic acid	7.54E-13	1	1	7.54E-13								
146	67-56-1	Methyl alcohol (Methanol)	8.41E-13	1	1	8.41E-13								
147	67-63-0	2-Propyl alcohol (Isopropanol; Propan-2-01)	8.78E-14	1	1	8.78E-14								
148	67-64-1	2-Propanone (Acetone)	1.96E-13	1	1	1.96E-13								
149	67-66-3	Chloroform	5.85E-20	1	1	5.85E-20								
150	67-72-1	Hexachloroethane	2.66E-19	1	1	2.66E-19								
151	684-16-2	Hexafluoroacetone	5.85E-20	1	1	5.85E-20								
152	71-23-8	n-Propyl alcohol	8.78E-14	1	1	8.78E-14								
153	71-36-3	n-Butyl alcohol	8.78E-14	1	1	8.78E-14								
154	71-43-2	Benzene	6.36E-21	1	1	6.36E-21								
155	71-55-6	Methyl chloroform (1,1,1-Trichloroethane)	2.48E-23	1	1	2.48E-23								
156	72-20-8	Endrin	3.26E-14	2000	100	1.63E-19								
157	72-43-5	Methoxychlor	2.53E-14	2000	100	1.27E-19								
158	72-54-8	4,4-DDD	3.26E-14	2000	100	1.63E-19								
159	72-55-9	4,4-DDE	2.23E-14	2000	100	1.11E-19								
160	74-83-9	Bromomethane (Methyl bromide)	5.85E-20	1	1	5.85E-20								
161	74-87-3	Chloromethane (Methyl chloride)	3.90E-22	1	1	3.90E-22								
162	74-97-5	Bromochloromethane	2.66E-18	1	1	2.66E-18								
163	74-99-7	Methylacetylene	1.77E-21	1	1	1.77E-21								
164	75-00-3	Chloroethane	3.90E-22	1	1	3.90E-22								
165	75-01-4	Vinyl chloride (1-Chloroethene)	1.25E-23	1	1	1.25E-23								
166	75-05-8	Acetonitrile	6.35E-14	1	1	6.35E-14								
167	75-07-0	Acetaldehyde	1.63E-13	1	1	1.63E-13								
168	75-09-2	Dichloromethane (Methylene chloride)	5.85E-20	1	1	5.85E-20								
169	75-12-7	Formamide	7.48E-13	1	1	7.48E-13								
170	75-15-0	Carbon disulfide	3.90E-22	1	1	3.90E-22								
171	75-21-8	Ethylene oxide (Oxirane)	1.99E-15	1	1	1.99E-15								
172	75-27-4	Bromodichloromethane	1.30E-18	1	1	1.30E-18								
173	75-34-3	1,1-Dichloroethane	5.85E-20	1	1	5.85E-20								
174	75-35-4	1,1-Dichloroethene (Vinylidene chloride)	2.75E-24	1	1	2.75E-24								
175	75-43-4	Dichlorofluoromethane	3.90E-22	1	1	3.90E-22								
176	75-45-6	Chlorodifluoromethane	2.75E-24	1	1	2.75E-24								
177	75-50-3	Trimethylamine	8.67E-15	1	1	8.67E-15								
178	75-52-5	Nitromethane	1.63E-13	1	1	1.63E-13								
179	75-55-8	2-Methylaziridine	3.99E-13	1	1	3.99E-13								
180	75-61-6	Difluorodibromomethane	2.75E-24	1	1	2.75E-24								
181	75-63-8	Trifluorobromomethane	0.00E+00	1	1	0.00E+00								
182	75-65-0	2-Methyl-2-propanol	8.78E-14	1	1	8.78E-14								
183	75-69-4	Trichlorofluoromethane	2.11E-26	1	1	2.11E-26								
184	75-71-8	Dichlorodifluoromethane	0.00E+00	1	1	0.00E+00								
185	75-99-0	2,2-Dichloropropionic acid	7.54E-13	1	1	7.54E-13								
186	76-03-9	Trichloroacetic acid	1.66E-13	1	1	1.66E-13								
187	76-11-9	1,1,1,2-Tetrachloro-2,2-difluoroethane	5.66E-34	1	1	5.66E-34								
188	76-12-0	1,1,2,2-Tetrachloro-1,2-difluoroethane	9.60E-26	1	1	9.60E-26								
189	76-13-1	1,2,2-Trichloro-1,1,2-trifluoroethane (Freon 113)	0.00E+00	1	1	0.00E+00								
190	76-14-2	1,2-Dichloro-1,1,2,2-tetrafluoroethane	0.00E+00	1	1	0.00E+00								
191	76-15-3	Chloropentafluoroethane	0.00E+00	1	1	0.00E+00								
192	76-44-8	Heptachlor	7.72E-17	1	1	7.72E-17								
193	78-83-1	2-Methylpropyl alcohol (Isobutyl alcohol)	3.99E-13	1	1	3.99E-13								
194	78-87-5	1,2-Dichloropropane	5.85E-20	1	1	5.85E-20								
195	78-92-2	1-Methylpropyl alcohol (2-Butanol)	8.78E-14	1	1	8.78E-14								
196	78-93-3	Methyl ethyl ketone (MEK, 2-Butanone)	3.59E-14	1	1	3.59E-14								
197	79-00-5	1,1,2-Trichloroethane	2.66E-18	1	1	2.66E-18								
198	79-01-6	Trichloroethylene	4.37E-22	1	1	4.37E-22								
199	79-09-4	Propionic acid	4.77E-12	1	1	4.77E-12								
200	79-10-7	2-Propenoic acid	4.77E-12	1	1	4.77E-12								
201	79-20-9	Methyl acetate	3.94E-14	1	1	3.94E-14								
202	79-34-5	1,1,2,2-Tetrachloroethane	3.51E-16	1	1	3.51E-16								
203	8001-35-2	Toxaphene	5.47E-14	2000	100	2.73E-19								
204	82-68-8	Pentachloronitrobenzene (PCBN or quintobenzene)	1.63E-13	1	1	1.63E-13								
205	83-32-9	Acenaphthene	9.06E-15	1	1	9.06E-15								
206	84-66-2	Diethyl phthalate	6.97E-13	1	1	6.97E-13								
207	84-74-2	Dibutyl phthalate	8.85E-12	2000	100	4.42E-17								
208	85-01-8	Phenanthrene	1.63E-13	1	1	1.63E-13								
209	85-68-7	Butylbenzyl phthalate	8.85E-12	2000	100	4.42E-17								
210	86-73-7	Fluorene	3.94E-14	2000	100	1.97E-19								
211	87-68-3	Hexachlorobutadiene	3.44E-22	1	1	3.44E-22								
212	87-86-5	Pentachlorophenol	7.54E-13	1	1	7.54E-13								
213	88-06-2	2,4,6-Trichlorophenol	3.82E-12	1	1	3.82E-12								
214	88-72-2	2-Nitrotoluene	8.02E-14	1	1	8.02E-14								
215	88-75-5	2-Nitrophenol	3.65E-13	1	1	3.65E-13								
216	88-85-7	2-sec-Butyl-4,6-dinitrophenol (Dinoseb)	1.29E-11	2000	100	6.43E-17								
217	88-89-1	Picric acid	1.12E-11	2000	100	5.61E-17								
218	91-20-3	Naphthalene	3.32E-17	1	1	3.32E-17								
219	91-22-5	Quinoline	5.82E-13	1	1	5.82E-13								
220	91-58-7	2-Chloronapthalene	1.60E-15	1	1	1.60E-15								
221	92-52-4	1,1`-Biphenyl	1.60E-15	1	1	1.60E-15								
222	92-93-3	4-Nitrobiphenyl	3.82E-12	2000	100	1.91E-17								
223	93-72-1	Silvex (2,4,5-TP)	7.55E-13	2000	100	3.77E-18								
224	93-76-5	2,4,5-T	7.55E-13	2000	100	3.77E-18								
225	94-75-7	2,4-D and esters (160C typed)	7.54E-13	1	1	7.54E-13								
226	95-13-6	Indene	5.90E-18	1	1	5.90E-18								
227	95-47-6	o-Xylene	5.85E-20	1	1	5.85E-20								
228	95-48-7	o-Cresol (2-Methylphenol)	1.28E-13	1	1	1.28E-13								
229	95-49-8	2-Chlorotoluene	2.66E-19	1	1	2.66E-19								
230	95-50-1	o-Dichlorobenzene (1,2-Dichlorobenzene)	1.30E-18	1	1	1.30E-18								
231	95-57-8	2-Chlorophenol	3.99E-13	1	1	3.99E-13								
232	95-95-4	2,4,5-Trichlorophenol	5.82E-13	1	1	5.82E-13								
233	96-22-0	3-Pentanone	8.67E-15	1	1	8.67E-15								
234	96-69-5	Bis(3-tert-butyl-4-hydroxy-6-methyl-phenyl)sulfide	2.66E-19	2000	100	1.33E-24								
235	98-51-1	p-tert-Butyltoluene	1.13E-22	1	1	1.13E-22								
236	98-82-8	Cumene	1.77E-21	1	1	1.77E-21								
237	98-83-9	alpha-Methylstyrene	5.85E-20	1	1	5.85E-20								
238	98-86-2	Acetophenone	3.89E-13	1	1	3.89E-13								
239	98-95-3	Nitrobenzene	3.65E-13	1	1	3.65E-13								
240						5.68E-11								

C

Appendix C
Calculation: Integrated Emissions Baseline Report Non-SSFM Represented Constituents Emissions Rate Estimation

24590-WTP-M4C-FRP-00003, Rev A

Calculation Cover Sheet

Sheet i

RIVER PROTECTION PROJECT-WASTE TREATMENT PLANT		JOB NO.:	24590
CALC NO.	24590-WTP-M4C-FRP-00003	GROUP	Process Operations
SUBJECT	Integrated Emissions Baseline Report Non-SSFM Represented Constituents Emissions Rate Estimation		

CALCULATION STATUS DESIGNATION	☒ PRELIMINARY	☐ COMMITTED	☐ CONFIRMED
	☐ SUPERSEDED		☐ VOIDED

SOFTWARE APPLICATION	N/A	QAS	PROGRAM NAME	VERSION/RELEASE NO.
	☒	☐ YES ☐ NO		

Notes/Comments

Calculations were performed on a Compaq Personal Computer using the software Microsoft Excel® 97 SR-2

John Cook and Cuong Nguyen checked the whole calculation for the accuracy and procedural compliance.

NO.	REASON FOR REVISION	TOTAL NO. OF SHEETS	LAST SHEET NO.	BY	CHECKED	APPROVED/ ACCEPTED	DATE
A	Initial Issue	69	69	E. Berrios	J. Cook/C. Nguyen CDN	O. Block	03/13/03

RECORD OF REVISIONS

Best Available Copy

Contents

1 Objective 3
2 Inputs 3
3 Background 5
4 Applicable Codes and Standards 5
5 Methodology 5
6 Assumptions 6
7 Calculations 6
8 Results and Conclusions 8
9 References 10
10 Attachments 10
Attachment 1 – Summary Radioactive Properties for Selected Radionuclides 11
Attachment 2 – Periodic Table of the Elements 14
Appendix A Steady State Flowsheet Model Stream Reports 15
Appendix B Calculations 54

List of Tables

Table A-1 FRP14 Stream Report 16
Table A-2 PJV04 Stream Report 18
Table A-3 FEP06 Stream Report 20
Table A-4 PVP01 Stream Report 22
Table A-5 TLP01 Stream Report 24
Table A-6 LMP06 Stream Report 26
Table A-7 LVP01 Stream Report 28
Table A-8 HMP06 Stream Report 30
Table A-9 HOP10 Stream Report 32
Table A-10 PJV32 Stream Report 34
Table A-11 PVP12 Stream Report 36
Table A-12 PJV11 Stream Report 38

Table A-13 LVP26 Stream Report 40
Table A-14 HOP33 Stream Report 42
Table A-15 PJV34 Stream Report 44
Table A-16 LFP06 Stream Report 46
Table A-17 RLD34 Stream Report 48
Table A-18 RLD33 Stream Report 50
Table A-19 RLD32 Stream Report 52
Table B-1 Feed Rate Calculation 55
Table B-2 PJV04 Calculation 56
Table B-3 FEP06 Calculation 57
Table B-4 PVP01 Calculation 58
Table B-5 TLP01 Calculation 59
Table B-6 LMP06 Calculation 60
Table B-7 LVP01 Calculation 61
Table B-8 HMP06 Calculation 62
Table B-9 HOP10 Calculation 63
Table B-10 PJV32 Calculation 64
Table B-11 PVP12 Calculation 65
Table B-12 PJV11 Calculation 66
Table B-13 LVP26 Calculation 67
Table B-14 HOP33 Calculation 68
Table B-15 PJV34 Calculation 69

1 Objective

The objective of this calculation is to estimate the Waste Treatment Plant (WTP) emissions of non-represented constituents in the Steady State Flowsheet Model (SSFM) based on the results from the representative compounds. The results from this calculation will be reported in the next revision of the *Integrated Emissions Baseline Report for the River Protection Project Waste Treatment Plant* (RPT-W375-ES00001) scheduled to be released in May 2003 and will be used in support of air permitting and risk assessment.

2 Inputs

- Emission estimates for the non-represented compounds are based on the results from their representative compounds as determined in RPT-W375-ES00001 Section 7.4. A summary of the non-represented compounds and their representative constituents is presented below. This information is based on Table 7 of RPT-W375-ES00001.

Representative Compounds for Inorganics and Radionuclides

Compound	Representative Compound	Compound	Representative Compound
Be	Zr+4	134Cs	137Cs
CN	PO4-3	137mBa	137Cs
Co	60Co	226Ra	Zr+4
Mo	Bi+3	227Ac	Zr+4
Rh	Zr+4	228Ra	Zr+4
Sb	125Sb	229Th	232Th
Se	F-	231Pa	Zr+4
Sn	126Sn	232U	233U
Ta	Zr+4	242Pu	241Pu
Tl	F-	243Am	241Am
U	234U	59Ni	63Ni
V	Bi+3	79Se	F-
W	Zr+4	90Y	90Sr
Y	90Sr	93Zr	Zr+4
106Ru	F-	93mNb	Zr+4
113mCd	Cd+2	242Cm	243Cm

- Feed concentration for nonradioactive Tin (Sn) is the same as the feed concentration for its radioactive counterpart, ^{126}Sn. Conversion factor for Ci to kg for radioactive Sn is: 29 Ci Sn/kg Sn (see Attachment 1 from http://www.ead.anl.gov/pub/doc/Tbl2RadProp.pdf). Feed concentration is 4.03E-06 Ci/mol Na for LAW and 1.82E-04 Ci/mol Na for HLW (24590-WTP-M4C-FRP-00001, Section 8).
- Non-represented constituents feed concentrations are specified in the *Updated Emissions Run Feed Vector* (24590-WTP-M4C-FRP-00001, Section 8). A summary of these feed concentrations is presented below.

CALCULATION SHEET

PROJECT: RPP-WTP
JOB NO.: 24590
CALC NO.: 24590-WTP-M4C-FRP-00003
SHEET REV: A
SHEET NO.: 4

BY: E. Berrios
DATE: 03/13/03

SUBJECT: Integrated Baseline Emissions Report Non-SSFM Represented Constituents Emissions Rate Estimation

Non-represented Compounds Feed Concentrations

Analyte	Supernate mol/mol Na Bq/mol Na	Solids mol/mol Na Bq/mol Na
Be	1.21E-04	8.74E-03
CN	2.89E-04	7.45E-02
Co	1.67E-04	9.25E-03
Mo	2.67E-04	8.20E-03
Rh	5.54E-05	1.53E-03
Sb	1.07E-04	8.35E-03
Se	2.04E-04	7.97E-03
Ta	2.95E-05	2.01E-04
Tl	2.13E-04	2.67E-03
U	6.18E-04	7.12E-02
V	2.14E-04	7.61E-04
W	2.01E-04	1.58E-03
Y	2.02E-05	2.18E-03
106Ru	7.78E-01	4.37E+06
113mCd	8.26E+05	1.36E+07
134Cs	3.70E+07	3.15E+06
137mBa	1.36E+10	3.28E+09
226Ra	1.19E+00	1.52E+02
227Ac	1.32E+01	7.68E+05
228Ra	2.31E+03	1.59E+05
229Th	5.43E+01	6.63E+03
231Pa	3.85E+01	1.69E+06
232U	1.30E+03	1.36E+05
242Pu	2.79E-01	1.44E+03
243Am	7.29E+00	3.95E+04
59Ni	1.29E+04	2.27E+06
79Se	1.13E+04	1.26E+05
90Y	7.70E+08	3.71E+10
93Zr	1.92E+05	5.46E+06
93mNb	1.52E+05	4.92E+06
242Cm	4.49E+02	1.62E+05

- Streams analyzed in this calculation are FRP14, PJV04, FEP06, PVP01, TLP01, LMP06, LVP01, HMP06, HOP10, PJV32, PJV34, PVP12, PJV11, LVP26, and HOP33. Appendix A shows the stream reports for these streams. For stream LVP01, which is the LAW Vessel Vents, the total mass flow through this stream is the summation of streams LFP06, RLD34, RLD33, RLD32.
- Feed stream to Pretreatment is based on a sodium molarity of 4 (i.e., 4 mol Na /l) as with this conditions, the feed is treated through the feed evaporator.
- Molecular weights (see Attachment 2)

Analyte	MW g/mol	Analyte	MW g/mol
Be	9.0	134Cs	134
CN	26.0	137mBa	137

Analyte	MW g/mol	Analyte	MW g/mol
Co	58.9	226Ra	226
Mo	95.9	227Ac	227
Rh	102.9	228Ra	228
Sb	121.7	229Th	229
Se	78.9	231Pa	231
Sn	118.7	232U	232
Ta	180.9	242Pu	242
Tl	204.3	243Am	243
U	238.0	59Ni	59
V	50.9	79Se	79
W	183.8	90Y	90
Y	88.9	93Zr	93
106Ru	106	93mNb	93
113mCd	113	242Cm	242

- As HLW has the highest feed concentrations, all feed rates were based on HLW concentrations to obtain a bounding estimate.

3 Background

The *Integrated Emissions Baseline Report for the River Protection Project Waste Treatment Plant* (RPT-W375-ES00001) estimated emissions from the Waste Treatment Plant (WTP) by using the SSFM. Not all reported emissions constituents were calculated by using the SSFM as inclusion of all the constituents would increase the complexity of the model. Instead, constituents were separated into groups and representative from each group were selected and actually modeled in the SSFM. This calculation generates the estimated emissions for the constituents not represented in the SSFM.

4 Applicable Codes and Standards

NA

5 Methodology

The following methodology was used to estimate the emissions for the constituents not represented in the SSFM.

- HLW and LAW feed concentrations in mol/mol Na (for inorganics) and Bq/mol Na (for radionuclides) for the non-represented compounds in the supernate and solids were obtained from the *Updated Emissions Run Feed Vector* (24590-WTP-M4C-FRP-00001). These are presented in Section 2, 3rd bullet.
- HLW and LAW feed streams conditions to Pretreatment (Stream # FRP14) were obtained from the model run request titled *Emissions Maximum Case Runs with Updated Parameters* (24590-WTP-MRQ-PT-03-002). These are presented in Appendix A.
- Non-represented constituents feed rates were calculated based on stream volumetric flowrate (in liters/hr), their feed concentration (in mol/mol Na or Bq/mol Na), and feed sodium molarity. Feed rates in the supernate and solids phase were added together to obtain the total feed rate to the plant (stream # FRP14).
- Feed rates were converted to lb/day for inorganics and Ci/day for radionuclides (stream # FRP14).
- The performance factor (PF) for the representative compounds was calculated per stream relative to the feed stream, FRP14. This was done by obtaining the representative compounds mass feed rate (or radioactivity rate)

from stream report # FRP14 and its mass flowrate (or radioactivity rate) at the stream being evaluated. The PF was calculated by dividing the constituent's mass feed rate (or radioactivity rate) by the specified stream's constituent mass flowrate (or radioactivity rate).

$$PF = \frac{\text{mass rate at point of interest [representative compound]}}{\text{mass rate at waste feed [representative compund]}}$$

- Once the PF was calculated, it was applied to the feed rate for the non-represented compound in order to obtain the mass flowrate of the constituent at that stream.

6 Assumptions

NA

7 Calculations

Calculations were performed using the Microsoft Excel® 97 spreadsheet on a Compaq PC workstation. For illustration purposes, the calculation for one inorganic (Be) and one radionuclide (^{106}Ru) is shown below. Calculations are only shown for the feed stream (FRP14), PJV04, and FEP06. No others are shown, as the calculation process is the same. Appendix B shows the calculation for the rest of the constituents.

Feed Rates

1. Calculate total feed rate in liters/hr for stream FRP14

Feed Streams conditions (refer to Table B-1):
WTP Feed (FRP14)
- Na molarity: 4 (cell M4)
- Volumetric Flowrate: 52 ft^3/hr (cell M6)

Vol. flowrate in l/hr:
52 ft^3/hr * 28.317 l/ft^3 = 1473 l/hr (cell O6)

2. Example calculation: total feed rate of non-represented inorganic constituent, Be.

Feed rate is based on HLW concentration as this gives a bounding release estimate.
Be WTP feed rate (FRP14 - refer to Table B-1):
Feed Concentration: 8.74E-03 mol/mol Na (cell I4)
8.74E-03 mol/mol Na (cell I4)* 4 mol Na/l (cell M4)* 1473 l/hr (cell O6) = 51.5 mol/hr (cell K4)

Be total feed concentration (FRP14 - refer to Table B-2):
MW Be: 9 g/mole (cell B4)
51.5 mol/hr (cell C4) * 9 g/mole (cell B4) * 1kg/1000g * 2.2 lb/kg * 24 hr/d = 24.5 lb/d (cell D4)

3. Example calculation: total feed rate of non-represented radionuclide constituent, ^{106}Ru

^{106}Ru feed rate (FRP14 - refer to Table B-1):
Feed Concentration: 4.37E+06 Bq/mol Na (cell I19)
4.37E+06 Bq/mol Na (cell I19)* 4 mol Na/l (cell M4)* 1473 l/hr (cell O6)= 2.57E+10 Bq/hr (cell K19)

Total ^{106}Ru feed concentration (FRP14 - refer to Table B-2):
2.57E+10 Bq/hr (cell C19) * 1 Ci/3.7E+10 Bq * 24 hr/d = 16.7 Ci/d (cell D19)

4. Calculate the concentration of tin (Sn) in the LAW and HLW feeds

Non-radioactive tin (Sn) feed concentration is equivalent to the radioactive tin feed concentration.
126Sn feed (refer to Table B-1 for all cell references shown below):
1.49E+05 Bq/mol Na LAW Feed (cell B39) * 1 Ci / 3.7E+10 Bq = 4.03E-06 Ci/mol Na (cell E39)
6.72E+06 Bq/mol Na HLW Feed (cell B40) * 1 Ci / 3.7E+10 Bq = 1.82E-04 Ci/mol Na (cell E40)
Conversion factor for tin: 29 Ci Sn/kg Sn (cell B42)
LAW: 4.03E-06 Ci/mol Na (cell E39) * 1 kg Sn / 29 Ci Sn (cell B42) = 1.39E-07 kg/mol Na (cell B42)
HLW: 1.82E-04 Ci/mol Na (cell E40) * 1 kg Sn / 29 Ci Sn (cell B42) = 6.26E-06 kg/mol Na (cell B43)
Sn MW = 118.71 g/mol (cell B44)
LAW feed: 1.39E-07 kg/mol Na (cell B42) * 1000g/kg * 1 mol/118.71 g (cell B44) = 1.17E-06 mol/mol Na (cell B45)
HLW feed: 6.26E-06 kg/mol Na (cell B43) * 1000g/kg * 1 mol/118.71 g (cell B44) = 5.28E-05 mol/mol Na (cell B46)

Stream # PJV04 Calculation

Be (refer to Table B-2)
Feed rate (FRP14): 51.5 mol/hr (cell C4 from Table B-2)
51.5 mol/hr (cell C4) * 9 g/mol (cell B4) * 24 hr/d * 2.2 lb / 1000 g = 24.5 lb/d (cell D4 from Table B-2)
Representative compound: Zr+4
Zr+4 feed rate from FRP14 (from Table A-1): 3.65E+02 lb/d (cell G4 from Table B-2)
Zr+4 mass flowrate in PJV04 (from Table A-2): 2.25E-02 lb/d (cell I4 from Table B-2)
PF = 3.65E+02 lb/d (cell G4) / 2.25E-02 lb/d (cell I4) = 1.62E+04 (cell J4 from Table B-2)
Be mass flowrate in PJV04 = 24.5 lb/d (cell D4) / 1.62E+04 (cell J4) = 1.51E-03 lb/d
Converting to g/sec: 1.51E-03 lb/d * 1d / 24hr * 1hr / 3600 sec * 1000g / 2.2 lb = 7.93E-06 g/sec (cell K4 from Table B-2)

106Ru (refer to Table B-2)
Feed rate (FRP14): 16.7 Ci/d (cell D19 from Table B-2)
Representative compound: F-
F- feed rate from FRP14 (from Table A-1): 6.93E+02 lb/d (cell G19 from Table B-2)
F- mass flowrate in PJV04 (from Table A-2): 6.82E-02 lb/d (cell I19 from Table B-2)
PF = 6.93E+02 (cell G19) /6.82E-02 (cell I19)= 1.02E+04 (cell J19 from Table B-2)
106Ru mass flowrate in PJV04 = 16.7 Ci/d (cell D19) / 1.02E+04 (cell J19)= 1.64E-03 Ci/d (cell K19 from Table B-2)

Stream # FEP06 Calculation

Be (refer to Table B-3)
Feed rate (FRP14): 51.5 mol/hr (cell C4)
51.5 mol/hr (cell C4) * 9 g/mol (cell B4) * 24 hr/d * 2.2 lb / 1000 g = 24.5 lb/d (cell D4 from Table B-3)
Representative compound: Zr+4
Zr+4 feed rate from FRP14 (from Table A-1): 3.65E+02 lb/d (cell G4 from Table B-3)
Zr+4 mass flowrate in FEP06 (from Table A-3): 3.69E-01 lb/d (cell I4 from Table B-3)
PF = 3.65E+02 lb/d (cell J4) /3.69E-01 lb/d (cell I4) = 9.90E+02 (cell J4 from Table B-3)

Be mass flowrate in FEP06 = 24.5 lb/d / 9.90E+02 = 2.47E-02 lb/d
Converting to g/sec: 2.47E-02 lb/d * 1d / 24hr * 1hr / 3600 sec * 1000g / 2.2 lb = 1.30E-04 g/sec (cell K4 from Table B-3)

106Ru (refer to Table B-3)
Feed rate (FRP14): 16.7Ci/d (cell D19 from Table B-3)
Representative compound: F-
F- feed rate from FRP14 (from Table A-1): 6.93E+02 lb/d (cell G19 from Table B-3)
F- mass flowrate in FEP06 (from Table A-3): 4.54E-02 lb/d (cell I19 from Table B-3)
PF = 6.93E+02 lb/d (cell G19) / 4.54E-02 lb/d (cell I19) = 1.53E+04 (cell J19 from Table B-3)
106Ru mass flowrate in FEP06 = 16.7 Ci/d (cell D19)/ 1.53E+04 (cell J19) = 1.09E-03 Ci/d (cell K19 from Table B-3)

The rest of the calculations are shown in Appendix B.

8 Results and Conclusions

A summary of the results per constituent is presented below. Emissions rates from the non-represented compounds in the SSFM have been estimated in this calculation. These rates will be reported in the next revision of the *Integrated Emissions Baseline Report for the River Protection Project Waste Treatment Plant* (RPT-W375-ES00001). This calculation will be updated each time a new official emissions profile is generated.

CALCULATION SHEET

BY: E. Barrios
DATE: 03/13/03

PROJECT: WTP
JOB NO.: 24590
CALC NO.: 24590-WTP-M4C-FRP-00003
SHEET REV:A
SHEET NO.:9

SUBJECT: Integrated Baseline Emissions Report Non-SSFM Represented Constituents Emissions Rate Estimation

Summary of Calculation Results

	FRP14	FRP14	PJV04	FEP06	PVP01	TLP01	LMP06	LVP01	HMP06	HOP10	PJV32	PVP12	PJV11	LVP26	HOP33	PJV34
Inorganics	mol/hr	g/sec	g/sec	g/sec	g/sec	g/sec	g/sec	g/sec	g/sec	g/sec	g/sec	g/sec	g/sec	g/sec	g/sec	g/sec
Be	5.15E+01	1.29E-01	7.93E-06	1.30E-04	7.50E-07	6.10E-06	2.89E-03	1.66E-06	4.19E-04	5.70E-09	1.31E-11	5.63E-15	7.93E-12	4.82E-11	7.80E-14	6.55E-17
CN	4.39E+02	3.17E+00	2.83E-04	4.81E-03	3.94E-05	2.56E-03	6.46E-02	9.83E-06	1.43E-02	6.87E-09	5.73E-11	2.96E-13	2.83E-10	2.58E-13	3.82E-16	2.86E-16
Co	5.45E+01	8.92E-01	5.42E-05	8.94E-04	4.60E-06	2.03E-05	5.32E-05	4.06E-08	4.42E-03	5.49E-08	9.41E-11	3.46E-14	5.42E-11	4.16E-12	3.46E-12	4.70E-16
Mo	4.83E+01	1.29E+00	8.50E-05	3.56E-04	5.82E-06	4.80E-05	1.96E-03	7.49E-07	1.10E-02	1.24E-07	1.24E-10	4.37E-14	8.50E-11	1.26E-10	7.08E-12	6.21E-16
Rh	9.02E+00	2.58E-01	1.59E-05	2.60E-04	1.50E-06	1.22E-05	5.78E-03	3.33E-06	8.39E-04	1.14E-08	2.62E-11	1.13E-14	1.59E-11	9.64E-11	1.56E-13	1.31E-16
Sb	4.92E+01	1.66E+00	1.11E-04	4.64E-04	7.67E-06	1.33E-04	2.76E-03	1.06E-06	1.40E-02	1.57E-07	1.58E-10	5.76E-14	1.11E-10	3.40E-10	1.72E-11	7.89E-16
Se	4.70E+01	1.03E+00	1.01E-04	6.74E-05	9.92E-06	4.52E-05	1.83E-01	4.70E-06	3.87E-02	5.68E-07	9.37E-11	7.45E-14	1.01E-10	3.05E-09	7.21E-15	4.69E-16
Sn	3.11E-01	1.03E-02	7.06E-07	2.97E-06	5.21E-08	1.18E-06	1.22E-05	9.33E-09	3.92E-05	4.86E-10	8.33E-13	3.91E-16	7.06E-13	1.53E-13	5.47E-15	4.16E-18
Ta	1.18E+00	5.95E-02	3.66E-06	6.01E-05	3.47E-07	2.82E-06	1.33E-03	7.69E-07	1.94E-04	2.64E-09	6.05E-12	2.60E-15	3.66E-12	2.23E-11	3.60E-14	3.03E-17
Tl	1.57E+01	8.93E-01	8.79E-05	5.85E-05	8.61E-06	3.92E-05	1.59E-01	4.08E-06	3.36E-02	4.92E-07	8.13E-11	6.46E-14	8.79E-11	2.65E-09	6.25E-15	4.07E-16
U	4.20E+02	2.77E+01	2.03E-03	3.40E-02	2.44E-04	1.91E-02	4.98E-02	3.80E-05	8.93E-02	1.11E-06	1.90E-09	1.83E-12	2.03E-09	6.24E-10	1.25E-11	9.48E-15
V	4.48E+00	6.34E-02	4.19E-06	1.75E-05	2.87E-07	2.37E-06	9.64E-05	3.69E-08	5.43E-04	6.09E-09	6.12E-12	2.15E-15	4.19E-12	6.18E-12	3.49E-13	3.06E-17
W	9.31E+00	4.75E-01	2.93E-05	4.80E-04	2.77E-06	2.25E-05	1.07E-02	6.14E-06	1.55E-03	2.11E-08	4.83E-11	2.08E-14	2.93E-11	1.78E-10	2.88E-13	2.42E-16
Y	1.28E+01	3.17E-01	1.95E-05	1.40E-06	1.17E-06	3.49E-08	8.09E-05	3.09E-08	3.12E-03	3.50E-08	3.51E-11	8.78E-15	1.95E-11	1.01E-12	4.36E-13	1.75E-16
Radionuclides	Bq/hr	Ci/d	Ci/d	Ci/d	Ci/d	Ci/d	Ci/d	Ci/d	Ci/d	Ci/d	Ci/d	Ci/d	Ci/d	Ci/d	Ci/d	Ci/d
106Ru	2.57E+10	1.67E+01	1.64E-03	1.09E-03	1.61E-04	7.33E-04	2.97E+00	4.02E-07	6.29E-01	9.21E-06	1.52E-09	1.21E-12	1.64E-09	4.96E-08	1.17E-13	7.61E-15
113mCd	8.01E+10	5.20E+01	4.34E-03	3.27E-03	3.79E-04	1.35E-03	2.98E+00	6.43E-07	2.79E+00	2.82E-05	6.37E-09	2.85E-12	4.34E-09	1.16E-07	9.91E-10	3.19E-14
134Cs	1.86E+10	1.20E+01	9.86E-04	1.96E-07	7.80E-05	1.93E-11	6.03E-05	3.70E-11	4.15E-01	4.30E-06	1.77E-09	5.86E-13	9.86E-10	4.19E-12	2.88E-10	8.86E-15
137mBa	1.93E+13	1.25E+04	1.03E+00	2.04E-04	8.13E-02	2.01E-08	6.28E-02	3.85E-08	4.32E+02	4.48E-03	1.84E-06	6.10E-10	1.03E-06	4.36E-09	3.00E-07	9.22E-12
226Ra	8.96E+05	5.81E-04	3.58E-08	5.87E-07	3.38E-09	2.75E-08	1.30E-05	3.95E-11	1.89E-06	2.57E-11	5.91E-14	2.54E-17	3.58E-14	2.17E-13	3.52E-16	2.95E-19
227Ac	4.53E+09	2.94E+00	1.81E-04	2.96E-03	1.71E-05	1.39E-04	6.58E-02	2.00E-07	9.56E-03	1.30E-07	2.99E-10	1.28E-13	1.81E-10	1.10E-09	1.78E-12	1.49E-15
228Ra	9.37E+08	6.08E-01	3.74E-05	6.14E-04	3.54E-06	2.88E-05	1.36E-02	4.13E-08	1.98E-03	2.69E-08	6.18E-11	2.66E-14	3.74E-11	2.27E-10	3.68E-13	3.09E-16
229Th	3.91E+07	2.53E-02	1.69E-06	2.82E-05	1.69E-07	4.51E-06	2.32E-05	1.77E-08	1.04E-04	1.29E-09	2.21E-12	1.27E-15	1.69E-12	2.90E-13	1.45E-14	1.10E-17
231Pa	9.96E+09	6.46E+00	3.98E-04	6.52E-03	3.76E-05	3.06E-04	1.45E-01	4.39E-07	2.10E-02	2.86E-07	6.57E-10	2.82E-13	3.98E-10	2.42E-09	3.91E-12	3.28E-15
232U	8.01E+08	5.20E-01	4.49E-05	7.60E-04	6.59E-06	7.27E-04	1.90E-03	7.61E-09	7.04E-04	8.74E-09	1.50E-11	4.95E-14	4.49E-11	2.38E-11	9.83E-14	7.48E-17
242Pu	8.48E+06	5.50E-03	3.32E-07	1.48E-09	1.94E-08	4.40E-12	4.38E-08	1.76E-13	2.76E-05	3.42E-10	5.86E-13	1.45E-16	3.32E-13	5.49E-16	3.85E-15	2.93E-18
243Am	2.33E+08	1.51E-01	9.12E-06	1.08E-07	5.31E-07	1.44E-10	1.02E-06	4.08E-12	7.58E-04	9.39E-09	1.61E-11	3.98E-15	9.12E-12	1.27E-14	1.06E-13	8.04E-17
59Ni	1.34E+10	8.68E+00	5.70E-04	3.23E-04	3.90E-05	7.89E-05	1.35E-02	2.43E-08	8.50E-02	9.41E-07	8.62E-10	2.93E-13	5.70E-10	5.74E-10	4.01E-11	4.31E-15
79Se	7.42E+08	4.82E-01	4.74E-05	3.16E-05	4.64E-06	2.11E-05	8.57E-02	1.16E-08	1.81E-02	2.66E-07	4.39E-11	3.49E-14	4.74E-11	1.43E-09	3.37E-15	2.19E-16
90Y	2.19E+14	1.42E+05	8.74E+00	6.27E-01	5.23E-01	1.56E-02	3.62E+01	7.27E-05	1.40E+03	1.56E-02	1.57E-05	3.93E-09	8.74E-06	4.52E-07	1.95E-07	7.84E-11
93Zr	3.22E+10	2.09E+01	1.28E-03	2.11E-02	1.22E-04	9.88E-04	4.68E-01	1.42E-06	6.80E-02	9.24E-07	2.12E-09	9.12E-13	1.28E-09	7.81E-09	1.26E-11	1.06E-14
93mNb	2.90E+10	1.88E+01	1.16E-03	1.90E-02	1.09E-04	8.90E-04	4.22E-01	1.28E-06	6.12E-02	8.33E-07	1.91E-09	8.22E-13	1.16E-09	7.03E-09	1.14E-11	9.56E-15
242Cm	9.55E+08	6.19E-01	3.74E-05	6.16E-04	3.12E-06	7.77E-08	3.35E-07	1.34E-12	3.11E-03	3.86E-08	6.60E-11	2.34E-14	3.74E-11	4.20E-15	4.34E-13	3.30E-16

9 References

Project Documents

24590-WTP-M4C-FRP-00001, Rev 0A, *Updated Emissions Run Feed Vector*, Section 8

24590-WTP-MRQ-PT-03-002, Rev 0, *Emissions Maximum Case Runs with Updated Parameters*, Results section

RPT-W375-ES00001, Rev 1, *Integrated Emissions Baseline Report for the River Protection Project Waste Treatment Plant*, Section 7.4 and Table 7

Other Documents

Human Health Fact Sheet, ANL, July 2002, http://www.ead.anl.gov/pub/doc/Tbl2RadProp.pdf (Attachment 1)

Gillespie, R and others, 1986, *Chemistry*, Allyn and Bacon, Inc, Boston, inside cover page (Attachment 2)

10 Attachments

Attachment 1 – Summary Radioactive Properties for Selected Radionuclides

Attachment 2 – Periodic Table of the Elements

ATTACHMENT #1

CALC NO. 24590-WTP-M4C-FRP-00003
REV: A
SHEET NO.: 11

TABLE 2. Summary Radioactive Properties for Selected Radionuclides

Isotope	Half-Life	Specific Activity *(Ci/g)*	Decay Mode	Radiation Energy *(MeV)*		
				Alpha *(α)*	Beta *(β)*	Gamma *(γ)*
Americium-241	430 yr	3.5	α	5.5	0.052	0.033
Americium-242m	150 yr	9.8	IT	0.025	0.044	0.051
Americium-242	*16 hr*	*820,000*	*β, EC*	-	*0.18*	*0.018*
Americium-243	7,400 yr	0.20	α	5.3	0.022	0.055
Neptunium-239	*2.4 days*	*230,000*	*β*	-	*0.26*	*0.17*
Berkelium-247	1,400 yr	1.1	α	5.6	0.061	0.11
Californium-249	350 yr	4.1	α	5.8	0.043	0.33
Californium-251	900 yr	1.6	α	5.8	0.020	0.13
Cadmium-109	1.3 yr	2,600	EC	-	0.083	0.026
Cadmium-113[n]	9.3×10^{15} yr	3.4×10^{-13}	β	-	0.093	-
Cadmium-113m	14 yr	240	β	-	0.019	-
Carbon-14[n]	5.700 yr	4.5	β	-	0.049	-
Cesium-134	2.1 yr	1,300	β	-	0.16	1.6
Cesium-135	2.3 million yr	0.0012	β	-	0.067	-
Cesium-137	30 yr	88	β	-	0.19	-
Barium-137m (95%)	*2.6 min*	*540 million*	*IT*	-	*0.065*	*0.60*
Chlorine-36	300,000 yr	0.033	β, EC	-	0.027	<0.001
Cobalt-57	270 days	8,600	EC	-	0.019	0.13
Cobalt-60	5.3 yr	1,100	β	-	0.097	2.5
Curium-242	160 days	3,400	α	6.1	0.010	0.0018
Curium-243	29 yr	52	α	5.8	0.14	0.13
Curium-244	18 yr	82	α	5.8	0.086	00017
Curium-245	8,500 yr	0.17	α	5.4	0.065	0.096
Curium-246	4,700 yr	0.31	α	5.4	0.0080	0.0015
Curium-247	16 million yr	0.000094	α	4.9	0.021	0.32
Curium-248	340,000 yr	0.0043	α	4.7	0.0060	0.0012
Curium-250	6,900 yr	0.21	α, β	1.3	0.0016	-
Plutonium-246 (25%)	*11 days*	*49,000*	*β*	-	*0.13*	*0.14*
Berkelium-250 (14%)	*3.2 hr*	*3.9 million*	*β*	-	*0.29*	*0.89*
Americium-246 (25%)	*39 min*	*20 million*	*β*	-	*0.66*	*0.70*
Europium-150	34 yr	70	EC	-	0.044	1.5
Europium-152	13 yr	180	β, EC	-	0.14	1.2
Europium-154	8.8 yr	270	β	-	0.29	1.2
Europium-155	5.0 yr	470	β	-	0.063	0.061
Iodine-129	16 million yr	0.00018	β	-	0.064	0.025
Iodine-131	8.0 days	130,000	β	-	0.19	0.38
Krypton-81	210,000 yr	0.021	EC	-	0.0051	0.012
Krypton-85	11 yr	400	β	-	0.25	0.0022
Neptunium-235	1.1 yr	1,400	EC	<0.001	0.010	0.0071
Neptunium-236	120,000 yr	0.013	β	-	0.21	0.14
Plutonium-236 (9%)	*2.9 yr*	*540*	*α*	*5.8*	*0.013*	*0.0021*

ATTACHMENT # 1 CALC NO.: 24590-WTP-M4C-FRP-00003
REV: A
SHEET NO.: 12

Isotope	Half-Life	Specific Activity (Ci/g)	Decay Mode	Radiation Energy (MeV)		
				Alpha (α)	Beta (β)	Gamma (γ)
Neptunium-237	2.1 million yr	0.00071	α	4.8	0.070	0.035
Protactinium-233	*27 days*	*21,000*	*β*	-	*0.20*	*0.20*
Nickel-59	75,000 yr	0.082	EC	-	0.0046	0.0024
Nickel-63	96 yr	60	β	-	0.17	-
Plutonium-238	88 yr	17	α	5.5	0.011	0.0018
Plutonium-239	24,000 yr	0.063	α	5.1	0.0067	<0.001
Plutonium-240	6,500 yr	0.23	α	5.2	0.011	0.0017
Plutonium-241	14 yr	100	β	<0.001	0.0052	<0.001
Plutonium-242	380,000 yr	0.0040	α	4.9	0.0087	0.0014
Potassium-40[n]	1.3 billion yr	0.0000071	β, EC	-	0.52	0.16
Protactinium-231[n]	33,000 yr	0.048	α	5.0	0.065	0.048
Actinium-227[n]	*22 yr*	*73*	*α, β*	*0.068*	*0.016*	*<0.001*
Thorium-227[n] (99%)	*19 days*	*31,000*	*α*	*5.9*	*0.053*	*0.11*
Francium-223[n] (1%)	*22 min*	*39 million*	*β*	-	*0.40*	*0.059*
Radium-223[n]	*11 days*	*52,000*	*α*	*5.7*	*0.076*	*0.13*
Radon-219[n]	*4.0 sec*	*13 billion*	*α*	*6.8*	*0.0063*	*0.056*
Polonium-215[n]	*0.0018 sec*	*30 trillion*	*α*	*7.4*	*<0.001*	*<0.001*
Lead-211[n]	*36 min*	*25 million*	*β*	-	*0.46*	*0.051*
Bismuth-211[n]	*2.1 min*	*420 million*	*α, β*	*6.6*	*0.010*	*0.047*
Thallium-207[n]	*4.8 min*	*190 million*	*β*	-	*0.49*	*0.0022*
Radium-226[n]	1600 yr	1.0	α	4.8	0.0036	0.0067
Radon-222[n]	*3.8 days*	*160,000*	*α*	*5.5*	*<0.001*	*<0.001*
Polonium-218[n]	*3.1 min*	*290 million*	*α*	*6.0*	*<0.001*	*<0.001*
Lead-214[n]	*27 min*	*33 million*	*β*	-	*0.29*	*0.25*
Bismuth-214[n]	*20 min*	*45 million*	*β*	-	*0.66*	*1.5*
Polonium-214[n]	*0.00016 sec*	*330 trillion*	*α*	*7.7*	*<0.001*	*<0.001*
Lead-210[n]	*22 yr*	*77*	*β*	-	*0.038*	*0.0048*
Bismuth-210[n]	*5.0 days*	*130,000*	*β*	-	*0.39*	-
Polonium-210[n]	*140 days*	*4,500*	*α*	*5.3*	*<0.001*	*<0.001*
Radium-228[n]	5.8 yr	280	β	-	0.017	<0.001
Actinium-228[n]	*6.1 hr*	*2.3 million*	*β*	-	*0.48*	*0.97*
Thorium-228[n]	*1.9 yr*	*830*	*α*	*5.4*	*0.021*	*0.0033*
Radium-224[n]	*3.7 days*	*160,000*	*α*	*5.7*	*0.0022*	*0.010*
Radon-220[n]	*56 sec*	*930 million*	*α*	*6.3*	*<0.001*	*<0.001*
Polonium-216[n]	*0.15 sec*	*350 billion*	*α*	*6.8*	*<0.001*	*<0.001*
Lead-212[n]	*11 hr*	*1.4 million*	*β*	-	*0.18*	*0.15*
Bismuth-212[n]	*61 min*	*15 million*	*α, β*	*2.2*	*0.47*	*0.19*
Polonium-212[n] (64%)	*0.00000031 sec*	*180,000 trillion*	*α*	*8.8*	-	-
Thallium-208[n] (36%)	*3.1 min*	*300 million*	*β*	-	*0.60*	*3.4*
Samarium-146	100,000,000 yr	0.000024	α	2.5	-	-
Samarium-151	90 yr	27	β	-	0.020	<0.001
Selenium-79	650,000 yr	0.070	β	-	0.056	-
Strontium-90	29 yr	140	β	-	0.20	-
Yttrium-90	*64 hr*	*550,000*	*β*	-	*0.94*	*<0.001*

ATTACHMENT # 1

CALC NO.: 2[illegible]-NTP-NMC-FRP-00003
REV: A
SHEET NO.: [illegible]

Isotope	Half-Life	Specific Activity *(Ci/g)*	Decay Mode	Radiation Energy *(MeV)*		
				Alpha *(α)*	Beta *(β)*	Gamma *(γ)*
Technetium-97	2.6 million	0.0014	EC	-	0.0056	0.011
Technetium-98	4.2 million	0.00088	β	-	0.16	1.4
Technetium-99	210,000	0.017	β	-	0.10	-
Thorium-229	14 billion yr	0.00000011	α	4.0	0.012	0.0013
Radium-225	*15 days*	*40,000*	*β*	-	*0.11*	*0.014*
Actinium-225	*10 days*	*59,000*	*α*	*5.8*	*0.022*	*0.018*
Francium-221	*4.8 min*	*180 million*	*α*	*6.3*	*0.010*	*0.031*
Astatine-217	*0.032 sec*	*1.6 trillion*	*α*	*7.1*	*<0.001*	*<0.001*
Bismuth-213	*46 min*	*20 million*	*α, β*	*0.13*	*0.44*	*0.13*
Polonium-213 (98%)	*0.0000042 sec*	*13,000 trillion*	*α*	*8.4*	-	-
Thallium-209 (2%)	*2.2 min*	*410 million*	*β*	-	*0.69*	*2.0*
Lead-209	*3.3 hr*	*4.7 million*	*β*	-	*0.20*	-
Thorium-230[n]	77,000 yr	0.020	α	4.7	0.015	0.0016
Thorium-232[n]	7,300 yr	0.22	α	4.9	0.12	0.096
Tin-121m	55 yr	54	β, IT	-	0.035	0.0049
Tin-121 (78%)	*27 hr*	*970,000*	*β*	-	*0.11*	-
Tin-126	250,000 yr	0.029	β	-	0.17	0.057
Antimony-126	*12 days*	*85,000*	*β*	-	*0.28*	*2.8*
Tritium (H-3)[n]	12 yr	9,800	β	-	0.0057	-
Uranium-232	72 hr	22	α	5.3	0.017	0.0022
Uranium-233	160,000 yr	0.0098	α	4.8	0.0061	0.0013
Uranium-234[n]	240,000 yr	0.0063	α	4.8	0.013	0.0017
Uranium-235[n]	700 million yr	0.0000022	α	4.4	0.049	0.16
Thorium-231[n]	*26 hr*	*540,000*	*β*	-	*0.17*	*0.026*
Uranium-236	23 million yr	0.000065	α	4.5	0.011	0.0016
Uranium-238[n]	4.5 billion yr	0.00000034	α	4.2	0.010	0.0014
Thorium-234[n]	*24 days*	*23,000*	*β*	-	*0.060*	*0.0093*
Protactinium-234m[n]	*1.2 min*	*690 million*	*β*	-	*0.82*	*0.012*
Zirconium-93	1.5 million yr	0.0025	β	-	0.020	-
Niobium-93m	*14 yr*	*290*	*IT*	-	*0.028*	*0.0019*

This table summarizes key radioactive properties of selected radionuclides and their associated decay products (for which information is presented in italics). Values are given to two significant figures. See the radionuclide-specific fact sheets for further information. EC = electron capture, IT = isomeric transition, Ci = curie, g = gram, and MeV = million electron volts. A dash indicates that the entry is not applicable, and an "n" indicates that the isotope exists naturally in the environment. (See the companion fact sheet on *Radioactive Properties, Internal Distribution, and Risk Coefficients* for an explanation of terms and interpretation of radiation energies.)

1 ← Atomic number H 1.008 ← Atomic mass

Period	Group* I/1	II/2	3	4	5	6	7	8	9	10	11	12	III/13	IV/14	V/15	VI/16	VII/17	VIII/18
			Transition Elements															
1	1 H 1.008																	2 He 4.003
2	3 Li 6.941	4 Be 9.012											5 B 10.81	6 C 12.01	7 N 14.01	8 O 16.00	9 F 19.00	10 Ne 20.18
3	11 Na 22.99	12 Mg 24.31											13 Al 26.98	14 Si 28.09	15 P 30.97	16 S 32.06	17 Cl 35.45	18 Ar 39.95
4	19 K 39.10	20 Ca 40.08	21 Sc 44.96	22 Ti 47.90	23 V 50.94	24 Cr 52.00	25 Mn 54.94	26 Fe 55.85	27 Co 58.93	28 Ni 58.70	29 Cu 63.55	30 Zn 65.38	31 Ga 69.72	32 Ge 72.59	33 As 74.92	34 Se 78.96	35 Br 79.90	36 Kr 83.80
5	37 Rb 85.47	38 Sr 87.62	39 Y 88.91	40 Zr 91.22	41 Nb 92.91	42 Mo 95.94	43 Tc (98)	44 Ru 101.1	45 Rh 102.9	46 Pd 106.4	47 Ag 107.9	48 Cd 112.4	49 In 114.8	50 Sn 118.7	51 Sb 121.8	52 Te 127.6	53 I 126.9	54 Xe 131.3
6	55 Cs 132.9	56 Ba 137.3	57 La 138.9	72 Hf 178.5	73 Ta 180.9	74 W 183.9	75 Re 186.2	76 Os 190.2	77 Ir 192.2	78 Pt 195.1	79 Au 197.0	80 Hg 200.6	81 Tl 204.4	82 Pb 207.2	83 Bi 209.0	84 Po (209)	85 At (210)	86 Rn (222)
7	87 Fr (223)	88 Ra (226.0)	89 Ac (227)	104	105	106	107											

Lanthanides

6	58 Ce 140.1	59 Pr 140.9	60 Nd 144.2	61 Pm (145)	62 Sm 150.4	63 Eu 152.0	64 Gd 157.3	65 Tb 158.9	66 Dy 162.5	67 Ho 164.9	68 Er 167.3	69 Tm 168.9	70 Yb 173.0	71 Lu 175.0

Actinides

7	90 Th 232.0	91 Pa (231)	92 U 238.0	93 Np (244)	94 Pu (242)	95 Am (243)	96 Cm (247)	97 Bk (247)	98 Cf (251)	99 Es (252)	100 Fm (257)	101 Md (258)	102 No (259)	103 Lr (260)

*The main groups are numbered I to VIII following accepted practice, but the distinction between A and B groups has not been made because of the confusion that has been created by the differences between European and American practice in this respect. Recently, the American Chemical Society and the International Union of Pure and Applied Chemistry recommended a revised system in which the groups are numbered consecutively from 1 to 18 as shown here. Because it may be some time before this revised numbering system becomes widely accepted we have not adopted it in the main body of the text.

Best Available Copy

ATTACHMENT #2

CALC. NO.: 24590-WTP-M4C-F02-000
REV: A
SHEET NO. 14

Appendix A Steady State Flowsheet Model Stream Reports

Table A-1 FRP14 Stream Report

Stream Number:	FRP14
Stream Name:	Waste feed from DOE to HLW Feed Receipt
Configuration:	0
	0
Run Date File:	H:\Working Folder 2 (jobs)\MRQ_03_002_run2s_Streams.csv
Run Date / Time:	3/16/2003 - 1:27:28 PM

Read this note for program instructions.

Stream Properties Variable	Value	Units
Density	1.40E+00	g/cm³
Enthalpy	-2.56E+07	BTU/hr
Mass Flow	4.95E+03	Lb/hr
	1.19E+05	Lb/day
Volumetric Flow	6.49E+00	GPM
Molar Flow	2.03E+02	Lbmol/hr
Volumetric Flow	8.67E-01	ft³/min
Molecular Weight	2.23E+01	Lb/Lbmol
Pressure	1.00E+03	mbar
Temperature	4.90E+01	C
Viscosity	1.28E+00	cP
Na Molarity	4.00E+00	mol/L
pH	1.48E+01	pH
Total TRU	3.67E-02	Ci/L
Total Activity	5.88E+00	Ci/L

Component	Aqueous Components mol/L	Lb/gal	Lb/day	Solid Components Lb/day	Total Component Lb/day	mt/day	g/sec
Total	6.23E+01	1.17E+01	1.09E+05	6.42E+03	1.18E+05	53.4772	618.9493325
Ag^{+}	4.83E-04	4.35E-04	4.07E+00	1.30E+01	1.71E+01	0.00776	0.089832154
Al^{+3}	1.00E+00	2.25E-01	2.10E+03	3.31E+02	2.43E+03	1.1068	12.81013175
As^{+3}	2.44E-03	1.53E-03	1.43E+01	3.78E+00	1.80E+01	0.0082	0.09495905
B^{+3}	2.58E-02	2.33E-03	2.18E+01	3.08E+01	5.25E+01	0.02388	0.276335636
Ba^{+2}	4.00E-04	4.58E-04	4.28E+00	1.06E+02	1.11E+02	0.05034	0.582596781
Bi^{+3}	8.09E-04	1.41E-03	1.32E+01	6.62E+01	7.94E+01	0.03609	0.417717103
$C_2O_4^{-2}$	1.03E+00	7.57E-01	7.07E+03	2.60E+02	7.33E+03	3.33339	38.58086188
Ca^{+2}	1.60E-01	5.35E-02	5.00E+02	1.68E+02	6.68E+02	0.30359	3.513731935
Cd^{+2}	1.60E-02	1.50E-02	1.40E+02	1.06E+02	2.47E+02	0.11214	1.297876868
Ce^{+3}	1.21E-03	1.41E-03	1.32E+01	1.92E+01	3.23E+01	0.0147	0.170152908
Cl^{-}	1.83E-01	5.43E-02	5.07E+02	7.79E+00	5.15E+02	0.23405	2.708954834
CO_3^{-2}	6.18E-01	3.10E-01	2.89E+03	7.10E+02	3.60E+03	1.63749	18.95241274
Cr^{+3}	8.00E-02	3.47E-02	3.24E+02	1.61E+01	3.40E+02	0.15475	1.791132325
Cu^{+2}	8.84E-04	4.69E-04	4.38E+00	1.14E+01	1.57E+01	0.00716	0.082829028
F^{-}	4.12E-01	6.54E-02	6.11E+02	8.28E+01	6.93E+02	0.3152	3.648184785
Fe^{+3}	4.00E-02	1.86E-02	1.74E+02	6.86E+02	8.61E+02	0.39122	4.528040803
H^{+}	0.00E+00	0.00E+00	0.00E+00		0.00E+00	0	0
H_2O	4.48E+01	6.74E+00	6.30E+04		6.30E+04	28.6198	331.2472451
Hg^{+2}	5.60E-05	9.37E-05	8.76E-01	2.37E+00	3.24E+00	0.00147	0.017051125
I^{-}	7.20E-01	2.35E-01	2.20E+03	3.07E+01	2.23E+03	1.0138	11.71069254
La^{+3}	3.32E-04	3.85E-04	3.60E+00	6.15E+01	6.56E+01	0.02959	0.342459619
Li^{+}	1.58E-02	9.16E-04	8.56E+00	3.33E+00	1.19E+01	0.0054	0.062555477
Mg^{+2}	7.13E-03	1.45E-03	1.35E+01	4.97E+01	6.32E+01	0.02873	0.332476705
Mn^{+2}	1.95E-02	8.93E-03	8.35E+01	1.54E+02	2.37E+02	0.10788	1.24855819
MnO_4^{-}	0.00E+00	0.00E+00	0.00E+00		0.00E+00	0	0
Na^{+}	4.00E+00	7.67E-01	7.17E+03	4.49E+02	7.62E+03	3.46375	40.08966069
NH_4^{+}	4.09E-02	6.15E-05	5.75E-01	0.00E+00	5.75E-01	0.02612	0.302335591
Ni^{+2}	1.20E-02	5.88E-03	5.49E+01	5.68E+01	1.12E+02	0.05076	0.587556647
NO_3^{-}	7.83E-01	3.01E-01	2.81E+03	1.34E+02	2.95E+03	1.33904	15.49818956
NO_2^{-}	1.65E+00	8.53E-01	7.97E+03	8.52E+02	8.82E+03	4.0109	46.42244231
O^{-2}				0.00E+00	0.00E+00	0	0
OH^{-}	6.19E+00	8.79E-01	8.21E+03	2.87E+03	1.11E+04	5.03879	58.31931105
$OH(b)^{-}$	0.00E+00	0.00E+00	0.00E+00		0.00E+00	0	0
P^{-3}				0.00E+00	0.00E+00	0	0
Pb^{+2}	2.72E-03	4.70E-03	4.39E+01	2.60E+01	7.00E+01	0.0318	0.368071122
Pd^{+2}	3.19E-05	2.83E-05	2.64E-01	3.08E+00	3.34E+00	0.00152	0.017570903
PO_4^{-3}	2.68E-01	2.12E-01	1.98E+03	2.19E+02	2.20E+03	1.00136	11.58986191
S^{-2}				0.00E+00	0.00E+00	0	0
Si^{+4}				4.49E+02	4.49E+02	0.20416	2.363018209
SiO_3^{-2}	7.06E-02	1.58E-02	1.48E+02		1.48E+02	0.06708	0.776389595
SO_4^{-2}	1.44E-01	1.16E-01	1.08E+03	3.14E+01	1.11E+03	0.50551	5.850772573
Sr^{+2}	1.93E-04	1.41E-04	1.32E+00	1.23E+01	1.36E+01	0.00619	0.071656049

Ti^{+4}	3.86E-04	1.54E-04	1.44E+00	3.07E+01	3.22E+01	0.01462	0.16923953
Zn^{+2}	1.62E-03	8.84E-04	8.26E+00	9.93E+00	1.82E+01	0.00827	0.095696111
Zr^{+4}	1.44E-03	1.09E-03	1.02E+01	3.55E+02	3.65E+02	0.16595	1.920771371

Rad. Component	Aqueous Rad. Components			Solids Rad. Components (1)			Total Rad. Components (1)		
	Ci/L	Ci/day	Lb/day	Ci/L	Ci/day	Lb/day	Ci/L	Ci/day	Lb/day
Total	2.280385293	8.07E+04	1.61E+02	3.60E+00	1.27E+05	3.29E+02	5.88E+00	2.08E+05	4.90E+02
^{241}Am	3.73834E-05	1.32E+00	8.51E-04	2.73E-02	9.66E+02	6.21E-01	2.73E-02	9.67E+02	6.22E-01
^{14}C	2.86E-05	1.01E+00	4.99E-04	1.97E-06	6.97E-02	3.44E-05	3.05E-05	1.08E+00	5.33E-04
^{60}Co	4.00E-05	1.41E+00	2.76E-06	3.03E-03	1.07E+02	2.09E-04	3.07E-03	1.09E+02	2.12E-04
^{243}Cm	7.84E-09	2.77E-04	1.21E-08	9.10E-04	3.22E+01	1.40E-03	9.10E-04	3.22E+01	1.40E-03
^{244}Cm	4.08E-08	1.44E-03	3.94E-08	6.82E-04	2.41E+01	6.57E-04	6.82E-04	2.41E+01	6.57E-04
^{137}Cs	2.16E+00	7.65E+04	1.94E+00	4.55E-01	1.61E+04	4.09E-01	2.62E+00	9.26E+04	2.35E+00
^{152}Eu	1.41E-04	4.98E+00	6.31E-05	1.46E-04	5.15E+00	6.53E-05	2.86E-04	1.01E+01	1.28E-04
^{154}Eu	4.65E-04	1.64E+01	1.34E-04	1.58E-02	5.58E+02	4.55E-03	1.62E-02	5.74E+02	4.68E-03
^{155}Eu	8.02E-04	2.84E+01	1.29E-04	8.80E-03	3.11E+02	1.41E-03	9.60E-03	3.40E+02	1.54E-03
^{3}H	3.82E-04	1.35E+01	3.10E-06	1.97E-05	6.97E-01	1.60E-07	4.02E-04	1.42E+01	3.26E-06
^{129}I	3.11E-07	1.10E-02	1.37E-01	8.80E-08	3.11E-03	3.88E-02	3.99E-07	1.41E-02	1.76E-01
^{93}Nb	2.56E-04	9.06E+00	3.52E-04	1.44E-03	5.08E+01	1.97E-03	1.69E-03	5.99E+01	2.32E-03
^{94}Nb	8.42E-08	2.98E-03	9.31E-03	2.24E-05	7.94E-01	2.48E+00	2.25E-05	7.97E-01	2.49E+00
^{238}Pu	2.22E-07	7.87E-03	1.01E-06	1.06E-04	3.75E+00	4.83E-04	1.06E-04	3.76E+00	4.84E-04
^{239}Pu	2.63E-06	9.32E-02	3.31E-03	9.40E-04	3.33E+01	1.18E+00	9.43E-04	3.34E+01	1.18E+00
^{240}Pu	4.66E-07	1.65E-02	1.60E-04	5.15E-05	1.82E+00	1.77E-02	5.20E-05	1.84E+00	1.79E-02
^{241}Pu	1.09E-05	3.87E-01	8.29E-06	6.67E-03	2.36E+02	5.05E-03	6.68E-03	2.36E+02	5.06E-03
^{125}Sb	2.15E-03	7.61E+01	1.62E-04	9.71E-03	3.43E+02	7.29E-04	1.19E-02	4.19E+02	8.91E-04
^{151}Sm	2.67E-02	9.44E+02	7.91E-02	3.03E-02	1.07E+03	8.99E-02	5.70E-02	2.02E+03	1.69E-01
^{126}Sn	1.62E-05	5.71E-01	1.11E-01	4.55E-05	1.61E+00	3.12E-01	6.16E-05	2.18E+00	4.23E-01
^{90}Sr	8.65E-02	3.06E+03	4.88E-02	3.03E+00	1.07E+05	1.71E+00	3.12E+00	1.10E+05	1.76E+00
^{99}Tc	7.68E-04	2.72E+01	3.53E+00	4.55E-03	1.61E+02	2.09E+01	5.32E-03	1.88E+02	2.45E+01
^{232}Th	5.99E-08	2.12E-03	4.25E+01	2.38E-07	8.42E-03	1.69E+02	2.98E-07	1.05E-02	2.11E+02
^{233}U	1.11E-06	3.94E-02	9.00E-03	2.73E-07	9.66E-03	2.21E-03	1.39E-06	4.90E-02	1.12E-02
^{234}U	6.47E-07	2.29E-02	8.13E-03	9.92E-07	3.51E-02	1.25E-02	1.64E-06	5.80E-02	2.06E-02
^{235}U	2.50E-08	8.84E-04	9.02E-01	7.58E-06	2.68E-03	2.74E+00	1.01E-07	3.57E-03	3.64E+00
^{236}U	7.49E-08	2.65E-03	9.03E-02	3.09E-06	1.09E-03	3.73E-02	1.06E-07	3.74E-03	1.28E-01
^{238}U	4.81E-07	1.70E-02	1.12E+02	5.58E-07	1.97E-02	1.30E+02	1.04E-06	3.68E-02	2.41E+02

Table A-2 PJV04 Stream Report

Stream Number: PJV04
Stream Name: Vapor feed to demister
Configuration: 0
0
Run Data File: H:\Working Folder 2 (john)\MRQ_03_002_run2a_Streams.csv
Run Date / Time: 1/16/2003 - 1:27:28 PM

Read this note for program instructions.

Stream Properties Variable	Value	Units
Density	1.16E-03	g/cm³
Enthalpy	-7.83E+06	BTU/hr
Mass Flow	1.52E-05	Lb/hr
	3.65E+04	Lb/day
Volumetric Flow	2.62E-05	GPM
Molar Flow	5.30E-03	Lbmol/hr
Volumetric Flow	3.50E-04	ft³/min
Molecular Weight	2.87E+01	Lb/Lbmol
Pressure	1.00E+03	mbar
Temperature	2.50E+01	C
Viscosity	1.83E-02	cP
Na Molarity	0.00E+00	mol/L
pH	#NUM!	pH
Total TRU	5.49E-11	Ci/L
Total Activity	1.03E-08	Ci/L

Gaseous Components (1) Component	mol/L	Lb/day	mt/day
CO	3.33E-28	2.94E-20	1.33623E-23
CO_2	4.96E-13	6.88E-05	3.12706E-08
H_2O	5.77E-04	3.25E+04	14.75495033
NO	2.82E-33	2.63E-25	1.2094E-28
NO_2	6.27E-39	9.08E-31	4.12854E-34
N_2	3.14E-02	2.77E+03	1260.313991
O_2	8.36E-03	8.42E+05	382.6816082
SO_2	1.28E-34	2.59E-26	1.17531E-29
NH_3	4.73E-11	2.52E-03	1.14763E-06
HNO_3	2.34E-11	4.25E-03	1.93051E-06
HCl	6.42E-32	7.37E-24	3.35218E-27
HF	0.00E+00	0.00E+00	0

(1) All radionuclides in gaseous streams are assumed to exist as solid particulate.

Component	Aqueous Components mol/L	Lb/gal	Lb/day	Solid Components Lb/day	Total Component Lb/day	mt/day	g/sec
Total	0.00E+00	0.00E+00	0.00E+00	5.93E+00	5.93E+00	0.002693339	0.031172908
Ag^{+}	0.00E+00	0.00E+00	0.00E+00	1.19E-03	1.19E-03	5.41706E-07	6.26975E-06
Al^{+3}	0.00E+00	0.00E+00	0.00E+00	2.16E-01	2.16E-01	9.81535E-05	0.001136035
As^{+3}	0.00E+00	0.00E+00	0.00E+00	4.58E-01	4.58E-01	0.000208163	0.002409293
B^{+3}	0.00E+00	0.00E+00	0.00E+00	7.10E-03	7.10E-03	3.22915E-06	3.73744E-05
Ba^{+2}	0.00E+00	0.00E+00	0.00E+00	6.86E-03	6.86E-03	3.11714E-06	3.6078E-05
Bi^{+3}	0.00E+00	0.00E+00	0.00E+00	5.24E-03	5.24E-03	2.38405E-06	2.75911E-05
$C_2O_4^{-2}$	0.00E+00	0.00E+00	0.00E+00	6.28E-01	6.28E-01	0.000285668	0.003306338
Ca^{+2}	0.00E+00	0.00E+00	0.00E+00	5.79E-02	5.79E-02	2.63037E-05	0.000304441
Cd^{+2}	0.00E+00	0.00E+00	0.00E+00	2.04E-02	2.04E-02	9.36407E-06	0.00010838
Ce^{+3}	0.00E+00	0.00E+00	0.00E+00	4.78E-03	4.78E-03	2.17395E-06	2.51615E-05
Cl^{-}	0.00E+00	0.00E+00	0.00E+00	5.13E-02	5.13E-02	2.33256E-05	0.000269973
CO_3^{-2}	0.00E+00	0.00E+00	0.00E+00	3.11E-01	3.11E-01	0.000141261	0.001634962
Cr^{+3}	0.00E+00	0.00E+00	0.00E+00	3.12E-02	3.12E-02	1.41838E-05	0.000164165
Cu^{+2}	0.00E+00	0.00E+00	0.00E+00	1.09E-03	1.09E-03	4.96373E-07	5.74505E-06
F^{-}	0.00E+00	0.00E+00	0.00E+00	6.82E-02	6.82E-02	3.10211E-05	0.00035904
Fe^{+3}	0.00E+00	0.00E+00	0.00E+00	5.82E-02	5.82E-02	2.64561E-05	0.000306205
H^{+}	0.00E+00	0.00E+00	0.00E+00		0.00E+00	0	0
H_2O	0.00E+00	0.00E+00	0.00E+00		0.00E+00	0	0
Hg^{+2}	0.00E+00	0.00E+00	0.00E+00	3.68E-03	3.68E-03	1.66521E-06	1.92733E-05
K^{+}	0.00E+00	0.00E+00	0.00E+00	2.09E-01	2.09E-01	9.48457E-05	0.001097751
La^{+3}	0.00E+00	0.00E+00	0.00E+00	4.11E-03	4.11E-03	1.86866E-06	2.1628E-05
Li^{+}	0.00E+00	0.00E+00	0.00E+00	1.48E-03	1.48E-03	6.72836E-07	7.78744E-06
Mg^{+2}	0.00E+00	0.00E+00	0.00E+00	4.40E-03	4.40E-03	2.00192E-06	2.31703E-05
Mn^{+2}	0.00E+00	0.00E+00	0.00E+00	1.71E-02	1.71E-02	7.78859E-06	9.01457E-05
MnO_4^{-}	0.00E+00	0.00E+00	0.00E+00		0.00E+00	0	0
Na^{+}	0.00E+00	0.00E+00	0.00E+00	7.42E-01	7.42E-01	0.000337109	0.003901728
NH_4^{+}	0.00E+00	0.00E+00	0.00E+00	0.00E+00	0.00E+00	0	0
Ni^{+2}	0.00E+00	0.00E+00	0.00E+00	8.59E-03	8.59E-03	3.90617E-06	4.52103E-05
NO_2^{-}	0.00E+00	0.00E+00	0.00E+00	2.69E-01	2.69E-01	0.000122125	0.001413484
NO_3^{-}	0.00E+00	0.00E+00	0.00E+00	1.41E+00	1.41E+00	0.000641309	0.007422562
O^{-2}				1.63E-01	1.63E-01	7.39167E-05	0.000855517
OH^{-}	0.00E+00	0.00E+00	0.00E+00	7.98E-01	7.98E-01	0.000362651	0.004197349
$OH(s)$	0.00E+00	0.00E+00	0.00E+00		0.00E+00	0	0
P^{+5}				5.39E-10	5.39E-10	2.44948E-13	2.83505E-12
Pb^{+2}	0.00E+00	0.00E+00	0.00E+00	5.65E-03	5.65E-03	2.56841E-06	2.97269E-05
Pd^{+2}	0.00E+00	0.00E+00	0.00E+00	2.10E-04	2.10E-04	9.55297E-08	1.10567E-06
PO_4^{-3}	0.00E+00	0.00E+00	0.00E+00	1.97E-01	1.97E-01	8.95391E-05	0.001036332
S^{-2}				1.63E-09	1.63E-09	7.41195E-13	8.57864E-12
Sr^{+2}				3.33E-02	3.33E-02	1.51193E-05	0.000174991
$S_2O_4^{-2}$	0.00E+00	0.00E+00	0.00E+00		0.00E+00	0	0
SO_4^{-2}	0.00E+00	0.00E+00	0.00E+00	1.02E-01	1.02E-01	4.63887E-05	0.000536906
Sr^{+2}	0.00E+00	0.00E+00	0.00E+00	8.69E-04	8.69E-04	3.95191E-07	4.57397E-06
Y^{+3}	0.00E+00	0.00E+00	0.00E+00	5.27E-03	5.27E-03	2.39325E-06	2.76996E-05
Zn^{+2}	0.00E+00	0.00E+00	0.00E+00	2.03E-03	2.03E-03	9.21311E-07	1.06633E-05

CALCULATION SHEET

BY: E. Berrios
DATE: 05/13/03

PROJECT: WTP
JOB NO.: 24590
CALC NO.: 24590-WTP-M4C-FRP-00003
SHEET REV: A
SHEET NO.: 19

SUBJECT: Integrated Baseline Emissions Report Non-SSFM Represented Constituents Emissions Rate Estimation

Sr^{+2}	0.00E+00	0.00E+00	0.00E+00	2.25E-02	2.25E-02	1.02167E-05	0.000185249

Rad. Component	Aqueous Rad. Components			Solids Rad. Components (3)			Templ Rad. Components (1)		
	Ci/L	Ci/day	Lb/day	Ci/L	Ci/day	Lb/day	Ci/L	Ci/day	Lb/day
Total	0.00E+00	0.00E+00	0.00E+00	1.03E-08	1.47E-01	3.56E-02	1.03E-08	1.47E-01	3.56E-02
^{37}Ar	0	0.00E+00	0.00E+00	4.09E-11	5.84E-02	3.76E-05	4.09E-11	5.84E-02	3.76E-05
^{14}C	0.00E+00	0.00E+00	0.00E+00	6.85E-14	9.78E-05	4.83E-08	6.85E-14	9.78E-05	4.83E-08
^{46}Ca	0.00E+00	0.00E+00	0.00E+00	4.62E-12	6.60E-03	1.29E-08	4.62E-12	6.60E-03	1.29E-08
^{113}Cm	0.00E+00	0.00E+00	0.00E+00	1.36E-12	1.94E-03	8.47E-08	1.36E-12	1.94E-03	8.47E-08
^{114}Cm	0.00E+00	0.00E+00	0.00E+00	1.02E-12	1.46E-03	3.97E-08	1.02E-12	1.46E-03	3.97E-08
^{51}Cr	0.00E+00	0.00E+00	0.00E+00	5.31E-09	7.58E-00	1.93E-04	5.31E-09	7.58E-00	1.93E-04
^{60}Co	0.00E+00	0.00E+00	0.00E+00	5.40E-13	7.73E-04	9.80E-09	5.40E-13	7.73E-04	9.80E-09
^{60}Co	0.00E+00	0.00E+00	0.00E+00	2.46E-11	3.52E-02	2.87E-07	2.46E-11	3.52E-02	2.87E-07
^{63}Cu	0.00E+00	0.00E+00	0.00E+00	1.50E-11	2.14E-02	9.72E-08	1.50E-11	2.14E-02	9.72E-08
^{3}H	0.00E+00	0.00E+00	0.00E+00	5.76E-13	8.23E-04	1.89E-10	5.76E-13	8.23E-04	1.89E-10
^{55}Fe	0.00E+00	0.00E+00	0.00E+00	9.05E-16	1.29E-06	1.63E-05	9.05E-16	1.29E-06	1.63E-05
^{59}Ni	0.00E+00	0.00E+00	0.00E+00	2.75E-12	3.93E-03	1.53E-07	2.75E-12	3.93E-03	1.53E-07
^{63}Ni	0.00E+00	0.00E+00	0.00E+00	3.37E-14	4.82E-05	1.51E-04	3.37E-14	4.82E-05	1.51E-04
^{237}Np	0.00E+00	0.00E+00	0.00E+00	1.59E-13	2.27E-04	2.93E-08	1.59E-13	2.27E-04	2.93E-08
^{238}Pu	0.00E+00	0.00E+00	0.00E+00	1.41E-12	2.02E-03	7.16E-05	1.41E-12	2.02E-03	7.16E-05
^{239}Pu	0.00E+00	0.00E+00	0.00E+00	7.83E-14	1.12E-04	1.08E-06	7.83E-14	1.12E-04	1.08E-06
^{240}Pu	0.00E+00	0.00E+00	0.00E+00	1.00E-11	1.43E-02	3.04E-07	1.00E-11	1.43E-02	3.04E-07
^{125}Sb	0.00E+00	0.00E+00	0.00E+00	1.95E-11	2.79E-02	5.93E-08	1.95E-11	2.79E-02	5.93E-08
^{151}Sm	0.00E+00	0.00E+00	0.00E+00	1.07E-10	1.52E-01	1.28E-05	1.07E-10	1.52E-01	1.28E-05
^{126}Sn	0.00E+00	0.00E+00	0.00E+00	1.05E-13	1.50E-04	2.92E-05	1.05E-13	1.50E-04	2.92E-05
^{90}Sr	0.00E+00	0.00E+00	0.00E+00	4.76E-09	6.80E+00	1.08E-04	4.76E-09	6.80E+00	1.08E-04
^{99}Tc	0.00E+00	0.00E+00	0.00E+00	1.29E-11	1.85E-02	2.40E-03	1.29E-11	1.85E-02	2.40E-03
^{232}Th	0.00E+00	0.00E+00	0.00E+00	4.93E-16	7.05E-07	1.41E-02	4.93E-16	7.05E-07	1.41E-02
^{233}U	0.00E+00	0.00E+00	0.00E+00	2.96E-15	4.23E-06	9.69E-07	2.96E-15	4.23E-06	9.69E-07
^{234}U	0.00E+00	0.00E+00	0.00E+00	2.97E-15	4.24E-06	1.51E-06	2.97E-15	4.24E-06	1.51E-06
^{235}U	0.00E+00	0.00E+00	0.00E+00	1.71E-16	2.44E-07	2.49E-04	1.71E-16	2.44E-07	2.49E-04
^{236}U	0.00E+00	0.00E+00	0.00E+00	2.18E-16	3.12E-07	1.04E-05	2.18E-16	3.12E-07	1.04E-05
^{238}U	0.00E+00	0.00E+00	0.00E+00	1.94E-15	2.77E-06	1.82E-02	1.94E-15	2.77E-06	1.82E-02

Table A-3 FEP06 Stream Report

Stream Number:	FEP06
Stream Name:	Evaporator overheads with Air
Configuration:	0
	0
Run Date File:	H:\Working Folder 2 (jake)\MAQ_03_002_run2a_Streams.csv
Run Date / Time:	1/16/2003 - 1:27:25 PM

Read this note
for program instructions

Stream Properties		
Variable	Value	Units
Density	5.98E-06	g/cm³
Enthalpy	-8.92E+07	BTU/hr
Mass Flow	1.57E+04	Lb/hr
	3.77E+05	Lb/day
Volumetric Flow	5.23E+05	GPM
Molar Flow	8.64E+02	Lbmol/hr
Volumetric Flow	6.99E+04	ft³/min
Molecular Weight	1.81E+01	Lb/Lbmol
Pressure	8.97E+01	mbar
Temperature	5.41E+01	C
Viscosity	1.09E-02	cP
Na Molarity	0.00E+00	mol/L
pH	#NUM!	pH
Total TRU	2.02E-11	Ci/L
Total Activity	7.79E-09	Ci/L

Aqueous Components (1)			
Component	mol/L	Lb/day	mt/day
CO	8.41E-24	1.48E-15	6.73298E-19
CO_2	8.51E-09	1.83E-00	0.000695604
H_2O	1.28E-03	3.72E-05	169.0691872
NO	9.42E-27	1.78E-18	8.08288E-22
NO_2	7.15E-36	2.06E-27	9.35398E-31
N_2	1.18E-05	2.08E-03	0.947181242
O_2	3.24E-06	6.52E-02	0.296196622
SO_2	8.54E-29	2.23E-20	1.01427E-23
NH_3	9.04E-07	9.68E-01	0.043993344
HNO_3	1.81E-38	7.79E-10	3.26717E-13
HCl	2.54E-28	5.88E-20	2.67295E-23
HF	8.49E-29	1.07E-20	4.85366E-24

(1) All radionuclides in gaseous streams are assumed to exist as solid particulate.

Component	Aqueous Components mol/L	Lb/gal	Lb/day	Solid Components Lb/day	Total Component Lb/day	mt/day	g/sec
Total	0.00E+00	0.00E+00	0.00E+00	8.34E+02	8.34E+02	0.37899515	4.38651793 6
Ag^+	0.00E+00	0.00E+00	0.00E+00	1.97E-02	1.97E-02	8.97617E-06	0.000103891
Al^{+3}	0.00E+00	0.00E+00	0.00E+00	2.43E+00	2.43E+00	0.001102285	0.012757929
As^{+3}	0.00E+00	0.00E+00	0.00E+00	6.01E+00	6.01E+00	0.002730423	0.03160211 6
B^{+3}	0.00E+00	0.00E+00	0.00E+00	7.69E-02	7.69E-02	3.4977E-05	0.000404827
Ba^{+2}	0.00E+00	0.00E+00	0.00E+00	1.13E-01	1.13E-01	5.14709E-05	0.000595728
Bi^{+3}	0.00E+00	0.00E+00	0.00E+00	2.20E-02	2.20E-02	9.98732E-06	0.000115594
$C_2O_4^{-2}$	0.00E+00	0.00E+00	0.00E+00	7.49E+02	7.49E+02	0.340674345	3.942990305
Ca^{+2}	0.00E+00	0.00E+00	0.00E+00	9.67E-01	9.67E-01	0.000439474	0.005086509
Cd^{+2}	0.00E+00	0.00E+00	0.00E+00	1.55E-02	1.55E-02	7.05508E-06	8.1656E-05
Ce^{+3}	0.00E+00	0.00E+00	0.00E+00	7.67E-02	7.67E-02	3.48734E-05	0.000403628
Cl^-	0.00E+00	0.00E+00	0.00E+00	1.58E+00	1.58E+00	0.000720269	0.008336447
CO_3^{-2}	0.00E+00	0.00E+00	0.00E+00	5.26E+00	5.26E+00	0.002392936	0.027699014
Cr^{+3}	0.00E+00	0.00E+00	0.00E+00	1.51E-02	1.51E-02	6.85774E-06	7.9372E-05
Cu^{+2}	0.00E+00	0.00E+00	0.00E+00	1.82E-02	1.82E-02	8.28032E-06	9.5837E-05
F^-	0.00E+00	0.00E+00	0.00E+00	4.54E-02	4.54E-02	2.0652E-05	0.000239028
Fe^{+3}	0.00E+00	0.00E+00	0.00E+00	9.61E-01	9.61E-01	0.000437023	0.005058339
H^+	0.00E+00	0.00E+00	0.00E+00		0.00E+00	0	0
H_2O	0.00E+00	0.00E+00	0.00E+00		0.00E+00	0	0
Hg^{+2}	0.00E+00	0.00E+00	0.00E+00	5.13E-02	5.13E-02	2.33309E-05	0.000269802
K^+	0.00E+00	0.00E+00	0.00E+00	1.00E+00	1.00E+00	0.000455222	0.005268776
La^{+3}	0.00E+00	0.00E+00	0.00E+00	6.78E-02	6.78E-02	3.08247E-05	0.000356748
Li^+	0.00E+00	0.00E+00	0.00E+00	5.96E-04	5.96E-04	2.70715E-07	3.13327E-06
Mg^{+2}	0.00E+00	0.00E+00	0.00E+00	7.08E-02	7.08E-02	3.21618E-05	0.000372243
Mn^{+2}	0.00E+00	0.00E+00	0.00E+00	2.86E-01	2.86E-01	0.000130035	0.001505032
MnO_4^-	0.00E+00	0.00E+00	0.00E+00		0.00E+00	0	0
Na^+	0.00E+00	0.00E+00	0.00E+00	4.17E-01	4.17E-01	0.00018967	0.002195254
NH_4^+	0.00E+00	0.00E+00	0.00E+00	0.00E+00	0.00E+00	0	0
Ni^{+2}	0.00E+00	0.00E+00	0.00E+00	4.93E-03	4.93E-03	2.24105E-06	2.5938E-05
NO_2^-	0.00E+00	0.00E+00	0.00E+00	1.90E+00	1.90E+00	0.000862321	0.009980562
NO_3^-	0.00E+00	0.00E+00	0.00E+00	4.17E+01	4.17E+01	0.018950838	0.219339408
O^{-2}				2.15E+00	2.15E+00	0.000976222	0.011298869
OH^-	0.00E+00	0.00E+00	0.00E+00	1.35E+01	1.35E+01	0.006134076	0.070997409
$OH^-(s)$	0.00E+00	0.00E+00	0.00E+00		0.00E+00	0	0
P^{+3}				2.88E-09	2.88E-09	1.30952E-12	1.51565E-11
Pb^{+2}	0.00E+00	0.00E+00	0.00E+00	2.40E-02	2.40E-02	1.09257E-05	0.000126458
Pd^{+2}	0.00E+00	0.00E+00	0.00E+00	1.19E-04	1.19E-04	5.41759E-08	6.26341E-07
PO_4^{-3}	0.00E+00	0.00E+00	0.00E+00	3.34E+00	3.34E+00	0.001520042	0.017593075
S^{-2}				2.69E-08	2.69E-08	1.22381E-11	1.41645E-10
S^{+2}				5.24E-01	5.24E-01	0.000238077	0.002755519
SiO_3^{-2}	0.00E+00	0.00E+00	0.00E+00		0.00E+00	0	0
SO_4^{-2}	0.00E+00	0.00E+00	0.00E+00	1.23E+00	1.23E+00	0.000560821	0.006490988
Sr^{+2}	0.00E+00	0.00E+00	0.00E+00	6.26E-05	6.26E-05	2.84615E-08	3.29415E-07
Ti^{+4}	0.00E+00	0.00E+00	0.00E+00	4.23E-02	4.23E-02	1.92094E-05	0.000222331
Zn^{+2}	0.00E+00	0.00E+00	0.00E+00	2.47E-02	2.47E-02	1.12219E-05	0.000129884

Zr^{+4}	0.00E+00	0.00E+00	0.00E+00	3.69E-01	3.69E-01	0.000167592	0.001939717

Rad. Component	Aqueous Rad. Components			Solids Rad. Components (1)			Total Rad. Components (1)		
	Ci/L	Ci/day	Lb/day	Ci/L	Ci/day	Lb/day	Ci/L	Ci/day	Lb/day
Total	0.00E+00	0.00E+00	0.00E+00	7.75E-09	2.21E+01	5.86E-01	7.75E-09	2.21E+01	5.86E-01
^{241}Am	0	0.00E+00	0.00E+00	2.42E-13	6.90E-04	4.44E-07	2.42E-13	6.90E-04	4.44E-07
^{14}C	0.00E+00	0.00E+00	0.00E+00	5.83E-13	1.66E-03	8.20E-07	5.83E-13	1.66E-03	8.20E-07
^{60}Co	0.00E+00	0.00E+00	0.00E+00	3.82E-11	1.09E-01	2.12E-07	3.82E-11	1.09E-01	2.12E-07
^{243}Cm	0.00E+00	0.00E+00	0.00E+00	1.12E-11	3.20E-02	1.40E-06	1.12E-11	3.20E-02	1.40E-06
^{244}Cm	0.00E+00	0.00E+00	0.00E+00	8.42E-12	2.40E-02	6.54E-07	8.42E-12	2.40E-02	6.54E-07
^{137}Cs	0.00E+00	0.00E+00	0.00E+00	5.28E-13	1.51E-03	3.82E-08	5.28E-13	1.51E-03	3.82E-08
^{152}Eu	0.00E+00	0.00E+00	0.00E+00	3.26E-15	9.29E-06	1.18E-10	3.26E-15	9.29E-06	1.18E-10
^{154}Eu	0.00E+00	0.00E+00	0.00E+00	1.46E-13	4.16E-04	3.40E-09	1.46E-13	4.16E-04	3.40E-09
^{155}Eu	0.00E+00	0.00E+00	0.00E+00	8.90E-14	2.54E-04	1.15E-09	8.90E-14	2.54E-04	1.15E-09
^{3}H	0.00E+00	0.00E+00	0.00E+00	7.37E-09	2.10E+01	4.83E-06	7.37E-09	2.10E+01	4.83E-06
^{129}I	0.00E+00	0.00E+00	0.00E+00	1.73E-14	4.94E-05	6.16E-04	1.73E-14	4.94E-05	6.16E-04
^{63}Ni	0.00E+00	0.00E+00	0.00E+00	7.82E-13	2.23E-03	8.66E-08	7.82E-13	2.23E-03	8.66E-08
^{237}Np	0.00E+00	0.00E+00	0.00E+00	2.79E-13	7.95E-04	2.49E-03	2.79E-13	7.95E-04	2.49E-03
^{238}Pu	0.00E+00	0.00E+00	0.00E+00	3.55E-16	1.01E-06	1.30E-10	3.55E-16	1.01E-06	1.30E-10
^{239}Pu	0.00E+00	0.00E+00	0.00E+00	3.15E-15	8.98E-06	3.19E-07	3.15E-15	8.98E-06	3.19E-07
^{240}Pu	0.00E+00	0.00E+00	0.00E+00	1.74E-16	4.97E-07	4.82E-09	1.74E-16	4.97E-07	4.82E-09
^{241}Pu	0.00E+00	0.00E+00	0.00E+00	2.23E-14	6.36E-05	1.36E-09	2.23E-14	6.36E-05	1.36E-09
^{125}Sb	0.00E+00	0.00E+00	0.00E+00	4.10E-11	1.17E-01	2.49E-07	4.10E-11	1.17E-01	2.49E-07
^{151}Sm	0.00E+00	0.00E+00	0.00E+00	2.42E-13	6.91E-04	5.78E-08	2.42E-13	6.91E-04	5.78E-08
^{126}Sn	0.00E+00	0.00E+00	0.00E+00	2.22E-13	6.32E-04	1.23E-04	2.22E-13	6.32E-04	1.23E-04
^{90}Sr	0.00E+00	0.00E+00	0.00E+00	1.71E-10	4.88E-01	7.79E-06	1.71E-10	4.88E-01	7.79E-06
^{99}Tc	0.00E+00	0.00E+00	0.00E+00	1.03E-10	2.95E-01	3.83E-02	1.03E-10	2.95E-01	3.83E-02
^{232}Th	0.00E+00	0.00E+00	0.00E+00	4.11E-15	1.17E-05	2.35E-01	4.11E-15	1.17E-05	2.35E-01
^{233}U	0.00E+00	0.00E+00	0.00E+00	2.51E-14	7.17E-05	1.64E-05	2.51E-14	7.17E-05	1.64E-05
^{234}U	0.00E+00	0.00E+00	0.00E+00	2.49E-14	7.10E-05	2.52E-05	2.49E-14	7.10E-05	2.52E-05
^{235}U	0.00E+00	0.00E+00	0.00E+00	1.42E-15	4.06E-06	4.15E-03	1.42E-15	4.06E-06	4.15E-03
^{236}U	0.00E+00	0.00E+00	0.00E+00	1.85E-15	5.26E-06	1.79E-04	1.85E-15	5.26E-06	1.79E-04
^{238}U	0.00E+00	0.00E+00	0.00E+00	1.63E-14	4.65E-05	3.05E-01	1.63E-14	4.65E-05	3.05E-01

BY: E. Bertke
DATE: 03/13/03

CALCULATION SHEET

PROJECT: WTP
JOB NO.: 24590
CALC NO.: 24590-WTP-M4C-FRP-00003
SHEET REV. A
SHEET NO.: 22

SUBJECT: Integrated Baseline Emissions Report Non-SSFM Represented Constituents Emissions Rate Estimation

Table A-4 PVP01 Stream Report

Stream Number: PVP01
Stream Name: Pretreatment vessel vents feed to caustic scrubber
Configuration: 0
0
Run Data File: H:\Working Folder Z (John)\MRQ_03_002_run2a_Streams.csv
Run Date / Time: 1/16/2003 - 1:27:28 PM

Read this note for program instructions

Stream Properties Variable	Value	Units
Density	1.13E-03	g/cm³
Enthalpy	-1.63E+06	BTU/hr
Mass Flow	1.11E+04	Lb/hr
	2.70E+05	Lb/day
Volumetric Flow	1.98E+04	gPM
Molar Flow	3.55E+02	Lbmol/hr
Volumetric Flow	2.65E+03	ft³/min
Molecular Weight	7.84E+01	Lb/Lbmol
Pressure	1.00E+03	mbar
Temperature	2.87E+01	C
Viscosity	1.84E-02	cP
Net Molarity	0.00E+00	mol/L
pH	#N/A(#)	pH
Total TRU	4.51E-11	Ci/L
Total Activity	1.36E-08	Ci/L

Gaseous Components (1) Component	mol/L	Lb/day	Mt/day
CO	2.30E-27	1.53E-20	6.97408E-24
CO_2	2.39E-07	2.50E-06	0.001137715
H_2O	1.59E-03	6.82E+03	3.098869253
NO	8.64E-31	6.01E-24	2.74254E-27
NO_2	5.20E-40	5.69E-33	2.58847E-36
N_2	3.00E-02	2.02E+05	91.74652304
O_2	8.04E-03	6.13E+04	27.84468279
SO_2	1.17E-27	1.79E-20	8.118026E-24
NH_3	8.08E-06	3.28E-01	0.014894544
HNO_3	1.67E-09	2.51E-02	1.139559E-05
HCl	6.77E-33	5.88E-26	2.672398E-29
HF	1.03E-32	4.93E-26	2.24117E-29

(1): All radionuclides in gaseous streams are assumed to exist as solid particulate.

Component	Aqueous Components mol/L	Lb/gal	Lb/day	Solid Components Lb/day	Total Component Lb/day	mt/day	g/sec
Total	0.00E+00	0.00E+00	0.00E+00	7.66E-01	7.66E-01	0.000348363	0.00403196
Ag^+	0.00E+00	0.00E+00	0.00E+00	1.30E-04	1.30E-04	5.89439E-08	6.82222E-07
Al^{+3}	0.00E+00	0.00E+00	0.00E+00	2.68E-02	2.68E-02	1.21808E-05	0.000140981
As^{+3}	0.00E+00	0.00E+00	0.00E+00	3.47E-02	3.47E-02	1.57936E-05	0.000182797
B^{+3}	0.00E+00	0.00E+00	0.00E+00	9.70E-04	9.70E-04	4.40965E-07	5.10376E-06
Ba^{+2}	0.00E+00	0.00E+00	0.00E+00	6.52E-04	6.52E-04	2.96158E-07	3.42775E-06
Br^{-1}	0.00E+00	0.00E+00	0.00E+00	3.59E-04	3.59E-04	1.63135E-07	1.88814E-06
$C_2O_4^{-2}$	0.00E+00	0.00E+00	0.00E+00	6.57E-02	6.57E-02	2.98632E-05	0.000345638
Ca^{+2}	0.00E+00	0.00E+00	0.00E+00	9.17E-02	9.17E-02	4.16651E-05	0.000482235
Cd^{+2}	0.00E+00	0.00E+00	0.00E+00	1.80E-03	1.80E-03	8.1831E-07	9.47188E-06
Ce^{+3}	0.00E+00	0.00E+00	0.00E+00	5.76E-04	5.76E-04	2.62027E-07	3.03272E-06
Cl^-	0.00E+00	0.00E+00	0.00E+00	5.78E-03	5.78E-03	2.62906E-06	3.0429E-05
CO_3^{-2}	0.00E+00	0.00E+00	0.00E+00	5.51E-02	5.51E-02	2.50383E-05	0.000289795
Cr^{+3}	0.00E+00	0.00E+00	0.00E+00	3.14E-03	3.14E-03	1.42588E-06	1.65032E-05
Cu^{+2}	0.00E+00	0.00E+00	0.00E+00	1.23E-04	1.23E-04	5.58431E-08	6.46332E-07
F^-	0.00E+00	0.00E+00	0.00E+00	6.69E-03	6.69E-03	3.03911E-06	3.51749E-05
Fe^{+3}	0.00E+00	0.00E+00	0.00E+00	6.39E-03	6.39E-03	2.90402E-06	3.36114E-05
H^+	0.00E+00	0.00E+00	0.00E+00		0.00E+00	0	0
H_2O	0.00E+00	0.00E+00	0.00E+00		0.00E+00	0	0
Hg^{+2}	0.00E+00	0.00E+00	0.00E+00	2.66E-04	2.66E-04	1.20762E-07	1.3977E-06
K^+	0.00E+00	0.00E+00	0.00E+00	2.36E-02	2.36E-02	1.07485E-05	0.000124403
La^{+3}	0.00E+00	0.00E+00	0.00E+00	3.63E-04	3.63E-04	1.649E-07	1.90857E-06
Li^+	0.00E+00	0.00E+00	0.00E+00	1.39E-04	1.39E-04	6.33846E-08	7.3362E-07
Mg^{+2}	0.00E+00	0.00E+00	0.00E+00	3.48E-03	3.48E-03	1.58285E-06	1.83203E-05
Mn^{+2}	0.00E+00	0.00E+00	0.00E+00	1.93E-03	1.93E-03	8.76458E-07	1.01442E-05
MnO_4^-	0.00E+00	0.00E+00	0.00E+00		0.00E+00	0	0
Na^+	0.00E+00	0.00E+00	0.00E+00	9.23E-02	9.23E-02	4.1963E-05	0.000485683
NH_4^+	0.00E+00	0.00E+00	0.00E+00	0.00E+00	0.00E+00	0	0
Ni^{+2}	0.00E+00	0.00E+00	0.00E+00	7.33E-04	7.33E-04	3.33371E-07	3.85847E-06
NO_2^-	0.00E+00	0.00E+00	0.00E+00	2.73E-02	2.73E-02	1.24025E-05	0.000143547
NO_3^-	0.00E+00	0.00E+00	0.00E+00	1.45E-01	1.45E-01	6.59558E-05	0.000763377
O^{-2}				1.40E-02	1.40E-02	6.35493E-06	7.35525E-05
OH^-	0.00E+00	0.00E+00	0.00E+00	1.09E-01	1.09E-01	4.96737E-05	0.000574927
$Ca(OH)_2$	0.00E+00	0.00E+00	0.00E+00		0.00E+00	0	0
P^{+5}				1.22E-08	1.22E-08	5.53418E-12	6.4053E-11
Pb^{+2}	0.00E+00	0.00E+00	0.00E+00	5.08E-04	5.08E-04	2.30846E-07	2.67183E-06
Pd^{+2}	0.00E+00	0.00E+00	0.00E+00	1.35E-05	1.35E-05	6.13278E-09	7.09812E-08
PO_4^{-3}	0.00E+00	0.00E+00	0.00E+00	2.74E-02	2.74E-02	1.24418E-05	0.000144003
S^{-2}				2.72E-05	2.72E-05	1.23772E-08	1.43255E-07
Si^{+4}				4.97E-03	4.97E-03	2.25979E-06	2.61549E-05
SiO_3^{-2}	0.00E+00	0.00E+00	0.00E+00		0.00E+00	0	0
SO_4^{-2}	0.00E+00	0.00E+00	0.00E+00	1.12E-02	1.12E-02	5.07967E-06	5.87925E-05
Sr^{+2}	0.00E+00	0.00E+00	0.00E+00	5.58E-05	5.58E-05	2.53735E-08	2.9368E-07
Ti^{+4}	0.00E+00	0.00E+00	0.00E+00	7.59E-04	7.59E-04	3.44809E-07	3.99085E-06

Zr^{+2}	0.00E+00	0.00E+00	0.00E+00	2.67E-04	2.67E-04	1.21481E-07	1.40603E-06
Zr^{+4}	0.00E+00	0.00E+00	0.00E+00	2.13E-03	2.13E-03	9.66247E-07	1.11834E-05

Rad. Component	Aqueous Rad. Components			Solids Rad. Components (1)			Total Rad. Components (1)		
	Ci/L	Ci/day	Lb/day	Ci/L	Ci/day	Lb/day	Ci/L	Ci/day	Lb/day
Total	0.00E+00	0.00E+00	0.00E+00	1.26E-08	1.36E+00	3.82E-03	1.26E-08	1.36E+00	3.82E-03
^{241}Am	0	0.00E+00	0.00E+00	3.15E-11	3.40E-03	2.19E-06	3.15E-11	3.40E-03	2.19E-06
^{14}C	0.00E+00	0.00E+00	0.00E+00	1.39E-13	1.50E-05	7.42E-09	1.39E-13	1.50E-05	7.42E-09
^{60}Co	0.00E+00	0.00E+00	0.00E+00	5.19E-12	5.61E-04	1.09E-09	5.19E-12	5.61E-04	1.09E-09
^{243}Cm	0.00E+00	0.00E+00	0.00E+00	1.50E-12	1.62E-04	7.07E-09	1.50E-12	1.62E-04	7.07E-09
^{244}Cm	0.00E+00	0.00E+00	0.00E+00	1.13E-12	1.22E-04	3.31E-09	1.13E-12	1.22E-04	3.31E-09
^{137}Cs	0.00E+00	0.00E+00	0.00E+00	5.55E-09	6.00E-01	1.52E-05	5.55E-09	6.00E-01	1.52E-05
^{152}Eu	0.00E+00	0.00E+00	0.00E+00	6.03E-13	6.51E-05	8.26E-10	6.03E-13	6.51E-05	8.26E-10
^{154}Eu	0.00E+00	0.00E+00	0.00E+00	1.95E-11	2.11E-03	1.72E-08	1.95E-11	2.11E-03	1.72E-08
^{155}Eu	0.00E+00	0.00E+00	0.00E+00	1.26E-11	1.36E-03	6.17E-09	1.26E-11	1.36E-03	6.17E-09
^{3}H	0.00E+00	0.00E+00	0.00E+00	3.04E-09	3.28E-01	7.53E-08	3.04E-09	3.28E-01	7.53E-08
^{129}I	0.00E+00	0.00E+00	0.00E+00	2.01E-15	2.17E-07	2.71E-06	2.01E-15	2.17E-07	2.71E-06
^{63}Ni	0.00E+00	0.00E+00	0.00E+00	2.49E-12	2.69E-04	1.04E-08	2.49E-12	2.69E-04	1.04E-08
^{93}Nb	0.00E+00	0.00E+00	0.00E+00	3.74E-14	4.04E-06	1.26E-05	3.74E-14	4.04E-06	1.26E-05
^{238}Pu	0.00E+00	0.00E+00	0.00E+00	1.23E-13	1.32E-05	1.70E-09	1.23E-13	1.32E-05	1.70E-09
^{239}Pu	0.00E+00	0.00E+00	0.00E+00	1.09E-12	1.18E-04	4.17E-06	1.09E-12	1.18E-04	4.17E-06
^{240}Pu	0.00E+00	0.00E+00	0.00E+00	6.06E-14	6.55E-06	6.36E-08	6.06E-14	6.55E-06	6.36E-08
^{241}Pu	0.00E+00	0.00E+00	0.00E+00	7.69E-12	8.31E-04	1.78E-08	7.69E-12	8.31E-04	1.78E-08
^{125}Sb	0.00E+00	0.00E+00	0.00E+00	1.79E-11	1.93E-03	4.11E-09	1.79E-11	1.93E-03	4.11E-09
^{151}Sm	0.00E+00	0.00E+00	0.00E+00	1.17E-10	1.27E-02	1.06E-06	1.17E-10	1.27E-02	1.06E-06
^{152}Sm	0.00E+00	0.00E+00	0.00E+00	1.03E-13	1.11E-05	2.15E-06	1.03E-13	1.11E-05	2.15E-06
^{90}Sr	0.00E+00	0.00E+00	0.00E+00	3.77E-09	4.07E-01	6.49E-06	3.77E-09	4.07E-01	6.49E-06
^{99}Tc	0.00E+00	0.00E+00	0.00E+00	1.42E-11	1.53E-03	1.99E-04	1.42E-11	1.53E-03	1.99E-04
^{232}Th	0.00E+00	0.00E+00	0.00E+00	6.52E-16	7.05E-08	1.41E-03	6.52E-16	7.05E-08	1.41E-03
^{233}U	0.00E+00	0.00E+00	0.00E+00	5.75E-15	6.22E-07	1.42E-07	5.75E-15	6.22E-07	1.42E-07
^{234}U	0.00E+00	0.00E+00	0.00E+00	4.72E-15	5.10E-07	1.81E-07	4.72E-15	5.10E-07	1.81E-07
^{235}U	0.00E+00	0.00E+00	0.00E+00	2.44E-16	2.64E-08	2.69E-05	2.44E-16	2.64E-08	2.69E-05
^{236}U	0.00E+00	0.00E+00	0.00E+00	4.08E-16	4.41E-08	1.50E-06	4.08E-16	4.41E-08	1.50E-06
^{238}U	0.00E+00	0.00E+00	0.00E+00	3.01E-15	3.25E-07	2.13E-03	3.01E-15	3.25E-07	2.13E-03

Table A-5 TLP01 Stream Report

Stream Number: TLP01
Stream Name: Overheads from evaporator with air
Configuration: 0
0
Run Data File: H:\Working Folder 2 (jaba)\MRQ_03_002_run2a_Streams.csv
Run Data / Time: 1/16/2003 - 1:27:28 PM

Read this note for program instructions.

Stream Properties		
Variable	Value	Units
Density	5.78E-05	g/cm³
Enthalpy	-3.35E-07	BTU/hr
Mass Flow	5.89E-03	Lb/hr
	1.41E-05	Lb/day
Volumetric Flow	7.03E-05	GPM
Molar Flow	3.25E-02	Lbmol/hr
Volumetric Flow	2.71E+04	ft³/min
Molecular Weight	1.81E+01	Lb/lbmol
Pressure	9.00E+01	mbar
Temperature	6.56E+01	C
Viscosity	1.13E-02	cP
Na Molarity	0.00E+00	mol/L
pH	#VALUE!	pH
Total TRU	1.42E-14	Ci/L
Total Activity	2.31E-09	Ci/L

Gaseous Components (1)			
Component	mol/L	Lb/day	Mt/day
CO	6.01E-24	4.32E-16	1.86509E-19
CO_2	2.39E-08	2.75E+00	0.001243638
H_2O	3.18E-03	1.40E+05	63.53843723
NO	0.00E+00	0.00E+00	0
NO_2	3.49E-38	3.93E-30	1.78308E-33
N_2	1.15E-05	7.86E+02	0.357401447
O_2	3.09E-06	2.41E+02	0.109517555
SO_2	0.00E+00	0.00E+00	0
NH_3	1.66E-07	6.58E+00	0.003128441
HNO_3	7.55E-18	1.16E-09	5.27358E-13
HCl	4.39E-34	3.80E-26	1.72905E-29
HF	1.02E-50	5.00E-43	2.27073E-46

(1) All radionuclides in gaseous streams are assumed to exist as solid particulate.

Component	Aqueous Components mol/L	Lb/gal	Lb/day	Solid Components Lb/day	Total Component Lb/day	mt/day	g/sec
Total	0.00E+00	0.00E+00	0.00E+00	4.31E+02	4.31E+02	0.195798721	2.266188905
Ag^+	0.00E+00	0.00E+00	0.00E+00	3.70E-03	3.70E-03	1.68365E-06	1.94867E-05
Al^{+3}	0.00E+00	0.00E+00	0.00E+00	1.28E+00	1.28E+00	0.000580711	0.006721194
As^{+3}	0.00E+00	0.00E+00	0.00E+00	1.69E+00	1.69E+00	0.000767843	0.008887071
B^{+3}	0.00E+00	0.00E+00	0.00E+00	1.37E-01	1.37E-01	6.24922E-05	0.000723289
Ba^{+2}	0.00E+00	0.00E+00	0.00E+00	3.82E-03	3.82E-03	1.73633E-06	2.00964E-05
Bi^{+3}	0.00E+00	0.00E+00	0.00E+00	2.96E-03	2.96E-03	1.34717E-06	1.55922E-05
$C_2O_4^{-2}$	0.00E+00	0.00E+00	0.00E+00	3.88E+02	3.88E+02	0.176477905	2.042568343
Ca^{+2}	0.00E+00	0.00E+00	0.00E+00	5.16E-01	5.16E-01	0.000234616	0.002715469
Cd^{+2}	0.00E+00	0.00E+00	0.00E+00	6.39E-03	6.39E-03	2.90625E-06	3.36372E-05
Ce^{+3}	0.00E+00	0.00E+00	0.00E+00	3.39E-02	3.39E-02	1.53977E-05	0.000178206
Cl^-	0.00E+00	0.00E+00	0.00E+00	1.14E+00	1.14E+00	0.000518521	0.006001404
CO_3^{-2}	0.00E+00	0.00E+00	0.00E+00	2.60E+00	2.60E+00	0.0018313	0.013670492
Cr^{+3}	0.00E+00	0.00E+00	0.00E+00	8.43E-03	8.43E-03	3.82435E-06	4.42634E-05
Cu^{+2}	0.00E+00	0.00E+00	0.00E+00	3.88E-03	3.88E-03	1.76309E-06	2.04061E-05
F^-	0.00E+00	0.00E+00	0.00E+00	3.04E-02	3.04E-02	1.38347E-05	0.000160124
Fe^{+3}	0.00E+00	0.00E+00	0.00E+00	1.79E-01	1.79E-01	8.11998E-05	0.000939812
H^+	0.00E+00	0.00E+00	0.00E+00		0.00E+00	0	0
H_2O	0.00E+00	0.00E+00	0.00E+00		0.00E+00	0	0
Hg^{+2}	0.00E+00	0.00E+00	0.00E+00	4.73E-03	4.73E-03	2.14996E-06	2.48838E-05
K^+	0.00E+00	0.00E+00	0.00E+00	5.94E-01	5.94E-01	0.000269887	0.003123687
La^{+3}	0.00E+00	0.00E+00	0.00E+00	3.58E-03	3.58E-03	1.62886E-06	1.88294E-05
Li^+	0.00E+00	0.00E+00	0.00E+00	9.34E-04	9.34E-04	4.24492E-07	4.91315E-06
Mg^{+2}	0.00E+00	0.00E+00	0.00E+00	1.98E-02	1.98E-02	8.98363E-06	0.000103977
Mn^{+2}	0.00E+00	0.00E+00	0.00E+00	7.59E-02	7.59E-02	3.45113E-05	0.000399456
MnO_4^-	0.00E+00	0.00E+00	0.00E+00		0.00E+00	0	0
Na^+	0.00E+00	0.00E+00	0.00E+00	2.31E-01	2.31E-01	0.000105064	0.001216024
NH_4^+	0.00E+00	0.00E+00	0.00E+00	0.00E+00	0.00E+00	0	0
Ni^{+2}	0.00E+00	0.00E+00	0.00E+00	1.72E-03	1.72E-03	7.81366E-07	9.04359E-06
NO_2^-	0.00E+00	0.00E+00	0.00E+00	1.05E+00	1.05E+00	0.000476664	0.00551694
NO_3^-	0.00E+00	0.00E+00	0.00E+00	2.29E+01	2.29E+01	0.010396438	0.120328914
Cl^-				1.20E+00	1.20E+00	0.000543674	0.006292523
OH^-	0.00E+00	0.00E+00	0.00E+00	6.04E+00	6.04E+00	0.002747498	0.031799747
$OH(s)$	0.00E+00	0.00E+00	0.00E+00		0.00E+00	0	0
P^{+5}				8.12E-10	8.12E-10	3.68288E-13	4.27407E-12
Pb^{+2}	0.00E+00	0.00E+00	0.00E+00	9.83E-03	9.83E-03	4.46754E-06	5.17076E-05
Hg^{+2}	0.00E+00	0.00E+00	0.00E+00	1.58E-05	1.58E-05	7.17744E-09	8.30723E-08
PO_4^{-3}	0.00E+00	0.00E+00	0.00E+00	1.78E+00	1.78E+00	0.000809257	0.009366401
S^{+4}				4.67E-28	4.67E-28	2.12144E-31	2.4554E-30
Sr^{+2}				1.19E-01	1.19E-01	5.40529E-05	0.000625612
SiO_4^{-4}	0.00E+00	0.00E+00	0.00E+00		0.00E+00	0	0
SO_4^{-2}	0.00E+00	0.00E+00	0.00E+00	6.90E-01	6.90E-01	0.000313628	0.003629954
Sr^{+3}	0.00E+00	0.00E+00	0.00E+00	6.32E-06	6.32E-06	2.87132E-09	3.32329E-08
Ti^{+4}	0.00E+00	0.00E+00	0.00E+00	1.31E-01	1.31E-01	5.94138E-05	0.000687164
Zn^{+2}	0.00E+00	0.00E+00	0.00E+00	3.40E-02	3.40E-02	1.5438E-05	0.000178638

Zr^{+4}	0.00E+00	0.00E+00	0.00E+00	1.73E-02	1.73E-02	7.85806E-06	9.09498E-05

Rad. Component	Aqueous Rad. Components			Solids Rad. Components (1)			Total Rad. Components (1)		
	Ci/L	Ci/day	Lb/day	Ci/L	Ci/day	Lb/day	Ci/L	Ci/day	Lb/day
Total	0.00E+00	0.00E+00	0.00E+00	2.21E-09	2.44E+00	1.39E-01	2.21E-09	2.44E+00	1.39E-01
^{241}Am	0	0.00E+00	0.00E+00	8.36E-16	9.24E-07	5.94E-10	8.36E-16	9.24E-07	5.94E-10
^{14}C	0.00E+00	0.00E+00	0.00E+00	1.58E-12	1.75E-03	8.64E-07	1.58E-12	1.75E-03	8.64E-07
^{60}Co	0.00E+00	0.00E+00	0.00E+00	2.24E-12	2.47E-03	4.82E-09	2.24E-12	2.47E-03	4.82E-09
^{243}Cm	0.00E+00	0.00E+00	0.00E+00	3.65E-15	4.04E-06	1.76E-10	3.65E-15	4.04E-06	1.76E-10
^{244}Cm	0.00E+00	0.00E+00	0.00E+00	4.69E-15	5.18E-06	1.41E-10	4.69E-15	5.18E-06	1.41E-10
^{137}Cs	0.00E+00	0.00E+00	0.00E+00	1.34E-16	1.49E-07	3.77E-12	1.34E-16	1.49E-07	3.77E-12
^{152}Eu	0.00E+00	0.00E+00	0.00E+00	5.62E-15	6.21E-06	7.88E-11	5.62E-15	6.21E-06	7.88E-11
^{154}Eu	0.00E+00	0.00E+00	0.00E+00	1.86E-14	2.06E-05	1.68E-10	1.86E-14	2.06E-05	1.68E-10
^{155}Eu	0.00E+00	0.00E+00	0.00E+00	3.21E-14	3.54E-05	1.61E-10	3.21E-14	3.54E-05	1.61E-10
^{3}H	0.00E+00	0.00E+00	0.00E+00	2.16E-09	2.39E+00	5.47E-07	2.16E-09	2.39E+00	5.47E-07
^{129}I	0.00E+00	0.00E+00	0.00E+00	2.41E-14	2.67E-05	3.33E-04	2.41E-14	2.67E-05	3.33E-04
^{63}Ni	0.00E+00	0.00E+00	0.00E+00	4.92E-13	5.44E-04	2.11E-08	4.92E-13	5.44E-04	2.11E-08
^{237}Np	0.00E+00	0.00E+00	0.00E+00	4.79E-15	5.30E-06	1.66E-05	4.79E-15	5.30E-06	1.66E-05
^{238}Pu	0.00E+00	0.00E+00	0.00E+00	3.45E-18	3.82E-09	4.91E-13	3.45E-18	3.82E-09	4.91E-13
^{239}Pu	0.00E+00	0.00E+00	0.00E+00	4.05E-17	4.48E-08	1.59E-09	4.05E-17	4.48E-08	1.59E-09
^{240}Pu	0.00E+00	0.00E+00	0.00E+00	7.07E-18	7.81E-09	7.59E-11	7.07E-18	7.81E-09	7.59E-11
^{241}Pu	0.00E+00	0.00E+00	0.00E+00	1.71E-16	1.89E-07	4.05E-12	1.71E-16	1.89E-07	4.05E-12
^{125}Sb	0.00E+00	0.00E+00	0.00E+00	3.04E-11	3.36E-02	7.14E-08	3.04E-11	3.36E-02	7.14E-08
^{151}Sm	0.00E+00	0.00E+00	0.00E+00	4.02E-13	4.44E-04	3.72E-08	4.02E-13	4.44E-04	3.72E-08
^{126}Sn	0.00E+00	0.00E+00	0.00E+00	2.27E-13	2.51E-04	4.88E-05	2.27E-13	2.51E-04	4.88E-05
^{90}Sr	0.00E+00	0.00E+00	0.00E+00	1.10E-11	1.21E-02	1.94E-07	1.10E-11	1.21E-02	1.94E-07
^{99}Tc	0.00E+00	0.00E+00	0.00E+00	1.01E-12	1.11E-03	1.45E-04	1.01E-12	1.11E-03	1.45E-04
^{232}Th	0.00E+00	0.00E+00	0.00E+00	1.70E-15	1.88E-06	3.76E-02	1.70E-15	1.88E-06	3.76E-02
^{233}U	0.00E+00	0.00E+00	0.00E+00	6.19E-14	6.85E-05	1.57E-05	6.19E-14	6.85E-05	1.57E-05
^{234}U	0.00E+00	0.00E+00	0.00E+00	3.60E-14	3.99E-05	1.41E-05	3.60E-14	3.99E-05	1.41E-05
^{235}U	0.00E+00	0.00E+00	0.00E+00	1.39E-15	1.54E-06	1.57E-03	1.39E-15	1.54E-06	1.57E-03
^{236}U	0.00E+00	0.00E+00	0.00E+00	4.17E-15	4.61E-06	1.57E-04	4.17E-15	4.61E-06	1.57E-04
^{238}U	0.00E+00	0.00E+00	0.00E+00	1.36E-14	1.51E-05	9.89E-02	1.36E-14	1.51E-05	9.89E-02

Table A-6 LMP06 Stream Report

Stream Number: LMP06
Stream Name: Melter offgas (primary)
Configuration: 0
0
Run Data File: H:\Working Folder 2 (John)\LMPQ_03_002_run2a_Streams.csv
Run Date / Time: 1/16/2003 - 1:27:28 PM

Read this note for program instructions.

Stream Properties Variable	Value	Units
Density	4.52E-04	g/cm³
Enthalpy	-1.19E+07	BTU/hr
Mass Flow	6.52E+03	Lb/hr
	1.56E+05	Lb/day
Volumetric Flow	2.90E+04	SFM
Molar Flow	2.46E+02	Lbmol/hr
Volumetric Flow	3.74E+03	ft³/min
Molecular Weight	2.58E+01	Lb/Lbmol
Pressure	9.83E+02	mbar
Temperature	4.00E+02	C
Viscosity	3.19E-02	cP
Na Molarity	0.00E+00	mol/L
pH	#N/A	pH
Total TRU	5.92E-11	Ci/L
Total Activity	2.34E-07	Ci/L

Gaseous Components (1) Component	mol/L	Lb/day	Mt/day
CO	1.28E-05	1.21E+02	0.054805914
CO_2	1.29E-03	1.89E+04	8.611111232
H_2O	7.10E-03	4.30E+04	19.53627817
NO	4.35E-04	4.23E+03	1.92435279
NO_2	3.83E-05	5.91E+02	0.268831367
N_2	6.48E-03	6.30E+04	27.74285808
O_2	2.19E-03	2.35E+04	10.69929104
SO_2	1.12E-05	2.42E+02	0.109904136
NH_3	1.32E-07	7.57E-01	0.000344125
HNO_3	0.00E+00	0.00E+00	0
HCl	1.98E-05	2.42E+02	0.110069541
HF	9.62E-06	6.47E+01	0.029406105

(1) All radionuclides in gaseous streams are assumed to exist as solid particulate.

Component	Aqueous Components mol/L	Lb/gal	Lb/day	Solid Components Lb/day	Total Component Lb/day	mt/day	g/sec
Total	0.00E+00	0.00E+00	0.00E+00	4.32E+03	4.32E+03	1.965553824	22.74946556
Ag^+	0.00E+00	0.00E+00	0.00E+00	1.27E-01	1.27E-01	5.76909E-05	0.000667719
Al^{+3}	0.00E+00	0.00E+00	0.00E+00	3.46E+01	3.46E+01	0.015745914	0.182244379
As^{+3}	0.00E+00	0.00E+00	0.00E+00	1.70E+03	1.70E+03	0.774744954	8.966955482
B^{+3}	0.00E+00	0.00E+00	0.00E+00	1.20E+02	1.20E+02	0.054319918	0.628702754
Ba^{+2}	0.00E+00	0.00E+00	0.00E+00	3.93E-02	3.93E-02	1.785E-05	0.000206597
Bi^{+3}	0.00E+00	0.00E+00	0.00E+00	1.21E-01	1.21E-01	5.48918E-05	0.000635322
$C_2O_4^{-2}$	0.00E+00	0.00E+00	0.00E+00	5.44E+02	5.44E+02	0.247066344	2.859564168
Ca^{+2}	0.00E+00	0.00E+00	0.00E+00	6.34E+01	6.34E+01	0.028817849	0.333539919
Cd^{+2}	0.00E+00	0.00E+00	0.00E+00	1.41E+01	1.41E+01	0.006421213	0.074319592
Ce^{+3}	0.00E+00	0.00E+00	0.00E+00	1.66E-01	1.66E-01	7.56046E-05	0.000875054
Cl^-	0.00E+00	0.00E+00	0.00E+00	7.97E+01	7.97E+01	0.036247344	0.419529441
CO_3^{-2}	0.00E+00	0.00E+00	0.00E+00	0.00E+00	0.00E+00	0	0
Cr^{+3}	0.00E+00	0.00E+00	0.00E+00	2.98E+00	2.98E+00	0.001353402	0.015664379
Cu^{+2}	0.00E+00	0.00E+00	0.00E+00	1.99E-02	1.99E-02	9.0631E-06	0.000104897
F^-	0.00E+00	0.00E+00	0.00E+00	1.23E+02	1.23E+02	0.056116938	0.649501599
Fe^{+2}	0.00E+00	0.00E+00	0.00E+00	2.05E+01	2.05E+01	0.009314301	0.107804409
H^+	0.00E+00	0.00E+00	0.00E+00		0.00E+00	0	0
H_2O	0.00E+00	0.00E+00	0.00E+00		0.00E+00	0	0
Hg^{+2}	0.00E+00	0.00E+00	0.00E+00	4.77E+00	4.77E+00	0.002168208	0.025094998
K^+	0.00E+00	0.00E+00	0.00E+00	1.05E-02	1.05E-02	0.047755898	0.552730301
La^{+3}	0.00E+00	0.00E+00	0.00E+00	6.66E-02	6.66E-02	3.02514E-05	0.000350132
Li^+	0.00E+00	0.00E+00	0.00E+00	2.08E-01	2.08E-01	0.009444343	0.109309522
Mg^{+2}	0.00E+00	0.00E+00	0.00E+00	7.75E+00	7.75E+00	0.003521587	0.040759106
Mn^{+2}	0.00E+00	0.00E+00	0.00E+00	1.02E+00	1.02E+00	0.000464187	0.005372537
MnO_4^-	0.00E+00	0.00E+00	0.00E+00		0.00E+00	0	0
Na^+	0.00E+00	0.00E+00	0.00E+00	7.00E+01	7.00E+01	0.031833139	0.368439804
NH_4^+	0.00E+00	0.00E+00	0.00E+00	0.00E+00	0.00E+00	0	0
Ni^{+2}	0.00E+00	0.00E+00	0.00E+00	5.70E-01	5.70E-01	0.000258909	0.002996627
NO_2^-	0.00E+00	0.00E+00	0.00E+00	0.00E+00	0.00E+00	0	0
NO_3^-	0.00E+00	0.00E+00	0.00E+00	0.00E+00	0.00E+00	0	0
O^{-2}				1.14E-03	1.14E-03	0.520386139	6.02298772
OH^-	0.00E+00	0.00E+00	0.00E+00	0.00E+00	0.00E+00	0	0
$OH(s)$	0.00E+00	0.00E+00	0.00E+00		0.00E+00	0	0
P^{+5}				1.46E-01	1.46E-01	0.006656396	0.077041625
Pb^{+2}	0.00E+00	0.00E+00	0.00E+00	2.00E-01	2.00E-01	9.10193E-05	0.001053464
Pd^{+2}	0.00E+00	0.00E+00	0.00E+00	1.21E-03	1.21E-03	5.48794E-07	6.35178E-06
PO_4^{-3}	0.00E+00	0.00E+00	0.00E+00	0.00E+00	0.00E+00	0	0
S^{-2}				0.00E+00	0.00E+00	0	0
Si^{+4}				7.95E+01	7.95E+01	0.036150569	0.418409362
SiO_3^{-2}	0.00E+00	0.00E+00	0.00E+00		0.00E+00	0	0
SO_4^{-2}	0.00E+00	0.00E+00	0.00E+00	0.00E+00	0.00E+00	0	0
Sr^{+2}	0.00E+00	0.00E+00	0.00E+00	1.21E-02	1.21E-02	5.49744E-06	6.36278E-05
Ti^{+4}	0.00E+00	0.00E+00	0.00E+00	1.33E+02	1.33E+02	0.060458999	0.699756914
Zn^{+2}	0.00E+00	0.00E+00	0.00E+00	2.69E+01	2.69E+01	0.012244002	0.141713299

Zr^{+4}	0.00E+00	0.00E+00	0.00E+00	8.19E+00	8.19E+00	0.003720854	0.043065443

Rad. Component	Aqueous Rad. Components			Solids Rad. Components (1)			Total Rad. Components (1)		
	Ci/L	Ci/day	Lb/day	Ci/L	Ci/day	Lb/day	Ci/L	Ci/day	Lb/day
Total	0.00E+00	0.00E+00	0.00E+00	2.34E-07	3.57E-01	8.89E-01	2.34E-07	3.57E-01	8.89E-01
^{241}Am	0	0.00E+00	0.00E+00	4.27E-11	6.51E-03	4.19E-06	4.27E-11	6.51E-03	4.19E-06
^{14}C	0.00E+00	0.00E+00	0.00E+00	6.00E-09	9.14E-01	4.51E-04	6.00E-09	9.14E-01	4.51E-04
^{60}Co	0.00E+00	0.00E+00	0.00E+00	4.26E-11	6.49E-03	1.26E-08	4.26E-11	6.49E-03	1.26E-08
^{242}Cm	0.00E+00	0.00E+00	0.00E+00	1.14E-13	1.74E-05	7.60E-10	1.14E-13	1.74E-05	7.60E-10
^{244}Cm	0.00E+00	0.00E+00	0.00E+00	1.23E-13	1.87E-05	5.09E-10	1.23E-13	1.87E-05	5.09E-10
^{137}Cs	0.00E+00	0.00E+00	0.00E+00	3.04E-09	4.63E-01	1.18E-05	3.04E-09	4.63E-01	1.18E-05
^{152}Eu	0.00E+00	0.00E+00	0.00E+00	1.49E-10	2.27E-02	2.88E-07	1.49E-10	2.27E-02	2.88E-07
^{154}Eu	0.00E+00	0.00E+00	0.00E+00	4.94E-10	7.52E-02	6.14E-07	4.94E-10	7.52E-02	6.14E-07
^{155}Eu	0.00E+00	0.00E+00	0.00E+00	8.50E-10	1.30E-01	5.88E-07	8.50E-10	1.30E-01	5.88E-07
^{3}H	0.00E+00	0.00E+00	0.00E+00	2.95E-09	4.49E-01	1.03E-07	2.95E-09	4.49E-01	1.03E-07
^{129}I	0.00E+00	0.00E+00	0.00E+00	6.99E-11	1.06E-02	1.33E-01	6.99E-11	1.06E-02	1.33E-01
^{93}Nb	0.00E+00	0.00E+00	0.00E+00	6.13E-10	9.35E-02	3.63E-06	6.13E-10	9.35E-02	3.63E-06
^{237}Np	0.00E+00	0.00E+00	0.00E+00	1.84E-13	2.80E-05	8.76E-05	1.84E-13	2.80E-05	8.76E-05
^{238}Pu	0.00E+00	0.00E+00	0.00E+00	2.48E-13	3.78E-05	4.86E-09	2.48E-13	3.78E-05	4.86E-09
^{239}Pu	0.00E+00	0.00E+00	0.00E+00	2.90E-12	4.41E-04	1.57E-05	2.90E-12	4.41E-04	1.57E-05
^{240}Pu	0.00E+00	0.00E+00	0.00E+00	4.99E-13	7.61E-05	7.39E-07	4.99E-13	7.61E-05	7.39E-07
^{241}Pu	0.00E+00	0.00E+00	0.00E+00	1.24E-11	1.88E-03	4.03E-08	1.24E-11	1.88E-03	4.03E-08
^{125}Sb	0.00E+00	0.00E+00	0.00E+00	4.57E-09	6.97E-01	1.48E-06	4.57E-09	6.97E-01	1.48E-06
^{151}Sm	0.00E+00	0.00E+00	0.00E+00	2.82E-08	4.30E+00	3.61E-04	2.82E-08	4.30E+00	3.61E-04
^{126}Sn	0.00E+00	0.00E+00	0.00E+00	1.71E-11	2.60E-03	5.06E-04	1.71E-11	2.60E-03	5.06E-04
^{90}Sr	0.00E+00	0.00E+00	0.00E+00	1.85E-07	2.81E-01	4.49E-04	1.85E-07	2.81E+01	4.49E-04
^{99}Tc	0.00E+00	0.00E+00	0.00E+00	2.46E-09	3.74E-01	4.87E-02	2.46E-09	3.74E-01	4.87E-02
^{232}Th	0.00E+00	0.00E+00	0.00E+00	6.33E-14	9.64E-06	1.93E-01	6.33E-14	9.64E-06	1.93E-01
^{233}U	0.00E+00	0.00E+00	0.00E+00	1.17E-12	1.79E-04	4.10E-05	1.17E-12	1.79E-04	4.10E-05
^{234}U	0.00E+00	0.00E+00	0.00E+00	6.83E-13	1.04E-04	3.70E-05	6.83E-13	1.04E-04	3.70E-05
^{235}U	0.00E+00	0.00E+00	0.00E+00	2.64E-14	4.02E-06	4.10E-03	2.64E-14	4.02E-06	4.10E-03
^{236}U	0.00E+00	0.00E+00	0.00E+00	7.91E-14	1.20E-05	4.11E-04	7.91E-14	1.20E-05	4.11E-04
^{238}U	0.00E+00	0.00E+00	0.00E+00	5.08E-13	7.75E-05	5.08E-01	5.08E-13	7.75E-05	5.08E-01

Table A-7 LVP01 Stream Report

Stream Number: LVP01
Stream Name: LAW vessel ventilation header offgas
Configuration: 0
0
Run Data File: H:\Working Folder 2 (jobs)\WRQ_03_002_run2a_Streams.csv
Run Data / Time: 1/16/2003 - 1:27:28 PM

Read this note
For program computations.

Stream Properties		
Variable	Value	Units
Density	9.99E-04	g/cm³
Enthalpy	-2.97E+05	BTU/lbr
Mass Flow	1.93E+03	Lb/hr
	4.63E+04	Lb/day
Volumetric Flow	3.84E+03	GPM
Molar Flow	6.80E+01	Lbmol/hr
Volumetric Flow	5.16E+02	Ft³/min
Molecular Weight	2.84E+01	Lb/Lbmol
Pressure	8.92E+02	mbar
Temperature	3.20E+01	C
Viscosity	1.85E-02	cP
Na Molarity	0.00E+00	mol/L
pH	[illegible]	pH
Total TRU	0.00E+00	Ci/L
Total Activity	0.00E+00	Ci/L

Gaseous Components (1)			
Component	mol/L	Lb/day	kn/day
CO	0.00E+00	0.00E+00	0
CO_2	0.00E+00	0.00E+00	0
H_2O	1.60E-03	1.52E-03	0.5725980228
HD	0.00E+00	0.00E+00	0
NO_x	0.00E+00	0.00E+00	0
N_2	2.64E-02	3.45E+04	15.70852729
O_2	7.07E-03	1.05E+04	4.768217408
SO_2	0.00E+00	0.00E+00	0
NH_3	0.00E+00	0.00E+00	0
HNO_3	0.00E+00	0.00E+00	0
HCl	0.00E+00	0.00E+00	0
HF	0.00E+00	0.00E+00	0

(1) All radionuclides in gaseous streams are assumed to exist as solid particulate.

Component	Aqueous Components mol/L	Lb/gal	Lb/day	Solid Components Lb/day	Total Component Lb/day	mt/day	g/sec
Total	0.00E+00	0.00E+00	0.00E+00	0.00E+00	0.00E+00	0	0
Ag^+	0.00E+00	0.00E+00	0.00E+00	0.00E+00	0.00E+00	0	0
Al^{+3}	0.00E+00	0.00E+00	0.00E+00	0.00E+00	0.00E+00	0	0
As^{+3}	0.00E+00	0.00E+00	0.00E+00	0.00E+00	0.00E+00	0	0
B^{+3}	0.00E+00	0.00E+00	0.00E+00	0.00E+00	0.00E+00	0	0
Ba^{+2}	0.00E+00	0.00E+00	0.00E+00	0.00E+00	0.00E+00	0	0
Bi^{+3}	0.00E+00	0.00E+00	0.00E+00	0.00E+00	0.00E+00	0	0
$C_2O_4^{-2}$	0.00E+00	0.00E+00	0.00E+00	0.00E+00	0.00E+00	0	0
Ca^{+2}	0.00E+00	0.00E+00	0.00E+00	0.00E+00	0.00E+00	0	0
Cd^{+2}	0.00E+00	0.00E+00	0.00E+00	0.00E+00	0.00E+00	0	0
Ce^{+3}	0.00E+00	0.00E+00	0.00E+00	0.00E+00	0.00E+00	0	0
Cl^-	0.00E+00	0.00E+00	0.00E+00	0.00E+00	0.00E+00	0	0
CO_3^{-2}	0.00E+00	0.00E+00	0.00E+00	0.00E+00	0.00E+00	0	0
Cr^{+3}	0.00E+00	0.00E+00	0.00E+00	0.00E+00	0.00E+00	0	0
Cu^{+2}	0.00E+00	0.00E+00	0.00E+00	0.00E+00	0.00E+00	0	0
F^-	0.00E+00	0.00E+00	0.00E+00	0.00E+00	0.00E+00	0	0
Fe^{+3}	0.00E+00	0.00E+00	0.00E+00	0.00E+00	0.00E+00	0	0
H^+	0.00E+00	0.00E+00	0.00E+00		0.00E+00	0	0
H_2O	0.00E+00	0.00E+00	0.00E+00		0.00E+00	0	0
Hg^{+2}	0.00E+00	0.00E+00	0.00E+00	0.00E+00	0.00E+00	0	0
I^-	0.00E+00	0.00E+00	0.00E+00	0.00E+00	0.00E+00	0	0
La^{+3}	0.00E+00	0.00E+00	0.00E+00	0.00E+00	0.00E+00	0	0
Li^+	0.00E+00	0.00E+00	0.00E+00	0.00E+00	0.00E+00	0	0
Mg^{+2}	0.00E+00	0.00E+00	0.00E+00	0.00E+00	0.00E+00	0	0
Mn^{+2}	0.00E+00	0.00E+00	0.00E+00	0.00E+00	0.00E+00	0	0
MnO_4^-	0.00E+00	0.00E+00	0.00E+00		0.00E+00	0	0
Na^+	0.00E+00	0.00E+00	0.00E+00	0.00E+00	0.00E+00	0	0
NH_4^+	0.00E+00	0.00E+00	0.00E+00	0.00E+00	0.00E+00	0	0
Ni^{+2}	0.00E+00	0.00E+00	0.00E+00	0.00E+00	0.00E+00	0	0
NO_2^-	0.00E+00	0.00E+00	0.00E+00	0.00E+00	0.00E+00	0	0
NO_3^-	0.00E+00	0.00E+00	0.00E+00	0.00E+00	0.00E+00	0	0
O^{-2}				0.00E+00	0.00E+00	0	0
OH^-	0.00E+00	0.00E+00	0.00E+00	0.00E+00	0.00E+00	0	0
$OH(s)$	0.00E+00	0.00E+00	0.00E+00		0.00E+00	0	0
P^{-3}				0.00E+00	0.00E+00	0	0
Pb^{+2}	0.00E+00	0.00E+00	0.00E+00	0.00E+00	0.00E+00	0	0
Pd^{+2}	0.00E+00	0.00E+00	0.00E+00	0.00E+00	0.00E+00	0	0
PO_4^{-3}	0.00E+00	0.00E+00	0.00E+00	0.00E+00	0.00E+00	0	0
S^+				0.00E+00	0.00E+00	0	0
S^{-2}				0.00E+00	0.00E+00	0	0
SiO_3^{-2}	0.00E+00	0.00E+00	0.00E+00		0.00E+00	0	0
SO_4^{-2}	0.00E+00	0.00E+00	0.00E+00	0.00E+00	0.00E+00	0	0
Sr^{+2}	0.00E+00	0.00E+00	0.00E+00	0.00E+00	0.00E+00	0	0
Ti^{+4}	0.00E+00	0.00E+00	0.00E+00	0.00E+00	0.00E+00	0	0
Zn^{+2}	0.00E+00	0.00E+00	0.00E+00	0.00E+00	0.00E+00	0	0

SUBJECT: Integrated Baseline Emissions Report Non-SSFM Represented Constituents Emissions Rate Estimation

Zr^{+4}	0.00E+00	0.00E+00	0.00E+00	0.00E+00	0.00E+00	0	0

Rad. Component	Aqueous Rad. Components			Solids Rad. Components (1)			Total Rad. Components (1)		
	Ci/L	Ci/day	Lb/day	Ci/L	Ci/day	Lb/day	Ci/L	Ci/day	Lb/day
Total	0.00E+00	0.00E+00	0.00E+00	0.00E+00	0.00E+00	0.00E+00	0.00E+00	0.00E+00	0.00E+00
^{241}Am	0	0.00E+00	0.00E+00	0.00E+00	0.00E+00	0.00E+00	0.00E+00	0.00E+00	0.00E+00
^{14}C	0.00E+00	0.00E+00	0.00E+00	0.00E+00	0.00E+00	0.00E+00	0.00E+00	0.00E+00	0.00E+00
^{60}Co	0.00E+00	0.00E+00	0.00E+00	0.00E+00	0.00E+00	0.00E+00	0.00E+00	0.00E+00	0.00E+00
^{242}Cm	0.00E+00	0.00E+00	0.00E+00	0.00E+00	0.00E+00	0.00E+00	0.00E+00	0.00E+00	0.00E+00
^{244}Cm	0.00E+00	0.00E+00	0.00E+00	0.00E+00	0.00E+00	0.00E+00	0.00E+00	0.00E+00	0.00E+00
^{137}Cs	0.00E+00	0.00E+00	0.00E+00	0.00E+00	0.00E+00	0.00E+00	0.00E+00	0.00E+00	0.00E+00
^{152}Eu	0.00E+00	0.00E+00	0.00E+00	0.00E+00	0.00E+00	0.00E+00	0.00E+00	0.00E+00	0.00E+00
^{154}Eu	0.00E+00	0.00E+00	0.00E+00	0.00E+00	0.00E+00	0.00E+00	0.00E+00	0.00E+00	0.00E+00
^{155}Eu	0.00E+00	0.00E+00	0.00E+00	0.00E+00	0.00E+00	0.00E+00	0.00E+00	0.00E+00	0.00E+00
^{3}H	0.00E+00	0.00E+00	0.00E+00	0.00E+00	0.00E+00	0.00E+00	0.00E+00	0.00E+00	0.00E+00
^{129}I	0.00E+00	0.00E+00	0.00E+00	0.00E+00	0.00E+00	0.00E+00	0.00E+00	0.00E+00	0.00E+00
^{63}Ni	0.00E+00	0.00E+00	0.00E+00	0.00E+00	0.00E+00	0.00E+00	0.00E+00	0.00E+00	0.00E+00
^{237}Np	0.00E+00	0.00E+00	0.00E+00	0.00E+00	0.00E+00	0.00E+00	0.00E+00	0.00E+00	0.00E+00
^{238}Pu	0.00E+00	0.00E+00	0.00E+00	0.00E+00	0.00E+00	0.00E+00	0.00E+00	0.00E+00	0.00E+00
^{239}Pu	0.00E+00	0.00E+00	0.00E+00	0.00E+00	0.00E+00	0.00E+00	0.00E+00	0.00E+00	0.00E+00
^{240}Pu	0.00E+00	0.00E+00	0.00E+00	0.00E+00	0.00E+00	0.00E+00	0.00E+00	0.00E+00	0.00E+00
^{241}Pu	0.00E+00	0.00E+00	0.00E+00	0.00E+00	0.00E+00	0.00E+00	0.00E+00	0.00E+00	0.00E+00
^{125}Sb	0.00E+00	0.00E+00	0.00E+00	0.00E+00	0.00E+00	0.00E+00	0.00E+00	0.00E+00	0.00E+00
^{151}Sm	0.00E+00	0.00E+00	0.00E+00	0.00E+00	0.00E+00	0.00E+00	0.00E+00	0.00E+00	0.00E+00
^{121}Sn	0.00E+00	0.00E+00	0.00E+00	0.00E+00	0.00E+00	0.00E+00	0.00E+00	0.00E+00	0.00E+00
^{90}Sr	0.00E+00	0.00E+00	0.00E+00	0.00E+00	0.00E+00	0.00E+00	0.00E+00	0.00E+00	0.00E+00
^{99}Tc	0.00E+00	0.00E+00	0.00E+00	0.00E+00	0.00E+00	0.00E+00	0.00E+00	0.00E+00	0.00E+00
^{232}Th	0.00E+00	0.00E+00	0.00E+00	0.00E+00	0.00E+00	0.00E+00	0.00E+00	0.00E+00	0.00E+00
^{233}U	0.00E+00	0.00E+00	0.00E+00	0.00E+00	0.00E+00	0.00E+00	0.00E+00	0.00E+00	0.00E+00
^{234}U	0.00E+00	0.00E+00	0.00E+00	0.00E+00	0.00E+00	0.00E+00	0.00E+00	0.00E+00	0.00E+00
^{235}U	0.00E+00	0.00E+00	0.00E+00	0.00E+00	0.00E+00	0.00E+00	0.00E+00	0.00E+00	0.00E+00
^{236}U	0.00E+00	0.00E+00	0.00E+00	0.00E+00	0.00E+00	0.00E+00	0.00E+00	0.00E+00	0.00E+00
^{238}U	0.00E+00	0.00E+00	0.00E+00	0.00E+00	0.00E+00	0.00E+00	0.00E+00	0.00E+00	0.00E+00

Table A-8 HMP06 Stream Report

Stream Number: HMP06
Stream Name: Refiner offgas (primary)
Configuration: 0
0
Run Data File: H:\Working Folder 2 (jake)\UMRQ_05_002_run2a_Streams.csv
Run Date / Time: 1/16/2003 - 1:27:28 PM

Read this note for program instructions

Stream Properties Variable	Value	Units
Density	3.64E-04	g/cm³
Enthalpy	-1.57E+07	BTU/hr
Mass Flow	4.83E+03	Lb/hr
	1.16E+05	Lb/day
Volumetric Flow	2.46E+04	gPM
Molar Flow	3.16E+02	Lbmol/hr
Volumetric Flow	3.28E+03	ft³/min
Molecular Weight	2.07E+01	Lb/Lbmol
Pressure	9.23E+02	mbar
Temperature	4.00E+02	C
Viscosity	2.82E-02	cP
Na Molarity	0.00E+00	mol/L
pH	99.0 (M)	pH
Total TRU	4.87E-08	Ci/L
Total Activity	3.26E-05	Ci/L

Gaseous Components (1) Component	mol/L	Lb/day	#/day
CO	2.48E-06	2.00E-01	0.009078662
CO_2	2.43E-04	3.14E-03	1.426440377
H_2O	1.33E-02	7.24E-04	32.89522449
NO	9.22E-05	8.17E-02	0.371542272
NO_2	8.41E-06	1.14E-02	0.051904344
N_2	2.79E-03	2.30E-04	10.46805194
O_2	8.39E-04	7.93E-03	3.602232108
SO_2	1.68E-06	3.18E-01	0.014456888
NH_3	1.74E-06	8.73E-00	0.003968199
HNO_3	0.00E+00	0.00E+00	0
HCl	2.73E-06	2.43E-01	0.011052281
HF	2.43E-06	1.44E-01	0.006538081

(1) All radionuclides in gaseous streams are assumed to exist as solid particulate.

Component	Aqueous Components mol/L	Lb/gal	Lb/day	Solid Components Lb/day	Total Component Lb/day	#/day	g/sec
Total	0.00E+00	0.00E+00	0.00E+00	8.35E+03	8.35E+03	3.796428027	43.9401392
Ag^+	0.00E+00	0.00E+00	0.00E+00	4.61E-01	4.61E-01	0.000209502	0.002424787
Al^{+3}	0.00E+00	0.00E+00	0.00E+00	5.26E+00	5.26E+00	0.002389067	0.027651238
As^{+3}	0.00E+00	0.00E+00	0.00E+00	6.04E+03	6.04E+03	2.74578062	31.77986829
B^{+3}	0.00E+00	0.00E+00	0.00E+00	1.23E+01	1.23E+01	0.005586081	0.064653712
Ba^{+2}	0.00E+00	0.00E+00	0.00E+00	1.08E+00	1.08E+00	0.000490195	0.005673555
Bi^{+3}	0.00E+00	0.00E+00	0.00E+00	6.81E-01	6.81E-01	0.000309381	0.003580794
CrO_4^{-2}	0.00E+00	0.00E+00	0.00E+00	1.74E+02	1.24E+02	0.056293305	0.651542876
Ca^{+2}	0.00E+00	0.00E+00	0.00E+00	2.88E+00	2.88E+00	0.001308268	0.015141986
Cd^{+2}	0.00E+00	0.00E+00	0.00E+00	1.32E+01	1.32E+01	0.006009708	0.069554811
Ce^{+3}	0.00E+00	0.00E+00	0.00E+00	1.13E-01	1.13E-01	5.12838E-05	0.000593563
Cl^-	0.00E+00	0.00E+00	0.00E+00	8.07E+00	8.07E+00	0.003666318	0.042434235
CO_3^{-2}	0.00E+00	0.00E+00	0.00E+00	0.00E+00	0.00E+00	0	0
Cr^{+3}	0.00E+00	0.00E+00	0.00E+00	4.57E-01	4.57E-01	0.000207528	0.00240195
Cu^{+2}	0.00E+00	0.00E+00	0.00E+00	5.90E-02	5.90E-02	2.68366E-05	0.000310609
F^-	0.00E+00	0.00E+00	0.00E+00	2.63E+01	2.63E+01	0.011864666	0.13732252
Fe^{+3}	0.00E+00	0.00E+00	0.00E+00	3.53E+00	3.53E+00	0.00160334	0.018557177
H^+	0.00E+00	0.00E+00	0.00E+00		0.00E+00	0	0
H_2O	0.00E+00	0.00E+00	0.00E+00		0.00E+00	0	0
Hg^{+2}	0.00E+00	0.00E+00	0.00E+00	5.04E+01	5.04E+01	0.022926597	0.265354128
I^-	0.00E+00	0.00E+00	0.00E+00	1.16E+01	1.16E+01	0.005284798	0.06116664
La^{+3}	0.00E+00	0.00E+00	0.00E+00	1.36E+00	1.36E+00	0.000573075	0.006632812
Li^+	0.00E+00	0.00E+00	0.00E+00	1.08E+00	1.08E+00	0.000492691	0.005702442
Mg^{+2}	0.00E+00	0.00E+00	0.00E+00	2.56E-01	2.56E-01	0.000116393	0.001346829
Mn^{+2}	0.00E+00	0.00E+00	0.00E+00	2.18E+00	2.18E+00	0.000990648	0.011465835
MnO_4^-	0.00E+00	0.00E+00	0.00E+00		0.00E+00	0	0
Na^+	0.00E+00	0.00E+00	0.00E+00	1.21E+01	1.21E+01	0.005485947	0.063494761
NH_4^+	0.00E+00	0.00E+00	0.00E+00	0.00E+00	0.00E+00	0	0
Ni^{+2}	0.00E+00	0.00E+00	0.00E+00	7.20E-01	7.20E-01	0.000326687	0.003781862
NO_2^-	0.00E+00	0.00E+00	0.00E+00	0.00E+00	0.00E+00	0	0
NO_3^-	0.00E+00	0.00E+00	0.00E+00	0.00E+00	0.00E+00	0	0
O^{-2}				2.01E+03	2.01E+03	0.913376477	10.57148701
OH^-	0.00E+00	0.00E+00	0.00E+00	0.00E+00	0.00E+00	0	0
$OH(s)$	0.00E+00	0.00E+00	0.00E+00		0.00E+00	0	0
P^{+5}				3.24E+00	3.24E+00	0.001474586	0.017066964
Pb^{+2}	0.00E+00	0.00E+00	0.00E+00	1.51E-01	1.51E-01	6.84193E-05	0.00079189
Pd^{+2}	0.00E+00	0.00E+00	0.00E+00	1.54E-02	1.54E-02	7.07775E-06	8.19155E-05
PO_4^{-3}	0.00E+00	0.00E+00	0.00E+00	0.00E+00	0.00E+00	0	0
S^{+6}				0.00E+00	0.00E+00	0	0
Si^{+4}				8.12E+00	8.12E+00	0.00369192	0.042730556
SiO_3^{-2}	0.00E+00	0.00E+00	0.00E+00		0.00E+00	0	0
SO_4^{-2}	0.00E+00	0.00E+00	0.00E+00	0.00E+00	0.00E+00	0	0
Sr^{+2}	0.00E+00	0.00E+00	0.00E+00	1.25E-01	1.25E-01	5.70161E-05	0.000659909
Ti^{+4}	0.00E+00	0.00E+00	0.00E+00	9.65E+00	9.65E+00	0.004384561	0.050747239
Zn^{+2}	0.00E+00	0.00E+00	0.00E+00	1.85E+00	1.85E+00	0.000842722	0.009753727

SUBJECT: Integrated Baseline Emissions Report Non-SSFM Represented Constituents Emissions Rate Estimation

Zr^{+4}	0.00E+00	0.00E+00	0.00E+00	1.19E+00	1.19E+00	0.000540503	0.006255824

Rad. Component	Aqueous Rad. Components			Solids Rad. Components (1)			Total Rad. Components (1)		
	Ci/L	Ci/day	Lb/day	Ci/L	Ci/day	Lb/day	Ci/L	Ci/day	Lb/day
Total	0.00E+00	0.00E+00	0.00E+00	3.38E-05	4.40E-03	1.39E-01	3.28E-05	4.40E-03	1.39E-01
^{241}Am	0	0.00E+00	0.00E+00	3.62E-08	4.85E-00	3.12E-03	3.62E-08	4.85E+00	3.12E-03
^{14}C	0.00E+00	0.00E+00	0.00E+00	1.20E-09	1.61E-01	7.96E-05	1.20E-09	1.61E-01	7.96E-05
^{60}Co	0.00E+00	0.00E+00	0.00E+00	4.03E-09	5.39E-01	1.05E-06	4.03E-09	5.39E-01	1.05E-06
^{243}Cm	0.00E+00	0.00E+00	0.00E+00	1.21E-09	1.62E-01	7.05E-06	1.21E-09	1.62E-01	7.05E-06
^{244}Cm	0.00E+00	0.00E+00	0.00E+00	9.05E-10	1.21E-01	3.30E-06	9.05E-10	1.21E-01	3.30E-06
^{137}Cs	0.00E+00	0.00E+00	0.00E+00	2.38E-05	3.19E+03	8.10E-02	2.38E-05	3.19E+03	8.10E-02
^{152}Eu	0.00E+00	0.00E+00	0.00E+00	2.10E-10	2.81E-02	3.57E-07	2.10E-10	2.81E-02	3.57E-07
^{154}Eu	0.00E+00	0.00E+00	0.00E+00	2.10E-08	2.81E+00	2.29E-05	2.10E-08	2.81E+00	2.29E-05
^{155}Eu	0.00E+00	0.00E+00	0.00E+00	1.18E-08	1.58E+00	7.15E-06	1.18E-08	1.58E+00	7.15E-06
^{3}H	0.00E+00	0.00E+00	0.00E+00	3.71E-08	4.96E+00	1.14E-06	3.71E-08	4.96E+00	1.14E-06
^{129}I	0.00E+00	0.00E+00	0.00E+00	3.29E-11	4.41E-03	5.50E-02	3.29E-11	4.41E-03	5.50E-02
^{40}K	0.00E+00	0.00E+00	0.00E+00	4.38E-09	5.86E-01	2.28E-05	4.38E-09	5.86E-01	2.28E-05
^{237}Np	0.00E+00	0.00E+00	0.00E+00	2.98E-11	3.99E-03	1.25E-02	2.98E-11	3.99E-03	1.25E-02
^{238}Pu	0.00E+00	0.00E+00	0.00E+00	1.41E-10	1.89E-02	2.43E-06	1.41E-10	1.89E-02	2.43E-06
^{239}Pu	0.00E+00	0.00E+00	0.00E+00	1.25E-09	1.67E-01	5.94E-03	1.25E-09	1.67E-01	5.94E-03
^{240}Pu	0.00E+00	0.00E+00	0.00E+00	6.84E-11	9.16E-03	8.90E-05	6.84E-11	9.16E-03	8.90E-05
^{241}Pu	0.00E+00	0.00E+00	0.00E+00	8.85E-09	1.19E-00	2.54E-05	8.85E-09	1.19E+00	2.54E-05
^{90}Sr	0.00E+00	0.00E+00	0.00E+00	2.64E-08	3.54E+00	7.51E-06	2.64E-08	3.54E+00	7.51E-06
^{99}Tc	0.00E+00	0.00E+00	0.00E+00	4.34E-08	5.82E+00	4.87E-04	4.34E-08	5.82E+00	4.87E-04
^{125}Sn	0.00E+00	0.00E+00	0.00E+00	6.23E-11	8.34E-03	1.62E-03	6.23E-11	8.34E-03	1.62E-03
^{90}Sr	0.00E+00	0.00E+00	0.00E+00	8.11E-06	1.09E+03	1.73E-02	8.11E-06	1.09E+03	1.73E-02
^{99}Tc	0.00E+00	0.00E+00	0.00E+00	6.98E-07	9.35E+01	1.22E+01	6.98E-07	9.35E+01	1.22E+01
^{232}Th	0.00E+00	0.00E+00	0.00E+00	3.23E-13	4.32E-05	8.64E-01	3.23E-13	4.32E-05	8.64E-01
^{233}U	0.00E+00	0.00E+00	0.00E+00	4.96E-13	6.64E-05	1.52E-05	4.96E-13	6.64E-05	1.52E-05
^{234}U	0.00E+00	0.00E+00	0.00E+00	1.39E-12	1.87E-04	6.63E-05	1.39E-12	1.87E-04	6.63E-05
^{235}U	0.00E+00	0.00E+00	0.00E+00	1.04E-13	1.39E-05	1.42E-02	1.04E-13	1.39E-05	1.42E-02
^{236}U	0.00E+00	0.00E+00	0.00E+00	5.00E-14	6.70E-06	2.28E-04	5.00E-14	6.70E-06	2.28E-04
^{238}U	0.00E+00	0.00E+00	0.00E+00	7.98E-13	1.07E-04	7.01E-01	7.98E-13	1.07E-04	7.01E-01

Table A-9 HOP10 Stream Report

Stream Number: HOP10
Stream Name: HLW vessel ventilation header offgas
Configuration: 0
0
Run Data File: H:\Working Folder 2 (John)\MSQ_03_002_run2a_Streams.csv
Run Date / Time: 1/16/2003 - 1:27:28 PM

Read this note for program instructions

Stream Properties Variable	Value	Units
Density	1.14E-03	g/cm³
Enthalpy	-2.56E-04	BTU/hr
Mass Flow	1.88E-02	Lb/hr
	4.51E-03	Lb/day
Volumetric Flow	3.30E-02	SFM
Molar Flow	8.60E-00	Lbmol/hr
Volumetric Flow	4.42E-01	ft³/min
Molecular Weight	2.84E-01	Lb/Lbmol
Pressure	1.00E-03	mbar
Temperature	2.71E-01	C
Viscosity	1.83E-02	cP
Na Molarity	0.00E+00	mol/L
pH	#NUM!	pH
Total TRU	4.50E-11	Ci/L
Total Activity	2.59E-08	Ci/L

Gaseous Components (1) Component	mol/L	Lb/day	mt/day
CO	8.68E-29	9.63E-21	4.37933E-24
CO_2	6.44E-11	1.19E-05	5.27587E-09
H_2O	1.50E-03	2.07E-02	0.048787814
NO	5.79E-32	6.84E-27	3.10968E-30
NO_2	1.60E-41	2.92E-36	1.32595E-39
N_2	3.04E-02	3.38E-03	1.534617849
O_2	8.09E-03	1.03E-03	0.469971203
SO_2	5.50E-34	1.40E-28	6.34356E-32
NH_3	1.00E-09	6.76E-05	3.0711E-08
HNO_3	1.72E-11	4.43E-06	2.01159E-09
HCl	4.39E-44	6.78E-39	3.08215E-42
HF	1.12E-32	6.84E-28	4.02931E-31

(1) All radionuclides in gaseous streams are assumed to exist as solid particulate.

Component	Aqueous Components mol/L	Lb/gal	Lb/day	Solid Components Lb/day	Total Component Lb/day	mt/day	g/sec
Total	0.00E+00	0.00E+00	0.00E+00	8.26E-02	8.26E-02	3.75621E-05	0.000434746
Ag^+	0.00E+00	0.00E+00	0.00E+00	4.77E-06	4.77E-06	2.17023E-09	2.51183E-08
Al^{+3}	0.00E+00	0.00E+00	0.00E+00	5.89E-05	5.89E-05	2.67572E-08	3.09689E-07
As^{+3}	0.00E+00	0.00E+00	0.00E+00	6.05E-02	6.05E-02	2.74882E-05	0.00031815
B^{+3}	0.00E+00	0.00E+00	0.00E+00	1.24E-04	1.24E-04	5.63991E-08	6.52767E-07
Ba^{+2}	0.00E+00	0.00E+00	0.00E+00	1.21E-05	1.21E-05	5.49018E-09	6.35438E-08
Br^{-1}	0.00E+00	0.00E+00	0.00E+00	7.62E-06	7.62E-06	3.4647E-09	4.01007E-08
CrO_4^{-2}	0.00E+00	0.00E+00	0.00E+00	1.49E-05	1.49E-05	6.7552E-09	7.81851E-08
Ca^{+2}	0.00E+00	0.00E+00	0.00E+00	3.14E-05	3.14E-05	1.42595E-08	1.65041E-07
Cd^{+2}	0.00E+00	0.00E+00	0.00E+00	1.34E-04	1.34E-04	6.08146E-08	7.03873E-07
Cr^{+3}	0.00E+00	0.00E+00	0.00E+00	1.63E-06	1.63E-06	7.42225E-10	8.59045E-09
Cl^-	0.00E+00	0.00E+00	0.00E+00	1.36E-04	1.36E-04	6.17912E-08	7.15276E-07
CO_3^{-2}	0.00E+00	0.00E+00	0.00E+00	1.25E-05	1.25E-05	5.70011E-09	6.59735E-08
Cr^{+3}	0.00E+00	0.00E+00	0.00E+00	5.12E-06	5.12E-06	2.32654E-09	2.69278E-08
Co^{+2}	0.00E+00	0.00E+00	0.00E+00	7.32E-07	7.32E-07	3.32746E-10	3.85123E-09
F^-	0.00E+00	0.00E+00	0.00E+00	3.82E-04	3.82E-04	1.73838E-07	2.01201E-06
Fe^{+3}	0.00E+00	0.00E+00	0.00E+00	4.38E-05	4.38E-05	1.99916E-08	2.30237E-07
H^+	0.00E+00	0.00E+00	0.00E+00		0.00E+00	0	0
H_2O	0.00E+00	0.00E+00	0.00E+00		0.00E+00	0	0
Hg^{+2}	0.00E+00	0.00E+00	0.00E+00	4.81E-04	4.81E-04	2.18625E-07	2.53038E-06
K^+	0.00E+00	0.00E+00	0.00E+00	1.19E-04	1.19E-04	5.41217E-08	6.26293E-07
Li^+	0.00E+00	0.00E+00	0.00E+00	1.34E-05	1.34E-05	6.07457E-09	7.03075E-08
Li^+	0.00E+00	0.00E+00	0.00E+00	1.11E-05	1.11E-05	5.04846E-09	5.84313E-08
Mg^{+2}	0.00E+00	0.00E+00	0.00E+00	3.17E-06	3.17E-06	1.44075E-09	1.66753E-08
Mn^{+2}	0.00E+00	0.00E+00	0.00E+00	2.38E-05	2.38E-05	1.07978E-08	1.24975E-07
MnO_4^-	0.00E+00	0.00E+00	0.00E+00		0.00E+00	0	0
Na^+	0.00E+00	0.00E+00	0.00E+00	1.35E-04	1.35E-04	6.14327E-08	7.11026E-07
NH_4^+	0.00E+00	0.00E+00	0.00E+00	0.00E+00	0.00E+00	0	0
Ni^{+2}	0.00E+00	0.00E+00	0.00E+00	7.76E-06	7.76E-06	3.52855E-09	4.08397E-08
NO_2^-	0.00E+00	0.00E+00	0.00E+00	4.67E-06	4.67E-06	2.12552E-09	2.46431E-08
NO_3^-	0.00E+00	0.00E+00	0.00E+00	3.25E-05	3.25E-05	1.47779E-08	1.7104E-07
O^{-2}				2.01E-02	2.01E-02	9.13098E-06	0.000105683
OH^-	0.00E+00	0.00E+00	0.00E+00	4.07E-05	4.07E-05	1.85035E-08	2.14155E-07
$OH(b)^-$	0.00E+00	0.00E+00	0.00E+00		0.00E+00	0	0
P^{-3}				2.41E-13	2.41E-13	1.09333E-16	1.2654E-15
Pb^{+2}	0.00E+00	0.00E+00	0.00E+00	1.87E-06	1.87E-06	8.48306E-10	9.81839E-09
Pd^{+2}	0.00E+00	0.00E+00	0.00E+00	1.93E-07	1.93E-07	8.77599E-11	1.01574E-09
PO_4^{-3}	0.00E+00	0.00E+00	0.00E+00	4.77E-06	4.77E-06	2.17027E-09	2.51189E-08
S^{-2}				3.26E-13	3.26E-13	1.48222E-16	1.71551E-15
S^{+4}				9.07E-05	9.07E-05	4.1229E-08	4.77188E-07
SO_4^{-2}	0.00E+00	0.00E+00	0.00E+00		0.00E+00	0	0
SO_3^{-2}	0.00E+00	0.00E+00	0.00E+00	1.55E-06	1.55E-06	7.02365E-10	8.12923E-09
Sr^{+2}	0.00E+00	0.00E+00	0.00E+00	1.40E-06	1.40E-06	6.38571E-10	7.39087E-09
Ti^{+4}	0.00E+00	0.00E+00	0.00E+00	9.69E-05	9.69E-05	4.40585E-08	5.09937E-07
Zn^{+2}	0.00E+00	0.00E+00	0.00E+00	1.90E-05	1.90E-05	8.65239E-09	1.00143E-07

Zr^{+4}	0.00E+00	0.00E+00	0.00E+00	1.62E-05	1.62E-05	7.35072E-09	8.50777E-06

Rad. Component	Aqueous Rad. Components			Solids Rad. Components (1)			Total Rad. Components (1)		
	Ci/L	Ci/day	Lb/day	Ci/L	Ci/day	Lb/day	Ci/L	Ci/day	Lb/day
Total	0.00E+00	0.00E+00	0.00E+00	2.59E-08	4.65E-02	1.43E-04	2.59E-08	4.65E-02	1.43E-04
^{241}Am	0	0.00E+00	0.00E+00	3.35E-11	6.02E-05	3.87E-08	3.35E-11	6.02E-05	3.87E-08
^{14}C	0.00E+00	0.00E+00	0.00E+00	1.08E-15	1.94E-09	9.55E-13	1.08E-15	1.94E-09	9.55E-13
^{60}Co	0.00E+00	0.00E+00	0.00E+00	3.72E-12	6.69E-06	1.30E-11	3.72E-12	6.69E-06	1.30E-11
^{243}Cm	0.00E+00	0.00E+00	0.00E+00	1.12E-12	2.00E-06	8.74E-11	1.12E-12	2.00E-06	8.74E-11
^{244}Cm	0.00E+00	0.00E+00	0.00E+00	8.36E-13	1.50E-06	4.09E-11	8.36E-13	1.50E-06	4.09E-11
^{137}Cs	0.00E+00	0.00E+00	0.00E+00	1.84E-08	3.31E-02	8.39E-07	1.84E-08	3.31E-02	8.39E-07
^{152}Eu	0.00E+00	0.00E+00	0.00E+00	1.94E-13	3.49E-07	4.42E-12	1.94E-13	3.49E-07	4.42E-12
^{154}Eu	0.00E+00	0.00E+00	0.00E+00	1.94E-11	3.48E-05	2.84E-10	1.94E-11	3.48E-05	2.84E-10
^{155}Eu	0.00E+00	0.00E+00	0.00E+00	1.09E-11	1.95E-05	8.87E-11	1.09E-11	1.95E-05	8.87E-11
^{3}H	0.00E+00	0.00E+00	0.00E+00	2.49E-11	4.48E-05	1.03E-11	2.49E-11	4.48E-05	1.03E-11
^{129}I	0.00E+00	0.00E+00	0.00E+00	4.12E-15	7.40E-09	9.24E-08	4.12E-15	7.40E-09	9.24E-08
^{63}Ni	0.00E+00	0.00E+00	0.00E+00	3.61E-12	6.49E-06	2.52E-10	3.61E-12	6.49E-06	2.52E-10
^{93m}Nb	0.00E+00	0.00E+00	0.00E+00	2.75E-14	4.94E-08	1.55E-07	2.75E-14	4.94E-08	1.55E-07
^{238}Pu	0.00E+00	0.00E+00	0.00E+00	1.30E-13	2.34E-07	3.01E-11	1.30E-13	2.34E-07	3.01E-11
^{239}Pu	0.00E+00	0.00E+00	0.00E+00	1.15E-12	2.07E-06	7.36E-08	1.15E-12	2.07E-06	7.36E-08
^{240}Pu	0.00E+00	0.00E+00	0.00E+00	6.32E-14	1.14E-07	1.10E-09	6.32E-14	1.14E-07	1.10E-09
^{241}Pu	0.00E+00	0.00E+00	0.00E+00	8.18E-12	1.47E-05	3.15E-10	8.18E-12	1.47E-05	3.15E-10
^{125}Sb	0.00E+00	0.00E+00	0.00E+00	2.20E-11	3.96E-05	8.41E-11	2.20E-11	3.96E-05	8.41E-11
^{151}Sm	0.00E+00	0.00E+00	0.00E+00	4.01E-11	7.21E-05	6.04E-09	4.01E-11	7.21E-05	6.04E-09
^{126}Sn	0.00E+00	0.00E+00	0.00E+00	5.76E-14	1.03E-07	2.01E-08	5.76E-14	1.03E-07	2.01E-08
^{90}Sr	0.00E+00	0.00E+00	0.00E+00	6.77E-09	1.22E-02	1.94E-07	6.77E-09	1.22E-02	1.94E-07
^{99}Tc	0.00E+00	0.00E+00	0.00E+00	5.22E-10	9.39E-04	1.22E-04	5.22E-10	9.39E-04	1.22E-04
^{232}Th	0.00E+00	0.00E+00	0.00E+00	2.98E-16	5.36E-10	1.07E-05	2.98E-16	5.36E-10	1.07E-05
^{233}U	0.00E+00	0.00E+00	0.00E+00	4.58E-16	8.24E-10	1.88E-10	4.58E-16	8.24E-10	1.88E-10
^{234}U	0.00E+00	0.00E+00	0.00E+00	1.29E-15	2.31E-09	8.22E-10	1.29E-15	2.31E-09	8.22E-10
^{235}U	0.00E+00	0.00E+00	0.00E+00	9.57E-17	1.72E-10	1.76E-07	9.57E-17	1.72E-10	1.76E-07
^{236}U	0.00E+00	0.00E+00	0.00E+00	4.62E-17	8.31E-11	2.83E-09	4.62E-17	8.31E-11	2.83E-09
^{238}U	0.00E+00	0.00E+00	0.00E+00	7.37E-16	1.33E-09	8.70E-06	7.37E-16	1.33E-09	8.70E-06

Table A-10 PJV32 Stream Report

Stream Number: PJV32
Stream Name: HLW pulse ventilation header effgas
Configuration: 0
0
Run Data File: H:\Working Folder 2 (jaho)\UBQ_03_002_run2u_Streams.csv
Run Date / Time: 1/16/2003 - 1:27:28 PM

Read this note for program instructions.

Stream Properties Variable	Value	Units
Density	1.16E-03	g/cm³
Enthalpy	-8.56E-05	BTU/hr
Mass Flow	2.32E-04	Lb/hr
	5.57E-05	Lb/day
Volumetric Flow	4.00E-04	SFM
Molar Flow	8.08E-02	Lbmol/hr
Volumetric Flow	5.34E-03	ft³/min
Molecular Weight	2.87E-01	Lb/Lbmol
Pressure	1.00E-03	mbar
Temperature	2.50E-01	C
Viscosity	1.83E-02	cP
Na Molarity	0.00E+00	mol/L
pH	#NUM!	pH
Total TRU	6.35E-16	Ci/L
Total Activity	1.21E-13	Ci/L

Gaseous Components (1) Component	mol/L	Lb/day	Mt/day
CO	1.00E-31	1.35E-24	6.13003E-28
CO_2	5.87E-17	1.46E-09	6.59816E-13
H_2O	4.10E-04	3.54E-03	1.60881E-94
NO	3.96E-36	5.70E-29	2.5914E-32
NO_2	1.10E-45	2.43E-38	1.10496E-41
N_2	3.16E-02	4.29E-05	193.0529451
O_2	8.39E-03	1.29E-06	58.61857599
SO_2	4.59E-39	1.43E-31	6.42065E-35
NH_3	1.12E-15	9.16E-09	4.165E-12
HNO_3	6.35E-24	1.92E-16	8.73958E-20
HCl	0.00E+00	0.00E+00	0
HF	7.69E-37	7.39E-30	3.35776E-33

(1) All radionuclides in gaseous streams are assumed to exist as solid particulate.

Component	Aqueous Components mol/L	Lb/gal	Lb/day	Solid Components Lb/day	Total Component Lb/day	mt/day	g/sec
Total	0.00E+00	0.00E+00	0.00E+00	1.24E-05	1.24E-05	5.65638E-09	6.54673E-08
Ag^+	0.00E+00	0.00E+00	0.00E+00	1.97E-09	1.97E-09	8.96953E-13	1.03814E-11
Al^{+3}	0.00E+00	0.00E+00	0.00E+00	5.90E-08	5.90E-08	2.68255E-11	3.1048E-10
As^{+3}	0.00E+00	0.00E+00	0.00E+00	8.13E-06	8.13E-06	3.69761E-09	4.27964E-08
B^{+3}	0.00E+00	0.00E+00	0.00E+00	1.96E-08	1.96E-08	8.91274E-12	1.03157E-10
Ba^{+2}	0.00E+00	0.00E+00	0.00E+00	1.21E-08	1.21E-08	5.50345E-12	6.36973E-11
Bi^{+3}	0.00E+00	0.00E+00	0.00E+00	7.67E-09	7.67E-09	3.48494E-12	4.0335E-11
$C_2O_4^{-2}$	0.00E+00	0.00E+00	0.00E+00	1.24E-07	1.24E-07	5.62933E-11	6.51543E-10
Ca^{+2}	0.00E+00	0.00E+00	0.00E+00	2.51E-08	2.51E-08	1.14223E-11	1.32203E-10
Cd^{+2}	0.00E+00	0.00E+00	0.00E+00	3.03E-08	3.03E-08	1.37524E-11	1.59171E-10
Ce^{+3}	0.00E+00	0.00E+00	0.00E+00	2.40E-09	2.40E-09	1.08868E-12	1.26004E-11
Cl^-	0.00E+00	0.00E+00	0.00E+00	2.32E-08	2.32E-08	1.05337E-11	1.21917E-10
CO_3^{-2}	0.00E+00	0.00E+00	0.00E+00	9.71E-08	9.71E-08	4.41204E-11	5.10653E-10
Cr^{+3}	0.00E+00	0.00E+00	0.00E+00	5.14E-09	5.14E-09	2.33574E-12	2.7034E-11
Cu^{+2}	0.00E+00	0.00E+00	0.00E+00	1.26E-09	1.26E-09	5.70554E-13	6.60363E-12
F^-	0.00E+00	0.00E+00	0.00E+00	6.32E-08	6.32E-08	2.87068E-11	3.32255E-10
Fe^{+3}	0.00E+00	0.00E+00	0.00E+00	7.49E-08	7.49E-08	3.40364E-11	3.9394E-10
H^+	0.00E+00	0.00E+00	0.00E+00		0.00E+00	0	0
H_2O	0.00E+00	0.00E+00	0.00E+00		0.00E+00	0	0
Hg^{+2}	0.00E+00	0.00E+00	0.00E+00	6.45E-08	6.45E-08	2.93341E-11	3.39515E-10
K^+	0.00E+00	0.00E+00	0.00E+00	3.82E-08	3.82E-08	1.73587E-11	2.00911E-10
La^{+3}	0.00E+00	0.00E+00	0.00E+00	7.85E-09	7.85E-09	3.56875E-12	4.1305E-11
Li^+	0.00E+00	0.00E+00	0.00E+00	1.90E-09	1.90E-09	8.62916E-13	9.98745E-12
Mg^{+2}	0.00E+00	0.00E+00	0.00E+00	5.43E-09	5.43E-09	2.46889E-12	2.85519E-11
Mn^{+2}	0.00E+00	0.00E+00	0.00E+00	1.90E-08	1.90E-08	8.64763E-12	1.00088E-10
MnO_4^-	0.00E+00	0.00E+00	0.00E+00		0.00E+00	0	0
Na^+	0.00E+00	0.00E+00	0.00E+00	1.36E-07	1.36E-07	6.17946E-11	7.15216E-10
NH_4^+	0.00E+00	0.00E+00	0.00E+00	0.00E+00	0.00E+00	0	0
Ni^{+2}	0.00E+00	0.00E+00	0.00E+00	7.11E-09	7.11E-09	3.23247E-12	3.74129E-11
NO_2^-	0.00E+00	0.00E+00	0.00E+00	3.89E-08	3.89E-08	1.76708E-11	2.04524E-10
NO_3^-	0.00E+00	0.00E+00	0.00E+00	2.68E-07	2.68E-07	1.21924E-10	1.41105E-09
O^{-2}				2.67E-06	2.67E-06	1.21376E-09	1.4025E-08
OH^-	0.00E+00	0.00E+00	0.00E+00	3.39E-07	3.39E-07	1.5419E-10	1.78461E-09
$OH(b)^-$	0.00E+00	0.00E+00	0.00E+00		0.00E+00	0	0
P^{+3}				2.00E-15	2.00E-15	9.11084E-19	1.0545E-17
Pb^{+2}	0.00E+00	0.00E+00	0.00E+00	3.20E-09	3.20E-09	1.45523E-12	1.68429E-11
Pd^{+2}	0.00E+00	0.00E+00	0.00E+00	3.31E-10	3.31E-10	1.50244E-13	1.73894E-12
PO_4^{-3}	0.00E+00	0.00E+00	0.00E+00	3.98E-08	3.98E-08	1.80854E-11	2.09322E-10
S^{-2}				2.72E-15	2.72E-15	1.23497E-18	1.42936E-17
Se^{+2}				5.61E-08	5.61E-08	2.54947E-11	2.95078E-10
SiO_3^{-2}	0.00E+00	0.00E+00	0.00E+00		0.00E+00	0	0
SO_4^{-2}	0.00E+00	0.00E+00	0.00E+00	1.29E-08	1.29E-08	5.85299E-12	6.77429E-11
Sr^{+2}	0.00E+00	0.00E+00	0.00E+00	1.41E-09	1.41E-09	6.40201E-13	7.40973E-12
Ti^{+4}	0.00E+00	0.00E+00	0.00E+00	1.61E-08	1.61E-08	7.29999E-12	8.44906E-11
Zn^{+2}	0.00E+00	0.00E+00	0.00E+00	3.54E-09	3.54E-09	1.60696E-12	1.85991E-11

Zr^{+4}	0.00E+00	0.00E+00	0.00E+00	3.71E-08	3.71E-08	1.68795E-11	1.95365E-10

Rad. Component	Aqueous Rad. Components			Solids Rad. Components (1)			Total Rad. Components (1)		
	Ci/L	Ci/day	Lb/day	Ci/L	Ci/day	Lb/day	Ci/L	Ci/day	Lb/day
Total	0.00E+00	0.00E+00	0.00E+00	1.21E-13	2.64E-05	5.35E-08	1.21E-13	2.64E-05	5.35E-08
^{241}Am	0	0.00E+00	0.00E+00	4.73E-16	1.03E-07	6.63E-11	4.73E-16	1.03E-07	6.63E-11
^{14}C	0.00E+00	0.00E+00	0.00E+00	7.40E-20	1.61E-11	7.96E-15	7.40E-20	1.61E-11	7.96E-15
^{60}Co	0.00E+00	0.00E+00	0.00E+00	5.26E-17	1.15E-08	2.23E-14	5.26E-17	1.15E-08	2.23E-14
^{243}Cm	0.00E+00	0.00E+00	0.00E+00	1.57E-17	3.43E-09	1.50E-13	1.57E-17	3.43E-09	1.50E-13
^{244}Cm	0.00E+00	0.00E+00	0.00E+00	1.18E-17	2.57E-09	7.01E-14	1.18E-17	2.57E-09	7.01E-14
^{137}Cs	0.00E+00	0.00E+00	0.00E+00	6.25E-14	1.36E-05	3.46E-10	6.25E-14	1.36E-05	3.46E-10
^{152}Eu	0.00E+00	0.00E+00	0.00E+00	2.74E-18	5.97E-10	7.57E-15	2.74E-18	5.97E-10	7.57E-15
^{154}Eu	0.00E+00	0.00E+00	0.00E+00	2.74E-16	5.97E-08	4.87E-13	2.74E-16	5.97E-08	4.87E-13
^{155}Eu	0.00E+00	0.00E+00	0.00E+00	1.54E-16	3.35E-08	1.52E-13	1.54E-16	3.35E-08	1.52E-13
^{3}H	0.00E+00	0.00E+00	0.00E+00	2.75E-17	5.98E-09	1.37E-15	2.75E-17	5.98E-09	1.37E-15
^{129}I	0.00E+00	0.00E+00	0.00E+00	6.36E-21	1.39E-12	1.73E-11	6.36E-21	1.39E-12	1.73E-11
^{63}Ni	0.00E+00	0.00E+00	0.00E+00	2.73E-17	5.95E-09	2.31E-13	2.73E-17	5.95E-09	2.31E-13
^{237}Np	0.00E+00	0.00E+00	0.00E+00	3.89E-19	8.47E-11	2.65E-10	3.89E-19	8.47E-11	2.65E-10
^{238}Pu	0.00E+00	0.00E+00	0.00E+00	1.84E-18	4.01E-10	5.16E-14	1.84E-18	4.01E-10	5.16E-14
^{239}Pu	0.00E+00	0.00E+00	0.00E+00	1.63E-17	3.55E-09	1.26E-10	1.63E-17	3.55E-09	1.26E-10
^{240}Pu	0.00E+00	0.00E+00	0.00E+00	8.93E-19	1.95E-10	1.89E-12	8.93E-19	1.95E-10	1.89E-12
^{241}Pu	0.00E+00	0.00E+00	0.00E+00	1.16E-16	2.52E-08	5.39E-13	1.16E-16	2.52E-08	5.39E-13
^{125}Sb	0.00E+00	0.00E+00	0.00E+00	1.83E-16	3.98E-08	8.45E-14	1.83E-16	3.98E-08	8.45E-14
^{151}Sm	0.00E+00	0.00E+00	0.00E+00	5.67E-16	1.23E-07	1.03E-11	5.67E-16	1.23E-07	1.03E-11
^{126}Sn	0.00E+00	0.00E+00	0.00E+00	8.13E-19	1.77E-10	3.44E-11	8.13E-19	1.77E-10	3.44E-11
^{90}Sr	0.00E+00	0.00E+00	0.00E+00	5.60E-14	1.22E-05	1.95E-10	5.60E-14	1.22E-05	1.95E-10
^{99}Tc	0.00E+00	0.00E+00	0.00E+00	6.66E-16	1.45E-07	1.89E-08	6.66E-16	1.45E-07	1.89E-08
^{232}Th	0.00E+00	0.00E+00	0.00E+00	4.21E-21	9.18E-13	1.84E-08	4.21E-21	9.18E-13	1.84E-08
^{233}U	0.00E+00	0.00E+00	0.00E+00	6.47E-21	1.41E-12	3.23E-13	6.47E-21	1.41E-12	3.23E-13
^{234}U	0.00E+00	0.00E+00	0.00E+00	1.82E-20	3.96E-12	1.41E-12	1.82E-20	3.96E-12	1.41E-12
^{235}U	0.00E+00	0.00E+00	0.00E+00	1.35E-21	2.94E-13	3.00E-10	1.35E-21	2.94E-13	3.00E-10
^{236}U	0.00E+00	0.00E+00	0.00E+00	6.53E-22	1.42E-13	4.85E-12	6.53E-22	1.42E-13	4.85E-12
^{238}U	0.00E+00	0.00E+00	0.00E+00	1.04E-20	2.27E-12	1.49E-08	1.04E-20	2.27E-12	1.49E-08

Table A-11 PVP12 Stream Report

Stream Number: PVP12
Stream Name: Carbon bed absorber discharge
Configuration: 0
0
Run Data File: H:\Working Folder 2 (jahn)\MRQ_03_002_run2a_Streams.csv
Run Date / Time: 1/16/2003 - 1:27:28 PM

Read this note for program instructions.

Stream Properties		
Variable	Value	Units
Density	1.10E-03	g/cm³
Enthalpy	-1.29E+06	BTU/hr
Mass Flow	1.12E+04	Lb/hr
	2.69E+05	Lb/day
Volumetric Flow	2.02E+04	GPM
Molar Flow	3.93E+02	Lbmol/hr
Volumetric Flow	2.70E+03	ft³/min
Molecular Weight	2.85E+01	Lb/Lbmol
Pressure	1.00E+03	mbar
Temperature	3.75E+01	C
Viscosity	1.88E-02	cP
Na Molarity	0.00E+00	mol/L
pH	#NUM!	pH
Total TBU	3.17E-19	Ci/L
Total Activity	2.37E-09	Ci/L

Gaseous Components (1)			
Component	mol/L	Lb/day	Mt/day
CO	2.25E-27	1.83E-20	6.97408E-24
CO_2	1.39E-07	1.48E+00	0.000673417
H_2O	1.24E-03	5.43E+03	2.469559107
NO	5.52E-31	4.02E-24	1.82836E-27
NO_2	3.40E-40	3.80E-33	1.72565E-36
N_2	2.94E-05	2.02E+05	91.74652304
O_2	7.88E-03	6.13E+04	27.84468279
SO_2	3.82E-28	5.95E-21	2.70601E-24
NH_3	2.64E-06	1.09E+01	0.004964848
HNO_3	5.46E-10	8.31E-03	3.77963E-06
HCl	2.21E-33	1.96E-26	8.90994E-30
HF	3.38E-33	1.64E-26	7.47056E-30

(1) All radionuclides in gaseous streams are assumed to exist as solid particulate.

Component	Aqueous Components mol/L	Lb/gal	Lb/day	Solid Components Lb/day	Total Component Lb/day	mt/day	g/sec
Total	0.00E+00	0.00E+00	0.00E+00	2.66E-04	2.66E-04	1.20764E-07	1.39773E-06
Ag^+	0.00E+00	0.00E+00	0.00E+00	9.74E-13	9.74E-13	4.42522E-16	5.12178E-15
Al^{+3}	0.00E+00	0.00E+00	0.00E+00	2.01E-10	2.01E-10	9.14472E-14	1.05842E-12
As^{+3}	0.00E+00	0.00E+00	0.00E+00	2.61E-10	2.61E-10	1.18571E-13	1.37235E-12
B^{+3}	0.00E+00	0.00E+00	0.00E+00	7.28E-12	7.28E-12	3.31054E-15	3.83165E-14
Ba^{+2}	0.00E+00	0.00E+00	0.00E+00	4.89E-12	4.89E-12	2.22341E-15	2.57339E-14
Bi^{+3}	0.00E+00	0.00E+00	0.00E+00	2.69E-12	2.69E-12	1.22474E-15	1.41752E-14
$C_2O_4^{-2}$	0.00E+00	0.00E+00	0.00E+00	2.74E-12	2.74E-12	1.2443E-15	1.44016E-14
Ce^{+3}	0.00E+00	0.00E+00	0.00E+00	6.88E-10	6.88E-10	3.12801E-13	3.62038E-12
Cd^{+2}	0.00E+00	0.00E+00	0.00E+00	1.35E-11	1.35E-11	6.14347E-15	7.1105E-14
Ca^{+2}	0.00E+00	0.00E+00	0.00E+00	4.33E-12	4.33E-12	1.96717E-15	2.27682E-14
Cl^-	0.00E+00	0.00E+00	0.00E+00	4.34E-11	4.34E-11	1.97377E-14	2.28446E-13
CO_3^{-2}	0.00E+00	0.00E+00	0.00E+00	4.59E-10	4.59E-10	2.08653E-13	2.41496E-12
Cr^{+3}	0.00E+00	0.00E+00	0.00E+00	2.36E-11	2.36E-11	1.07048E-14	1.23898E-13
Cu^{+2}	0.00E+00	0.00E+00	0.00E+00	9.22E-13	9.22E-13	4.19243E-16	4.85234E-15
F^-	0.00E+00	0.00E+00	0.00E+00	5.02E-11	5.02E-11	2.28161E-14	2.64076E-13
Fe^{+3}	0.00E+00	0.00E+00	0.00E+00	4.80E-11	4.80E-11	2.1802E-14	2.52338E-13
H^+	0.00E+00	0.00E+00	0.00E+00		0.00E+00	0	0
H_2O	0.00E+00	0.00E+00	0.00E+00		0.00E+00	0	0
Hg^{+2}	0.00E+00	0.00E+00	0.00E+00	2.66E-04	2.66E-04	1.20762E-07	1.3977E-06
K^+	0.00E+00	0.00E+00	0.00E+00	1.78E-10	1.78E-10	8.06942E-14	9.3396E-13
La^{+3}	0.00E+00	0.00E+00	0.00E+00	2.72E-12	2.72E-12	1.23799E-15	1.43286E-14
Li^+	0.00E+00	0.00E+00	0.00E+00	1.05E-12	1.05E-12	4.75862E-16	5.50766E-15
Mg^{+2}	0.00E+00	0.00E+00	0.00E+00	2.61E-11	2.61E-11	1.18833E-14	1.37538E-13
Mn^{+3}	0.00E+00	0.00E+00	0.00E+00	1.45E-11	1.45E-11	6.58003E-15	7.61575E-14
MnO_4^-	0.00E+00	0.00E+00	0.00E+00		0.00E+00	0	0
Na^+	0.00E+00	0.00E+00	0.00E+00	6.93E-10	6.93E-10	3.15038E-13	3.64427E-12
NH_4^+	0.00E+00	0.00E+00	0.00E+00	0.00E+00	0.00E+00	0	0
Ni^{+2}	0.00E+00	0.00E+00	0.00E+00	5.51E-12	5.51E-12	2.50279E-15	2.89675E-14
NO_2^-	0.00E+00	0.00E+00	0.00E+00	2.05E-10	2.05E-10	9.31115E-14	1.07768E-12
NO_3^-	0.00E+00	0.00E+00	0.00E+00	1.09E-09	1.09E-09	4.95164E-13	5.73106E-12
Cl^-				1.05E-10	1.05E-10	4.77097E-14	5.52196E-13
OH^-	0.00E+00	0.00E+00	0.00E+00	8.20E-10	8.20E-10	3.72926E-13	4.31627E-12
$OH(b)^-$	0.00E+00	0.00E+00	0.00E+00		0.00E+00	0	0
p^0				9.14E-17	9.14E-17	4.15479E-20	4.80878E-19
Pb^{+2}	0.00E+00	0.00E+00	0.00E+00	3.81E-12	3.81E-12	1.73308E-15	2.00588E-14
Pd^{+2}	0.00E+00	0.00E+00	0.00E+00	1.01E-13	1.01E-13	4.60419E-17	5.32892E-16
PO_4^{-3}	0.00E+00	0.00E+00	0.00E+00	2.05E-10	2.05E-10	9.34071E-14	1.0811E-12
S^{-2}				2.04E-13	2.04E-13	9.29222E-17	1.07549E-15
Si^{+4}				3.73E-11	3.73E-11	1.69654E-14	1.96358E-13
SiO_3^{-2}	0.00E+00	0.00E+00	0.00E+00		0.00E+00	0	0
SO_4^{-2}	0.00E+00	0.00E+00	0.00E+00	8.39E-11	8.39E-11	3.81357E-14	4.41385E-13
Sr^{+2}	0.00E+00	0.00E+00	0.00E+00	4.19E-13	4.19E-13	1.90495E-16	2.2048E-15
Ti^{+4}	0.00E+00	0.00E+00	0.00E+00	5.70E-12	5.70E-12	2.58866E-15	2.99613E-14
Zn^{+2}	0.00E+00	0.00E+00	0.00E+00	2.01E-12	2.01E-12	9.12022E-16	1.05558E-14

Zr^{+4}	0.00E+00	0.00E+00	0.00E+00	1.60E-11	1.60E-11	7.25411E-15	8.39596E-14

Rad. Component	Aqueous Rad. Components			Solids Rad. Components (1)			Total Rad. Components (1)		
	Ci/L	Ci/day	Lb/day	Ci/L	Ci/day	Lb/day	Ci/L	Ci/day	Lb/day
Total	0.00E+00	0.00E+00	0.00E+00	2.37E-09	2.61E-01	8.82E-07	2.37E-09	2.61E-01	8.82E-07
^{39}Ar	0	0.00E+00	0.00E+00	2.31E-19	2.55E-11	1.64E-14	2.31E-19	2.55E-11	1.64E-14
^{14}C	0.00E+00	0.00E+00	0.00E+00	1.36E-13	1.50E-05	7.42E-09	1.36E-13	1.50E-05	7.42E-09
^{36}Cl	0.00E+00	0.00E+00	0.00E+00	3.82E-20	4.21E-12	8.21E-18	3.82E-20	4.21E-12	8.21E-18
^{241}Cm	0.00E+00	0.00E+00	0.00E+00	1.10E-20	1.22E-12	5.31E-17	1.10E-20	1.22E-12	5.31E-17
^{244}Cm	0.00E+00	0.00E+00	0.00E+00	8.28E-21	9.13E-13	2.49E-17	8.28E-21	9.13E-13	2.49E-17
^{137}Cs	0.00E+00	0.00E+00	0.00E+00	4.09E-17	4.51E-09	1.14E-13	4.09E-17	4.51E-09	1.14E-13
^{152}Eu	0.00E+00	0.00E+00	0.00E+00	4.43E-21	4.89E-13	6.20E-18	4.43E-21	4.89E-13	6.20E-18
^{154}Eu	0.00E+00	0.00E+00	0.00E+00	1.44E-19	1.59E-11	1.29E-16	1.44E-19	1.59E-11	1.29E-16
^{155}Eu	0.00E+00	0.00E+00	0.00E+00	9.26E-20	1.02E-11	4.53E-17	9.26E-20	1.02E-11	4.53E-17
^{3}H	0.00E+00	0.00E+00	0.00E+00	2.37E-09	2.61E-01	6.00E-08	2.37E-09	2.61E-01	6.00E-08
^{129}I	0.00E+00	0.00E+00	0.00E+00	5.92E-16	6.53E-08	8.15E-07	5.92E-16	6.53E-08	8.15E-07
^{90}Sr	0.00E+00	0.00E+00	0.00E+00	1.83E-20	2.02E-12	7.84E-17	1.83E-20	2.02E-12	7.84E-17
^{99}Tc	0.00E+00	0.00E+00	0.00E+00	2.75E-22	3.04E-14	9.50E-14	2.75E-22	3.04E-14	9.50E-14
^{234}U	0.00E+00	0.00E+00	0.00E+00	9.02E-22	9.94E-14	1.28E-17	9.02E-22	9.94E-14	1.28E-17
^{235}U	0.00E+00	0.00E+00	0.00E+00	8.00E-21	8.82E-13	3.13E-14	8.00E-21	8.82E-13	3.13E-14
^{238}U	0.00E+00	0.00E+00	0.00E+00	4.46E-22	4.92E-14	4.77E-16	4.46E-22	4.92E-14	4.77E-16
^{241}Pu	0.00E+00	0.00E+00	0.00E+00	5.66E-20	6.24E-12	1.34E-16	5.66E-20	6.24E-12	1.34E-16
^{125}Sb	0.00E+00	0.00E+00	0.00E+00	1.32E-19	1.45E-11	3.09E-17	1.32E-19	1.45E-11	3.09E-17
^{151}Sm	0.00E+00	0.00E+00	0.00E+00	8.64E-19	9.53E-11	7.98E-15	8.64E-19	9.53E-11	7.98E-15
^{126}Sn	0.00E+00	0.00E+00	0.00E+00	7.54E-22	8.32E-14	1.61E-14	7.54E-22	8.32E-14	1.61E-14
^{90}Sr	0.00E+00	0.00E+00	0.00E+00	2.77E-17	3.06E-09	4.88E-14	2.77E-17	3.06E-09	4.88E-14
^{99}Tc	0.00E+00	0.00E+00	0.00E+00	1.04E-19	1.15E-11	1.50E-12	1.04E-19	1.15E-11	1.50E-12
^{232}Th	0.00E+00	0.00E+00	0.00E+00	4.80E-24	5.29E-16	1.06E-11	4.80E-24	5.29E-16	1.06E-11
^{233}U	0.00E+00	0.00E+00	0.00E+00	4.23E-23	4.67E-15	1.07E-15	4.23E-23	4.67E-15	1.07E-15
^{234}U	0.00E+00	0.00E+00	0.00E+00	3.47E-23	3.83E-15	1.36E-15	3.47E-23	3.83E-15	1.36E-15
^{235}U	0.00E+00	0.00E+00	0.00E+00	1.80E-24	1.98E-16	2.02E-13	1.80E-24	1.98E-16	2.02E-13
^{236}U	0.00E+00	0.00E+00	0.00E+00	3.00E-24	3.31E-16	1.13E-14	3.00E-24	3.31E-16	1.13E-14
^{238}U	0.00E+00	0.00E+00	0.00E+00	2.21E-23	2.44E-15	1.60E-11	2.21E-23	2.44E-15	1.60E-11

Table A-12 PJV11 Stream Report

Stream Number: PJV11
Stream Name: HEPA discharge
Configuration: 0
0

Read this note for program instructions.

Run Data File: H:\Working Folder 2 (jahn)\MBQ_03_002_run2a_Streams.csv
Run Date / Time: 1/16/2003 - 1:27:28 PM

Stream Properties Variable	Value	Units
Density	1.15E-03	g/cm³
Enthalpy	-8.44E-06	BTU/hr
Mass Flow	1.66E-05	Lb/hr
	3.99E-04	Lb/day
Volumetric Flow	2.88E-05	GPM
Molar Flow	5.79E-03	Lbmol/hr
Volumetric Flow	3.85E-04	ft³/min
Molecular Weight	2.87E-01	Lb/Lbmol
Pressure	1.00E-03	mbar
Temperature	2.87E-01	C
Viscosity	1.84E-02	cP
Na Molarity	0.00E+00	mol/L
pH	#VALUE!	pH
Total TBU	5.00E-17	Ci/L
Total Activity	5.97E-13	Ci/L

Gaseous Components (1) Component	mol/L	Lb/day	Mt/day
CO	2.90E-28	2.85E-20	1.27941E-23
CO_2	4.54E-11	6.93E-05	3.14835E-08
H_2O	5.69E-04	3.55E+04	16.13505795
NO	2.31E-31	2.40E-25	1.08909E-28
NO_2	8.24E-39	9.94E-31	4.51828E-34
N_2	3.13E-20	3.03E+06	1378.323746
O_2	8.31E-03	9.21E+05	418.5140778
SO_2	1.05E-34	2.33E-26	1.05781E-29
NH_3	4.38E-11	2.50E-03	1.14673E-06
HNO_3	1.96E-11	4.28E-03	1.94555E-06
HCl	5.71E-32	7.21E-24	3.27559E-27
HF	3.03E-34	2.30E-26	9.54539E-30

(1) All radionuclides in gaseous streams are assumed to exist as solid particulate.

Component	Aqueous Components mol/L	Lb/gal	Lb/day	Solid Components Lb/day	Total Component Lb/day	mt/day	g/sec
Total	0.00E+00	0.00E+00	0.00E+00	3.67E-03	3.67E-03	1.6679E-06	1.93044E-05
Ag^+	0.00E+00	0.00E+00	0.00E+00	1.19E-09	1.19E-09	5.41706E-13	6.26975E-12
Al^{+3}	0.00E+00	0.00E+00	0.00E+00	2.16E-07	2.16E-07	9.81535E-11	1.13604E-09
As^{+3}	0.00E+00	0.00E+00	0.00E+00	4.58E-07	4.58E-07	2.08163E-10	2.40929E-09
B^{+3}	0.00E+00	0.00E+00	0.00E+00	7.10E-09	7.10E-09	3.22915E-12	3.73744E-11
Ba^{+2}	0.00E+00	0.00E+00	0.00E+00	6.86E-09	6.86E-09	3.11714E-12	3.6078E-11
Bi^{+3}	0.00E+00	0.00E+00	0.00E+00	5.24E-09	5.24E-09	2.38405E-12	2.75931E-11
$C_2O_4^{-2}$	0.00E+00	0.00E+00	0.00E+00	6.28E-07	6.28E-07	2.85668E-10	3.30634E-09
Ca^{+2}	0.00E+00	0.00E+00	0.00E+00	5.79E-08	5.79E-08	2.63037E-11	3.04441E-10
Cd^{+2}	0.00E+00	0.00E+00	0.00E+00	2.06E-08	2.06E-08	9.36407E-12	1.0838E-10
Ce^{+3}	0.00E+00	0.00E+00	0.00E+00	4.78E-09	4.78E-09	2.17395E-12	2.51615E-11
Cl^-	0.00E+00	0.00E+00	0.00E+00	5.13E-08	5.13E-08	2.33256E-11	2.69973E-10
CO_3^{-2}	0.00E+00	0.00E+00	0.00E+00	3.11E-07	3.11E-07	1.41261E-10	1.63496E-09
Cr^{+3}	0.00E+00	0.00E+00	0.00E+00	3.12E-08	3.12E-08	1.41838E-11	1.64165E-10
Cu^{+2}	0.00E+00	0.00E+00	0.00E+00	1.09E-09	1.09E-09	4.96373E-13	5.74505E-12
F^-	0.00E+00	0.00E+00	0.00E+00	6.82E-08	6.82E-08	3.10211E-11	3.5904E-10
Fe^{+3}	0.00E+00	0.00E+00	0.00E+00	5.82E-08	5.82E-08	2.64561E-11	3.06205E-10
H^+	0.00E+00	0.00E+00	0.00E+00		0.00E+00	0	0
H_2O	0.00E+00	0.00E+00	0.00E+00		0.00E+00	0	0
Hg^{+2}	0.00E+00	0.00E+00	0.00E+00	3.66E-03	3.66E-03	1.66521E-06	1.92733E-05
I^-	0.00E+00	0.00E+00	0.00E+00	2.09E-07	2.09E-07	9.48457E-11	1.09775E-09
La^{+3}	0.00E+00	0.00E+00	0.00E+00	4.11E-09	4.11E-09	1.86866E-12	2.1628E-11
Li^+	0.00E+00	0.00E+00	0.00E+00	1.48E-09	1.48E-09	6.72836E-13	7.78746E-12
Mg^{+2}	0.00E+00	0.00E+00	0.00E+00	4.40E-09	4.40E-09	2.00191E-12	2.31708E-11
Mn^{+3}	0.00E+00	0.00E+00	0.00E+00	1.71E-08	1.71E-08	7.78859E-12	9.01457E-11
MnO_4^-	0.00E+00	0.00E+00	0.00E+00		0.00E+00	0	0
Na^+	0.00E+00	0.00E+00	0.00E+00	7.42E-07	7.42E-07	3.37109E-10	3.90173E-09
NH_4^+	0.00E+00	0.00E+00	0.00E+00	0.00E+00	0.00E+00	0	0
Ni^{+2}	0.00E+00	0.00E+00	0.00E+00	8.59E-09	8.59E-09	3.90617E-12	4.52103E-11
NO_2^-	0.00E+00	0.00E+00	0.00E+00	2.69E-07	2.69E-07	1.22125E-10	1.41348E-09
NO_3^-	0.00E+00	0.00E+00	0.00E+00	1.41E-06	1.41E-06	6.41309E-10	7.42256E-09
O^{-2}				1.63E-07	1.63E-07	7.39167E-11	8.55517E-10
OH^-	0.00E+00	0.00E+00	0.00E+00	7.98E-07	7.98E-07	3.62651E-10	4.19735E-09
$OH(s)^-$	0.00E+00	0.00E+00	0.00E+00		0.00E+00	0	0
P^{+3}				5.39E-16	5.39E-16	2.44948E-19	2.83505E-18
Pb^{+2}	0.00E+00	0.00E+00	0.00E+00	5.65E-09	5.65E-09	2.56841E-12	2.97269E-11
Pd^{+2}	0.00E+00	0.00E+00	0.00E+00	2.10E-10	2.10E-10	9.55297E-14	1.10567E-12
PO_4^{-3}	0.00E+00	0.00E+00	0.00E+00	1.97E-07	1.97E-07	8.95391E-11	1.03633E-09
S^{+6}				1.63E-15	1.63E-15	7.41195E-19	8.57864E-18
Si^{+4}				3.33E-08	3.33E-08	1.51193E-11	1.74991E-10
SiO_3^{-2}	0.00E+00	0.00E+00	0.00E+00		0.00E+00	0	0
SO_4^{-2}	0.00E+00	0.00E+00	0.00E+00	1.02E-07	1.02E-07	4.63887E-11	5.36906E-10
Sr^{+2}	0.00E+00	0.00E+00	0.00E+00	8.69E-10	8.69E-10	3.95191E-13	4.57397E-12
Ti^{+4}	0.00E+00	0.00E+00	0.00E+00	5.27E-09	5.27E-09	2.39325E-12	2.76996E-11
Zn^{+2}	0.00E+00	0.00E+00	0.00E+00	2.03E-09	2.03E-09	9.21311E-13	1.06633E-11

Zr^{+4}	0.00E+00	0.00E+00	0.00E+00	2.25E-08	2.25E-08	1.02167E-11	1.18249E-10

Rad. Component	Aqueous Rad. Components			Solids Rad. Components (1)			Total Rad. Components (1)		
	Ci/L	Ci/day	Lb/day	Ci/L	Ci/day	Lb/day	Ci/L	Ci/day	Lb/day
Total	0.00E+00	0.00E+00	0.00E+00	5.97E-13	9.37E-04	1.62E-05	5.97E-13	9.37E-04	1.62E-05
^{241}Am	0	0.00E+00	0.00E+00	3.72E-17	5.84E-08	3.76E-11	3.72E-17	5.84E-08	3.76E-11
^{14}C	0.00E+00	0.00E+00	0.00E+00	6.23E-14	9.78E-05	4.83E-08	6.23E-14	9.78E-05	4.83E-08
^{60}Co	0.00E+00	0.00E+00	0.00E+00	4.20E-18	6.60E-09	1.29E-14	4.20E-18	6.60E-09	1.29E-14
^{243}Cm	0.00E+00	0.00E+00	0.00E+00	1.24E-18	1.94E-09	8.47E-14	1.24E-18	1.94E-09	8.47E-14
^{244}Cm	0.00E+00	0.00E+00	0.00E+00	9.27E-19	1.46E-09	3.97E-14	9.27E-19	1.46E-09	3.97E-14
^{137}Cs	0.00E+00	0.00E+00	0.00E+00	4.83E-15	7.58E-06	1.93E-10	4.83E-15	7.58E-06	1.93E-10
^{152}Eu	0.00E+00	0.00E+00	0.00E+00	4.92E-19	7.73E-10	9.80E-15	4.92E-19	7.73E-10	9.80E-15
^{154}Eu	0.00E+00	0.00E+00	0.00E+00	2.24E-17	3.52E-08	2.87E-13	2.24E-17	3.52E-08	2.87E-13
^{155}Eu	0.00E+00	0.00E+00	0.00E+00	1.36E-17	2.14E-08	9.72E-14	1.36E-17	2.14E-08	9.72E-14
^{3}H	0.00E+00	0.00E+00	0.00E+00	5.24E-13	8.23E-04	1.89E-10	5.24E-13	8.23E-04	1.89E-10
^{129}I	0.00E+00	0.00E+00	0.00E+00	8.23E-16	1.29E-06	1.61E-05	8.23E-16	1.29E-06	1.61E-05
^{93}Nb	0.00E+00	0.00E+00	0.00E+00	2.50E-18	3.93E-09	1.53E-13	2.50E-18	3.93E-09	1.53E-13
^{237}Np	0.00E+00	0.00E+00	0.00E+00	3.07E-20	4.82E-11	1.51E-10	3.07E-20	4.82E-11	1.51E-10
^{238}Pu	0.00E+00	0.00E+00	0.00E+00	1.45E-19	2.27E-10	2.93E-14	1.45E-19	2.27E-10	2.93E-14
^{239}Pu	0.00E+00	0.00E+00	0.00E+00	1.28E-18	2.02E-09	7.16E-11	1.28E-18	2.02E-09	7.16E-11
^{240}Pu	0.00E+00	0.00E+00	0.00E+00	7.10E-20	1.12E-10	1.08E-12	7.10E-20	1.12E-10	1.08E-12
^{241}Pu	0.00E+00	0.00E+00	0.00E+00	9.09E-18	1.43E-08	3.06E-13	9.09E-18	1.43E-08	3.06E-13
^{125}Sb	0.00E+00	0.00E+00	0.00E+00	1.78E-17	2.79E-08	5.93E-14	1.78E-17	2.79E-08	5.93E-14
^{151}Sm	0.00E+00	0.00E+00	0.00E+00	9.70E-17	1.52E-07	1.28E-11	9.70E-17	1.52E-07	1.28E-11
^{126}Sn	0.00E+00	0.00E+00	0.00E+00	9.56E-20	1.50E-10	2.92E-11	9.56E-20	1.50E-10	2.92E-11
^{90}Sr	0.00E+00	0.00E+00	0.00E+00	4.33E-15	6.80E-06	1.08E-10	4.33E-15	6.80E-06	1.08E-10
^{99}Tc	0.00E+00	0.00E+00	0.00E+00	1.18E-17	1.85E-08	2.40E-09	1.18E-17	1.85E-08	2.40E-09
^{232}Th	0.00E+00	0.00E+00	0.00E+00	4.49E-22	7.05E-13	1.41E-08	4.49E-22	7.05E-13	1.41E-08
^{233}U	0.00E+00	0.00E+00	0.00E+00	2.70E-21	4.23E-12	9.69E-13	2.70E-21	4.23E-12	9.69E-13
^{234}U	0.00E+00	0.00E+00	0.00E+00	2.70E-21	4.24E-12	1.51E-12	2.70E-21	4.24E-12	1.51E-12
^{235}U	0.00E+00	0.00E+00	0.00E+00	1.55E-22	2.44E-13	2.49E-10	1.55E-22	2.44E-13	2.49E-10
^{236}U	0.00E+00	0.00E+00	0.00E+00	1.98E-22	3.12E-13	1.06E-11	1.98E-22	3.12E-13	1.06E-11
^{238}U	0.00E+00	0.00E+00	0.00E+00	1.76E-21	2.77E-12	1.82E-08	1.76E-21	2.77E-12	1.82E-08

Table A-13 LVP26 Stream Report

Stream Number: LVP26
Stream Name: Activated Carbon Column discharge to stack
Configuration: 0
0
Run Data File: H:\Working Folder 2 (John)\MRQ_03_002_run2a_Streams.csv
Run Data / Time: 1/16/2003 - 1:27:28 PM

Read this note
For program instructions

Stream Properties		
Variable	Value	Units
Density	9.16E-04	g/cm³
Enthalpy	-4.56E+06	BTU/hr
Mass Flow	1.56E+04	Lb/hr
	3.75E+05	Lb/day
Volumetric Flow	3.40E+04	GPM
Molar Flow	5.50E+02	Lbmol/hr
Volumetric Flow	4.55E+03	ft³/min
Molecular Weight	2.84E+01	Lb/lbmol
Pressure	1.00E+03	mbar
Temperature	1.00E+02	C
Viscosity	2.14E-02	cP
Na Molarity	0.00E+00	mol/L
pH	#N/A	pH
Total TRU	6.08E-19	Ci/L
Total Activity	5.27E-09	Ci/L

Gaseous Components (1)			
Component	mol/L	Lb/day	mt/day
CO	1.05E-06	1.21E-01	0.005480591
CO_2	8.67E-04	1.55E-04	7.051801872
H_2O	2.59E-03	1.91E-04	8.688901249
NO	1.44E-05	1.76E-02	0.080181325
NO_2	1.31E-06	2.48E-01	0.011201307
N_2	2.25E-02	2.58E-05	117.2498311
O_2	6.27E-03	8.21E-04	37.31166516
SO_2	7.69E-07	2.01E-01	0.009158678
NH_3	8.92E-07	6.22E-00	0.002825601
HNO_3	3.21E-27	8.29E-20	3.76628E-23
HCl	4.99E-07	7.46E-00	0.003386755
HF	1.32E-07	1.08E-00	0.000490102

(1) All radionuclides in gaseous streams are assumed to exist as solid particulate.

Component	Aqueous Components mol/L	Lb/gal	Lb/day	Solid Components Lb/day	Total Component Lb/day	mt/day	g/sec
Total	0.00E+00	0.00E+00	0.00E+00	4.21E+01	4.21E+01	0.019121167	0.221309799
Ag^+	0.00E+00	0.00E+00	0.00E+00	7.05E-09	7.05E-09	3.20523E-12	3.70976E-11
Al^{+3}	0.00E+00	0.00E+00	0.00E+00	4.33E-07	4.33E-07	1.96948E-10	2.27949E-09
As^{+3}	0.00E+00	0.00E+00	0.00E+00	8.88E-05	8.88E-05	4.03514E-08	4.6703E-07
B^{+3}	0.00E+00	0.00E+00	0.00E+00	1.99E-06	1.99E-06	9.05419E-10	1.04794E-08
Ba^{+2}	0.00E+00	0.00E+00	0.00E+00	1.99E-10	1.99E-10	9.0331E-14	1.0455E-12
Bi^{+3}	0.00E+00	0.00E+00	0.00E+00	7.74E-09	7.74E-09	3.51926E-12	4.07322E-11
$C_2O_4^{-2}$	0.00E+00	0.00E+00	0.00E+00	2.72E+01	2.72E+01	0.01235332	0.142978237
Ca^{+2}	0.00E+00	0.00E+00	0.00E+00	1.59E-06	1.59E-06	7.20568E-10	8.3399E-09
Cd^{+2}	0.00E+00	0.00E+00	0.00E+00	5.52E-07	5.52E-07	2.50836E-10	2.90319E-09
Ce^{+3}	0.00E+00	0.00E+00	0.00E+00	2.08E-09	2.08E-09	9.46574E-13	1.09557E-11
Cl^-	0.00E+00	0.00E+00	0.00E+00	1.33E-06	1.33E-06	6.04154E-10	6.99752E-09
CO_3^{-2}	0.00E+00	0.00E+00	0.00E+00	7.05E-10	7.05E-10	3.20546E-13	3.71002E-12
Cr^{+3}	0.00E+00	0.00E+00	0.00E+00	3.65E-07	3.65E-07	1.65872E-10	1.91981E-09
Co^{+2}	0.00E+00	0.00E+00	0.00E+00	1.15E-09	1.15E-09	5.2325E-13	6.03067E-12
F^-	0.00E+00	0.00E+00	0.00E+00	2.06E-06	2.06E-06	9.3532E-10	1.08255E-08
Fe^{+3}	0.00E+00	0.00E+00	0.00E+00	2.56E-07	2.56E-07	1.16526E-10	1.34869E-09
H^+	0.00E+00	0.00E+00	0.00E+00		0.00E+00	0	0
H_2O	0.00E+00	0.00E+00	0.00E+00		0.00E+00	0	0
Hg^{+2}	0.00E+00	0.00E+00	0.00E+00	1.33E-02	1.33E-02	6.0228E-06	6.97083E-05
K^+	0.00E+00	0.00E+00	0.00E+00	5.15E-06	5.15E-06	2.34107E-09	2.70956E-08
La^{+3}	0.00E+00	0.00E+00	0.00E+00	4.32E-10	4.32E-10	1.96591E-13	2.27536E-12
Li^+	0.00E+00	0.00E+00	0.00E+00	1.24E-06	1.24E-06	5.62212E-10	6.50708E-09
Mg^{+2}	0.00E+00	0.00E+00	0.00E+00	1.94E-07	1.94E-07	8.80755E-11	1.01929E-09
Mn^{+2}	0.00E+00	0.00E+00	0.00E+00	1.70E-08	1.70E-08	7.73996E-12	8.95829E-11
MnO_4^-	0.00E+00	0.00E+00	0.00E+00		0.00E+00	0	0
Na^+	0.00E+00	0.00E+00	0.00E+00	6.73E-06	6.73E-06	3.0612E-09	3.54305E-08
NH_4^+	0.00E+00	0.00E+00	0.00E+00	0.00E+00	0.00E+00	0	0
Ni^{+2}	0.00E+00	0.00E+00	0.00E+00	2.41E-08	2.41E-08	1.09731E-11	1.27003E-10
NO_2^-	0.00E+00	0.00E+00	0.00E+00	2.55E-10	2.55E-10	1.1576E-13	1.33982E-12
NO_3^-	0.00E+00	0.00E+00	0.00E+00	1.32E-09	1.32E-09	5.98822E-13	6.93081E-12
O^{-2}				1.29E-01	1.29E-01	0.005844906	0.067649373
OH^-	0.00E+00	0.00E+00	0.00E+00	6.10E-10	6.10E-10	2.77228E-13	3.20865E-12
$OH(s)$	0.00E+00	0.00E+00	0.00E+00		0.00E+00	0	0
P^{+5}				7.32E-05	7.32E-05	3.3282E-08	3.85208E-07
Pb^{+2}	0.00E+00	0.00E+00	0.00E+00	1.45E-08	1.45E-08	6.59743E-12	7.63591E-11
Pd^{+2}	0.00E+00	0.00E+00	0.00E+00	1.51E-11	1.51E-11	6.87093E-15	7.95246E-14
PO_4^{-3}	0.00E+00	0.00E+00	0.00E+00	1.80E-10	1.80E-10	8.1639E-14	9.44896E-13
S^{-2}				2.02E+00	2.02E+00	0.000916828	0.010611441
S^{+6}				1.33E-06	1.33E-06	6.05056E-10	6.97982E-09
SiO_3^{-2}	0.00E+00	0.00E+00	0.00E+00		0.00E+00	0	0
SO_4^{-2}	0.00E+00	0.00E+00	0.00E+00	9.79E-11	9.79E-11	4.44956E-14	5.14996E-13
Sr^{+2}	0.00E+00	0.00E+00	0.00E+00	1.51E-10	1.51E-10	6.87732E-14	7.95986E-13
Tl^{+2}	0.00E+00	0.00E+00	0.00E+00	1.16E-05	1.16E-05	5.2849E-09	6.11678E-08
Zn^{+2}	0.00E+00	0.00E+00	0.00E+00	6.12E-07	6.12E-07	2.78335E-10	3.22147E-09

Zr^{+4}	0.00E+00	0.00E+00	0.00E+00	1.37E-07	1.37E-07	6.20706E-11	7.3843E-10

Rad. Component	Aqueous Rad. Components			Solids Rad. Components (1)			Total Rad. Components (1)		
	Ci/L	Ci/day	Lb/day	Ci/L	Ci/day	Lb/day	Ci/L	Ci/day	Lb/day
Total	0.00E+00	0.00E+00	0.00E+00	5.27E-09	9.78E-01	1.56E-03	5.27E-09	9.78E-01	1.56E-03
^{90}Am	0	0.00E+00	0.00E+00	4.39E-19	8.16E-11	5.25E-14	4.39E-19	8.16E-11	5.25E-14
^{14}C	0.00E+00	0.00E+00	0.00E+00	4.93E-09	9.14E-01	4.51E-04	4.93E-09	9.14E-01	4.51E-04
^{45}Ca	0.00E+00	0.00E+00	0.00E+00	2.73E-18	5.07E-10	9.88E-16	2.73E-18	5.07E-10	9.88E-16
^{141}Ce	0.00E+00	0.00E+00	0.00E+00	1.18E-21	2.18E-13	9.52E-18	1.18E-21	2.18E-13	9.52E-18
^{144}Ce	0.00E+00	0.00E+00	0.00E+00	1.26E-21	2.34E-13	6.38E-18	1.26E-21	2.34E-13	6.38E-18
^{137}Cs	0.00E+00	0.00E+00	0.00E+00	1.73E-16	3.22E-08	8.17E-13	1.73E-16	3.22E-08	8.17E-13
^{152}Eu	0.00E+00	0.00E+00	0.00E+00	1.53E-18	2.84E-10	3.60E-15	1.53E-18	2.84E-10	3.60E-15
^{154}Eu	0.00E+00	0.00E+00	0.00E+00	5.08E-18	9.42E-10	7.68E-15	5.08E-18	9.42E-10	7.68E-15
^{155}Eu	0.00E+00	0.00E+00	0.00E+00	8.74E-18	1.62E-09	7.36E-15	8.74E-18	1.62E-09	7.36E-15
^{3}H	0.00E+00	0.00E+00	0.00E+00	3.44E-10	6.39E-02	1.47E-08	3.44E-10	6.39E-02	1.47E-08
^{129}I	0.00E+00	0.00E+00	0.00E+00	4.78E-13	8.87E-05	1.11E-03	4.78E-13	8.87E-05	1.11E-03
^{63}Ni	0.00E+00	0.00E+00	0.00E+00	2.13E-17	3.96E-09	1.54E-13	2.13E-17	3.96E-09	1.54E-13
^{147}Pm	0.00E+00	0.00E+00	0.00E+00	1.89E-21	3.50E-13	1.10E-12	1.89E-21	3.50E-13	1.10E-12
^{239}Pu	0.00E+00	0.00E+00	0.00E+00	2.55E-21	4.73E-13	6.09E-17	2.55E-21	4.73E-13	6.09E-17
^{238}Pu	0.00E+00	0.00E+00	0.00E+00	2.98E-20	5.53E-12	1.96E-13	2.98E-20	5.53E-12	1.96E-13
^{240}Pu	0.00E+00	0.00E+00	0.00E+00	5.13E-21	9.53E-13	9.25E-15	5.13E-21	9.53E-13	9.25E-15
^{226}Ra	0.00E+00	0.00E+00	0.00E+00	1.27E-19	2.36E-11	5.05E-16	1.27E-19	2.36E-11	5.05E-16
^{125}Sb	0.00E+00	0.00E+00	0.00E+00	4.61E-16	8.56E-08	1.82E-13	4.61E-16	8.56E-08	1.82E-13
^{79}Se	0.00E+00	0.00E+00	0.00E+00	2.90E-16	5.39E-08	4.51E-12	2.90E-16	5.39E-08	4.51E-12
^{90}Sr	0.00E+00	0.00E+00	0.00E+00	1.76E-19	3.26E-11	6.33E-12	1.76E-19	3.26E-11	6.33E-12
^{90}Sr	0.00E+00	0.00E+00	0.00E+00	1.90E-15	3.52E-07	5.62E-12	1.90E-15	3.52E-07	5.62E-12
^{99}Tc	0.00E+00	0.00E+00	0.00E+00	1.29E-16	2.40E-08	3.12E-09	1.29E-16	2.40E-08	3.12E-09
^{232}Th	0.00E+00	0.00E+00	0.00E+00	6.50E-22	1.21E-13	2.42E-09	6.50E-22	1.21E-13	2.42E-09
^{233}U	0.00E+00	0.00E+00	0.00E+00	1.21E-20	2.24E-12	5.13E-13	1.21E-20	2.24E-12	5.13E-13
^{234}U	0.00E+00	0.00E+00	0.00E+00	7.03E-21	1.30E-12	4.63E-13	7.03E-21	1.30E-12	4.63E-13
^{235}U	0.00E+00	0.00E+00	0.00E+00	2.71E-22	5.03E-14	5.14E-11	2.71E-22	5.03E-14	5.14E-11
^{236}U	0.00E+00	0.00E+00	0.00E+00	8.13E-22	1.51E-13	5.14E-12	8.13E-22	1.51E-13	5.14E-12
^{238}U	0.00E+00	0.00E+00	0.00E+00	5.22E-21	9.70E-13	6.36E-09	5.22E-21	9.70E-13	6.36E-09

Table A-14 HOP33 Stream Report

Stream Number:	HOP33
Stream Name:	Activated Carbon Adsorber Discharge
Configuration:	0
	0
Run Data File:	H:\Working Folder 2 (john)\MBQ_03_002_run2s_Streams.csv
Run Date / Time:	1/16/2003 - 1:27:25 PM

Read this note
For program instructions

Stream Properties Variable	Value	Units
Density	9.12E-04	g/cm³
Enthalpy	-4.93E-06	BTU/hr
Mass Flow	5.38E-03	Lb/hr
	1.29E-05	Lb/day
Volumetric Flow	1.38E-04	GPM
Molar Flow	2.01E-02	Lbmol/hr
Volumetric Flow	1.57E-03	ft³/min
Molecular Weight	2.67E+01	Lb/Lbmol
Pressure	1.00E+03	mbar
Temperature	8.00E+01	C
Viscosity	1.99E-02	cP
Na Molarity	0.00E+00	mol/L
pH	#N/A/ME	pH
Total TRU	1.42E-17	Ci/L
Total Activity	1.03E-08	Ci/L

Gaseous Components (1) Component	mol/L	Lb/day	mt/day
CO	5.04E-07	2.00E+00	0.000907186
CO_2	5.29E-04	3.29E+03	1.496264384
H_2O	7.41E-03	1.89E+04	8.578196871
NO	9.63E-06	4.09E+01	0.018577134
NO_2	8.78E-07	5.71E+00	0.002595217
N_2	2.05E-02	8.13E+04	36.97462273
O_2	5.61E-03	2.54E+04	11.54699556
SO_2	2.93E-06	2.65E+01	0.012047415
NH_3	1.49E-06	3.59E+00	0.001631487
HNO_3	4.97E-13	4.43E-06	2.01159E-09
HCl	3.63E-09	7.87E-02	8.50175E-06
HF	6.36E-10	1.80E-03	8.17216E-07

(1) All radionuclides in gaseous streams are assumed to exist as solid particulate.

Component	Aqueous Components mol/L	Lb/gal	Lb/day	Solid Components Lb/day	Total Component Lb/day	mt/day	g/sec
Total	0.00E+00	0.00E+00	0.00E+00	3.51E+01	3.51E+01	0.015963129	0.184758429
Ag^+	0.00E+00	0.00E+00	0.00E+00	2.56E-10	2.56E-10	1.16498E-13	1.34836E-12
Al^{+3}	0.00E+00	0.00E+00	0.00E+00	7.33E-10	7.33E-10	3.33301E-13	3.85765E-12
As^{+3}	0.00E+00	0.00E+00	0.00E+00	3.15E-06	3.15E-06	1.43147E-09	1.65679E-08
B^{+3}	0.00E+00	0.00E+00	0.00E+00	2.28E-09	2.28E-09	1.03759E-12	1.20092E-11
Ba^{+2}	0.00E+00	0.00E+00	0.00E+00	6.12E-11	6.12E-11	2.78132E-14	3.21912E-13
Bi^{+3}	0.00E+00	0.00E+00	0.00E+00	4.37E-10	4.37E-10	1.98494E-13	2.29739E-12
$C_2O_4^{-2}$	0.00E+00	0.00E+00	0.00E+00	6.19E+00	6.19E+00	0.002814464	0.032577148
Ca^{+2}	0.00E+00	0.00E+00	0.00E+00	8.01E-10	8.01E-10	3.642E-13	4.21528E-12
Cd^{+2}	0.00E+00	0.00E+00	0.00E+00	4.70E-09	4.70E-09	2.13689E-12	2.47326E-11
Ce^{+3}	0.00E+00	0.00E+00	0.00E+00	1.58E-11	1.58E-11	7.18399E-15	8.29165E-14
Cl^-	0.00E+00	0.00E+00	0.00E+00	1.50E-12	1.50E-12	6.82381E-16	7.89792E-15
CO_3^{-2}	0.00E+00	0.00E+00	0.00E+00	6.97E-13	6.97E-13	3.16673E-16	3.66519E-15
Cr^{+3}	0.00E+00	0.00E+00	0.00E+00	6.22E-10	6.22E-10	2.82712E-13	3.27213E-12
Cu^{+2}	0.00E+00	0.00E+00	0.00E+00	3.40E-11	3.40E-11	1.544E-14	1.78703E-13
F^-	0.00E+00	0.00E+00	0.00E+00	4.85E-12	4.85E-12	2.20682E-15	2.55439E-14
Fe^{+3}	0.00E+00	0.00E+00	0.00E+00	4.92E-10	4.92E-10	2.23791E-13	2.59018E-12
H^+	0.00E+00	0.00E+00	0.00E+00		0.00E+00	0	0
H_2O	0.00E+00	0.00E+00	0.00E+00		0.00E+00	0	0
Hg^{+2}	0.00E+00	0.00E+00	0.00E+00	2.40E-03	2.40E-03	1.09181E-06	1.26366E-05
K^+	0.00E+00	0.00E+00	0.00E+00	5.71E-09	5.71E-09	2.59329E-12	3.0015E-11
La^{+3}	0.00E+00	0.00E+00	0.00E+00	9.17E-11	9.17E-11	4.16849E-14	4.82464E-13
Li^+	0.00E+00	0.00E+00	0.00E+00	6.46E-10	6.46E-10	2.93521E-13	3.39723E-12
Mg^{+2}	0.00E+00	0.00E+00	0.00E+00	7.12E-11	7.12E-11	3.23559E-14	3.7449E-13
Mn^{+2}	0.00E+00	0.00E+00	0.00E+00	4.05E-10	4.05E-10	1.84053E-13	2.13025E-12
MnO_4^-	0.00E+00	0.00E+00	0.00E+00		0.00E+00	0	0
Na^+	0.00E+00	0.00E+00	0.00E+00	1.16E-08	1.16E-08	5.27802E-12	6.10882E-11
NH_4^+	0.00E+00	0.00E+00	0.00E+00	0.00E+00	0.00E+00	0	0
Ni^{+2}	0.00E+00	0.00E+00	0.00E+00	3.31E-10	3.31E-10	1.50242E-13	1.73891E-12
NO_2^-	0.00E+00	0.00E+00	0.00E+00	2.59E-13	2.59E-13	1.17807E-16	1.3635E-15
NO_3^-	0.00E+00	0.00E+00	0.00E+00	1.81E-12	1.81E-12	8.20992E-16	9.50222E-15
O^{-2}				2.63E-01	2.63E-01	0.011941357	0.138210149
OH^-	0.00E+00	0.00E+00	0.00E+00	2.26E-12	2.26E-12	1.02795E-15	1.18975E-14
$OH(b)^-$	0.00E+00	0.00E+00	0.00E+00		0.00E+00	0	0
P^{+3}				1.62E-05	1.62E-05	7.37293E-09	8.53348E-08
Pb^{+2}	0.00E+00	0.00E+00	0.00E+00	1.09E-10	1.09E-10	4.96216E-14	5.74324E-13
Pd^{+2}	0.00E+00	0.00E+00	0.00E+00	2.17E-12	2.17E-12	9.87862E-16	1.14336E-14
PO_4^{-3}	0.00E+00	0.00E+00	0.00E+00	2.65E-13	2.65E-13	1.20571E-16	1.39549E-15
S^{+6}				2.65E+00	2.65E+00	0.001206005	0.013958393
Sr^{+2}				1.51E-09	1.51E-09	6.85979E-13	7.93958E-12
SiO_3^{-2}	0.00E+00	0.00E+00	0.00E+00		0.00E+00	0	0
SO_4^{-2}	0.00E+00	0.00E+00	0.00E+00	8.58E-14	8.58E-14	3.90203E-17	4.51624E-16
Sn^{+2}	0.00E+00	0.00E+00	0.00E+00	1.75E-11	1.75E-11	7.95438E-15	9.20646E-14
Ti^{+4}	0.00E+00	0.00E+00	0.00E+00	9.37E-09	9.37E-09	4.26096E-12	4.93166E-11
Zn^{+2}	0.00E+00	0.00E+00	0.00E+00	4.69E-10	4.69E-10	2.13289E-13	2.46843E-12

Zr^{+4}	0.00E+00	0.00E+00	0.00E+00	2.21E-10	2.21E-10	1.00502E-13	1.16321E-12

Rad. Component	Aqueous Rad. Components			Solids Rad. Components (1)			Total Rad. Components (1)		
	Ci/L	Ci/day	Lb/day	Ci/L	Ci/day	Lb/day	Ci/L	Ci/day	Lb/day
Total	0.00E+00	0.00E+00	0.00E+00	1.03E-08	6.61E-01	1.26E-04	1.03E-08	6.61E-01	1.26E-04
^{241}Am	0	0.00E+00	0.00E+00	1.06E-17	6.77E-10	4.36E-13	1.06E-17	6.77E-10	4.36E-13
^{14}C	0.00E+00	0.00E+00	0.00E+00	2.51E-09	1.61E-01	7.96E-05	2.51E-09	1.61E-01	7.96E-05
^{60}Co	0.00E+00	0.00E+00	0.00E+00	6.57E-18	4.22E-10	8.22E-16	6.57E-18	4.22E-10	8.22E-16
^{243}Cm	0.00E+00	0.00E+00	0.00E+00	3.52E-19	2.26E-11	9.84E-16	3.52E-19	2.26E-11	9.84E-16
^{244}Cm	0.00E+00	0.00E+00	0.00E+00	2.64E-19	1.69E-11	4.61E-16	2.64E-19	1.69E-11	4.61E-16
^{137}Cs	0.00E+00	0.00E+00	0.00E+00	3.46E-14	2.22E-06	5.63E-11	3.46E-14	2.22E-06	5.63E-11
^{152}Eu	0.00E+00	0.00E+00	0.00E+00	6.12E-20	3.92E-12	4.98E-17	6.12E-20	3.92E-12	4.98E-17
^{154}Eu	0.00E+00	0.00E+00	0.00E+00	6.12E-18	3.92E-10	3.20E-15	6.12E-18	3.92E-10	3.20E-15
^{155}Eu	0.00E+00	0.00E+00	0.00E+00	3.43E-18	2.20E-10	9.98E-16	3.43E-18	2.20E-10	9.98E-16
^{3}H	0.00E+00	0.00E+00	0.00E+00	7.78E-09	4.99E-01	1.15E-07	7.78E-09	4.99E-01	1.15E-07
^{129}I	0.00E+00	0.00E+00	0.00E+00	5.73E-14	3.67E-06	4.58E-05	5.73E-14	3.67E-06	4.58E-05
^{93}Nb	0.00E+00	0.00E+00	0.00E+00	4.31E-18	2.76E-10	1.07E-14	4.31E-18	2.76E-10	1.07E-14
^{237}Np	0.00E+00	0.00E+00	0.00E+00	8.68E-21	5.57E-13	1.74E-12	8.68E-21	5.57E-13	1.74E-12
^{238}Pu	0.00E+00	0.00E+00	0.00E+00	4.11E-20	2.63E-12	3.39E-16	4.11E-20	2.63E-12	3.39E-16
^{239}Pu	0.00E+00	0.00E+00	0.00E+00	3.64E-19	2.33E-11	8.29E-13	3.64E-19	2.33E-11	8.29E-13
^{240}Pu	0.00E+00	0.00E+00	0.00E+00	1.99E-20	1.28E-12	1.24E-14	1.99E-20	1.28E-12	1.24E-14
^{241}Pu	0.00E+00	0.00E+00	0.00E+00	2.58E-18	1.66E-10	3.54E-15	2.58E-18	1.66E-10	3.54E-15
^{125}Sb	0.00E+00	0.00E+00	0.00E+00	6.77E-17	4.35E-09	9.23E-15	6.77E-17	4.35E-09	9.23E-15
^{151}Sm	0.00E+00	0.00E+00	0.00E+00	1.27E-17	8.12E-10	6.80E-14	1.27E-17	8.12E-10	6.80E-14
^{126}Sn	0.00E+00	0.00E+00	0.00E+00	1.82E-20	1.16E-12	2.26E-13	1.82E-20	1.16E-12	2.26E-13
^{90}Sr	0.00E+00	0.00E+00	0.00E+00	2.36E-15	1.52E-07	2.42E-12	2.36E-15	1.52E-07	2.42E-12
^{99}Tc	0.00E+00	0.00E+00	0.00E+00	9.36E-16	6.00E-08	7.81E-09	9.36E-16	6.00E-08	7.81E-09
^{232}Th	0.00E+00	0.00E+00	0.00E+00	9.41E-23	6.04E-15	1.21E-10	9.41E-23	6.04E-15	1.21E-10
^{233}U	0.00E+00	0.00E+00	0.00E+00	1.45E-22	9.27E-15	2.12E-15	1.45E-22	9.27E-15	2.12E-15
^{234}U	0.00E+00	0.00E+00	0.00E+00	4.06E-22	2.61E-14	9.25E-15	4.06E-22	2.61E-14	9.25E-15
^{235}U	0.00E+00	0.00E+00	0.00E+00	3.02E-23	1.94E-15	1.98E-12	3.02E-23	1.94E-15	1.98E-12
^{236}U	0.00E+00	0.00E+00	0.00E+00	1.46E-23	9.35E-16	3.19E-14	1.46E-23	9.35E-16	3.19E-14
^{238}U	0.00E+00	0.00E+00	0.00E+00	2.33E-22	1.49E-14	9.79E-11	2.33E-22	1.49E-14	9.79E-11

Table A-15 PJV34 Stream Report

Stream Number: PJV34
Stream Name: Pulse vent HEPA discharge offgas
Configuration: 0
0
Run Data File: H:\Working Folder 2 (John)\WRQ_03_002_run2a_Streams.csv
Run Data / Time: 1/16/2003 - 1:27:28 PM

Read this note for program instructions.

Stream Properties Variable	Value	Units
Density	1.14E-03	g/cm³
Enthalpy	-7.99E+05	BTU/hr
Mass Flow	2.32E+04	Lb/hr
	5.57E+05	Lb/day
Volumetric Flow	4.08E+04	SFM
Molar Flow	8.08E+02	Lbmol/hr
Volumetric Flow	5.45E+08	ft³/min
Molecular Weight	2.87E+01	Lb/Lbmol
Pressure	1.00E+03	mbar
Temperature	3.10E+01	C
Viscosity	1.84E+02	cP
Net Molarity	0.00E+00	mol/L
pH	8.94E+00	pH
Total TRU	3.13E-21	Ci/L
Total Activity	2.78E-17	Ci/L

Gaseous Components (1) Component	mol/L	Lb/day	mt/day
CO	5.18E-27	7.11E-20	3.23244E-23
CO_2	1.11E-16	2.39E-09	1.08677E-12
H_2O	4.03E-04	3.54E-03	1.61088137E
NO	9.04E-44	1.33E-36	6.04215E-40
NO_2	7.85E-49	6.43E-42	2.92175E-45
N_2	3.09E-02	4.25E-05	193.0529455
O_2	8.22E-03	1.29E+05	58.61857611
SO_2	0.00E+00	0.00E+00	0
NH_3	2.22E-15	1.85E-08	8.42737E-12
HNO_3	6.22E-24	1.92E-18	8.73343E-20
HCl	1.40E-70	2.51E-63	1.14042E-64
HF	0.00E+00	0.00E+00	0

(1) All radionuclides in gaseous streams are assumed to exist as solid particulate.

Component	Aqueous Components mol/L	Lb/gal	Lb/day	Solid Components Lb/day	Total Component Lb/day	mt/day	g/sec
Total	0.00E+00	0.00E+00	0.00E+00	6.46E-08	6.46E-08	2.93623E-11	3.39841E-10
Ag^+	0.00E+00	0.00E+00	0.00E+00	9.87E-15	9.87E-15	4.48476E-18	5.1907E-17
Al^{+3}	0.00E+00	0.00E+00	0.00E+00	2.95E-13	2.95E-13	1.34127E-16	1.55124E-15
As^{+3}	0.00E+00	0.00E+00	0.00E+00	4.07E-11	4.07E-11	1.84881E-14	2.13982E-13
B^{+3}	0.00E+00	0.00E+00	0.00E+00	9.80E-14	9.80E-14	4.45637E-17	5.15784E-16
Ba^{+2}	0.00E+00	0.00E+00	0.00E+00	6.05E-14	6.05E-14	2.75172E-17	3.18487E-16
Br^{-1}	0.00E+00	0.00E+00	0.00E+00	3.83E-14	3.83E-14	1.74247E-17	2.01675E-16
$C_2O_4^{-2}$	0.00E+00	0.00E+00	0.00E+00	6.19E-13	6.19E-13	2.81467E-16	3.25771E-15
Ca^{+2}	0.00E+00	0.00E+00	0.00E+00	1.26E-13	1.26E-13	5.71117E-17	6.61015E-16
Cd^{+2}	0.00E+00	0.00E+00	0.00E+00	1.51E-13	1.51E-13	6.87626E-17	7.95856E-16
Ce^{+3}	0.00E+00	0.00E+00	0.00E+00	1.20E-14	1.20E-14	5.44338E-18	6.3002E-17
Cl^-	0.00E+00	0.00E+00	0.00E+00	1.16E-13	1.16E-13	5.26684E-17	6.09587E-16
CO_3^{-2}	0.00E+00	0.00E+00	0.00E+00	4.85E-13	4.85E-13	2.20602E-16	2.55327E-15
Cr^{+3}	0.00E+00	0.00E+00	0.00E+00	2.57E-14	2.57E-14	1.16787E-17	1.3517E-16
Cu^{+2}	0.00E+00	0.00E+00	0.00E+00	6.28E-15	6.28E-15	2.85277E-18	3.30182E-17
F^-	0.00E+00	0.00E+00	0.00E+00	3.16E-13	3.16E-13	1.43534E-16	1.66128E-15
Fe^{+2}	0.00E+00	0.00E+00	0.00E+00	3.74E-13	3.74E-13	1.70182E-16	1.9697E-15
H^+	0.00E+00	0.00E+00	0.00E+00		0.00E+00	0	0
H_2O	0.00E+00	0.00E+00	0.00E+00		0.00E+00	0	0
Hg^{+2}	0.00E+00	0.00E+00	0.00E+00	6.45E-08	6.45E-08	2.93341E-11	3.39515E-10
K^+	0.00E+00	0.00E+00	0.00E+00	1.91E-13	1.91E-13	8.67936E-17	1.00456E-15
La^{+3}	0.00E+00	0.00E+00	0.00E+00	3.93E-14	3.93E-14	1.79437E-17	2.06525E-16
Li^+	0.00E+00	0.00E+00	0.00E+00	9.49E-15	9.49E-15	4.31458E-18	4.99373E-17
Mg^{+2}	0.00E+00	0.00E+00	0.00E+00	2.71E-14	2.71E-14	1.23344E-17	1.4276E-16
Mn^{+2}	0.00E+00	0.00E+00	0.00E+00	9.51E-14	9.51E-14	4.3238E-17	5.0044E-16
MnO_4^-	0.00E+00	0.00E+00	0.00E+00		0.00E+00	0	0
Na^+	0.00E+00	0.00E+00	0.00E+00	6.80E-13	6.80E-13	3.08973E-16	3.57608E-15
NH_4^+	0.00E+00	0.00E+00	0.00E+00	0.00E+00	0.00E+00	0	0
Ni^{+2}	0.00E+00	0.00E+00	0.00E+00	3.56E-14	3.56E-14	1.61624E-17	1.87064E-16
NO_2^-	0.00E+00	0.00E+00	0.00E+00	1.94E-13	1.94E-13	8.83542E-17	1.02262E-15
NO_3^-	0.00E+00	0.00E+00	0.00E+00	1.34E-12	1.34E-12	6.09609E-16	7.05577E-15
O^{-2}				1.33E-11	1.33E-11	6.05882E-15	7.01252E-14
OH	0.00E+00	0.00E+00	0.00E+00	1.70E-12	1.70E-12	7.70952E-16	8.92306E-15
$OH(s)^-$	0.00E+00	0.00E+00	0.00E+00		0.00E+00	0	0
P^{+5}				1.00E-20	1.00E-20	4.55543E-24	5.27249E-23
Pb^{+2}	0.00E+00	0.00E+00	0.00E+00	1.60E-14	1.60E-14	7.27613E-18	8.42145E-17
Pd^{+2}	0.00E+00	0.00E+00	0.00E+00	1.65E-15	1.65E-15	7.51723E-19	8.69469E-18
PO_4^{-3}	0.00E+00	0.00E+00	0.00E+00	1.99E-13	1.99E-13	9.04271E-17	1.04661E-15
S^{+4}				1.36E-20	1.36E-20	6.17485E-24	7.14682E-23
Sr^{+2}				2.80E-13	2.80E-13	1.27474E-16	1.47539E-15
SiO_4^{-4}	0.00E+00	0.00E+00	0.00E+00		0.00E+00	0	0
SO_4^{-2}	0.00E+00	0.00E+00	0.00E+00	6.44E-14	6.44E-14	2.92649E-17	3.38715E-16
Sr^{+2}	0.00E+00	0.00E+00	0.00E+00	7.04E-15	7.04E-15	3.201E-18	3.70487E-17
Ti^{+4}	0.00E+00	0.00E+00	0.00E+00	8.03E-14	8.03E-14	3.65E-17	4.22453E-16
Zn^{+2}	0.00E+00	0.00E+00	0.00E+00	1.77E-14	1.77E-14	8.0348E-18	9.29954E-17

SUBJECT: Integrated Baseline Emissions Report Non-SSFM Represented Constituents Emissions Rate Estimation

Zr^{+4}	0.00E+00	0.00E+00	0.00E+00	1.86E-13	1.86E-13	8.43975E-17	9.76823E-16

Rad. Component	Aqueous Rad. Components			Solids Rad. Components (3)			Total Rad. Components (3)		
	Ci/L	Ci/day	Lb/day	Ci/L	Ci/day	Lb/day	Ci/L	Ci/day	Lb/day
Total	0.00E+00	0.00E+00	0.00E+00	2.76E-17	6.13E-09	1.76E-11	2.76E-17	6.13E-09	1.76E-11
^{241}Am	0	0.00E+00	0.00E+00	2.32E-21	5.15E-13	3.31E-16	2.32E-21	5.15E-13	3.31E-16
^{14}C	0.00E+00	0.00E+00	0.00E+00	7.26E-20	1.61E-11	7.96E-15	7.26E-20	1.61E-11	7.96E-15
^{109}Cd	0.00E+00	0.00E+00	0.00E+00	2.58E-22	5.73E-14	1.12E-19	2.58E-22	5.73E-14	1.12E-19
^{243}Cm	0.00E+00	0.00E+00	0.00E+00	7.72E-23	1.72E-14	7.48E-19	7.72E-23	1.72E-14	7.48E-19
^{244}Cm	0.00E+00	0.00E+00	0.00E+00	5.79E-23	1.29E-14	3.50E-19	5.79E-23	1.29E-14	3.50E-19
^{51}Cr	0.00E+00	0.00E+00	0.00E+00	3.06E-19	6.81E-11	1.73E-15	3.06E-19	6.81E-11	1.73E-15
^{152}Eu	0.00E+00	0.00E+00	0.00E+00	1.34E-23	2.98E-15	3.79E-20	1.34E-23	2.98E-15	3.79E-20
^{154}Eu	0.00E+00	0.00E+00	0.00E+00	1.34E-21	2.98E-13	2.43E-18	1.34E-21	2.98E-13	2.43E-18
^{155}Eu	0.00E+00	0.00E+00	0.00E+00	7.53E-22	1.67E-13	7.59E-19	7.53E-22	1.67E-13	7.59E-19
^{3}H	0.00E+00	0.00E+00	0.00E+00	2.69E-17	5.98E-09	1.37E-15	2.69E-17	5.98E-09	1.37E-15
^{129}I	0.00E+00	0.00E+00	0.00E+00	6.23E-21	1.39E-12	1.73E-11	6.23E-21	1.39E-12	1.73E-11
^{63}Ni	0.00E+00	0.00E+00	0.00E+00	1.34E-22	2.97E-14	1.15E-18	1.34E-22	2.97E-14	1.15E-18
^{93m}Nb	0.00E+00	0.00E+00	0.00E+00	1.90E-24	4.23E-16	1.32E-15	1.90E-24	4.23E-16	1.32E-15
^{94}Nb	0.00E+00	0.00E+00	0.00E+00	9.01E-24	2.00E-15	2.58E-19	9.01E-24	2.00E-15	2.58E-19
^{106}Ru	0.00E+00	0.00E+00	0.00E+00	7.98E-23	1.77E-14	6.30E-16	7.98E-23	1.77E-14	6.30E-16
^{103}Ru	0.00E+00	0.00E+00	0.00E+00	4.38E-24	9.73E-16	9.45E-18	4.38E-24	9.73E-16	9.45E-18
^{125}Sb	0.00E+00	0.00E+00	0.00E+00	5.66E-22	1.26E-13	2.69E-18	5.66E-22	1.26E-13	2.69E-18
^{124}Sb	0.00E+00	0.00E+00	0.00E+00	8.95E-22	1.99E-13	4.23E-19	8.95E-22	1.99E-13	4.23E-19
^{151}Sm	0.00E+00	0.00E+00	0.00E+00	2.78E-21	6.17E-13	5.17E-17	2.78E-21	6.17E-13	5.17E-17
^{113}Sn	0.00E+00	0.00E+00	0.00E+00	3.98E-24	8.85E-16	1.72E-16	3.98E-24	8.85E-16	1.72E-16
^{90}Sr	0.00E+00	0.00E+00	0.00E+00	2.74E-19	6.10E-11	9.73E-16	2.74E-19	6.10E-11	9.73E-16
^{99}Tc	0.00E+00	0.00E+00	0.00E+00	3.26E-21	7.26E-13	9.44E-14	3.26E-21	7.26E-13	9.44E-14
^{232}Th	0.00E+00	0.00E+00	0.00E+00	2.06E-26	4.59E-18	9.20E-14	2.06E-26	4.59E-18	9.20E-14
^{233}U	0.00E+00	0.00E+00	0.00E+00	3.17E-26	7.05E-18	1.61E-18	3.17E-26	7.05E-18	1.61E-18
^{234}U	0.00E+00	0.00E+00	0.00E+00	8.91E-26	1.98E-17	7.04E-18	8.91E-26	1.98E-17	7.04E-18
^{235}U	0.00E+00	0.00E+00	0.00E+00	6.62E-27	1.47E-18	1.50E-15	6.62E-27	1.47E-18	1.50E-15
^{236}U	0.00E+00	0.00E+00	0.00E+00	3.20E-27	7.11E-19	2.42E-17	3.20E-27	7.11E-19	2.42E-17
^{238}U	0.00E+00	0.00E+00	0.00E+00	5.10E-26	1.13E-17	7.44E-14	5.10E-26	1.13E-17	7.44E-14

Table A-16 LFP06 Stream Report

Stream Number: LFP06
Stream Name: LAW LFP Vents
Configuration: 0
0
Run Data File: H:\Working Folder 2 (John)\MRQ_03_002_naOx_Streams.csv
Run Date / Time: 1/16/2003 - 1:27:28 PM

Read this note for program instructions

Stream Properties Variable	Value	Units
Density	1.13E-03	g/cm³
Enthalpy	-5.49E+04	BTU/hr
Mass Flow	6.15E+02	Lb/hr
	1.48E+04	Lb/day
Volumetric Flow	1.09E+03	GPM
Molar Flow	2.17E+01	Lbmol/hr
Volumetric Flow	1.46E+02	ft³/min
Molecular Weight	2.84E+01	Lb/Lbmol
Pressure	1.00E+03	mbar
Temperature	3.00E+01	C
Viscosity	1.84E-02	cP
Na Molarity	0.00E+00	mol/L
pH	#NUM!	pH
Total TBU	6.06E-15	Ci/L
Total Activity	1.29E-11	Ci/L

Gaseous Components (1) Component	mol/L	Lb/day	Mt/day
CO	3.58E-42	1.32E-36	5.97736E-40
CO_2	8.60E-50	4.92E-44	2.23488E-47
H_2O	1.69E-03	4.00E+02	0.181634522
NO	6.79E-34	2.64E-28	1.19801E-31
NO_2	8.34E-55	5.02E-49	2.28355E-52
N_2	3.00E-02	1.10E+04	5.008999025
O_2	7.98E-03	3.35E+03	1.520931938
SO_2	4.57E-37	3.83E-31	1.74273E-34
NH_3	6.79E-14	1.51E-08	6.88249E-12
HNO_3	9.21E-26	7.61E-20	3.45743E-23
HCl	0.00E+00	0.00E+00	0
HF	0.00E+00	0.00E+00	0

(1) All radionuclides in gaseous streams are assumed to exist as solid particulate.

Component	Aqueous Components mol/L	Lb/gal	Lb/day	Solid Components Lb/day	Total Component Lb/day	mt/day	g/sec
Total	0.00E+00	0.00E+00	0.00E+00	1.96E-03	1.96E-03	8.93098E-07	1.03368E-05
Ag^+	0.00E+00	0.00E+00	0.00E+00	7.62E-08	7.62E-08	3.46146E-11	4.00632E-10
Al^{+3}	0.00E+00	0.00E+00	0.00E+00	5.40E-05	5.40E-05	2.45664E-08	2.84334E-07
As^{+3}	0.00E+00	0.00E+00	0.00E+00	3.41E-05	3.41E-05	1.54949E-08	1.79339E-07
B^{+3}	0.00E+00	0.00E+00	0.00E+00	3.72E-05	3.72E-05	1.69265E-08	1.95909E-07
Ba^{+2}	0.00E+00	0.00E+00	0.00E+00	7.85E-08	7.85E-08	3.57E-11	4.13195E-10
Bi^{+3}	0.00E+00	0.00E+00	0.00E+00	2.42E-07	2.42E-07	1.09784E-10	1.27064E-09
$C_2O_4^{-2}$	0.00E+00	0.00E+00	0.00E+00	1.09E-04	1.09E-04	4.94133E-08	5.71913E-07
Ca^{+2}	0.00E+00	0.00E+00	0.00E+00	5.27E-05	5.27E-05	2.39572E-08	2.77282E-07
Cd^{+2}	0.00E+00	0.00E+00	0.00E+00	2.83E-06	2.83E-06	1.28424E-09	1.48639E-08
Ce^{+3}	0.00E+00	0.00E+00	0.00E+00	6.65E-07	6.65E-07	3.02419E-10	3.50022E-09
Cl^-	0.00E+00	0.00E+00	0.00E+00	1.20E-05	1.20E-05	5.44441E-09	6.30141E-08
CO_3^{-2}	0.00E+00	0.00E+00	0.00E+00	1.41E-04	1.41E-04	6.40975E-08	7.41869E-07
Cr^{+3}	0.00E+00	0.00E+00	0.00E+00	5.95E-06	5.95E-06	2.7068E-09	3.13288E-08
Cu^{+2}	0.00E+00	0.00E+00	0.00E+00	7.98E-08	7.98E-08	3.62524E-11	4.19588E-10
F^-	0.00E+00	0.00E+00	0.00E+00	1.48E-05	1.48E-05	6.72332E-09	7.78162E-08
Fe^{+3}	0.00E+00	0.00E+00	0.00E+00	4.28E-05	4.28E-05	1.94479E-08	2.25091E-07
H^+	0.00E+00	0.00E+00	0.00E+00		0.00E+00	0	0
H_2O	0.00E+00	0.00E+00	0.00E+00		0.00E+00	0	0
Hg^{+2}	0.00E+00	0.00E+00	0.00E+00	9.54E-08	9.54E-08	4.33642E-11	5.02E-10
K^+	0.00E+00	0.00E+00	0.00E+00	4.20E-05	4.20E-05	1.91024E-08	2.21092E-07
La^{+3}	0.00E+00	0.00E+00	0.00E+00	8.66E-08	8.66E-08	3.93594E-11	3.50133E-10
Li^+	0.00E+00	0.00E+00	0.00E+00	2.11E-05	2.11E-05	9.57296E-09	1.10796E-07
Mg^{+2}	0.00E+00	0.00E+00	0.00E+00	1.57E-05	1.57E-05	7.13382E-09	8.25673E-08
Mn^{+2}	0.00E+00	0.00E+00	0.00E+00	1.53E-06	1.53E-06	6.96281E-10	8.05881E-09
MnO_4^-	0.00E+00	0.00E+00	0.00E+00		0.00E+00	0	0
Na^+	0.00E+00	0.00E+00	0.00E+00	1.40E-04	1.40E-04	6.36663E-08	7.36875E-07
NH_4^+	0.00E+00	0.00E+00	0.00E+00	0.00E+00	0.00E+00	0	0
Ni^{+2}	0.00E+00	0.00E+00	0.00E+00	1.01E-06	1.01E-06	4.60857E-10	5.334E-09
NO_2^-	0.00E+00	0.00E+00	0.00E+00	5.09E-05	5.09E-05	2.31552E-08	2.67963E-07
NO_3^-	0.00E+00	0.00E+00	0.00E+00	7.63E-04	2.63E-04	1.19764E-07	1.38616E-06
O^{-2}				4.45E-04	4.45E-04	2.02069E-07	2.33876E-06
OH^-	0.00E+00	0.00E+00	0.00E+00	1.22E-04	1.22E-04	5.54439E-08	6.41712E-07
$OH(s)$	0.00E+00	0.00E+00	0.00E+00		0.00E+00	0	0
P^{-3}				1.64E-14	1.64E-14	7.45198E-18	8.62498E-17
Pb^{+2}	0.00E+00	0.00E+00	0.00E+00	8.01E-07	8.01E-07	3.64077E-10	4.21386E-09
Pd^{+2}	0.00E+00	0.00E+00	0.00E+00	4.83E-09	4.83E-09	2.19518E-12	2.54071E-11
PO_4^{-3}	0.00E+00	0.00E+00	0.00E+00	3.59E-05	3.59E-05	1.63278E-08	1.88979E-07
S^{+6}				5.41E-17	5.41E-17	2.46118E-20	2.84859E-19
S^{-2}				2.40E-04	2.40E-04	1.08997E-07	1.26154E-06
SiO_3^{-2}	0.00E+00	0.00E+00	0.00E+00		0.00E+00	0	0
SO_4^{-2}	0.00E+00	0.00E+00	0.00E+00	1.96E-05	1.96E-05	8.89912E-09	1.02999E-07
Sr^{+2}	0.00E+00	0.00E+00	0.00E+00	2.42E-08	2.42E-08	1.09949E-11	1.27258E-10
Ti^{+3}	0.00E+00	0.00E+00	0.00E+00	6.91E-06	6.91E-06	3.13875E-09	3.63281E-08
Zn^{+2}	0.00E+00	0.00E+00	0.00E+00	2.73E-05	2.73E-05	1.23998E-08	1.43516E-07

SUBJECT: Integrated Baseline Emissions Report Non-SSFM Represented Constituents Emissions Rate Estimation

Zr^{+4}	0.00E+00	0.00E+00	0.00E+00	2.47E-05	2.47E-05	1.12418E-08	1.30314E-07

Rad. Component	Aqueous Rad. Components			Solids Rad. Components (1)			Total Rad. Components (1)		
	Ci/L	Ci/day	Lb/day	Ci/L	Ci/day	Lb/day	Ci/L	Ci/day	Lb/day
Total	0.00E+00	0.00E+00	0.00E+00	1.29E-11	7.64E-05	2.83E-06	1.29E-11	7.64E-05	2.83E-06
^{241}Am	0	0.00E+00	0.00E+00	4.38E-15	2.61E-08	1.68E-11	4.38E-15	2.61E-08	1.68E-11
^{14}C	0.00E+00	0.00E+00	0.00E+00	3.08E-15	1.83E-08	9.03E-12	3.08E-15	1.83E-08	9.03E-12
^{36}Cl	0.00E+00	0.00E+00	0.00E+00	4.37E-15	2.60E-08	5.06E-14	4.37E-15	2.60E-08	5.06E-14
^{243}Cm	0.00E+00	0.00E+00	0.00E+00	1.17E-17	6.97E-11	3.04E-15	1.17E-17	6.97E-11	3.04E-15
^{244}Cm	0.00E+00	0.00E+00	0.00E+00	1.26E-17	7.48E-11	2.04E-15	1.26E-17	7.48E-11	2.04E-15
^{137}Cs	0.00E+00	0.00E+00	0.00E+00	4.68E-14	2.78E-07	7.06E-12	4.68E-14	2.78E-07	7.06E-12
^{59}Ni	0.00E+00	0.00E+00	0.00E+00	1.53E-14	9.08E-08	1.75E-12	1.53E-14	9.08E-08	1.75E-12
^{93}Nb	0.00E+00	0.00E+00	0.00E+00	5.07E-14	3.01E-07	2.46E-12	5.07E-14	3.01E-07	2.46E-12
^{99}Tc	0.00E+00	0.00E+00	0.00E+00	8.72E-14	5.18E-07	2.35E-12	8.72E-14	5.18E-07	2.35E-12
^{3}H	0.00E+00	0.00E+00	0.00E+00	1.51E-15	8.99E-09	2.06E-15	1.51E-15	8.99E-09	2.06E-15
^{129}I	0.00E+00	0.00E+00	0.00E+00	3.94E-17	2.34E-10	2.92E-09	3.94E-17	2.34E-10	2.92E-09
^{41}Nb	0.00E+00	0.00E+00	0.00E+00	2.80E-14	1.66E-07	6.46E-12	2.80E-14	1.66E-07	6.46E-12
^{93m}Nb	0.00E+00	0.00E+00	0.00E+00	9.43E-18	5.60E-11	1.75E-10	9.43E-18	5.60E-11	1.75E-10
^{95}Nb	0.00E+00	0.00E+00	0.00E+00	2.54E-17	1.51E-10	1.94E-14	2.54E-17	1.51E-10	1.94E-14
^{59}Ni	0.00E+00	0.00E+00	0.00E+00	2.97E-16	1.77E-09	6.27E-11	2.97E-16	1.77E-09	6.27E-11
^{94}Nb	0.00E+00	0.00E+00	0.00E+00	5.12E-17	3.04E-10	2.96E-12	5.12E-17	3.04E-10	2.96E-12
^{94}Nb	0.00E+00	0.00E+00	0.00E+00	1.27E-15	7.53E-09	1.61E-13	1.27E-15	7.53E-09	1.61E-13
^{125}Sb	0.00E+00	0.00E+00	0.00E+00	2.35E-13	1.39E-06	2.94E-12	2.35E-13	1.39E-06	2.94E-12
^{151}Sm	0.00E+00	0.00E+00	0.00E+00	2.90E-12	1.72E-05	1.44E-09	2.90E-12	1.72E-05	1.44E-09
^{126}Sn	0.00E+00	0.00E+00	0.00E+00	1.75E-15	1.04E-08	2.02E-09	1.75E-15	1.04E-08	2.02E-09
^{90}Sr	0.00E+00	0.00E+00	0.00E+00	9.47E-12	5.63E-05	8.98E-10	9.47E-12	5.63E-05	8.98E-10
^{99}Tc	0.00E+00	0.00E+00	0.00E+00	3.78E-15	2.25E-08	2.92E-09	3.78E-15	2.25E-08	2.92E-09
^{232}Th	0.00E+00	0.00E+00	0.00E+00	6.49E-18	3.86E-11	7.73E-07	6.49E-18	3.86E-11	7.73E-07
^{233}U	0.00E+00	0.00E+00	0.00E+00	1.20E-16	7.16E-10	1.64E-10	1.20E-16	7.16E-10	1.64E-10
^{234}U	0.00E+00	0.00E+00	0.00E+00	7.01E-17	4.17E-10	1.48E-10	7.01E-17	4.17E-10	1.48E-10
^{235}U	0.00E+00	0.00E+00	0.00E+00	2.71E-18	1.61E-11	1.64E-08	2.71E-18	1.61E-11	1.64E-08
^{236}U	0.00E+00	0.00E+00	0.00E+00	8.11E-18	4.82E-11	1.64E-09	8.11E-18	4.82E-11	1.64E-09
^{238}U	0.00E+00	0.00E+00	0.00E+00	5.21E-17	3.10E-10	2.03E-06	5.21E-17	3.10E-10	2.03E-06

Table A-17 RLD34 Stream Report

Stream Number: RLD34
Stream Name: LAW C3/C5 drain/sump collection vessel vent
Configuration: 0
0
Run Date File: H:\Working Folder 2 (John)\MRQ_03_002_run2a_Streams.csv
Run Date / Time: 1/16/2003 - 1:27:28 PM

Read this note for program instructions.

Stream Properties		
Variable	Value	Units
Density	1.13E-03	g/cm³
Enthalpy	-3.83E+03	BTU/hr
Mass Flow	2.48E+00	Lb/hr
	5.96E+01	Lb/day
Volumetric Flow	4.40E+00	GPM
Molar Flow	8.75E-02	Lbmol/hr
Volumetric Flow	5.89E-01	ft³/min
Molecular Weight	2.84E+01	Lb/Lbmol
Pressure	1.00E+03	mbar
Temperature	3.00E+01	C
Viscosity	1.84E-02	cP
Na Molarity	0.00E+00	mol/L
pH	#N/A	pH
Total TRU	8.45E-17	Ci/L
Total Activity	5.01E-13	Ci/L

Gaseous Components (1)			
Component	mol/L	Lb/day	Mt/day
CO	2.31E-27	3.42E-24	1.5567E-27
CO_2	3.48E-12	8.11E-09	3.68832E-12
H_2O	1.61E-03	1.61E+00	0.00073358
NO	0.00E+00	0.00E+00	0
NO_2	0.00E+00	0.00E+00	0
N_2	3.00E-02	4.45E+01	0.020230206
O_2	7.98E-03	1.35E+01	0.006142698
SO_2	0.00E+00	0.00E+00	0
NH_3	1.91E-13	1.72E-10	7.82101E-14
HNO_3	1.92E-35	6.42E-22	2.9161E-25
HCl	0.00E+00	0.00E+00	0
HF	0.00E+00	0.00E+00	0

(1) All radionuclides in gaseous streams are assumed to exist as solid particulate.

Component	Aqueous Components mol/L	Lb/gal	Lb/day	Solid Components Lb/day	Total Component Lb/day	mt/day	g/sec
Total	0.00E+00	0.00E+00	0.00E+00	5.71E-06	5.71E-06	2.59488E-09	3.00333E-08
Ag^+	0.00E+00	0.00E+00	0.00E+00	6.91E-10	6.91E-10	3.14095E-13	3.63536E-12
Al^{+3}	0.00E+00	0.00E+00	0.00E+00	7.79E-09	7.79E-09	3.54283E-12	4.1005E-11
As^{+3}	0.00E+00	0.00E+00	0.00E+00	3.37E-06	3.37E-06	1.53335E-09	1.77471E-08
B^{+3}	0.00E+00	0.00E+00	0.00E+00	3.59E-08	3.59E-08	1.6296E-11	1.8861E-10
Ba^{+2}	0.00E+00	0.00E+00	0.00E+00	3.97E-12	3.97E-12	1.80303E-15	2.08684E-14
Bi^{+3}	0.00E+00	0.00E+00	0.00E+00	4.49E-10	4.49E-10	2.04085E-13	2.36209E-12
$C_2O_4^{-2}$	0.00E+00	0.00E+00	0.00E+00	0.00E+00	0.00E+00	0	0
Ca^{+2}	0.00E+00	0.00E+00	0.00E+00	2.85E-08	2.85E-08	1.2968E-11	1.50093E-10
Cd^{+2}	0.00E+00	0.00E+00	0.00E+00	8.72E-08	8.72E-08	3.96309E-11	4.58691E-10
Ce^{+3}	0.00E+00	0.00E+00	0.00E+00	3.74E-11	3.74E-11	1.7011E-14	1.96887E-13
Cl^-	0.00E+00	0.00E+00	0.00E+00	5.67E-07	5.67E-07	2.57859E-10	2.98448E-09
CO_3^{-2}	0.00E+00	0.00E+00	0.00E+00	1.28E-08	1.28E-08	5.80978E-12	6.72428E-11
Cr^{+3}	0.00E+00	0.00E+00	0.00E+00	8.03E-09	8.03E-09	3.64888E-12	4.22324E-11
Cu^{+2}	0.00E+00	0.00E+00	0.00E+00	6.65E-11	6.65E-11	3.02103E-14	3.49657E-13
F^-	0.00E+00	0.00E+00	0.00E+00	1.91E-07	1.91E-07	8.66466E-11	1.00285E-09
Fe^{+3}	0.00E+00	0.00E+00	0.00E+00	4.63E-09	4.63E-09	2.09572E-12	2.4256E-11
H^+	0.00E+00	0.00E+00	0.00E+00		0.00E+00	0	0
H_2O	0.00E+00	0.00E+00	0.00E+00		0.00E+00	0	0
Hg^{+2}	0.00E+00	0.00E+00	0.00E+00	0.00E+00	0.00E+00	0	0
K^+	0.00E+00	0.00E+00	0.00E+00	6.08E-07	6.08E-07	2.76235E-10	3.19717E-09
La^{+3}	0.00E+00	0.00E+00	0.00E+00	8.64E-12	8.64E-12	3.92876E-15	4.5471E-14
Li^+	0.00E+00	0.00E+00	0.00E+00	9.65E-08	9.65E-08	4.38487E-11	5.07508E-10
Mg^{+2}	0.00E+00	0.00E+00	0.00E+00	3.49E-09	3.49E-09	1.58471E-12	1.83416E-11
Mn^{+2}	0.00E+00	0.00E+00	0.00E+00	3.06E-10	3.06E-10	1.39256E-13	1.61176E-12
MnO_4^-	0.00E+00	0.00E+00	0.00E+00		0.00E+00	0	0
Na^+	0.00E+00	0.00E+00	0.00E+00	2.56E-07	2.56E-07	1.16313E-10	1.34622E-09
NH_4^+	0.00E+00	0.00E+00	0.00E+00	0.00E+00	0.00E+00	0	0
Ni^{+2}	0.00E+00	0.00E+00	0.00E+00	9.17E-10	9.17E-10	4.16887E-13	4.82508E-12
NO_2^-	0.00E+00	0.00E+00	0.00E+00	0.00E+00	0.00E+00	0	0
NO_3^-	0.00E+00	0.00E+00	0.00E+00	0.00E+00	0.00E+00	0	0
O^{-2}				1.51E-07	1.51E-07	6.8666E-11	7.94745E-10
OH^-	0.00E+00	0.00E+00	0.00E+00	3.62E-09	3.62E-09	1.64657E-12	1.90575E-11
OH(b)	0.00E+00	0.00E+00	0.00E+00		0.00E+00	0	0
P^{-3}				0.00E+00	0.00E+00	0	0
Pb^{+2}	0.00E+00	0.00E+00	0.00E+00	8.42E-10	8.42E-10	3.82545E-13	4.4276E-12
Pd^{+2}	0.00E+00	0.00E+00	0.00E+00	2.72E-13	2.72E-13	1.23479E-16	1.42975E-15
PO_4^{-3}	0.00E+00	0.00E+00	0.00E+00	0.00E+00	0.00E+00	0	0
S^{+6}				0.00E+00	0.00E+00	0	0
Si^{+4}				2.39E-08	2.39E-08	1.08452E-11	1.25523E-10
SiO_4^{-4}	0.00E+00	0.00E+00	0.00E+00		0.00E+00	0	0
SO_4^{-2}	0.00E+00	0.00E+00	0.00E+00	0.00E+00	0.00E+00	0	0
Sr^{+2}	0.00E+00	0.00E+00	0.00E+00	2.72E-12	2.72E-12	1.23692E-15	1.43162E-14
Ti^{+4}	0.00E+00	0.00E+00	0.00E+00	2.33E-07	2.33E-07	1.05698E-10	1.22335E-09
Zn^{+2}	0.00E+00	0.00E+00	0.00E+00	1.22E-08	1.22E-08	5.56546E-12	6.4415E-11

SUBJECT: Integrated Baseline Emissions Report Non-SST/M Represented Constituents Emissions Rate Estimator

Zr^{4+}	0.00E+00	0.00E+00	0.00E+00	2.46E-09	2.46E-09	1.13626E-12	1.25196E-11

Rad. Component	Aqueous Rad. Components			Solids Rad. Components (1)			Total Rad. Components (1)		
	Ci/L	Ci/day	Lb/day	Ci/L	Ci/day	Lb/day	Ci/L	Ci/day	Lb/day
Total	0.00E+00	0.00E+00	0.00E+00	5.01E-13	1.20E-08	2.79E-10	5.01E-13	1.20E-08	2.79E-10
^{241}Am	0	0.00E+00	0.00E+00	6.13E-17	1.47E-12	9.43E-16	6.13E-17	1.47E-12	9.43E-16
^{14}C	0.00E+00	0.00E+00	0.00E+00	0.00E+00	0.00E+00	0.00E+00	0.00E+00	0.00E+00	0.00E+00
^{60}Co	0.00E+00	0.00E+00	0.00E+00	8.03E-16	1.93E-11	3.75E-17	8.03E-16	1.93E-11	3.75E-17
^{243}Cm	0.00E+00	0.00E+00	0.00E+00	1.63E-19	3.92E-15	1.71E-19	1.63E-19	3.92E-15	1.71E-19
^{244}Cm	0.00E+00	0.00E+00	0.00E+00	1.75E-19	4.21E-15	1.15E-19	1.75E-19	4.21E-15	1.15E-19
^{51}Cr	0.00E+00	0.00E+00	0.00E+00	7.78E-14	1.87E-09	4.74E-14	7.78E-14	1.87E-09	4.74E-14
^{60}Fe	0.00E+00	0.00E+00	0.00E+00	2.13E-16	5.10E-12	6.48E-17	2.13E-16	5.10E-12	6.48E-17
^{90}Sr	0.00E+00	0.00E+00	0.00E+00	7.05E-16	1.69E-11	1.38E-16	7.05E-16	1.69E-11	1.38E-16
^{99}Tc	0.00E+00	0.00E+00	0.00E+00	1.21E-15	2.91E-11	1.32E-16	1.21E-15	2.91E-11	1.32E-16
^{3}H	0.00E+00	0.00E+00	0.00E+00	7.52E-16	1.80E-11	4.14E-18	7.52E-16	1.80E-11	4.14E-18
^{129}I	0.00E+00	0.00E+00	0.00E+00	0.00E+00	0.00E+00	0.00E+00	0.00E+00	0.00E+00	0.00E+00
^{63}Ni	0.00E+00	0.00E+00	0.00E+00	6.27E-15	1.50E-10	5.84E-15	6.27E-15	1.50E-10	5.84E-15
^{237}Np	0.00E+00	0.00E+00	0.00E+00	2.63E-19	6.30E-15	1.97E-14	2.63E-19	6.30E-15	1.97E-14
^{238}Pu	0.00E+00	0.00E+00	0.00E+00	3.54E-19	8.50E-15	1.09E-18	3.54E-19	8.50E-15	1.09E-18
^{239}Pu	0.00E+00	0.00E+00	0.00E+00	4.14E-18	9.93E-14	3.53E-15	4.14E-18	9.93E-14	3.53E-15
^{240}Pu	0.00E+00	0.00E+00	0.00E+00	7.13E-19	1.71E-14	1.66E-16	7.13E-19	1.71E-14	1.66E-16
^{241}Pu	0.00E+00	0.00E+00	0.00E+00	1.77E-17	4.24E-13	9.07E-18	1.77E-17	4.24E-13	9.07E-18
^{126}Sb	0.00E+00	0.00E+00	0.00E+00	7.13E-14	1.71E-09	3.64E-15	7.13E-14	1.71E-09	3.64E-15
^{151}Sm	0.00E+00	0.00E+00	0.00E+00	4.04E-14	9.69E-10	8.13E-14	4.04E-14	9.69E-10	8.13E-14
^{126}Sn	0.00E+00	0.00E+00	0.00E+00	2.44E-17	5.86E-13	1.14E-13	2.44E-17	5.86E-13	1.14E-13
^{90}Sr	0.00E+00	0.00E+00	0.00E+00	2.64E-13	6.33E-09	1.01E-13	2.64E-13	6.33E-09	1.01E-13
^{99}Tc	0.00E+00	0.00E+00	0.00E+00	3.80E-14	9.12E-10	1.19E-10	3.80E-14	9.12E-10	1.19E-10
^{232}Th	0.00E+00	0.00E+00	0.00E+00	9.04E-20	2.17E-15	4.35E-11	9.04E-20	2.17E-15	4.35E-11
^{233}U	0.00E+00	0.00E+00	0.00E+00	1.68E-18	4.03E-14	9.21E-15	1.68E-18	4.03E-14	9.21E-15
^{234}U	0.00E+00	0.00E+00	0.00E+00	9.76E-19	2.34E-14	8.32E-15	9.76E-19	2.34E-14	8.32E-15
^{235}U	0.00E+00	0.00E+00	0.00E+00	3.77E-20	9.05E-16	9.23E-13	3.77E-20	9.05E-16	9.23E-13
^{236}U	0.00E+00	0.00E+00	0.00E+00	1.13E-19	2.71E-15	9.24E-14	1.13E-19	2.71E-15	9.24E-14
^{238}U	0.00E+00	0.00E+00	0.00E+00	7.26E-19	1.74E-14	1.14E-10	7.26E-19	1.74E-14	1.14E-10

Table A-18 RLD33 Stream Report

Stream Number:	RLD33
Stream Name:	LAW Plant wash vessel vent
Configuration:	0
	0
Run Data File:	H:\Working Folder 2 (jaks)\MRQ_03_002_run2a_Streams.csv
Run Date / Time:	1/16/2003 - 1:27:28 PM

Read this note for program instructions.

Stream Properties Variable	Value	Units
Density	1.13E-03	g/cm³
Enthalpy	-3.83E-02	BTU/hr
Mass Flow	2.48E-00	Lb/hr
	5.95E-01	Lb/day
Volumetric Flow	4.40E-00	GPM
Molar Flow	8.75E-02	Lbmol/hr
Volumetric Flow	5.89E-01	ft³/min
Molecular Weight	2.84E+01	Lb/Lbmol
Pressure	1.00E+03	mbar
Temperature	3.00E+01	C
Viscosity	1.84E-02	cP
Na Molarity	0.00E+00	mol/L
pH	8.7A1M	pH
Total TRU	0.00E+00	Ci/L
Total Activity	0.00E+00	Ci/L

Gaseous Components (1) Component	mol/L	Lb/day	Mt/day
CO	0.00E+00	0.00E+00	0
CO_2	0.00E+00	0.00E+00	0
H_2O	1.69E-03	1.61E+00	0.00073358
NO	0.00E+00	0.00E+00	0
NO_2	0.00E+00	0.00E+00	0
N_2	3.00E-02	4.45E+01	0.020230206
O_2	7.98E-03	1.35E+01	0.006142698
SO_2	0.00E+00	0.00E+00	0
NH_3	0.00E+00	0.00E+00	0
HNO_3	0.00E+00	0.00E+00	0
HCl	0.00E+00	0.00E+00	0
HF	0.00E+00	0.00E+00	0

(1) All radionuclides in gaseous streams are assumed to exist as solid particulate.

Component	Aqueous Components mol/L	Lb/gal	Lb/day	Solid Components Lb/day	Total Component Lb/day	mt/day	g/sec
Total	0.00E+00	0.00E+00	0.00E+00	0.00E+00	0.00E+00	0	0
Ag^+	0.00E+00	0.00E+00	0.00E+00	0.00E+00	0.00E+00	0	0
Al^{+3}	0.00E+00	0.00E+00	0.00E+00	0.00E+00	0.00E+00	0	0
As^{+3}	0.00E+00	0.00E+00	0.00E+00	0.00E+00	0.00E+00	0	0
B^{+3}	0.00E+00	0.00E+00	0.00E+00	0.00E+00	0.00E+00	0	0
Ba^{+2}	0.00E+00	0.00E+00	0.00E+00	0.00E+00	0.00E+00	0	0
Bi^{+3}	0.00E+00	0.00E+00	0.00E+00	0.00E+00	0.00E+00	0	0
$C_2O_4^{-2}$	0.00E+00	0.00E+00	0.00E+00	0.00E+00	0.00E+00	0	0
Ca^{+2}	0.00E+00	0.00E+00	0.00E+00	0.00E+00	0.00E+00	0	0
Cd^{+2}	0.00E+00	0.00E+00	0.00E+00	0.00E+00	0.00E+00	0	0
Ce^{+3}	0.00E+00	0.00E+00	0.00E+00	0.00E+00	0.00E+00	0	0
Cl^-	0.00E+00	0.00E+00	0.00E+00	0.00E+00	0.00E+00	0	0
CO_3^{-2}	0.00E+00	0.00E+00	0.00E+00	0.00E+00	0.00E+00	0	0
Cr^{+3}	0.00E+00	0.00E+00	0.00E+00	0.00E+00	0.00E+00	0	0
Cu^{+2}	0.00E+00	0.00E+00	0.00E+00	0.00E+00	0.00E+00	0	0
F^-	0.00E+00	0.00E+00	0.00E+00	0.00E+00	0.00E+00	0	0
Fe^{+3}	0.00E+00	0.00E+00	0.00E+00	0.00E+00	0.00E+00	0	0
H^+	0.00E+00	0.00E+00	0.00E+00		0.00E+00	0	0
H_2O	0.00E+00	0.00E+00	0.00E+00		0.00E+00	0	0
Hg^{+2}	0.00E+00	0.00E+00	0.00E+00	0.00E+00	0.00E+00	0	0
K^+	0.00E+00	0.00E+00	0.00E+00	0.00E+00	0.00E+00	0	0
La^{+3}	0.00E+00	0.00E+00	0.00E+00	0.00E+00	0.00E+00	0	0
Li^+	0.00E+00	0.00E+00	0.00E+00	0.00E+00	0.00E+00	0	0
Mg^{+2}	0.00E+00	0.00E+00	0.00E+00	0.00E+00	0.00E+00	0	0
Mn^{+2}	0.00E+00	0.00E+00	0.00E+00	0.00E+00	0.00E+00	0	0
MnO_4^-	0.00E+00	0.00E+00	0.00E+00		0.00E+00	0	0
Na^+	0.00E+00	0.00E+00	0.00E+00	0.00E+00	0.00E+00	0	0
NH_4^+	0.00E+00	0.00E+00	0.00E+00	0.00E+00	0.00E+00	0	0
Ni^{+2}	0.00E+00	0.00E+00	0.00E+00	0.00E+00	0.00E+00	0	0
NO_2^-	0.00E+00	0.00E+00	0.00E+00	0.00E+00	0.00E+00	0	0
NO_3^-	0.00E+00	0.00E+00	0.00E+00	0.00E+00	0.00E+00	0	0
O^{-2}				0.00E+00	0.00E+00	0	0
OH^-	0.00E+00	0.00E+00	0.00E+00	0.00E+00	0.00E+00	0	0
$OH(b)^-$	0.00E+00	0.00E+00	0.00E+00		0.00E+00	0	0
P^{+5}				0.00E+00	0.00E+00	0	0
Pb^{+2}	0.00E+00	0.00E+00	0.00E+00	0.00E+00	0.00E+00	0	0
Pd^{+2}	0.00E+00	0.00E+00	0.00E+00	0.00E+00	0.00E+00	0	0
PO_4^{-3}	0.00E+00	0.00E+00	0.00E+00	0.00E+00	0.00E+00	0	0
S^{+4}				0.00E+00	0.00E+00	0	0
Si^{+4}				0.00E+00	0.00E+00	0	0
SiO_4^{-4}	0.00E+00	0.00E+00	0.00E+00		0.00E+00	0	0
SO_4^{-2}	0.00E+00	0.00E+00	0.00E+00	0.00E+00	0.00E+00	0	0
Sr^{+2}	0.00E+00	0.00E+00	0.00E+00	0.00E+00	0.00E+00	0	0
Ti^{+4}	0.00E+00	0.00E+00	0.00E+00	0.00E+00	0.00E+00	0	0
Zn^{+2}	0.00E+00	0.00E+00	0.00E+00	0.00E+00	0.00E+00	0	0

Zr^{+4}	0.00E+00	0.00E+00	0.00E+00	0.00E+00	0.00E+00	0	0

Rad. Component	Aqueous Rad. Components			Solids Rad. Components (1)			Total Rad. Components (1)		
	Ci/L	Ci/day	Lb/day	Ci/L	Ci/day	Lb/day	Ci/L	Ci/day	Lb/day
Total	0.00E+00	0.00E+00	0.00E+00	0.00E+00	0.00E+00	0.00E+00	0.00E+00	0.00E+00	0.00E+00
^{241}Am	0	0.00E+00	0.00E+00	0.00E+00	0.00E+00	0.00E+00	0.00E+00	0.00E+00	0.00E+00
^{14}C	0.00E+00	0.00E+00	0.00E+00	0.00E+00	0.00E+00	0.00E+00	0.00E+00	0.00E+00	0.00E+00
^{60}Co	0.00E+00	0.00E+00	0.00E+00	0.00E+00	0.00E+00	0.00E+00	0.00E+00	0.00E+00	0.00E+00
^{243}Cm	0.00E+00	0.00E+00	0.00E+00	0.00E+00	0.00E+00	0.00E+00	0.00E+00	0.00E+00	0.00E+00
^{244}Cm	0.00E+00	0.00E+00	0.00E+00	0.00E+00	0.00E+00	0.00E+00	0.00E+00	0.00E+00	0.00E+00
^{137}Cs	0.00E+00	0.00E+00	0.00E+00	0.00E+00	0.00E+00	0.00E+00	0.00E+00	0.00E+00	0.00E+00
^{152}Eu	0.00E+00	0.00E+00	0.00E+00	0.00E+00	0.00E+00	0.00E+00	0.00E+00	0.00E+00	0.00E+00
^{154}Eu	0.00E+00	0.00E+00	0.00E+00	0.00E+00	0.00E+00	0.00E+00	0.00E+00	0.00E+00	0.00E+00
^{155}Eu	0.00E+00	0.00E+00	0.00E+00	0.00E+00	0.00E+00	0.00E+00	0.00E+00	0.00E+00	0.00E+00
^{3}H	0.00E+00	0.00E+00	0.00E+00	0.00E+00	0.00E+00	0.00E+00	0.00E+00	0.00E+00	0.00E+00
^{129}I	0.00E+00	0.00E+00	0.00E+00	0.00E+00	0.00E+00	0.00E+00	0.00E+00	0.00E+00	0.00E+00
^{93}Nb	0.00E+00	0.00E+00	0.00E+00	0.00E+00	0.00E+00	0.00E+00	0.00E+00	0.00E+00	0.00E+00
^{237}Np	0.00E+00	0.00E+00	0.00E+00	0.00E+00	0.00E+00	0.00E+00	0.00E+00	0.00E+00	0.00E+00
^{238}Pu	0.00E+00	0.00E+00	0.00E+00	0.00E+00	0.00E+00	0.00E+00	0.00E+00	0.00E+00	0.00E+00
^{239}Pu	0.00E+00	0.00E+00	0.00E+00	0.00E+00	0.00E+00	0.00E+00	0.00E+00	0.00E+00	0.00E+00
^{240}Pu	0.00E+00	0.00E+00	0.00E+00	0.00E+00	0.00E+00	0.00E+00	0.00E+00	0.00E+00	0.00E+00
^{241}Pu	0.00E+00	0.00E+00	0.00E+00	0.00E+00	0.00E+00	0.00E+00	0.00E+00	0.00E+00	0.00E+00
^{125}Sb	0.00E+00	0.00E+00	0.00E+00	0.00E+00	0.00E+00	0.00E+00	0.00E+00	0.00E+00	0.00E+00
^{151}Sm	0.00E+00	0.00E+00	0.00E+00	0.00E+00	0.00E+00	0.00E+00	0.00E+00	0.00E+00	0.00E+00
^{126}Sn	0.00E+00	0.00E+00	0.00E+00	0.00E+00	0.00E+00	0.00E+00	0.00E+00	0.00E+00	0.00E+00
^{90}Sr	0.00E+00	0.00E+00	0.00E+00	0.00E+00	0.00E+00	0.00E+00	0.00E+00	0.00E+00	0.00E+00
^{99}Tc	0.00E+00	0.00E+00	0.00E+00	0.00E+00	0.00E+00	0.00E+00	0.00E+00	0.00E+00	0.00E+00
^{232}Th	0.00E+00	0.00E+00	0.00E+00	0.00E+00	0.00E+00	0.00E+00	0.00E+00	0.00E+00	0.00E+00
^{233}U	0.00E+00	0.00E+00	0.00E+00	0.00E+00	0.00E+00	0.00E+00	0.00E+00	0.00E+00	0.00E+00
^{234}U	0.00E+00	0.00E+00	0.00E+00	0.00E+00	0.00E+00	0.00E+00	0.00E+00	0.00E+00	0.00E+00
^{235}U	0.00E+00	0.00E+00	0.00E+00	0.00E+00	0.00E+00	0.00E+00	0.00E+00	0.00E+00	0.00E+00
^{236}U	0.00E+00	0.00E+00	0.00E+00	0.00E+00	0.00E+00	0.00E+00	0.00E+00	0.00E+00	0.00E+00
^{238}U	0.00E+00	0.00E+00	0.00E+00	0.00E+00	0.00E+00	0.00E+00	0.00E+00	0.00E+00	0.00E+00

Table A-19 RLD32 Stream Report

Stream Number: RLD32
Stream Name: LAW SBS condensate vessel vent
Configuration: 0
0
Run Data File: H:\Working Folder 2 (jake)\MRQ_03_002_run2a_Streams.csv
Run Data / Time: 1/16/2003 - 1:27:28 PM

Read this note for program instructions.

Stream Properties Variable	Value	Units
Density	1.13E-03	g/cm³
Enthalpy	-1.44E+04	BTU/hr
Mass Flow	9.34E+01	Lb/hr
	2.24E+03	Lb/day
Volumetric Flow	1.66E+02	GPM
Molar Flow	3.29E+00	Lbmol/hr
Volumetric Flow	2.21E+01	ft³/min
Molecular Weight	2.84E+01	Lb/Lbmol
Pressure	1.00E+03	mbar
Temperature	3.00E+01	C
Viscosity	1.84E-02	cP
Na Molarity	0.00E+00	mol/L
pH	#NUM!	pH
Total TBU	9.97E-17	Ci/L
Total Activity	3.83E-13	Ci/L

Gaseous Components (1) Component	mol/L	Lb/day	Mt/day
CO	6.15E-29	3.42E-24	1.55676E-27
CO_2	2.68E-13	2.34E-08	1.06509E-11
H_2O	1.69E-03	6.07E-01	0.027582625
NO	0.00E+00	0.00E+00	0
NO_2	0.00E+00	0.00E+00	0
N_2	3.00E-02	1.67E+03	0.756455748
O_2	7.98E-03	5.08E+02	0.230965432
SO_2	0.00E+00	0.00E+00	0
NH_3	1.73E-13	5.85E-09	2.65915E-12
HNO_3	4.91E-36	6.15E-21	2.79689E-24
HCl	0.00E+00	0.00E+00	0
HF	0.00E+00	0.00E+00	0

(1) All radionuclides in gaseous streams are assumed to exist as solid particulate.

Component	Aqueous Components mol/L	Lb/gal	Lb/day	Solid Components Lb/day	Total Component Lb/day	mt/day	g/sec
Total	0.00E+00	0.00E+00	0.00E+00	3.81E-05	3.81E-05	1.73188E-08	2.00449E-07
Ag^+	0.00E+00	0.00E+00	0.00E+00	1.26E-09	1.26E-09	5.70499E-13	6.603E-12
Al^{+3}	0.00E+00	0.00E+00	0.00E+00	3.46E-07	3.46E-07	1.57065E-10	1.81789E-09
As^{+3}	0.00E+00	0.00E+00	0.00E+00	1.69E-05	1.69E-05	7.66675E-09	8.87355E-08
B^{+3}	0.00E+00	0.00E+00	0.00E+00	1.19E-06	1.19E-06	5.41389E-10	6.26607E-09
Ba^{+2}	0.00E+00	0.00E+00	0.00E+00	3.92E-10	3.92E-10	1.78832E-13	2.06389E-12
Bi^{+3}	0.00E+00	0.00E+00	0.00E+00	1.19E-09	1.19E-09	5.41881E-13	6.27177E-12
$C_2O_4^{-2}$	0.00E+00	0.00E+00	0.00E+00	0.00E+00	0.00E+00	0	0
Ca^{+2}	0.00E+00	0.00E+00	6.31E-07	6.31E-07	6.31E-07	2.86738E-10	3.31872E-09
Cd^{+2}	0.00E+00	0.00E+00	1.40E-07	1.40E-07	1.40E-07	6.37105E-11	7.3739E-10
Ce^{+3}	0.00E+00	0.00E+00	1.66E-09	1.66E-09	1.66E-09	7.54156E-13	8.72866E-12
Cl^-	0.00E+00	0.00E+00	1.34E-06	1.34E-06	1.34E-06	6.0825E-10	7.03993E-09
CO_3^{-2}	0.00E+00	0.00E+00	1.28E-08	1.28E-08	1.28E-08	5.80978E-12	6.72428E-11
Cr^{+3}	0.00E+00	0.00E+00	2.90E-08	2.90E-08	2.90E-08	1.32023E-11	1.52804E-10
Cu^{+2}	0.00E+00	0.00E+00	1.97E-10	1.97E-10	1.97E-10	8.95893E-14	1.03691E-12
F^-	0.00E+00	0.00E+00	1.69E-06	1.69E-06	1.69E-06	7.68733E-10	8.89738E-09
Fe^{+3}	0.00E+00	0.00E+00	2.04E-07	2.04E-07	2.04E-07	9.29102E-11	1.07535E-09
H^+	0.00E+00	0.00E+00	0.00E+00		0.00E+00	0	0
H_2O	0.00E+00	0.00E+00	0.00E+00		0.00E+00	0	0
Hg^{+2}	0.00E+00	0.00E+00	0.00E+00	3.98E-08	3.98E-08	1.80684E-11	2.09125E-10
K^+	0.00E+00	0.00E+00	0.00E+00	1.04E-06	1.04E-06	4.72877E-10	5.47311E-09
La^{+3}	0.00E+00	0.00E+00	0.00E+00	6.65E-10	6.65E-10	3.02122E-13	3.49678E-12
Li^+	0.00E+00	0.00E+00	0.00E+00	2.05E-07	2.05E-07	9.33191E-11	1.08008E-09
Mg^{+2}	0.00E+00	0.00E+00	0.00E+00	7.71E-08	7.71E-08	3.50398E-11	4.05853E-10
Mn^{+2}	0.00E+00	0.00E+00	0.00E+00	1.02E-08	1.02E-08	4.6264E-12	5.35463E-11
MnO_4^-	0.00E+00	0.00E+00	0.00E+00		0.00E+00	0	0
Na^+	0.00E+00	0.00E+00	0.00E+00	6.87E-07	6.87E-07	3.1221E-10	3.61354E-09
NaH_2^+	0.00E+00	0.00E+00	0.00E+00	0.00E+00	0.00E+00	0	0
Ni^{+2}	0.00E+00	0.00E+00	0.00E+00	5.65E-09	5.65E-09	2.56714E-12	2.97123E-11
NO_2^-	0.00E+00	0.00E+00	0.00E+00	0.00E+00	0.00E+00	0	0
NO_3^-	0.00E+00	0.00E+00	0.00E+00	0.00E+00	0.00E+00	0	0
O^{-2}				1.11E-05	1.11E-05	5.05883E-09	5.85513E-08
OH^-	0.00E+00	0.00E+00	0.00E+00	0.00E+00	0.00E+00	0	0
$OH(b)^-$	0.00E+00	0.00E+00	0.00E+00		0.00E+00	0	0
p^{+4}				0.00E+00	0.00E+00	0	0
Pb^{+2}	0.00E+00	0.00E+00	0.00E+00	1.97E-09	1.97E-09	8.97002E-13	1.0382E-11
Pd^{+2}	0.00E+00	0.00E+00	0.00E+00	1.20E-11	1.20E-11	5.47422E-15	6.3359E-14
PO_4^{-3}	0.00E+00	0.00E+00	0.00E+00	0.00E+00	0.00E+00	0	0
S^{-2}				0.00E+00	0.00E+00	0	0
Sr^{+2}				7.93E-07	7.93E-07	3.60301E-10	4.17015E-09
SiO_4^{-4}	0.00E+00	0.00E+00	0.00E+00		0.00E+00	0	0
SO_4^{-2}	0.00E+00	0.00E+00	0.00E+00	0.00E+00	0.00E+00	0	0
Sr^{+2}	0.00E+00	0.00E+00	0.00E+00	1.21E-10	1.21E-10	5.48369E-14	6.34687E-13
Ti^{+4}	0.00E+00	0.00E+00	0.00E+00	1.31E-06	1.31E-06	5.94022E-10	6.87523E-09
Zn^{+2}	0.00E+00	0.00E+00	0.00E+00	2.68E-07	2.68E-07	1.21583E-10	1.41069E-09

Zr^{+4}	0.00E+00	0.00E+00	0.00E+00	8.16E-08	8.16E-08	3.70845E-11	4.29219E-10

Rad. Component	Aqueous Rad. Components			Solids Rad. Components (1)			Total Rad. Components (1)		
	Ci/L	Ci/day	Lb/day	Ci/L	Ci/day	Lb/day	Ci/L	Ci/day	Lb/day
Total	0.00E+00	0.00E+00	0.00E+00	3.83E-13	3.45E-07	7.76E-09	3.83E-13	3.45E-07	7.76E-09
^{241}Am	0	0.00E+00	0.00E+00	7.20E-17	6.50E-11	4.18E-14	7.20E-17	6.50E-11	4.18E-14
^{14}C	0.00E+00	0.00E+00	0.00E+00	0.00E+00	0.00E+00	0.00E+00	0.00E+00	0.00E+00	0.00E+00
^{60}Co	0.00E+00	0.00E+00	0.00E+00	7.08E-17	6.39E-11	1.24E-16	7.08E-17	6.39E-11	1.24E-16
^{243}Cm	0.00E+00	0.00E+00	0.00E+00	1.93E-19	1.74E-13	7.58E-18	1.93E-19	1.74E-13	7.58E-18
^{244}Cm	0.00E+00	0.00E+00	0.00E+00	2.07E-19	1.86E-13	5.08E-18	2.07E-19	1.86E-13	5.08E-18
^{137}Cs	0.00E+00	0.00E+00	0.00E+00	5.06E-15	4.57E-09	1.16E-13	5.06E-15	4.57E-09	1.16E-13
^{152}Eu	0.00E+00	0.00E+00	0.00E+00	2.51E-16	2.26E-10	2.87E-15	2.51E-16	2.26E-10	2.87E-15
^{154}Eu	0.00E+00	0.00E+00	0.00E+00	8.32E-16	7.51E-10	6.12E-15	8.32E-16	7.51E-10	6.12E-15
^{155}Eu	0.00E+00	0.00E+00	0.00E+00	1.43E-15	1.29E-09	5.86E-15	1.43E-15	1.29E-09	5.86E-15
^{3}H	0.00E+00	0.00E+00	0.00E+00	3.44E-15	3.10E-09	7.12E-16	3.44E-15	3.10E-09	7.12E-16
^{129}I	0.00E+00	0.00E+00	0.00E+00	1.97E-17	1.77E-11	2.21E-10	1.97E-17	1.77E-11	2.21E-10
^{63}Ni	0.00E+00	0.00E+00	0.00E+00	1.03E-15	9.27E-10	3.60E-14	1.03E-15	9.27E-10	3.60E-14
^{237}Np	0.00E+00	0.00E+00	0.00E+00	3.10E-19	2.79E-13	8.74E-13	3.10E-19	2.79E-13	8.74E-13
^{238}Pu	0.00E+00	0.00E+00	0.00E+00	4.17E-19	3.77E-13	4.85E-17	4.17E-19	3.77E-13	4.85E-17
^{239}Pu	0.00E+00	0.00E+00	0.00E+00	4.88E-18	4.40E-12	1.56E-13	4.88E-18	4.40E-12	1.56E-13
^{240}Pu	0.00E+00	0.00E+00	0.00E+00	8.41E-19	7.59E-13	7.37E-15	8.41E-19	7.59E-13	7.37E-15
^{241}Pu	0.00E+00	0.00E+00	0.00E+00	2.08E-17	1.88E-11	4.02E-16	2.08E-17	1.88E-11	4.02E-16
^{125}Sb	0.00E+00	0.00E+00	0.00E+00	7.53E-15	6.80E-09	1.44E-14	7.53E-15	6.80E-09	1.44E-14
^{151}Sm	0.00E+00	0.00E+00	0.00E+00	4.76E-14	4.29E-08	3.60E-12	4.76E-14	4.29E-08	3.60E-12
^{126}Sn	0.00E+00	0.00E+00	0.00E+00	2.88E-17	2.60E-11	5.04E-12	2.88E-17	2.60E-11	5.04E-12
^{90}Sr	0.00E+00	0.00E+00	0.00E+00	3.11E-13	2.81E-07	4.48E-12	3.11E-13	2.81E-07	4.48E-12
^{99}Tc	0.00E+00	0.00E+00	0.00E+00	4.10E-15	3.70E-09	4.81E-10	4.10E-15	3.70E-09	4.81E-10
^{232}Th	0.00E+00	0.00E+00	0.00E+00	1.07E-19	9.62E-14	1.93E-09	1.07E-19	9.62E-14	1.93E-09
^{233}U	0.00E+00	0.00E+00	0.00E+00	1.98E-18	1.79E-12	4.09E-13	1.98E-18	1.79E-12	4.09E-13
^{234}U	0.00E+00	0.00E+00	0.00E+00	1.15E-18	1.04E-12	3.69E-13	1.15E-18	1.04E-12	3.69E-13
^{235}U	0.00E+00	0.00E+00	0.00E+00	4.44E-20	4.01E-14	4.09E-11	4.44E-20	4.01E-14	4.09E-11
^{236}U	0.00E+00	0.00E+00	0.00E+00	1.33E-19	1.20E-13	4.10E-12	1.33E-19	1.20E-13	4.10E-12
^{238}U	0.00E+00	0.00E+00	0.00E+00	8.56E-19	7.73E-13	5.07E-09	8.56E-19	7.73E-13	5.07E-09

Appendix B Calculations

SUBJECT: Integrated Baseline Emissions Report Non-SSFM Represented Constituents Emissions Rate Estimation

Table B-1 Feed Rate Calculation

LAW & HLW Supernate			Represent		FRP14
Non-Rep Const	MW	mol/mol Na	Compound	mol/l	mol/hr
Be	9.0	1.21E-04	Zr	4.84E-04	0.00E+00
CN	26.0	2.89E-04	PO4	1.16E-03	0.00E+00
Co	58.9	1.67E-04	60Co	6.68E-04	0.00E+00
Mo	95.9	2.67E-04	Bi	1.07E-03	0.00E+00
Rh	102.9	5.54E-05	Zr	2.22E-04	0.00E+00
Sb	121.7	1.07E-04	Sb-125	4.28E-04	0.00E+00
Se	78.9	2.04E-04	F	8.16E-04	0.00E+00
Sn	118.7	1.17E-06	Sn-126	4.68E-06	0.00E+00
Ta	180.9	2.95E-05	Zr	1.18E-04	0.00E+00
Tl	204.3	2.13E-04	F	8.52E-04	0.00E+00
U	238.0	6.18E-04	234U	2.47E-03	0.00E+00
V	50.9	2.14E-04	Bi	8.56E-04	0.00E+00
W	183.8	2.01E-04	Zr	8.04E-04	0.00E+00
Y	88.9	2.02E-05	Sr-90	8.08E-05	0.00E+00
		Bq/mol Na		Bq/l	Bq/hr
106Ru	106	7.78E-01	F	3.11E+00	0.00E+00
113mCd	113	8.26E+05	Cd	3.30E+06	0.00E+00
134Cs	134	3.70E+07	137Cs	1.48E+08	0.00E+00
137mBa	137	1.36E+10	137Cs	5.44E+10	0.00E+00
226Ra	226	1.19E+00	Zr	4.76E+00	0.00E+00
227Ac	227	1.32E+01	Zr	5.28E+01	0.00E+00
228Ra	228	2.31E+03	Zr	9.24E+03	0.00E+00
229Th	229	5.43E+01	232Th	2.17E+02	0.00E+00
231Pa	231	3.85E+01	Zr	1.54E+02	0.00E+00
232U	232	1.30E+03	233U	5.20E+03	0.00E+00
242Pu	242	2.79E-01	241Pu	1.12E+00	0.00E+00
243Am	243	7.29E+00	241Am	2.92E+01	0.00E+00
59Ni	59	1.29E+04	63Ni	5.16E+04	0.00E+00
79Se	79	1.13E+04	F	4.52E+04	0.00E+00
90Y	90	7.70E+08	90Sr	3.08E+09	0.00E+00
93Zr	93	1.92E+05	Zr	7.68E+05	0.00E+00
93mNb	93	1.52E+05	Zr	6.08E+05	0.00E+00
242Cm	242	4.49E+02	243Cm	1.80E+03	0.00E+00

LAW & HLW Solids			FRP14	Feed rates			
	mol/mol Na	mol/l	mol/hr				
Be	6.74E-03	3.50E-02	5.15E+01	Na mol	4 mol/l		
CN	7.45E-02	2.98E-01	4.39E+02	Vol Flow	0 ft3/hr	0 L/hr	FRP14
Co	9.25E-03	3.70E-02	5.45E+01	Total Flow	52 ft3/hr	1473 L/hr	FRP14
Mo	8.20E-03	3.28E-02	4.83E+01				
Rh	1.53E-03	6.12E-03	9.02E+00				
Sb	8.35E-03	3.34E-02	4.92E+01				
Se	7.97E-03	3.19E-02	4.70E+01				
Sn	5.28E-05	2.11E-04	3.11E-01				
Ta	2.01E-04	8.04E-04	1.18E+00				
Tl	2.67E-03	1.07E-02	1.57E+01				
U	7.12E-02	2.85E-01	4.20E+02				
V	7.61E-04	3.04E-03	4.48E+00				
W	1.58E-03	6.32E-03	9.31E+00				
Y	2.18E-03	8.72E-03	1.28E+01				
	Bq/mol Na	Bq/l	Bq/hr				
106Ru	4.37E+08	1.75E+07	2.57E+10				
113mCd	1.38E+07	5.44E+07	8.01E+10				
134Cs	3.15E+08	1.26E+07	1.86E+10				
137mBa	3.28E+09	1.31E+10	1.93E+13				
226Ra	1.52E+02	6.08E+02	8.96E+05				
227Ac	7.68E+05	3.07E+06	4.53E+09				
228Ra	1.59E+05	6.36E+05	9.37E+08				
229Th	6.63E+03	2.65E+04	3.91E+07				
231Pa	1.69E+06	6.76E+06	9.96E+09				
232U	1.38E+05	5.44E+05	8.01E+08				
242Pu	1.44E+03	5.76E+03	8.48E+06				
243Am	3.95E+04	1.58E+05	2.33E+08				
59Ni	2.27E+06	9.08E+06	1.34E+10				
79Se	1.26E+05	5.04E+05	7.42E+08				
90Y	3.71E+10	1.48E+11	2.19E+14				
93Zr	5.46E+06	2.18E+07	3.22E+10				
93mNb	4.92E+06	1.97E+07	2.90E+10				
242Cm	1.62E+05	6.48E+05	9.55E+08				

Tin Calc

126Sn	1.49E+05	Bq/mol Na LAW Feed	4.03E-06	Ci/mol Na
	6.72E+06	Bq/mol Na HLW Feed	1.82E-04	Ci/mol Na
	2.90E+01	Ci Sn/kg Sn		
	1.39E-07	kg/mol Na LAW		
	6.26E-06	kg/mol Na HLW		
	118.71	g/mol		
	1.17E-06	mol/mol Na LAW		
	5.28E-05	mol/mol Na HLW		

CALCULATION SHEET

BY: E. Berrios
DATE: 03/13/03

PROJECT: WTP
JOB NO.: 24590
CALC NO.: 24590-WTP-M4C-FRP-00003
SHEET REV: A
SHEET NO.: 56

SUBJECT: Integrated Baseline Emissions Report Non-SSFM Represented Constituents Emissions Rate Estimation

	A	B	C	D	E	F	G	H	I	J	K	L	M
1	**Table B-2 PJV04 Calculation**												
2			Total feed			Representatives			PJV04	Unabated PT- RFD/PJM			
3	Non-Rep Const	MW	mol/hr	lb/d			Feed Rate		Rate	PF	Non-Rep Const (g/sec)		
4	Be	9.0	5.15E+01	2.45E+01		Zr+4	3.65E+02	lb/d	2.25E-02	1.62E+04	7.93E-06		
5	CN	26.0	4.39E+02	6.03E+02		PO4-3	2.20E+03	lb/d	1.97E-01	1.12E+04	2.83E-04		
6	Co	58.9	5.45E+01	1.70E+02		60Co	1.09E+02	Ci/d	6.60E-03	1.65E+04	5.42E-05		
7	Mo	95.9	4.83E+01	2.45E+02		Bi+3	7.94E+01	lb/d	5.24E-03	1.51E+04	8.50E-05		
8	Rh	102.9	9.02E+00	4.90E+01		Zr+4	3.65E+02	lb/d	2.25E-02	1.62E+04	1.59E-05		
9	Sb	121.7	4.92E+01	3.16E+02		125Sb	4.19E+02	Ci/d	2.79E-02	1.50E+04	1.11E-04		
10	Se	78.9	4.70E+01	1.96E+02		F-	6.93E+02	lb/d	6.82E-02	1.02E+04	1.01E-04		
11	Sn	118.7	3.11E-01	1.95E+00		126Sn	2.18E+00	Ci/d	1.50E-04	1.45E+04	7.06E-07		
12	Ta	180.9	1.18E+00	1.13E+01		Zr+4	3.65E+02	lb/d	2.25E-02	1.62E+04	3.66E-06		
13	Tl	204.3	1.57E+01	1.70E+02		F-	6.93E+02	lb/d	6.82E-02	1.02E+04	8.79E-05		
14	U	238.0	4.20E+02	5.27E+03		234U	5.80E-02	Ci/d	4.24E-06	1.37E+04	2.03E-03		
15	V	50.9	4.48E+00	1.21E+01		Bi+3	7.94E+01	lb/d	5.24E-03	1.51E+04	4.19E-06		
16	W	183.8	9.31E+00	9.03E+01		Zr+4	3.65E+02	lb/d	2.25E-02	1.62E+04	2.93E-05		
17	Y	88.9	1.28E+01	6.03E+01		90Sr	1.10E+05	Ci/d	6.80E+00	1.62E+04	1.95E-05		
18			Bq/hr	Ci/d									
19	106Ru	106	2.57E+10	1.67E+01		F-	6.93E+02	lb/d	6.82E-02	1.02E+04	1.64E-03		
20	113mCd	113	8.01E+10	5.20E+01		Cd+2	2.47E+02	lb/d	2.06E-02	1.20E+04	4.34E-03		
21	134Cs	134	1.86E+10	1.20E+01		137Cs	9.26E+04	Ci/d	7.58E+00	1.22E+04	9.86E-04		
22	137mBa	137	1.93E+13	1.25E+04		137Cs	9.26E+04	Ci/d	7.58E+00	1.22E+04	1.03E+00		
23	226Ra	226	8.96E+05	5.81E-04		Zr+4	3.65E+02	lb/d	2.25E-02	1.62E+04	3.58E-08		
24	227Ac	227	4.53E+09	2.94E+00		Zr+4	3.65E+02	lb/d	2.25E-02	1.62E+04	1.81E-04		
25	228Ra	228	9.37E+08	6.08E-01		Zr+4	3.65E+02	lb/d	2.25E-02	1.62E+04	3.74E-05		
26	229Th	229	3.91E+07	2.53E-02		232Th	1.05E-02	Ci/d	7.05E-07	1.50E+04	1.69E-06		
27	231Pa	231	9.96E+09	6.46E+00		Zr+4	3.65E+02	lb/d	2.25E-02	1.62E+04	3.98E-04		
28	232U	232	8.01E+08	5.20E-01		233U	4.90E-02	Ci/d	4.23E-06	1.16E+04	4.49E-05		
29	242Pu	242	8.48E+06	5.50E-03		241Pu	2.36E+02	Ci/d	1.43E-02	1.66E+04	3.32E-07		
30	243Am	243	2.33E+08	1.51E-01		241Am	9.67E+02	Ci/d	5.84E-02	1.66E+04	9.12E-06		
31	59Ni	59	1.34E+10	8.68E+00		63Ni	5.99E+01	Ci/d	3.93E-03	1.52E+04	5.70E-04		
32	79Se	79	7.42E+08	4.82E-01		F-	6.93E+02	lb/d	6.82E-02	1.02E+04	4.74E-05		
33	90Y	90	2.19E+14	1.42E+05		90Sr	1.10E+05	Ci/d	6.80E+00	1.62E+04	8.74E+00		
34	93Zr	93	3.22E+10	2.09E+01		Zr+4	3.65E+02	lb/d	2.25E-02	1.62E+04	1.28E-03		
35	93mNb	93	2.90E+10	1.88E+01		Zr+4	3.65E+02	lb/d	2.25E-02	1.62E+04	1.16E-03		
36	242Cm	242	9.55E+08	6.19E-01		243Cm	3.22E+01	Ci/d	1.94E-03	1.66E+04	3.74E-05		

CALCULATION SHEET

BY: E. Berrios
DATE: 03/13/03

PROJECT: WTP
JOB NO.: 24590
CALC NO.: 24590-WTP-M4C-FRP-00003
SHEET REV: A
SHEET NO.: 57

SUBJECT: Integrated Baseline Emissions Report Non-SSFM Represented Constituents Emissions Rate Estimation

	A	B	C	D	E	F	G	H	I	J	K	L	M
1	Table B-3 FEP06 Calculation												
2			Total feed			Representatives			FEP06	Unabated PT- LAW Feed Evap			
3	Non-Rep Const	MW	mol/hr	lb/d			Feed Rate		Rate	PF	Non-Rep Const (g/sec)		
4	Be	9.0	5.15E+01	2.45E+01		Zr+4	3.65E+02	lb/d	3.69E-01	9.90E+02	1.30E-04		
5	CN	26.0	4.39E+02	6.03E+02		PO4-3	2.20E+03	lb/d	3.34E+00	6.59E+02	4.81E-03		
6	Co	58.9	5.45E+01	1.70E+02		60Co	1.09E+02	Ci/d	1.09E-01	9.97E+02	8.94E-04		
7	Mo	95.9	4.83E+01	2.45E+02		Bi+3	7.94E+01	lb/d	2.20E-02	3.61E+03	3.56E-04		
8	Rh	102.9	9.02E+00	4.90E+01		Zr+4	3.65E+02	lb/d	3.69E-01	9.90E+02	2.60E-04		
9	Sb	121.7	4.92E+01	3.16E+02		125Sb	4.19E+02	Ci/d	1.17E-01	3.58E+03	4.64E-04		
10	Se	78.9	4.70E+01	1.96E+02		F-	6.93E+02	lb/d	4.54E-02	1.53E+04	6.74E-05		
11	Sn	118.7	3.11E-01	1.95E+00		126Sn	2.18E+00	Ci/d	6.32E-04	3.45E+03	2.97E-06		
12	Ta	180.9	1.18E+00	1.13E+01		Zr+4	3.65E+02	lb/d	3.69E-01	9.90E+02	8.01E-05		
13	Tl	204.3	1.57E+01	1.70E+02		F-	6.93E+02	lb/d	4.54E-02	1.53E+04	5.85E-05		
14	U	238.0	4.20E+02	5.27E+03		234U	5.80E-02	Ci/d	7.10E-05	8.17E+02	3.40E-02		
15	V	50.9	4.48E+00	1.21E+01		Bi+3	7.94E+01	lb/d	2.20E-02	3.61E+03	1.75E-05		
16	W	183.8	9.31E+00	9.03E+01		Zr+4	3.65E+02	lb/d	3.69E-01	9.90E+02	4.80E-04		
17	Y	88.9	1.28E+01	6.03E+01		90Sr	1.10E+05	Ci/d	4.88E-01	2.26E+05	1.40E-06		
18			Bq/hr	Ci/d									
19	106Ru	106	2.57E+10	1.67E+01		F-	6.93E+02	lb/d	4.54E-02	1.53E+04	1.09E-03		
20	113mCd	113	8.01E+10	5.20E+01		Cd+2	2.47E+02	lb/d	1.55E-02	1.59E+04	3.27E-03		
21	134Cs	134	1.86E+10	1.20E+01		137Cs	9.26E+04	Ci/d	1.51E-03	6.15E+07	1.96E-07		
22	137mBa	137	1.93E+13	1.25E+04		137Cs	9.26E+04	Ci/d	1.51E-03	6.15E+07	2.04E-04		
23	226Ra	226	8.96E+05	5.81E-04		Zr+4	3.65E+02	lb/d	3.69E-01	9.90E+02	5.87E-07		
24	227Ac	227	4.53E+09	2.94E+00		Zr+4	3.65E+02	lb/d	3.69E-01	9.90E+02	2.96E-03		
25	228Ra	228	9.37E+08	6.08E-01		Zr+4	3.65E+02	lb/d	3.69E-01	9.90E+02	6.14E-04		
26	229Th	229	3.91E+07	2.53E-02		232Th	1.05E-02	Ci/d	1.17E-05	8.99E+02	2.82E-05		
27	231Pa	231	9.96E+09	6.46E+00		Zr+4	3.65E+02	lb/d	3.69E-01	9.90E+02	6.52E-03		
28	232U	232	8.01E+08	5.20E-01		233U	4.90E-02	Ci/d	7.17E-05	6.84E+02	7.60E-04		
29	242Pu	242	8.48E+06	5.50E-03		241Pu	2.36E+02	Ci/d	6.36E-05	3.72E+06	1.48E-09		
30	243Am	243	2.33E+08	1.51E-01		241Am	9.67E+02	Ci/d	6.90E-04	1.40E+06	1.08E-07		
31	59Ni	59	1.34E+10	8.68E+00		63Ni	5.99E+01	Ci/d	2.23E-03	2.68E+04	3.23E-04		
32	79Se	79	7.42E+08	4.82E-01		F-	6.93E+02	lb/d	4.54E-02	1.53E+04	3.16E-05		
33	90Y	90	2.19E+14	1.42E+05		90Sr	1.10E+05	Ci/d	4.88E-01	2.26E+05	6.27E-01		
34	93Zr	93	3.22E+10	2.09E+01		Zr+4	3.65E+02	lb/d	3.69E-01	9.90E+02	2.11E-02		
35	93mNb	93	2.90E+10	1.88E+01		Zr+4	3.65E+02	lb/d	3.69E-01	9.90E+02	1.90E-02		
36	242Cm	242	9.55E+08	6.19E-01		243Cm	3.22E+01	Ci/d	3.20E-02	1.00E+03	6.16E-04		

CALCULATION SHEET

BY: E. Berrios
DATE: 03/13/03

PROJECT: WTP
JOB NO.: 24590
CALC NO.: 24590-WTP-M4C-FRP-00003
SHEET REV: A
SHEET NO.: 58

SUBJECT: Integrated Baseline Emissions Report Non-SSFM Represented Constituents Emissions Rate Estimation

	A	B	C	D	E	F	G	H	I	J	K	L	M
1	**Table B-4 PVP01 Calculation**												
2			Total feed			Representatives			PVP01	Unabated PT-VV			
3	Non-Rep Const	MW	mol/hr	lb/d			Feed Rate		Rate	PF	Non-Rep Const (g/sec)		
4	Be	9.0	5.15E+01	2.45E+01		Zr+4	3.65E+02	lb/d	2.13E-03	1.72E+05	7.50E-07		
5	CN	26.0	4.39E+02	6.03E+02		PO4-3	2.20E+03	lb/d	2.74E-02	8.05E+04	3.94E-05		
6	Co	58.9	5.45E+01	1.70E+02		60Co	1.09E+02	Ci/d	5.61E-04	1.94E+05	4.60E-05		
7	Mo	95.9	4.83E+01	2.45E+02		Bi+3	7.94E+01	lb/d	3.59E-04	2.21E+05	5.82E-06		
8	Rh	102.9	9.02E+00	4.90E+01		Zr+4	3.65E+02	lb/d	2.13E-03	1.72E+05	1.50E-06		
9	Sb	121.7	4.92E+01	3.16E+02		125Sb	4.19E+02	Ci/d	1.93E-03	2.17E+05	7.67E-06		
10	Se	78.9	4.70E+01	1.96E+02		F-	6.93E+02	lb/d	6.69E-03	1.04E+05	9.92E-06		
11	Sn	118.7	3.11E-01	1.95E+00		125Sn	2.18E+00	Ci/d	1.11E-05	1.97E+05	5.21E-08		
12	Ta	180.9	1.18E+00	1.13E+01		Zr+4	3.65E+02	lb/d	2.13E-03	1.72E+05	3.47E-07		
13	Ti	204.3	1.57E+01	1.70E+02		F-	6.93E+02	lb/d	6.69E-03	1.04E+05	8.61E-06		
14	U	238.0	4.20E+02	5.27E+03		234U	5.80E-02	Ci/d	5.10E-07	1.14E+05	2.44E-04		
15	V	50.9	4.48E+00	1.21E+01		Bi+3	7.94E+01	lb/d	3.59E-04	2.21E+05	2.87E-07		
16	W	183.8	9.31E+00	9.03E+01		Zr+4	3.65E+02	lb/d	2.13E-03	1.72E+05	2.77E-06		
17	Y	88.9	1.28E+01	6.03E+01		90Sr	1.10E+05	Ci/d	4.07E-01	2.71E+05	1.17E-06		
18			Bq/hr	Ci/d									
19	106Ru	106	2.57E+10	1.67E+01		F-	6.93E+02	lb/d	6.69E-03	1.04E+05	1.61E-04		
20	113mCd	113	8.01E+10	5.20E+01		Cd+2	2.47E+02	lb/d	1.80E-03	1.37E+05	3.79E-04		
21	134Cs	134	1.86E+10	1.20E+01		137Cs	9.26E+04	Ci/d	6.00E-01	1.54E+05	7.80E-05		
22	137mBa	137	1.93E+13	1.25E+04		137Cs	9.26E+04	Ci/d	6.00E-01	1.54E+05	8.13E-02		
23	226Ra	226	8.96E+05	5.81E-04		Zr+4	3.65E+02	lb/d	2.13E-03	1.72E+05	3.38E-09		
24	227Ac	227	4.53E+09	2.94E+00		Zr+4	3.65E+02	lb/d	2.13E-03	1.72E+05	1.71E-05		
25	228Ra	228	9.37E+08	6.08E-01		Zr+4	3.65E+02	lb/d	2.13E-03	1.72E+05	3.54E-06		
26	229Th	229	3.91E+07	2.53E-02		232Th	1.05E-02	Ci/d	7.05E-08	1.50E+05	1.69E-07		
27	231Pa	231	9.96E+09	6.46E+00		Zr+4	3.65E+02	lb/d	2.13E-03	1.72E+05	3.76E-05		
28	232U	232	8.01E+08	5.20E-01		233U	4.90E-02	Ci/d	6.22E-07	7.88E+04	6.59E-06		
29	242Pu	242	8.48E+06	5.50E-03		241Pu	2.36E+02	Ci/d	8.31E-04	2.84E+05	1.94E-08		
30	243Am	243	2.33E+08	1.51E-01		241Am	9.67E+02	Ci/d	3.40E-03	2.85E+05	5.31E-07		
31	59Ni	59	1.34E+10	8.68E+00		63Ni	5.99E+01	Ci/d	2.69E-04	2.22E+05	3.90E-05		
32	79Se	79	7.42E+08	4.82E-01		F-	6.93E+02	lb/d	6.69E-03	1.04E+05	4.64E-06		
33	90Y	90	2.19E+14	1.42E+05		90Sr	1.10E+05	Ci/d	4.07E-01	2.71E+05	5.23E-01		
34	93Zr	93	3.22E+10	2.09E+01		Zr+4	3.65E+02	lb/d	2.13E-03	1.72E+05	1.22E-04		
35	93mNb	93	2.90E+10	1.88E+01		Zr+4	3.65E+02	lb/d	2.13E-03	1.72E+05	1.09E-04		
36	242Cm	242	9.55E+08	6.19E-01		243Cm	3.22E+01	Ci/d	1.62E-04	1.98E+05	3.12E-06		

CALCULATION SHEET

BY: E. Berrios
DATE: 03/13/03

PROJECT: WTP
JOB NO.: 24590
CALC NO.: 24590-WTP-M4C-FRP-00003
SHEET REV: A
SHEET NO.: 59

SUBJECT: Integrated Baseline Emissions Report Non-SSFM Represented Constituents Emissions Rate Estimation

	A	B	C	D	E	F	G	H	I	J	K	L	M
1	**Table B-5 TLP01 Calculation**												
2			Total feed			Representatives			TLP01	Unabated PT- LAW Melter Evap			
3	Non-Rep Const	MW	mol/hr	lb/d			Feed Rate		Rate	PF	Non-Rep Const (g/sec)		
4	Be	9.0	5.15E+01	2.45E+01		Zr+4	3.65E+02	lb/d	1.73E-02	2.11E+04	6.10E-06		
5	CN	26.0	4.39E+02	6.03E+02		PO4-3	2.20E+03	lb/d	1.78E+00	1.24E+03	2.56E-03		
6	Co	58.9	5.45E+01	1.70E+02		60Co	1.09E+02	Ci/d	2.47E-03	4.39E+04	2.03E-05		
7	Mo	95.9	4.83E+01	2.45E+02		Bi+3	7.94E+01	lb/d	2.96E-03	2.68E+04	4.80E-05		
8	Rh	102.9	9.02E+00	4.90E+01		Zr+4	3.65E+02	lb/d	1.73E-02	2.11E+04	1.22E-05		
9	Sb	121.7	4.92E+01	3.16E+02		125Sb	4.19E+02	Ci/d	3.36E-02	1.25E+04	1.33E-04		
10	Se	78.9	4.70E+01	1.96E+02		F-	6.93E+02	lb/d	3.04E-02	2.28E+04	4.52E-05		
11	Sn	118.7	3.11E-01	1.95E+00		126Sn	2.18E+00	Ci/d	2.51E-04	8.68E+03	1.18E-06		
12	Ta	180.9	1.18E+00	1.13E+01		Zr+4	3.65E+02	lb/d	1.73E-02	2.11E+04	2.82E-06		
13	Tl	204.3	1.57E+01	1.70E+02		F-	6.93E+02	lb/d	3.04E-02	2.28E+04	3.92E-05		
14	U	238.0	4.20E+02	5.27E+03		234U	5.80E-02	Ci/d	3.99E-05	1.46E+03	1.91E-02		
15	V	50.9	4.48E+00	1.21E+01		Bi+3	7.94E+01	lb/d	2.96E-03	2.68E+04	2.37E-06		
16	W	183.8	9.31E+00	9.03E+01		Zr+4	3.65E+02	lb/d	1.73E-02	2.11E+04	2.25E-05		
17	Y	88.9	1.28E+01	6.03E+01		90Sr	1.10E+05	Ci/d	1.21E-02	9.10E+06	3.49E-08		
18			Bq/hr	Ci/d									
19	106Ru	106	2.57E+10	1.67E+01		F-	6.93E+02	lb/d	3.04E-02	2.28E+04	7.33E-04		
20	113mCd	113	8.01E+10	5.20E+01		Cd+2	2.47E+02	lb/d	6.39E-03	3.86E+04	1.35E-03		
21	134Cs	134	1.86E+10	1.20E+01		137Cs	9.26E+04	Ci/d	1.49E-07	6.23E+11	1.93E-11		
22	137mBa	137	1.93E+13	1.25E+04		137Cs	9.26E+04	Ci/d	1.49E-07	6.23E+11	2.01E-08		
23	226Ra	226	8.96E+05	5.81E-04		Zr+4	3.65E+02	lb/d	1.73E-02	2.11E+04	2.75E-08		
24	227Ac	227	4.53E+09	2.94E+00		Zr+4	3.65E+02	lb/d	1.73E-02	2.11E+04	1.39E-04		
25	228Ra	228	9.37E+08	6.08E-01		Zr+4	3.65E+02	lb/d	1.73E-02	2.11E+04	2.88E-05		
26	229Th	229	3.91E+07	2.53E-02		232Th	1.05E-02	Ci/d	1.88E-06	5.62E+03	4.51E-06		
27	231Pa	231	9.96E+09	6.46E+00		Zr+4	3.65E+02	lb/d	1.73E-02	2.11E+04	3.06E-04		
28	232U	232	8.01E+08	5.20E-01		233U	4.90E-02	Ci/d	6.85E-05	7.15E+02	7.27E-04		
29	242Pu	242	8.48E+06	5.50E-03		241Pu	2.36E+02	Ci/d	1.89E-07	1.25E+09	4.40E-12		
30	243Am	243	2.33E+08	1.51E-01		241Am	9.67E+02	Ci/d	9.24E-07	1.05E+09	1.44E-10		
31	59Ni	59	1.34E+10	8.68E+00		63Ni	5.99E+01	Ci/d	5.44E-04	1.10E+05	7.89E-05		
32	79Se	79	7.42E+08	4.82E-01		F-	6.93E+02	lb/d	3.04E-02	2.28E+04	2.11E-05		
33	90Y	90	2.19E+14	1.42E+05		90Sr	1.10E+05	Ci/d	1.21E-02	9.10E+06	1.56E-02		
34	93Zr	93	3.22E+10	2.09E+01		Zr+4	3.65E+02	lb/d	1.73E-02	2.11E+04	9.88E-04		
35	93mNb	93	2.90E+10	1.88E+01		Zr+4	3.65E+02	lb/d	1.73E-02	2.11E+04	8.90E-04		
36	242Cm	242	9.55E+08	6.19E-01		243Cm	3.22E+01	Ci/d	4.04E-06	7.97E+06	7.77E-08		

CALCULATION SHEET

BY: E. Berrios
DATE: 03/13/03

PROJECT: WTP
JOB NO.: 24590
CALC NO.: 24590-WTP-M4C-FRP-00003
SHEET REV: A
SHEET NO.: 60

SUBJECT: Integrated Baseline Emissions Report Non-SSFM Represented Constituents Emissions Rate Estimation

	A	B	C	D	E	F	G	H	I	J	K	L	M
1	**Table B-6 LMP06 Calculation**												
2			Total feed			Representatives			LMP06	Unabated LAW OFFGAS			
3	Non-Rep Const	MW	mol/hr	lb/d			Feed Rate		Rate	PF	Non-Rep Const (g/sec)		
4	Be	9.0	5.15E+01	2.45E+01		Zr+4	3.65E+02	lb/d	8.19E+00	4.46E+01	2.89E-03		
5	CN	26.0	4.39E+02	6.03E+02		PO4-3	2.20E+03	lb/d	4.49E+01	4.91E+01	6.46E-02		
6	Co	58.9	5.45E+01	1.70E+02		60Co	1.09E+02	Ci/d	6.49E-03	1.68E+04	5.32E-05		
7	Mo	95.9	4.83E+01	2.45E+02		Bi+3	7.94E+01	lb/d	1.21E-01	6.57E+02	1.96E-03		
8	Rh	102.9	9.02E+00	4.90E+01		Zr+4	3.65E+02	lb/d	8.19E+00	4.46E+01	5.78E-03		
9	Sb	121.7	4.92E+01	3.16E+02		125Sb	4.19E+02	Ci/d	6.97E-01	6.02E+02	2.76E-03		
10	Se	78.9	4.70E+01	1.96E+02		F-	6.93E+02	lb/d	1.23E+02	5.62E+00	1.83E-01		
11	Sn	118.7	3.11E-01	1.95E+00		126Sn	2.18E+00	Ci/d	2.60E-03	8.37E+02	1.22E-05		
12	Ta	180.9	1.18E+00	1.13E+01		Zr+4	3.65E+02	lb/d	8.19E+00	4.46E+01	1.33E-03		
13	Tl	204.3	1.57E+01	1.70E+02		F-	6.93E+02	lb/d	1.23E+02	5.62E+00	1.59E-01		
14	U	238.0	4.20E+02	5.27E+03		234U	5.80E-02	Ci/d	1.04E-04	5.57E+02	4.98E-02		
15	V	50.9	4.48E+00	1.21E+01		Bi+3	7.94E+01	lb/d	1.21E-01	6.57E+02	9.64E-05		
16	W	183.8	9.31E+00	9.03E+01		Zr+4	3.65E+02	lb/d	8.19E+00	4.46E+01	1.07E-02		
17	Y	88.9	1.28E+01	6.03E+01		90Sr	1.10E+05	Ci/d	2.81E+01	3.92E+03	8.09E-05		
18			Bq/hr	Ci/d									
19	106Ru	106	2.57E+10	1.67E+01		F-	6.93E+02	lb/d	1.23E+02	5.62E+00	2.97E+00		
20	113mCd	113	8.01E+10	5.20E+01		Cd+2	2.47E+02	lb/d	1.41E+01	1.75E+01	2.98E+00		
21	134Cs	134	1.86E+10	1.20E+01		137Cs	9.26E+04	Ci/d	4.63E-01	2.00E+05	6.03E-05		
22	137mBa	137	1.93E+13	1.25E+04		137Cs	9.26E+04	Ci/d	4.63E-01	2.00E+05	6.28E-02		
23	226Ra	226	8.96E+05	5.81E-04		Zr+4	3.65E+02	lb/d	8.19E+00	4.46E+01	1.30E-05		
24	227Ac	227	4.53E+09	2.94E+00		Zr+4	3.65E+02	lb/d	8.19E+00	4.46E+01	6.58E-02		
25	228Ra	228	9.37E+08	6.08E-01		Zr+4	3.65E+02	lb/d	8.19E+00	4.46E+01	1.36E-02		
26	229Th	229	3.91E+07	2.53E-02		232Th	1.05E-02	Ci/d	9.64E-06	1.09E+03	2.32E-05		
27	231Pa	231	9.96E+09	6.46E+00		Zr+4	3.65E+02	lb/d	8.19E+00	4.46E+01	1.45E-01		
28	232U	232	8.01E+08	5.20E-01		233U	4.90E-02	Ci/d	1.79E-04	2.74E+02	1.90E-03		
29	242Pu	242	8.48E+06	5.50E-03		241Pu	2.36E+02	Ci/d	1.88E-03	1.26E+05	4.38E-08		
30	243Am	243	2.33E+08	1.51E-01		241Am	9.67E+02	Ci/d	6.51E-03	1.48E+05	1.02E-06		
31	59Ni	59	1.34E+10	8.68E+00		63Ni	5.99E+01	Ci/d	9.35E-02	6.40E+02	1.35E-02		
32	79Se	79	7.42E+08	4.82E-01		F-	6.93E+02	lb/d	1.23E+02	5.62E+00	8.57E-02		
33	90Y	90	2.19E+14	1.42E+05		90Sr	1.10E+05	Ci/d	2.81E+01	3.92E+03	3.62E+01		
34	93Zr	93	3.22E+10	2.09E+01		Zr+4	3.65E+02	lb/d	8.19E+00	4.46E+01	4.68E-01		
35	93mNb	93	2.90E+10	1.88E+01		Zr+4	3.65E+02	lb/d	8.19E+00	4.46E+01	4.22E-01		
36	242Cm	242	9.55E+08	6.19E-01		243Cm	3.22E+01	Ci/d	1.74E-05	1.85E+06	3.35E-07		

CALCULATION SHEET

BY: E. Berrios
DATE: 03/13/03

PROJECT: WTP
JOB NO.: 24590
CALC NO.: 24590-WTP-M4C-FRP-00003
SHEET REV: A
SHEET NO.: 61

SUBJECT: Integrated Baseline Emissions Report Non-SSFM Represented Constituents Emissions Rate Estimation

	A	B	C	D	E	F	G	H	I	J	K	L	M
1	**Table B-7 LVP01 Calculation**												
2			Total feed			Representatives			LVP01	Unabated LAW VV			
3	Non-Rep Const	MW	mol/hr	lb/d			Feed Rate		Rate	PF	Non-Rep Const (g/sec)		
4	Be	9.0	5.15E+01	2.45E+01		Zr+4	1.92E+00	g/sec	1.31E-07	1.47E+07	1.66E-06		
5	CN	26.0	4.39E+02	6.03E+02		PO4-3	1.16E+01	g/sec	1.89E-07	6.13E+07	9.83E-06		
6	Co	58.9	5.45E+01	1.70E+02		60Co	1.09E+02	Ci/d	2.60E-08	4.17E+09	4.06E-08		
7	Mo	95.9	4.83E+01	2.45E+02		Bi+3	4.18E-01	g/sec	1.28E-09	3.27E+08	7.49E-07		
8	Rh	102.9	9.02E+00	4.90E+01		Zr+4	1.92E+00	g/sec	1.31E-07	1.47E+07	3.33E-06		
9	Sb	121.7	4.92E+01	3.16E+02		125Sb	4.19E+02	Ci/d	1.40E-06	2.99E+08	1.06E-06		
10	Se	78.9	4.70E+01	1.96E+02		F-	3.65E+00	g/sec	8.77E-08	4.16E+07	4.70E-06		
11	Sn	118.7	3.11E-01	1.95E+00		126Sn	2.18E+00	Ci/d	1.04E-08	2.09E+08	9.33E-09		
12	Ta	180.9	1.18E+00	1.13E+01		Zr+4	1.92E+00	g/sec	1.31E-07	1.47E+07	7.69E-07		
13	Tl	204.3	1.57E+01	1.70E+02		F-	3.65E+00	g/sec	8.77E-08	4.16E+07	4.08E-06		
14	U	238.0	4.20E+02	5.27E+03		234U	5.80E-02	Ci/d	4.18E-10	1.39E+08	3.80E-05		
15	V	50.9	4.48E+00	1.21E+01		Bi+3	4.18E-01	g/sec	1.28E-09	3.27E+08	3.69E-08		
16	W	183.8	9.31E+00	9.03E+01		Zr+4	1.92E+00	g/sec	1.31E-07	1.47E+07	6.14E-06		
17	Y	88.9	1.28E+01	6.03E+01		90Sr	1.10E+05	Ci/d	5.66E-05	1.95E+09	3.09E-08		
18			Bq/hr	Ci/d									
19	106Ru	106	2.57E+10	1.67E+01		F-	3.65E+00	g/sec	8.77E-08	4.16E+07	4.02E-07		
20	113mCd	113	8.01E+10	5.20E+01		Cd+2	1.30E+00	g/sec	1.61E-08	8.08E+07	6.43E-07		
21	134Cs	134	1.86E+10	1.20E+01		137Cs	9.26E+04	Ci/d	2.84E-07	3.25E+11	3.70E-11		
22	137mBa	137	1.93E+13	1.25E+04		137Cs	9.26E+04	Ci/d	2.84E-07	3.25E+11	3.85E-08		
23	226Ra	226	8.96E+05	5.81E-04		Zr+4	1.92E+00	g/sec	1.31E-07	1.47E+07	3.95E-11		
24	227Ac	227	4.53E+09	2.94E+00		Zr+4	1.92E+00	g/sec	1.31E-07	1.47E+07	2.00E-07		
25	228Ra	228	9.37E+08	6.08E-01		Zr+4	1.92E+00	g/sec	1.31E-07	1.47E+07	4.13E-08		
26	229Th	229	3.91E+07	2.53E-02		232Th	5.54E-05	Ci/d	3.87E-11	1.43E+06	1.77E-08		
27	231Pa	231	9.96E+09	6.46E+00		Zr+4	1.92E+00	g/sec	1.31E-07	1.47E+07	4.39E-07		
28	232U	232	8.01E+08	5.20E-01		233U	4.90E-02	Ci/d	7.18E-10	6.83E+07	7.61E-09		
29	242Pu	242	8.48E+06	5.50E-03		241Pu	2.36E+02	Ci/d	7.55E-09	3.13E+10	1.76E-13		
30	243Am	243	2.33E+08	1.51E-01		241Am	9.67E+02	Ci/d	2.61E-08	3.70E+10	4.08E-12		
31	59Ni	59	1.34E+10	8.68E+00		63Ni	5.99E+01	Ci/d	1.67E-07	3.57E+08	2.43E-08		
32	79Se	79	7.42E+08	4.82E-01		F-	3.65E+00	g/sec	8.77E-08	4.16E+07	1.16E-08		
33	90Y	90	2.19E+14	1.42E+05		90Sr	1.10E+05	Ci/d	5.66E-05	1.95E+09	7.27E-05		
34	93Zr	93	3.22E+10	2.09E+01		Zr+4	1.92E+00	g/sec	1.31E-07	1.47E+07	1.42E-06		
35	93mNb	93	2.90E+10	1.88E+01		Zr+4	1.92E+00	g/sec	1.31E-07	1.47E+07	1.28E-06		
36	242Cm	242	9.55E+08	6.19E-01		243Cm	3.22E+01	Ci/d	6.99E-11	4.60E+11	1.34E-12		

CALCULATION SHEET

BY: E. Berrios
DATE: 03/13/03

PROJECT: WTP
JOB NO.: 24590
CALC NO.: 24590-WTP-M4C-FRP-00003
SHEET REV: A
SHEET NO.: 62

SUBJECT: Integrated Baseline Emissions Report Non-SSFM Represented Constituents Emissions Rate Estimation

	A	B	C	D	E	F	G	H	I	J	K	L	M
1	**Table B-8 HMP06 Calculation**												
2			Total feed			Representatives			HMP06	Unabated HLW OFFGAS			
3	Non-Rep Const	MW	mol/hr	lb/d			Feed Rate		Rate	PF	Non-Rep Const (g/sec)		
4	Be	9.0	5.15E+01	2.45E+01		Zr+4	3.65E+02	lb/d	1.19E+00	3.07E+02	4.19E-04		
5	CN	26.0	4.39E+02	6.03E+02		PO4-3	2.20E+03	lb/d	9.95E+00	2.21E+02	1.43E-02		
6	Co	58.9	5.45E+01	1.70E+02		60Co	1.09E+02	Ci/d	5.39E-01	2.02E+02	4.42E-03		
7	Mo	95.9	4.83E+01	2.45E+02		Bi+3	7.94E+01	lb/d	6.81E-01	1.17E+02	1.10E-02		
8	Rh	102.9	9.02E+00	4.90E+01		Zr+4	3.65E+02	lb/d	1.19E+00	3.07E+02	8.39E-04		
9	Sb	121.7	4.92E+01	3.16E+02		125Sb	4.19E+02	Ci/d	3.54E+00	1.19E+02	1.40E-02		
10	Se	78.9	4.70E+01	1.96E+02		F-	6.93E+02	lb/d	2.61E+01	2.66E+01	3.87E-02		
11	Sn	118.7	3.11E-01	1.95E+00		126Sn	2.18E+00	Ci/d	8.34E-03	2.61E+02	3.92E-05		
12	Ta	180.9	1.18E+00	1.13E+01		Zr+4	3.65E+02	lb/d	1.19E+00	3.07E+02	1.94E-04		
13	Tl	204.3	1.57E+01	1.70E+02		F-	6.93E+02	lb/d	2.61E+01	2.66E+01	3.36E-02		
14	U	238.0	4.20E+02	5.27E+03		234U	5.80E-02	Ci/d	1.87E-04	3.11E+02	8.93E-02		
15	V	50.9	4.48E+00	1.21E+01		Bi+3	7.94E+01	lb/d	6.81E-01	1.17E+02	5.43E-04		
16	W	183.8	9.31E+00	9.03E+01		Zr+4	3.65E+02	lb/d	1.19E+00	3.07E+02	1.55E-03		
17	Y	88.9	1.28E+01	6.03E+01		90Sr	1.10E+05	Ci/d	1.09E+03	1.02E+02	3.12E-03		
18			Bq/hr	Ci/d									
19	106Ru	106	2.57E+10	1.67E+01		F-	6.93E+02	lb/d	2.61E+01	2.66E+01	6.29E-01		
20	113mCd	113	8.01E+10	5.20E+01		Cd+2	2.47E+02	lb/d	1.32E+01	1.87E+01	2.79E+00		
21	134Cs	134	1.86E+10	1.20E+01		137Cs	9.26E+04	Ci/d	3.19E+03	2.90E+01	4.15E-01		
22	137mBa	137	1.93E+13	1.25E+04		137Cs	9.26E+04	Ci/d	3.19E+03	2.90E+01	4.32E+02		
23	226Ra	226	8.96E+05	5.81E-04		Zr+4	3.65E+02	lb/d	1.19E+00	3.07E+02	1.89E-06		
24	227Ac	227	4.53E+09	2.94E+00		Zr+4	3.65E+02	lb/d	1.19E+00	3.07E+02	9.56E-03		
25	228Ra	228	9.37E+08	6.08E-01		Zr+4	3.65E+02	lb/d	1.19E+00	3.07E+02	1.98E-03		
26	229Th	229	3.91E+07	2.53E-02		232Th	1.05E-02	Ci/d	4.32E-05	2.44E+02	1.04E-04		
27	231Pa	231	9.96E+09	6.46E+00		Zr+4	3.65E+02	lb/d	1.19E+00	3.07E+02	2.10E-02		
28	232U	232	8.01E+08	5.20E-01		233U	4.90E-02	Ci/d	6.64E-05	7.38E+02	7.04E-04		
29	242Pu	242	8.48E+06	5.50E-03		241Pu	2.36E+02	Ci/d	1.19E+00	1.99E+02	2.76E-05		
30	243Am	243	2.33E+08	1.51E-01		241Am	9.67E+02	Ci/d	4.85E+00	1.99E+02	7.58E-04		
31	59Ni	59	1.34E+10	8.68E+00		63Ni	5.99E+01	Ci/d	5.86E-01	1.02E+02	8.50E-02		
32	79Se	79	7.42E+08	4.82E-01		F-	6.93E+02	lb/d	2.61E+01	2.66E+01	1.81E-02		
33	90Y	90	2.19E+14	1.42E+05		90Sr	1.10E+05	Ci/d	1.09E+03	1.02E+02	1.40E+03		
34	93Zr	93	3.22E+10	2.09E+01		Zr+4	3.65E+02	lb/d	1.19E+00	3.07E+02	6.80E-02		
35	93mNb	93	2.90E+10	1.88E+01		Zr+4	3.65E+02	lb/d	1.19E+00	3.07E+02	6.12E-02		
36	242Cm	242	9.55E+08	6.19E-01		243Cm	3.22E+01	Ci/d	1.62E-01	1.99E+02	3.11E-03		

CALCULATION SHEET

BY: E. Berrios
DATE: 03/13/03

PROJECT: WTP
JOB NO.: 24590
CALC NO.: 24590-WTP-M4C-FRP-00003
SHEET REV: A
SHEET NO.: 63

SUBJECT: Integrated Baseline Emissions Report Non-SSFM Represented Constituents Emissions Rate Estimation

	A	B	C	D	E	F	G	H	I	J	K	L	M
1	**Table B-9 HOP10 Calculation**												
2			Total feed			Representatives			HOP10	Unabated HLW VV			
3	Non-Rep Const	MW	mol/hr	lb/d			Feed Rate		Rate	PF	Non-Rep Const (g/sec)		
4	Be	9.0	5.15E+01	2.45E+01		Zr+4	3.65E+02	lb/d	1.62E-05	2.26E+07	5.70E-09		
5	CN	26.0	4.39E+02	6.03E+02		PO4-3	2.20E+03	lb/d	4.77E-06	4.61E+08	6.87E-09		
6	Co	58.9	5.45E+01	1.70E+02		60Co	1.09E+02	Ci/d	6.69E-06	1.63E+07	5.49E-08		
7	Mo	95.9	4.83E+01	2.45E+02		Bi+3	7.94E+01	lb/d	7.62E-06	1.04E+07	1.24E-07		
8	Rh	102.9	9.02E+00	4.90E+01		Zr+4	3.65E+02	lb/d	1.62E-05	2.26E+07	1.14E-08		
9	Sb	121.7	4.92E+01	3.16E+02		125Sb	4.19E+02	Ci/d	3.96E-05	1.06E+07	1.57E-07		
10	Se	78.9	4.70E+01	1.96E+02		F-	6.93E+02	lb/d	3.82E-04	1.81E+06	5.68E-07		
11	Sn	118.7	3.11E-01	1.95E+00		126Sn	2.18E+00	Ci/d	1.03E-07	2.11E+07	4.86E-10		
12	Ta	180.9	1.18E+00	1.13E+01		Zr+4	3.65E+02	lb/d	1.62E-05	2.26E+07	2.64E-09		
13	Tl	204.3	1.57E+01	1.70E+02		F-	6.93E+02	lb/d	3.82E-04	1.81E+06	4.92E-07		
14	U	238.0	4.20E+02	5.27E+03		234U	5.80E-02	Ci/d	2.31E-09	2.51E+07	1.11E-06		
15	V	50.9	4.48E+00	1.21E+01		Bi+3	7.94E+01	lb/d	7.62E-06	1.04E+07	6.09E-09		
16	W	183.8	9.31E+00	9.03E+01		Zr+4	3.65E+02	lb/d	1.62E-05	2.26E+07	2.11E-08		
17	Y	88.9	1.28E+01	6.03E+01		90Sr	1.10E+05	Ci/d	1.22E-02	9.07E+06	3.50E-08		
18			Bq/hr	Ci/d									
19	106Ru	106	2.57E+10	1.67E+01		F-	6.93E+02	lb/d	3.82E-04	1.81E+06	9.21E-06		
20	113mCd	113	8.01E+10	5.20E+01		Cd+2	2.47E+02	lb/d	1.34E-04	1.84E+06	2.82E-05		
21	134Cs	134	1.86E+10	1.20E+01		137Cs	9.26E+04	Ci/d	3.31E-02	2.80E+06	4.30E-06		
22	137mBa	137	1.93E+13	1.25E+04		137Cs	9.26E+04	Ci/d	3.31E-02	2.80E+06	4.48E-03		
23	226Ra	226	8.96E+05	5.81E-04		Zr+4	3.65E+02	lb/d	1.62E-05	2.26E+07	2.57E-11		
24	227Ac	227	4.53E+09	2.94E+00		Zr+4	3.65E+02	lb/d	1.62E-05	2.26E+07	1.30E-07		
25	228Ra	228	9.37E+08	6.08E-01		Zr+4	3.65E+02	lb/d	1.62E-05	2.26E+07	2.69E-08		
26	229Th	229	3.91E+07	2.53E-02		232Th	1.05E-02	Ci/d	5.36E-10	1.97E+07	1.29E-09		
27	231Pa	231	9.96E+09	6.46E+00		Zr+4	3.65E+02	lb/d	1.62E-05	2.26E+07	2.86E-07		
28	232U	232	8.01E+08	5.20E-01		233U	4.90E-02	Ci/d	8.24E-10	5.95E+07	8.74E-09		
29	242Pu	242	8.48E+06	5.50E-03		241Pu	2.36E+02	Ci/d	1.47E-05	1.61E+07	3.42E-10		
30	243Am	243	2.33E+08	1.51E-01		241Am	9.67E+02	Ci/d	6.02E-05	1.61E+07	9.39E-09		
31	59Ni	59	1.34E+10	8.68E+00		63Ni	5.99E+01	Ci/d	6.49E-06	9.22E+06	9.41E-07		
32	79Se	79	7.42E+08	4.82E-01		F-	6.93E+02	lb/d	3.82E-04	1.81E+06	2.66E-07		
33	90Y	90	2.19E+14	1.42E+05		90Sr	1.10E+05	Ci/d	1.22E-02	9.07E+06	1.56E-02		
34	93Zr	93	3.22E+10	2.09E+01		Zr+4	3.65E+02	lb/d	1.62E-05	2.26E+07	9.24E-07		
35	93mNb	93	2.90E+10	1.88E+01		Zr+4	3.65E+02	lb/d	1.62E-05	2.26E+07	8.33E-07		
36	242Cm	242	9.55E+08	6.19E-01		243Cm	3.22E+01	Ci/d	2.00E-06	1.61E+07	3.86E-08		

CALCULATION SHEET

BY: E. Berrios
DATE: 03/13/03

PROJECT: WTP
JOB NO.: 24590
CALC NO.: 24590-WTP-M4C-FRP-00003
SHEET REV: A
SHEET NO.: 64

SUBJECT: Integrated Baseline Emissions Report Non-SSFM Represented Constituents Emissions Rate Estimation

	A	B	C	D	E	F	G	H	I	J	K	L	M
1	**Table B-10 PJV32 Calculation**												
2			Total feed			Representatives			PJV32	Unabated HLW RFD/PJM			
3	Non-Rep Const	MW	mol/hr	lb/d			Feed Rate		Rate	PF	Non-Rep Const (g/sec)		
4	Be	9.0	5.15E+01	2.45E+01		Zr+4	3.65E+02	lb/d	3.71E-08	9.83E+09	1.31E-11		
5	CN	26.0	4.39E+02	6.03E+02		PO4-3	2.20E+03	lb/d	3.98E-08	5.54E+10	5.73E-11		
6	Co	58.9	5.45E+01	1.70E+02		60Co	1.09E+02	Ci/d	1.15E-08	9.48E+09	9.41E-11		
7	Mo	95.9	4.83E+01	2.45E+02		Bi+3	7.94E+01	lb/d	7.67E-09	1.04E+10	1.24E-10		
8	Rh	102.9	9.02E+00	4.90E+01		Zr+4	3.65E+02	lb/d	3.71E-08	9.83E+09	2.62E-11		
9	Sb	121.7	4.92E+01	3.16E+02		125Sb	4.19E+02	Ci/d	3.98E-08	1.05E+10	1.58E-10		
10	Se	78.9	4.70E+01	1.96E+02		F-	6.93E+02	lb/d	6.32E-08	1.10E+10	9.37E-11		
11	Sn	118.7	3.11E-01	1.95E+00		126Sn	2.18E+00	Ci/d	1.77E-10	1.23E+10	8.33E-13		
12	Ta	180.9	1.18E+00	1.13E+01		Zr+4	3.65E+02	lb/d	3.71E-08	9.83E+09	6.05E-12		
13	Tl	204.3	1.57E+01	1.70E+02		F-	6.93E+02	lb/d	6.32E-08	1.10E+10	8.13E-11		
14	U	238.0	4.20E+02	5.27E+03		234U	5.80E-02	Ci/d	3.96E-12	1.46E+10	1.90E-09		
15	V	50.9	4.48E+00	1.21E+01		Bi+3	7.94E+01	lb/d	7.67E-09	1.04E+10	6.12E-12		
16	W	183.8	9.31E+00	9.03E+01		Zr+4	3.65E+02	lb/d	3.71E-08	9.83E+09	4.83E-11		
17	Y	88.9	1.28E+01	6.03E+01		90Sr	1.10E+05	Ci/d	1.22E-05	9.05E+09	3.51E-11		
18			Bq/hr	Ci/d									
19	106Ru	106	2.57E+10	1.67E+01		F-	6.93E+02	lb/d	6.32E-08	1.10E+10	1.52E-09		
20	113mCd	113	8.01E+10	5.20E+01		Cd+2	2.47E+02	lb/d	3.03E-08	8.15E+09	6.37E-09		
21	134Cs	134	1.86E+10	1.20E+01		137Cs	9.26E+04	Ci/d	1.36E-05	6.80E+09	1.77E-09		
22	137mBa	137	1.93E+13	1.25E+04		137Cs	9.26E+04	Ci/d	1.36E-05	6.80E+09	1.84E-06		
23	226Ra	226	8.96E+05	5.81E-04		Zr+4	3.65E+02	lb/d	3.71E-08	9.83E+09	5.91E-14		
24	227Ac	227	4.53E+09	2.94E+00		Zr+4	3.65E+02	lb/d	3.71E-08	9.83E+09	2.99E-10		
25	228Ra	228	9.37E+08	6.08E-01		Zr+4	3.65E+02	lb/d	3.71E-08	9.83E+09	6.18E-11		
26	229Th	229	3.91E+07	2.53E-02		232Th	1.05E-02	Ci/d	9.18E-13	1.15E+10	2.21E-12		
27	231Pa	231	9.96E+09	6.46E+00		Zr+4	3.65E+02	lb/d	3.71E-08	9.83E+09	6.57E-10		
28	232U	232	8.01E+08	5.20E-01		233U	4.90E-02	Ci/d	1.41E-12	3.48E+10	1.50E-11		
29	242Pu	242	8.48E+06	5.50E-03		241Pu	2.36E+02	Ci/d	2.52E-08	9.39E+09	5.86E-13		
30	243Am	243	2.33E+08	1.51E-01		241Am	9.67E+02	Ci/d	1.03E-07	9.39E+09	1.61E-11		
31	59Ni	59	1.34E+10	8.68E+00		63Ni	5.99E+01	Ci/d	5.95E-09	1.01E+10	8.62E-10		
32	79Se	79	7.42E+08	4.82E-01		F-	6.93E+02	lb/d	6.32E-08	1.10E+10	4.39E-11		
33	90Y	90	2.19E+14	1.42E+05		90Sr	1.10E+05	Ci/d	1.22E-05	9.05E+09	1.57E-05		
34	93Zr	93	3.22E+10	2.09E+01		Zr+4	3.65E+02	lb/d	3.71E-08	9.83E+09	2.12E-09		
35	93mNb	93	2.90E+10	1.88E+01		Zr+4	3.65E+02	lb/d	3.71E-08	9.83E+09	1.91E-09		
36	242Cm	242	9.55E+08	6.19E-01		243Cm	3.22E+01	Ci/d	3.43E-09	9.38E+09	8.60E-11		

CALCULATION SHEET

BY: E. Berrios
DATE: 03/13/03

PROJECT: WTP
JOB NO.: 24590
CALC NO.: 24590-WTP-M4C-FRP-00003
SHEET REV: A
SHEET NO.: 65

SUBJECT: Integrated Baseline Emissions Report Non-SSFM Represented Constituents Emissions Rate Estimation

	A	B	C	D	E	F	G	H	I	J	K	L	M
1	**Table B-11 PVP12 Calculation**												
2			Total feed			Representatives			PVP12	Abated PT- VV			
3	Non-Rep Const	MW	mol/hr	lb/d			Feed Rate		Rate	PF	Non-Rep Const (g/sec)		
4	Be	9.0	5.15E+01	2.45E+01		Zr+4	3.65E+02	lb/d	1.60E-11	2.29E+13	5.63E-15		
5	CN	26.0	4.39E+02	6.03E+02		PO4-3	2.20E+03	lb/d	2.05E-10	1.07E+13	2.96E-13		
6	Co	58.9	5.45E+01	1.70E+02		60Co	1.09E+02	Ci/d	4.21E-12	2.58E+13	3.46E-14		
7	Mo	95.9	4.83E+01	2.45E+02		Bi+3	7.94E+01	lb/d	2.69E-12	2.95E+13	4.37E-14		
8	Rh	102.9	9.02E+00	4.90E+01		Zr+4	3.65E+02	lb/d	1.60E-11	2.29E+13	1.13E-14		
9	Sb	121.7	4.92E+01	3.16E+02		125Sb	4.19E+02	Ci/d	1.45E-11	2.89E+13	5.76E-14		
10	Se	78.9	4.70E+01	1.96E+02		F-	6.93E+02	lb/d	5.02E-11	1.38E+13	7.45E-14		
11	Sn	118.7	3.11E-01	1.95E+00		126Sn	2.18E+00	Ci/d	8.32E-14	2.62E+13	3.91E-16		
12	Ta	180.9	1.18E+00	1.13E+01		Zr+4	3.65E+02	lb/d	1.60E-11	2.29E+13	2.60E-15		
13	Ti	204.3	1.57E+01	1.70E+02		F-	6.93E+02	lb/d	5.02E-11	1.38E+13	6.46E-14		
14	U	238.0	4.20E+02	5.27E+03		234U	5.80E-02	Ci/d	3.83E-15	1.51E+13	1.83E-12		
15	V	50.9	4.48E+00	1.21E+01		Bi+3	7.94E+01	lb/d	2.69E-12	2.95E+13	2.15E-15		
16	W	183.8	9.31E+00	9.03E+01		Zr+4	3.65E+02	lb/d	1.60E-11	2.29E+13	2.08E-14		
17	Y	88.9	1.28E+01	6.03E+01		90Sr	1.10E+05	Ci/d	3.06E-09	3.61E+13	8.78E-15		
18			Bq/hr	Ci/d									
19	106Ru	106	2.57E+10	1.67E+01		F-	6.93E+02	lb/d	5.02E-11	1.38E+13	1.21E-12		
20	113mCd	113	8.01E+10	5.20E+01		Cd+2	2.47E+02	lb/d	1.35E-11	1.83E+13	2.85E-12		
21	134Cs	134	1.86E+10	1.20E+01		137Cs	9.26E+04	Ci/d	4.51E-09	2.05E+13	5.86E-13		
22	137mBa	137	1.93E+13	1.25E+04		137Cs	9.26E+04	Ci/d	4.51E-09	2.05E+13	6.10E-10		
23	226Ra	226	8.96E+05	5.81E-04		Zr+4	3.65E+02	lb/d	1.60E-11	2.29E+13	2.54E-17		
24	227Ac	227	4.53E+09	2.94E+00		Zr+4	3.65E+02	lb/d	1.60E-11	2.29E+13	1.28E-13		
25	228Ra	228	9.37E+06	6.08E-01		Zr+4	3.65E+02	lb/d	1.60E-11	2.29E+13	2.66E-14		
26	229Th	229	3.91E+07	2.53E-02		232Th	1.05E-02	Ci/d	5.29E-16	1.99E+13	1.27E-15		
27	231Pa	231	9.96E+09	6.46E+00		Zr+4	3.65E+02	lb/d	1.60E-11	2.29E+13	2.82E-13		
28	232U	232	8.01E+08	5.20E-01		233U	4.90E-02	Ci/d	4.67E-15	1.05E+13	4.95E-14		
29	242Pu	242	8.48E+06	5.50E-03		241Pu	2.36E+02	Ci/d	6.24E-12	3.79E+13	1.45E-16		
30	243Am	243	2.33E+08	1.51E-01		241Am	9.67E+02	Ci/d	2.55E-11	3.79E+13	3.98E-15		
31	59Ni	59	1.34E+10	8.68E+00		63Ni	5.99E+01	Ci/d	2.02E-12	2.96E+13	2.93E-13		
32	79Se	79	7.42E+08	4.82E-01		F-	6.93E+02	lb/d	5.02E-11	1.38E+13	3.49E-14		
33	90Y	90	2.19E+14	1.42E+05		90Sr	1.10E+05	Ci/d	3.06E-09	3.61E+13	3.93E-09		
34	93Zr	93	3.22E+10	2.09E+01		Zr+4	3.65E+02	lb/d	1.60E-11	2.29E+13	9.12E-13		
35	93mNb	93	2.90E+10	1.88E+01		Zr+4	3.65E+02	lb/d	1.60E-11	2.29E+13	8.22E-13		
36	242Cm	242	9.55E+08	6.19E-01		243Cm	3.22E+01	Ci/d	1.22E-12	2.64E+13	2.34E-14		

CALCULATION SHEET

BY: E. Berrios
DATE: 03/13/03

PROJECT: WTP
JOB NO.: 24590
CALC NO.: 24590-WTP-M4C-FRP-00003
SHEET REV: A
SHEET NO.: 66

SUBJECT: Integrated Baseline Emissions Report Non-SSFM Represented Constituents Emissions Rate Estimation

	A	B	C	D	E	F	G	H	I	J	K	L	M
1	**Table B-12 PJV11 Calculation**												
2			Total feed			Representatives			PJV11	Abated PT- PJM/RFD			
3	Non-Rep Const	MW	mol/hr	lb/d			Feed Rate		Rate	PF	Non-Rep Const (g/sec)		
4	Be	9.0	5.15E+01	2.45E+01		Zr+4	3.65E+02	lb/d	2.25E-08	1.62E+10	7.93E-12		
5	CN	26.0	4.39E+02	6.03E+02		PO4-3	2.20E+03	lb/d	1.97E-07	1.12E+10	2.83E-10		
6	Co	58.9	5.45E+01	1.70E+02		60Co	1.09E+02	Ci/d	6.60E-09	1.65E+10	5.42E-11		
7	Mo	95.9	4.83E+01	2.45E+02		Bi+3	7.94E+01	lb/d	5.24E-09	1.51E+10	8.50E-11		
8	Rh	102.9	9.02E+00	4.90E+01		Zr+4	3.65E+02	lb/d	2.25E-08	1.62E+10	1.59E-11		
9	Sb	121.7	4.92E+01	3.16E+02		125Sb	4.19E+02	Ci/d	2.79E-08	1.50E+10	1.11E-10		
10	Se	78.9	4.70E+01	1.96E+02		F-	6.93E+02	lb/d	6.82E-08	1.02E+10	1.01E-10		
11	Sn	118.7	3.11E-01	1.95E+00		126Sn	2.18E+00	Ci/d	1.50E-10	1.45E+10	7.06E-13		
12	Ta	180.9	1.18E+00	1.13E+01		Zr+4	3.65E+02	lb/d	2.25E-08	1.62E+10	3.66E-12		
13	Tl	204.3	1.57E+01	1.70E+02		F-	6.93E+02	lb/d	6.82E-08	1.02E+10	8.79E-11		
14	U	238.0	4.20E+02	5.27E+03		234U	5.80E-02	Ci/d	4.24E-12	1.37E+10	2.03E-09		
15	V	50.9	4.48E+00	1.21E+01		Bi+3	7.94E+01	lb/d	5.24E-09	1.51E+10	4.19E-12		
16	W	183.8	9.31E+00	9.03E+01		Zr+4	3.65E+02	lb/d	2.25E-08	1.62E+10	2.93E-11		
17	Y	88.9	1.28E+01	6.03E+01		90Sr	1.10E+05	Ci/d	6.80E-06	1.62E+10	1.95E-11		
18			Bq/hr	Ci/d									
19	106Ru	106	2.57E+10	1.67E+01		F-	6.93E+02	lb/d	6.82E-08	1.02E+10	1.64E-09		
20	113mCd	113	8.01E+10	5.20E+01		Cd+2	2.47E+02	lb/d	2.06E-08	1.20E+10	4.34E-09		
21	134Cs	134	1.86E+10	1.20E+01		137Cs	9.26E+04	Ci/d	7.58E-06	1.22E+10	9.86E-10		
22	137mBa	137	1.93E+13	1.25E+04		137Cs	9.26E+04	Ci/d	7.58E-06	1.22E+10	1.03E-06		
23	226Ra	226	8.96E+05	5.81E-04		Zr+4	3.65E+02	lb/d	2.25E-08	1.62E+10	3.58E-14		
24	227Ac	227	4.53E+09	2.94E+00		Zr+4	3.65E+02	lb/d	2.25E-08	1.62E+10	1.81E-10		
25	228Ra	228	9.37E+08	6.08E-01		Zr+4	3.65E+02	lb/d	2.25E-08	1.62E+10	3.74E-11		
26	229Th	229	3.91E+07	2.53E-02		232Th	1.05E-02	Ci/d	7.05E-13	1.50E+10	1.69E-12		
27	231Pa	231	9.96E+09	6.46E+00		Zr+4	3.65E+02	lb/d	2.25E-08	1.62E+10	3.98E-10		
28	232U	232	8.01E+08	5.20E-01		233U	4.90E-02	Ci/d	4.23E-12	1.16E+10	4.49E-11		
29	242Pu	242	8.48E+06	5.50E-03		241Pu	2.36E+02	Ci/d	1.43E-08	1.66E+10	3.32E-13		
30	243Am	243	2.33E+08	1.51E-01		241Am	9.67E+02	Ci/d	5.84E-08	1.66E+10	9.12E-12		
31	59Ni	59	1.34E+10	8.68E+00		63Ni	5.99E+01	Ci/d	3.93E-09	1.52E+10	5.70E-10		
32	79Se	79	7.42E+08	4.82E-01		F-	6.93E+02	lb/d	6.82E-08	1.02E+10	4.74E-11		
33	90Y	90	2.19E+14	1.42E+05		90Sr	1.10E+05	Ci/d	6.80E-06	1.62E+10	8.74E-06		
34	93Zr	93	3.22E+10	2.09E+01		Zr+4	3.65E+02	lb/d	2.25E-08	1.62E+10	1.28E-09		
35	93mNb	93	2.90E+10	1.88E+01		Zr+4	3.65E+02	lb/d	2.25E-08	1.62E+10	1.16E-09		
36	242Cm	242	9.55E+08	6.19E-01		243Cm	3.22E+01	Ci/d	1.94E-09	1.66E+10	3.74E-11		

CALCULATION SHEET

BY: E. Berrios
DATE: 03/13/03

PROJECT: WTP
JOB NO.: 24590
CALC NO.: 24590-WTP-M4C-FRP-00003
SHEET REV: A
SHEET NO.: 67

SUBJECT: Integrated Baseline Emissions Report Non-SSFM Represented Constituents Emissions Rate Estimation

	A	B	C	D	E	F	G	H	I	J	K	L	M
1	**Table B-13 LVP26 Calculation**												
2			Total feed			Representatives			LVP26	Abated LAW OFFGAS			
3	Non-Rep Const	MW	mol/hr	lb/d			Feed Rate		Rate	PF	Non-Rep Const (g/sec)		
4	Be	9.0	5.15E+01	2.45E+01		Zr+4	3.65E+02	lb/d	1.37E-07	2.67E+09	4.82E-11		
5	CN	26.0	4.39E+02	6.03E+02		PO4-3	2.20E+03	lb/d	1.80E-10	1.23E+13	2.58E-13		
6	Co	58.9	5.45E+01	1.70E+02		60Co	1.09E+02	Ci/d	5.07E-10	2.14E+11	4.16E-12		
7	Mo	95.9	4.83E+01	2.45E+02		Bi+3	7.94E+01	lb/d	7.74E-09	1.03E+10	1.26E-10		
8	Rh	102.9	9.02E+00	4.90E+01		Zr+4	3.65E+02	lb/d	1.37E-07	2.67E+09	9.64E-11		
9	Sb	121.7	4.92E+01	3.16E+02		125Sb	4.19E+02	Ci/d	8.56E-08	4.90E+09	3.40E-10		
10	Se	78.9	4.70E+01	1.96E+02		F-	6.93E+02	lb/d	2.06E-06	3.37E+08	3.05E-09		
11	Sn	118.7	3.11E-01	1.95E+00		126Sn	2.18E+00	Ci/d	3.26E-11	6.69E+10	1.53E-13		
12	Ta	180.9	1.18E+00	1.13E+01		Zr+4	3.65E+02	lb/d	1.37E-07	2.67E+09	2.23E-11		
13	Tl	204.3	1.57E+01	1.70E+02		F-	6.93E+02	lb/d	2.06E-06	3.37E+08	2.65E-09		
14	U	238.0	4.20E+02	5.27E+03		234U	5.80E-02	Ci/d	1.30E-12	4.45E+10	6.24E-10		
15	V	50.9	4.48E+00	1.21E+01		Bi+3	7.94E+01	lb/d	7.74E-09	1.03E+10	6.18E-12		
16	W	183.8	9.31E+00	9.03E+01		Zr+4	3.65E+02	lb/d	1.37E-07	2.67E+09	1.78E-10		
17	Y	88.9	1.28E+01	6.03E+01		90Sr	1.10E+05	Ci/d	3.52E-07	3.13E+11	1.01E-12		
18			Bq/hr	Ci/d									
19	106Ru	106	2.57E+10	1.67E+01		F-	6.93E+02	lb/d	2.06E-06	3.37E+08	4.96E-08		
20	113mCd	113	8.01E+10	5.20E+01		Cd+2	2.47E+02	lb/d	5.52E-07	4.47E+08	1.16E-07		
21	134Cs	134	1.86E+10	1.20E+01		137Cs	9.26E+04	Ci/d	3.22E-08	2.88E+12	4.19E-12		
22	137mBa	137	1.93E+13	1.25E+04		137Cs	9.26E+04	Ci/d	3.22E-08	2.88E+12	4.36E-09		
23	226Ra	226	8.96E+05	5.81E-04		Zr+4	3.65E+02	lb/d	1.37E-07	2.67E+09	2.17E-13		
24	227Ac	227	4.53E+09	2.94E+00		Zr+4	3.65E+02	lb/d	1.37E-07	2.67E+09	1.10E-09		
25	228Ra	228	9.37E+08	6.08E-01		Zr+4	3.65E+02	lb/d	1.37E-07	2.67E+09	2.27E-10		
26	229Th	229	3.91E+07	2.53E-02		232Th	1.06E-02	Ci/d	1.21E-13	8.73E+10	2.90E-13		
27	231Pa	231	9.96E+09	6.46E+00		Zr+4	3.65E+02	lb/d	1.37E-07	2.67E+09	2.42E-09		
28	232U	232	8.01E+08	5.20E-01		233U	4.90E-02	Ci/d	2.24E-12	2.19E+10	2.38E-11		
29	242Pu	242	8.48E+06	5.50E-03		241Pu	2.36E+02	Ci/d	2.36E-11	1.00E+13	5.49E-16		
30	243Am	243	2.33E+08	1.51E-01		241Am	9.67E+02	Ci/d	8.16E-11	1.19E+13	1.27E-14		
31	59Ni	59	1.34E+10	8.68E+00		63Ni	5.99E+01	Ci/d	3.96E-09	1.51E+10	5.74E-10		
32	79Se	79	7.42E+08	4.82E-01		F-	6.93E+02	lb/d	2.06E-06	3.37E+08	1.43E-09		
33	90Y	90	2.19E+14	1.42E+05		90Sr	1.10E+05	Ci/d	3.52E-07	3.13E+11	4.52E-07		
34	93Zr	93	3.22E+10	2.09E+01		Zr+4	3.65E+02	lb/d	1.37E-07	2.67E+09	7.81E-09		
35	93mNb	93	2.90E+10	1.88E+01		Zr+4	3.65E+02	lb/d	1.37E-07	2.67E+09	7.03E-09		
36	242Cm	242	9.55E+08	6.19E-01		243Cm	3.22E+01	Ci/d	2.18E-13	1.47E+14	4.20E-15		

CALCULATION SHEET

BY: E. Berrios
DATE: 03/13/03

PROJECT: WTP
JOB NO.: 24590
CALC NO.: 24590-WTP-M4C-FRP-00003
SHEET REV: A
SHEET NO.: 68

SUBJECT: Integrated Baseline Emissions Report Non-SSFM Represented Constituents Emissions Rate Estimation

	A	B	C	D	E	F	G	H	I	J	K	L	M
1	**Table B-14 HOP33 Calculation**												
2			Total feed			Representatives			HOP33	**Abated HLW OFFGAS**			
3	Non-Rep Const	MW	mol/hr	lb/d			Feed Rate		Rate	PF	Non-Rep Const (g/sec)		
4	Be	9.0	5.15E+01	2.45E+01		Zr+4	3.65E+02	lb/d	2.21E-10	1.65E+12	7.80E-14		
5	CN	26.0	4.39E+02	6.03E+02		PO4-3	2.20E+03	lb/d	2.65E-13	8.31E+15	3.82E-16		
6	Co	58.9	5.45E+01	1.70E+02		60Co	1.09E+02	Ci/d	4.22E-10	2.58E+11	3.46E-12		
7	Mo	95.9	4.83E+01	2.45E+02		Bi+3	7.94E+01	lb/d	4.37E-10	1.82E+11	7.08E-12		
8	Rh	102.9	9.02E+00	4.90E+01		Zr+4	3.65E+02	lb/d	2.21E-10	1.65E+12	1.56E-13		
9	Sb	121.7	4.92E+01	3.16E+02		125Sb	4.19E+02	Ci/d	4.35E-09	9.65E+10	1.72E-11		
10	Se	78.9	4.70E+01	1.96E+02		F-	6.93E+02	lb/d	4.85E-12	1.43E+14	7.21E-15		
11	Sn	118.7	3.11E-01	1.95E+00		126Sn	2.18E+00	Ci/d	1.16E-12	1.87E+12	5.47E-15		
12	Ta	180.9	1.18E+00	1.13E+01		Zr+4	3.65E+02	lb/d	2.21E-10	1.65E+12	3.60E-14		
13	Tl	204.3	1.57E+01	1.70E+02		F-	6.93E+02	lb/d	4.85E-12	1.43E+14	6.25E-15		
14	U	238.0	4.20E+02	5.27E+03		234U	5.80E-02	Ci/d	2.61E-14	2.23E+12	1.25E-11		
15	V	50.9	4.48E+00	1.21E+01		Bi+3	7.94E+01	lb/d	4.37E-10	1.82E+11	3.49E-13		
16	W	183.8	9.31E+00	9.03E+01		Zr+4	3.65E+02	lb/d	2.21E-10	1.65E+12	2.88E-13		
17	Y	88.9	1.28E+01	6.03E+01		90Sr	1.10E+05	Ci/d	1.52E-07	7.28E+11	4.36E-13		
18			Bq/hr	Ci/d									
19	106Ru	106	2.57E+10	1.67E+01		F-	6.93E+02	lb/d	4.85E-12	1.43E+14	1.17E-13		
20	113mCd	113	8.01E+10	5.20E+01		Cd+2	2.47E+02	lb/d	4.70E-09	5.25E+10	9.91E-10		
21	134Cs	134	1.86E+10	1.20E+01		137Cs	9.26E+04	Ci/d	2.22E-06	4.17E+10	2.88E-10		
22	137mBa	137	1.93E+13	1.25E+04		137Cs	9.26E+04	Ci/d	2.22E-06	4.17E+10	3.00E-07		
23	226Ra	226	8.96E+05	5.81E-04		Zr+4	3.65E+02	lb/d	2.21E-10	1.65E+12	3.52E-16		
24	227Ac	227	4.53E+09	2.94E+00		Zr+4	3.65E+02	lb/d	2.21E-10	1.65E+12	1.78E-12		
25	228Ra	228	9.37E+08	6.08E-01		Zr+4	3.65E+02	lb/d	2.21E-10	1.65E+12	3.68E-13		
26	229Th	229	3.91E+07	2.53E-02		232Th	1.05E-02	Ci/d	6.04E-15	1.75E+12	1.45E-14		
27	231Pa	231	9.96E+09	6.46E+00		Zr+4	3.65E+02	lb/d	2.21E-10	1.65E+12	3.91E-12		
28	232U	232	8.01E+08	5.20E-01		233U	4.90E-02	Ci/d	9.27E-15	5.29E+12	9.83E-14		
29	242Pu	242	8.48E+06	5.50E-03		241Pu	2.36E+02	Ci/d	1.66E-10	1.43E+12	3.85E-15		
30	243Am	243	2.33E+08	1.51E-01		241Am	9.67E+02	Ci/d	6.77E-10	1.43E+12	1.06E-13		
31	59Ni	59	1.34E+10	8.68E+00		63Ni	5.99E+01	Ci/d	2.76E-10	2.17E+11	4.01E-11		
32	79Se	79	7.42E+08	4.82E-01		F-	6.93E+02	lb/d	4.85E-12	1.43E+14	3.37E-15		
33	90Y	90	2.19E+14	1.42E+05		90Sr	1.10E+05	Ci/d	1.52E-07	7.28E+11	1.95E-07		
34	93Zr	93	3.22E+10	2.09E+01		Zr+4	3.65E+02	lb/d	2.21E-10	1.65E+12	1.26E-11		
35	93mNb	93	2.90E+10	1.88E+01		Zr+4	3.65E+02	lb/d	2.21E-10	1.65E+12	1.14E-11		
36	242Cm	242	9.55E+08	6.19E-01		243Cm	3.22E+01	Ci/d	2.26E-11	1.43E+12	4.34E-13		

CALCULATION SHEET

BY: E. Berrios
DATE: 03/13/03

PROJECT: WTP
JOB NO.: 24590
CALC NO.: 24590-WTP-M4C-FRP-00003
SHEET REV: A
SHEET NO.: 69

SUBJECT: Integrated Baseline Emissions Report Non-SSFM Represented Constituents Emissions Rate Estimation

	A	B	C	D	E	F	G	H	I	J	K	L	M
1	**Table B-15 PJV34 Calculation**												
2			Total feed			Representatives			PJV34	Abated HLW PJM			
3	Non-Rep Const	MW	mol/hr	lb/d			Feed Rate		Rate	PF	Non-Rep Const (g/sec)		
4	Be	9.0	5.15E+01	2.45E+01		Zr+4	3.65E+02	lb/d	1.86E-13	1.97E+15	6.55E-17		
5	CN	26.0	4.39E+02	6.03E+02		PO4-3	2.20E+03	lb/d	1.99E-13	1.11E+16	2.86E-16		
6	Co	58.9	5.45E+01	1.70E+02		60Co	1.09E+02	Ci/d	5.73E-14	1.90E+15	4.70E-16		
7	Mo	95.9	4.83E+01	2.45E+02		Bi+3	7.94E+01	lb/d	3.83E-14	2.07E+15	6.21E-16		
8	Rh	102.9	9.02E+00	4.90E+01		Zr+4	3.65E+02	lb/d	1.86E-13	1.97E+15	1.31E-16		
9	Sb	121.7	4.92E+01	3.16E+02		125Sb	4.19E+02	Ci/d	1.99E-13	2.11E+15	7.89E-16		
10	Se	78.9	4.70E+01	1.96E+02		F-	6.93E+02	lb/d	3.16E-13	2.20E+15	4.69E-16		
11	Sn	118.7	3.11E-01	1.95E+00		126Sn	2.18E+00	Ci/d	8.85E-16	2.46E+15	4.16E-18		
12	Ta	180.9	1.18E+00	1.13E+01		Zr+4	3.65E+02	lb/d	1.86E-13	1.97E+15	3.03E-17		
13	Tl	204.3	1.57E+01	1.70E+02		F-	6.93E+02	lb/d	3.16E-13	2.20E+15	4.07E-16		
14	U	238.0	4.20E+02	5.27E+03		234U	5.80E-02	Ci/d	1.98E-17	2.93E+15	9.48E-15		
15	V	50.9	4.48E+00	1.21E+01		Bi+3	7.94E+01	lb/d	3.83E-14	2.07E+15	3.06E-17		
16	W	183.8	9.31E+00	9.03E+01		Zr+4	3.65E+02	lb/d	1.86E-13	1.97E+15	2.42E-16		
17	Y	88.9	1.28E+01	6.03E+01		90Sr	1.10E+05	Ci/d	6.10E-11	1.81E+15	1.75E-16		
18			Bq/hr	Ci/d									
19	106Ru	106	2.57E+10	1.67E+01		F-	6.93E+02	lb/d	3.16E-13	2.20E+15	7.61E-15		
20	113mCd	113	8.01E+10	5.20E+01		Cd+2	2.47E+02	lb/d	1.51E-13	1.63E+15	3.19E-14		
21	134Cs	134	1.86E+10	1.20E+01		137Cs	9.26E+04	Ci/d	6.81E-11	1.36E+15	8.86E-15		
22	137mBa	137	1.93E+13	1.25E+04		137Cs	9.26E+04	Ci/d	6.81E-11	1.36E+15	9.22E-12		
23	226Ra	226	8.96E+05	5.81E-04		Zr+4	3.65E+02	lb/d	1.86E-13	1.97E+15	2.95E-19		
24	227Ac	227	4.53E+09	2.94E+00		Zr+4	3.65E+02	lb/d	1.86E-13	1.97E+15	1.49E-15		
25	228Ra	228	9.37E+08	6.08E-01		Zr+4	3.65E+02	lb/d	1.86E-13	1.97E+15	3.09E-16		
26	229Th	229	3.91E+07	2.53E-02		232Th	1.05E-02	Ci/d	4.59E-18	2.30E+15	1.10E-17		
27	231Pa	231	9.96E+09	6.46E+00		Zr+4	3.65E+02	lb/d	1.86E-13	1.97E+15	3.28E-15		
28	232U	232	8.01E+08	5.20E-01		233U	4.90E-02	Ci/d	7.05E-18	6.95E+15	7.48E-17		
29	242Pu	242	8.48E+06	5.50E-03		241Pu	2.36E+02	Ci/d	1.26E-13	1.88E+15	2.93E-18		
30	243Am	243	2.33E+08	1.51E-01		241Am	9.67E+02	Ci/d	5.15E-13	1.88E+15	8.04E-17		
31	59Ni	59	1.34E+10	8.68E+00		63Ni	5.99E+01	Ci/d	2.97E-14	2.01E+15	4.31E-15		
32	79Se	79	7.42E+08	4.82E-01		F-	6.93E+02	lb/d	3.16E-13	2.20E+15	2.19E-16		
33	90Y	90	2.19E+14	1.42E+05		90Sr	1.10E+05	Ci/d	6.10E-11	1.81E+15	7.84E-11		
34	93Zr	93	3.22E+10	2.09E+01		Zr+4	3.65E+02	lb/d	1.86E-13	1.97E+15	1.06E-14		
35	93mNb	93	2.90E+10	1.88E+01		Zr+4	3.65E+02	lb/d	1.86E-13	1.97E+15	9.56E-15		
36	242Cm	242	9.55E+08	6.19E-01		243Cm	3.22E+01	Ci/d	1.72E-14	1.88E+15	3.30E-16		

D

Appendix D
Calculation: Updated Emissions Run Feed Vector

24590-WTP-M4C-FRP-00001, Rev 0A

ISSUED BY
RPP-WTP PDC
KLD 12-26-02
INIT DATE

Calculation Cover Sheet

RIVER PROTECTION PROJECT-WASTE TREATMENT PLANT		JOB NO.:	24590
CALC NO.	24590-WTP-M4C-FRP-00001	GROUP	Process Operations
SUBJECT	Updated Emissions Run Feed Vector		

CALCULATION STATUS DESIGNATION			
☒ PRELIMINARY	☐ COMMITTED	☐ CONFIRMED	
☐ SUPERSEDED		☐ VOIDED	

COMPUTER PROGRAM/TYPE	N/A	QAS	SCP	PROGRAM NAME	VERSION/RELEASE NO.
	☒	☐ YES ☐ NO	☐ YES ☐ NO		

Notes/Comments

This calculation is a complete re-write of Revision 0 therefore no revision bars are used.

Calculations were performed on a Personal Computer using the software Excel 97 SR-2.

NO.	REASON FOR REVISION	TOTAL NO OF SHEETS	LAST SHEET NO.	BY	CHECKED	APPROVED/ ACCEPTED	DATE
0A	Update the feed vector	137	137	E. Berrios	T. Lix/J. Tadlock	O. Block	12-18-02
0	Initial Issue	43	43	E. Berrios	J. Reynolds	O. Block	04/01/02

RECORD OF REVISIONS

Contents

1 Objective 2
2 Inputs 2
2.1 Design Inputs 2
2.2 Criteria 7
3 Background 7
4 Applicable Codes and Standards 8
5 Methodology 8
5.1 LAW 8
5.2 HLW 8
6 Assumptions 9
7 Calculations 9
7.1 LAW 9
7.2 HLW 13
8 Results and Conclusions 16
9 References 19
10 Attachments 19
Appendix A LAW Calculations 20
Appendix B HLW Calculations 40
Appendix C LAW BBI Data 57
Appendix D HLW BBI Data 89

LIST OF TABLES

Table A-1 LAW Chemical Analytes Feed Quantities in Kg 21
Table A-2 LAW Chemical Analytes Feed Quantities in moles 23
Table A-3 LAW Radionuclide Feed Quantities in Curies 25
Table A-4 LAW Chemical Analytes Comparison with SOW Maximums 27
Table A-5 LAW Radionuclide Comparison with SOW Maximums 29
Table A-6 LAW Chemical Analytes Feed Charge Balance 30
Table A-7 LAW Radionuclide Feed Charge Balance 32
Table A-8 Adjustment of Chemical Analytes Positive Charges 34

Table A-9 Adjustment of Radionuclide Positive Charges 36
Table A-10 LAW Chemical Analytes Emissions Feed Quantities 38
Table A-11 LAW Radionuclide Emissions Feed Quantities 39
Table B-1 HLW Chemical Analytes Feed Quantities in kg 41
Table B-2 HLW Chemical Analytes Feed Quantities in moles 43
Table B-3 HLW Radionuclide Feed Quantities in Curies 45
Table B-4 HLW Waste Oxide Mass Calculation 47
Table B-5 Chemical Analytes Feed Quantity Comparison 49
Table B-6 Radionuclides Feed Quantity Comparison 51
Table B-7 HLW Chemical Analytes Charge Balance 52
Table B-8 HLW Radionuclides Charge Balance 54
Table B-9 HLW Chemical Analytes Emissions Feed 55
Table B-10 HLW Radionuclide Emissions Feed 56

1 Objective

The objective of this calculation is to update the Steady State Flowsheet Model (ACM) feed vector for the updated revision of the *Integrated Emissions Baseline Report for the River Protection Project Waste Treatment Plant* (Cook 2001).

2 Inputs

2.1 Design Inputs

Rev. 1 of the Emissions Report (Cook 2001) recommended that the highest concentration of the constituents be used in the feed vector in order to obtain a bounding emissions estimate for the Waste Treatment Plant (WTP). The feed vector used was based on several sources which included the Tank Farm Contractor Utilization Plan (TFCOUP), the Best Basis Inventory (BBI), and the Aspen model. It was decided by the Emissions Feed Vector Task team that only one source of information should be used to determine the feed vector. It was agreed that this source is the BBI data (CCN# 044663). It was also decided that tanks to be evaluated to derive the feed vector are those scheduled to be processed during Phase I as stated in the System Plan Run 1C document (Allen 2002). The tanks in scope are:

LAW
- AP-101 supernate
- AZ-101 supernate
- AZ-102 supernate
- AN-102 supernate
- AN-104 dissolved solids (salt cake) and supernate
- AN-107 supernate

- AN-105 dissolved solids (salt cake) and supernate
- SY-101 supernate
- AN-103 dissolved solids (salt cake) and supernate
- AW-101 dissolved solids (salt cake) and supernate
- AP-104 supernate

HLW
- AZ-101 solids
- AZ-102 solids
- AY-102 solids
- C-106 solids
- AY-101 solids
- C-104 solids
- SY-102 solids
- C-107 solids
- AW-104 solids (sludge portion only)

Inventory from each tank is located in the BBI website http://twins.pnl.gov:8001/data/datamenu.htm. The inventory is located under the subject area called Best Basis Inventory

Part of this calculation requires comparing BBI results to contract maximums. For the LAW feed, the following Statement of Work (SOW) maximums, based on the *WTP Statement of Work* (DE-AC27-01RV14136) Specification 7, Tables TS-7.1 and TS-7.2, were used:

LAW Contract Maximums

Chemical Analyte	**mol/mol Na**
Al	2.5E-01
Ba	1.0E-04
Ca	4.0E-02
Cd	4.0E-03
Cl	8.9E-02
Cr	2.0E-02
F	2.0E-01
Fe	1.0E-02
Hg	1.4E-05
K	1.8E-01
La	8.3E-05
Ni	3.0E-03
NO_2	3.8E-01
NO_3	8.0E-01
Pb	6.8E-04
PO_4	1.3E-01
SO_4	7.0E-02
TIC as CO_3	3.0E-01
TOC as oxalate	5.0E-01
U	1.2E-03
Radionuclide	**Bq/mol Na**

CALCULATION SHEET

PROJECT: RPP-WTP
JOB NO.: 24590
CALC NO.: 24590-WTP-M4C-FRP-00001
SHEET REV: 0A
SHEET NO.: 4

BY: E. Berrios
DATE: 12/04/02

SUBJECT: Updated Emissions Run Feed Vector

Chemical Analyte	mol/mol Na
TRU*	4.8E+05
^{137}Cs	2.0E+10
^{90}Sr	8.0E+08
^{99}Tc	7.1E+06
^{60}Co	3.7E+05
^{154}Eu	4.3E+06

* TRU is defined as alpha-emitting radionuclides with an atomic number greater than 92 with half-life greater than 10 years.

For the HLW feed, the SOW maximums are based on grams per 100 grams of non-volatile waste oxides. SOW maximums are available for various non-volatile elements, volatile components, and radionuclides. The HLW SOW maximums, per the *WTP Statement of Work* (DE-AC27-01RV14136) Specification 8, Tables TS-8.1, TS-8.2, TS-8.3, and TS-8.4 are:

HLW Non-Volatile Elements SOW Maximums

Non-Volatile Element	Maximum (grams / 100 grams waste oxides)	Non-Volatile Element	Maximum (grams / 100 grams waste oxides)
As	0.16	Zn	0.42
B	1.3	Ag	0.55
Be	0.065	Al	14
Ce	0.81	Ba	4.5
Co	0.45	Bi	2.8
Cs	0.58	Ca	7.1
Cu	0.48	Cd	4.5
Hg	0.1	Cr	0.68
La	2.6	F	3.5
Li	0.14	Fe	29
Mn	6.5	K	1.3
Mo	0.65	Mg	2.1
Nd	1.7	Na	19
Pr	0.35	Th	5.0
Pu	0.054	Ni	2.4
Rb	0.19	P	1.7
Sb	0.84	Pb	1.1
Se	0.52	Pd	0.13
Sr	0.52	Rh	0.13
Ta	0.03	Ru	0.35
Tc	0.26	S	0.65
Te	0.13	Si	19
Tl	0.45	Ti	1.3
V	0.032	U	14
W	0.24	Zr	15
Y	0.16		

CALCULATION SHEET

PROJECT: RPP-WTP
JOB NO.: 24590
CALC NO.: 24590-WTP-M4C-FRP-00001
SHEET REV: 0A
SHEET NO.: 5

BY: E. Berrios
DATE: 12/04/02

SUBJECT: Updated Emissions Run Feed Vector

HLW Volatile Components SOW Maximums

Volatile Components	Maximum (grams / 100 grams waste oxides)
Cl	0.33
CO_3^{-2}	30
NO_2	36 (total NO_2/NO_3) as NO_3
NO_3	
TOC	11
CN	1.6
NH_3	1.6

HLW Radionuclides SOW Maximums

Radionuclide	Maximum (Ci/100 grams waste oxide)	Radionuclide	Maximum (Ci/100 grams waste oxide)	Radionuclide	Maximum (Ci/100 grams waste oxide)
3H	6.5E-05	129I	2.9E-07	237Np	7.4E-05
14C	6.5E-06	137Cs	1.5E+00	238Pu	3.5E-04
60Co	1.0E-02	152Eu	4.8E-04	239Pu	3.1E-03
90Sr	1.0E+01	154Eu	5.2E-02	241Pu	2.2E-02
99Tc	1.5E-02	155Eu	2.9E-02	241Am	9.0E-02
125Sb	3.2E-02	233U	9.0E-07	243+244Cm	3.0E-03
126Sn	1.5E-04	235U	2.5E-07		

For the purposes of charge balancing the feed vector, the following element charges were used. Only the elements tracked on the Steady State Flowsheet Model were charged balanced. Charges are based on the CRC Handbook 71st Edition (CRC 1991).

Component Charges

Component	Charge	Component	Charge	Component	Charge
Ag	1	NO_2	-1	137Cs	1
Al	3	NO_3	-1	14C	4
As	5	OH	-1	151Sm	3
B	3	Oxalate	-2	152Eu	3
Ba	2	Pb	2	154Eu	3
Be	2	Pd	2	155Eu	3
Bi	3	PO_4	-3	232Th	4
Ca	2	Rb	1	233U	6
Cd	2	Rh	3	234U	6
Ce	3	Ru	4	235U	6
Cl	-1	Sb	3	236U	6
CN	-1	Se	4	237Np	4
CO_3	-2	Ta	5	238Pu	4
Co	3	Si	4	238U	6
Cr	3	SO_4	-2	239Pu	4
Cu	2	Sr	2	240Pu	4
F	-1	Te	4	241Pu	4
Fe	3	Th	4	241Am	3
Hg	2	Ti	4	243Cm	3

CALCULATION SHEET

PROJECT: RPP-WTP
JOB NO.: 24590
CALC NO.: 24590-WTP-M4C-FRP-00001
SHEET REV: 0A
SHEET NO.: 6

BY: E. Berrios
DATE: 12/04/02

SUBJECT: Updated Emissions Run Feed Vector

Component	Charge	Component	Charge	Component	Charge
K	1	Tl	5	244Cm	3
La	3	V	3	3H	1
Li	1	W	6	60Co	3
Mg	2	Y	3	63Ni	2
Mn	4	Zn	2	90Sr	2
Mo	6	Zr	4	99Tc	7
Na	1	125Sb	3		
Nd	3	126Sn	2		
Ni	2	129I	-1		

For the radionuclides, the activity per mole ratios used during charge balancing were based on the *Tank by Tank Feed Composition for Steady State Mass Balance* calculation (Capps 2002). Only the ratios for the radionuclides used during the charge balance process were used. The activity per mole ratios are:

Radionuclide	Ci/kmol	Radionuclide	Ci/kmol
125Sb	1.30E+08	237Np	1.67E+02
126Sn	1.43E+03	238Pu	4.08E+06
129I	2.28E+01	238U	8.00E-02
137Cs	1.19E+07	239Pu	1.48E+04
14C	6.26E+04	240Pu	5.45E+04
151Sm	3.97E+06	241Am	8.26E+05
152Eu	2.64E+07	241Pu	2.48E+07
154Eu	4.16E+07	243Cm	1.23E+07
155Eu	7.53E+07	244Cm	2.62E+07
232Th	2.55E-02	3H	2.90E+07
233U	2.25E+03	60Co	6.78E+07
234U	1.45E+03	63Ni	3.57E+06
235U	5.08E-01	90Sr	1.24E+07
236U	1.52E+01	99Tc	1.68E+03

Molecular weights of components were based on the CRC Handbook 71st Edition (CRC 1991). These are:

Analyte	MW g/mol	Analyte	MW g/mol
Ag	107.8	NO2	46.0
Al	26.9	NO3	62.0
As	74.9	OH	17.0
B	10.8	Oxalate	88.0
Ba	137.3	Pb	207.2
Be	9.0	Pd	105.4
Bi	208.9	PO4	94.9
Ca	40.0	Pr	140.9
Cd	112.4	Rb	85.5
Ce	140.1	Rh	102.9
Cl	35.4	Ru	101.1
CN	26.0	Sb	121.7

Analyte	MW g/mol	Analyte	MW g/mol
Co	58.9	Se	78.9
Cr	51.9	Si	28.1
Cu	63.5	SO4	96.1
F	18.9	Sr	87.6
Fe	55.8	Ta	180.9
Hg	200.6	Te	127.6
K	39.1	Th	232.0
La	138.9	Ti	47.9
Li	6.9	TIC as CO3	60.0
Mg	24.3	Tl	204.4
Mn	54.9	U(total)	238.0
Mo	95.9	V	50.9
Na	22.9	W	183.9
Nd	144.2	Y	88.9
NH3	17	Zn	65.4
Ni	58.7	Zr	91.2

2.2 Criteria

The following criteria were used in this calculation to develop the emissions feed vector:

- Constituents feed quantity selected is the highest value from all the tanks evaluated.
- SOW maximums shall be selected for all constituents that the SOW indicated has a maximum. Otherwise the BBI information is used.
- The LAW transuranics are defined as: ^{237}Np, ^{238}Pu, ^{239}Pu, ^{240}Pu, ^{241}Am, ^{241}Pu, ^{242}Cm, ^{242}Pu, ^{243}Am, ^{243}Cm, and ^{244}Cm, per the contract specifications.
- For the HLW feed contract maximum calculations, the non-volatile compounds are all those in the feed except Cl, CN, F, NH_3, NO_2, NO_3, OH, oxalate, PO_4, SO_4, and CO_3.

3 Background

The previous emissions profiles for the Waste Treatment Plant (WTP) have been based on a feed vector generated from various sources. For the profile generated in the *Integrated Emissions Baseline Report for the River Protection Project Waste Treatment Plant* (Cook 2001), the feed vector was based on data from the Best Basis Inventory, data from the ACM model, and the TFCOUP Rev. 2.

In March 2002, an update to the emissions profile was generated and can be found in the *Integrated Emissions Baseline Report Update* (Berríos 2002). The feed vector for this profile was based on a comparison between what was used in the *Integrated Emissions Baseline Report for the River Protection Project Waste Treatment Plant* (Cook 2001) and data from the TFCOUP Rev. 3a. The highest constituent concentration between the two sources was selected as the preferred feed quantity.

In May 2002, an Emissions Task Team was developed to resolve issues pertaining to the basis of the WTP emissions profiles. This team was comprised of personnel from Process Engineering, Process Technology, Environmental Safety and Health, and Research and Technology. One of the issues that required evaluation was the feed vector (CCN# 034316). The required action for the team was to arrive to a commonly agreed feed vector

for inorganic constituents that would be representative of the WTP feed yet be adequately conservative for emissions estimates. The Emissions Task Team decided to maintain a single data source for developing the emissions feed vector. This source is the BBI. Thus, the emissions feed vector requires to be updated. This calculation arrives at the new feed vector to be used for future emissions profiles.

It should be noted that the BBI data was only retrieved for the tanks being processed during the Phase I of the WTP. If at any point, the tanks to be processed through Phase I changes, this calculation will require to be updated.

4 Applicable Codes and Standards

No codes and standards were used in this calculation.

5 Methodology

The following methodology was used in this calculation.

5.1 LAW

- Data for the LAW tanks was obtained from the Best Basis Inventory on the web site http://twins.pnl.gov:8001/twins.htm. This data was downloaded on September 2002 and can be found in Appendix C sorted by tanks. Units of this data are:
  - Chemical Analytes: kg
  - Radionuclides: Ci
- For inventories that included supernatant and salt cake, both numbers were added together to get a total constituent inventory.
- Chemical analyte weight was converted to moles by multiplying by 1000 grams/kg and dividing by the molecular weight of the analyte in grams/mol. The maximum concentration in moles per constituents was then selected, except for Na. Reason being that the low sodium moles will give the highest concentration when based on mol/mol of Na.
- Radionuclides maximum activity in Ci was selected per constituent.
- Statement of Work maximums were used for constituents that had one specified. Otherwise, the maximum BBI data was used.
- Once the new feed quantities were selected, they were charge balanced. For this process, only the constituents tracked on the Steady State Flowsheet Model were charge balanced. If the final overall charge was positive, then the amount of negative charges was adjusted to counteract the positive balance. If the final overall charge was negative, then the positive charges were adjusted to counteract the negative balance.
- After the charges were balanced, the final feed vector was converted to the units used by the Steady State Flowsheet Model. Chemical analytes were converted to a ratio of mol/mol Na and the radionuclides were converted to a ratio of Bq/mol Na.

5.2 HLW

- Data for the HLW tanks was obtained from the Best Basis Inventory on the web site http://twins.pnl.gov:8001/twins.htm. This data was downloaded on September 2002 and can be found in Appendix D sorted by tanks. Units for this data are:
  - Chemical Analyte: kg
  - Radionuclides: Ci

- For analytes that have several data points, these were added together to obtain a total inventory for the analyte.
- Chemical analyte weight was converted to moles by multiplying by 1000 grams/kg and dividing by the molecular weight of the analyte in grams/mol. The maximum concentration in moles per constituents was then selected, except for Na. Reason being that the low sodium moles will give the highest concentration when based on mols/mol of Na.
- Radionuclides maximum activity in Ci was selected per constituent.
- Statement of Work maximums were used for constituents that had one specified. Otherwise, the maximum BBI data was used. In order to determine to the SOW maximum, the amount of total non-volatile oxides had to be calculated. Once this number was obtained, the feed quantity required, per the SOW maximum, was calculated.
- Once the new feed quantities were selected, they were charge balanced. For this process, only the constituents tracked on the Steady State Flowsheet Model were charged balanced. If the final overall charge was positive, then the amount of negative charges adjusted to counteract the positive balance. If the final overall charge was negative, then the positive charges were adjusted to counteract the negative balance.
- After the charges were balanced, the final feed vector was converted to the units used by the Steady State Flowsheet Model. Chemical analytes were converted to a ratio of mol/mol Na and the radionuclides were converted to a ratio of Bq/mol Na.

6 Assumptions

- For compounds with multiple valance states, the most common valance state (or state that is most appropriate for high level waste) has been assumed.
- Only WTP Phase I tanks will be processed with the new WTP 2+2 configuration. If at a later time, the feed sequence for WTP changes and new tanks are added to the scope of the project, then this calculation will be revised to include the inventories of the new added tanks.

7 Calculations

These calculations were performed with a Microsoft Excel® 97 spreadsheet on a Compaq PC workstation. A detail calculation of each step is presented in this section for at least one constituent. The rest of the calculations are presented in the spreadsheets found in Appendix A for LAW and Appendix B for HLW.

7.1 LAW

7.1.1 Data Collection

The spreadsheet for the LAW portion of the calculation can be located in Appendix A. Table A-1 shows the raw data from the BBI for the chemical analytes in kilograms. This data was then converted to moles by multiplying by 1000 g/kg and dividing by the constituent's molecular weight in g/mole. Silver is used as an example:

Ag: 20.9 kg * 1000 g / kg * 1 mole / 107.9 g = 194 mole Ag

Table A-2 shows the data in moles for all chemical analytes. The highest feed quantity for each constituent was then selected except for Na. The reason being is that the lowest Na concentration would give the highest constituent concentration based on moles per moles of Na (mol/mol Na). The last column on Table A-2 shows the selected feed in units of mol.

For the radionuclides, the raw data from BBI is presented in Table A-3. The maximum activity, in Ci, per constituent was selected and is shown in the last column of the table.

7.1.2 Comparison with SOW Maximum

The selected chemical analytes and radionuclide feed quantities were then compared to the SOW maximums. For constituents with SOW maximum, this amount was selected for their feed concentration. BBI calculated feed quantity was used for all other constituents without SOW maximum. For chemical analytes, SOW maximums are given in terms of mol/mol Na, therefore data was converted to these units to do the comparison. The chemical analytes amount in moles was divided by the moles of Na to obtain mol/mol Na. For example,

Ag
mol: 9.04E+02 moles
Na: 7.48E+06 moles
Concentration = 9.04E+02 / 7.48E+06 = 1.21E-04 mol/mol Na

The amount in mol/mol Na was then compared to the SOW maximum. Examples for aliminum and calcium are shown below.

Al
mol: 8.07E+06 mol
Concentration = 8.07E+06 mol Al / 7.48E+06 mol Na = 1.08 mol/mol Na
SOW maximum = 0.25 mol/mol Na
Concentration selected = SOW maximum = 0.25 mol/mol Na

Ca
mol: 5.09E+04 mol
Concentration = 5.09E+04 mol Ca / 7.48E+06 mol Na = 6.8E-03 mol/mol Na
SOW maximum = 4.0E-02 mol/mol Na
Concentration selected = SOW maximum = 4.0E-02 mol/mol Na

For constituents without SOW maximums, the BBI feed quantity was used. Table A-4 shows the calculation for all the constituents. The final selected amounts were then converted back to moles by multiplying by the total Na moles (7.48E+06 moles) to facilitate the feed charge balancing.

For the radionuclides, the SOW maximum is given in terms of Bq/mol Na, therefore data was converted to these units for comparison. The Ci amount was converted to Bq by multiplying by 3.7E+10 Bq/Ci and then dividing by the moles of Na (7.48E+06 moles) to get the units of Bq/mol Na. Constituents without SOW maximums were kept at the BBI feed quantity value. For example,

^{106}Ru: 3.05E-04 Ci * 3.7E+10 Bq/Ci * 1 / 7.48E+06 moles Na = 1.5 Bq/mol Na

The calculated amount in Bq/mol Na was then compared to the SOW maximum. If the SOW maximum was lower than the calculated number, then the SOW maximum was selected. For constituents without SOW maximum, the calculated value was selected. Examples are shown below.

^{137}Cs: 5.65E+06 Ci * 3.7E+10 Bq/Ci * 1 / 7.48E+06 moles Na = 2.8E+10 Bq/mol Na
SOW maximum = 2.0E+10 Bq/mol Na
Concentration selected = SOW maximum = 2.0E+10 Bq/mol Na

Table A-5 shows the calculation for all the radionuclides. The selected amounts were then converted to Ci to facilitate in the feed charge balancing. Conversion to Ci was done by multiplying the Bq/mol Na by 1 Ci / 3.7E+10 Bq and then by the moles of Na (7.48E+06 moles). For example,

^{106}Ru: 1.51 Bq/mol Na * 1 Ci / 3.7E+10 Bq * 7.48E+06 mol Na = 3.05E-04 Ci

For the transuranics, the SOW maximum is given as a whole amount of 4.80E+05 Bq/mol Na. The LAW transuranics are defined as ^{237}Np, ^{238}Pu, ^{239}Pu, ^{240}Pu, ^{241}Am, ^{241}Pu, ^{242}Cm, ^{242}Pu, ^{243}Am, ^{243}Cm, and ^{244}Cm. The sum of all these in Bq/mol Na were added together to determine the overall concentration (Table A-5 shows the amounts of the radionuclides in Bq/mol Na). The summation is:
^{237}Np = 2.75E+04 Bq/mol Na
^{238}Pu = 7.27E+04 Bq/mol Na
^{239}Pu = 8.61E+05 Bq/mol Na
^{240}Pu = 1.52E+05 Bq/mol Na
^{241}Am = 1.22E+07 Bq/mol Na
^{241}Pu = 3.58E+06 Bq/mol Na
^{242}Cm = 3.08E+04 Bq/mol Na
^{242}Pu = 1.91E+01 Bq/mol Na
^{243}Am = 5.00E+02 Bq/mol Na
^{243}Cm = 2.56E+03 Bq/mol Na
^{244}Cm = 1.78E+04 Bq/mol Na
Total = 1.70E+07 Bq/mol Na
The total amount is higher than the SOW maximum, therefore the SOW maximum will be used as the feed quantity. To calculate the feed quantity based on the SOW maximum, the total concentration was divided equally between all the transuranics. This was done by dividing the feed quantity by the total feed quantity and then multiplying by the SOW maximum.
^{237}Np = 2.75E+04 Bq/mol Na / 1.7E+07 Bq/mol Na * 4.80E+05 Bq/mol Na = 7.78E+02 Bq/mol Na
^{238}Pu = 7.27E+04 Bq/mol Na / 1.7E+07 Bq/mol Na * 4.80E+05 Bq/mol Na = 2.06E+03 Bq/mol Na
^{239}Pu = 8.61E+05 Bq/mol Na / 1.7E+07 Bq/mol Na * 4.80E+05 Bq/mol Na = 2.44E+04 Bq/mol Na
^{240}Pu = 1.52E+05 Bq/mol Na / 1.7E+07 Bq/mol Na * 4.80E+05 Bq/mol Na = 4.31E+03 Bq/mol Na
^{241}Am = 1.22E+07 Bq/mol Na / 1.7E+07 Bq/mol Na * 4.80E+05 Bq/mol Na = 3.46E+05 Bq/mol Na
^{241}Pu = 3.58E+06 Bq/mol Na / 1.7E+07 Bq/mol Na * 4.80E+05 Bq/mol Na = 1.01E+05 Bq/mol Na
^{242}Cm = 3.08E+04 Bq/mol Na / 1.7E+07 Bq/mol Na * 4.80E+05 Bq/mol Na = 8.72E+02 Bq/mol Na
^{242}Pu = 1.91E+01 Bq/mol Na / 1.7E+07 Bq/mol Na * 4.80E+05 Bq/mol Na = 5.42E-01 Bq/mol Na
^{243}Am = 5.00E+02 Bq/mol Na / 1.7E+07 Bq/mol Na * 4.80E+05 Bq/mol Na = 1.41E+01 Bq/mol Na
^{243}Cm = 2.56E+03 Bq/mol Na / 1.7E+07 Bq/mol Na * 4.80E+05 Bq/mol Na = 7.25E+01 Bq/mol Na
^{244}Cm = 1.78E+04 Bq/mol Na / 1.7E+07 Bq/mol Na * 4.80E+05 Bq/mol Na = 5.04E+02 Bq/mol Na
To verify the calculation, the new concentrations were added together to make sure they matched the SOW maximum. Total sum is 4.80E+05 Bq/mol Na which is the same as the SOW maximum.

7.1.3 Feed Charge Balance

Once the final feed quantities were determined, the feed was charge balanced. Only the constituents that are tracked on the Steady State Flowsheet Model were charge balanced.

For the chemical analytes, the feed quantity in moles was multiplied by the charge to get the total constituent's charge. For example,

Ag
9.04E+02 moles * 1 = 9.04E+02 moles

After all the charges were calculated they were added together. Table A-6 shows the charge balance calculation for the chemical analytes. Constituents that have a charge of zero (0) are not tracked in the Steady State Flowsheet Model. Total charge for chemical analytes is -27,791,598.

For the radionuclides, the Ci amount was converted to mol by multiplying by the activity per mole ratio. The activity per mole ratio used are the ones presented in Section 2.0. For example,

^{125}Sb
Feed quantity: 4.02E+03 Ci
Activity per mole = 1.30E+08 Ci/kmol
Amount in moles = 4.02E+03 Ci * 1 kmol / 1.30E+08 Ci * 1000 mol / kmol = 3.09E-02 mol

The amount of the radionuclide in moles was then multiplied by the charge to get the total charge for the constituent.

^{125}Sb
Total charge = 3.09E-02 mol * 3 = 9.28E-02

The same calculation was performed for all the radionuclides tracked in the Steady State Flowsheet Model. This calculation can be found in Table A-7. After all the charges were calculated, they were added together to get the total charge. The total charge for all radionuclides is 92,071.

The total charges for radionuclides and chemical analytes were then added together to obtain the overall charge of the feed:

-32,652,468 (chemical analytes charge) + 92,120 (radionuclides charge) = -32,560,348

Being highly negative, the amount of Na was then adjusted to counteract the positive charge. In order to add this much Na, all the positive charges were also readjusted to keep the concentrations selected. To do this, all the positive charges were added together (both chemical and radionuclide). This total positive charge is 16,824,502. The new mole amount needed per constituent was calculated by multiplying the original moles charge by the new amount of positive mole charges needed divided by the total positive mole charges. For example,

Ag
Original mole charges = 904
New mole charges = 904 * 32,652,468 / 16,824,502 = 1.75E+03 new positive mole charges of Ag

This value was then converted back to actual moles by dividing by the charge of the analyte.

Ag = 1.75E+03 / +1 = 1.75E+03 moles of Ag needed
Based on this new ratio, the new moles of Na are:
7.48E+06 moles Na * 32,652,468 / 16,824,502 = 1.45E+07 / +1 = 1.45E+07 new moles of Na

The new mol/mol Na concentration are then based on this new Na amount. Therefore for Ag:

Ag: 1.75E+03 / 1.45E+07 = 1.21E-04 mol/mol Na

This concentration is equivalent to the one previously calculated before the charge balance thereby confirming that the ratio was applied correctly. Table A-8 shows the new ratio adjustment process for the chemical analytes. Table A-9 shows the adjustment for the radionuclides.

The chemical analyte feed vector for LAW for emissions purposes is shown in Table A-10. Table A-11 shows the finalized radionuclide feed vector for LAW.

7.2 HLW

7.2.1 Data Collection

The spreadsheet for the HLW portion of the calculation can be located in Appendix B. Table B-1 shows the raw data from the BBI for the chemical analytes in kilograms. This data was then converted to moles by multiplying by 1000 g/kg and dividing by the molecular weight in g/mole. Silver is used as an example:

Ag: 117 kg * 1000 g / kg * 1 mole / 107.9 g = 1,080 mole Ag

Table B-2 shows the data in moles for all chemical analytes. The highest amount for each constituent was then selected except for Na. The reason being is that the lowest Na concentration would give the highest constituent concentration based on moles per moles of Na (mol/mol Na). The last column on Table B-2 shows the selected feed.

For the radionuclides, the raw data from BBI is presented in Table B-3. The maximum activity, in Ci, per each constituent was selected and is shown in the last column of the table.

7.2.2 Comparison with SOW Maximums

The selected chemical analytes and radionuclide feeds were then compared to the SOW maximums. For constituents with SOW maximum, this amount was selected for their feed concentration. For constituents without a SOW maximum, the selected feed was used. To determine the SOW maximum, first the amount of non-volatile oxides had to be calculated. Non-volatile compounds include all components except Cl, CN, F, NH_3, NO_2, NO_3, OH, oxalate, PO_4, SO_4, and CO_3. Table B-4 shows the calculation of the total oxides mass.

Silver is used as an example to demonstrate the calculation process. First, the amount of each constituent per mole was converted to grams by multiplying by the molecular weight.

Ag: 9.82E+03 moles * 107.87 g / mol = 1.06E+06 grams

The charge per each constituent was then obtained as shown in Section 2.0. In order to calculate the amount of oxygen needed to form the oxides, the constituent charge was divided by the charge of oxygen.

Ag (O needed)
charge = 1
Oxygen needed = 1/2 = 0.5

The mass of oxygen associated with each constituent in the oxide form is then the number of oxygens ratio times the moles of the constituent times the molecular weight of oxygen (16 g/mole).

Ag (Mass of oxygen)
9.82E+03 moles Ag * 0.5 moles O / moles Ag * 16 g O / mole O = 7.86E+04 g O

This process was then repeated for all the constituents. Once all the numbers were calculated, the total amount of oxides in grams was calculated by adding all the constituents' weights together with the oxygen weight.

Total mass of constituents: 4.36E+08 grams
Total mass of oxygen: 2.0E+08 grams
Total mass of oxides: 4.36E+08 grams + 2.0E+08 grams = 6.36E+08 grams

The SOW maximum feed was then calculated by multiplying the constituents SOW maximum ratio by the total mass of oxides and dividing by 100. SOW maximum ratios used are those presented in Section 2.0.

Ag:
Total mass oxides = 6.36E+08 grams
SOW maximum ratio = 0.55 / 100 g of oxides
SOW maximum feed quantity = 6.36E+08 * 0.55/100 = 3.50E+06 grams

The calculated SOW maximum feed quantity was then compared to the selected feed quantity. If the selected feed quantity was higher than the SOW maximum, then the SOW maximum was used. For constituents without a SOW maximum, the selected feed quantity was selected as the emissions feed.

Ag:
SOW maximum feed quantity = 3.50E+06 grams
Actual feed quantity = 1.06E+06 grams
Feed quantity selected = SOW maximuml = 3.50E+06 grams

An example where SOW maximum feed quantity was selected is Chromium.

Cr:
SOW maximum feed quantity = 4.32E+06 grams
Actual feed quantity = 1.34E+07 grams
Feed quantity selected = SOW maximum = 4.32E+06 grams

Table B-5 shows the rest of the comparisons and the selected feed in grams for HLW chemical analytes.

For the radionuclides a similar approach was used. The SOW maximum Ci feed was calculated by multiplying the total oxide mass by the SOW maximum ratio and dividing by 100. ^{125}Sb is usd as an example:

^{125}Sb
SOW maximum ratio: 3.20E-02 Ci / 100 grams of oxides
Total oxide mass: 6.36E+08 grams
SOW maximum feed quantity = 6.36E+08 * 3.20E-02 / 100 = 2.03E+05 Ci

This SOW maximum feed quantity was then compared to the selected feed quantity.

^{125}Sb
SOW maximum feed quantity = 2.03E+05 Ci
Actual feed quantity = 6.18E+03 Ci

Selected feed quantity = 2.03E+05 Ci

Table B-6 shows the rest of the calculation for the remaining radionuclides.

7.2.3 Feed Charge Balance

Once the final feed quantities were determined, the feed was charge balanced. Only the constituents that are tracked on the Steady State Flowsheet Model were charge balanced for the purposes of this calculation.

For the chemical analytes, the feed quantity in moles was multiplied by the charge to get the total constituent's charge. For example,

Ag
3.24E+04 moles * 1 = 3.24E+04 moles

After all the charges were calculated they were added together. Table B-7 shows the charge balance calculation for the chemical analytes. Constituents that have a charge of zero (0) are not tracked in the Steady State Flowsheet Model.

For the radionuclides, the Ci amount was converted to mol by multiplying by the activity per mole ratio. The activity per mole ratio used are the ones presented in Section 2.0. For example,

^{125}Sb
Feed quantity: 2.03E+05 Ci
Activity per mole = 1.30E+08 Ci/kmol
Amount in moles = 2.03E+05 Ci * 1 kmol / 1.30E+08 Ci * 1000 mol / kmol = 1.56 mol

The amount of the radionuclide in moles was then multiplied by the charge to get the total charge for the constituent.

^{125}Sb
Total charge = 1.56 mol * 3 = 4.69 mol

The same calculation was performed for all the radionuclides tracked in the Steady State Flowsheet Model. This calculation can be found in Table B-8. After all the charges were calculated, they were added together to get the total charge.

The total charges for radionuclides and chemical analytes were then added together to obtain the overall charge of the feed:

29,810,608 (chemical analytes charge) + 2,108,359 (radionuclides charge) = 31,918,968 mol charges

Being highly positive, the amount of OH is then adjusted to counteract the positive charge. The added amount of OH is 31,918,968 moles.

The final chemical analytes feed vector, in moles, is then converted to mol/mol Na by diving all the constituents by the total moles of sodium (5.25E+06 moles). The chemical analyte feed vector for HLW for emissions purposes is found in Table B-9.

The final radionuclide feed vector, in curies, is then converted to Bq per mol of Na by multiplying the Ci amount by 3.7E+10 and then dividing by the sodium moles (5.25E+06 moles). For example,

^{106}Ru
Feed quantity = 621 Ci
Mol Na = 5.25E+06 moles
Conversion to Bq/mol Na = 621 Ci * 3.7E+10 Bq/Ci * 1/ 5.25E+06 mol Na = 4.37E+06 Bq/mol Na

The final radionuclide feed vector is presented in Table B-10.

8 Results and Conclusions

The HLW and LAW feed vectors for the WTP emissions profiles have been developed in this calculation by using the BBI data as the main basis. Calculated feed quantities were compared to the SOW maximums. If the SOW maximum was higher than the calculated number, then the SOW maximum was used. If the actual calculated number was higher than SOW maximum, then the SOW maximum was used. Otherwise the calculated number was selected as the constituent's feed quantity. The tables below show the final feed vector for LAW and HLW respectively. This feed vector will be incorporated in the Steady State Flowsheet Model to support future emissions profiles.

LAW Chemical Analytes Emissions Feed Vector

Analyte	mol/mol Na	Analyte	mol/mol Na
Ag	1.21E-04	NO2	1.96E-01
Al	2.50E-01	NO3	4.12E-01
As	6.11E-04	OH	1.55E+00
B	6.46E-03	Oxalate	2.58E-01
Ba	1.00E-04	Pb	6.80E-04
Be	1.21E-04	Pd	8.04E-06
Bi	2.02E-04	PO4	6.70E-02
Ca	4.00E-02	Pr	3.49E-07
Cd	4.00E-03	Rb	1.35E-05
Ce	3.02E-04	Rh	5.54E-05
Cl	4.59E-02	Ru	6.13E-05
CN	2.89E-04	Sb	1.07E-04
Co	1.67E-04	Se	2.04E-04
Cr	2.00E-02	Si	1.68E-02
Cu	2.21E-04	SO4	3.61E-02
F	1.03E-01	Sr	4.82E-05
Fe	1.00E-02	Ta	2.95E-05
Hg	1.40E-05	Te	3.85E-07
K	1.80E-01	Th	2.15E-05
La	8.30E-05	Ti	9.66E-05
Li	3.95E-03	TIC as CO3	1.55E-01
Mg	1.78E-03	Tl	2.13E-04
Mn	4.87E-03	U(total)	6.18E-04
Mo	2.67E-04	V	2.14E-04
Na	1.00E+00	W	2.01E-04

CALCULATION SHEET

PROJECT: RPP-WTP
JOB NO.: 24590
CALC NO.: 24590-WTP-M4C-FRP-00001
SHEET REV: 0A
SHEET NO.: 17

BY: E. Berrios
DATE: 12/04/02

SUBJECT: Updated Emissions Run Feed Vector

Analyte	mol/mol Na	Analyte	mol/mol Na
Nd	1.69E-04	Y	2.02E-05
NH3	1.02E-02	Zn	4.05E-04
Ni	3.00E-03	Zr	3.59E-04

LAW Radionuclide Emissions Feed Vector

Analyte	Bq/mol Na	Analyte	Bq/mol Na
106Ru	7.78E-01	236U	6.93E+02
113mCd	8.26E+05	237Np	7.78E+02
125Sb	1.99E+07	238Pu	2.06E+03
126Sn	1.49E+05	238U	4.45E+03
129I	2.88E+03	239Pu	2.44E+04
134Cs	3.70E+07	240Pu	4.31E+03
137Cs	2.00E+10	241Am	3.46E+05
137mBa	1.36E+10	241Pu	1.01E+05
14C	2.64E+05	242Cm	4.49E+02
151Sm	2.47E+08	242Pu	2.79E-01
152Eu	1.30E+06	243Am	7.29E+00
154Eu	4.30E+06	243Cm	7.25E+01
155Eu	7.42E+06	244Cm	5.04E+02
226Ra	1.19E+00	3H	3.53E+06
227Ac	1.32E+01	59Ni	1.29E+04
228Ra	2.31E+03	60Co	3.70E+05
229Th	5.43E+01	63Ni	2.37E+06
231Pa	3.85E+01	79Se	1.13E+04
232Th	5.54E+02	90Sr	8.00E+08
232U	1.30E+03	90Y	7.70E+08
233U	1.03E+04	93mNb	1.52E+05
234U	5.99E+03	93Zr	1.92E+05
235U	2.31E+02	99Tc	7.10E+06

HLW Chemical Analytes Emissions Feed Vector

Analyte	mol	mol/mol Na	Analyte	mol	mol/mol Na
Ag	3.24E+04	6.17E-03	NO2	7.96E+05	1.51E-01
Al	3.30E+06	6.28E-01	NO3	3.69E+06	7.03E-01
As	1.36E+04	2.59E-03	OH	4.54E+07	8.64E+00
B	7.65E+05	1.46E-01	Oxalate	7.95E+05	1.51E-01
Ba	2.08E+05	3.97E-02	Pb	3.38E+04	6.43E-03
Be	4.59E+04	8.74E-03	Pd	7.77E+03	1.48E-03
Bi	8.52E+04	1.62E-02	PO4	6.19E+05	1.18E-01
Ca	1.13E+06	2.14E-01	Pr	1.58E+04	3.01E-03
Cd	2.55E+05	4.85E-02	Rb	1.41E+04	2.69E-03
Ce	3.68E+04	7.00E-03	Rh	8.03E+03	1.53E-03
Cl	5.91E+04	1.13E-02	Ru	2.20E+04	4.19E-03
CN	3.91E+05	7.45E-02	Sb	4.38E+04	8.35E-03
Co	4.86E+04	9.25E-03	Se	4.18E+04	7.97E-03
Cr	8.31E+04	1.58E-02	Si	4.30E+06	8.19E-01

CALCULATION SHEET

PROJECT: RPP-WTP
JOB NO.: 24590
CALC NO.: 24590-WTP-M4C-FRP-00001
SHEET REV: 0A
SHEET NO.: 18

BY: E. Berrios
DATE: 12/04/02

SUBJECT: Updated Emissions Run Feed Vector

Analyte	mol	mol/mol Na	Analyte	mol	mol/mol Na
Cu	4.81E+04	9.15E-03	SO4	8.77E+04	1.67E-02
F	1.17E+06	2.23E-01	Sr	3.77E+04	7.19E-03
Fe	3.30E+06	6.29E-01	Ta	1.05E+03	2.01E-04
Hg	3.17E+03	6.03E-04	Te	6.48E+03	1.23E-03
K	2.11E+05	4.02E-02	Th	1.37E+05	2.61E-02
La	1.19E+05	2.27E-02	Ti	1.73E+05	3.29E-02
Li	1.29E+05	2.46E-02	TIC as CO3	3.18E+06	6.05E-01
Mg	5.49E+05	1.05E-01	Tl	1.40E+04	2.67E-03
Mn	7.53E+05	1.43E-01	U(total)	3.74E+05	7.12E-02
Mo	4.31E+04	8.20E-03	V	4.00E+03	7.61E-04
Na	5.25E+06	1.00E+00	W	8.30E+03	1.58E-03
Nd	7.50E+04	1.43E-02	Y	1.14E+04	2.18E-03
NH3	5.98E+05	1.14E-01	Zn	4.08E+04	7.77E-03
Ni	2.60E+05	4.95E-02	Zr	1.05E+06	1.99E-01

HLW Radionuclide Emissions Feed Vector

Analyte	Ci	Bq/mol Na	Analyte	Ci	Bq/mol Na
106Ru	6.21E+02	4.37E+06	236U	6.48E-01	4.57E+03
113mCd	1.93E+03	1.36E+07	237Np	4.70E+02	3.31E+06
125Sb	2.03E+05	1.43E+09	238Pu	2.23E+03	1.57E+07
126Sn	9.54E+02	6.72E+06	238U	1.17E+01	8.24E+04
129I	1.84E+00	1.30E+04	239Pu	1.97E+04	1.39E+08
134Cs	4.47E+02	3.15E+06	240Pu	1.08E+03	7.61E+06
137Cs	9.54E+06	6.72E+10	241Am	5.72E+05	4.03E+09
137mBa	4.66E+05	3.28E+09	241Pu	1.40E+05	9.85E+08
14C	4.13E+01	2.91E+05	242Cm	2.30E+01	1.62E+05
151Sm	6.36E+05	4.48E+09	242Pu	2.05E-01	1.44E+03
152Eu	3.05E+03	2.15E+07	243Am	5.61E+00	3.95E+04
154Eu	3.31E+05	2.33E+09	243Cm	1.91E+04	1.34E+08
155Eu	1.84E+05	1.30E+09	244Cm	1.91E+04	1.34E+08
226Ra	2.16E-02	1.52E+02	3H	4.13E+02	2.91E+06
227Ac	1.09E+02	7.68E+05	59Ni	3.22E+02	2.27E+06
228Ra	2.25E+01	1.59E+05	60Co	6.36E+04	4.48E+08
229Th	9.41E-01	6.63E+03	63Ni	3.01E+04	2.12E+08
231Pa	2.40E+02	1.69E+06	79Se	1.79E+01	1.26E+05
232Th	4.99E+00	3.52E+04	90Sr	6.36E+07	4.48E+11
232U	1.93E+01	1.36E+05	90Y	5.27E+06	3.71E+10
233U	5.72E+00	4.03E+04	93mNb	6.98E+02	4.92E+06
234U	2.08E+01	1.47E+05	93Zr	7.75E+02	5.46E+06
235U	1.59E+00	1.12E+04	99Tc	9.54E+04	6.72E+08

9 References

Allen, G and others, *River Protection Project System Plan,* ORP-11242, Revision 0, August 2002

Berríos, E, 2002, *Integrated Emissions Baseline Report Update*, 24590-WTP-RPT-PT-02-002, Rev 0, March 2002, BNI, Richland, Washington

Capps, V 2002, *Tank by Tank Feed Composition for Steady State Mass Balance*, 24590-PTF-M4C-FRP-00003, Revision B, September 2002, BNI, Richland, Washington, Appendix AA, page AA-1

CHG, 2002, Tank Waste Information Network System-Best Basis Inventory, http:twins.pnl.8001/twins.htm, CH2Mhill H, 2002, Hanford Group Inc., Richland, Washington

Cook, J. et al, 2001 Integrated Emissions Baseline Report for the River Protection Project Waste Treatment Plant, RPT-W375-ES00001, Rev 1, Bechtel National, May 2001, Richland, Washington

CCN# 034316, Integrated Baseline Emissions Report Update, June 2002

CCN# 044663, Updated Basis for the WTP's Emissions Profile, October 2002

CRC 1991. *Handbook of Chemistry and Physics*, 71th Edition, CRC Press, Boca Raton, Florida, Page 1-10

DOE-ORP 2000, *DOE Statement of Work*, DE-AC27-*01RV14136*, US Department of Energy, Office of River Protection, Richland, Washington, Tables TS-7.1, TS-7.2, TS-8.1, TS-8.2, TS-8.3, and TS-8.4

10 Attachments

There are no attachments for this calculation

Appendix A LAW Calculations

CALCULATION SHEET

PROJECT: RPP-WTP
JOB NO.: 24590
CALC NO.: 24590-WTP-M4C-FRP-00001
SHEET REV: 0A
SHEET NO.: 21

BY: E. Berríos
DATE: 12/04/02

SUBJECT: Updated Emissions Run Feed Vector

Table A-1 LAW Chemical Analytes Feed Quantities in Kg

Analyte	Unit	Tank										
		AN-102	AN-103	AN-104	AN-105	AN-107	AP-101	AP-104	AW-101	AZ-101	AZ-102	SY-101
Ag	kg	2.09E+01	8.30E+01	7.86E+01	9.75E+01	6.13E+00	2.66E+00	1.05E+01	6.23E+01	2.43E+01	1.25E+01	7.85E+01
Al	kg	4.80E+04	2.18E+05	1.38E+05	1.60E+05	9.07E+02	2.93E+04	6.11E+04	1.25E+05	2.58E+04	1.26E+03	3.52E+04
As	kg	0.00E+00	3.16E+02	2.51E+02	2.27E+02	1.55E+02	5.31E+00	7.26E+00	3.42E+02	2.52E+01	1.29E+01	1.58E+02
B	kg	0.00E+00	5.22E+02	5.17E+02	4.40E+02	9.13E+01	6.75E+01	1.73E+02	4.90E+02	6.10E+01	1.36E+01	1.44E+02
Ba	kg	1.05E+02	1.58E+02	1.18E+02	1.14E+02	1.93E+01	1.39E+00	2.52E-01	1.38E+01	2.53E-01	1.57E-01	7.90E+01
Be	kg	1.06E+01	1.58E+01	1.45E+01	1.14E+01	3.06E+00	5.57E+00	5.10E-01	7.47E+00	9.57E-01	7.43E-02	7.90E+00
Bi	kg	1.69E+02	3.16E+02	2.34E+02	2.27E+02	2.76E+01	1.05E+01	1.05E+02	4.78E+01	0.00E+00	1.56E+00	5.78E+01
Ca	kg	1.60E+03	5.27E+02	7.17E+02	1.96E+03	2.04E+03	3.25E+01	2.36E+02	7.87E+02	1.21E+02	3.41E+01	2.68E+02
Cd	kg	2.08E+02	3.53E+01	3.35E+01	3.95E+01	2.29E+02	8.43E+00	5.24E+00	2.25E+01	6.75E+00	1.70E+00	7.90E+00
Ce	kg	0.00E+00	3.16E+02	2.34E+02	2.27E+02	1.87E+02	3.15E-01	2.46E-01	6.24E+01	1.92E-01	7.61E-02	1.58E+02
Cl	kg	1.17E+04	2.82E+04	2.86E+04	3.72E+04	7.85E+03	8.35E+03	2.44E+04	2.80E+04	4.56E+02	2.36E+02	1.87E+04
CN	kg	0.00E+00	2.84E+01	0.00E+00	0.00E+00	1.60E+01	2.40E+01	1.09E+02	0.00E+00	0.00E+00	2.44E+01	0.00E+00
Co	kg	0.00E+00	1.43E+02	4.69E+01	4.55E+01	1.38E+01	1.48E+00	2.89E+00	2.34E+01	1.92E-01	7.43E-02	3.15E+01
Cr	kg	8.64E+02	2.52E+03	4.99E+03	7.34E+03	5.90E+02	6.03E+02	1.98E+03	1.22E+03	2.18E+03	2.27E+03	3.57E+02
Cu	kg	8.31E+01	3.18E+01	3.37E+01	3.26E+01	1.05E+02	6.75E+00	1.06E+01	3.19E+01	1.21E+01	3.41E+00	2.56E+01
F	kg	2.18E+03	3.53E+03	2.39E+03	6.14E+03	2.48E+04	1.22E+04	5.13E+02	1.01E+04	5.28E+03	3.51E+03	1.62E+02
Fe	kg	1.43E+02	2.15E+02	3.80E+02	4.03E+02	5.81E+03	1.05E+01	5.24E+01	8.25E+02	6.76E+01	1.70E+01	7.90E+01
Hg	kg	0.00E+00	4.66E+00	0.00E+00	0.00E+00	0.00E+00	0.00E+00	0.00E+00	0.00E+00	4.59E-02	2.03E-01	6.30E-03
K	kg	7.77E+03	4.81E+04	2.40E+04	2.52E+04	6.53E+03	1.32E+05	8.39E+03	1.68E+05	1.44E+04	9.86E+03	7.04E+03
La	kg	5.93E+00	8.72E+01	1.18E+02	6.22E+01	1.22E+02	5.48E+00	4.17E-01	1.62E+01	0.00E+00	1.17E-02	5.27E+00
Li	kg	2.09E+01	2.04E+02	6.95E+01	6.45E+01	9.19E+00	1.43E+00	8.39E-02	1.47E+01	1.68E+00	4.93E-01	1.58E+01
Mg	kg	1.14E+02	3.24E+02	2.34E+02	2.27E+02	2.76E+01	1.05E+01	1.05E+02	1.79E+02	1.21E+02	3.41E+01	1.58E+02
Mn	kg	7.06E+01	3.24E+01	5.98E+01	7.24E+01	2.00E+03	0.00E+00	1.05E+01	6.36E+02	0.00E+00	3.41E+00	1.58E+01
Mo	kg	1.73E+02	3.31E+02	3.07E+02	3.72E+02	1.27E+02	6.11E+01	2.36E+02	2.64E+02	2.91E+02	1.67E+02	2.12E+02
Na	kg	7.94E+05	1.06E+06	1.07E+06	1.10E+06	7.28E+05	5.45E+05	5.52E+05	1.09E+06	3.35E+05	1.72E+05	4.28E+05
Nd	kg	2.09E+02	3.16E+02	2.34E+02	2.27E+02	3.53E+02	1.05E+01	1.05E+02	4.78E+01	1.21E+02	3.41E+01	1.58E+02
NH3	kg	0.00E+00	0.00E+00	4.69E+02	0.00E+00	1.56E+02	7.21E+00	0.00E+00	2.77E+01	0.00E+00	0.00E+00	2.52E+03
Ni	kg	1.38E+03	6.32E+01	1.92E+02	1.42E+02	1.93E+03	3.33E+01	1.69E+02	1.09E+02	0.00E+00	6.82E+00	2.46E+02
NO2	kg	2.91E+05	4.93E+05	4.09E+05	4.58E+05	1.99E+05	1.77E+05	3.03E+05	4.62E+05	2.19E+05	1.09E+05	2.31E+05
NO3	kg	7.28E+05	7.23E+05	6.86E+05	6.91E+05	6.87E+05	5.57E+05	4.77E+05	8.17E+05	2.15E+05	5.70E+04	3.70E+05
OH	kg	3.74E+04	2.61E+05	2.50E+05	2.05E+05	3.87E+04	1.74E+05	8.64E+04	3.82E+05	3.47E+04	6.45E+02	6.91E+04

CALCULATION SHEET

PROJECT: RPP-WTP
JOB NO.: 24590
CALC NO.: 24590-WTP-M4C-FRP-00001
SHEET REV: 0A
SHEET NO.: 22

BY: E. Berríos
DATE: 12/04/02

SUBJECT: Updated Emissions Run Feed Vector

Analyte	Unit	Tank										
		AN-102	AN-103	AN-104	AN-105	AN-107	AP-101	AP-104	AW-101	AZ-101	AZ-102	SY-101
Oxalate	kg	0.00E+00	1.53E+04	2.50E+04	2.19E+04	1.24E+05	7.59E+03	0.00E+00	2.59E+04	3.92E+03	1.20E+04	4.37E+00
Pb	kg	5.45E+02	4.60E+02	2.40E+02	2.63E+02	1.34E+03	6.32E+01	1.05E+02	7.37E+02	0.00E+00	3.41E+01	1.58E+02
Pd	kg	0.00E+00	0.00E+00	0.00E+00	0.00E+00	0.00E+00	0.00E+00	0.00E+00	0.00E+00	6.34E+00	0.00E+00	0.00E+00
PO4	kg	1.79E+04	8.91E+03	1.73E+04	2.53E+04	5.34E+03	4.06E+03	1.92E+04	1.11E+04	4.03E+03	1.53E+03	1.19E+04
Pr	kg	0.00E+00	0.00E+00	0.00E+00	0.00E+00	0.00E+00	7.29E-02	7.13E-01	0.00E+00	1.92E-01	7.43E-02	0.00E+00
Rb	kg	0.00E+00	0.00E+00	0.00E+00	0.00E+00	0.00E+00	1.67E+01	1.18E+01	0.00E+00	1.52E+01	1.13E+01	0.00E+00
Rh	kg	0.00E+00	0.00E+00	0.00E+00	0.00E+00	8.27E+01	0.00E+00	2.28E+01	0.00E+00	6.82E+00	1.78E+01	0.00E+00
Ru	kg	0.00E+00	0.00E+00	9.00E+01	0.00E+00	0.00E+00	0.00E+00	0.00E+00	0.00E+00	1.52E+00	9.49E+00	0.00E+00
Sb	kg	0.00E+00	1.89E+02	1.41E+02	1.37E+02	1.02E+00	1.77E-01	1.12E-01	1.65E+02	1.92E-01	1.13E-01	9.48E+01
Se	kg	0.00E+00	2.18E+02	2.34E+02	2.27E+02	6.89E+01	9.70E+00	2.85E+01	1.20E+02	7.46E+01	2.22E+01	1.58E+02
Si	kg	7.24E+01	2.02E+03	3.54E+03	1.77E+03	0.00E+00	5.78E+02	1.94E+02	1.77E+03	1.77E+03	1.77E+03	2.16E+02
SO4	kg	5.46E+04	1.10E+04	4.10E+04	2.85E+04	3.09E+04	1.70E+04	1.40E+04	1.27E+04	4.54E+04	5.73E+04	1.17E+04
Sr	kg	7.25E+00	3.16E+01	2.34E+01	1.18E+01	9.19E+00	1.60E+00	1.05E+01	1.07E+01	1.21E+01	3.41E+00	1.58E+01
Ta	kg	0.00E+00	4.83E+01	0.00E+00	7.25E+01	7.75E+01	3.75E-01	1.44E-01	0.00E+00	1.92E-01	7.43E-02	0.00E+00
Te	kg	0.00E+00	0.00E+00	0.00E+00	0.00E+00	0.00E+00	0.00E+00	7.13E-01	0.00E+00	1.92E-01	8.23E-02	0.00E+00
Th	kg	0.00E+00	4.83E+01	0.00E+00	7.25E+01	0.00E+00	4.64E-02	1.06E+00	0.00E+00	1.82E-01	6.20E-02	0.00E+00
Ti	kg	2.09E+01	3.16E+01	2.34E+01	2.27E+01	1.55E+01	2.66E+00	1.05E+01	3.46E+01	1.21E+01	3.41E+00	1.58E+01
TIC as CO3	kg	2.65E+05	9.15E+04	1.97E+05	2.31E+05	2.08E+05	1.36E+05	7.10E+04	1.19E+05	1.03E+05	1.08E+05	9.02E+04
Tl	kg	0.00E+00	6.32E+02	4.69E+02	4.55E+02	3.98E-01	7.59E-02	2.10E-01	2.42E+02	1.92E-01	7.43E-02	3.15E+02
U(total)	kg	7.36E+01	1.40E+02	5.01E+02	2.71E+02	3.43E+02	2.33E+02	4.36E+01	2.70E+03	3.71E+00	3.91E+01	8.14E+00
V	kg	1.05E+02	1.58E+02	1.18E+02	1.14E+02	0.00E+00	3.15E+00	5.24E+01	2.34E+01	9.60E+00	3.70E+00	7.90E+01
W	kg	0.00E+00	5.37E+02	0.00E+00	0.00E+00	5.19E+02	1.21E+02	3.75E+02	0.00E+00	0.00E+00	1.87E+01	0.00E+00
Y	kg	0.00E+00	9.65E+00	0.00E+00	1.45E+01	2.60E+01	0.00E+00	1.05E+01	0.00E+00	0.00E+00	7.43E-02	0.00E+00
Zn	kg	2.09E+01	1.10E+02	8.82E+01	1.98E+02	6.99E+01	2.36E+01	1.05E+01	1.33E+02	1.21E+01	3.41E+00	1.64E+01
Zr	kg	3.28E+01	3.49E+01	6.31E+01	4.43E+01	2.45E+02	5.90E+00	1.05E+01	2.08E+02	1.35E+01	3.41E+00	1.58E+01

CALCULATION SHEET

PROJECT: RPP-WTP
JOB NO.: 24590
CALC NO.: 24590-WTP-M4C-FRP-00001
SHEET REV: 0A
SHEET NO.: 23

BY: E. Berrios
DATE: 12/04/02

SUBJECT: Updated Emissions Run Feed Vector

Table A-2 LAW Chemical Analytes Feed Quantities in moles

Analyte	MW g/mol	Unit	Tank											
			AN-102	AN-103	AN-104	AN-105	AN-107	AP-101	AP-104	AW-101	AZ-101	AZ-102	SY-101	Max Feed*
Ag	107.8	mol	1.94E+02	7.70E+02	7.29E+02	9.04E+02	5.69E+01	2.47E+01	9.74E+01	5.78E+02	2.25E+02	1.16E+02	7.28E+02	9.04E+02
Al	26.9	mol	1.78E+06	8.10E+06	5.13E+06	5.95E+06	3.37E+04	1.09E+06	2.27E+06	4.65E+06	9.59E+05	4.68E+04	1.31E+06	8.10E+06
As	74.9	mol	0.00E+00	4.22E+03	3.35E+03	3.03E+03	2.07E+03	7.09E+01	9.69E+01	4.57E+03	3.36E+02	1.72E+02	2.11E+03	4.57E+03
B	10.8	mol	0.00E+00	4.83E+04	4.79E+04	4.07E+04	8.45E+03	6.25E+03	1.60E+04	4.54E+04	5.65E+03	1.26E+03	1.33E+04	4.83E+04
Ba	137.3	mol	7.65E+02	1.15E+03	8.59E+02	8.30E+02	1.41E+02	1.01E+01	1.84E+00	1.01E+02	1.84E+00	1.14E+00	5.75E+02	1.15E+03
Be	9.0	mol	1.18E+03	1.76E+03	1.61E+03	1.27E+03	3.40E+02	6.19E+02	5.67E+01	8.30E+02	1.06E+02	8.26E+00	8.78E+02	1.76E+03
Bi	208.9	mol	8.09E+02	1.51E+03	1.12E+03	1.09E+03	1.32E+02	5.02E+01	5.02E+02	2.29E+02	0.00E+00	7.46E+00	2.77E+02	1.51E+03
Ca	40.0	mol	4.00E+04	1.31E+04	1.79E+04	4.89E+04	5.09E+04	8.10E+02	5.89E+03	1.96E+04	3.02E+03	8.50E+02	6.68E+03	5.09E+04
Cd	112.4	mol	1.85E+03	3.14E+02	2.98E+02	3.51E+02	2.04E+03	7.50E+01	4.66E+01	2.00E+02	6.01E+01	1.51E+01	7.03E+01	2.04E+03
Ce	140.1	mol	0.00E+00	2.26E+03	1.67E+03	1.62E+03	1.33E+03	2.25E+00	1.76E+00	4.45E+02	1.37E+00	5.43E-01	1.13E+03	2.26E+03
Cl	35.4	mol	3.31E+05	7.94E+05	8.06E+05	1.05E+06	2.21E+05	2.35E+05	6.87E+05	7.89E+05	1.28E+04	6.65E+03	5.27E+05	1.05E+06
CN	26.0	mol	0.00E+00	1.09E+03	0.00E+00	0.00E+00	6.15E+02	9.23E+02	4.19E+03	0.00E+00	0.00E+00	9.38E+02	0.00E+00	4.19E+03
Co	58.9	mol	0.00E+00	2.43E+03	7.96E+02	7.72E+02	2.34E+02	2.51E+01	4.91E+01	3.97E+02	3.26E+00	1.26E+00	5.35E+02	2.43E+03
Cr	51.9	mol	1.66E+04	4.85E+04	9.60E+04	1.41E+05	1.13E+04	1.16E+04	3.81E+04	2.35E+04	4.19E+04	4.37E+04	6.87E+03	1.41E+05
Cu	63.5	mol	1.31E+03	5.01E+02	5.31E+02	5.13E+02	1.65E+03	1.06E+02	1.67E+02	5.02E+02	1.91E+02	5.37E+01	4.03E+02	1.65E+03
F	18.9	mol	1.15E+05	1.86E+05	1.26E+05	3.23E+05	1.31E+06	6.42E+05	2.70E+04	5.32E+05	2.78E+05	1.85E+05	8.53E+03	1.31E+06
Fe	55.8	mol	2.56E+03	3.85E+03	6.81E+03	7.22E+03	1.04E+05	1.88E+02	9.39E+02	1.48E+04	1.21E+03	3.05E+02	1.42E+03	1.04E+05
Hg	200.6	mol	0.00E+00	2.32E+01	0.00E+00	0.00E+00	0.00E+00	0.00E+00	0.00E+00	0.00E+00	2.29E-01	1.01E+00	3.14E-02	2.32E+01
K	39.1	mol	1.99E+05	1.23E+06	6.14E+05	6.45E+05	1.67E+05	3.38E+06	2.15E+05	4.30E+06	3.68E+05	2.52E+05	1.80E+05	4.30E+06
La	138.9	mol	4.27E+01	6.28E+02	8.50E+02	4.48E+02	8.78E+02	3.95E+01	3.00E+00	1.17E+02	0.00E+00	8.42E-02	3.79E+01	8.78E+02
Li	6.9	mol	3.03E+03	2.96E+04	1.01E+04	9.35E+03	1.33E+03	2.07E+02	1.22E+01	2.13E+03	2.43E+02	7.14E+01	2.29E+03	2.96E+04
Mg	24.3	mol	4.69E+03	1.33E+04	9.63E+03	9.34E+03	1.14E+03	4.32E+02	4.32E+03	7.37E+03	4.98E+03	1.40E+03	6.50E+03	1.33E+04
Mn	54.9	mol	1.29E+03	5.90E+02	1.09E+03	1.32E+03	3.64E+04	0.00E+00	1.91E+02	1.16E+04	0.00E+00	6.21E+01	2.88E+02	3.64E+04
Mo	95.9	mol	1.80E+03	3.45E+03	3.20E+03	3.88E+03	1.32E+03	6.37E+02	2.46E+03	2.75E+03	3.03E+03	1.74E+03	2.21E+03	3.88E+03
Na	22.9	mol	3.47E+07	4.61E+07	4.65E+07	4.78E+07	3.17E+07	2.37E+07	2.40E+07	4.74E+07	1.46E+07	7.48E+06	1.86E+07	7.48E+06
Nd	144.2	mol	1.45E+03	2.19E+03	1.62E+03	1.57E+03	2.45E+03	7.28E+01	7.28E+02	3.31E+02	8.39E+02	2.36E+02	1.10E+03	2.45E+03
NH3	17	mol	0.00E+00	0.00E+00	2.76E+04	0.00E+00	9.18E+03	4.24E+02	0.00E+00	1.63E+03	0.00E+00	0.00E+00	1.48E+05	1.48E+05
Ni	58.7	mol	2.35E+04	1.08E+03	3.27E+03	2.42E+03	3.29E+04	5.67E+02	2.88E+03	1.86E+03	0.00E+00	1.16E+02	4.19E+03	3.29E+04
NO2	46.0	mol	6.33E+06	1.07E+07	8.89E+06	9.96E+06	4.33E+06	3.85E+06	6.59E+06	1.00E+07	4.76E+06	2.37E+06	5.02E+06	1.07E+07
NO3	62.0	mol	1.17E+07	1.17E+07	1.11E+07	1.11E+07	1.11E+07	8.98E+06	7.69E+06	1.32E+07	3.47E+06	9.19E+05	5.97E+06	1.32E+07
OH	17.0	mol	2.20E+06	1.54E+07	1.47E+07	1.21E+07	2.28E+06	1.02E+07	5.08E+06	2.25E+07	2.04E+06	3.79E+04	4.06E+06	2.25E+07
Oxalate	88.0	mol	0.00E+00	1.74E+05	2.84E+05	2.49E+05	1.41E+06	8.63E+04	0.00E+00	2.94E+05	4.45E+04	1.36E+05	4.97E+01	1.41E+06

CALCULATION SHEET

PROJECT: RPP-WTP
JOB NO.: 24590
CALC NO.: 24590-WTP-M4C-FRP-00001
SHEET REV: 0A
SHEET NO.: 24

BY: E. Berríos
DATE: 12/04/02

SUBJECT: Updated Emissions Run Feed Vector

Analyte	MW g/mol	Unit	Tank											
			AN-102	AN-103	AN-104	AN-105	AN-107	AP-101	AP-104	AW-101	AZ-101	AZ-102	SY-101	Max Feed*
Pb	207.2	mol	2.63E+03	2.22E+03	1.16E+03	1.27E+03	6.47E+03	3.05E+02	5.07E+02	3.56E+03	0.00E+00	1.65E+02	7.63E+02	6.47E+03
Pd	105.4	mol	0.00E+00	0.00E+00	0.00E+00	0.00E+00	0.00E+00	0.00E+00	0.00E+00	0.00E+00	6.02E+01	0.00E+00	0.00E+00	6.02E+01
PO4	94.9	mol	1.89E+05	9.38E+04	1.82E+05	2.66E+05	5.62E+04	4.27E+04	2.02E+05	1.17E+05	4.24E+04	1.61E+04	1.25E+05	2.66E+05
Pr	140.9	mol	0.00E+00	0.00E+00	0.00E+00	0.00E+00	0.00E+00	5.17E-01	5.06E+00	0.00E+00	1.36E+00	5.27E-01	0.00E+00	5.06E+00
Rb	85.5	mol	0.00E+00	0.00E+00	0.00E+00	0.00E+00	0.00E+00	1.95E+02	1.38E+02	0.00E+00	1.78E+02	1.32E+02	0.00E+00	1.95E+02
Rh	102.9	mol	0.00E+00	0.00E+00	0.00E+00	0.00E+00	8.04E+02	0.00E+00	2.22E+02	0.00E+00	6.63E+01	1.73E+02	0.00E+00	8.04E+02
Ru	101.1	mol	0.00E+00	0.00E+00	8.90E+02	0.00E+00	0.00E+00	0.00E+00	0.00E+00	0.00E+00	1.50E+01	9.39E+01	0.00E+00	8.90E+02
Sb	121.7	mol	0.00E+00	1.55E+03	1.16E+03	1.12E+03	8.37E+00	1.45E+00	9.20E-01	1.35E+03	1.58E+00	9.28E-01	7.78E+02	1.55E+03
Se	78.9	mol	0.00E+00	2.76E+03	2.96E+03	2.87E+03	8.72E+02	1.23E+02	3.61E+02	1.52E+03	9.44E+02	2.81E+02	2.00E+03	2.96E+03
Si	28.1	mol	2.58E+03	7.19E+04	1.26E+05	6.30E+04	0.00E+00	2.06E+04	6.90E+03	6.30E+04	6.30E+04	6.30E+04	7.69E+03	1.26E+05
SO4	96.1	mol	5.68E+05	1.14E+05	4.27E+05	2.97E+05	3.22E+05	1.77E+05	1.46E+05	1.32E+05	4.72E+05	5.96E+05	1.22E+05	5.96E+05
Sr	87.6	mol	8.28E+01	3.61E+02	2.67E+02	1.35E+02	1.05E+02	1.83E+01	1.20E+02	1.22E+02	1.38E+02	3.89E+01	1.80E+02	3.61E+02
Ta	180.9	mol	0.00E+00	2.67E+02	0.00E+00	4.01E+02	4.28E+02	2.07E+00	7.96E-01	0.00E+00	1.06E+00	4.11E-01	0.00E+00	4.28E+02
Te	127.6	mol	0.00E+00	0.00E+00	0.00E+00	0.00E+00	0.00E+00	0.00E+00	5.59E+00	0.00E+00	1.50E+00	6.45E-01	0.00E+00	5.59E+00
Th	232.0	mol	0.00E+00	2.08E+02	0.00E+00	3.13E+02	0.00E+00	2.00E-01	4.57E+00	0.00E+00	7.84E-01	2.67E-01	0.00E+00	3.13E+02
Ti	47.9	mol	4.36E+02	6.60E+02	4.89E+02	4.74E+02	3.24E+02	5.55E+01	2.19E+02	7.22E+02	2.53E+02	7.12E+01	3.30E+02	7.22E+02
TIC as CO3	60.0	mol	4.42E+06	1.53E+06	3.28E+06	3.85E+06	3.47E+06	2.27E+06	1.18E+06	1.98E+06	1.72E+06	1.80E+06	1.50E+06	4.42E+06
Tl	204.4	mol	0.00E+00	3.09E+03	2.29E+03	2.23E+03	1.95E+00	3.71E-01	1.03E+00	1.18E+03	9.39E-01	3.64E-01	1.54E+03	3.09E+03
U(total)	238.0	mol	3.09E+02	5.88E+02	2.11E+03	1.14E+03	1.44E+03	9.79E+02	1.83E+02	1.13E+04	1.56E+01	1.64E+02	3.42E+01	1.13E+04
V	50.9	mol	2.06E+03	3.10E+03	2.32E+03	2.24E+03	0.00E+00	6.19E+01	1.03E+03	4.60E+02	1.89E+02	7.27E+01	1.55E+03	3.10E+03
W	183.9	mol	0.00E+00	2.92E+03	0.00E+00	0.00E+00	2.82E+03	6.58E+02	2.04E+03	0.00E+00	0.00E+00	1.02E+02	0.00E+00	2.92E+03
Y	88.9	mol	0.00E+00	1.09E+02	0.00E+00	1.63E+02	2.92E+02	0.00E+00	1.18E+02	0.00E+00	0.00E+00	8.36E-01	0.00E+00	2.92E+02
Zn	65.4	mol	3.20E+02	1.68E+03	1.35E+03	3.03E+03	1.07E+03	3.61E+02	1.61E+02	2.03E+03	1.85E+02	5.21E+01	2.51E+02	3.03E+03
Zr	91.2	mol	3.60E+02	3.83E+02	6.92E+02	4.86E+02	2.69E+03	6.47E+01	1.15E+02	2.28E+03	1.48E+02	3.74E+01	1.73E+02	2.69E+03

* Except for Na which is the minimum.

CALCULATION SHEET

PROJECT: RPP-WTP
JOB NO.: 24590
CALC NO.: 24590-WTP-M4C-FRP-00001
SHEET REV: 0A
SHEET NO.: 25

BY: E. Berrios
DATE: 12/04/02

SUBJECT: Updated Emissions Run Feed Vector

Table A-3 LAW Radionuclide Feed Quantities in Curies

Analyte	Unit	Tank											
		AN-102	AN-103	AN-104	AN-105	AN-107	AP-101	AP-104	AW-101	AZ-101	AZ-102	SY-101	Max
106Ru	Ci	1.73E-04	2.21E-04	2.00E-04	2.23E-04	8.35E-05	1.16E-04	7.59E-05	2.17E-04	3.05E-04	6.25E-05	6.61E-05	3.05E-04
113mCd	Ci	1.57E+02	2.00E+02	1.82E+02	2.02E+02	7.59E+01	1.05E+02	9.08E+01	1.98E+02	3.24E+02	6.32E+01	7.85E+01	3.24E+02
125Sb	Ci	8.65E+01	1.10E+02	9.98E+01	1.11E+02	4.17E+01	2.12E+02	4.23E+01	1.08E+02	4.02E+03	3.17E+03	3.69E+01	4.02E+03
126Sn	Ci	4.87E+00	1.81E+01	1.30E+01	6.27E+00	3.02E+01	3.57E+00	3.04E+00	6.10E+00	7.89E+00	1.80E+00	2.61E+00	3.02E+01
129I	Ci	4.60E-01	9.24E-01	7.13E-01	9.05E-01	3.71E-01	3.39E-01	5.82E-01	1.13E+00	2.69E-01	1.16E-01	4.36E-01	1.13E+00
134Cs	Ci	2.17E+00	1.31E+00	1.24E+00	1.38E+00	1.05E+00	1.57E+02	9.25E-01	1.35E+02	1.45E+04	2.38E+03	1.13E+00	1.45E+04
137Cs	Ci	1.46E+06	1.90E+06	1.99E+06	1.51E+06	1.07E+06	5.97E+05	8.94E+05	1.72E+06	5.65E+06	3.35E+06	6.79E+05	5.65E+06
137mBa	Ci	1.38E+06	1.80E+06	1.88E+06	1.43E+06	1.01E+06	5.65E+05	8.46E+05	1.63E+06	5.35E+06	3.17E+06	6.42E+05	5.35E+06
14C	Ci	2.49E+00	5.34E+01	4.68E+01	5.25E+01	1.26E+00	1.11E+00	2.66E+00	3.94E+01	6.19E+00	3.17E+00	2.99E+00	5.34E+01
151Sm	Ci	2.68E+04	3.41E+04	3.09E+04	3.45E+04	1.29E+04	1.79E+04	0.00E+00	3.36E+04	4.99E+04	9.94E+03	1.45E+04	4.99E+04
152Eu	Ci	8.09E+00	1.03E+01	9.34E+00	1.04E+01	3.90E+00	8.13E+00	4.17E+00	1.02E+01	2.63E+02	5.02E+01	3.67E+00	2.63E+02
154Eu	Ci	7.97E+02	7.87E+02	3.11E+02	2.53E+02	2.46E+03	7.97E+00	1.80E+02	2.48E+02	1.98E+02	2.01E+02	7.97E+01	2.46E+03
155Eu	Ci	4.08E+02	1.27E+02	2.93E+02	1.55E+02	1.50E+03	4.91E+00	6.24E+01	7.77E+02	2.57E+02	3.83E+02	2.47E+02	1.50E+03
226Ra	Ci	3.23E-04	4.12E-04	3.73E-04	4.17E-04	1.56E-04	2.16E-04	2.39E-04	4.06E-04	4.65E-04	9.52E-05	1.92E-04	4.65E-04
227Ac	Ci	3.30E-03	2.42E-03	2.19E-03	4.25E-03	1.59E-03	1.27E-03	1.16E-03	4.13E-03	5.18E-03	1.04E-03	2.00E-03	5.18E-03
228Ra	Ci	3.45E-01	9.05E-01	8.20E-01	5.02E-01	1.88E-01	4.75E-01	8.57E-02	4.58E-01	9.72E-08	1.32E-03	7.44E-02	9.05E-01
229Th	Ci	1.65E-02	2.10E-02	1.90E-02	2.13E-02	7.96E-03	1.10E-02	3.85E-03	2.07E-02	3.89E-06	6.37E-05	3.33E-03	2.13E-02
231Pa	Ci	8.90E-03	1.13E-02	1.03E-02	1.15E-02	4.29E-03	5.94E-03	6.21E-03	1.11E-02	1.51E-02	2.99E-03	5.30E-03	1.51E-02
232Th	Ci	7.88E-04	7.10E-02	6.25E-02	1.12E-01	4.18E-02	5.79E-02	1.16E-04	5.14E-02	1.57E-07	6.78E-06	1.51E-02	1.12E-01
232U	Ci	3.29E-02	4.10E-02	1.72E-01	1.16E-01	2.53E-01	6.21E-02	1.27E-02	5.08E-01	6.30E-05	8.01E-05	2.59E-03	5.08E-01
233U	Ci	1.35E-01	1.69E-01	7.04E-01	4.76E-01	1.04E+00	2.55E-01	5.23E-02	2.08E+00	2.57E-04	3.10E-04	1.06E-02	2.08E+00
234U	Ci	2.78E-02	5.95E-02	2.37E-01	1.08E-01	1.33E-01	8.64E-02	1.63E-02	1.21E+00	1.79E-03	2.15E-02	2.99E-03	1.21E+00
235U	Ci	1.11E-03	2.31E-03	8.12E-03	4.24E-03	5.15E-03	3.56E-03	6.63E-04	4.67E-02	6.80E-05	7.04E-04	1.21E-04	4.67E-02
236U	Ci	9.90E-04	3.47E-03	1.12E-02	4.90E-03	4.69E-03	3.02E-03	5.33E-04	1.40E-01	1.45E-04	1.65E-03	9.42E-05	1.40E-01
237Np	Ci	5.56E+00	6.11E-01	5.67E-01	6.13E-01	1.84E-01	2.29E-02	7.47E-01	5.23E-01	1.29E-01	3.58E-01	9.45E-02	5.56E+00
238Pu	Ci	5.43E-01	2.75E-01	3.79E-01	2.16E-01	5.27E+00	6.16E-02	2.38E-02	1.47E+01	1.71E-01	2.63E+00	4.36E-03	1.47E+01
238U	Ci	2.46E-02	4.66E-02	1.68E-01	9.03E-02	1.14E-01	7.80E-02	1.47E-02	9.00E-01	1.24E-03	1.31E-02	2.72E-03	9.00E-01
239Pu	Ci	1.77E+01	5.43E+00	8.62E+00	5.80E+00	1.74E+02	4.55E-01	7.31E-01	9.92E+01	1.48E+00	2.38E+01	1.56E-01	1.74E+02
240Pu	Ci	3.12E+00	1.13E+00	1.70E+00	1.09E+00	3.08E+01	7.67E-02	1.24E-01	2.73E+01	4.47E-01	7.04E+00	2.66E-02	3.08E+01
241Am	Ci	5.68E+02	1.99E+01	5.29E+01	2.08E+01	2.47E+03	7.11E-01	1.18E+01	1.05E+02	2.13E+00	1.24E+00	8.92E-01	2.47E+03
241Pu	Ci	2.94E+01	1.75E+01	2.38E+01	1.26E+01	2.85E+02	7.90E-01	1.04E+00	7.23E+02	1.32E+01	2.01E+02	2.23E-01	7.23E+02
242Cm	Ci	1.52E+00	3.83E-02	1.20E-01	4.62E-02	6.23E+00	1.63E-06	3.70E-02	1.56E-01	1.90E-03	1.06E-01	2.34E-03	6.23E+00

CALCULATION SHEET

PROJECT: RPP-WTP
JOB NO.: 24590
CALC NO.: 24590-WTP-M4C-FRP-00001
SHEET REV: 0A
SHEET NO.: 26

BY: E. Berríos
DATE: 12/04/02

SUBJECT: Updated Emissions Run Feed Vector

Analyte	Unit	Tank											
		AN-102	AN-103	AN-104	AN-105	AN-107	AP-101	AP-104	AW-101	AZ-101	AZ-102	SY-101	Max
242Pu	Ci	2.20E-04	1.15E-04	1.55E-04	8.78E-05	2.14E-03	6.96E-06	8.05E-06	3.87E-03	6.90E-05	1.06E-03	1.72E-06	3.87E-03
243Am	Ci	2.23E-02	1.33E-03	2.91E-03	9.10E-04	1.01E-01	3.55E-05	4.20E-04	7.21E-03	4.48E-04	1.62E-04	3.17E-05	1.01E-01
243Cm	Ci	1.27E-01	3.40E-03	1.02E-02	4.00E-03	5.18E-01	1.47E-04	1.49E-02	7.68E-02	2.78E-04	1.55E-02	1.89E-04	5.18E-01
244Cm	Ci	9.94E-01	4.21E-02	9.40E-02	3.40E-02	3.60E+00	3.19E-03	3.27E-01	1.79E+00	6.24E-03	2.05E-03	1.66E-03	3.60E+00
3H	Ci	2.26E+00	9.01E+00	2.47E+01	4.98E+00	2.43E+00	1.96E+01	2.78E+00	2.74E+01	5.48E+01	1.16E+02	7.14E+02	7.14E+02
59Ni	Ci	1.74E+00	5.05E+00	4.49E+00	5.03E+00	8.41E-01	1.16E+00	1.86E+00	4.26E+00	0.00E+00	3.66E-02	5.33E-01	5.05E+00
60Co	Ci	2.73E+02	4.12E+01	6.33E+01	5.52E+01	4.04E+02	1.26E+01	2.77E+01	6.71E+01	5.92E+01	5.85E+01	3.23E+01	4.04E+02
63Ni	Ci	1.64E+02	4.79E+02	4.26E+02	4.77E+02	7.93E+01	1.10E+02	1.79E+02	4.03E+02	0.00E+00	3.44E+00	4.98E+01	4.79E+02
79Se	Ci	2.14E+00	2.06E+00	2.54E+00	1.04E+00	2.58E+00	2.45E-01	3.16E+00	2.42E+00	4.44E+00	1.43E+00	6.83E-01	4.44E+00
90Sr	Ci	2.97E+05	7.40E+03	8.55E+04	3.10E+04	3.02E+05	3.62E+02	7.76E+03	8.93E+04	3.03E+03	7.00E+03	9.66E+03	3.02E+05
90Y	Ci	2.97E+05	7.40E+03	8.55E+04	3.10E+04	3.02E+05	3.62E+02	7.76E+03	8.93E+04	3.03E+03	7.00E+03	9.66E+03	3.02E+05
93mNb	Ci	3.19E+01	3.63E+01	3.29E+01	4.11E+01	1.54E+01	1.91E+01	1.55E+01	4.00E+01	5.95E+01	1.18E+01	4.16E+00	5.95E+01
93Zr	Ci	3.98E+01	5.06E+01	4.58E+01	5.12E+01	1.92E+01	2.66E+01	1.88E+01	4.98E+01	7.53E+01	1.49E+01	5.02E+00	7.53E+01
99Tc	Ci	4.95E+02	6.93E+02	7.87E+02	1.12E+03	2.60E+02	1.99E+02	7.09E+02	8.37E+02	1.17E+03	6.99E+02	6.43E+02	1.17E+03

CALCULATION SHEET

PROJECT: RPP-WTP
JOB NO.: 24590
CALC NO.: 24590-WTP-M4C-FRP-00001
SHEET REV: 0A
SHEET NO.: 27

BY: E. Berrios
DATE: 12/04/02

SUBJECT: Updated Emissions Run Feed Vector

Table A-4 LAW Chemical Analytes Comparison with SOW Maximums

Analyte	Feed mol	Feed mol/mol Na	Cont Max mol/mol Na	Selected mol/mol Na	Basis	Feed mol
Ag	9.04E+02	1.21E-04	N/A*	1.21E-04	Actual	9.04E+02
Al	8.10E+06	1.08E+00	2.50E-01	2.50E-01	SOWM	1.87E+06
As	4.57E+03	6.11E-04	N/A	6.11E-04	Actual	4.57E+03
B	4.83E+04	6.46E-03	N/A	6.46E-03	Actual	4.83E+04
Ba	1.15E+03	1.54E-04	1.00E-04	1.00E-04	SOWM	7.48E+02
Be	1.76E+03	2.35E-04	N/A	2.35E-04	Actual	1.76E+03
Bi	1.51E+03	2.02E-04	N/A	2.02E-04	Actual	1.51E+03
Ca	5.09E+04	6.80E-03	4.00E-02	4.00E-02	SOWM	2.99E+05
Cd	2.04E+03	2.72E-04	4.00E-03	4.00E-03	SOWM	2.99E+04
Ce	2.26E+03	3.02E-04	N/A	3.02E-04	Actual	2.26E+03
Cl	1.05E+06	1.40E-01	8.90E-02	8.90E-02	SOWM	6.66E+05
CN	4.19E+03	5.61E-04	N/A	5.61E-04	Actual	4.19E+03
Co	2.43E+03	3.25E-04	N/A	3.25E-04	Actual	2.43E+03
Cr	1.41E+05	1.89E-02	2.00E-02	2.00E-02	SOWM	1.50E+05
Cu	1.65E+03	2.21E-04	N/A	2.21E-04	Actual	1.65E+03
F	1.31E+06	1.75E-01	2.00E-01	2.00E-01	SOWM	1.50E+06
Fe	1.04E+05	1.39E-02	1.00E-02	1.00E-02	SOWM	7.48E+04
Hg	2.32E+01	3.11E-06	1.40E-05	1.40E-05	SOWM	1.05E+02
K	4.30E+06	5.75E-01	1.80E-01	1.80E-01	SOWM	1.35E+06
La	8.78E+02	1.17E-04	8.30E-05	8.30E-05	SOWM	6.21E+02
Li	2.96E+04	3.95E-03	N/A	3.95E-03	Actual	2.96E+04
Mg	1.33E+04	1.78E-03	N/A	1.78E-03	Actual	1.33E+04
Mn	3.64E+04	4.87E-03	N/A	4.87E-03	Actual	3.64E+04
Mo	3.88E+03	5.19E-04	N/A	5.19E-04	Actual	3.88E+03
Na	7.48E+06	1.00E+00	N/A	1.00E+00	Actual	7.48E+06
Nd	2.45E+03	3.27E-04	N/A	3.27E-04	Actual	2.45E+03
NH3	1.48E+05	1.98E-02	N/A	1.98E-02	Actual	1.48E+05
Ni	3.29E+04	4.40E-03	3.00E-03	3.00E-03	SOWM	2.24E+04
NO2	1.07E+07	1.43E+00	3.80E-01	3.80E-01	SOWM	2.84E+06
NO3	1.32E+07	1.76E+00	8.00E-01	8.00E-01	SOWM	5.98E+06
OH	2.25E+07	3.00E+00	N/A	3.00E+00	Actual	2.25E+07
Oxalate	1.41E+06	1.88E-01	5.00E-01	5.00E-01	SOWM	3.74E+06
Pb	6.47E+03	8.65E-04	6.80E-04	6.80E-04	SOWM	5.09E+03
Pd	6.02E+01	8.04E-06	N/A	8.04E-06	Actual	6.02E+01
PO4	2.66E+05	3.56E-02	1.30E-01	1.30E-01	SOWM	9.72E+05
Pr	5.06E+00	6.77E-07	N/A	6.77E-07	Actual	5.06E+00
Rb	1.95E+02	2.61E-05	N/A	2.61E-05	Actual	1.95E+02
Rh	8.04E+02	1.07E-04	N/A	1.07E-04	Actual	8.04E+02
Ru	8.90E+02	1.19E-04	N/A	1.19E-04	Actual	8.90E+02
Sb	1.55E+03	2.07E-04	N/A	2.07E-04	Actual	1.55E+03
Se	2.96E+03	3.96E-04	N/A	3.96E-04	Actual	2.96E+03
Si	1.26E+05	1.68E-02	N/A	1.68E-02	Actual	1.26E+05
SO4	5.96E+05	7.97E-02	7.00E-02	7.00E-02	SOWM	5.23E+05
Sr	3.61E+02	4.82E-05	N/A	4.82E-05	Actual	3.61E+02
Ta	4.28E+02	5.73E-05	N/A	5.73E-05	Actual	4.28E+02
Te	5.59E+00	7.47E-07	N/A	7.47E-07	Actual	5.59E+00
Th	3.13E+02	4.18E-05	N/A	4.18E-05	Actual	3.13E+02

CALCULATION SHEET

PROJECT: RPP-WTP
JOB NO.: 24590
CALC NO.: 24590-WTP-M4C-FRP-00001
SHEET REV: 0A
SHEET NO.: 28

BY: E. Berríos
DATE: 12/04/02

SUBJECT: Updated Emissions Run Feed Vector

Analyte	Feed mol	Feed mol/mol Na	Cont Max mol/mol Na	Selected mol/mol Na	Basis	Feed mol
Ti	7.22E+02	9.66E-05	N/A	9.66E-05	Actual	7.22E+02
TIC as CO3	4.42E+06	5.91E-01	3.00E-01	3.00E-01	SOWM	2.24E+06
Tl	3.09E+03	4.13E-04	N/A	4.13E-04	Actual	3.09E+03
U(total)	1.13E+04	1.52E-03	1.20E-03	1.20E-03	SOWM	8.97E+03
V	3.10E+03	4.15E-04	N/A	4.15E-04	Actual	3.10E+03
W	2.92E+03	3.90E-04	N/A	3.90E-04	Actual	2.92E+03
Y	2.92E+02	3.91E-05	N/A	3.91E-05	Actual	2.92E+02
Zn	3.03E+03	4.05E-04	N/A	4.05E-04	Actual	3.03E+03
Zr	2.69E+03	3.59E-04	N/A	3.59E-04	Actual	2.69E+03

N/A = none available
SOWM = statement of work maximum

CALCULATION SHEET

PROJECT: RPP-WTP
JOB NO.: 24590
CALC NO.: 24590-WTP-M4C-FRP-00001
SHEET REV: 0A
SHEET NO.: 29

BY: E. Berrios
DATE: 12/04/02

SUBJECT: Updated Emissions Run Feed Vector

Table A-5 LAW Radionuclide Comparison with SOW Maximums

Analyte	Ci	Ci/mol Na	Bq/mol Na	CM	Selected Bq/mol Na	Basis	Selected Ci/mol Na	Selected Ci
106Ru	3.05E-04	4.08E-11	1.51E+00	N/A	1.51E+00	Actual	4.08E-11	3.05E-04
113mCd	3.24E+02	4.33E-05	1.60E+06	N/A	1.60E+06	Actual	4.33E-05	3.24E+02
125Sb	4.02E+03	5.38E-04	1.99E+07	N/A	1.99E+07	Actual	5.38E-04	4.02E+03
126Sn	3.02E+01	4.04E-06	1.49E+05	N/A	1.49E+05	Actual	4.04E-06	3.02E+01
129I	1.13E+00	1.51E-07	5.59E+03	N/A	5.59E+03	Actual	1.51E-07	1.13E+00
134Cs	1.45E+04	1.94E-03	7.17E+07	N/A	7.17E+07	Actual	1.94E-03	1.45E+04
137Cs	5.65E+06	7.56E-01	2.80E+10	2.00E+10	2.00E+10	SOWM	5.41E-01	4.04E+06
137mBa	5.35E+06	7.15E-01	2.65E+10	N/A	2.65E+10	Actual	7.15E-01	5.35E+06
14C	5.34E+01	7.14E-06	2.64E+05	N/A	2.64E+05	Actual	7.14E-06	5.34E+01
151Sm	4.99E+04	6.67E-03	2.47E+08	N/A	2.47E+08	Actual	6.67E-03	4.99E+04
152Eu	2.63E+02	3.52E-05	1.30E+06	N/A	1.30E+06	Actual	3.52E-05	2.63E+02
154Eu	2.46E+03	3.29E-04	1.22E+07	4.30E+06	4.30E+06	SOWM	1.16E-04	8.69E+02
155Eu	1.50E+03	2.01E-04	7.42E+06	N/A	7.42E+06	Actual	2.01E-04	1.50E+03
226Ra	4.65E-04	6.22E-11	2.30E+00	N/A	2.30E+00	Actual	6.22E-11	4.65E-04
227Ac	5.18E-03	6.93E-10	2.56E+01	N/A	2.56E+01	Actual	6.93E-10	5.18E-03
228Ra	9.05E-01	1.21E-07	4.48E+03	N/A	4.48E+03	Actual	1.21E-07	9.05E-01
229Th	2.13E-02	2.85E-09	1.05E+02	N/A	1.05E+02	Actual	2.85E-09	2.13E-02
231Pa	1.51E-02	2.02E-09	7.47E+01	N/A	7.47E+01	Actual	2.02E-09	1.51E-02
232Th	1.12E-01	1.50E-08	5.54E+02	N/A	5.54E+02	Actual	1.50E-08	1.12E-01
232U	5.08E-01	6.79E-08	2.51E+03	N/A	2.51E+03	Actual	6.79E-08	5.08E-01
233U	2.08E+00	2.78E-07	1.03E+04	N/A	1.03E+04	Actual	2.78E-07	2.08E+00
234U	1.21E+00	1.62E-07	5.99E+03	N/A	5.99E+03	Actual	1.62E-07	1.21E+00
235U	4.67E-02	6.24E-09	2.31E+02	N/A	2.31E+02	Actual	6.24E-09	4.67E-02
236U	1.40E-01	1.87E-08	6.93E+02	N/A	6.93E+02	Actual	1.87E-08	1.40E-01
237Np	5.56E+00	7.43E-07	2.75E+04	7.78E+02	7.78E+02	SOWM	2.10E-08	1.57E-01
238Pu	1.47E+01	1.97E-06	7.27E+04	2.06E+03	2.06E+03	SOWM	5.56E-08	4.16E-01
238U	9.00E-01	1.20E-07	4.45E+03	N/A	4.45E+03	Actual	1.20E-07	9.00E-01
239Pu	1.74E+02	2.33E-05	8.61E+05	2.44E+04	2.44E+04	SOWM	6.58E-07	4.92E+00
240Pu	3.08E+01	4.12E-06	1.52E+05	4.31E+03	4.31E+03	SOWM	1.17E-07	8.72E-01
241Am	2.47E+03	3.30E-04	1.22E+07	3.46E+05	3.46E+05	SOWM	9.35E-06	6.99E+01
241Pu	7.23E+02	9.67E-05	3.58E+06	1.01E+05	1.01E+05	SOWM	2.74E-06	2.05E+01
242Cm	6.23E+00	8.33E-07	3.08E+04	8.72E+02	8.72E+02	SOWM	2.36E-08	1.76E-01
242Pu	3.87E-03	5.18E-10	1.91E+01	5.42E-01	5.42E-01	SOWM	1.46E-11	1.10E-04
243Am	1.01E-01	1.35E-08	5.00E+02	1.41E+01	1.41E+01	SOWM	3.82E-10	2.86E-03
243Cm	5.18E-01	6.93E-08	2.56E+03	7.25E+01	7.25E+01	SOWM	1.96E-09	1.47E-02
244Cm	3.60E+00	4.81E-07	1.78E+04	5.04E+02	5.04E+02	SOWM	1.36E-08	1.02E-01
3H	7.14E+02	9.55E-05	3.53E+06	N/A	3.53E+06	Actual	9.55E-05	7.14E+02
59Ni	5.05E+00	6.75E-07	2.50E+04	N/A	2.50E+04	Actual	6.75E-07	5.05E+00
60Co	4.04E+02	5.40E-05	2.00E+06	3.70E+05	3.70E+05	SOWM	1.00E-05	7.48E+01
63Ni	4.79E+02	6.41E-05	2.37E+06	N/A	2.37E+06	Actual	6.41E-05	4.79E+02
79Se	4.44E+00	5.94E-07	2.20E+04	N/A	2.20E+04	Actual	5.94E-07	4.44E+00
90Sr	3.02E+05	4.04E-02	1.49E+09	8.00E+08	8.00E+08	SOWM	2.16E-02	1.62E+05
90Y	3.02E+05	4.04E-02	1.49E+09	N/A	1.49E+09	Actual	4.04E-02	3.02E+05
93mNb	5.95E+01	7.96E-06	2.94E+05	N/A	2.94E+05	Actual	7.96E-06	5.95E+01
93Zr	7.53E+01	1.01E-05	3.73E+05	N/A	3.73E+05	Actual	1.01E-05	7.53E+01
99Tc	1.17E+03	1.56E-04	5.79E+06	7.10E+06	7.10E+06	SOWM	1.92E-04	1.44E+03

NA = none available
SOWM = Statement of Work maximum

CALCULATION SHEET

PROJECT: RPP-WTP
JOB NO.: 24590
CALC NO.: 24590-WTP-M4C-FRP-00001
SHEET REV: 0A
SHEET NO.: 30

BY: E. Berrios
DATE: 12/04/02

SUBJECT: Updated Emissions Run Feed Vector

Table A-6 LAW Chemical Analytes Feed Charge Balance

Analyte	Charge	mol	Total Charge
Ag	1	9.04E+02	9.04E+02
Al	3	1.87E+06	5.61E+06
As	5	4.57E+03	2.28E+04
B	3	4.83E+04	1.45E+05
Ba	2	7.48E+02	1.50E+03
Be	0	1.76E+03	0.00E+00
Bi	3	1.51E+03	4.54E+03
Ca	2	2.99E+05	5.98E+05
Cd	2	2.99E+04	5.98E+04
Ce	3	2.26E+03	6.77E+03
Cl	-1	6.66E+05	-6.66E+05
CN	0	4.19E+03	0.00E+00
Co	0	2.43E+03	0.00E+00
Cr	3	1.50E+05	4.49E+05
Cu	2	1.65E+03	3.31E+03
F	-1	1.50E+06	-1.50E+06
Fe	3	7.48E+04	2.24E+05
Hg	2	1.05E+02	2.09E+02
K	1	1.35E+06	1.35E+06
La	3	6.21E+02	1.86E+03
Li	1	2.96E+04	2.96E+04
Mg	2	1.33E+04	2.67E+04
Mn	4	3.64E+04	1.46E+05
Mo	0	3.88E+03	0.00E+00
Na	1	7.48E+06	7.48E+06
Nd	0	2.45E+03	0.00E+00
NH3	0	1.48E+05	0.00E+00
Ni	2	2.24E+04	4.49E+04
NO2	-1	2.84E+06	-2.84E+06
NO3	-1	5.98E+06	-5.98E+06
OH	-1	2.25E+07	-2.25E+07
Oxalate	-2	3.74E+06	-7.48E+06
Pb	2	5.09E+03	1.02E+04
Pd	2	6.02E+01	1.20E+02
PO4	-3	9.72E+05	-2.92E+06
Pr	0	5.06E+00	0.00E+00
Rb	0	1.95E+02	0.00E+00
Rh	0	8.04E+02	0.00E+00
Ru	0	8.90E+02	0.00E+00
Sb	0	1.55E+03	0.00E+00
Se	0	2.96E+03	0.00E+00
Si	4	1.26E+05	5.04E+05
SO4	-2	5.23E+05	-1.05E+06
Sr	2	3.61E+02	7.21E+02
Ta	0	4.28E+02	0.00E+00

CALCULATION SHEET

PROJECT: RPP-WTP
JOB NO.: 24590
CALC NO.: 24590-WTP-M4C-FRP-00001
SHEET REV: 0A
SHEET NO.: 31

BY: E. Berríos
DATE: 12/04/02

SUBJECT: Updated Emissions Run Feed Vector

Analyte	Charge	mol	Total Charge
Te	0	5.59E+00	0.00E+00
Th	0	3.13E+02	0.00E+00
Ti	4	7.22E+02	2.89E+03
TIC as CO3	-2	2.24E+06	-4.49E+06
Tl	0	3.09E+03	0.00E+00
U(total)	0	8.97E+03	0.00E+00
V	0	3.10E+03	0.00E+00
W	0	2.92E+03	0.00E+00
Y	0	2.92E+02	0.00E+00
Zn	2	3.03E+03	6.06E+03
Zr	4	2.69E+03	1.07E+04
Total charge			-32652326

CALCULATION SHEET

PROJECT: RPP-WTP
JOB NO.: 24590
CALC NO.: 24590-WTP-M4C-FRP-00001
SHEET REV: 0A
SHEET NO.: 32

BY: E. Berrios
DATE: 12/04/02

SUBJECT: Updated Emissions Run Feed Vector

Table A-7 LAW Radionuclide Feed Charge Balance

Analyte	Charge	Ci/kmol	Ci	mol	Total Charge
106Ru	0		3.05E-04		0.00E+00
113mCd	0		3.24E+02		0.00E+00
125Sb	3	1.30E+08	4.02E+03	3.09E-02	9.28E-02
126Sn	2	1.43E+03	3.02E+01	2.11E+01	4.22E+01
129I	-1	2.28E+01	1.13E+00	4.96E+01	-4.96E+01
134Cs	0		1.45E+04		0.00E+00
137Cs	1	1.19E+07	4.04E+06	3.40E+02	3.40E+02
137mBa	0		5.35E+06		0.00E+00
14C	4	6.26E+04	5.34E+01	8.53E-01	3.41E+00
151Sm	3	3.97E+06	4.99E+04	1.26E+01	3.77E+01
152Eu	3	2.64E+07	2.63E+02	9.96E-03	2.99E-02
154Eu	3	4.16E+07	8.69E+02	2.09E-02	6.27E-02
155Eu	3	7.53E+07	1.50E+03	1.99E-02	5.98E-02
226Ra	0		4.65E-04		0.00E+00
227Ac	0		5.18E-03		0.00E+00
228Ra	0		9.05E-01		0.00E+00
229Th	0		2.13E-02		0.00E+00
231Pa	0		1.51E-02		0.00E+00
232Th	4	2.55E-02	1.12E-01	4.39E+03	1.76E+04
232U	0		5.08E-01		0.00E+00
233U	6	2.25E+03	2.08E+00	9.24E-01	5.55E+00
234U	6	1.45E+03	1.21E+00	8.34E-01	5.01E+00
235U	6	5.08E-01	4.67E-02	9.19E+01	5.52E+02
236U	6	1.52E+01	1.40E-01	9.21E+00	5.53E+01
237Np	4	1.67E+02	1.57E-01	9.42E-01	3.77E+00
238Pu	4	4.08E+06	4.16E-01	1.02E-04	4.08E-04
238U	6	8.00E-02	9.00E-01	1.13E+04	6.75E+04
239Pu	4	1.48E+04	4.92E+00	3.33E-01	1.33E+00
240Pu	4	5.45E+04	8.72E-01	1.60E-02	6.40E-02
241Am	3	8.26E+05	6.99E+01	8.46E-02	2.54E-01
241Pu	4	2.48E+07	2.05E+01	8.25E-04	3.30E-03
242Cm	0		1.76E-01		0.00E+00
242Pu	0		1.10E-04		0.00E+00
243Am	0		2.86E-03		0.00E+00
243Cm	3	1.23E+07	1.47E-02	1.19E-06	3.58E-06
244Cm	3	2.62E+07	1.02E-01	3.89E-06	1.17E-05
3H	1	2.90E+07	7.14E+02	2.46E-02	2.46E-02
59Ni	0		5.05E+00		0.00E+00
60Co	3	6.78E+07	7.48E+01	1.10E-03	3.31E-03
63Ni	2	3.57E+06	4.79E+02	1.34E-01	2.68E-01
79Se	0		4.44E+00		0.00E+00
90Sr	2	1.24E+07	1.62E+05	1.30E+01	2.61E+01
90Y	0		3.02E+05		0.00E+00
93mNb	0		5.95E+01		0.00E+00
93Zr	0		7.53E+01		0.00E+00

CALCULATION SHEET

PROJECT: RPP-WTP
JOB NO.: 24590
CALC NO.: 24590-WTP-M4C-FRP-00001
SHEET REV: 0A
SHEET NO.: 33

BY: E. Berríos
DATE: 12/04/02

SUBJECT: Updated Emissions Run Feed Vector

Analyte	Charge	Ci/kmol	Ci	mol	Total Charge
99Tc	7	1.68E+03	1.44E+03	8.54E+02	5.98E+03
Total charge					92071

CALCULATION SHEET

PROJECT: RPP-WTP
JOB NO.: 24590
CALC NO.: 24590-WTP-M4C-FRP-00001
SHEET REV: 0A
SHEET NO.: 34

BY: E. Berríos
DATE: 12/04/02

SUBJECT: Updated Emissions Run Feed Vector

Table A-8 Adjustment of Chemical Analytes Positive Charges

Analyte	mol	Charge	Adjusted Total Charge	Adjusted moles	Final mol/mol Na
Ag	9.04E+02	1	1.76E+03	1.76E+03	1.21E-04
Al	5.61E+06	3	1.09E+07	3.63E+06	2.50E-01
As	2.28E+04	5	4.43E+04	8.86E+03	6.11E-04
B	1.45E+05	3	2.81E+05	9.38E+04	6.46E-03
Ba	1.50E+03	2	2.90E+03	1.45E+03	1.00E-04
Be	0.00E+00	0			
Bi	4.54E+03	3	8.80E+03	2.93E+03	2.02E-04
Ca	5.98E+05	2	1.16E+06	5.81E+05	4.00E-02
Cd	5.98E+04	2	1.16E+05	5.81E+04	4.00E-03
Ce	6.77E+03	3	1.31E+04	4.38E+03	3.02E-04
Cl	-6.66E+05	-1			
CN	0.00E+00	0			
Co	0.00E+00	0			
Cr	4.49E+05	3	8.71E+05	2.90E+05	2.00E-02
Cu	3.31E+03	2	6.42E+03	3.21E+03	2.21E-04
F	-1.50E+06	-1			
Fe	2.24E+05	3	4.35E+05	1.45E+05	1.00E-02
Hg	2.09E+02	2	4.06E+02	2.03E+02	1.40E-05
K	1.35E+06	1	2.61E+06	2.61E+06	1.80E-01
La	1.86E+03	3	3.61E+03	1.20E+03	8.30E-05
Li	2.96E+04	1	5.74E+04	5.74E+04	3.95E-03
Mg	2.67E+04	2	5.18E+04	2.59E+04	1.78E-03
Mn	1.46E+05	4	2.83E+05	7.07E+04	4.87E-03
Mo	0.00E+00	0			
Na	7.48E+06	1	1.45E+07	1.45E+07	1.00E+00
Nd	0.00E+00	0			
NH3	0.00E+00	0			
Ni	4.49E+04	2	8.71E+04	4.35E+04	3.00E-03
NO2	-2.84E+06	-1			
NO3	-5.98E+06	-1			
OH	-2.25E+07	-1			
Oxalate	-7.48E+06	-2			
Pb	1.02E+04	2	1.97E+04	9.87E+03	6.80E-04
Pd	1.20E+02	2	2.33E+02	1.17E+02	8.04E-06
PO4	-2.92E+06	-3			
Pr	0.00E+00	0			
Rb	0.00E+00	0			
Rh	0.00E+00	0			
Ru	0.00E+00	0			
Sb	0.00E+00	0			
Se	0.00E+00	0			
Si	5.04E+05	4	9.78E+05	2.44E+05	1.68E-02
SO4	-1.05E+06	-2			
Sr	7.21E+02	2	1.40E+03	7.00E+02	4.82E-05

CALCULATION SHEET

PROJECT: RPP-WTP
JOB NO.: 24590
CALC NO.: 24590-WTP-M4C-FRP-00001
SHEET REV: 0A
SHEET NO.: 35

BY: E. Berríos
DATE: 12/04/02

SUBJECT: Updated Emissions Run Feed Vector

Analyte	mol	Charge	Adjusted Total Charge	Adjusted moles	Final mol/mol Na
Ta	0.00E+00	0			
Te	0.00E+00	0			
Th	0.00E+00	0			
Ti	2.89E+03	4	5.61E+03	1.40E+03	9.66E-05
TIC as CO3	-4.49E+06	-2			
Tl	0.00E+00	0			
U(total)	0.00E+00	0			
V	0.00E+00	0			
W	0.00E+00	0			
Y	0.00E+00	0			
Zn	6.06E+03	2	1.18E+04	5.88E+03	4.05E-04
Zr	1.07E+04	4	2.09E+04	5.21E+03	3.59E-04

CALCULATION SHEET

PROJECT: RPP-WTP
JOB NO.: 24590
CALC NO.: 24590-WTP-M4C-FRP-00001
SHEET REV: 0A
SHEET NO.: 36

BY: E. Berríos
DATE: 12/04/02

SUBJECT: Updated Emissions Run Feed Vector

Table A-9 Adjustment of Radionuclide Positive Charges

Analyte	mol	charge	Adjusted total charge	Adjusted Moles	Adjusted Ci	Bq/mol Na
106Ru	0.00E+00	0				
113mCd	0.00E+00	0				
125Sb	3.09E-02	3	1.80E-01	6.00E-02	7.80E+03	1.99E+07
126Sn	2.11E+01	2	8.20E+01	4.10E+01	5.86E+01	1.49E+05
129I	4.96E+01	-1				
134Cs	0.00E+00	0				
137Cs	3.40E+02	1	6.59E+02	6.59E+02	7.85E+06	2.00E+10
137mBa	0.00E+00	0				
14C	8.53E-01	4	6.62E+00	1.66E+00	1.04E+02	2.64E+05
151Sm	1.26E+01	3	7.32E+01	2.44E+01	9.68E+04	2.47E+08
152Eu	9.96E-03	3	5.80E-02	1.93E-02	5.10E+02	1.30E+06
154Eu	2.09E-02	3	1.22E-01	4.05E-02	1.69E+03	4.30E+06
155Eu	1.99E-02	3	1.16E-01	3.87E-02	2.91E+03	7.42E+06
226Ra	0.00E+00	0				
227Ac	0.00E+00	0				
228Ra	0.00E+00	0				
229Th	0.00E+00	0				
231Pa	0.00E+00	0				
232Th	4.39E+03	4	3.41E+04	8.52E+03	2.17E-01	5.54E+02
232U	0.00E+00	0				
233U	9.24E-01	6	1.08E+01	1.79E+00	4.04E+00	1.03E+04
234U	8.34E-01	6	9.72E+00	1.62E+00	2.35E+00	5.99E+03
235U	9.19E+01	6	1.07E+03	1.78E+02	9.06E-02	2.31E+02
236U	9.21E+00	6	1.07E+02	1.79E+01	2.72E-01	6.93E+02
237Np	9.42E-01	4	7.31E+00	1.83E+00	3.05E-01	7.78E+02
238Pu	1.02E-04	4	7.91E-04	1.98E-04	8.07E-01	2.06E+03
238U	1.13E+04	6	1.31E+05	2.18E+04	1.75E+00	4.45E+03
239Pu	3.33E-01	4	2.58E+00	6.46E-01	9.56E+00	2.44E+04
240Pu	1.60E-02	4	1.24E-01	3.10E-02	1.69E+00	4.31E+03
241Am	8.46E-02	3	4.93E-01	1.64E-01	1.36E+02	3.46E+05
241Pu	8.25E-04	4	6.40E-03	1.60E-03	3.97E+01	1.01E+05
242Cm	0.00E+00	0				
242Pu	0.00E+00	0				
243Am	0.00E+00	0				
243Cm	1.19E-06	3	6.94E-06	2.31E-06	2.84E-02	7.25E+01
244Cm	3.89E-06	3	2.26E-05	7.55E-06	1.98E-01	5.04E+02
3H	2.46E-02	1	4.78E-02	4.78E-02	1.39E+03	3.53E+06
59Ni	0.00E+00	0				
60Co	1.10E-03	3	6.42E-03	2.14E-03	1.45E+02	3.70E+05
63Ni	1.34E-01	2	5.21E-01	2.60E-01	9.30E+02	2.37E+06
79Se	0.00E+00	0				
90Sr	1.30E+01	2	5.06E+01	2.53E+01	3.14E+05	8.00E+08
90Y	0.00E+00	0				
93mNb	0.00E+00	0				

CALCULATION SHEET

PROJECT: RPP-WTP
JOB NO.: 24590
CALC NO.: 24590-WTP-M4C-FRP-00001
SHEET REV: 0A
SHEET NO.: 37

BY: E. Berríos
DATE: 12/04/02

SUBJECT: Updated Emissions Run Feed Vector

93Zr	0.00E+00	0				
99Tc	8.54E+02	7	1.16E+04	1.66E+03	2.79E+03	7.10E+06

CALCULATION SHEET

PROJECT: RPP-WTP
JOB NO.: 24590
CALC NO.: 24590-WTP-M4C-FRP-00001
SHEET REV: 0A
SHEET NO.: 38

BY: E. Berríos
DATE: 12/04/02

SUBJECT: Updated Emissions Run Feed Vector

Table A-10 LAW Chemical Analytes Emissions Feed Quantities

Analyte	mol/mol Na	Analyte	mol/mol Na
Ag	1.21E-04	NO2	1.96E-01
Al	2.50E-01	NO3	4.12E-01
As	6.11E-04	OH	1.55E+00
B	6.46E-03	Oxalate	2.58E-01
Ba	1.00E-04	Pb	6.80E-04
Be	1.21E-04	Pd	8.04E-06
Bi	2.02E-04	PO4	6.70E-02
Ca	4.00E-02	Pr	3.49E-07
Cd	4.00E-03	Rb	1.35E-05
Ce	3.02E-04	Rh	5.54E-05
Cl	4.59E-02	Ru	6.13E-05
CN	2.89E-04	Sb	1.07E-04
Co	1.67E-04	Se	2.04E-04
Cr	2.00E-02	Si	1.68E-02
Cu	2.21E-04	SO4	3.61E-02
F	1.03E-01	Sr	4.82E-05
Fe	1.00E-02	Ta	2.95E-05
Hg	1.40E-05	Te	3.85E-07
K	1.80E-01	Th	2.15E-05
La	8.30E-05	Ti	9.66E-05
Li	3.95E-03	TIC as CO3	1.55E-01
Mg	1.78E-03	Tl	2.13E-04
Mn	4.87E-03	U(total)	6.18E-04
Mo	2.67E-04	V	2.14E-04
Na	1.00E+00	W	2.01E-04
Nd	1.69E-04	Y	2.02E-05
NH3	1.02E-02	Zn	4.05E-04
Ni	3.00E-03	Zr	3.59E-04

CALCULATION SHEET

PROJECT: RPP-WTP
JOB NO.: 24590
CALC NO.: 24590-WTP-M4C-FRP-00001
SHEET REV: 0A
SHEET NO.: 39

BY: E. Berríos
DATE: 12/04/02

SUBJECT: Updated Emissions Run Feed Vector

Table A-11 LAW Radionuclide Emissions Feed Quantities

Analyte	Bq/mol Na	Analyte	Bq/mol Na
106Ru	7.78E-01	236U	6.93E+02
113mCd	8.26E+05	237Np	7.78E+02
125Sb	1.99E+07	238Pu	2.06E+03
126Sn	1.49E+05	238U	4.45E+03
129I	2.88E+03	239Pu	2.44E+04
134Cs	3.70E+07	240Pu	4.31E+03
137Cs	2.00E+10	241Am	3.46E+05
137mBa	1.36E+10	241Pu	1.01E+05
14C	2.64E+05	242Cm	4.49E+02
151Sm	2.47E+08	242Pu	2.79E-01
152Eu	1.30E+06	243Am	7.29E+00
154Eu	4.30E+06	243Cm	7.25E+01
155Eu	7.42E+06	244Cm	5.04E+02
226Ra	1.19E+00	3H	3.53E+06
227Ac	1.32E+01	59Ni	1.29E+04
228Ra	2.31E+03	60Co	3.70E+05
229Th	5.43E+01	63Ni	2.37E+06
231Pa	3.85E+01	79Se	1.13E+04
232Th	5.54E+02	90Sr	8.00E+08
232U	1.30E+03	90Y	7.70E+08
233U	1.03E+04	93mNb	1.52E+05
234U	5.99E+03	93Zr	1.92E+05
235U	2.31E+02	99Tc	7.10E+06

Appendix B HLW Calculations

CALCULATION SHEET

PROJECT: RPP-WTP
JOB NO.: 24590
CALC NO.: 24590-WTP-M4C-FRP-00001
SHEET REV: 0A
SHEET NO.: 41

BY: E. Berríos
DATE: 12/04/02

SUBJECT: Updated Emissions Run Feed Vector

Table B-1 HLW Chemical Analytes Feed Quantities in kg

Analyte	Unit	Tank								
		AY-101	AY-102	AZ-101	AZ-102	C-104	C-106	SY-102	AW-104	C-107
Ag	kg	1.17E+02	2.52E+01	4.88E+01	2.37E+02	1.06E+03	2.63E+01	2.98E+01	2.42E+01	2.94E+02
Al	kg	2.71E+04	3.87E+04	1.61E+04	1.99E+04	9.01E+04	1.83E+03	2.28E+04	3.59E+03	5.86E+04
As	kg	9.37E+00	2.09E+01	1.73E+01	8.60E+00	4.87E+01	8.79E-01	5.95E+00	1.50E+01	9.95E+00
B	kg	1.21E+02	3.52E+01	7.83E+01	1.52E+02	1.79E+03	8.98E+00	2.90E+01	8.06E+00	2.08E+02
Ba	kg	2.63E+02	6.84E+02	1.94E+02	0.00E+00	1.47E+02	1.52E+01	2.09E+01	8.27E+00	7.29E+02
Be	kg	2.17E+00	2.63E+00	2.75E+00	1.97E+00	3.81E+01	1.10E-01	2.04E+00	1.11E+00	1.56E+00
Bi	kg	2.13E+00	1.52E+02	1.97E+01	2.53E+01	4.80E+01	1.11E-01	2.80E+03	1.60E+00	1.04E+04
Ca	kg	1.19E+03	4.59E+03	0.00E+00	6.92E+02	2.98E+03	7.85E+01	1.07E+03	9.05E+02	1.24E+03
Cd	kg	6.18E+01	1.03E+02	1.88E+03	2.71E+03	1.03E+03	2.11E+00	1.20E+02	2.94E+01	9.52E+01
Ce	kg	2.96E+02	7.13E+02	2.30E+02	1.41E+02	7.09E+01	2.34E+01	3.91E+01	1.50E+01	7.79E+02
Cl	kg	1.65E+02	1.24E+02	2.92E+01	9.39E+01	7.99E+02	3.78E+00	1.60E+03	5.58E+02	8.70E+02
CN	kg	0.00E+00	0.00E+00	0.00E+00	5.64E+00	2.09E+01	3.53E-01	0.00E+00	0.00E+00	6.11E+00
Co	kg	1.56E+01	2.37E+01	1.23E+01	1.13E+01	9.74E+00	1.11E+00	7.91E+00	3.00E+00	2.65E+01
Cr	kg	1.20E+03	1.48E+03	1.64E+02	4.56E+02	1.46E+03	5.71E+01	1.34E+04	1.61E+02	9.30E+02
Cu	kg	9.75E+01	2.01E+02	6.37E+01	3.80E+01	1.34E+02	6.86E+00	1.85E+01	1.45E+01	2.28E+02
F	kg	9.48E+02	2.49E+02	1.41E+03	4.79E+02	3.46E+04	2.38E+00	5.92E+02	7.88E+02	6.39E+03
Fe	kg	3.57E+04	8.69E+04	2.21E+04	2.32E+04	2.76E+04	3.05E+03	7.61E+03	2.28E+03	1.03E+05
Hg	kg	1.20E+01	1.13E+02	5.58E-01	3.33E+00	8.29E+03	4.39E+00	5.82E+00	0.00E+00	6.70E+01
K	kg	2.93E+02	5.23E+02	9.56E+02	1.51E+03	1.33E+03	2.11E+01	7.63E+02	1.75E+03	4.47E+02
La	kg	1.23E+03	1.12E+03	9.85E+02	7.93E+02	4.87E+01	1.23E+01	4.82E+01	2.00E+01	2.70E+02
Li	kg	2.57E+00	4.34E+01	1.70E+02	1.65E+00	6.05E+00	1.33E+00	2.49E+01	3.11E+00	1.67E+02
Mg	kg	5.02E+02	1.74E+03	1.78E+02	1.78E+02	2.06E+02	2.02E+01	2.33E+02	2.00E+02	4.77E+02
Mn	kg	2.04E+03	1.15E+04	2.84E+02	5.08E+02	7.01E+03	7.59E+02	1.78E+03	7.87E+02	5.02E+03
Mo	kg	1.19E+01	9.17E+00	1.23E+01	2.02E+01	2.40E+01	3.85E-01	0.00E+00	1.29E+01	4.58E+01
Na	kg	4.78E+04	5.33E+04	2.63E+04	2.67E+04	1.78E+05	2.45E+03	7.46E+04	3.31E+04	9.52E+04
Nd	kg	7.41E+02	1.02E+03	5.99E+02	4.90E+02	1.07E+02	3.53E+01	6.83E+01	1.50E+01	6.33E+02
NH3	kg	3.62E+02	1.63E+03	0.00E+00	0.00E+00	2.25E+02	0.00E+00	0.00E+00	0.00E+00	0.00E+00
Ni	kg	1.33E+03	2.11E+03	1.37E+03	1.46E+03	2.63E+03	1.06E+02	2.27E+02	6.29E+01	3.09E+03
NO2	kg	1.35E+04	5.16E+01	1.10E+04	1.67E+04	3.66E+04	8.08E+01	2.31E+04	1.01E+04	3.53E+04
NO3	kg	1.14E+03	2.91E+01	1.03E+04	6.87E+03	1.96E+04	1.18E+01	4.26E+04	1.75E+04	4.78E+04
OH	kg	0.00E+00	0.00E+00	1.39E+03	2.02E+03	0.00E+00	0.00E+00	4.11E+03	1.27E+03	2.29E+05
Oxalate	kg	1.92E+04	1.77E+03	1.47E+03	1.49E+03	5.61E+03	6.92E+01	3.36E+04	6.14E+02	7.36E+02

CALCULATION SHEET

PROJECT: RPP-WTP
JOB NO.: 24590
CALC NO.: 24590-WTP-M4C-FRP-00001
SHEET REV: 0A
SHEET NO.: 42

BY: E. Berrios
DATE: 12/04/02

SUBJECT: Updated Emissions Run Feed Vector

Analyte	Unit	Tank								
		AY-101	AY-102	AZ-101	AZ-102	C-104	C-106	SY-102	AW-104	C-107
Pb	kg	9.56E+02	3.52E+03	8.57E+01	2.71E+02	8.36E+02	1.57E+02	5.53E+02	8.16E+01	1.01E+04
Pd	kg	0.00E+00	0.00E+00	3.74E-04	1.62E+01	0.00E+00	3.88E-01	0.00E+00	0.00E+00	0.00E+00
PO4	kg	3.45E+03	9.04E+03	1.06E+02	6.31E+02	3.21E+03	3.75E+02	6.46E+03	1.77E+02	5.88E+04
Pr	kg	0.00E+00	3.01E+02	1.28E+02	9.27E+01	7.00E+01	1.26E+01	0.00E+00	0.00E+00	2.08E+02
Rb	kg	5.93E-01	0.00E+00	3.74E+00	1.39E+00	2.67E+02	9.07E-02	2.41E+01	0.00E+00	8.43E-01
Rh	kg	6.85E+00	0.00E+00	4.70E+01	9.77E+00	1.44E+02	8.92E-01	0.00E+00	0.00E+00	4.36E+01
Ru	kg	0.00E+00	4.36E+02	3.79E+02	4.37E+01	0.00E+00	1.83E+01	0.00E+00	0.00E+00	9.51E+02
Sb	kg	1.18E+01	2.38E+00	2.15E+00	9.88E+00	5.71E+00	9.97E-02	1.81E+00	9.03E+00	2.41E+00
Se	kg	1.96E+01	5.02E-01	7.16E+00	2.79E+00	3.92E+01	2.11E-02	5.90E+00	1.13E+01	5.01E+00
Si	kg	4.31E+02	1.13E+02	4.47E+02	2.49E+03	1.02E+04	4.15E+01	9.40E+02	4.78E+02	1.87E+03
SO4	kg	3.04E+03	1.51E+03	7.59E+03	7.05E+03	3.42E+03	6.06E+01	1.94E+03	7.36E+02	8.43E+03
Sr	kg	6.68E+01	2.28E+02	9.17E+01	4.79E+01	8.75E+01	6.49E+00	3.84E+01	5.31E+00	2.57E+02
Ta	kg	0.00E+00	0.00E+00	2.15E+00	6.53E-01	1.75E+00	8.79E-02	2.49E+00	0.00E+00	8.47E-01
Te	kg	0.00E+00	9.48E+01	2.36E+01	1.54E+01	0.00E+00	3.98E+00	1.48E+00	0.00E+00	1.80E+02
Th	kg	0.00E+00	4.53E+02	7.78E+01	8.93E+01	5.10E+04	1.89E+01	3.29E+02	1.50E+01	6.61E+02
Ti	kg	3.52E+01	1.10E+02	9.62E+00	1.06E+01	9.80E+01	4.09E+00	1.20E+01	1.60E+01	1.24E+02
TIC as CO3	kg	8.09E+04	5.45E+04	7.50E+03	1.90E+04	4.84E+04	3.25E+03	1.14E+04	1.31E+04	1.14E+04
Tl	kg	5.61E-01	2.96E+00	2.15E+00	6.53E-01	9.74E+01	1.24E-01	4.60E-01	3.00E+01	5.43E+00
U(total)	kg	4.67E+02	2.35E+03	1.63E+03	3.50E+03	3.53E+04	4.11E+01	6.77E+02	6.91E+03	9.29E+03
V	kg	9.80E+00	2.98E+01	5.35E+00	8.32E+00	2.72E+01	1.37E+00	9.06E+00	7.53E+00	2.51E+01
W	kg	0.00E+00	0.00E+00	0.00E+00	4.84E+00	9.60E+02	0.00E+00	0.00E+00	0.00E+00	6.75E+02
Y	kg	0.00E+00	9.81E+01	0.00E+00	3.41E+01	2.82E+01	4.46E+00	1.13E+01	1.50E+00	9.48E+01
Zn	kg	5.33E+01	1.52E+02	2.56E+01	2.45E+01	6.08E+02	4.36E+00	9.85E+00	2.80E+01	1.77E+02
Zr	kg	6.93E+02	2.86E+01	7.85E+03	3.81E+03	6.49E+04	2.65E+00	7.51E+01	2.10E+03	7.39E+01

CALCULATION SHEET

PROJECT: RPP-WTP
JOB NO.: 24590
CALC NO.: 24590-WTP-M4C-FRP-00001
SHEET REV: 0A
SHEET NO.: 43

BY: E. Berrios
DATE: 12/04/02

SUBJECT: Updated Emissions Run Feed Vector

Table B-2 HLW Chemical Analytes Feed Quantities in moles

Analyte	MW g/mol	Unit	Tank									
			AY-101	AY-102	AZ-101	AZ-102	C-104	C-106	SY-102	AW-104	C-107	Max Conc *
Ag	107.8	mol	1.08E+03	2.34E+02	4.52E+02	2.20E+03	9.82E+03	2.44E+02	2.76E+02	2.24E+02	2.72E+03	9.82E+03
Al	26.9	mol	1.00E+06	1.43E+06	5.96E+05	7.37E+05	3.34E+06	6.78E+04	8.44E+05	1.33E+05	2.17E+06	3.34E+06
As	74.9	mol	1.25E+02	2.79E+02	2.31E+02	1.15E+02	6.50E+02	1.17E+01	7.94E+01	2.00E+02	1.33E+02	6.50E+02
B	10.8	mol	1.12E+04	3.26E+03	7.25E+03	1.41E+04	1.66E+05	8.31E+02	2.69E+03	7.46E+02	1.93E+04	1.66E+05
Ba	137.3	mol	1.92E+03	4.98E+03	1.41E+03	0.00E+00	1.07E+03	1.11E+02	1.52E+02	6.02E+01	5.31E+03	5.31E+03
Be	9.0	mol	2.41E+02	2.92E+02	3.06E+02	2.19E+02	4.23E+03	1.22E+01	2.27E+02	1.23E+02	1.73E+02	4.23E+03
Bi	208.9	mol	1.02E+01	7.27E+02	9.43E+01	1.21E+02	2.30E+02	5.31E-01	1.34E+04	7.66E+00	4.98E+04	4.98E+04
Ca	40.0	mol	2.97E+04	1.14E+05	0.00E+00	1.73E+04	7.43E+04	1.96E+03	2.67E+04	2.26E+04	3.09E+04	1.14E+05
Cd	112.4	mol	5.50E+02	9.16E+02	1.67E+04	2.41E+04	9.16E+03	1.88E+01	1.07E+03	2.62E+02	8.47E+02	2.41E+04
Ce	140.1	mol	2.11E+03	5.09E+03	1.64E+03	1.01E+03	5.06E+02	1.67E+02	2.79E+02	1.07E+02	5.56E+03	5.56E+03
Cl	35.4	mol	4.65E+03	3.49E+03	8.23E+02	2.65E+03	2.25E+04	1.06E+02	4.51E+04	1.57E+04	2.45E+04	4.51E+04
CN	26.0	mol	0.00E+00	0.00E+00	0.00E+00	2.17E+02	8.04E+02	1.36E+01	0.00E+00	0.00E+00	2.35E+02	8.04E+02
Co	58.9	mol	2.65E+02	4.02E+02	2.09E+02	1.92E+02	1.65E+02	1.88E+01	1.34E+02	5.09E+01	4.50E+02	4.50E+02
Cr	51.9	mol	2.31E+04	2.85E+04	3.15E+03	8.77E+03	2.81E+04	1.10E+03	2.58E+05	3.09E+03	1.79E+04	2.58E+05
Cu	63.5	mol	1.54E+03	3.17E+03	1.00E+03	5.98E+02	2.11E+03	1.08E+02	2.91E+02	2.28E+02	3.59E+03	3.59E+03
F	18.9	mol	4.99E+04	1.31E+04	7.42E+04	2.52E+04	1.82E+06	1.25E+02	3.12E+04	4.15E+04	3.36E+05	1.82E+06
Fe	55.8	mol	6.40E+05	1.56E+06	3.96E+05	4.16E+05	4.95E+05	5.47E+04	1.36E+05	4.09E+04	1.85E+06	1.85E+06
Hg	200.6	mol	5.98E+01	5.63E+02	2.78E+00	1.66E+01	4.13E+04	2.19E+01	2.90E+01	0.00E+00	3.34E+02	4.13E+04
K	39.1	mol	7.49E+03	1.34E+04	2.45E+04	3.86E+04	3.40E+04	5.40E+02	1.95E+04	4.47E+04	1.14E+04	4.47E+04
La	138.9	mol	8.86E+03	8.06E+03	7.09E+03	5.71E+03	3.51E+02	8.86E+01	3.47E+02	1.44E+02	1.94E+03	8.86E+03
Li	6.9	mol	3.72E+02	6.29E+03	2.46E+04	2.39E+02	8.77E+02	1.93E+02	3.61E+03	4.51E+02	2.42E+04	2.46E+04
Mg	24.3	mol	2.07E+04	7.16E+04	7.33E+03	7.33E+03	8.48E+03	8.31E+02	9.59E+03	8.22E+03	1.96E+04	7.16E+04
Mn	54.9	mol	3.72E+04	2.09E+05	5.17E+03	9.25E+03	1.28E+05	1.38E+04	3.24E+04	1.43E+04	9.14E+04	2.09E+05
Mo	95.9	mol	1.24E+02	9.56E+01	1.28E+02	2.11E+02	2.50E+02	4.01E+00	0.00E+00	1.35E+02	4.78E+02	4.78E+02
Na	22.9	mol	2.08E+06	2.32E+06	1.14E+06	1.16E+06	7.74E+06	1.07E+05	3.24E+06	1.44E+06	4.14E+06	1.07E+05
Nd	144.2	mol	5.14E+03	7.07E+03	4.15E+03	3.40E+03	7.42E+02	2.45E+02	4.74E+02	1.04E+02	4.39E+03	7.07E+03
NH3	17	mol	2.13E+04	9.59E+04	0.00E+00	0.00E+00	1.32E+04	0.00E+00	0.00E+00	0.00E+00	0.00E+00	9.59E+04
Ni	58.7	mol	2.27E+04	3.59E+04	2.33E+04	2.49E+04	4.48E+04	1.81E+03	3.87E+03	1.07E+03	5.26E+04	5.26E+04
NO2	46.0	mol	2.93E+05	1.12E+03	2.39E+05	3.63E+05	7.96E+05	1.76E+03	5.02E+05	2.20E+05	7.67E+05	7.96E+05
NO3	62.0	mol	1.84E+04	4.69E+02	1.66E+05	1.11E+05	3.16E+05	1.90E+02	6.87E+05	2.81E+05	7.71E+05	7.71E+05
OH	17.0	mol	0.00E+00	0.00E+00	8.18E+04	1.19E+05	0.00E+00	0.00E+00	2.42E+05	7.47E+04	1.35E+07	1.35E+07

CALCULATION SHEET

PROJECT: RPP-WTP
JOB NO.: 24590
CALC NO.: 24590-WTP-M4C-FRP-00001
SHEET REV: 0A
SHEET NO.: 44

BY: E. Berrios
DATE: 12/04/02

SUBJECT: Updated Emissions Run Feed Vector

Analyte	MW g/mol	Unit	Tank									
			AY-101	AY-102	AZ-101	AZ-102	C-104	C-106	SY-102	AW-104	C-107	Max Conc *
Oxalate	88.0	mol	2.18E+05	2.01E+04	1.67E+04	1.69E+04	6.38E+04	7.86E+02	3.82E+05	6.98E+03	8.36E+03	3.82E+05
Pb	207.2	mol	4.61E+03	1.70E+04	4.14E+02	1.31E+03	4.03E+03	7.58E+02	2.67E+03	3.94E+02	4.87E+04	4.87E+04
Pd	105.4	mol	0.00E+00	0.00E+00	3.52E-03	1.52E+02	0.00E+00	3.65E+00	0.00E+00	0.00E+00	0.00E+00	1.52E+02
PO4	94.9	mol	3.63E+04	9.52E+04	1.12E+03	6.64E+03	3.38E+04	3.95E+03	6.80E+04	1.86E+03	6.19E+05	6.19E+05
Pr	140.9	mol	0.00E+00	2.14E+03	9.08E+02	6.58E+02	4.97E+02	8.94E+01	0.00E+00	0.00E+00	1.48E+03	2.14E+03
Rb	85.5	mol	6.94E+00	0.00E+00	4.37E+01	1.63E+01	3.12E+03	1.06E+00	2.82E+02	0.00E+00	9.86E+00	3.12E+03
Rh	102.9	mol	6.66E+01	0.00E+00	4.57E+02	9.49E+01	1.40E+03	8.67E+00	0.00E+00	0.00E+00	4.24E+02	1.40E+03
Ru	101.1	mol	0.00E+00	4.31E+03	3.75E+03	4.32E+02	0.00E+00	1.81E+02	0.00E+00	0.00E+00	9.41E+03	9.41E+03
Sb	121.7	mol	9.69E+01	1.95E+01	1.77E+01	8.11E+01	4.69E+01	8.19E-01	1.49E+01	7.41E+01	1.98E+01	9.69E+01
Se	78.9	mol	2.48E+02	6.35E+00	9.06E+01	3.53E+01	4.96E+02	2.67E-01	7.47E+01	1.43E+02	6.34E+01	4.96E+02
Si	28.1	mol	1.53E+04	4.02E+03	1.59E+04	8.86E+04	3.63E+05	1.48E+03	3.35E+04	1.70E+04	6.65E+04	3.63E+05
SO4	96.1	mol	3.16E+04	1.57E+04	7.90E+04	7.34E+04	3.56E+04	6.31E+02	2.02E+04	7.66E+03	8.77E+04	8.77E+04
Sr	87.6	mol	7.63E+02	2.60E+03	1.05E+03	5.47E+02	9.99E+02	7.41E+01	4.38E+02	6.06E+01	2.93E+03	2.93E+03
Ta	180.9	mol	0.00E+00	0.00E+00	1.19E+01	3.61E+00	9.67E+00	4.86E-01	1.38E+01	0.00E+00	4.68E+00	1.38E+01
Te	127.6	mol	0.00E+00	7.43E+02	1.85E+02	1.21E+02	0.00E+00	3.12E+01	1.16E+01	0.00E+00	1.41E+03	1.41E+03
Th	232.0	mol	0.00E+00	1.95E+03	3.35E+02	3.85E+02	2.20E+05	8.15E+01	1.42E+03	6.48E+01	2.85E+03	2.20E+05
Ti	47.9	mol	7.35E+02	2.30E+03	2.01E+02	2.21E+02	2.05E+03	8.54E+01	2.51E+02	3.33E+02	2.59E+03	2.59E+03
TIC as CO3	60.0	mol	1.35E+06	9.08E+05	1.25E+05	3.17E+05	8.07E+05	5.42E+04	1.90E+05	2.19E+05	1.90E+05	1.35E+06
Tl	204.4	mol	2.74E+00	1.45E+01	1.05E+01	3.19E+00	4.77E+02	6.07E-01	2.25E+00	1.47E+02	2.66E+01	4.77E+02
U(total)	238.0	mol	1.96E+03	9.87E+03	6.85E+03	1.47E+04	1.48E+05	1.73E+02	2.84E+03	2.90E+04	3.90E+04	1.48E+05
V	50.9	mol	1.93E+02	5.85E+02	1.05E+02	1.63E+02	5.34E+02	2.69E+01	1.78E+02	1.48E+02	4.93E+02	5.85E+02
W	183.9	mol	0.00E+00	0.00E+00	0.00E+00	2.63E+01	5.22E+03	0.00E+00	0.00E+00	0.00E+00	3.67E+03	5.22E+03
Y	88.9	mol	0.00E+00	1.10E+03	0.00E+00	3.84E+02	3.17E+02	5.02E+01	1.27E+02	1.69E+01	1.07E+03	1.10E+03
Zn	65.4	mol	8.15E+02	2.32E+03	3.91E+02	3.75E+02	9.30E+03	6.67E+01	1.51E+02	4.28E+02	2.71E+03	9.30E+03
Zr	91.2	mol	7.60E+03	3.14E+02	8.61E+04	4.18E+04	7.12E+05	2.91E+01	8.23E+02	2.30E+04	8.10E+02	7.12E+05

* Except for Na which is the minimum concentration

CALCULATION SHEET

PROJECT: RPP-WTP
JOB NO.: 24590
CALC NO.: 24590-WTP-M4C-FRP-00001
SHEET REV: 0A
SHEET NO.: 45

BY: E. Berrios
DATE: 12/04/02

SUBJECT: Updated Emissions Run Feed Vector

Table B-3 HLW Radionuclide Feed Quantities in Curies

Analyte	Unit	Tank									
		AY-101	AY-102	AZ-101	AZ-102	C-104	C-106	SY-102	AW-104	C-107	MAX
106Ru	Ci	6.53E-02	7.54E-03	3.86E+02	6.21E+02	1.80E-04	5.77E-06	1.35E-05	1.65E-06	1.13E-02	6.21E+02
113mCd	Ci	1.75E+03	4.83E+00	1.93E+03	8.16E+02	1.93E+01	5.84E+00	1.60E+01	1.50E+00	1.19E+03	1.93E+03
125Sb	Ci	1.34E+01	1.55E+00	6.18E+03	4.93E+03	1.77E+02	4.01E-01	7.54E+00	8.23E-01	7.42E+00	6.18E+03
126Sn	Ci	2.80E+01	2.78E-01	2.31E+01	1.25E+01	1.72E+00	1.81E+00	5.31E-01	4.63E-02	6.37E+01	6.37E+01
129I	Ci	9.40E-02	8.43E-03	1.17E-01	1.40E+00	7.53E-01	8.28E-03	9.30E-02	2.89E-02	4.83E-02	1.40E+00
134Cs	Ci	8.07E-02	2.14E+02	2.81E+02	4.47E+02	4.49E-02	1.00E-02	1.03E-01	2.07E-02	4.90E-01	4.47E+02
137Cs	Ci	5.30E+04	1.61E+05	2.98E+05	4.92E+05	9.55E+04	1.14E+04	6.54E+04	1.33E+04	6.35E+04	4.92E+05
137mBa	Ci	5.02E+04	1.53E+05	2.82E+05	4.66E+05	9.03E+04	1.08E+04	6.19E+04	1.25E+04	6.01E+04	4.66E+05
14C	Ci	8.70E-01	1.74E-01	4.72E-01	4.80E-01	1.86E+00	8.28E-03	5.58E-01	1.27E+00	3.80E+00	3.80E+00
151Sm	Ci	4.29E+05	1.51E+03	1.60E+05	6.69E+04	9.39E+03	1.01E+04	2.94E+03	2.55E+02	6.36E+05	6.36E+05
152Eu	Ci	0.00E+00	6.13E+01	1.31E+02	5.23E+01	2.43E+00	2.85E+00	7.49E-01	7.70E-02	1.17E+02	1.31E+02
154Eu	Ci	4.69E+03	6.77E+03	1.35E+04	7.29E+03	1.10E+03	2.64E+02	1.91E+02	8.75E+00	1.60E+03	1.35E+04
155Eu	Ci	2.28E+03	5.53E+03	1.74E+04	1.30E+04	8.05E+02	1.82E+02	1.05E+02	2.41E+00	1.04E+03	1.74E+04
226Ra	Ci	1.02E-02	3.66E-03	2.32E-04	8.50E-05	6.27E-03	3.93E-04	3.92E-05	3.07E-06	2.16E-02	2.16E-02
227Ac	Ci	5.69E-02	1.29E-02	2.61E-03	7.40E-04	1.09E+02	2.21E-03	4.09E-04	3.14E-05	1.41E-01	1.09E+02
228Ra	Ci	4.11E-02	3.42E-02	3.11E-03	5.30E-03	2.25E+01	2.46E-05	3.02E-02	3.70E-03	4.85E-02	2.25E+01
229Th	Ci	6.53E-04	6.93E-06	1.94E-06	6.83E-07	9.41E-01	2.10E-05	6.77E-04	1.57E-04	2.43E-03	9.41E-01
231Pa	Ci	7.44E-02	3.90E-04	7.77E-03	1.77E-03	2.40E+02	2.82E-03	1.08E-03	8.46E-05	1.92E-01	2.40E+02
232Th	Ci	3.82E-02	6.02E-02	8.12E-03	9.83E-03	4.99E+00	2.53E-03	3.23E-02	8.24E-04	7.28E-02	4.99E+00
232U	Ci	9.37E-02	2.55E-04	2.77E-02	1.07E-02	1.93E+01	1.65E-04	1.04E-01	2.60E-03	5.45E-03	1.93E+01
233U	Ci	3.85E-01	3.72E-06	1.13E-01	4.17E-02	4.13E+02	6.81E-04	4.27E-01	7.83E-03	2.26E-02	4.13E+02
234U	Ci	1.71E-01	1.04E+00	7.86E-01	2.89E+00	2.08E+01	1.34E-02	2.38E-01	3.35E+00	5.63E-01	2.08E+01
235U	Ci	6.94E-03	4.01E-02	2.99E-02	6.88E-02	6.03E-01	5.73E-04	9.99E-03	1.27E-01	1.37E-01	6.03E-01
236U	Ci	5.87E-03	7.55E-02	6.37E-02	1.41E-01	6.48E-01	2.39E-04	5.78E-03	2.76E-01	8.92E-02	6.48E-01
237Np	Ci	1.59E-01	3.95E+00	1.34E+01	1.31E+01	4.40E+00	1.66E-01	7.44E-01	5.29E-02	8.07E-02	1.34E+01
238Pu	Ci	1.91E+02	5.26E+02	1.33E+02	1.79E+02	2.28E+02	3.48E+00	5.55E+02	5.14E+01	6.81E+01	5.55E+02
238U	Ci	1.56E-01	8.00E-01	5.44E-01	1.16E+00	1.17E+01	1.37E-02	2.26E-01	2.30E+00	3.10E+00	1.17E+01
239Pu	Ci	4.89E+02	1.64E+03	1.15E+03	1.54E+03	5.47E+03	7.52E+01	3.82E+03	4.40E+02	2.16E+03	5.47E+03
240Pu	Ci	1.48E+02	3.55E+02	3.46E+02	4.58E+02	1.08E+03	1.54E+01	8.61E+02	1.34E+02	3.93E+02	1.08E+03

CALCULATION SHEET

PROJECT: RPP-WTP
JOB NO.: 24590
CALC NO.: 24590-WTP-M4C-FRP-00001
SHEET REV: 0A
SHEET NO.: 46

BY: E. Berríos
DATE: 12/04/02

SUBJECT: Updated Emissions Run Feed Vector

Analyte	Unit	Tank									
		AY-101	AY-102	AZ-101	AZ-102	C-104	C-106	SY-102	AW-104	C-107	MAX
241Am	Ci	8.79E+03	7.62E+03	2.55E+04	1.88E+04	6.35E+03	2.25E+02	2.35E+04	5.28E+01	6.75E+03	2.55E+04
241Pu	Ci	2.69E+03	4.42E+03	1.02E+04	1.32E+04	1.48E+04	1.84E+02	3.27E+03	3.96E+03	3.73E+03	1.48E+04
242Cm	Ci	1.17E+01	1.40E+01	2.30E+01	6.52E+00	5.38E+00	3.42E-01	5.15E-02	9.84E-04	5.37E+00	2.30E+01
242Pu	Ci	2.67E-02	4.27E-02	5.35E-02	6.57E-02	9.48E-02	1.64E-03	2.05E-01	2.07E-02	2.74E-02	2.05E-01
243Am	Ci	8.83E-01	5.60E-01	5.40E+00	5.61E+00	3.12E-01	2.02E-03	3.96E-01	3.75E-05	3.47E-01	5.61E+00
243Cm	Ci	1.19E+00	1.27E+00	3.36E+00	8.39E-01	4.31E-01	2.74E-02	4.61E-01	1.35E-04	4.21E-01	3.36E+00
244Cm	Ci	4.08E+01	3.03E+01	7.53E+01	4.08E+01	1.50E+01	5.82E-01	1.10E+01	5.89E-04	1.56E+01	7.53E+01
3H	Ci	2.38E+00	7.31E+00	4.05E+00	1.22E+01	5.61E+01	1.45E-01	6.85E-01	7.81E+00	2.99E+01	5.61E+01
59Ni	Ci	1.58E+02	1.10E+02	2.68E+01	1.07E+01	4.58E+00	6.13E+00	2.58E-01	1.66E-02	3.22E+02	3.22E+02
60Co	Ci	4.36E+02	5.81E-01	1.09E+03	7.80E+02	2.72E+02	2.46E-01	8.13E+00	4.03E-01	2.47E+02	1.09E+03
63Ni	Ci	1.48E+04	1.04E+04	2.95E+03	1.19E+03	4.29E+02	5.71E+02	2.40E+01	1.56E+00	3.01E+04	3.01E+04
79Se	Ci	1.37E+01	4.39E-02	4.67E-01	3.51E-01	6.40E+00	2.77E-01	8.79E-02	7.66E-03	1.79E+01	1.79E+01
90Sr	Ci	1.38E+06	5.27E+06	4.94E+06	2.98E+06	4.84E+05	2.82E+05	6.73E+04	1.09E+03	2.24E+06	5.27E+06
90Y	Ci	1.38E+06	5.27E+06	4.94E+06	2.98E+06	4.84E+05	2.82E+05	6.73E+04	1.09E+03	2.24E+06	5.27E+06
93mNb	Ci	4.99E+02	1.70E+00	1.33E+02	5.25E+01	9.90E+00	1.08E+01	3.50E+00	3.04E-01	6.98E+02	6.98E+02
93Zr	Ci	6.09E+02	1.98E+00	2.35E+02	9.69E+01	1.16E+01	1.16E+01	4.31E+00	3.78E-01	7.75E+02	7.75E+02
99Tc	Ci	4.85E+01	1.39E+01	6.41E+01	8.99E+01	5.79E+01	1.03E+00	1.27E+02	1.49E+01	3.79E+01	1.27E+02

CALCULATION SHEET

PROJECT: RPP-WTP
JOB NO.: 24590
CALC NO.: 24590-WTP-M4C-FRP-00001
SHEET REV: 0A
SHEET NO.: 47

BY: E. Berrios
DATE: 12/04/02

SUBJECT: Updated Emissions Run Feed Vector

Table B-4 HLW Waste Oxide Mass Calculation

Analyte	Max Conc mol	MW g/mol	Mass g	Charge	# oxygens/mol oxide	Mass of O grams	Contract Max g/100 g w. ox	Feed Quantity g
Ag	9.82E+03	107.87	1.06E+06	1	0.5	7.86E+04	0.55	3.50E+06
Al	3.34E+06	27	9.01E+07	3	1.5	8.01E+07	14	8.90E+07
As	6.50E+02	74.92	4.87E+04	5	2.5	2.60E+04	0.16	1.02E+06
B	1.66E+05	10.81	1.79E+06	3	1.5	3.98E+06	1.3	8.26E+06
Ba	5.31E+03	137.3	7.29E+05	2	1	8.50E+04	4.5	2.86E+07
Be	4.23E+03	9	3.81E+04	2	1	6.77E+04	0.065	4.13E+05
Bi	4.98E+04	209	1.04E+07	3	1.5	1.19E+06	2.8	1.78E+07
Ca	1.14E+05	40.1	4.59E+06	2	1	1.83E+06	7.1	4.51E+07
Cd	2.41E+04	112.4	2.71E+06	2	1	3.86E+05	4.5	2.86E+07
Ce	5.56E+03	140.1	7.79E+05	3	1.5	1.33E+05	0.81	5.15E+06
Cl	4.51E+04	35.5	0.00E+00	-1	0	0.00E+00	0.33	2.10E+06
CN	8.04E+02	26	0.00E+00	-1	0	0.00E+00	1.6	1.02E+07
Co	4.50E+02	58.9	2.65E+04	3	1.5	1.08E+04	0.45	2.86E+06
Cr	2.58E+05	52	1.34E+07	3	1.5	6.18E+06	0.68	4.32E+06
Cu	3.59E+03	63.5	2.28E+05	2	1	5.74E+04	0.48	3.05E+06
F	1.82E+06	19	0.00E+00	-1	0	0.00E+00	3.5	2.23E+07
Fe	1.85E+06	55.8	1.03E+08	3	1.5	4.43E+07	29	1.84E+08
Hg	4.13E+04	200.6	8.29E+06	2	1	6.61E+05	0.1	6.36E+05
K	4.47E+04	39.1	1.75E+06	1	0.5	3.58E+05	1.3	8.26E+06
La	8.86E+03	138.9	1.23E+06	3	1.5	2.13E+05	2.6	1.65E+07
Li	2.46E+04	6.9	1.70E+05	1	0.5	1.97E+05	0.14	8.90E+05
Mg	7.16E+04	24.3	1.74E+06	2	1	1.15E+06	2.1	1.34E+07
Mn	2.09E+05	54.9	1.15E+07	4	2	6.70E+06	6.5	4.13E+07
Mo	4.78E+02	95.9	4.58E+04	6	3	2.29E+04	0.65	4.13E+06
Na	1.07E+05	23	2.45E+06	1	0.5	8.52E+05	19	1.21E+08
Nd	7.07E+03	144.2	1.02E+06	3	1.5	1.70E+05	1.7	1.08E+07
NH3	9.59E+04	17	0.00E+00	0	0	0.00E+00	1.6	1.02E+07
Ni	5.26E+04	58.7	3.09E+06	2	1	8.42E+05	2.4	1.53E+07
NO2	7.96E+05	46	0.00E+00	-1	0	0.00E+00	(no2/no3)	0.00E+00
NO3	7.71E+05	62	0.00E+00	-1	0	0.00E+00	36	2.29E+08
OH	1.35E+07	17	0.00E+00	-1	0	0.00E+00	N/A*	0.00E+00

CALCULATION SHEET

PROJECT: RPP-WTP
JOB NO.: 24590
CALC NO.: 24590-WTP-M4C-FRP-00001
SHEET REV: 0A
SHEET NO.: 48

BY: E. Berrios
DATE: 12/04/02

SUBJECT: Updated Emissions Run Feed Vector

Analyte	Max Conc mol	MW g/mol	Mass g	Charge	# oxygens/mol oxide	Mass of O grams	Contract Max g/100 g w. ox	Feed Quantity g
Oxalate	3.82E+05	88	0.00E+00	-2	0	0.00E+00	11	6.99E+07
Pb	4.87E+04	207.2	1.01E+07	2	1	7.80E+05	1.1	6.99E+06
Pd	1.52E+02	106.4	1.62E+04	2	1	2.44E+03	0.13	8.26E+05
PO4	6.19E+05	95	0.00E+00	-3	0	0.00E+00	N/A*	0.00E+00
Pr	2.14E+03	140.9	3.01E+05	4	2	6.84E+04	0.35	2.23E+06
Rb	3.12E+03	85.5	2.67E+05	1	0.5	2.50E+04	0.19	1.21E+06
Rh	1.40E+03	102.9	1.44E+05	3	1.5	3.36E+04	0.13	8.26E+05
Ru	9.41E+03	101.1	9.51E+05	4	2	3.01E+05	0.35	2.23E+06
Sb	9.69E+01	121.8	1.18E+04	3	1.5	2.33E+03	0.84	5.34E+06
Se	4.96E+02	79	3.92E+04	4	2	1.59E+04	0.52	3.31E+06
Si	3.63E+05	28.1	1.02E+07	4	2	1.16E+07	19	1.21E+08
SO4	8.77E+04	96.1	0.00E+00	-2	0	0.00E+00	N/A*	0.00E+00
Sr	2.93E+03	87.6	2.57E+05	2	1	4.69E+04	0.52	3.31E+06
Ta	1.38E+01	180.9	2.49E+03	5	2.5	5.51E+02	0.03	1.91E+05
Te	1.41E+03	127.6	1.80E+05	4	2	4.51E+04	0.13	8.26E+05
Th	2.20E+05	232	5.10E+07	4	2	7.03E+06	5	3.18E+07
Ti	2.59E+03	47.9	1.24E+05	4	2	8.28E+04	1.3	8.26E+06
TIC as CO3	1.35E+06	60	0.00E+00	-2	0	0.00E+00	30	1.91E+08
Tl	4.77E+02	204.4	9.74E+04	5	2.5	1.91E+04	0.45	2.86E+06
U(total)	1.48E+05	238	3.53E+07	6	3	7.12E+06	14	8.90E+07
V	5.85E+02	50.9	2.98E+04	3	1.5	1.41E+04	0.032	2.03E+05
W	5.22E+03	183.9	9.60E+05	6	3	2.51E+05	0.24	1.53E+06
Y	1.10E+03	88.9	9.81E+04	3	1.5	2.65E+04	0.16	1.02E+06
Zn	9.30E+03	65.4	6.08E+05	2	1	1.49E+05	0.42	2.67E+06
Zr	7.12E+05	91.2	6.49E+07	4	2	2.28E+07	15	9.54E+07

* N/A = not available

	4.36E+08 g mass		2.0E+08 g O
	4.36E+05 kg		2.0E+05 kg O
Total Mass	6.46E+05 kg	=	6.36E+08 g

CALCULATION SHEET

PROJECT: RPP-WTP
JOB NO.: 24590
CALC NO.: 24590-WTP-M4C-FRP-00001
SHEET REV: 0A
SHEET NO.: 49

BY: E. Berríos
DATE: 12/04/02

SUBJECT: Updated Emissions Run Feed Vector

Table B-5 Chemical Analytes Feed Quantity Comparison

Analyte	Actual (g)	SOW max (g)	Selected (g)	Source
Ag	1.06E+06	3.50E+06	3.50E+06	SOWM
Al	9.01E+07	8.90E+07	8.90E+07	SOWM
As	4.87E+04	1.02E+06	1.02E+06	SOWM
B	1.79E+06	8.26E+06	8.26E+06	SOWM
Ba	7.29E+05	2.86E+07	2.86E+07	SOWM
Be	3.81E+04	4.13E+05	4.13E+05	SOWM
Bi	1.04E+07	1.78E+07	1.78E+07	SOWM
Ca	4.59E+06	4.51E+07	4.51E+07	SOWM
Cd	2.71E+06	2.86E+07	2.86E+07	SOWM
Ce	7.79E+05	5.15E+06	5.15E+06	SOWM
Cl	1.60E+06	2.10E+06	2.10E+06	SOWM
CN	2.09E+04	1.02E+07	1.02E+07	SOWM
Co	2.65E+04	2.86E+06	2.86E+06	SOWM
Cr	1.34E+07	4.32E+06	4.32E+06	SOWM
Cu	2.28E+05	3.05E+06	3.05E+06	SOWM
F	3.46E+07	2.23E+07	2.23E+07	SOWM
Fe	1.03E+08	1.84E+08	1.84E+08	SOWM
Hg	8.29E+06	6.36E+05	6.36E+05	SOWM
K	1.75E+06	8.26E+06	8.26E+06	SOWM
La	1.23E+06	1.65E+07	1.65E+07	SOWM
Li	1.70E+05	8.90E+05	8.90E+05	SOWM
Mg	1.74E+06	1.34E+07	1.34E+07	SOWM
Mn	1.15E+07	4.13E+07	4.13E+07	SOWM
Mo	4.58E+04	4.13E+06	4.13E+06	SOWM
Na	2.45E+06	1.21E+08	1.21E+08	SOWM
Nd	1.02E+06	1.08E+07	1.08E+07	SOWM
NH3	1.63E+06	1.02E+07	1.02E+07	SOWM
Ni	3.09E+06	1.53E+07	1.53E+07	SOWM
NO2	3.66E+07		3.66E+07	Actual
NO3	4.78E+07	2.29E+08	2.29E+08	SOWM
OH	2.29E+08		2.29E+08	Actual
Oxalate	3.36E+07	6.99E+07	6.99E+07	SOWM
Pb	1.01E+07	6.99E+06	6.99E+06	SOWM
Pd	1.62E+04	8.26E+05	8.26E+05	SOWM
PO4	5.88E+07		5.88E+07	Actual
Pr	3.01E+05	2.23E+06	2.23E+06	SOWM
Rb	2.67E+05	1.21E+06	1.21E+06	SOWM
Rh	1.44E+05	8.26E+05	8.26E+05	SOWM
Ru	9.51E+05	2.23E+06	2.23E+06	SOWM
Sb	1.18E+04	5.34E+06	5.34E+06	SOWM
Se	3.92E+04	3.31E+06	3.31E+06	SOWM
Si	1.02E+07	1.21E+08	1.21E+08	SOWM
SO4	8.43E+06		8.43E+06	Actual
Sr	2.57E+05	3.31E+06	3.31E+06	SOWM
Ta	2.49E+03	1.91E+05	1.91E+05	SOWM
Te	1.80E+05	8.26E+05	8.26E+05	SOWM
Th	5.10E+07	3.18E+07	3.18E+07	SOWM

CALCULATION SHEET

PROJECT: RPP-WTP
JOB NO.: 24590
CALC NO.: 24590-WTP-M4C-FRP-00001
SHEET REV: 0A
SHEET NO.: 50

BY: E. Berríos
DATE: 12/04/02

SUBJECT: Updated Emissions Run Feed Vector

Analyte	Actual (g)	SOW max (g)	Selected (g)	Source
Ti	1.24E+05	8.26E+06	8.26E+06	SOWM
TIC as CO3	8.09E+07	1.91E+08	1.91E+08	SOWM
Tl	9.74E+04	2.86E+06	2.86E+06	SOWM
U(total)	3.53E+07	8.90E+07	8.90E+07	SOWM
V	2.98E+04	2.03E+05	2.03E+05	SOWM
W	9.60E+05	1.53E+06	1.53E+06	SOWM
Y	9.81E+04	1.02E+06	1.02E+06	SOWM
Zn	6.08E+05	2.67E+06	2.67E+06	SOWM
Zr	6.49E+07	9.54E+07	9.54E+07	SOWM

SOWM = statement of work maximum

CALCULATION SHEET

PROJECT: RPP-WTP
JOB NO.: 24590
CALC NO.: 24590-WTP-M4C-FRP-00001
SHEET REV: 0A
SHEET NO.: 51

BY: E. Berrios
DATE: 12/04/02

SUBJECT: Updated Emissions Run Feed Vector

Table B-6 Radionuclides Feed Quantity Comparison

Analyte	Ci	SOW Max Ci/100 g w. ox	Feed Quantity Ci	Actual Feed Ci	Selected Ci	Source
106Ru	6.21E+02			6.21E+02	6.21E+02	Actual
113mCd	1.93E+03			1.93E+03	1.93E+03	Actual
125Sb	6.18E+03	3.20E-02	2.03E+05	6.18E+03	2.03E+05	SOWM
126Sn	6.37E+01	1.50E-04	9.54E+02	6.37E+01	9.54E+02	SOWM
129I	1.40E+00	2.90E-07	1.84E+00	1.40E+00	1.84E+00	SOWM
134Cs	4.47E+02			4.47E+02	4.47E+02	Actual
137Cs	4.92E+05	1.5	9.54E+06	4.92E+05	9.54E+06	SOWM
137mBa	4.66E+05			4.66E+05	4.66E+05	Actual
14C	3.80E+00	6.50E-06	4.13E+01	3.80E+00	4.13E+01	SOWM
151Sm	6.36E+05			6.36E+05	6.36E+05	Actual
152Eu	1.31E+02	4.80E-04	3.05E+03	1.31E+02	3.05E+03	SOWM
154Eu	1.35E+04	5.20E-02	3.31E+05	1.35E+04	3.31E+05	SOWM
155Eu	1.74E+04	2.90E-02	1.84E+05	1.74E+04	1.84E+05	SOWM
226Ra	2.16E-02			2.16E-02	2.16E-02	Actual
227Ac	1.09E+02			1.09E+02	1.09E+02	Actual
228Ra	2.25E+01			2.25E+01	2.25E+01	Actual
229Th	9.41E-01			9.41E-01	9.41E-01	Actual
231Pa	2.40E+02			2.40E+02	2.40E+02	Actual
232Th	4.99E+00			4.99E+00	4.99E+00	Actual
232U	1.93E+01			1.93E+01	1.93E+01	Actual
233U	4.13E+02	9.00E-07	5.72E+00	4.13E+02	5.72E+00	SOWM
234U	2.08E+01			2.08E+01	2.08E+01	Actual
235U	6.03E-01	2.50E-07	1.59E+00	6.03E-01	1.59E+00	SOWM
236U	6.48E-01			6.48E-01	6.48E-01	Actual
237Np	1.34E+01	7.40E-05	4.70E+02	1.34E+01	4.70E+02	SOWM
238Pu	5.55E+02	3.50E-04	2.23E+03	5.55E+02	2.23E+03	SOWM
238U	1.17E+01			1.17E+01	1.17E+01	Actual
239Pu	5.47E+03	3.10E-03	1.97E+04	5.47E+03	1.97E+04	SOWM
240Pu	1.08E+03			1.08E+03	1.08E+03	Actual
241Am	2.55E+04	9.00E-02	5.72E+05	2.55E+04	5.72E+05	SOWM
241Pu	1.48E+04	2.20E-02	1.40E+05	1.48E+04	1.40E+05	SOWM
242Cm	2.30E+01			2.30E+01	2.30E+01	Actual
242Pu	2.05E-01			2.05E-01	2.05E-01	Actual
243Am	5.61E+00			5.61E+00	5.61E+00	Actual
243Cm*	3.36E+00	3.00E-03	1.91E+04	3.36E+00	1.91E+04	SOWM
244Cm*	7.53E+01	3.00E-03	1.91E+04	7.53E+01	1.91E+04	SOWM
3H	5.61E+01	6.50E-05	4.13E+02	5.61E+01	4.13E+02	SOWM
59Ni	3.22E+02			3.22E+02	3.22E+02	Actual
60Co	1.09E+03	1.00E-02	6.36E+04	1.09E+03	6.36E+04	SOWM
63Ni	3.01E+04			3.01E+04	3.01E+04	Actual
79Se	1.79E+01			1.79E+01	1.79E+01	Actual
90Sr	5.27E+06	1.00E+01	6.36E+07	5.27E+06	6.36E+07	SOWM
90Y	5.27E+06			5.27E+06	5.27E+06	Actual
93mNb	6.98E+02			6.98E+02	6.98E+02	Actual
93Zr	7.75E+02			7.75E+02	7.75E+02	Actual
99Tc	1.27E+02	1.50E-02	9.54E+04	1.27E+02	9.54E+04	SOWM

Table B-7 HLW Chemical Analytes Charge Balance

Analyte	mol	Charge	Total charge
Ag	3.24E+04	1	3.24E+04
Al	3.30E+06	3	9.89E+06
As	1.36E+04	5	6.79E+04
B	7.65E+05	3	2.29E+06
Ba	2.08E+05	2	4.17E+05
Be	4.59E+04	0	0.00E+00
Bi	8.52E+04	3	2.56E+05
Ca	1.13E+06	2	2.25E+06
Cd	2.55E+05	2	5.09E+05
Ce	3.68E+04	3	1.10E+05
Cl	5.91E+04	-1	-5.91E+04
CN	3.91E+05	0	0.00E+00
Co	4.86E+04	0	0.00E+00
Cr	8.31E+04	3	2.49E+05
Cu	4.81E+04	2	9.61E+04
F	1.17E+06	-1	-1.17E+06
Fe	3.30E+06	3	9.91E+06
Hg	3.17E+03	2	6.34E+03
K	2.11E+05	1	2.11E+05
La	1.19E+05	3	3.57E+05
Li	1.29E+05	1	1.29E+05
Mg	5.49E+05	2	1.10E+06
Mn	7.53E+05	4	3.01E+06
Mo	4.31E+04	0	0.00E+00
Na	5.25E+06	1	5.25E+06
Nd	7.50E+04	0	0.00E+00
NH3	5.98E+05	0	0.00E+00
Ni	2.60E+05	2	5.20E+05
NO2	7.96E+05	-1	-7.96E+05
NO3	3.69E+06	-1	-3.69E+06
OH	1.35E+07	-1	-1.35E+07
Oxalate	7.95E+05	-2	-1.59E+06
Pb	3.38E+04	2	6.75E+04
Pd	7.77E+03	2	1.55E+04
PO4	6.19E+05	-3	-1.86E+06
Pr	1.58E+04	0	0.00E+00
Rb	1.41E+04	0	0.00E+00
Rh	8.03E+03	0	0.00E+00
Ru	2.20E+04	0	0.00E+00
Sb	4.38E+04	0	0.00E+00
Se	4.18E+04	0	0.00E+00
Si	4.30E+06	4	1.72E+07
SO4	8.77E+04	-2	-1.75E+05
Sr	3.77E+04	2	7.55E+04
Ta	1.05E+03	0	0.00E+00
Te	6.48E+03	0	0.00E+00
Th	1.37E+05	0	0.00E+00
Ti	1.73E+05	4	6.90E+05

CALCULATION SHEET

PROJECT: RPP-WTP
JOB NO.: 24590
CALC NO.: 24590-WTP-M4C-FRP-00001
SHEET REV: 0A
SHEET NO.: 53

BY: E. Berrios
DATE: 12/04/02

SUBJECT: Updated Emissions Run Feed Vector

Analyte	mol	Charge	Total charge
TIC as CO3	3.18E+06	-2	-6.36E+06
Tl	1.40E+04	0	0.00E+00
U(total)	3.74E+05	0	0.00E+00
V	4.00E+03	0	0.00E+00
W	8.30E+03	0	0.00E+00
Y	1.14E+04	0	0.00E+00
Zn	4.08E+04	2	8.17E+04
Zr	1.05E+06	4	4.18E+06
Total charge			29810608

CALCULATION SHEET

PROJECT: RPP-WTP
JOB NO.: 24590
CALC NO.: 24590-WTP-M4C-FRP-00001
SHEET REV: 0A
SHEET NO.: 54

BY: E. Berrios
DATE: 12/04/02

SUBJECT: Updated Emissions Run Feed Vector

Table B-8 HLW Radionuclides Charge Balance

Analyte	Ci	Charge	Ci/kmol	mol	Total Charge
106Ru	6.21E+02				
113mCd	1.93E+03				
125Sb	2.03E+05	3	1.30E+08	1.56E+00	4.69E+00
126Sn	9.54E+02	2	1.43E+03	6.67E+02	1.33E+03
129I	1.84E+00	-1	2.28E+01	8.09E+01	-8.09E+01
134Cs	4.47E+02				
137Cs	9.54E+06	1	1.19E+07	8.01E+02	8.01E+02
137mBa	4.66E+05				
14C	4.13E+01	4	6.26E+04	6.60E-01	2.64E+00
151Sm	6.36E+05	3	3.97E+06	1.60E+02	4.81E+02
152Eu	3.05E+03	3	2.64E+07	1.16E-01	3.47E-01
154Eu	3.31E+05	3	4.16E+07	7.95E+00	2.38E+01
155Eu	1.84E+05	3	7.53E+07	2.45E+00	7.35E+00
226Ra	2.16E-02				
227Ac	1.09E+02				
228Ra	2.25E+01				
229Th	9.41E-01				
231Pa	2.40E+02				
232Th	4.99E+00	4	2.55E-02	1.96E+05	7.83E+05
232U	1.93E+01				
233U	5.72E+00	6	2.25E+03	2.54E+00	1.53E+01
234U	2.08E+01	6	1.45E+03	1.43E+01	8.61E+01
235U	1.59E+00	6	5.08E-01	3.13E+03	1.88E+04
236U	6.48E-01	6	1.52E+01	4.26E+01	2.56E+02
237Np	4.70E+02	4	1.67E+02	2.82E+03	1.13E+04
238Pu	2.23E+03	4	4.08E+06	5.45E-01	2.18E+00
238U	1.17E+01	6	8.00E-02	1.46E+05	8.78E+05
239Pu	1.97E+04	4	1.48E+04	1.33E+03	5.33E+03
240Pu	1.08E+03	4	5.45E+04	1.98E+01	7.93E+01
241Am	5.72E+05	3	8.26E+05	6.93E+02	2.08E+03
241Pu	1.40E+05	4	2.48E+07	5.64E+00	2.26E+01
242Cm	2.30E+01				
242Pu	2.05E-01				
243Am	5.61E+00				
243Cm	1.91E+04	3	1.23E+07	1.55E+00	4.65E+00
244Cm	1.91E+04	3	2.62E+07	7.28E-01	2.18E+00
3H	4.13E+02	1	2.90E+07	1.42E-02	1.42E-02
59Ni	3.22E+02				
60Co	6.36E+04	3	6.78E+07	9.38E-01	2.81E+00
63Ni	3.01E+04	2	3.57E+06	8.43E+00	1.69E+01
79Se	1.79E+01				
90Sr	6.36E+07	2	1.24E+07	5.13E+03	1.03E+04
90Y	5.27E+06				
93mNb	6.98E+02				
93Zr	7.75E+02				
99Tc	9.54E+04	7	1.68E+03	5.68E+04	3.97E+05
Total overall charge for radionuclides					2108359

CALCULATION SHEET

PROJECT: RPP-WTP
JOB NO.: 24590
CALC NO.: 24590-WTP-M4C-FRP-00001
SHEET REV: 0A
SHEET NO.: 55

BY: E. Berríos
DATE: 12/04/02

SUBJECT: Updated Emissions Run Feed Vector

Table B-9 HLW Chemical Analytes Emissions Feed

Analyte	mol	mol/mol Na	Analyte	mol	mol/mol Na
Ag	3.24E+04	6.17E-03	NO2	7.96E+05	1.51E-01
Al	3.30E+06	6.28E-01	NO3	3.69E+06	7.03E-01
As	1.36E+04	2.59E-03	OH	4.54E+07	8.64E+00
B	7.65E+05	1.46E-01	Oxalate	7.95E+05	1.51E-01
Ba	2.08E+05	3.97E-02	Pb	3.38E+04	6.43E-03
Be	4.59E+04	8.74E-03	Pd	7.77E+03	1.48E-03
Bi	8.52E+04	1.62E-02	PO4	6.19E+05	1.18E-01
Ca	1.13E+06	2.14E-01	Pr	1.58E+04	3.01E-03
Cd	2.55E+05	4.85E-02	Rb	1.41E+04	2.69E-03
Ce	3.68E+04	7.00E-03	Rh	8.03E+03	1.53E-03
Cl	5.91E+04	1.13E-02	Ru	2.20E+04	4.19E-03
CN	3.91E+05	7.45E-02	Sb	4.38E+04	8.35E-03
Co	4.86E+04	9.25E-03	Se	4.18E+04	7.97E-03
Cr	8.31E+04	1.58E-02	Si	4.30E+06	8.19E-01
Cu	4.81E+04	9.15E-03	SO4	8.77E+04	1.67E-02
F	1.17E+06	2.23E-01	Sr	3.77E+04	7.19E-03
Fe	3.30E+06	6.29E-01	Ta	1.05E+03	2.01E-04
Hg	3.17E+03	6.03E-04	Te	6.48E+03	1.23E-03
K	2.11E+05	4.02E-02	Th	1.37E+05	2.61E-02
La	1.19E+05	2.27E-02	Ti	1.73E+05	3.29E-02
Li	1.29E+05	2.46E-02	TIC as CO3	3.18E+06	6.05E-01
Mg	5.49E+05	1.05E-01	Tl	1.40E+04	2.67E-03
Mn	7.53E+05	1.43E-01	U(total)	3.74E+05	7.12E-02
Mo	4.31E+04	8.20E-03	V	4.00E+03	7.61E-04
Na	5.25E+06	1.00E+00	W	8.30E+03	1.58E-03
Nd	7.50E+04	1.43E-02	Y	1.14E+04	2.18E-03
NH3	5.98E+05	1.14E-01	Zn	4.08E+04	7.77E-03
Ni	2.60E+05	4.95E-02	Zr	1.05E+06	1.99E-01

Table B-10 HLW Radionuclide Emissions Feed

Analyte	Ci	Bq/mol Na	Analyte	Ci	Bq/mol Na
106Ru	6.21E+02	4.37E+06	236U	6.48E-01	4.57E+03
113mCd	1.93E+03	1.36E+07	237Np	4.70E+02	3.31E+06
125Sb	2.03E+05	1.43E+09	238Pu	2.23E+03	1.57E+07
126Sn	9.54E+02	6.72E+06	238U	1.17E+01	8.24E+04
129I	1.84E+00	1.30E+04	239Pu	1.97E+04	1.39E+08
134Cs	4.47E+02	3.15E+06	240Pu	1.08E+03	7.61E+06
137Cs	9.54E+06	6.72E+10	241Am	5.72E+05	4.03E+09
137mBa	4.66E+05	3.28E+09	241Pu	1.40E+05	9.85E+08
14C	4.13E+01	2.91E+05	242Cm	2.30E+01	1.62E+05
151Sm	6.36E+05	4.48E+09	242Pu	2.05E-01	1.44E+03
152Eu	3.05E+03	2.15E+07	243Am	5.61E+00	3.95E+04
154Eu	3.31E+05	2.33E+09	243Cm	1.91E+04	1.34E+08
155Eu	1.84E+05	1.30E+09	244Cm	1.91E+04	1.34E+08
226Ra	2.16E-02	1.52E+02	3H	4.13E+02	2.91E+06
227Ac	1.09E+02	7.68E+05	59Ni	3.22E+02	2.27E+06
228Ra	2.25E+01	1.59E+05	60Co	6.36E+04	4.48E+08
229Th	9.41E-01	6.63E+03	63Ni	3.01E+04	2.12E+08
231Pa	2.40E+02	1.69E+06	79Se	1.79E+01	1.26E+05
232Th	4.99E+00	3.52E+04	90Sr	6.36E+07	4.48E+11
232U	1.93E+01	1.36E+05	90Y	5.27E+06	3.71E+10
233U	5.72E+00	4.03E+04	93mNb	6.98E+02	4.92E+06
234U	2.08E+01	1.47E+05	93Zr	7.75E+02	5.46E+06
235U	1.59E+00	1.12E+04	99Tc	9.54E+04	6.72E+08

Appendix C LAW BBI Data

CALCULATION SHEET

PROJECT: RPP-WTP
JOB NO.: 24590
CALC NO : 24590-WTP-M4C-FRP-00001
SHEET REV: 0A
SHEET NO.: 58

BY. E. Berrios
DATE. 12/04/02

SUBJECT: Updated Emissions Run Feed Vector

Tank Name	Analyte	Waste Phase	Inventory	Inventory Units	Basis	Density	Density Units	Volume	Volume Units	Concentration	Concentration Units	Decay Date
241-AN-102	106Ru	Supernatant	1.73E-04	Ci	TE	1.6	g/mL	3571	kL	3.21E-08	uCi/g	Jan 1 2001 12:00AM
241-AN-102	113mCd	Supernatant	1.57E+02	Ci	TE	1.6	g/mL	3571	kL	2.92E-02	uCi/g	Jan 1 2001 12:00AM
241-AN-102	125Sb	Supernatant	8.65E+01	Ci	TE	1.6	g/mL	3571	kL	1.60E-02	uCi/g	Jan 1 2001 12:00AM
241-AN-102	126Sn	Supernatant	4.87E+00	Ci	TE	1.6	g/mL	3571	kL	9.02E-04	uCi/g	Jan 1 2001 12:00AM
241-AN-102	129I	Supernatant	4.60E-01	Ci	S	1.43	g/mL	3571	kL	9.09E-05	uCi/g	Jan 1 2001 12:00AM
241-AN-102	134Cs	Supernatant	2.17E+00	Ci	TE	1.6	g/mL	3571	kL	4.03E-04	uCi/g	Jan 1 2001 12:00AM
241-AN-102	137Cs	Supernatant	1.46E+06	Ci	S	1.46	g/mL	3571	kL	2.83E+02	uCi/g	Jan 1 2001 12:00AM
241-AN-102	137mBa	Supernatant	1.38E+06	Ci	C		g/mL	3571	kL		uCi/g	Jan 1 2001 12:00AM
241-AN-102	14C	Supernatant	2.49E+00	Ci	S	1.43	g/mL	3571	kL	4.92E-04	uCi/g	Jan 1 2001 12:00AM
241-AN-102	151Sm	Supernatant	2.68E+04	Ci	TE	1.6	g/mL	3571	kL	4.97E+00	uCi/g	Jan 1 2001 12:00AM
241-AN-102	152Eu	Supernatant	8.09E+00	Ci	TE	1.6	g/mL	3571	kL	1.50E-03	uCi/g	Jan 1 2001 12:00AM
241-AN-102	154Eu	Supernatant	7.97E+02	Ci	S	1.43	g/mL	3571	kL	1.58E-01	uCi/g	Jan 1 2001 12:00AM
241-AN-102	155Eu	Supernatant	4.08E+02	Ci	S	1.43	g/mL	3571	kL	8.08E-02	uCi/g	Jan 1 2001 12:00AM
241-AN-102	226Ra	Supernatant	3.23E-04	Ci	TE	1.6	g/mL	3571	kL	5.99E-08	uCi/g	Jan 1 2001 12:00AM
241-AN-102	227Ac	Supernatant	3.30E-03	Ci	TE	1.6	g/mL	3571	kL	6.12E-07	uCi/g	Jan 1 2001 12:00AM
241-AN-102	228Ra	Supernatant	3.45E-01	Ci	TE	1.6	g/mL	3571	kL	6.40E-05	uCi/g	Jan 1 2001 12:00AM
241-AN-102	229Th	Supernatant	1.65E-02	Ci	TE	1.6	g/mL	3571	kL	3.06E-06	uCi/g	Jan 1 2001 12:00AM
241-AN-102	231Pa	Supernatant	8.90E-03	Ci	TE	1.6	g/mL	3571	kL	1.65E-06	uCi/g	Jan 1 2001 12:00AM
241-AN-102	232Th	Supernatant	7.88E-04	Ci	S	1.43	g/mL	3571	kL	1.56E-07	uCi/g	Jan 1 2001 12:00AM
241-AN-102	232U	Supernatant	3.29E-02	Ci	C	1.46	g/mL	3571	kL	6.39E-06	uCi/g	Jan 1 2001 12:00AM
241-AN-102	233U	Supernatant	1.35E-01	Ci	C	1.46	g/mL	3571	kL	2.62E-05	uCi/g	Jan 1 2001 12:00AM
241-AN-102	234U	Supernatant	2.78E-02	Ci	C	1.46	g/mL	3571	kL	5.40E-06	uCi/g	Jan 1 2001 12:00AM
241-AN-102	235U	Supernatant	1.11E-03	Ci	C	1.46	g/mL	3571	kL	2.15E-07	uCi/g	Jan 1 2001 12:00AM
241-AN-102	236U	Supernatant	9.90E-04	Ci	C	1.46	g/mL	3571	kL	1.92E-07	uCi/g	Jan 1 2001 12:00AM
241-AN-102	237Np	Supernatant	5.56E+00	Ci	TE	1.6	g/mL	3571	kL	1.03E-03	uCi/g	Jan 1 2001 12:00AM
241-AN-102	238Pu	Supernatant	5.43E-01	Ci	C	1.41	g/mL	3571	kL	1.08E-04	uCi/g	Jan 1 2001 12:00AM
241-AN-102	238U	Supernatant	2.46E-02	Ci	C	1.46	g/mL	3571	kL	4.77E-06	uCi/g	Jan 1 2001 12:00AM
241-AN-102	239Pu	Supernatant	1.77E+01	Ci	C	1.41	g/mL	3571	kL	3.51E-03	uCi/g	Jan 1 2001 12:00AM
241-AN-102	240Pu	Supernatant	3.12E+00	Ci	C	1.41	g/mL	3571	kL	6.18E-04	uCi/g	Jan 1 2001 12:00AM
241-AN-102	241Am	Supernatant	5.68E+02	Ci	S	1.43	g/mL	3571	kL	1.12E-01	uCi/g	Jan 1 2001 12:00AM
241-AN-102	241Pu	Supernatant	2.94E+01	Ci	C	1.41	g/mL	3571	kL	5.83E-03	uCi/g	Jan 1 2001 12:00AM
241-AN-102	242Cm	Supernatant	1.52E+00	Ci	C	1.43	g/mL	3571	kL	3.01E-04	uCi/g	Jan 1 2001 12:00AM
241-AN-102	242Pu	Supernatant	2.20E-04	Ci	C	1.41	g/mL	3571	kL	4.35E-08	uCi/g	Jan 1 2001 12:00AM
241-AN-102	243Am	Supernatant	2.23E-02	Ci	C	1.43	g/mL	3571	kL	4.40E-06	uCi/g	Jan 1 2001 12:00AM
241-AN-102	243Cm	Supernatant	1.27E-01	Ci	C	1.43	g/mL	3571	kL	2.50E-05	uCi/g	Jan 1 2001 12:00AM
241-AN-102	244Cm	Supernatant	9.94E-01	Ci	C	1.43	g/mL	3571	kL	1.97E-04	uCi/g	Jan 1 2001 12:00AM
241-AN-102	3H	Supernatant	2.26E+00	Ci	S	1.43	g/mL	3571	kL	4.47E-04	uCi/g	Jan 1 2001 12:00AM
241-AN-102	59Ni	Supernatant	1.74E+00	Ci	TE	1.6	g/mL	3571	kL	3.23E-04	uCi/g	Jan 1 2001 12:00AM
241-AN-102	60Co	Supernatant	2.73E+02	Ci	S	1.43	g/mL	3571	kL	5.39E-02	uCi/g	Jan 1 2001 12:00AM
241-AN-102	63Ni	Supernatant	1.64E+02	Ci	TE	1.6	g/mL	3571	kL	3.05E-02	uCi/g	Jan 1 2001 12:00AM
241-AN-102	79Se	Supernatant	2.14E+00	Ci	S	1.43	g/mL	3571	kL	4.22E-04	uCi/g	Jan 1 2001 12:00AM
241-AN-102	90Sr	Supernatant	2.97E+05	Ci	S	1.46	g/mL	3571	kL	5.75E+01	uCi/g	Jan 1 2001 12:00AM
241-AN-102	90Y	Supernatant	2.97E+05	Ci	C		g/mL	3571	kL		uCi/g	Jan 1 2001 12:00AM
241-AN-102	93mNb	Supernatant	3.19E+01	Ci	TE	1.6	g/mL	3571	kL	5.92E-03	uCi/g	Jan 1 2001 12:00AM
241-AN-102	93Zr	Supernatant	3.98E+01	Ci	TE	1.6	g/mL	3571	kL	7.37E-03	uCi/g	Jan 1 2001 12:00AM
241-AN-102	99Tc	Supernatant	4.95E+02	Ci	S	1.43	g/mL	3571	kL	9.79E-02	uCi/g	Jan 1 2001 12:00AM

CALCULATION SHEET

PROJECT: RPP-WTP
JOB NO.: 24590
CALC NO.: 24590-WTP-M4C-FRP-00001
SHEET REV: 0A
SHEET NO.: 59

BY: E. Berrios
DATE: 12/04/02

SUBJECT: Updated Emissions Run Feed Vector

Tank Name	Analyte	Waste Phase	Inventory	Inventory Units	Basis	Density	Density Units	Volume	Volume Units	Concentration	Concentration Units	Decay Date
241-AN-102	Ag	Supernatant	2.09E+01	kg	S	1.42	g/mL	3571	kL	4.23E+00	ug/g	Jan 1 2001 12:00AM
241-AN-102	Al	Supernatant	4.80E+04	kg	S	1.46	g/mL	3571	kL	9.20E+03	ug/g	Jan 1 2001 12:00AM
241-AN-102	Ba	Supernatant	1.05E+02	kg	S	1.42	g/mL	3571	kL	2.12E+01	ug/g	Jan 1 2001 12:00AM
241-AN-102	Be	Supernatant	1.06E+01	kg	S	1.46	g/mL	3571	kL	2.05E+00	ug/g	Jan 1 2001 12:00AM
241-AN-102	Bi	Supernatant	1.69E+02	kg	TE	1.6	g/mL	3571	kL	3.13E+01	ug/g	Jan 1 2001 12:00AM
241-AN-102	Ca	Supernatant	1.60E+03	kg	S	1.46	g/mL	3571	kL	3.08E+02	ug/g	Jan 1 2001 12:00AM
241-AN-102	Cd	Supernatant	2.08E+02	kg	S	1.46	g/mL	3571	kL	4.00E+01	ug/g	Jan 1 2001 12:00AM
241-AN-102	Cl	Supernatant	1.17E+04	kg	S	1.46	g/mL	3571	kL	2.24E+03	ug/g	Jan 1 2001 12:00AM
241-AN-102	Cr	Supernatant	8.64E+02	kg	S	1.46	g/mL	3571	kL	1.66E+02	ug/g	Jan 1 2001 12:00AM
241-AN-102	Cu	Supernatant	8.31E+01	kg	S	1.46	g/mL	3571	kL	1.59E+01	ug/g	Jan 1 2001 12:00AM
241-AN-102	F	Supernatant	2.18E+03	kg	S	1.46	g/mL	3571	kL	4.18E+02	ug/g	Jan 1 2001 12:00AM
241-AN-102	Fe	Supernatant	1.43E+02	kg	S	1.46	g/mL	3571	kL	2.74E+01	ug/g	Jan 1 2001 12:00AM
241-AN-102	Hg	Supernatant	0.00E+00	kg	TE	1.6	g/mL	3571	kL	0.00E+00	ug/g	Jan 1 2001 12:00AM
241-AN-102	K	Supernatant	7.77E+03	kg	S	1.46	g/mL	3571	kL	1.49E+03	ug/g	Jan 1 2001 12:00AM
241-AN-102	La	Supernatant	5.93E+00	kg	TE	1.6	g/mL	3571	kL	1.10E+00	ug/g	Jan 1 2001 12:00AM
241-AN-102	Li	Supernatant	2.09E+01	kg	S	1.42	g/mL	3571	kL	4.23E+00	ug/g	Jan 1 2001 12:00AM
241-AN-102	Mg	Supernatant	1.14E+02	kg	S	1.46	g/mL	3571	kL	2.18E+01	ug/g	Jan 1 2001 12:00AM
241-AN-102	Mn	Supernatant	7.06E+01	kg	S	1.46	g/mL	3571	kL	1.35E+01	ug/g	Jan 1 2001 12:00AM
241-AN-102	Mo	Supernatant	1.73E+02	kg	S	1.46	g/mL	3571	kL	3.32E+01	ug/g	Jan 1 2001 12:00AM
241-AN-102	Na	Supernatant	7.94E+05	kg	S	1.46	g/mL	3571	kL	1.52E+05	ug/g	Jan 1 2001 12:00AM
241-AN-102	Nd	Supernatant	2.09E+02	kg	S	1.42	g/mL	3571	kL	4.23E+01	ug/g	Jan 1 2001 12:00AM
241-AN-102	Ni	Supernatant	1.38E+03	kg	S	1.46	g/mL	3571	kL	2.64E+02	ug/g	Jan 1 2001 12:00AM
241-AN-102	NO2	Supernatant	2.91E+05	kg	S	1.46	g/mL	3571	kL	5.59E+04	ug/g	Jan 1 2001 12:00AM
241-AN-102	NO3	Supernatant	7.28E+05	kg	S	1.46	g/mL	3571	kL	1.40E+05	ug/g	Jan 1 2001 12:00AM
241-AN-102	OH	Supernatant	3.74E+04	kg	S	1.46	g/mL	3571	kL	7.17E+03	ug/g	Jan 1 2001 12:00AM
241-AN-102	Pb	Supernatant	5.45E+02	kg	S	1.46	g/mL	3571	kL	1.04E+02	ug/g	Jan 1 2001 12:00AM
241-AN-102	PO4	Supernatant	1.79E+04	kg	S	1.46	g/mL	3571	kL	3.43E+03	ug/g	Jan 1 2001 12:00AM
241-AN-102	Si	Supernatant	7.24E+01	kg	S	1.41	g/mL	3571	kL	1.43E+01	ug/g	Jan 1 2001 12:00AM
241-AN-102	SO4	Supernatant	5.46E+04	kg	S	1.46	g/mL	3571	kL	1.05E+04	ug/g	Jan 1 2001 12:00AM
241-AN-102	Sr	Supernatant	7.25E+00	kg	C		g/mL	3571	kL		ug/g	Jan 1 2001 12:00AM
241-AN-102	Ti	Supernatant	2.09E+01	kg	S	1.42	g/mL	3571	kL	4.23E+00	ug/g	Jan 1 2001 12:00AM
241-AN-102	TIC as CO3	Supernatant	2.65E+05	kg	S	1.46	g/mL	3571	kL	5.08E+04	ug/g	Jan 1 2001 12:00AM
241-AN-102	UTOTAL	Supernatant	7.36E+01	kg	S	1.46	g/mL	3571	kL	1.43E+01	ug/g	Jan 1 2001 12:00AM
241-AN-102	V	Supernatant	1.05E+02	kg	S	1.42	g/mL	3571	kL	2.12E+01	ug/g	Jan 1 2001 12:00AM
241-AN-102	Zn	Supernatant	2.09E+01	kg	S	1.42	g/mL	3571	kL	4.23E+00	ug/g	Jan 1 2001 12:00AM
241-AN-102	Zr	Supernatant	3.28E+01	kg	S	1.46	g/mL	3571	kL	6.37E+00	ug/g	Jan 1 2001 12:00AM
241-AN-103	106Ru	Salt Cake	1.40E-04	Ci	TS	1.58	g/mL	1533	kL	4.97E-08	uCi/g	Jan 1 2001 12:00AM
241-AN-103	106Ru	Supernatant	8.08E-05	Ci	TE	1.6	g/mL	1883	kL	3.21E-08	uCi/g	Jan 1 2001 12:00AM
241-AN-103	113mCd	Salt Cake	1.27E+02	Ci	TS	1.58	g/mL	1533	kL	4.52E-02	uCi/g	Jan 1 2001 12:00AM
241-AN-103	113mCd	Supernatant	7.34E+01	Ci	TE	1.6	g/mL	1883	kL	2.92E-02	uCi/g	Jan 1 2001 12:00AM
241-AN-103	125Sb	Salt Cake	6.97E+01	Ci	TS	1.58	g/mL	1533	kL	2.48E-02	uCi/g	Jan 1 2001 12:00AM
241-AN-103	125Sb	Supernatant	4.04E+01	Ci	TE	1.6	g/mL	1883	kL	1.60E-02	uCi/g	Jan 1 2001 12:00AM
241-AN-103	126Sn	Salt Cake	3.92E+00	Ci	TS	1.58	g/mL	1533	kL	1.40E-03	uCi/g	Jan 1 2001 12:00AM
241-AN-103	126Sn	Supernatant	1.42E+01	Ci	S	1.49	g/mL	1883	kL	5.93E-03	uCi/g	Jan 1 2001 12:00AM
241-AN-103	129I	Salt Cake	3.15E-01	Ci	TS	1.58	g/mL	1533	kL	1.12E-04	uCi/g	Jan 1 2001 12:00AM
241-AN-103	129I	Supernatant	6.09E-01	Ci	S	1.49	g/mL	1883	kL	2.54E-04	uCi/g	Jan 1 2001 12:00AM
241-AN-103	134Cs	Salt Cake	3.04E-01	Ci	TS	1.58	g/mL	1533	kL	1.08E-04	uCi/g	Jan 1 2001 12:00AM

CALCULATION SHEET

PROJECT: RPP-WTP
JOB NO.: 24590
CALC NO.: 24590-WTP-M4C-FRP-00001
SHEET REV: 0A
SHEET NO.: 60

BY: E. Barrios
DATE: 12/04/02

SUBJECT: Updated Emissions Run Feed Vectis

Tank Name	Analyte	Waste Phase	Inventory	Inventory Units	Basis	Density	Density Units	Volume	Volume Units	Concentration	Concentration Units	Decay Date
241-AN-103	134Cs	Supernatant	1.01E+00	Ci	TE	1.6	g/mL	1883	kL	4.03E-04	uCi/g	Jan 1 2001 12:00AM
241-AN-103	137Cs	Salt Cake	6.79E+05	Ci	S	1.69	g/mL	1533	kL	2.24E+02	uCi/g	Jan 1 2001 12:00AM
241-AN-103	137Cs	Supernatant	1.22E+06	Ci	S	1.49	g/mL	1883	kL	5.12E+02	uCi/g	Jan 1 2001 12:00AM
241-AN-103	137mBa	Salt Cake	6.42E+05	Ci	C		g/mL	1533	kL		uCi/g	Jan 1 2001 12:00AM
241-AN-103	137mBa	Supernatant	1.16E+06	Ci	C		g/mL	1883	kL		uCi/g	Jan 1 2001 12:00AM
241-AN-103	14C	Salt Cake	5.28E+01	Ci	TS	1.58	g/mL	1533	kL	1.88E-02	uCi/g	Jan 1 2001 12:00AM
241-AN-103	14C	Supernatant	5.57E-01	Ci	S	1.49	g/mL	1883	kL	2.33E-04	uCi/g	Jan 1 2001 12:00AM
241-AN-103	151Sm	Salt Cake	2.16E+04	Ci	TS	1.58	g/mL	1533	kL	7.69E+00	uCi/g	Jan 1 2001 12:00AM
241-AN-103	151Sm	Supernatant	1.25E+04	Ci	TE	1.6	g/mL	1883	kL	4.97E+00	uCi/g	Jan 1 2001 12:00AM
241-AN-103	152Eu	Salt Cake	6.53E+00	Ci	TS	1.58	g/mL	1533	kL	2.32E-03	uCi/g	Jan 1 2001 12:00AM
241-AN-103	152Eu	Supernatant	3.77E+00	Ci	TE	1.6	g/mL	1883	kL	1.50E-03	uCi/g	Jan 1 2001 12:00AM
241-AN-103	154Eu	Salt Cake	1.61E+02	Ci	S	1.69	g/mL	1533	kL	5.30E-02	uCi/g	Jan 1 2001 12:00AM
241-AN-103	154Eu	Supernatant	6.26E+01	Ci	S	1.49	g/mL	1883	kL	2.62E-02	uCi/g	Jan 1 2001 12:00AM
241-AN-103	155Eu	Salt Cake	9.22E+01	Ci	E	1.69	g/mL	1533	kL	3.04E-02	uCi/g	Jan 1 2001 12:00AM
241-AN-103	155Eu	Supernatant	3.48E+01	Ci	E	1.49	g/mL	1883	kL	1.45E-02	uCi/g	Jan 1 2001 12:00AM
241-AN-103	226Ra	Salt Cake	2.61E-04	Ci	TS	1.58	g/mL	1533	kL	9.28E-08	uCi/g	Jan 1 2001 12:00AM
241-AN-103	226Ra	Supernatant	1.51E-04	Ci	TE	1.6	g/mL	1883	kL	5.99E-08	uCi/g	Jan 1 2001 12:00AM
241-AN-103	227Ac	Salt Cake	1.53E-03	Ci	TS	1.58	g/mL	1533	kL	5.46E-07	uCi/g	Jan 1 2001 12:00AM
241-AN-103	227Ac	Supernatant	8.87E-04	Ci	TE	1.6	g/mL	1883	kL	3.52E-07	uCi/g	Jan 1 2001 12:00AM
241-AN-103	228Ra	Supernatant	3.32E-01	Ci	TE	1.6	g/mL	1883	kL	1.32E-04	uCi/g	Jan 1 2001 12:00AM
241-AN-103	228Ra	Salt Cake	5.73E-01	Ci	TS	1.58	g/mL	1533	kL	2.04E-04	uCi/g	Jan 1 2001 12:00AM
241-AN-103	229Th	Salt Cake	1.33E-02	Ci	TS	1.58	g/mL	1533	kL	4.74E-06	uCi/g	Jan 1 2001 12:00AM
241-AN-103	229Th	Supernatant	7.70E-03	Ci	TE	1.6	g/mL	1883	kL	3.06E-06	uCi/g	Jan 1 2001 12:00AM
241-AN-103	231Pa	Salt Cake	7.16E-03	Ci	TS	1.58	g/mL	1533	kL	2.55E-06	uCi/g	Jan 1 2001 12:00AM
241-AN-103	231Pa	Supernatant	4.15E-03	Ci	TE	1.6	g/mL	1883	kL	1.65E-06	uCi/g	Jan 1 2001 12:00AM
241-AN-103	232Th	Salt Cake	7.00E-02	Ci	TS	1.58	g/mL	1533	kL	2.49E-05	uCi/g	Jan 1 2001 12:00AM
241-AN-103	232Th	Supernatant	9.69E-04	Ci	S	1.49	g/mL	1883	kL	4.05E-07	uCi/g	Jan 1 2001 12:00AM
241-AN-103	232U	Salt Cake	4.01E-02	Ci	C	1.69	g/mL	1533	kL	6.02E-04	uCi/g	Jan 1 2001 12:00AM
241-AN-103	232U	Supernatant	8.67E-04	Ci	E	1.49	g/mL	1883	kL	3.62E-07	uCi/g	Jan 1 2001 12:00AM
241-AN-103	233U	Salt Cake	1.65E-01	Ci	C	1.69	g/mL	1533	kL	2.38E-03	uCi/g	Jan 1 2001 12:00AM
241-AN-103	233U	Supernatant	3.55E-03	Ci	E	1.49	g/mL	1883	kL	1.48E-06	uCi/g	Jan 1 2001 12:00AM
241-AN-103	234U	Salt Cake	5.82E-02	Ci	C	1.69	g/mL	1533	kL	8.42E-04	uCi/g	Jan 1 2001 12:00AM
241-AN-103	234U	Supernatant	1.26E-03	Ci	E	1.49	g/mL	1883	kL	5.26E-07	uCi/g	Jan 1 2001 12:00AM
241-AN-103	235U	Salt Cake	2.26E-03	Ci	C	1.69	g/mL	1533	kL	3.27E-05	uCi/g	Jan 1 2001 12:00AM
241-AN-103	235U	Supernatant	4.88E-05	Ci	E	1.49	g/mL	1883	kL	2.04E-08	uCi/g	Jan 1 2001 12:00AM
241-AN-103	236U	Salt Cake	3.40E-03	Ci	C	1.69	g/mL	1533	kL	4.92E-05	uCi/g	Jan 1 2001 12:00AM
241-AN-103	236U	Supernatant	7.34E-05	Ci	E	1.49	g/mL	1883	kL	3.07E-08	uCi/g	Jan 1 2001 12:00AM
241-AN-103	237Np	Salt Cake	5.76E-01	Ci	TS	1.58	g/mL	1533	kL	2.05E-04	uCi/g	Jan 1 2001 12:00AM
241-AN-103	237Np	Supernatant	3.52E-02	Ci	S	1.49	g/mL	1883	kL	1.47E-05	uCi/g	Jan 1 2001 12:00AM
241-AN-103	238Pu	Salt Cake	2.25E-01	Ci	C	1.69	g/mL	1533	kL	2.11E-03	uCi/g	Jan 1 2001 12:00AM
241-AN-103	238Pu	Supernatant	5.03E-02	Ci	E	1.49	g/mL	1883	kL	2.10E-05	uCi/g	Jan 1 2001 12:00AM
241-AN-103	238U	Salt Cake	4.56E-02	Ci	C	1.69	g/mL	1533	kL	6.59E-04	uCi/g	Jan 1 2001 12:00AM
241-AN-103	238U	Supernatant	9.86E-04	Ci	E	1.49	g/mL	1883	kL	4.12E-07	uCi/g	Jan 1 2001 12:00AM
241-AN-103	239Pu	Salt Cake	4.44E+00	Ci	C	1.69	g/mL	1533	kL	4.05E-02	uCi/g	Jan 1 2001 12:00AM
241-AN-103	239Pu	Supernatant	9.93E-01	Ci	E	1.49	g/mL	1883	kL	4.15E-04	uCi/g	Jan 1 2001 12:00AM
241-AN-103	240Pu	Salt Cake	9.24E-01	Ci	C	1.69	g/mL	1533	kL	8.44E-03	uCi/g	Jan 1 2001 12:00AM
241-AN-103	240Pu	Supernatant	2.07E-01	Ci	E	1.49	g/mL	1883	kL	8.66E-05	uCi/g	Jan 1 2001 12:00AM

CALCULATION SHEET

PROJECT: RPP-WTP
JOB NO.: 24590
CALC NO.: 24590-WTP-M4C-FRP-00001
SHEET REV: 0A
SHEET NO.: 61

BY: S. Barnes
DATE: 12/04/02

SUBJECT: Updated Emissions Run Feed Vector

Tank Name	Analyte	Waste Phase	Inventory	Inventory Units	Basis	Density	Density Units	Volume	Volume Units	Concentration	Concentration Units	Decay Date
241-AN-103	241Am	Salt Cake	1.07E+01	Ci	E	1.69	g/mL	1533	kL	3.54E-03	uCi/g	Jan 1 2001 12:00AM
241-AN-103	241Am	Supernatant	9.16E+00	Ci	E	1.49	g/mL	1883	kL	3.83E-03	uCi/g	Jan 1 2001 12:00AM
241-AN-103	241Pu	Salt Cake	1.43E+01	Ci	E	1.69	g/mL	1533	kL	4.72E-03	uCi/g	Jan 1 2001 12:00AM
241-AN-103	241Pu	Supernatant	3.20E+00	Ci	E	1.49	g/mL	1883	kL	1.34E-03	uCi/g	Jan 1 2001 12:00AM
241-AN-103	242Cm	Salt Cake	2.06E-02	Ci	C	1.69	g/mL	1533	kL	1.06E-04	uCi/g	Jan 1 2001 12:00AM
241-AN-103	242Cm	Supernatant	1.77E-02	Ci	E	1.49	g/mL	1883	kL	7.38E-06	uCi/g	Jan 1 2001 12:00AM
241-AN-103	242Pu	Salt Cake	9.41E-05	Ci	C	1.69	g/mL	1533	kL	8.59E-07	uCi/g	Jan 1 2001 12:00AM
241-AN-103	242Pu	Supernatant	2.10E-05	Ci	E	1.49	g/mL	1883	kL	8.79E-09	uCi/g	Jan 1 2001 12:00AM
241-AN-103	243Am	Salt Cake	7.16E-04	Ci	C	1.69	g/mL	1533	kL	3.61E-06	uCi/g	Jan 1 2001 12:00AM
241-AN-103	243Am	Supernatant	6.15E-04	Ci	E	1.49	g/mL	1883	kL	2.57E-07	uCi/g	Jan 1 2001 12:00AM
241-AN-103	243Cm	Salt Cake	1.83E-03	Ci	C	1.69	g/mL	1533	kL	1.01E-05	uCi/g	Jan 1 2001 12:00AM
241-AN-103	243Cm	Supernatant	1.57E-03	Ci	E	1.49	g/mL	1883	kL	6.56E-07	uCi/g	Jan 1 2001 12:00AM
241-AN-103	244Cm	Salt Cake	2.26E-02	Ci	C	1.69	g/mL	1533	kL	1.32E-04	uCi/g	Jan 1 2001 12:00AM
241-AN-103	244Cm	Supernatant	1.94E-02	Ci	E	1.49	g/mL	1883	kL	8.12E-06	uCi/g	Jan 1 2001 12:00AM
241-AN-103	3H	Salt Cake	6.97E+00	Ci	S	1.69	g/mL	1533	kL	2.30E-03	uCi/g	Jan 1 2001 12:00AM
241-AN-103	3H	Supernatant	2.04E+00	Ci	S	1.49	g/mL	1883	kL	8.52E-04	uCi/g	Jan 1 2001 12:00AM
241-AN-103	59Ni	Salt Cake	4.24E+00	Ci	TS	1.58	g/mL	1533	kL	1.51E-03	uCi/g	Jan 1 2001 12:00AM
241-AN-103	59Ni	Supernatant	8.13E-01	Ci	TE	1.6	g/mL	1883	kL	3.23E-04	uCi/g	Jan 1 2001 12:00AM
241-AN-103	60Co	Salt Cake	2.30E+01	Ci	S	1.69	g/mL	1533	kL	7.59E-03	uCi/g	Jan 1 2001 12:00AM
241-AN-103	60Co	Supernatant	1.82E+01	Ci	S	1.49	g/mL	1883	kL	7.58E-03	uCi/g	Jan 1 2001 12:00AM
241-AN-103	63Ni	Salt Cake	4.02E+02	Ci	TS	1.58	g/mL	1533	kL	1.43E-01	uCi/g	Jan 1 2001 12:00AM
241-AN-103	63Ni	Supernatant	7.67E+01	Ci	TE	1.6	g/mL	1883	kL	3.05E-02	uCi/g	Jan 1 2001 12:00AM
241-AN-103	79Se	Salt Cake	6.49E-01	Ci	TS	1.58	g/mL	1533	kL	2.31E-04	uCi/g	Jan 1 2001 12:00AM
241-AN-103	79Se	Supernatant	1.41E+00	Ci	S	1.49	g/mL	1883	kL	5.88E-04	uCi/g	Jan 1 2001 12:00AM
241-AN-103	90Sr	Salt Cake	7.37E+03	Ci	S	1.69	g/mL	1533	kL	2.43E+00	uCi/g	Jan 1 2001 12:00AM
241-AN-103	90Sr	Supernatant	3.06E+01	Ci	S	1.49	g/mL	1883	kL	1.28E-02	uCi/g	Jan 1 2001 12:00AM
241-AN-103	90Y	Salt Cake	7.37E+03	Ci	C		g/mL	1533	kL		uCi/g	Jan 1 2001 12:00AM
241-AN-103	90Y	Supernatant	3.06E+01	Ci	C		g/mL	1883	kL		uCi/g	Jan 1 2001 12:00AM
241-AN-103	93mNb	Salt Cake	2.30E+01	Ci	TS	1.58	g/mL	1533	kL	8.19E-03	uCi/g	Jan 1 2001 12:00AM
241-AN-103	93mNb	Supernatant	1.33E+01	Ci	TE	1.6	g/mL	1883	kL	5.29E-03	uCi/g	Jan 1 2001 12:00AM
241-AN-103	93Zr	Salt Cake	3.20E+01	Ci	TS	1.58	g/mL	1533	kL	1.14E-02	uCi/g	Jan 1 2001 12:00AM
241-AN-103	93Zr	Supernatant	1.86E+01	Ci	TE	1.6	g/mL	1883	kL	7.37E-03	uCi/g	Jan 1 2001 12:00AM
241-AN-103	99Tc	Salt Cake	4.38E+02	Ci	S	1.69	g/mL	1533	kL	1.44E-01	uCi/g	Jan 1 2001 12:00AM
241-AN-103	99Tc	Supernatant	2.55E+02	Ci	S	1.49	g/mL	1883	kL	1.07E-01	uCi/g	Jan 1 2001 12:00AM
241-AN-103	Ag	Salt Cake	4.60E+01	kg	S	1.69	g/mL	1533	kL	3.52E+01	ug/g	Jan 1 2001 12:00AM
241-AN-103	Ag	Supernatant	3.70E+01	kg	S	1.48	g/mL	1883	kL	1.33E+01	ug/g	Jan 1 2001 12:00AM
241-AN-103	Al	Salt Cake	1.62E+05	kg	S	1.72	g/mL	1533	kL	6.13E+04	ug/g	Jan 1 2001 12:00AM
241-AN-103	Al	Supernatant	5.64E+04	kg	S	1.48	g/mL	1883	kL	2.03E+04	ug/g	Jan 1 2001 12:00AM
241-AN-103	As	Salt Cake	1.69E+02	kg	S	1.69	g/mL	1533	kL	5.57E+01	ug/g	Jan 1 2001 12:00AM
241-AN-103	As	Supernatant	1.47E+02	kg	S	1.48	g/mL	1883	kL	5.28E+01	ug/g	Jan 1 2001 12:00AM
241-AN-103	B	Salt Cake	3.72E+02	kg	S	1.72	g/mL	1533	kL	1.41E+02	ug/g	Jan 1 2001 12:00AM
241-AN-103	B	Supernatant	1.50E+02	kg	S	1.48	g/mL	1883	kL	5.38E+01	ug/g	Jan 1 2001 12:00AM
241-AN-103	Ba	Supernatant	7.36E+01	kg	S	1.48	g/mL	1883	kL	2.64E+01	ug/g	Jan 1 2001 12:00AM
241-AN-103	Ba	Salt Cake	8.44E+01	kg	S	1.69	g/mL	1533	kL	2.79E+01	ug/g	Jan 1 2001 12:00AM
241-AN-103	Be	Salt Cake	8.44E+00	kg	S	1.69	g/mL	1533	kL	2.79E+00	ug/g	Jan 1 2001 12:00AM
241-AN-103	Be	Supernatant	7.35E+00	kg	S	1.48	g/mL	1883	kL	2.64E+00	ug/g	Jan 1 2001 12:00AM
241-AN-103	Bi	Salt Cake	1.69E+02	kg	S	1.69	g/mL	1533	kL	5.57E+01	ug/g	Jan 1 2001 12:00AM

CALCULATION SHEET

BY: E. Berrios
DATE: 12/04/02

PROJECT: RPP-WTP
JOB NO.: 24590
CALC NO: 24590-WTP-M4C-FRP-00001
SHEET REV 0A
SHEET NO.: 62

SUBJECT: Updated Emissions Run Feed Vector

Tank Name	Analyte	Waste Phase	Inventory	Inventory Units	Basis	Density	Density Units	Volume	Volume Units	Concentration	Concentration Units	Decay Date
241-AN-103	Bi	Supernatant	1.47E+02	kg	S	1.48	g/mL	1883	kL	5.28E+01	ug/g	Jan 1 2001 12:00AM
241-AN-103	Ca	Salt Cake	1.80E+02	kg	S	1.69	g/mL	1533	kL	1.25E+02	ug/g	Jan 1 2001 12:00AM
241-AN-103	Ca	Supernatant	1.47E+02	kg	S	1.48	g/mL	1883	kL	5.28E+01	ug/g	Jan 1 2001 12:00AM
241-AN-103	Cd	Supernatant	9.89E+00	kg	S	1.48	g/mL	1883	kL	3.55E+00	ug/g	Jan 1 2001 12:00AM
241-AN-103	Cd	Salt Cake	2.54E+01	kg	S	1.72	g/mL	1533	kL	9.62E+00	ug/g	Jan 1 2001 12:00AM
241-AN-103	Ce	Supernatant	1.47E+02	kg	S	1.48	g/mL	1883	kL	5.28E+01	ug/g	Jan 1 2001 12:00AM
241-AN-103	Ce	Salt Cake	1.69E+02	kg	S	1.69	g/mL	1533	kL	5.57E+01	ug/g	Jan 1 2001 12:00AM
241-AN-103	Cl	Salt Cake	1.03E+04	kg	S	1.72	g/mL	1533	kL	3.92E+03	ug/g	Jan 1 2001 12:00AM
241-AN-103	Cl	Supernatant	1.79E+04	kg	S	1.48	g/mL	1883	kL	6.43E+03	ug/g	Jan 1 2001 12:00AM
241-AN-103	CN	Supernatant	2.84E+01	kg	S	1.49	g/mL	1883	kL	1.19E+01	ug/g	Jan 1 2001 12:00AM
241-AN-103	Co	Supernatant	1.93E+01	kg	S	1.49	g/mL	1883	kL	8.05E+00	ug/g	Jan 1 2001 12:00AM
241-AN-103	Co	Salt Cake	7.24E+02	kg	S	1.72	g/mL	1533	kL	4.71E+01	ug/g	Jan 1 2001 12:00AM
241-AN-103	Cr	Supernatant	1.06E+03	kg	S	1.48	g/mL	1883	kL	3.79E+02	ug/g	Jan 1 2001 12:00AM
241-AN-103	Cr	Salt Cake	1.46E+03	kg	S	1.72	g/mL	1533	kL	5.53E+02	ug/g	Jan 1 2001 12:00AM
241-AN-103	Cu	Salt Cake	1.69E+01	kg	S	1.69	g/mL	1533	kL	5.57E+00	ug/g	Jan 1 2001 12:00AM
241-AN-103	Cu	Supernatant	1.49E+01	kg	S	1.48	g/mL	1883	kL	5.36E+00	ug/g	Jan 1 2001 12:00AM
241-AN-103	F	Salt Cake	2.28E+03	kg	S	1.72	g/mL	1533	kL	8.65E+02	ug/g	Jan 1 2001 12:00AM
241-AN-103	F	Supernatant	1.25E+03	kg	S	1.48	g/mL	1883	kL	4.47E+02	ug/g	Jan 1 2001 12:00AM
241-AN-103	Fe	Salt Cake	1.40E+02	kg	S	1.69	g/mL	1533	kL	4.61E+01	ug/g	Jan 1 2001 12:00AM
241-AN-103	Fe	Supernatant	7.51E+01	kg	S	1.48	g/mL	1883	kL	2.69E+01	ug/g	Jan 1 2001 12:00AM
241-AN-103	Hg	Salt Cake	4.66E+00	kg	E	1	g/mL	1533	kL	3.04E+00	ug/g	Jan 1 2001 12:00AM
241-AN-103	Hg	Supernatant	0.00E+00	kg	TE	1.6	g/mL	1883	kL	0.00E+00	ug/g	Jan 1 2001 12:00AM
241-AN-103	K	Salt Cake	1.68E+04	kg	S	1.72	g/mL	1533	kL	6.38E+03	ug/g	Jan 1 2001 12:00AM
241-AN-103	K	Supernatant	3.13E+04	kg	S	1.48	g/mL	1883	kL	1.12E+04	ug/g	Jan 1 2001 12:00AM
241-AN-103	La	Salt Cake	8.44E+01	kg	S	1.69	g/mL	1533	kL	2.79E+01	ug/g	Jan 1 2001 12:00AM
241-AN-103	La	Supernatant	2.77E+00	kg	TE	1.6	g/mL	1883	kL	1.10E+00	ug/g	Jan 1 2001 12:00AM
241-AN-103	Li	Supernatant	4.68E+01	kg	S	1.48	g/mL	1883	kL	1.68E+01	ug/g	Jan 1 2001 12:00AM
241-AN-103	Li	Salt Cake	1.57E+02	kg	S	1.72	g/mL	1533	kL	5.96E+01	ug/g	Jan 1 2001 12:00AM
241-AN-103	Mg	Supernatant	1.47E+02	kg	S	1.48	g/mL	1883	kL	5.28E+01	ug/g	Jan 1 2001 12:00AM
241-AN-103	Mg	Salt Cake	1.77E+02	kg	S	1.69	g/mL	1533	kL	5.85E+01	ug/g	Jan 1 2001 12:00AM
241-AN-103	Mn	Salt Cake	1.77E+01	kg	S	1.69	g/mL	1533	kL	5.85E+00	ug/g	Jan 1 2001 12:00AM
241-AN-103	Mn	Supernatant	1.47E+01	kg	S	1.48	g/mL	1883	kL	5.28E+00	ug/g	Jan 1 2001 12:00AM
241-AN-103	Mo	Salt Cake	1.11E+02	kg	S	1.69	g/mL	1533	kL	3.66E+01	ug/g	Jan 1 2001 12:00AM
241-AN-103	Mo	Supernatant	2.20E+02	kg	S	1.48	g/mL	1883	kL	7.89E+01	ug/g	Jan 1 2001 12:00AM
241-AN-103	Na	Salt Cake	5.51E+05	kg	S	1.72	g/mL	1533	kL	2.09E+05	ug/g	Jan 1 2001 12:00AM
241-AN-103	Na	Supernatant	5.08E+05	kg	S	1.48	g/mL	1883	kL	1.82E+05	ug/g	Jan 1 2001 12:00AM
241-AN-103	Nd	Supernatant	1.47E+02	kg	S	1.48	g/mL	1883	kL	5.28E+01	ug/g	Jan 1 2001 12:00AM
241-AN-103	Nd	Salt Cake	1.69E+02	kg	S	1.69	g/mL	1533	kL	5.57E+01	ug/g	Jan 1 2001 12:00AM
241-AN-103	Ni	Salt Cake	3.38E+01	kg	S	1.69	g/mL	1533	kL	1.12E+01	ug/g	Jan 1 2001 12:00AM
241-AN-103	Ni	Supernatant	2.94E+01	kg	S	1.48	g/mL	1883	kL	1.06E+01	ug/g	Jan 1 2001 12:00AM
241-AN-103	NO2	Salt Cake	1.84E+05	kg	S	1.72	g/mL	1533	kL	7.00E+04	ug/g	Jan 1 2001 12:00AM
241-AN-103	NO2	Supernatant	3.09E+05	kg	S	1.48	g/mL	1883	kL	1.11E+05	ug/g	Jan 1 2001 12:00AM
241-AN-103	NO3	Salt Cake	4.08E+05	kg	S	1.72	g/mL	1533	kL	1.55E+05	ug/g	Jan 1 2001 12:00AM
241-AN-103	NO3	Supernatant	3.15E+05	kg	S	1.48	g/mL	1883	kL	1.13E+05	ug/g	Jan 1 2001 12:00AM
241-AN-103	OH	Salt Cake	3.03E+05	kg	S	1.69	g/mL	1533	kL	3.39E+04	ug/g	Jan 1 2001 12:00AM
241-AN-103	OH	Supernatant	1.58E+05	kg	S	1.49	g/mL	1883	kL	6.59E+04	ug/g	Jan 1 2001 12:00AM
241-AN-103	Oxalate	Supernatant	2.30E+00	kg	TE	1.6	g/mL	1883	kL	9.13E-01	ug/g	Jan 1 2001 12:00AM

CALCULATION SHEET

PROJECT: RPP-WTP
JOB NO.: 24590
CALC NO.: 24590-WTP-M4C-FRP-00001
SHEET REV: 0A
SHEET NO.: 63

BY: E. Barlos
DATE: 12/04/02

SUBJECT: Updated Emissions Run Feed Vector

Tank Name	Analyte	Waste Phase	Inventory	Inventory Units	Basis	Density	Density Units	Volume	Volume Units	Concentration	Concentration Units	Decay Date
241-AN-103	Oxalate	Salt Cake	1.53E+04	kg	S	1.72	g/mL	1533	kL	5.79E+03	ug/g	Jan 1 2001 12:00AM
241-AN-103	Pb	Salt Cake	1.69E+02	kg	S	1.69	g/mL	1533	kL	5.57E+01	ug/g	Jan 1 2001 12:00AM
241-AN-103	Pb	Supernatant	2.91E+02	kg	S	1.48	g/mL	1883	kL	1.05E+02	ug/g	Jan 1 2001 12:00AM
241-AN-103	PO4	Salt Cake	5.74E+03	kg	S	1.72	g/mL	1533	kL	2.18E+03	ug/g	Jan 1 2001 12:00AM
241-AN-103	PO4	Supernatant	3.17E+03	kg	S	1.48	g/mL	1883	kL	1.14E+03	ug/g	Jan 1 2001 12:00AM
241-AN-103	Sb	Salt Cake	1.01E+02	kg	S	1.69	g/mL	1533	kL	3.34E+01	ug/g	Jan 1 2001 12:00AM
241-AN-103	Sb	Supernatant	8.83E+01	kg	S	1.48	g/mL	1883	kL	3.17E+01	ug/g	Jan 1 2001 12:00AM
241-AN-103	Se	Salt Cake	1.69E+02	kg	S	1.69	g/mL	1533	kL	5.57E+01	ug/g	Jan 1 2001 12:00AM
241-AN-103	Se	Supernatant	1.49E+02	kg	S	1.48	g/mL	1883	kL	5.33E+01	ug/g	Jan 1 2001 12:00AM
241-AN-103	Si	Salt Cake	1.20E+03	kg	TS	1.58	g/mL	1533	kL	4.28E+02	ug/g	Jan 1 2001 12:00AM
241-AN-103	Si	Supernatant	8.17E+02	kg	S	1.48	g/mL	1883	kL	2.93E+02	ug/g	Jan 1 2001 12:00AM
241-AN-103	SO4	Salt Cake	8.56E+03	kg	S	1.72	g/mL	1533	kL	3.25E+03	ug/g	Jan 1 2001 12:00AM
241-AN-103	SO4	Supernatant	2.41E+03	kg	S	1.48	g/mL	1883	kL	8.66E+02	ug/g	Jan 1 2001 12:00AM
241-AN-103	Sr	Salt Cake	1.69E+01	kg	S	1.69	g/mL	1533	kL	5.57E+00	ug/g	Jan 1 2001 12:00AM
241-AN-103	Sr	Supernatant	1.47E+01	kg	S	1.48	g/mL	1883	kL	5.28E+00	ug/g	Jan 1 2001 12:00AM
241-AN-103	Ta	Supernatant	4.83E+01	kg	S	1.49	g/mL	1883	kL	2.02E+01	ug/g	Jan 1 2001 12:00AM
241-AN-103	Th	Supernatant	4.83E+01	kg	S	1.49	g/mL	1883	kL	2.02E+01	ug/g	Jan 1 2001 12:00AM
241-AN-103	Ti	Supernatant	1.47E+01	kg	S	1.48	g/mL	1883	kL	5.28E+00	ug/g	Jan 1 2001 12:00AM
241-AN-103	Ti	Salt Cake	1.69E+01	kg	S	1.69	g/mL	1533	kL	5.57E+00	ug/g	Jan 1 2001 12:00AM
241-AN-103	TIC as CO3	Salt Cake	8.22E+04	kg	S	1.69	g/mL	1533	kL	2.71E+04	ug/g	Jan 1 2001 12:00AM
241-AN-103	TIC as CO3	Supernatant	9.28E+03	kg	S	1.49	g/mL	1883	kL	3.88E+03	ug/g	Jan 1 2001 12:00AM
241-AN-103	Tl	Supernatant	2.94E+02	kg	S	1.48	g/mL	1883	kL	1.05E+02	ug/g	Jan 1 2001 12:00AM
241-AN-103	Tl	Salt Cake	3.38E+02	kg	S	1.69	g/mL	1533	kL	1.12E+02	ug/g	Jan 1 2001 12:00AM
241-AN-103	UTOTAL	Salt Cake	1.37E+02	kg	S	1.69	g/mL	1533	kL	4.51E+01	ug/g	Jan 1 2001 12:00AM
241-AN-103	UTOTAL	Supernatant	2.95E+00	kg	S	1.49	g/mL	1883	kL	1.23E+00	ug/g	Jan 1 2001 12:00AM
241-AN-103	V	Supernatant	7.36E+01	kg	S	1.48	g/mL	1883	kL	2.64E+01	ug/g	Jan 1 2001 12:00AM
241-AN-103	V	Salt Cake	8.44E+01	kg	S	1.69	g/mL	1533	kL	2.79E+01	ug/g	Jan 1 2001 12:00AM
241-AN-103	W	Supernatant	5.37E+02	kg	S	1.49	g/mL	1883	kL	2.24E+02	ug/g	Jan 1 2001 12:00AM
241-AN-103	Y	Supernatant	9.65E+00	kg	S	1.49	g/mL	1883	kL	4.03E+00	ug/g	Jan 1 2001 12:00AM
241-AN-103	Zn	Salt Cake	8.66E+01	kg	S	1.72	g/mL	1533	kL	3.29E+01	ug/g	Jan 1 2001 12:00AM
241-AN-103	Zn	Supernatant	2.32E+01	kg	S	1.48	g/mL	1883	kL	8.31E+00	ug/g	Jan 1 2001 12:00AM
241-AN-103	Zr	Salt Cake	1.69E+01	kg	S	1.69	g/mL	1533	kL	5.57E+00	ug/g	Jan 1 2001 12:00AM
241-AN-103	Zr	Supernatant	1.80E+01	kg	S	1.48	g/mL	1883	kL	6.46E+00	ug/g	Jan 1 2001 12:00AM
241-AN-104	106Ru	Salt Cake	1.22E-04	Ci	TS	1.58	g/mL	1736	kL	4.97E-08	uCi/g	Jan 1 2001 12:00AM
241-AN-104	106Ru	Supernatant	7.76E-05	Ci	TE	1.6	g/mL	2083	kL	3.21E-08	uCi/g	Jan 1 2001 12:00AM
241-AN-104	113mCd	Salt Cake	1.11E+02	Ci	TS	1.58	g/mL	1736	kL	4.52E-02	uCi/g	Jan 1 2001 12:00AM
241-AN-104	113mCd	Supernatant	7.05E+01	Ci	TE	1.6	g/mL	2083	kL	2.92E-02	uCi/g	Jan 1 2001 12:00AM
241-AN-104	125Sb	Salt Cake	6.10E+01	Ci	TS	1.58	g/mL	1736	kL	2.48E-02	uCi/g	Jan 1 2001 12:00AM
241-AN-104	125Sb	Supernatant	3.88E+01	Ci	TE	1.6	g/mL	2083	kL	1.60E-02	uCi/g	Jan 1 2001 12:00AM
241-AN-104	126Sn	Salt Cake	3.43E+00	Ci	TS	1.58	g/mL	1736	kL	1.40E-03	uCi/g	Jan 1 2001 12:00AM
241-AN-104	126Sn	Supernatant	9.59E+00	Ci	S	1.41	g/mL	2083	kL	3.23E-03	uCi/g	Jan 1 2001 12:00AM
241-AN-104	129I	Salt Cake	2.75E-01	Ci	TS	1.58	g/mL	1736	kL	1.12E-04	uCi/g	Jan 1 2001 12:00AM
241-AN-104	129I	Supernatant	4.38E-01	Ci	S	1.41	g/mL	2083	kL	1.48E-04	uCi/g	Jan 1 2001 12:00AM
241-AN-104	134Cs	Salt Cake	2.66E-01	Ci	TS	1.58	g/mL	1736	kL	1.08E-04	uCi/g	Jan 1 2001 12:00AM
241-AN-104	134Cs	Supernatant	9.73E-01	Ci	TE	1.6	g/mL	2083	kL	4.03E-04	uCi/g	Jan 1 2001 12:00AM
241-AN-104	137Cs	Salt Cake	8.88E+05	Ci	S	1.57	g/mL	1736	kL	3.26E+02	uCi/g	Jan 1 2001 12:00AM
241-AN-104	137Cs	Supernatant	1.10E+06	Ci	S	1.41	g/mL	2083	kL	3.70E+02	uCi/g	Jan 1 2001 12:00AM

CALCULATION SHEET

PROJECT: RPP-WTP
JOB NO: 24590
CALC NO.: 24590-WTP-MC-FRP-00001
SHEET REV: 0A
SHEET NO.: 84

BY: E. Barton
DATE: 12/04/02

SUBJECT: Updated Emissions Run Feed Vector

Tank Name	Analyte	Waste Phase	Inventory	Inventory Units	Basis	Density	Density Units	Volume	Volume Units	Concentration	Concentration Units	Decay Date
241-AN-104	137mBa	Salt Cake	8.40E+05	Ci	C		g/mL	1736	kL		uCi/g	Jan 1 2001 12:00AM
241-AN-104	137mBa	Supernatant	1.04E+06	Ci	C		g/mL	2083	kL		uCi/g	Jan 1 2001 12:00AM
241-AN-104	14C	Salt Cake	4.62E+01	Ci	TS	1.58	g/mL	1736	kL	1.88E-02	uCi/g	Jan 1 2001 12:00AM
241-AN-104	14C	Supernatant	6.33E-01	Ci	S	1.41	g/mL	2083	kL	2.13E-04	uCi/g	Jan 1 2001 12:00AM
241-AN-104	151Sm	Salt Cake	1.89E+04	Ci	TS	1.58	g/mL	1736	kL	7.69E+00	uCi/g	Jan 1 2001 12:00AM
241-AN-104	151Sm	Supernatant	1.20E+04	Ci	TE	1.6	g/mL	2083	kL	4.97E+00	uCi/g	Jan 1 2001 12:00AM
241-AN-104	152Eu	Salt Cake	5.71E+00	Ci	TS	1.58	g/mL	1736	kL	2.32E-03	uCi/g	Jan 1 2001 12:00AM
241-AN-104	152Eu	Supernatant	3.63E+00	Ci	TE	1.6	g/mL	2083	kL	1.50E-03	uCi/g	Jan 1 2001 12:00AM
241-AN-104	154Eu	Salt Cake	1.89E+02	Ci	S	1.57	g/mL	1736	kL	6.94E-02	uCi/g	Jan 1 2001 12:00AM
241-AN-104	154Eu	Supernatant	1.22E+02	Ci	S	1.41	g/mL	2083	kL	4.10E-02	uCi/g	Jan 1 2001 12:00AM
241-AN-104	155Eu	Salt Cake	1.79E+02	Ci	TS	1.58	g/mL	1736	kL	7.29E-02	uCi/g	Jan 1 2001 12:00AM
241-AN-104	155Eu	Supernatant	1.14E+02	Ci	TE	1.6	g/mL	2083	kL	4.70E-02	uCi/g	Jan 1 2001 12:00AM
241-AN-104	226Ra	Salt Cake	2.28E-04	Ci	TS	1.58	g/mL	1736	kL	9.28E-08	uCi/g	Jan 1 2001 12:00AM
241-AN-104	226Ra	Supernatant	1.45E-04	Ci	TE	1.6	g/mL	2083	kL	5.99E-08	uCi/g	Jan 1 2001 12:00AM
241-AN-104	227Ac	Salt Cake	1.34E-03	Ci	TS	1.58	g/mL	1736	kL	5.46E-07	uCi/g	Jan 1 2001 12:00AM
241-AN-104	227Ac	Supernatant	8.52E-04	Ci	TE	1.6	g/mL	2083	kL	3.52E-07	uCi/g	Jan 1 2001 12:00AM
241-AN-104	228Ra	Salt Cake	5.01E-01	Ci	TS	1.58	g/mL	1736	kL	2.04E-04	uCi/g	Jan 1 2001 12:00AM
241-AN-104	228Ra	Supernatant	3.19E-01	Ci	TE	1.6	g/mL	2083	kL	1.32E-04	uCi/g	Jan 1 2001 12:00AM
241-AN-104	229Th	Salt Cake	1.16E-02	Ci	TS	1.58	g/mL	1736	kL	4.74E-06	uCi/g	Jan 1 2001 12:00AM
241-AN-104	229Th	Supernatant	7.39E-03	Ci	TE	1.6	g/mL	2083	kL	3.06E-06	uCi/g	Jan 1 2001 12:00AM
241-AN-104	231Pa	Salt Cake	6.27E-03	Ci	TS	1.58	g/mL	1736	kL	2.55E-06	uCi/g	Jan 1 2001 12:00AM
241-AN-104	231Pa	Supernatant	3.99E-03	Ci	TE	1.6	g/mL	2083	kL	1.65E-06	uCi/g	Jan 1 2001 12:00AM
241-AN-104	232Th	Salt Cake	6.12E-02	Ci	TS	1.58	g/mL	1736	kL	2.49E-05	uCi/g	Jan 1 2001 12:00AM
241-AN-104	232Th	Supernatant	1.32E-03	Ci	S	1.41	g/mL	2083	kL	4.44E-07	uCi/g	Jan 1 2001 12:00AM
241-AN-104	232U	Salt Cake	1.69E-01	Ci	C	1.57	g/mL	1736	kL	5.22E-04	uCi/g	Jan 1 2001 12:00AM
241-AN-104	232U	Supernatant	2.65E-03	Ci	C	1.41	g/mL	2083	kL	5.22E-04	uCi/g	Jan 1 2001 12:00AM
241-AN-104	233U	Supernatant	1.09E-02	Ci	C	1.41	g/mL	2083	kL	2.06E-03	uCi/g	Jan 1 2001 12:00AM
241-AN-104	233U	Salt Cake	6.93E-01	Ci	C	1.57	g/mL	1736	kL	2.06E-03	uCi/g	Jan 1 2001 12:00AM
241-AN-104	234U	Salt Cake	2.05E-01	Ci	C	1.57	g/mL	1736	kL	6.09E-04	uCi/g	Jan 1 2001 12:00AM
241-AN-104	234U	Supernatant	3.21E-03	Ci	C	1.41	g/mL	2083	kL	6.09E-04	uCi/g	Jan 1 2001 12:00AM
241-AN-104	235U	Salt Cake	7.99E-03	Ci	C	1.57	g/mL	1736	kL	2.38E-05	uCi/g	Jan 1 2001 12:00AM
241-AN-104	235U	Supernatant	1.25E-04	Ci	C	1.41	g/mL	2083	kL	2.38E-05	uCi/g	Jan 1 2001 12:00AM
241-AN-104	236U	Salt Cake	1.10E-02	Ci	C	1.57	g/mL	1736	kL	3.27E-05	uCi/g	Jan 1 2001 12:00AM
241-AN-104	236U	Supernatant	1.72E-04	Ci	C	1.41	g/mL	2083	kL	3.27E-05	uCi/g	Jan 1 2001 12:00AM
241-AN-104	237Np	Salt Cake	5.04E-01	Ci	TS	1.58	g/mL	1736	kL	2.05E-04	uCi/g	Jan 1 2001 12:00AM
241-AN-104	237Np	Supernatant	6.31E-02	Ci	S	1.41	g/mL	2083	kL	2.13E-05	uCi/g	Jan 1 2001 12:00AM
241-AN-104	238Pu	Salt Cake	3.65E-01	Ci	C	1.57	g/mL	1736	kL	1.32E-03	uCi/g	Jan 1 2001 12:00AM
241-AN-104	238Pu	Supernatant	1.35E-02	Ci	C	1.41	g/mL	2083	kL	1.32E-03	uCi/g	Jan 1 2001 12:00AM
241-AN-104	238U	Salt Cake	1.65E-01	Ci	C	1.57	g/mL	1736	kL	4.89E-04	uCi/g	Jan 1 2001 12:00AM
241-AN-104	238U	Supernatant	2.58E-03	Ci	C	1.41	g/mL	2083	kL	4.89E-04	uCi/g	Jan 1 2001 12:00AM
241-AN-104	239Pu	Salt Cake	8.31E+00	Ci	C	1.57	g/mL	1736	kL	2.91E-02	uCi/g	Jan 1 2001 12:00AM
241-AN-104	239Pu	Supernatant	3.08E-01	Ci	C	1.41	g/mL	2083	kL	2.91E-02	uCi/g	Jan 1 2001 12:00AM
241-AN-104	240Pu	Supernatant	6.05E-02	Ci	C	1.41	g/mL	2083	kL	5.73E-03	uCi/g	Jan 1 2001 12:00AM
241-AN-104	240Pu	Salt Cake	1.64E+00	Ci	C	1.57	g/mL	1736	kL	5.73E-03	uCi/g	Jan 1 2001 12:00AM
241-AN-104	241Am	Salt Cake	5.22E+01	Ci	E	1.57	g/mL	1736	kL	1.91E-02	uCi/g	Jan 1 2001 12:00AM
241-AN-104	241Am	Supernatant	7.31E-01	Ci	E	1.41	g/mL	2083	kL	2.47E-04	uCi/g	Jan 1 2001 12:00AM
241-AN-104	241Pu	Salt Cake	2.29E+01	Ci	E	1.57	g/mL	1736	kL	8.42E-03	uCi/g	Jan 1 2001 12:00AM

CALCULATION SHEET

PROJECT: BPP-WTP
JOB NO.: 24590
CALC NO.: 24590-WTP-M4C-FRP-00001
SHEET REV: 0A
SHEET NO.: 65

BY: E. Bertino
DATE: 12/04/00

SUBJECT: Updated Emissions Run Feed Vector

Tank Name	Analyte	Waste Phase	Inventory	Inventory Units	Basis	Density	Density Units	Volume	Volume Units	Concentration	Concentration Units	Decay Date
241-AN-104	241Pu	Supernatant	8.51E-01 Ci		E	1.41	g/mL	2083	kL	2.87E-04	uCi/g	Jan 1 2001 12:00AM
241-AN-104	242Cm	Salt Cake	1.18E-01 Ci		C	1.57	g/mL	1736	kL	8.75E-05	uCi/g	Jan 1 2001 12:00AM
241-AN-104	242Cm	Supernatant	1.64E-03 Ci		C	1.41	g/mL	2083	kL	8.75E-05	uCi/g	Jan 1 2001 12:00AM
241-AN-104	242Pu	Salt Cake	1.49E-04 Ci		C	1.57	g/mL	1736	kL	5.20E-07	uCi/g	Jan 1 2001 12:00AM
241-AN-104	242Pu	Supernatant	5.50E-06 Ci		C	1.41	g/mL	2083	kL	5.20E-07	uCi/g	Jan 1 2001 12:00AM
241-AN-104	243Am	Salt Cake	2.87E-03 Ci		C	1.57	g/mL	1736	kL	2.10E-06	uCi/g	Jan 1 2001 12:00AM
241-AN-104	243Am	Supernatant	4.01E-05 Ci		C	1.41	g/mL	2083	kL	2.10E-06	uCi/g	Jan 1 2001 12:00AM
241-AN-104	243Cm	Supernatant	1.41E-04 Ci		C	1.41	g/mL	2083	kL	8.08E-06	uCi/g	Jan 1 2001 12:00AM
241-AN-104	243Cm	Salt Cake	1.01E-02 Ci		C	1.57	g/mL	1736	kL	8.08E-06	uCi/g	Jan 1 2001 12:00AM
241-AN-104	244Cm	Salt Cake	9.27E-02 Ci		C	1.57	g/mL	1736	kL	7.85E-05	uCi/g	Jan 1 2001 12:00AM
241-AN-104	244Cm	Supernatant	1.29E-03 Ci		C	1.41	g/mL	2083	kL	7.85E-05	uCi/g	Jan 1 2001 12:00AM
241-AN-104	3H	Salt Cake	2.21E+01 Ci		S	1.57	g/mL	1736	kL	8.11E-03	uCi/g	Jan 1 2001 12:00AM
241-AN-104	3H	Supernatant	2.56E+00 Ci		S	1.41	g/mL	2083	kL	8.61E-04	uCi/g	Jan 1 2001 12:00AM
241-AN-104	59Ni	Salt Cake	3.71E+00 Ci		TS	1.58	g/mL	1736	kL	1.51E-03	uCi/g	Jan 1 2001 12:00AM
241-AN-104	59Ni	Supernatant	7.81E-01 Ci		TE	1.6	g/mL	2083	kL	3.23E-04	uCi/g	Jan 1 2001 12:00AM
241-AN-104	60Co	Salt Cake	4.27E+01 Ci		S	1.57	g/mL	1736	kL	1.57E-02	uCi/g	Jan 1 2001 12:00AM
241-AN-104	60Co	Supernatant	2.06E+01 Ci		S	1.41	g/mL	2083	kL	6.94E-03	uCi/g	Jan 1 2001 12:00AM
241-AN-104	63Ni	Salt Cake	3.52E+02 Ci		TS	1.58	g/mL	1736	kL	1.43E-01	uCi/g	Jan 1 2001 12:00AM
241-AN-104	63Ni	Supernatant	7.36E+01 Ci		TE	1.6	g/mL	2083	kL	3.05E-02	uCi/g	Jan 1 2001 12:00AM
241-AN-104	79Se	Supernatant	1.97E+00 Ci		S	1.41	g/mL	2083	kL	6.65E-04	uCi/g	Jan 1 2001 12:00AM
241-AN-104	79Se	Salt Cake	5.68E-01 Ci		TS	1.58	g/mL	1736	kL	2.31E-04	uCi/g	Jan 1 2001 12:00AM
241-AN-104	90Sr	Salt Cake	8.53E+04 Ci		S	1.57	g/mL	1736	kL	3.13E+01	uCi/g	Jan 1 2001 12:00AM
241-AN-104	90Sr	Supernatant	1.83E+02 Ci		S	1.41	g/mL	2083	kL	6.19E-02	uCi/g	Jan 1 2001 12:00AM
241-AN-104	90Y	Salt Cake	8.53E+04 Ci		C		g/mL	1736	kL		uCi/g	Jan 1 2001 12:00AM
241-AN-104	90Y	Supernatant	1.83E+02 Ci		C		g/mL	2083	kL		uCi/g	Jan 1 2001 12:00AM
241-AN-104	93mNb	Salt Cake	2.01E+01 Ci		TS	1.58	g/mL	1736	kL	8.19E-03	uCi/g	Jan 1 2001 12:00AM
241-AN-104	93mNb	Supernatant	1.28E+01 Ci		TE	1.6	g/mL	2083	kL	5.29E-03	uCi/g	Jan 1 2001 12:00AM
241-AN-104	93Zr	Salt Cake	2.80E+01 Ci		TS	1.58	g/mL	1736	kL	1.14E-02	uCi/g	Jan 1 2001 12:00AM
241-AN-104	93Zr	Supernatant	1.78E+01 Ci		TE	1.6	g/mL	2083	kL	7.37E-03	uCi/g	Jan 1 2001 12:00AM
241-AN-104	99Tc	Salt Cake	3.68E+02 Ci		S	1.57	g/mL	1736	kL	1.35E-01	uCi/g	Jan 1 2001 12:00AM
241-AN-104	99Tc	Supernatant	4.19E+02 Ci		S	1.41	g/mL	2083	kL	1.41E-01	uCi/g	Jan 1 2001 12:00AM
241-AN-104	Ag	Salt Cake	4.14E+01 kg		S	1.59	g/mL	1736	kL	1.50E+01	ug/g	Jan 1 2001 12:00AM
241-AN-104	Ag	Supernatant	3.72E+01 kg		S	1.4	g/mL	2083	kL	1.26E+01	ug/g	Jan 1 2001 12:00AM
241-AN-104	Al	Salt Cake	5.69E+04 kg		S	1.59	g/mL	1736	kL	2.06E+04	ug/g	Jan 1 2001 12:00AM
241-AN-104	Al	Supernatant	8.12E+04 kg		S	1.4	g/mL	2083	kL	2.76E+04	ug/g	Jan 1 2001 12:00AM
241-AN-104	As	Salt Cake	1.08E+02 kg		S	1.57	g/mL	1736	kL	3.98E+01	ug/g	Jan 1 2001 12:00AM
241-AN-104	As	Supernatant	1.43E+02 kg		S	1.4	g/mL	2083	kL	4.85E+01	ug/g	Jan 1 2001 12:00AM
241-AN-104	B	Supernatant	1.36E+02 kg		S	1.4	g/mL	2083	kL	4.63E+01	ug/g	Jan 1 2001 12:00AM
241-AN-104	B	Salt Cake	3.81E+02 kg		S	1.59	g/mL	1736	kL	1.38E+02	ug/g	Jan 1 2001 12:00AM
241-AN-104	Ba	Supernatant	6.33E+01 kg		S	1.41	g/mL	2083	kL	2.13E+01	ug/g	Jan 1 2001 12:00AM
241-AN-104	Ba	Salt Cake	5.42E+01 kg		S	1.57	g/mL	1736	kL	1.99E+01	ug/g	Jan 1 2001 12:00AM
241-AN-104	Be	Salt Cake	8.20E+00 kg		S	1.57	g/mL	1736	kL	3.01E+00	ug/g	Jan 1 2001 12:00AM
241-AN-104	Be	Supernatant	6.31E+00 kg		S	1.41	g/mL	2083	kL	2.13E+00	ug/g	Jan 1 2001 12:00AM
241-AN-104	Bi	Salt Cake	1.08E+02 kg		S	1.57	g/mL	1736	kL	3.98E+01	ug/g	Jan 1 2001 12:00AM
241-AN-104	Bi	Supernatant	1.26E+02 kg		S	1.41	g/mL	2083	kL	4.26E+01	ug/g	Jan 1 2001 12:00AM
241-AN-104	Ca	Salt Cake	5.91E+02 kg		S	1.59	g/mL	1736	kL	2.14E+02	ug/g	Jan 1 2001 12:00AM
241-AN-104	Ca	Supernatant	1.26E+02 kg		S	1.41	g/mL	2083	kL	4.26E+01	ug/g	Jan 1 2001 12:00AM

CALCULATION SHEET

PROJECT: RPP-WTP
JOB NO.: 24590
CALC NO.: 24590-WTP-AMC-FRP-00001
SHEET REV: 06
SHEET NO.: 08

BY: E. Barrios
DATE: 12/04/02

SUBJECT: Updated Emissions Run Feed Vector

Tank Name	Analyte	Waste Phase	Inventory	Inventory Units	Basis	Density	Density Units	Volume	Volume Units	Concentration	Concentration Units	Decay Date
241-AN-104	Cd	Salt Cake	2.72E+01	kg	S	1.59	g/mL	1736	kL	9.86E+00	ug/g	Jan 1 2001 12:00AM
241-AN-104	Cd	Supernatant	6.31E+00	kg	S	1.41	g/mL	2083	kL	2.13E+00	ug/g	Jan 1 2001 12:00AM
241-AN-104	Ce	Supernatant	1.26E+02	kg	S	1.41	g/mL	2083	kL	4.26E+01	ug/g	Jan 1 2001 12:00AM
241-AN-104	Ce	Salt Cake	1.08E+02	kg	S	1.57	g/mL	1736	kL	3.98E+01	ug/g	Jan 1 2001 12:00AM
241-AN-104	Cl	Salt Cake	1.23E+04	kg	S	1.59	g/mL	1736	kL	4.46E+03	ug/g	Jan 1 2001 12:00AM
241-AN-104	Cl	Supernatant	1.63E+04	kg	S	1.4	g/mL	2083	kL	5.54E+03	ug/g	Jan 1 2001 12:00AM
241-AN-104	Co	Supernatant	2.52E+01	kg	S	1.4	g/mL	2083	kL	8.57E+00	ug/g	Jan 1 2001 12:00AM
241-AN-104	Co	Salt Cake	2.17E+01	kg	S	1.57	g/mL	1736	kL	7.96E+00	ug/g	Jan 1 2001 12:00AM
241-AN-104	Cr	Salt Cake	4.28E+03	kg	S	1.59	g/mL	1736	kL	1.55E+03	ug/g	Jan 1 2001 12:00AM
241-AN-104	Cr	Supernatant	7.07E+02	kg	S	1.4	g/mL	2083	kL	2.40E+02	ug/g	Jan 1 2001 12:00AM
241-AN-104	Cs	Supernatant	1.26E+01	kg	S	1.41	g/mL	2083	kL	4.26E+00	ug/g	Jan 1 2001 12:00AM
241-AN-104	Cs	Salt Cake	2.11E+01	kg	S	1.59	g/mL	1736	kL	7.64E+00	ug/g	Jan 1 2001 12:00AM
241-AN-104	F	Salt Cake	2.22E+03	kg	S	1.59	g/mL	1736	kL	8.03E+02	ug/g	Jan 1 2001 12:00AM
241-AN-104	F	Supernatant	1.72E+02	kg	S	1.41	g/mL	2083	kL	5.81E+01	ug/g	Jan 1 2001 12:00AM
241-AN-104	Fe	Salt Cake	3.17E+02	kg	S	1.59	g/mL	1736	kL	1.15E+02	ug/g	Jan 1 2001 12:00AM
241-AN-104	Fe	Supernatant	6.33E+01	kg	S	1.41	g/mL	2083	kL	2.13E+01	ug/g	Jan 1 2001 12:00AM
241-AN-104	Hg	Salt Cake	0.00E+00	kg	TS	1.58	g/mL	1736	kL	0.00E+00	ug/g	Jan 1 2001 12:00AM
241-AN-104	Hg	Supernatant	0.00E+00	kg	TE	1.6	g/mL	2083	kL	0.00E+00	ug/g	Jan 1 2001 12:00AM
241-AN-104	K	Salt Cake	9.88E+03	kg	S	1.59	g/mL	1736	kL	3.58E+03	ug/g	Jan 1 2001 12:00AM
241-AN-104	K	Supernatant	1.41E+04	kg	S	1.4	g/mL	2083	kL	4.78E+03	ug/g	Jan 1 2001 12:00AM
241-AN-104	La	Salt Cake	5.42E+01	kg	S	1.57	g/mL	1736	kL	1.99E+01	ug/g	Jan 1 2001 12:00AM
241-AN-104	La	Supernatant	6.33E+01	kg	S	1.41	g/mL	2083	kL	2.13E+01	ug/g	Jan 1 2001 12:00AM
241-AN-104	Li	Supernatant	2.48E+01	kg	S	1.4	g/mL	2083	kL	8.43E+00	ug/g	Jan 1 2001 12:00AM
241-AN-104	Li	Salt Cake	4.47E+01	kg	S	1.59	g/mL	1736	kL	1.62E+01	ug/g	Jan 1 2001 12:00AM
241-AN-104	Mg	Supernatant	1.26E+02	kg	S	1.41	g/mL	2083	kL	4.26E+01	ug/g	Jan 1 2001 12:00AM
241-AN-104	Mg	Salt Cake	1.08E+02	kg	S	1.57	g/mL	1736	kL	3.98E+01	ug/g	Jan 1 2001 12:00AM
241-AN-104	Mn	Salt Cake	4.72E+01	kg	S	1.59	g/mL	1736	kL	1.71E+01	ug/g	Jan 1 2001 12:00AM
241-AN-104	Mn	Supernatant	1.26E+01	kg	S	1.41	g/mL	2083	kL	4.26E+00	ug/g	Jan 1 2001 12:00AM
241-AN-104	Mo	Salt Cake	1.38E+02	kg	S	1.59	g/mL	1736	kL	5.00E+01	ug/g	Jan 1 2001 12:00AM
241-AN-104	Mo	Supernatant	1.69E+02	kg	S	1.4	g/mL	2083	kL	5.74E+01	ug/g	Jan 1 2001 12:00AM
241-AN-104	Na	Salt Cake	5.33E+05	kg	S	1.59	g/mL	1736	kL	1.93E+05	ug/g	Jan 1 2001 12:00AM
241-AN-104	Na	Supernatant	5.39E+05	kg	S	1.4	g/mL	2083	kL	1.83E+05	ug/g	Jan 1 2001 12:00AM
241-AN-104	Nd	Supernatant	1.26E+02	kg	S	1.41	g/mL	2083	kL	4.26E+01	ug/g	Jan 1 2001 12:00AM
241-AN-104	Nd	Salt Cake	1.08E+02	kg	S	1.57	g/mL	1736	kL	3.98E+01	ug/g	Jan 1 2001 12:00AM
241-AN-104	NH3	Supernatant	4.69E+02	kg	S	1.41	g/mL	2083	kL	1.58E+02	ug/g	Jan 1 2001 12:00AM
241-AN-104	Ni	Salt Cake	1.67E+02	kg	S	1.59	g/mL	1736	kL	6.04E+01	ug/g	Jan 1 2001 12:00AM
241-AN-104	Ni	Supernatant	2.52E+01	kg	S	1.41	g/mL	2083	kL	8.51E+00	ug/g	Jan 1 2001 12:00AM
241-AN-104	NO2	Salt Cake	1.75E+05	kg	S	1.59	g/mL	1736	kL	6.33E+04	ug/g	Jan 1 2001 12:00AM
241-AN-104	NO2	Supernatant	2.34E+05	kg	S	1.4	g/mL	2083	kL	7.93E+04	ug/g	Jan 1 2001 12:00AM
241-AN-104	NO3	Salt Cake	3.28E+05	kg	S	1.59	g/mL	1736	kL	1.19E+05	ug/g	Jan 1 2001 12:00AM
241-AN-104	NO3	Supernatant	3.58E+05	kg	S	1.4	g/mL	2083	kL	1.21E+05	ug/g	Jan 1 2001 12:00AM
241-AN-104	OH	Salt Cake	1.01E+05	kg	S	1.57	g/mL	1736	kL	3.72E+04	ug/g	Jan 1 2001 12:00AM
241-AN-104	OH	Supernatant	1.49E+05	kg	S	1.41	g/mL	2083	kL	5.03E+04	ug/g	Jan 1 2001 12:00AM
241-AN-104	Oxalate	Salt Cake	2.34E+04	kg	S	1.59	g/mL	1736	kL	8.47E+03	ug/g	Jan 1 2001 12:00AM
241-AN-104	Oxalate	Supernatant	1.56E+03	kg	S	1.41	g/mL	2083	kL	5.27E+02	ug/g	Jan 1 2001 12:00AM
241-AN-104	Pb	Salt Cake	1.14E+02	kg	S	1.57	g/mL	1736	kL	4.20E+01	ug/g	Jan 1 2001 12:00AM
241-AN-104	Pb	Supernatant	1.26E+02	kg	S	1.41	g/mL	2083	kL	4.26E+01	ug/g	Jan 1 2001 12:00AM

CALCULATION SHEET

PROJECT: RPP-WTP
JOB NO.: 24590
CALC NO.: 24590-WTP-M4C-FRP-00001
SHEET REV: 0A
SHEET NO.: 67

BY: E. Berrios
DATE: 12/04/02

SUBJECT: Updated Emissions Run Feed Vector

Tank Name	Analyte	Waste Phase	Inventory	Inventory Units	Basis	Density	Density Units	Volume	Volume Units	Concentration	Concentration Units	Decay Date
241-AN-104	PO4	Salt Cake	1.16E+04	kg	S	1.59	g/mL	1736	kL	4.20E+03	ug/g	Jan 1 2001 12:00AM
241-AN-104	PO4	Supernatant	5.69E+03	kg	S	1.4	g/mL	2083	kL	1.93E+03	ug/g	Jan 1 2001 12:00AM
241-AN-104	Sb	Salt Cake	6.51E+01	kg	S	1.57	g/mL	1736	kL	2.39E+01	ug/g	Jan 1 2001 12:00AM
241-AN-104	Sb	Supernatant	7.59E+01	kg	S	1.41	g/mL	2083	kL	2.56E+01	ug/g	Jan 1 2001 12:00AM
241-AN-104	Se	Salt Cake	1.08E+02	kg	S	1.57	g/mL	1736	kL	3.98E+01	ug/g	Jan 1 2001 12:00AM
241-AN-104	Se	Supernatant	1.26E+02	kg	S	1.41	g/mL	2083	kL	4.26E+01	ug/g	Jan 1 2001 12:00AM
241-AN-104	Si	Salt Cake	1.77E+03	kg	S	1.59	g/mL	1736	kL	6.41E+02	ug/g	Jan 1 2001 12:00AM
241-AN-104	Si	Supernatant	4.90E+02	kg	S	1.4	g/mL	2083	kL	1.66E+02	ug/g	Jan 1 2001 12:00AM
241-AN-104	SO4	Salt Cake	3.35E+04	kg	S	1.59	g/mL	1736	kL	1.21E+04	ug/g	Jan 1 2001 12:00AM
241-AN-104	SO4	Supernatant	7.45E+03	kg	S	1.4	g/mL	2083	kL	2.53E+03	ug/g	Jan 1 2001 12:00AM
241-AN-104	Sr	Salt Cake	1.08E+01	kg	S	1.57	g/mL	1736	kL	3.98E+00	ug/g	Jan 1 2001 12:00AM
241-AN-104	Sr	Supernatant	1.26E+01	kg	S	1.41	g/mL	2083	kL	4.26E+00	ug/g	Jan 1 2001 12:00AM
241-AN-104	Ti	Supernatant	1.26E+01	kg	S	1.41	g/mL	2083	kL	4.26E+00	ug/g	Jan 1 2001 12:00AM
241-AN-104	Ti	Salt Cake	1.08E+01	kg	S	1.57	g/mL	1736	kL	3.98E+00	ug/g	Jan 1 2001 12:00AM
241-AN-104	TIC as CO3	Salt Cake	1.74E+05	kg	S	1.57	g/mL	1736	kL	6.40E+04	ug/g	Jan 1 2001 12:00AM
241-AN-104	TIC as CO3	Supernatant	2.25E+04	kg	S	1.41	g/mL	2083	kL	7.59E+03	ug/g	Jan 1 2001 12:00AM
241-AN-104	Tl	Supernatant	2.52E+02	kg	S	1.41	g/mL	2083	kL	8.51E+01	ug/g	Jan 1 2001 12:00AM
241-AN-104	Tl	Salt Cake	2.17E+02	kg	S	1.57	g/mL	1736	kL	7.95E+01	ug/g	Jan 1 2001 12:00AM
241-AN-104	UTOTAL	Salt Cake	4.93E+02	kg	S	1.57	g/mL	1736	kL	1.81E+02	ug/g	Jan 1 2001 12:00AM
241-AN-104	UTOTAL	Supernatant	7.74E+00	kg	S	1.41	g/mL	2083	kL	2.61E+00	ug/g	Jan 1 2001 12:00AM
241-AN-104	V	Supernatant	6.33E+01	kg	S	1.41	g/mL	2083	kL	2.13E+01	ug/g	Jan 1 2001 12:00AM
241-AN-104	V	Salt Cake	5.42E+01	kg	S	1.57	g/mL	1736	kL	1.99E+01	ug/g	Jan 1 2001 12:00AM
241-AN-104	Zn	Supernatant	3.05E+01	kg	S	1.4	g/mL	2083	kL	1.04E+01	ug/g	Jan 1 2001 12:00AM
241-AN-104	Zn	Salt Cake	5.77E+01	kg	S	1.59	g/mL	1736	kL	2.09E+01	ug/g	Jan 1 2001 12:00AM
241-AN-104	Zr	Salt Cake	4.66E+01	kg	S	1.59	g/mL	1736	kL	1.69E+01	ug/g	Jan 1 2001 12:00AM
241-AN-104	Zr	Supernatant	1.65E+01	kg	S	1.4	g/mL	2083	kL	5.60E+00	ug/g	Jan 1 2001 12:00AM
241-AN-105	106Ru	Salt Cake	1.37E-04	Ci	TS	1.58	g/mL	1925	kL	4.97E-08	uCi/g	Jan 1 2001 12:00AM
241-AN-105	106Ru	Supernatant	8.61E-05	Ci	TE	1.6	g/mL	2227	kL	3.21E-08	uCi/g	Jan 1 2001 12:00AM
241-AN-105	113mCd	Salt Cake	1.24E+02	Ci	TS	1.58	g/mL	1925	kL	4.52E-02	uCi/g	Jan 1 2001 12:00AM
241-AN-105	113mCd	Supernatant	7.83E+01	Ci	TE	1.6	g/mL	2227	kL	2.92E-02	uCi/g	Jan 1 2001 12:00AM
241-AN-105	125Sb	Salt Cake	6.83E+01	Ci	TS	1.58	g/mL	1925	kL	2.48E-02	uCi/g	Jan 1 2001 12:00AM
241-AN-105	125Sb	Supernatant	4.30E+01	Ci	TE	1.6	g/mL	2227	kL	1.60E-02	uCi/g	Jan 1 2001 12:00AM
241-AN-105	126Sn	Salt Cake	3.85E+00	Ci	TS	1.58	g/mL	1925	kL	1.40E-03	uCi/g	Jan 1 2001 12:00AM
241-AN-105	126Sn	Supernatant	2.42E+00	Ci	TE	1.6	g/mL	2227	kL	9.02E-04	uCi/g	Jan 1 2001 12:00AM
241-AN-105	129I	Salt Cake	3.09E-01	Ci	TS	1.58	g/mL	1925	kL	1.12E-04	uCi/g	Jan 1 2001 12:00AM
241-AN-105	129I	Supernatant	5.96E-01	Ci	S	1.42	g/mL	2227	kL	1.88E-04	uCi/g	Jan 1 2001 12:00AM
241-AN-105	134Cs	Salt Cake	2.99E-01	Ci	TS	1.58	g/mL	1925	kL	1.08E-04	uCi/g	Jan 1 2001 12:00AM
241-AN-105	134Cs	Supernatant	1.08E+00	Ci	TE	1.6	g/mL	2227	kL	4.03E-04	uCi/g	Jan 1 2001 12:00AM
241-AN-105	137Cs	Salt Cake	8.10E+05	Ci	S	1.57	g/mL	1925	kL	2.68E+02	uCi/g	Jan 1 2001 12:00AM
241-AN-105	137Cs	Supernatant	6.98E+05	Ci	S	1.42	g/mL	2227	kL	2.21E+02	uCi/g	Jan 1 2001 12:00AM
241-AN-105	137mBa	Salt Cake	7.66E+05	Ci	C		g/mL	1925	kL		uCi/g	Jan 1 2001 12:00AM
241-AN-105	137mBa	Supernatant	6.61E+05	Ci	C		g/mL	2227	kL		uCi/g	Jan 1 2001 12:00AM
241-AN-105	14C	Salt Cake	5.18E+01	Ci	TS	1.58	g/mL	1925	kL	1.88E-02	uCi/g	Jan 1 2001 12:00AM
241-AN-105	14C	Supernatant	7.31E-01	Ci	S	1.42	g/mL	2227	kL	2.31E-04	uCi/g	Jan 1 2001 12:00AM
241-AN-105	151Sm	Salt Cake	2.12E+04	Ci	TS	1.58	g/mL	1925	kL	7.69E+00	uCi/g	Jan 1 2001 12:00AM
241-AN-105	151Sm	Supernatant	1.33E+04	Ci	TE	1.6	g/mL	2227	kL	4.97E+00	uCi/g	Jan 1 2001 12:00AM
241-AN-105	152Eu	Salt Cake	6.40E+00	Ci	TS	1.58	g/mL	1925	kL	2.32E-03	uCi/g	Jan 1 2001 12:00AM

CALCULATION SHEET

PROJECT: RPP-WTP
JOB NO.: 24590
CALC NO.: 24590-WTP-M4C-FRP-00001
SHEET REV: 0A
SHEET NO.: 69

BY: E. Berrios
DATE: 12/04/02

SUBJECT: Updated Emissions Run Feed Vector

Tank Name	Analyte	Waste Phase	Inventory	Inventory Units	Basis	Density	Density Units	Volume	Volume Units	Concentration	Concentration Units	Decay Date
241-AN-105	152Eu	Supernatant	4.03E+00	Ci	TE	1.6	g/mL	2227	kL	1.50E-03	uCi/g	Jan 1 2001 12:00AM
241-AN-105	154Eu	Salt Cake	1.94E+02	Ci	S	1.57	g/mL	1925	kL	6.43E-02	uCi/g	Jan 1 2001 12:00AM
241-AN-105	154Eu	Supernatant	5.85E+01	Ci	S	1.42	g/mL	2227	kL	1.85E-02	uCi/g	Jan 1 2001 12:00AM
241-AN-105	155Eu	Salt Cake	1.19E+02	Ci	E	1.57	g/mL	1925	kL	3.93E-02	uCi/g	Jan 1 2001 12:00AM
241-AN-105	155Eu	Supernatant	3.58E+01	Ci	E	1.42	g/mL	2227	kL	1.13E-02	uCi/g	Jan 1 2001 12:00AM
241-AN-105	226Ra	Salt Cake	2.56E-04	Ci	TS	1.58	g/mL	1925	kL	9.28E-08	uCi/g	Jan 1 2001 12:00AM
241-AN-105	226Ra	Supernatant	1.61E-04	Ci	TE	1.6	g/mL	2227	kL	5.99E-08	uCi/g	Jan 1 2001 12:00AM
241-AN-105	227Ac	Salt Cake	2.61E-03	Ci	TS	1.58	g/mL	1925	kL	9.46E-07	uCi/g	Jan 1 2001 12:00AM
241-AN-105	227Ac	Supernatant	1.64E-03	Ci	TE	1.6	g/mL	2227	kL	6.12E-07	uCi/g	Jan 1 2001 12:00AM
241-AN-105	228Ra	Salt Cake	3.08E-01	Ci	TS	1.58	g/mL	1925	kL	1.12E-04	uCi/g	Jan 1 2001 12:00AM
241-AN-105	228Ra	Supernatant	1.94E-01	Ci	TE	1.6	g/mL	2227	kL	7.22E-05	uCi/g	Jan 1 2001 12:00AM
241-AN-105	229Th	Salt Cake	1.31E-02	Ci	TS	1.58	g/mL	1925	kL	4.74E-06	uCi/g	Jan 1 2001 12:00AM
241-AN-105	229Th	Supernatant	8.21E-03	Ci	TE	1.6	g/mL	2227	kL	3.06E-06	uCi/g	Jan 1 2001 12:00AM
241-AN-105	231Pa	Salt Cake	7.03E-03	Ci	TS	1.58	g/mL	1925	kL	2.55E-06	uCi/g	Jan 1 2001 12:00AM
241-AN-105	231Pa	Supernatant	4.43E-03	Ci	TE	1.6	g/mL	2227	kL	1.65E-06	uCi/g	Jan 1 2001 12:00AM
241-AN-105	232Th	Salt Cake	6.86E-02	Ci	TS	1.58	g/mL	1925	kL	2.49E-05	uCi/g	Jan 1 2001 12:00AM
241-AN-105	232Th	Supernatant	4.31E-02	Ci	TE	1.6	g/mL	2227	kL	1.61E-05	uCi/g	Jan 1 2001 12:00AM
241-AN-105	232U	Salt Cake	1.13E-01	Ci	C	1.57	g/mL	1925	kL	3.73E-05	uCi/g	Jan 1 2001 12:00AM
241-AN-105	232U	Supernatant	3.40E-03	Ci	C	1.42	g/mL	2227	kL	1.07E-06	uCi/g	Jan 1 2001 12:00AM
241-AN-105	233U	Salt Cake	4.62E-01	Ci	C	1.57	g/mL	1925	kL	1.53E-04	uCi/g	Jan 1 2001 12:00AM
241-AN-105	233U	Supernatant	1.39E-02	Ci	C	1.42	g/mL	2227	kL	4.41E-06	uCi/g	Jan 1 2001 12:00AM
241-AN-105	234U	Salt Cake	1.05E-01	Ci	C	1.57	g/mL	1925	kL	3.47E-05	uCi/g	Jan 1 2001 12:00AM
241-AN-105	234U	Supernatant	3.16E-03	Ci	C	1.42	g/mL	2227	kL	1.00E-06	uCi/g	Jan 1 2001 12:00AM
241-AN-105	235U	Salt Cake	4.12E-03	Ci	C	1.57	g/mL	1925	kL	1.36E-06	uCi/g	Jan 1 2001 12:00AM
241-AN-105	235U	Supernatant	1.24E-04	Ci	C	1.42	g/mL	2227	kL	3.93E-08	uCi/g	Jan 1 2001 12:00AM
241-AN-105	236U	Salt Cake	4.76E-03	Ci	C	1.57	g/mL	1925	kL	1.57E-06	uCi/g	Jan 1 2001 12:00AM
241-AN-105	236U	Supernatant	1.43E-04	Ci	C	1.42	g/mL	2227	kL	4.54E-08	uCi/g	Jan 1 2001 12:00AM
241-AN-105	237Np	Salt Cake	5.65E-01	Ci	TS	1.58	g/mL	1925	kL	2.05E-04	uCi/g	Jan 1 2001 12:00AM
241-AN-105	237Np	Supernatant	4.75E-02	Ci	S	1.42	g/mL	2227	kL	1.50E-05	uCi/g	Jan 1 2001 12:00AM
241-AN-105	238Pu	Salt Cake	2.13E-01	Ci	C	1.57	g/mL	1925	kL	7.03E-05	uCi/g	Jan 1 2001 12:00AM
241-AN-105	238Pu	Supernatant	2.50E-03	Ci	C	1.42	g/mL	2227	kL	7.89E-07	uCi/g	Jan 1 2001 12:00AM
241-AN-105	238U	Salt Cake	8.77E-02	Ci	C	1.57	g/mL	1925	kL	2.90E-05	uCi/g	Jan 1 2001 12:00AM
241-AN-105	238U	Supernatant	2.64E-03	Ci	C	1.42	g/mL	2227	kL	8.36E-07	uCi/g	Jan 1 2001 12:00AM
241-AN-105	239Pu	Salt Cake	5.73E+00	Ci	C	1.57	g/mL	1925	kL	1.90E-03	uCi/g	Jan 1 2001 12:00AM
241-AN-105	239Pu	Supernatant	6.73E-02	Ci	C	1.42	g/mL	2227	kL	2.13E-05	uCi/g	Jan 1 2001 12:00AM
241-AN-105	240Pu	Salt Cake	1.08E+00	Ci	C	1.57	g/mL	1925	kL	3.58E-04	uCi/g	Jan 1 2001 12:00AM
241-AN-105	240Pu	Supernatant	1.27E-02	Ci	C	1.42	g/mL	2227	kL	4.02E-06	uCi/g	Jan 1 2001 12:00AM
241-AN-105	241Am	Salt Cake	2.07E+01	Ci	S	1.57	g/mL	1925	kL	6.86E-03	uCi/g	Jan 1 2001 12:00AM
241-AN-105	241Am	Supernatant	8.33E-02	Ci	S	1.42	g/mL	2227	kL	2.63E-05	uCi/g	Jan 1 2001 12:00AM
241-AN-105	241Pu	Salt Cake	1.25E+01	Ci	C	1.57	g/mL	1925	kL	4.13E-03	uCi/g	Jan 1 2001 12:00AM
241-AN-105	241Pu	Supernatant	1.47E-01	Ci	C	1.42	g/mL	2227	kL	4.64E-05	uCi/g	Jan 1 2001 12:00AM
241-AN-105	242Cm	Salt Cake	4.60E-02	Ci	C	1.57	g/mL	1925	kL	1.52E-05	uCi/g	Jan 1 2001 12:00AM
241-AN-105	242Cm	Supernatant	1.83E-04	Ci	C	1.42	g/mL	2227	kL	5.79E-08	uCi/g	Jan 1 2001 12:00AM
241-AN-105	242Pu	Salt Cake	8.68E-05	Ci	C	1.57	g/mL	1925	kL	2.87E-08	uCi/g	Jan 1 2001 12:00AM
241-AN-105	242Pu	Supernatant	1.02E-06	Ci	C	1.42	g/mL	2227	kL	3.22E-10	uCi/g	Jan 1 2001 12:00AM
241-AN-105	243Am	Salt Cake	9.06E-04	Ci	C	1.57	g/mL	1925	kL	3.00E-07	uCi/g	Jan 1 2001 12:00AM
241-AN-105	243Am	Supernatant	3.60E-06	Ci	C	1.42	g/mL	2227	kL	1.14E-09	uCi/g	Jan 1 2001 12:00AM

CALCULATION SHEET

PROJECT: RPP-WTP
JOB NO.: 24590
CALC NO.: 24590-WTP-M4C-FRP-00001
SHEET REV: 04
SHEET NO.: 69

BY: E. Barnes
DATE: 12/04/02

SUBJECT: Updated Emissions Run Feed Vector

Tank Name	Analyte	Waste Phase	Inventory	Inventory Units	Basis	Density	Density Units	Volume	Volume Units	Concentration	Concentration Units	Decay Date
241-AN-105	243Cm	Salt Cake	3.98E-03	Ci	C	1.57	g/mL	1925	kL	1.32E-06	uCi/g	Jan 1 2001 12:00AM
241-AN-105	243Cm	Supernatant	1.58E-05	Ci	C	1.42	g/mL	2227	kL	5.00E-09	uCi/g	Jan 1 2001 12:00AM
241-AN-105	244Cm	Salt Cake	3.39E-02	Ci	C	1.57	g/mL	1925	kL	1.12E-05	uCi/g	Jan 1 2001 12:00AM
241-AN-105	244Cm	Supernatant	1.35E-04	Ci	C	1.42	g/mL	2227	kL	4.27E-08	uCi/g	Jan 1 2001 12:00AM
241-AN-105	3H	Salt Cake	4.91E+00	Ci	S	1.57	g/mL	1925	kL	1.62E-03	uCi/g	Jan 1 2001 12:00AM
241-AN-105	3H	Supernatant	6.87E-02	Ci	S	1.42	g/mL	2227	kL	2.17E-05	uCi/g	Jan 1 2001 12:00AM
241-AN-105	59Ni	Salt Cake	4.16E+00	Ci	TS	1.58	g/mL	1925	kL	1.51E-03	uCi/g	Jan 1 2001 12:00AM
241-AN-105	59Ni	Supernatant	8.67E-01	Ci	TE	1.6	g/mL	2227	kL	3.23E-04	uCi/g	Jan 1 2001 12:00AM
241-AN-105	60Co	Salt Cake	4.55E+01	Ci	TS	1.58	g/mL	1925	kL	1.65E-02	uCi/g	Jan 1 2001 12:00AM
241-AN-105	60Co	Supernatant	9.65E+00	Ci	S	1.42	g/mL	2227	kL	3.05E-03	uCi/g	Jan 1 2001 12:00AM
241-AN-105	63Ni	Salt Cake	3.95E+02	Ci	TS	1.58	g/mL	1925	kL	1.43E-01	uCi/g	Jan 1 2001 12:00AM
241-AN-105	63Ni	Supernatant	8.18E+01	Ci	TE	1.6	g/mL	2227	kL	3.05E-02	uCi/g	Jan 1 2001 12:00AM
241-AN-105	79Se	Salt Cake	6.37E-01	Ci	TS	1.58	g/mL	1925	kL	2.31E-04	uCi/g	Jan 1 2001 12:00AM
241-AN-105	79Se	Supernatant	4.01E-01	Ci	TE	1.6	g/mL	2227	kL	1.49E-04	uCi/g	Jan 1 2001 12:00AM
241-AN-105	90Sr	Salt Cake	3.09E+04	Ci	S	1.57	g/mL	1925	kL	1.02E+01	uCi/g	Jan 1 2001 12:00AM
241-AN-105	90Sr	Supernatant	8.32E+01	Ci	S	1.42	g/mL	2227	kL	2.63E-02	uCi/g	Jan 1 2001 12:00AM
241-AN-105	90Y	Salt Cake	3.09E+04	Ci	C		g/mL	1925	kL		uCi/g	Jan 1 2001 12:00AM
241-AN-105	90Y	Supernatant	8.32E+01	Ci	C		g/mL	2227	kL		uCi/g	Jan 1 2001 12:00AM
241-AN-105	93mNb	Salt Cake	2.52E+01	Ci	TS	1.58	g/mL	1925	kL	9.15E-03	uCi/g	Jan 1 2001 12:00AM
241-AN-105	93mNb	Supernatant	1.59E+01	Ci	TE	1.6	g/mL	2227	kL	5.92E-03	uCi/g	Jan 1 2001 12:00AM
241-AN-105	93Zr	Salt Cake	3.14E+01	Ci	TS	1.58	g/mL	1925	kL	1.14E-02	uCi/g	Jan 1 2001 12:00AM
241-AN-105	93Zr	Supernatant	1.98E+01	Ci	TE	1.6	g/mL	2227	kL	7.37E-03	uCi/g	Jan 1 2001 12:00AM
241-AN-105	99Tc	Salt Cake	5.34E+02	Ci	S	1.57	g/mL	1925	kL	1.77E-01	uCi/g	Jan 1 2001 12:00AM
241-AN-105	99Tc	Supernatant	5.88E+02	Ci	S	1.42	g/mL	2227	kL	1.86E-01	uCi/g	Jan 1 2001 12:00AM
241-AN-105	Ag	Supernatant	3.96E+01	kg	S	1.42	g/mL	2227	kL	1.25E+01	ug/g	Jan 1 2001 12:00AM
241-AN-105	Ag	Salt Cake	5.79E+01	kg	S	1.57	g/mL	1925	kL	1.92E+01	ug/g	Jan 1 2001 12:00AM
241-AN-105	Al	Supernatant	9.28E+04	kg	S	1.42	g/mL	2227	kL	2.93E+04	ug/g	Jan 1 2001 12:00AM
241-AN-105	Al	Salt Cake	6.76E+04	kg	S	1.57	g/mL	1925	kL	2.24E+04	ug/g	Jan 1 2001 12:00AM
241-AN-105	As	Salt Cake	1.18E+02	kg	S	1.57	g/mL	1925	kL	3.92E+01	ug/g	Jan 1 2001 12:00AM
241-AN-105	As	Supernatant	1.09E+02	kg	S	1.42	g/mL	2227	kL	3.45E+01	ug/g	Jan 1 2001 12:00AM
241-AN-105	B	Supernatant	1.66E+02	kg	S	1.42	g/mL	2227	kL	5.24E+01	ug/g	Jan 1 2001 12:00AM
241-AN-105	B	Salt Cake	2.74E+02	kg	S	1.57	g/mL	1925	kL	9.06E+01	ug/g	Jan 1 2001 12:00AM
241-AN-105	Ba	Supernatant	5.47E+01	kg	S	1.42	g/mL	2227	kL	1.73E+01	ug/g	Jan 1 2001 12:00AM
241-AN-105	Ba	Salt Cake	5.92E+01	kg	S	1.57	g/mL	1925	kL	1.96E+01	ug/g	Jan 1 2001 12:00AM
241-AN-105	Be	Supernatant	5.44E+00	kg	S	1.42	g/mL	2227	kL	1.72E+00	ug/g	Jan 1 2001 12:00AM
241-AN-105	Be	Salt Cake	5.92E+00	kg	S	1.57	g/mL	1925	kL	1.96E+00	ug/g	Jan 1 2001 12:00AM
241-AN-105	Bi	Salt Cake	1.18E+02	kg	S	1.57	g/mL	1925	kL	3.92E+01	ug/g	Jan 1 2001 12:00AM
241-AN-105	Bi	Supernatant	1.09E+02	kg	S	1.42	g/mL	2227	kL	3.45E+01	ug/g	Jan 1 2001 12:00AM
241-AN-105	Ca	Salt Cake	1.85E+03	kg	S	1.57	g/mL	1925	kL	6.13E+02	ug/g	Jan 1 2001 12:00AM
241-AN-105	Ca	Supernatant	1.09E+02	kg	S	1.42	g/mL	2227	kL	3.45E+01	ug/g	Jan 1 2001 12:00AM
241-AN-105	Cd	Supernatant	5.44E+00	kg	S	1.42	g/mL	2227	kL	1.72E+00	ug/g	Jan 1 2001 12:00AM
241-AN-105	Cd	Salt Cake	3.41E+01	kg	S	1.57	g/mL	1925	kL	1.13E+01	ug/g	Jan 1 2001 12:00AM
241-AN-105	Ce	Salt Cake	1.18E+02	kg	S	1.57	g/mL	1925	kL	3.92E+01	ug/g	Jan 1 2001 12:00AM
241-AN-105	Ce	Supernatant	1.09E+02	kg	S	1.42	g/mL	2227	kL	3.45E+01	ug/g	Jan 1 2001 12:00AM
241-AN-105	Cl	Salt Cake	1.57E+04	kg	S	1.57	g/mL	1925	kL	5.19E+03	ug/g	Jan 1 2001 12:00AM
241-AN-105	Cl	Supernatant	2.15E+04	kg	S	1.42	g/mL	2227	kL	6.79E+03	ug/g	Jan 1 2001 12:00AM
241-AN-105	Co	Supernatant	2.18E+01	kg	S	1.42	g/mL	2227	kL	6.89E+00	ug/g	Jan 1 2001 12:00AM

CALCULATION SHEET

PROJECT: RPP-WTP
JOB NO.: 24590
CALC NO.: 24590-WTP-M4C-FRP-00001
SHEET REV: 0A
SHEET NO.: 70

BY: E. Barrios
DATE: 12/04/02

SUBJECT: Updated Emissions Run Feed Vector

Tank Name	Analyte	Waste Phase	Inventory	Inventory Units	Basis	Density	Density Units	Volume	Volume Units	Concentration	Concentration Units	Decay Date
241-AN-105	Co	Salt Cake	2.37E+01	kg	S	1.57	g/mL	1925	kL	7.84E+00	ug/g	Jan 1 2001 12:00AM
241-AN-105	Cr	Salt Cake	6.84E+03	kg	S	1.57	g/mL	1925	kL	2.26E+03	ug/g	Jan 1 2001 12:00AM
241-AN-105	Cr	Supernatant	5.00E+02	kg	S	1.42	g/mL	2227	kL	1.58E+02	ug/g	Jan 1 2001 12:00AM
241-AN-105	Cu	Supernatant	1.17E+01	kg	S	1.42	g/mL	2227	kL	3.70E+00	ug/g	Jan 1 2001 12:00AM
241-AN-105	Cu	Salt Cake	2.09E+01	kg	S	1.57	g/mL	1925	kL	6.93E+00	ug/g	Jan 1 2001 12:00AM
241-AN-105	F	Salt Cake	5.45E+03	kg	S	1.57	g/mL	1925	kL	1.80E+03	ug/g	Jan 1 2001 12:00AM
241-AN-105	F	Supernatant	6.91E+02	kg	S	1.42	g/mL	2227	kL	2.18E+02	ug/g	Jan 1 2001 12:00AM
241-AN-105	Fe	Salt Cake	3.48E+02	kg	S	1.57	g/mL	1925	kL	1.15E+02	ug/g	Jan 1 2001 12:00AM
241-AN-105	Fe	Supernatant	5.47E+01	kg	S	1.42	g/mL	2227	kL	1.73E+01	ug/g	Jan 1 2001 12:00AM
241-AN-105	Hg	Salt Cake	0.00E+00	kg	TS	1.58	g/mL	1925	kL	0.00E+00	ug/g	Jan 1 2001 12:00AM
241-AN-105	Hg	Supernatant	0.00E+00	kg	TE	1.6	g/mL	2227	kL	0.00E+00	ug/g	Jan 1 2001 12:00AM
241-AN-105	K	Salt Cake	1.06E+04	kg	S	1.57	g/mL	1925	kL	3.49E+03	ug/g	Jan 1 2001 12:00AM
241-AN-105	K	Supernatant	1.46E+04	kg	S	1.42	g/mL	2227	kL	4.62E+03	ug/g	Jan 1 2001 12:00AM
241-AN-105	La	Salt Cake	5.92E+01	kg	S	1.57	g/mL	1925	kL	1.96E+01	ug/g	Jan 1 2001 12:00AM
241-AN-105	La	Supernatant	2.95E+00	kg	TE	1.6	g/mL	2227	kL	1.10E+00	ug/g	Jan 1 2001 12:00AM
241-AN-105	Li	Salt Cake	5.12E+01	kg	S	1.57	g/mL	1925	kL	1.70E+01	ug/g	Jan 1 2001 12:00AM
241-AN-105	Li	Supernatant	1.33E+01	kg	S	1.42	g/mL	2227	kL	4.20E+00	ug/g	Jan 1 2001 12:00AM
241-AN-105	Mg	Supernatant	1.09E+02	kg	S	1.42	g/mL	2227	kL	3.45E+01	ug/g	Jan 1 2001 12:00AM
241-AN-105	Mg	Salt Cake	1.18E+02	kg	S	1.57	g/mL	1925	kL	3.92E+01	ug/g	Jan 1 2001 12:00AM
241-AN-105	Mn	Salt Cake	6.15E+01	kg	S	1.57	g/mL	1925	kL	2.03E+01	ug/g	Jan 1 2001 12:00AM
241-AN-105	Mn	Supernatant	1.09E+01	kg	S	1.42	g/mL	2227	kL	3.45E+00	ug/g	Jan 1 2001 12:00AM
241-AN-105	Mo	Supernatant	2.15E+02	kg	S	1.42	g/mL	2227	kL	6.81E+01	ug/g	Jan 1 2001 12:00AM
241-AN-105	Mo	Salt Cake	1.57E+02	kg	S	1.57	g/mL	1925	kL	5.19E+01	ug/g	Jan 1 2001 12:00AM
241-AN-105	Na	Salt Cake	5.52E+05	kg	S	1.57	g/mL	1925	kL	1.83E+05	ug/g	Jan 1 2001 12:00AM
241-AN-105	Na	Supernatant	5.50E+05	kg	S	1.42	g/mL	2227	kL	1.74E+05	ug/g	Jan 1 2001 12:00AM
241-AN-105	Nd	Salt Cake	1.18E+02	kg	S	1.57	g/mL	1925	kL	3.92E+01	ug/g	Jan 1 2001 12:00AM
241-AN-105	Nd	Supernatant	1.09E+02	kg	S	1.42	g/mL	2227	kL	3.45E+01	ug/g	Jan 1 2001 12:00AM
241-AN-105	Ni	Salt Cake	1.20E+02	kg	S	1.57	g/mL	1925	kL	3.97E+01	ug/g	Jan 1 2001 12:00AM
241-AN-105	Ni	Supernatant	2.20E+01	kg	S	1.42	g/mL	2227	kL	6.96E+00	ug/g	Jan 1 2001 12:00AM
241-AN-105	NO2	Salt Cake	1.94E+05	kg	S	1.57	g/mL	1925	kL	6.44E+04	ug/g	Jan 1 2001 12:00AM
241-AN-105	NO2	Supernatant	2.64E+05	kg	S	1.42	g/mL	2227	kL	8.36E+04	ug/g	Jan 1 2001 12:00AM
241-AN-105	NO3	Salt Cake	3.43E+05	kg	S	1.57	g/mL	1925	kL	1.13E+05	ug/g	Jan 1 2001 12:00AM
241-AN-105	NO3	Supernatant	3.48E+05	kg	S	1.42	g/mL	2227	kL	1.10E+05	ug/g	Jan 1 2001 12:00AM
241-AN-105	OH	Salt Cake	7.22E+04	kg	S	1.57	g/mL	1925	kL	2.39E+04	ug/g	Jan 1 2001 12:00AM
241-AN-105	OH	Supernatant	1.33E+05	kg	S	1.47	g/mL	2227	kL	4.06E+04	ug/g	Jan 1 2001 12:00AM
241-AN-105	Oxalate	Supernatant	1.09E+03	kg	S	1.42	g/mL	2227	kL	3.44E+02	ug/g	Jan 1 2001 12:00AM
241-AN-105	Oxalate	Salt Cake	2.08E+04	kg	S	1.57	g/mL	1925	kL	6.88E+03	ug/g	Jan 1 2001 12:00AM
241-AN-105	Pb	Salt Cake	1.43E+02	kg	S	1.57	g/mL	1925	kL	4.72E+01	ug/g	Jan 1 2001 12:00AM
241-AN-105	Pb	Supernatant	1.20E+02	kg	S	1.42	g/mL	2227	kL	3.79E+01	ug/g	Jan 1 2001 12:00AM
241-AN-105	PO4	Salt Cake	2.26E+04	kg	S	1.57	g/mL	1925	kL	7.48E+03	ug/g	Jan 1 2001 12:00AM
241-AN-105	PO4	Supernatant	2.73E+03	kg	S	1.42	g/mL	2227	kL	8.63E+02	ug/g	Jan 1 2001 12:00AM
241-AN-105	Sb	Salt Cake	7.11E+01	kg	S	1.57	g/mL	1925	kL	2.35E+01	ug/g	Jan 1 2001 12:00AM
241-AN-105	Sb	Supernatant	6.55E+01	kg	S	1.42	g/mL	2227	kL	2.07E+01	ug/g	Jan 1 2001 12:00AM
241-AN-105	Se	Salt Cake	1.18E+02	kg	S	1.57	g/mL	1925	kL	3.92E+01	ug/g	Jan 1 2001 12:00AM
241-AN-105	Se	Supernatant	1.09E+02	kg	S	1.42	g/mL	2227	kL	3.45E+01	ug/g	Jan 1 2001 12:00AM
241-AN-105	Si	Salt Cake	4.19E+02	kg	S	1.57	g/mL	1925	kL	1.39E+02	ug/g	Jan 1 2001 12:00AM
241-AN-105	Si	Supernatant	4.86E+02	kg	S	1.42	g/mL	2227	kL	1.54E+02	ug/g	Jan 1 2001 12:00AM

CALCULATION SHEET

PROJECT: RPP-WTP
JOB NO.: 24590
CALC NO.: 24590-WTP-MMC-FRP-00001
SHEET REV: 0A
SHEET NO.: 71

BY: E. Berrios
DATE: 12/04/02

SUBJECT: Updated Emissions Run Feed Vector

Tank Name	Analyte	Waste Phase	Inventory	Inventory Units	Basis	Density	Density Units	Volume	Volume Units	Concentration	Concentration Units	Decay Date
241-AN-105	SO4	Salt Cake	2.22E+04	kg	S	1.57	g/mL	1925	kL	7.34E+03	ug/g	Jan 1 2001 12:00AM
241-AN-105	SO4	Supernatant	6.26E+03	kg	S	1.42	g/mL	2227	kL	1.98E+03	ug/g	Jan 1 2001 12:00AM
241-AN-105	Sr	Salt Cake	1.18E+01	kg	S	1.57	g/mL	1925	kL	3.92E+00	ug/g	Jan 1 2001 12:00AM
241-AN-105	Sr	Supernatant	2.03E-03	kg	C		g/mL	2227	kL		ug/g	Jan 1 2001 12:00AM
241-AN-105	Ta	Supernatant	7.25E+01	kg	S	1.42	g/mL	2227	kL	2.12E+01	ug/g	Jan 1 2001 12:00AM
241-AN-105	Th	Supernatant	7.25E+01	kg	S	1.42	g/mL	2227	kL	2.12E+01	ug/g	Jan 1 2001 12:00AM
241-AN-105	Ti	Supernatant	1.09E+01	kg	S	1.42	g/mL	2227	kL	3.45E+00	ug/g	Jan 1 2001 12:00AM
241-AN-105	Ti	Salt Cake	1.18E+01	kg	S	1.57	g/mL	1925	kL	3.92E+00	ug/g	Jan 1 2001 12:00AM
241-AN-105	TIC as CO3	Salt Cake	1.91E+05	kg	S	1.57	g/mL	1925	kL	6.33E+04	ug/g	Jan 1 2001 12:00AM
241-AN-105	TIC as CO3	Supernatant	3.97E+04	kg	S	1.42	g/mL	2227	kL	1.26E+04	ug/g	Jan 1 2001 12:00AM
241-AN-105	Tl	Salt Cake	2.37E+02	kg	S	1.57	g/mL	1925	kL	7.84E+01	ug/g	Jan 1 2001 12:00AM
241-AN-105	Tl	Supernatant	2.18E+02	kg	S	1.42	g/mL	2227	kL	6.89E+01	ug/g	Jan 1 2001 12:00AM
241-AN-105	UTOTAL	Salt Cake	2.63E+02	kg	S	1.57	g/mL	1925	kL	8.70E+01	ug/g	Jan 1 2001 12:00AM
241-AN-105	UTOTAL	Supernatant	7.93E+00	kg	S	1.42	g/mL	2227	kL	2.51E+00	ug/g	Jan 1 2001 12:00AM
241-AN-105	V	Salt Cake	5.92E+01	kg	S	1.57	g/mL	1925	kL	1.96E+01	ug/g	Jan 1 2001 12:00AM
241-AN-105	V	Supernatant	5.47E+01	kg	S	1.42	g/mL	2227	kL	1.73E+01	ug/g	Jan 1 2001 12:00AM
241-AN-105	Y	Supernatant	1.45E+01	kg	S	1.42	g/mL	2227	kL	4.23E+00	ug/g	Jan 1 2001 12:00AM
241-AN-105	Zn	Salt Cake	1.29E+02	kg	S	1.57	g/mL	1925	kL	4.27E+01	ug/g	Jan 1 2001 12:00AM
241-AN-105	Zn	Supernatant	6.91E+01	kg	S	1.42	g/mL	2227	kL	2.18E+01	ug/g	Jan 1 2001 12:00AM
241-AN-105	Zr	Supernatant	1.12E+01	kg	S	1.42	g/mL	2227	kL	3.55E+00	ug/g	Jan 1 2001 12:00AM
241-AN-105	Zr	Salt Cake	3.31E+01	kg	S	1.57	g/mL	1925	kL	1.10E+01	ug/g	Jan 1 2001 12:00AM
241-AN-107	106Ru	Supernatant	8.35E-05	Ci	TE	1.6	g/mL	3195	kL	3.21E-08	uCi/g	Jan 1 2001 12:00AM
241-AN-107	113mCd	Supernatant	7.59E+01	Ci	TE	1.6	g/mL	3195	kL	2.92E-02	uCi/g	Jan 1 2001 12:00AM
241-AN-107	125Sb	Supernatant	4.17E+01	Ci	TE	1.6	g/mL	3195	kL	1.60E-02	uCi/g	Jan 1 2001 12:00AM
241-AN-107	126Sn	Supernatant	3.02E+01	Ci	S	1.37	g/mL	3195	kL	7.20E-03	uCi/g	Jan 1 2001 12:00AM
241-AN-107	129I	Supernatant	3.71E-01	Ci	S	1.37	g/mL	3195	kL	8.83E-05	uCi/g	Jan 1 2001 12:00AM
241-AN-107	134Cs	Supernatant	1.05E+00	Ci	TE	1.6	g/mL	3195	kL	4.03E-04	uCi/g	Jan 1 2001 12:00AM
241-AN-107	137Cs	Supernatant	1.07E+06	Ci	S	1.37	g/mL	3195	kL	2.54E+02	uCi/g	Jan 1 2001 12:00AM
241-AN-107	137mBa	Supernatant	1.01E+06	Ci	C		g/mL	3195	kL		uCi/g	Jan 1 2001 12:00AM
241-AN-107	14C	Supernatant	1.26E+00	Ci	S	1.37	g/mL	3195	kL	3.01E-04	uCi/g	Jan 1 2001 12:00AM
241-AN-107	151Sm	Supernatant	1.29E+04	Ci	TE	1.6	g/mL	3195	kL	4.97E+00	uCi/g	Jan 1 2001 12:00AM
241-AN-107	152Eu	Supernatant	3.90E+00	Ci	TE	1.6	g/mL	3195	kL	1.50E-03	uCi/g	Jan 1 2001 12:00AM
241-AN-107	154Eu	Supernatant	2.46E+03	Ci	S	1.37	g/mL	3195	kL	5.87E-01	uCi/g	Jan 1 2001 12:00AM
241-AN-107	155Eu	Supernatant	1.50E+03	Ci	S	1.37	g/mL	3195	kL	3.57E-01	uCi/g	Jan 1 2001 12:00AM
241-AN-107	226Ra	Supernatant	1.56E-04	Ci	TE	1.6	g/mL	3195	kL	5.99E-08	uCi/g	Jan 1 2001 12:00AM
241-AN-107	227Ac	Supernatant	1.59E-03	Ci	TE	1.6	g/mL	3195	kL	6.12E-07	uCi/g	Jan 1 2001 12:00AM
241-AN-107	228Ra	Supernatant	1.88E-01	Ci	TE	1.6	g/mL	3195	kL	7.22E-05	uCi/g	Jan 1 2001 12:00AM
241-AN-107	229Th	Supernatant	7.96E-03	Ci	TE	1.6	g/mL	3195	kL	3.06E-06	uCi/g	Jan 1 2001 12:00AM
241-AN-107	231Pa	Supernatant	4.29E-03	Ci	TE	1.6	g/mL	3195	kL	1.65E-06	uCi/g	Jan 1 2001 12:00AM
241-AN-107	232Th	Supernatant	4.18E-02	Ci	TE	1.6	g/mL	3195	kL	1.61E-05	uCi/g	Jan 1 2001 12:00AM
241-AN-107	232U	Supernatant	2.53E-01	Ci	C	1.37	g/mL	3195	kL	6.03E-05	uCi/g	Jan 1 2001 12:00AM
241-AN-107	233U	Supernatant	1.04E+00	Ci	C	1.37	g/mL	3195	kL	2.47E-04	uCi/g	Jan 1 2001 12:00AM
241-AN-107	234U	Supernatant	1.33E-01	Ci	C	1.37	g/mL	3195	kL	3.16E-05	uCi/g	Jan 1 2001 12:00AM
241-AN-107	235U	Supernatant	5.15E-03	Ci	C	1.37	g/mL	3195	kL	1.23E-06	uCi/g	Jan 1 2001 12:00AM
241-AN-107	236U	Supernatant	4.69E-03	Ci	C	1.37	g/mL	3195	kL	1.12E-06	uCi/g	Jan 1 2001 12:00AM
241-AN-107	237Np	Supernatant	1.84E-01	Ci	S	1.42	g/mL	3195	kL	4.23E-05	uCi/g	Jan 1 2001 12:00AM
241-AN-107	238Pu	Supernatant	5.27E+00	Ci	C	1.37	g/mL	3195	kL	1.24E-03	uCi/g	Jan 1 2001 12:00AM

CALCULATION SHEET

PROJECT: RPP-WTP
JOB NO.: 24590
CALC NO.: 24590-WTP-M4C-FRP-00001
SHEET REV: 0A
SHEET NO.: 72

BY: E. Barrios
DATE: 12/04/02

SUBJECT: Updated Emissions Run Feed Vector

Tank Name	Analyte	Waste Phase	Inventory	Inventory Units	Basis	Density	Density Units	Volume	Volume Units	Concentration	Concentration Units	Decay Date
241-AN-107	238U	Supernatant	1.14E-01	Ci	C	1.37	g/mL	3195	kL	2.73E-05	uCi/g	Jan 1 2001 12:00AM
241-AN-107	239Pu	Supernatant	1.74E+02	Ci	C	1.37	g/mL	3195	kL	4.11E-02	uCi/g	Jan 1 2001 12:00AM
241-AN-107	240Pu	Supernatant	3.08E+01	Ci	C	1.37	g/mL	3195	kL	7.25E-03	uCi/g	Jan 1 2001 12:00AM
241-AN-107	241Am	Supernatant	2.47E+03	Ci	S	1.37	g/mL	3195	kL	5.89E-01	uCi/g	Jan 1 2001 12:00AM
241-AN-107	241Pu	Supernatant	2.85E+02	Ci	C	1.37	g/mL	3195	kL	6.72E-02	uCi/g	Jan 1 2001 12:00AM
241-AN-107	242Cm	Supernatant	6.23E+00	Ci	C	1.37	g/mL	3195	kL	1.48E-03	uCi/g	Jan 1 2001 12:00AM
241-AN-107	242Pu	Supernatant	2.14E-03	Ci	C	1.37	g/mL	3195	kL	5.03E-07	uCi/g	Jan 1 2001 12:00AM
241-AN-107	243Am	Supernatant	1.01E-01	Ci	C	1.37	g/mL	3195	kL	2.40E-05	uCi/g	Jan 1 2001 12:00AM
241-AN-107	243Cm	Supernatant	5.18E-01	Ci	C	1.37	g/mL	3195	kL	1.23E-04	uCi/g	Jan 1 2001 12:00AM
241-AN-107	244Cm	Supernatant	3.60E+00	Ci	C	1.37	g/mL	3195	kL	8.59E-04	uCi/g	Jan 1 2001 12:00AM
241-AN-107	3H	Supernatant	2.43E+00	Ci	S	1.37	g/mL	3195	kL	5.80E-04	uCi/g	Jan 1 2001 12:00AM
241-AN-107	59Ni	Supernatant	8.41E-01	Ci	TE	1.6	g/mL	3195	kL	3.23E-04	uCi/g	Jan 1 2001 12:00AM
241-AN-107	60Co	Supernatant	4.04E+02	Ci	S	1.37	g/mL	3195	kL	9.63E-02	uCi/g	Jan 1 2001 12:00AM
241-AN-107	63Ni	Supernatant	7.93E+01	Ci	TE	1.6	g/mL	3195	kL	3.05E-02	uCi/g	Jan 1 2001 12:00AM
241-AN-107	79Se	Supernatant	2.58E+00	Ci	S	1.37	g/mL	3195	kL	6.15E-04	uCi/g	Jan 1 2001 12:00AM
241-AN-107	90Sr	Supernatant	3.02E+05	Ci	S	1.37	g/mL	3195	kL	7.20E+01	uCi/g	Jan 1 2001 12:00AM
241-AN-107	90Y	Supernatant	3.02E+05	Ci	C		g/mL	3195	kL		uCi/g	Jan 1 2001 12:00AM
241-AN-107	93mNb	Supernatant	1.54E+01	Ci	TE	1.6	g/mL	3195	kL	5.92E-03	uCi/g	Jan 1 2001 12:00AM
241-AN-107	93Zr	Supernatant	1.92E+01	Ci	TE	1.6	g/mL	3195	kL	7.37E-03	uCi/g	Jan 1 2001 12:00AM
241-AN-107	99Tc	Supernatant	2.60E+02	Ci	S	1.37	g/mL	3195	kL	6.19E-02	uCi/g	Jan 1 2001 12:00AM
241-AN-107	Ag	Supernatant	6.13E+00	kg	S	1.42	g/mL	3195	kL	1.41E+00	ug/g	Jan 1 2001 12:00AM
241-AN-107	Al	Supernatant	9.07E+02	kg	S	1.37	g/mL	3195	kL	2.18E+02	ug/g	Jan 1 2001 12:00AM
241-AN-107	As	Supernatant	1.55E+02	kg	S	1.37	g/mL	3195	kL	3.69E+01	ug/g	Jan 1 2001 12:00AM
241-AN-107	B	Supernatant	9.13E+01	kg	S	1.37	g/mL	3195	kL	2.20E+01	ug/g	Jan 1 2001 12:00AM
241-AN-107	Ba	Supernatant	1.93E+01	kg	S	1.42	g/mL	3195	kL	4.44E+00	ug/g	Jan 1 2001 12:00AM
241-AN-107	Be	Supernatant	3.06E+00	kg	S	1.42	g/mL	3195	kL	7.04E-01	ug/g	Jan 1 2001 12:00AM
241-AN-107	Bi	Supernatant	2.76E+01	kg	S	1.42	g/mL	3195	kL	6.34E+00	ug/g	Jan 1 2001 12:00AM
241-AN-107	Ca	Supernatant	2.04E+03	kg	S	1.37	g/mL	3195	kL	4.91E+02	ug/g	Jan 1 2001 12:00AM
241-AN-107	Cd	Supernatant	2.29E+02	kg	S	1.37	g/mL	3195	kL	5.50E+01	ug/g	Jan 1 2001 12:00AM
241-AN-107	Ce	Supernatant	1.87E+02	kg	S	1.37	g/mL	3195	kL	4.50E+01	ug/g	Jan 1 2001 12:00AM
241-AN-107	Cl	Supernatant	7.85E+03	kg	S	1.37	g/mL	3195	kL	1.89E+03	ug/g	Jan 1 2001 12:00AM
241-AN-107	CN	Supernatant	1.60E+01	kg	S	1.37	g/mL	3195	kL	3.85E+00	ug/g	Jan 1 2001 12:00AM
241-AN-107	Co	Supernatant	1.38E+01	kg	S	1.42	g/mL	3195	kL	3.17E+00	ug/g	Jan 1 2001 12:00AM
241-AN-107	Cr	Supernatant	5.90E+02	kg	S	1.37	g/mL	3195	kL	1.42E+02	ug/g	Jan 1 2001 12:00AM
241-AN-107	Cu	Supernatant	1.05E+02	kg	S	1.37	g/mL	3195	kL	2.52E+01	ug/g	Jan 1 2001 12:00AM
241-AN-107	F	Supernatant	2.48E+04	kg	S	1.37	g/mL	3195	kL	5.96E+03	ug/g	Jan 1 2001 12:00AM
241-AN-107	Fe	Supernatant	5.81E+03	kg	S	1.37	g/mL	3195	kL	1.40E+03	ug/g	Jan 1 2001 12:00AM
241-AN-107	Hg	Supernatant	0.00E+00	kg	TE	1.6	g/mL	3195	kL	0.00E+00	ug/g	Jan 1 2001 12:00AM
241-AN-107	K	Supernatant	6.53E+03	kg	S	1.37	g/mL	3195	kL	1.57E+03	ug/g	Jan 1 2001 12:00AM
241-AN-107	La	Supernatant	1.22E+02	kg	S	1.37	g/mL	3195	kL	2.93E+01	ug/g	Jan 1 2001 12:00AM
241-AN-107	Li	Supernatant	9.19E+00	kg	S	1.42	g/mL	3195	kL	2.11E+00	ug/g	Jan 1 2001 12:00AM
241-AN-107	Mg	Supernatant	2.76E+01	kg	S	1.42	g/mL	3195	kL	6.34E+00	ug/g	Jan 1 2001 12:00AM
241-AN-107	Mn	Supernatant	2.00E+03	kg	S	1.37	g/mL	3195	kL	4.81E+02	ug/g	Jan 1 2001 12:00AM
241-AN-107	Mo	Supernatant	1.27E+02	kg	S	1.37	g/mL	3195	kL	3.05E+01	ug/g	Jan 1 2001 12:00AM
241-AN-107	Na	Supernatant	7.28E+05	kg	B	1.37	g/mL	3195	kL	1.66E+05	ug/g	Jan 1 2001 12:00AM
241-AN-107	Nd	Supernatant	3.53E+02	kg	S	1.37	g/mL	3195	kL	8.50E+01	ug/g	Jan 1 2001 12:00AM
241-AN-107	NH3	Supernatant	1.56E+02	kg	S	1.37	g/mL	3195	kL	3.71E+01	ug/g	Jan 1 2001 12:00AM

CALCULATION SHEET

PROJECT: RPP-WTP
JOB NO.: 24590
CALC NO.: 24590-WTP-M4C-FRP-00001
SHEET REV: 0A
SHEET NO.: 73

BY: E. Barrios
DATE: 12/04/02

SUBJECT: Updated Emissions Run Feed Vector

Tank Name	Analyte	Waste Phase	Inventory	Inventory Units	Basis	Density	Density Units	Volume	Volume Units	Concentration	Concentration Units	Decay Date
241-AN-107	Ni	Supernatant	1.93E+03	kg	S	1.37	g/mL	3195	kL	4.65E+02	ug/g	Jan 1 2001 12:00AM
241-AN-107	NO2	Supernatant	1.99E+05	kg	S	1.37	g/mL	3195	kL	4.79E+04	ug/g	Jan 1 2001 12:00AM
241-AN-107	NO3	Supernatant	6.87E+05	kg	S	1.37	g/mL	3195	kL	1.65E+05	ug/g	Jan 1 2001 12:00AM
241-AN-107	OH	Supernatant	3.87E+04	kg	E	1.37	g/mL	3195	kL	8.83E+03	ug/g	Jan 1 2001 12:00AM
241-AN-107	Pb	Supernatant	1.34E+03	kg	S	1.37	g/mL	3195	kL	3.23E+02	ug/g	Jan 1 2001 12:00AM
241-AN-107	PO4	Supernatant	5.34E+03	kg	S	1.37	g/mL	3195	kL	1.29E+03	ug/g	Jan 1 2001 12:00AM
241-AN-107	Rh	Supernatant	8.27E+01	kg	S	1.42	g/mL	3195	kL	1.90E+01	ug/g	Jan 1 2001 12:00AM
241-AN-107	Sb	Supernatant	1.02E+00	kg	S	1.37	g/mL	3195	kL	2.44E-01	ug/g	Jan 1 2001 12:00AM
241-AN-107	Se	Supernatant	6.89E+01	kg	S	1.42	g/mL	3195	kL	1.58E+01	ug/g	Jan 1 2001 12:00AM
241-AN-107	Si	Supernatant	9.13E+01	kg	S	1.37	g/mL	3195	kL	2.20E+01	ug/g	Jan 1 2001 12:00AM
241-AN-107	SO4	Supernatant	3.09E+04	kg	S	1.37	g/mL	3195	kL	7.45E+03	ug/g	Jan 1 2001 12:00AM
241-AN-107	Sr	Supernatant	9.19E+00	kg	S	1.42	g/mL	3195	kL	2.11E+00	ug/g	Jan 1 2001 12:00AM
241-AN-107	Ta	Supernatant	7.75E+01	kg	S	1.37	g/mL	3195	kL	1.85E+01	ug/g	Jan 1 2001 12:00AM
241-AN-107	Ti	Supernatant	1.55E+01	kg	S	1.37	g/mL	3195	kL	3.69E+00	ug/g	Jan 1 2001 12:00AM
241-AN-107	TIC as CO3	Supernatant	2.08E+05	kg	S	1.37	g/mL	3195	kL	5.02E+04	ug/g	Jan 1 2001 12:00AM
241-AN-107	Tl	Supernatant	3.98E-01	kg	S	1.37	g/mL	3195	kL	9.49E-02	ug/g	Jan 1 2001 12:00AM
241-AN-107	TOC	Supernatant	1.24E+05	kg	S	1.37	g/mL	3195	kL	2.99E+04	ug/g	Jan 1 2001 12:00AM
241-AN-107	UTOTAL	Supernatant	3.43E+02	kg	S	1.37	g/mL	3195	kL	8.18E+01	ug/g	Jan 1 2001 12:00AM
241-AN-107	V	Supernatant	1.38E-01	kg	S	1.42	g/mL	3195	kL	3.17E+00	ug/g	Jan 1 2001 12:00AM
241-AN-107	W	Supernatant	5.19E+02	kg	S	1.37	g/mL	3195	kL	1.25E+02	ug/g	Jan 1 2001 12:00AM
241-AN-107	Y	Supernatant	2.60E+01	kg	S	1.42	g/mL	3195	kL	5.99E+00	ug/g	Jan 1 2001 12:00AM
241-AN-107	Zn	Supernatant	6.99E+01	kg	S	1.37	g/mL	3195	kL	1.68E+01	ug/g	Jan 1 2001 12:00AM
241-AN-107	Zr	Supernatant	2.45E+02	kg	S	1.37	g/mL	3195	kL	5.91E+01	ug/g	Jan 1 2001 12:00AM
241-AP-101	106Ru	Supernatant	1.16E-04	Ci	TE	1.6	g/mL	4216	kL	3.21E-08	uCi/g	Jan 1 2001 12:00AM
241-AP-101	113mCd	Supernatant	1.05E+02	Ci	TE	1.6	g/mL	4216	kL	2.92E-02	uCi/g	Jan 1 2001 12:00AM
241-AP-101	125Sb	Supernatant	2.12E+02	Ci	S	1.31	g/mL	4216	kL	3.84E-02	uCi/g	Jan 1 2001 12:00AM
241-AP-101	126Sn	Supernatant	3.57E+00	Ci	S	1.31	g/mL	4216	kL	6.47E-04	uCi/g	Jan 1 2001 12:00AM
241-AP-101	129I	Supernatant	3.39E-01	Ci	S	1.31	g/mL	4216	kL	6.15E-05	uCi/g	Jan 1 2001 12:00AM
241-AP-101	134Cs	Supernatant	1.57E+02	Ci	S	1.31	g/mL	4216	kL	2.85E-02	uCi/g	Jan 1 2001 12:00AM
241-AP-101	137Cs	Supernatant	5.97E+05	Ci	S	1.31	g/mL	4216	kL	1.08E+02	uCi/g	Jan 1 2001 12:00AM
241-AP-101	137mBa	Supernatant	5.65E+05	Ci	C		g/mL	4216	kL		uCi/g	Jan 1 2001 12:00AM
241-AP-101	14C	Supernatant	1.11E+00	Ci	S	1.31	g/mL	4216	kL	2.01E-04	uCi/g	Jan 1 2001 12:00AM
241-AP-101	151Sm	Supernatant	1.79E+04	Ci	TE	1.6	g/mL	4216	kL	4.97E+00	uCi/g	Jan 1 2001 12:00AM
241-AP-101	152Eu	Supernatant	8.13E+00	Ci	S	1.31	g/mL	4216	kL	1.47E-03	uCi/g	Jan 1 2001 12:00AM
241-AP-101	154Eu	Supernatant	7.97E+00	Ci	S	1.31	g/mL	4216	kL	1.44E-03	uCi/g	Jan 1 2001 12:00AM
241-AP-101	155Eu	Supernatant	4.91E+00	Ci	E	1.31	g/mL	4216	kL	8.89E-04	uCi/g	Jan 1 2001 12:00AM
241-AP-101	226Ra	Supernatant	2.16E-04	Ci	TE	1.6	g/mL	4216	kL	5.99E-08	uCi/g	Jan 1 2001 12:00AM
241-AP-101	227Ac	Supernatant	1.27E-03	Ci	TE	1.6	g/mL	4216	kL	3.52E-07	uCi/g	Jan 1 2001 12:00AM
241-AP-101	228Ra	Supernatant	4.75E-01	Ci	TE	1.6	g/mL	4216	kL	1.32E-04	uCi/g	Jan 1 2001 12:00AM
241-AP-101	229Th	Supernatant	1.10E-02	Ci	TE	1.6	g/mL	4216	kL	3.06E-06	uCi/g	Jan 1 2001 12:00AM
241-AP-101	231Pa	Supernatant	5.94E-03	Ci	TE	1.6	g/mL	4216	kL	1.65E-06	uCi/g	Jan 1 2001 12:00AM
241-AP-101	232Th	Supernatant	5.79E-02	Ci	TE	1.6	g/mL	4216	kL	1.61E-05	uCi/g	Jan 1 2001 12:00AM
241-AP-101	232U	Supernatant	6.21E-02	Ci	E	1.31	g/mL	4216	kL	1.12E-05	uCi/g	Jan 1 2001 12:00AM
241-AP-101	233U	Supernatant	2.55E-01	Ci	E	1.31	g/mL	4216	kL	4.62E-05	uCi/g	Jan 1 2001 12:00AM
241-AP-101	234U	Supernatant	8.64E-02	Ci	E	1.31	g/mL	4216	kL	1.56E-05	uCi/g	Jan 1 2001 12:00AM
241-AP-101	235U	Supernatant	3.56E-03	Ci	E	1.31	g/mL	4216	kL	6.44E-07	uCi/g	Jan 1 2001 12:00AM
241-AP-101	236U	Supernatant	3.02E-03	Ci	E	1.31	g/mL	4216	kL	5.47E-07	uCi/g	Jan 1 2001 12:00AM

CALCULATION SHEET

PROJECT: RPP-WTP
JOB NO.: 24590
CALC NO.: 24590-WTP-M4C-FRP-00001
SHEET REV: 04
SHEET NO.: 74

BY: E. Berrios
DATE: 12/04/02

SUBJECT: Updated Emissions Run Feed Vector

Tank Name	Analyte	Waste Phase	Inventory	Inventory Units	Basis	Density	Density Units	Volume	Volume Units	Concentration	Concentration Units	Decay Date
241-AP-101	237Np	Supernatant	2.29E-02	Ci	S	1.31	g/mL	4216	kL	4.15E-06	uCi/g	Jan 1 2001 12:00AM
241-AP-101	238Pu	Supernatant	6.16E-02	Ci	S	1.31	g/mL	4216	kL	1.12E-05	uCi/g	Jan 1 2001 12:00AM
241-AP-101	238U	Supernatant	7.80E-02	Ci	E	1.31	g/mL	4216	kL	1.41E-05	uCi/g	Jan 1 2001 12:00AM
241-AP-101	239Pu	Supernatant	4.55E-01	Ci	E	1.31	g/mL	4216	kL	8.24E-05	uCi/g	Jan 1 2001 12:00AM
241-AP-101	240Pu	Supernatant	7.67E-02	Ci	E	1.31	g/mL	4216	kL	1.39E-05	uCi/g	Jan 1 2001 12:00AM
241-AP-101	241Am	Supernatant	7.11E-01	Ci	E	1.31	g/mL	4216	kL	1.29E-04	uCi/g	Jan 1 2001 12:00AM
241-AP-101	241Pu	Supernatant	7.90E-01	Ci	E	1.31	g/mL	4216	kL	1.43E-04	uCi/g	Jan 1 2001 12:00AM
241-AP-101	242Cm	Supernatant	1.63E-06	Ci	E	1.31	g/mL	4216	kL	2.95E-10	uCi/g	Jan 1 2001 12:00AM
241-AP-101	242Pu	Supernatant	6.96E-06	Ci	E	1.31	g/mL	4216	kL	1.26E-09	uCi/g	Jan 1 2001 12:00AM
241-AP-101	243Am	Supernatant	3.55E-05	Ci	E	1.31	g/mL	4216	kL	6.42E-09	uCi/g	Jan 1 2001 12:00AM
241-AP-101	243Cm	Supernatant	1.47E-04	Ci	E	1.31	g/mL	4216	kL	2.65E-08	uCi/g	Jan 1 2001 12:00AM
241-AP-101	244Cm	Supernatant	3.19E-03	Ci	E	1.31	g/mL	4216	kL	5.77E-07	uCi/g	Jan 1 2001 12:00AM
241-AP-101	3H	Supernatant	1.96E+01	Ci	S	1.31	g/mL	4216	kL	3.54E-03	uCi/g	Jan 1 2001 12:00AM
241-AP-101	59Ni	Supernatant	1.16E+00	Ci	TE	1.6	g/mL	4216	kL	3.23E-04	uCi/g	Jan 1 2001 12:00AM
241-AP-101	60Co	Supernatant	1.26E+01	Ci	S	1.31	g/mL	4216	kL	2.29E-03	uCi/g	Jan 1 2001 12:00AM
241-AP-101	63Ni	Supernatant	1.10E+02	Ci	TE	1.6	g/mL	4216	kL	3.05E-02	uCi/g	Jan 1 2001 12:00AM
241-AP-101	79Se	Supernatant	2.45E-01	Ci	S	1.31	g/mL	4216	kL	4.44E-05	uCi/g	Jan 1 2001 12:00AM
241-AP-101	90Sr	Supernatant	3.62E+02	Ci	S	1.31	g/mL	4216	kL	6.56E-02	uCi/g	Jan 1 2001 12:00AM
241-AP-101	90Y	Supernatant	3.62E+02	Ci	C		g/mL	4216	kL		uCi/g	Jan 1 2001 12:00AM
241-AP-101	93m2Nb	Supernatant	1.91E+01	Ci	TE	1.6	g/mL	4216	kL	5.29E-03	uCi/g	Jan 1 2001 12:00AM
241-AP-101	93Zr	Supernatant	2.66E+01	Ci	TE	1.6	g/mL	4216	kL	7.37E-03	uCi/g	Jan 1 2001 12:00AM
241-AP-101	99Tc	Supernatant	1.99E+02	Ci	S	1.31	g/mL	4216	kL	3.60E-02	uCi/g	Jan 1 2001 12:00AM
241-AP-101	Ag	Supernatant	2.66E+00	kg	S	1.31	g/mL	4216	kL	4.81E-01	ug/g	Jan 1 2001 12:00AM
241-AP-101	Ag	Supernatant	2.66E+00	kg	S	1.31	g/mL	4216	kL	4.81E-01	ug/g	Jan 1 2001 12:00AM
241-AP-101	Al	Supernatant	2.93E+04	kg	S	1.31	g/mL	4216	kL	5.30E+03	ug/g	Jan 1 2001 12:00AM
241-AP-101	As	Supernatant	5.31E+00	kg	S	1.31	g/mL	4216	kL	9.62E-01	ug/g	Jan 1 2001 12:00AM
241-AP-101	As	Supernatant	5.31E+00	kg	S	1.31	g/mL	4216	kL	9.62E-01	ug/g	Jan 1 2001 12:00AM
241-AP-101	B	Supernatant	6.75E+01	kg	S	1.31	g/mL	4216	kL	1.22E+01	ug/g	Jan 1 2001 12:00AM
241-AP-101	B	Supernatant	6.75E+01	kg	S	1.31	g/mL	4216	kL	1.22E+01	ug/g	Jan 1 2001 12:00AM
241-AP-101	Ba	Supernatant	1.39E+00	kg	S	1.31	g/mL	4216	kL	2.52E-01	ug/g	Jan 1 2001 12:00AM
241-AP-101	Ba	Supernatant	1.39E+00	kg	S	1.31	g/mL	4216	kL	2.52E-01	ug/g	Jan 1 2001 12:00AM
241-AP-101	Be	Supernatant	5.57E+00	kg	S	1.31	g/mL	4216	kL	1.01E+00	ug/g	Jan 1 2001 12:00AM
241-AP-101	Be	Supernatant	5.57E+00	kg	S	1.31	g/mL	4216	kL	1.01E+00	ug/g	Jan 1 2001 12:00AM
241-AP-101	Bi	Supernatant	1.05E+01	kg	S	1.31	g/mL	4216	kL	1.91E+00	ug/g	Jan 1 2001 12:00AM
241-AP-101	Ca	Supernatant	3.25E+01	kg	S	1.31	g/mL	4216	kL	5.88E+00	ug/g	Jan 1 2001 12:00AM
241-AP-101	Cd	Supernatant	8.43E+00	kg	S	1.31	g/mL	4216	kL	1.53E+00	ug/g	Jan 1 2001 12:00AM
241-AP-101	Cd	Supernatant	8.43E+00	kg	S	1.31	g/mL	4216	kL	1.53E+00	ug/g	Jan 1 2001 12:00AM
241-AP-101	Ce	Supernatant	3.15E-01	kg	S	1.31	g/mL	4216	kL	5.70E-02	ug/g	Jan 1 2001 12:00AM
241-AP-101	Ce	Supernatant	3.15E-01	kg	S	1.31	g/mL	4216	kL	5.70E-02	ug/g	Jan 1 2001 12:00AM
241-AP-101	Cl	Supernatant	8.35E+03	kg	S	1.31	g/mL	4216	kL	1.51E+03	ug/g	Jan 1 2001 12:00AM
241-AP-101	CN	Supernatant	2.40E+01	kg	S	1.31	g/mL	4216	kL	4.35E+00	ug/g	Jan 1 2001 12:00AM
241-AP-101	CN	Supernatant	2.40E+01	kg	S	1.31	g/mL	4216	kL	4.35E+00	ug/g	Jan 1 2001 12:00AM
241-AP-101	Co	Supernatant	1.48E+00	kg	S	1.31	g/mL	4216	kL	2.69E-01	ug/g	Jan 1 2001 12:00AM
241-AP-101	Co	Supernatant	1.48E+00	kg	S	1.31	g/mL	4216	kL	2.69E-01	ug/g	Jan 1 2001 12:00AM
241-AP-101	Cr	Supernatant	6.03E+02	kg	S	1.31	g/mL	4216	kL	1.09E+02	ug/g	Jan 1 2001 12:00AM
241-AP-101	Cu	Supernatant	6.75E+00	kg	S	1.31	g/mL	4216	kL	1.22E+00	ug/g	Jan 1 2001 12:00AM
241-AP-101	Cu	Supernatant	6.75E+00	kg	S	1.31	g/mL	4216	kL	1.22E+00	ug/g	Jan 1 2001 12:00AM

CALCULATION SHEET

PROJECT: RPP-WTP
JOB NO.: 24590
CALC NO.: 24590-WTP-M4C-FRP-00001
SHEET REV: 0A
SHEET NO.: 75

BY: E. Barrios
DATE: 12/04/02

SUBJECT: Updated Emissions Run Feed Vector

Tank Name	Analyte	Waste Phase	Inventory	Inventory Units	Basis	Density	Density Units	Volume	Volume Units	Concentration	Concentration Units	Decay Date
241-AP-101	F	Supernatant	1.22E+04	kg	S	1.31	g/mL	4216	kL	2.21E+03	ug/g	Jan 1 2001 12:00AM
241-AP-101	Fe	Supernatant	1.05E+01	kg	S	1.31	g/mL	4216	kL	1.91E+00	ug/g	Jan 1 2001 12:00AM
241-AP-101	Hg	Supernatant	0.00E+00	kg	TE	1.6	g/mL	4216	kL	0.00E+00	ug/g	Jan 1 2001 12:00AM
241-AP-101	K	Supernatant	1.32E+05	kg	S	1.31	g/mL	4216	kL	2.38E+04	ug/g	Jan 1 2001 12:00AM
241-AP-101	La	Supernatant	5.48E+00	kg	S	1.31	g/mL	4216	kL	9.92E-01	ug/g	Jan 1 2001 12:00AM
241-AP-101	Li	Supernatant	1.43E+00	kg	S	1.31	g/mL	4216	kL	2.60E-01	ug/g	Jan 1 2001 12:00AM
241-AP-101	Li	Supernatant	1.43E+00	kg	S	1.31	g/mL	4216	kL	2.60E-01	ug/g	Jan 1 2001 12:00AM
241-AP-101	Mg	Supernatant	1.05E+01	kg	S	1.31	g/mL	4216	kL	1.91E+00	ug/g	Jan 1 2001 12:00AM
241-AP-101	Mg	Supernatant	1.05E+01	kg	S	1.31	g/mL	4216	kL	1.91E+00	ug/g	Jan 1 2001 12:00AM
241-AP-101	Mn	Supernatant	5.48E+00	kg	S	1.31	g/mL	4216	kL	9.92E-01	ug/g	Jan 1 2001 12:00AM
241-AP-101	Mo	Supernatant	6.11E+01	kg	S	1.31	g/mL	4216	kL	1.11E+01	ug/g	Jan 1 2001 12:00AM
241-AP-101	Mo	Supernatant	6.11E+01	kg	S	1.31	g/mL	4216	kL	1.11E+01	ug/g	Jan 1 2001 12:00AM
241-AP-101	Na	Supernatant	5.45E+05	kg	S	1.31	g/mL	4216	kL	9.87E+04	ug/g	Jan 1 2001 12:00AM
241-AP-101	Nd	Supernatant	1.05E+01	kg	S	1.31	g/mL	4216	kL	1.91E+00	ug/g	Jan 1 2001 12:00AM
241-AP-101	Nd	Supernatant	1.05E+01	kg	S	1.31	g/mL	4216	kL	1.91E+00	ug/g	Jan 1 2001 12:00AM
241-AP-101	NH3	Supernatant	7.21E+00	kg	S	1.31	g/mL	4216	kL	1.31E+00	ug/g	Jan 1 2001 12:00AM
241-AP-101	NH3	Supernatant	7.21E+00	kg	S	1.31	g/mL	4216	kL	1.31E+00	ug/g	Jan 1 2001 12:00AM
241-AP-101	Ni	Supernatant	3.33E+01	kg	S	1.31	g/mL	4216	kL	6.03E+00	ug/g	Jan 1 2001 12:00AM
241-AP-101	NO2	Supernatant	1.77E+05	kg	S	1.31	g/mL	4216	kL	3.20E+04	ug/g	Jan 1 2001 12:00AM
241-AP-101	NO3	Supernatant	5.57E+05	kg	S	1.31	g/mL	4216	kL	1.01E+05	ug/g	Jan 1 2001 12:00AM
241-AP-101	OH	Supernatant	1.74E+05	kg	S	1.31	g/mL	4216	kL	3.15E+04	ug/g	Jan 1 2001 12:00AM
241-AP-101	Oxalate	Supernatant	7.59E+03	kg	S	1.31	g/mL	4216	kL	1.37E+03	ug/g	Jan 1 2001 12:00AM
241-AP-101	Oxalate	Supernatant	7.59E+03	kg	S	1.31	g/mL	4216	kL	1.37E+03	ug/g	Jan 1 2001 12:00AM
241-AP-101	Pb	Supernatant	6.32E+01	kg	S	1.31	g/mL	4216	kL	1.15E+01	ug/g	Jan 1 2001 12:00AM
241-AP-101	PO4	Supernatant	4.06E+03	kg	S	1.31	g/mL	4216	kL	7.35E+02	ug/g	Jan 1 2001 12:00AM
241-AP-101	Pr	Supernatant	7.29E-02	kg	S	1.31	g/mL	4216	kL	1.32E-02	ug/g	Jan 1 2001 12:00AM
241-AP-101	Pr	Supernatant	7.29E-02	kg	S	1.31	g/mL	4216	kL	1.32E-02	ug/g	Jan 1 2001 12:00AM
241-AP-101	Rb	Supernatant	1.67E+01	kg	S	1.31	g/mL	4216	kL	3.03E+00	ug/g	Jan 1 2001 12:00AM
241-AP-101	Rb	Supernatant	1.67E+01	kg	S	1.31	g/mL	4216	kL	3.03E+00	ug/g	Jan 1 2001 12:00AM
241-AP-101	Sb	Supernatant	1.77E-01	kg	S	1.31	g/mL	4216	kL	3.21E-02	ug/g	Jan 1 2001 12:00AM
241-AP-101	Sb	Supernatant	1.77E-01	kg	S	1.31	g/mL	4216	kL	3.21E-02	ug/g	Jan 1 2001 12:00AM
241-AP-101	Se	Supernatant	9.70E+00	kg	S	1.31	g/mL	4216	kL	1.76E+00	ug/g	Jan 1 2001 12:00AM
241-AP-101	Se	Supernatant	9.70E+00	kg	S	1.31	g/mL	4216	kL	1.76E+00	ug/g	Jan 1 2001 12:00AM
241-AP-101	Si	Supernatant	5.78E+02	kg	S	1.31	g/mL	4216	kL	1.05E+02	ug/g	Jan 1 2001 12:00AM
241-AP-101	SO4	Supernatant	1.70E+04	kg	S	1.31	g/mL	4216	kL	3.08E+03	ug/g	Jan 1 2001 12:00AM
241-AP-101	Sr	Supernatant	1.60E+00	kg	S	1.31	g/mL	4216	kL	2.90E-01	ug/g	Jan 1 2001 12:00AM
241-AP-101	Ta	Supernatant	3.75E-01	kg	S	1.31	g/mL	4216	kL	6.79E-02	ug/g	Jan 1 2001 12:00AM
241-AP-101	Ta	Supernatant	3.75E-01	kg	S	1.31	g/mL	4216	kL	6.79E-02	ug/g	Jan 1 2001 12:00AM
241-AP-101	Th	Supernatant	4.64E-02	kg	S	1.31	g/mL	4216	kL	8.40E-03	ug/g	Jan 1 2001 12:00AM
241-AP-101	Th	Supernatant	4.64E-02	kg	S	1.31	g/mL	4216	kL	8.40E-03	ug/g	Jan 1 2001 12:00AM
241-AP-101	Ti	Supernatant	2.66E+00	kg	S	1.31	g/mL	4216	kL	4.81E-01	ug/g	Jan 1 2001 12:00AM
241-AP-101	Ti	Supernatant	2.66E+00	kg	S	1.31	g/mL	4216	kL	4.81E-01	ug/g	Jan 1 2001 12:00AM
241-AP-101	TIC as CO3	Supernatant	1.36E+05	kg	S	1.31	g/mL	4216	kL	2.47E+04	ug/g	Jan 1 2001 12:00AM
241-AP-101	Tl	Supernatant	7.59E-02	kg	S	1.31	g/mL	4216	kL	1.37E-02	ug/g	Jan 1 2001 12:00AM
241-AP-101	Tl	Supernatant	7.59E-02	kg	S	1.31	g/mL	4216	kL	1.37E-02	ug/g	Jan 1 2001 12:00AM
241-AP-101	UTOTAL	Supernatant	2.33E+02	kg	S	1.31	g/mL	4216	kL	4.22E+01	ug/g	Jan 1 2001 12:00AM
241-AP-101	V	Supernatant	3.15E+00	kg	S	1.31	g/mL	4216	kL	5.70E-01	ug/g	Jan 1 2001 12:00AM

CALCULATION SHEET

PROJECT: RPP-WTP
JOB NO.: 24590
CALC NO.: 24590-WTP-M4C-FRP-00001
SHEET REV: 06
SHEET NO.: 78

BY: E. Berrios
DATE: 12/04/02

SUBJECT: Updated Emissions Run Feed Vector

Tank Name	Analyte	Waste Phase	Inventory	Inventory Units	Basis	Density	Density Units	Volume	Volume Units	Concentration	Concentration Units	Decay Date
241-AP-101	V	Supernatant	3.15E+00	kg	S	1.31	g/mL	4216	kL	5.70E-01	ug/g	Jan 1 2001 12:00AM
241-AP-101	W	Supernatant	1.21E+02	kg	S	1.31	g/mL	4216	kL	2.18E+01	ug/g	Jan 1 2001 12:00AM
241-AP-101	W	Supernatant	1.21E+02	kg	S	1.31	g/mL	4216	kL	2.18E+01	ug/g	Jan 1 2001 12:00AM
241-AP-101	Zn	Supernatant	2.36E+01	kg	S	1.31	g/mL	4216	kL	4.27E+00	ug/g	Jan 1 2001 12:00AM
241-AP-101	Zn	Supernatant	2.36E+01	kg	S	1.31	g/mL	4216	kL	4.27E+00	ug/g	Jan 1 2001 12:00AM
241-AP-101	Zr	Supernatant	5.90E+00	kg	S	1.31	g/mL	4216	kL	1.07E+00	ug/g	Jan 1 2001 12:00AM
241-AP-104	106Ru	Supernatant	7.59E-05	Ci	E	1.25	g/mL	4195	kL	1.45E-08	uCi/g	Jan 1 2001 12:00AM
241-AP-104	113mCd	Supernatant	9.08E+01	Ci	E	1.25	g/mL	4195	kL	1.73E-02	uCi/g	Jan 1 2001 12:00AM
241-AP-104	125Sb	Supernatant	4.23E+01	Ci	E	1.25	g/mL	4195	kL	8.06E-03	uCi/g	Jan 1 2001 12:00AM
241-AP-104	126Sn	Supernatant	3.04E+00	Ci	E	1.25	g/mL	4195	kL	5.79E-04	uCi/g	Jan 1 2001 12:00AM
241-AP-104	129I	Supernatant	5.82E-01	Ci	S	1.28	g/mL	4195	kL	1.08E-04	uCi/g	Jan 1 2001 12:00AM
241-AP-104	134Cs	Supernatant	9.25E-01	Ci	E	1.25	g/mL	4195	kL	1.76E-04	uCi/g	Jan 1 2001 12:00AM
241-AP-104	137Cs	Supernatant	8.94E+05	Ci	S	1.28	g/mL	4195	kL	1.66E+02	uCi/g	Jan 1 2001 12:00AM
241-AP-104	137mBa	Supernatant	8.46E+05	Ci	C		g/mL	4195	kL		uCi/g	Jan 1 2001 12:00AM
241-AP-104	14C	Supernatant	2.66E+00	Ci	S	1.28	g/mL	4195	kL	4.96E-04	uCi/g	Jan 1 2001 12:00AM
241-AP-104	151Sm	Supernatant	1.68E+04	Ci	E	1.25	g/mL	4195	kL	3.20E+00	uCi/g	Jan 1 2001 12:00AM
241-AP-104	152Eu	Supernatant	4.17E+00	Ci	E	1.25	g/mL	4195	kL	7.95E-04	uCi/g	Jan 1 2001 12:00AM
241-AP-104	154Eu	Supernatant	1.80E+02	Ci	E	1.25	g/mL	4195	kL	3.43E-02	uCi/g	Jan 1 2001 12:00AM
241-AP-104	155Eu	Supernatant	6.24E+01	Ci	E	1.25	g/mL	4195	kL	1.19E-02	uCi/g	Jan 1 2001 12:00AM
241-AP-104	226Ra	Supernatant	2.39E-04	Ci	E	1.25	g/mL	4195	kL	4.55E-08	uCi/g	Jan 1 2001 12:00AM
241-AP-104	227Ac	Supernatant	1.16E-03	Ci	E	1.25	g/mL	4195	kL	2.21E-07	uCi/g	Jan 1 2001 12:00AM
241-AP-104	228Ra	Supernatant	8.57E-02	Ci	E	1.25	g/mL	4195	kL	1.63E-05	uCi/g	Jan 1 2001 12:00AM
241-AP-104	229Th	Supernatant	3.85E-03	Ci	E	1.25	g/mL	4195	kL	7.35E-07	uCi/g	Jan 1 2001 12:00AM
241-AP-104	231Pa	Supernatant	6.21E-03	Ci	E	1.25	g/mL	4195	kL	1.18E-06	uCi/g	Jan 1 2001 12:00AM
241-AP-104	232Th	Supernatant	1.16E-04	Ci	S	1.28	g/mL	4195	kL	2.16E-08	uCi/g	Jan 1 2001 12:00AM
241-AP-104	232U	Supernatant	1.27E-02	Ci	E	1.28	g/mL	4195	kL	2.37E-06	uCi/g	Jan 1 2001 12:00AM
241-AP-104	233U	Supernatant	5.23E-02	Ci	E	1.28	g/mL	4195	kL	9.74E-06	uCi/g	Jan 1 2001 12:00AM
241-AP-104	234U	Supernatant	1.63E-02	Ci	E	1.28	g/mL	4195	kL	3.03E-06	uCi/g	Jan 1 2001 12:00AM
241-AP-104	235U	Supernatant	6.63E-04	Ci	E	1.28	g/mL	4195	kL	1.23E-07	uCi/g	Jan 1 2001 12:00AM
241-AP-104	236U	Supernatant	5.33E-04	Ci	E	1.28	g/mL	4195	kL	9.92E-08	uCi/g	Jan 1 2001 12:00AM
241-AP-104	237Np	Supernatant	7.47E-01	Ci	S	1.28	g/mL	4195	kL	1.39E-04	uCi/g	Jan 1 2001 12:00AM
241-AP-104	238Pu	Supernatant	2.38E-02	Ci	E	1.28	g/mL	4195	kL	4.43E-06	uCi/g	Jan 1 2001 12:00AM
241-AP-104	238U	Supernatant	1.47E-02	Ci	E	1.28	g/mL	4195	kL	2.74E-06	uCi/g	Jan 1 2001 12:00AM
241-AP-104	239Pu	Supernatant	7.31E-01	Ci	E	1.28	g/mL	4195	kL	1.36E-04	uCi/g	Jan 1 2001 12:00AM
241-AP-104	240Pu	Supernatant	1.24E-01	Ci	E	1.28	g/mL	4195	kL	2.31E-05	uCi/g	Jan 1 2001 12:00AM
241-AP-104	241Am	Supernatant	1.18E+01	Ci	E	1.28	g/mL	4195	kL	2.19E-03	uCi/g	Jan 1 2001 12:00AM
241-AP-104	241Pu	Supernatant	1.04E+00	Ci	E	1.28	g/mL	4195	kL	1.94E-04	uCi/g	Jan 1 2001 12:00AM
241-AP-104	242Cm	Supernatant	3.70E-02	Ci	E	1.28	g/mL	4195	kL	6.89E-06	uCi/g	Jan 1 2001 12:00AM
241-AP-104	242Pu	Supernatant	8.05E-06	Ci	E	1.28	g/mL	4195	kL	1.50E-09	uCi/g	Jan 1 2001 12:00AM
241-AP-104	243Am	Supernatant	4.20E-04	Ci	E	1.28	g/mL	4195	kL	7.81E-08	uCi/g	Jan 1 2001 12:00AM
241-AP-104	243Cm	Supernatant	1.49E-02	Ci	E	1.28	g/mL	4195	kL	2.78E-06	uCi/g	Jan 1 2001 12:00AM
241-AP-104	244Cm	Supernatant	3.27E-01	Ci	E	1.28	g/mL	4195	kL	6.09E-05	uCi/g	Jan 1 2001 12:00AM
241-AP-104	3H	Supernatant	2.78E+00	Ci	S	1.28	g/mL	4195	kL	5.18E-04	uCi/g	Jan 1 2001 12:00AM
241-AP-104	59Ni	Supernatant	1.86E+00	Ci	E	1.25	g/mL	4195	kL	3.55E-04	uCi/g	Jan 1 2001 12:00AM
241-AP-104	60Co	Supernatant	2.77E+01	Ci	E	1.25	g/mL	4195	kL	5.29E-03	uCi/g	Jan 1 2001 12:00AM
241-AP-104	63Ni	Supernatant	1.79E+02	Ci	E	1.25	g/mL	4195	kL	3.41E-02	uCi/g	Jan 1 2001 12:00AM
241-AP-104	79Se	Supernatant	3.16E+00	Ci	S	1.28	g/mL	4195	kL	5.88E-04	uCi/g	Jan 1 2001 12:00AM

CALCULATION SHEET

PROJECT: RPP-WTP
JOB NO.: 24590
CALC NO.: 24590-WTP-M4C-FRP-00001
SHEET REV: 0A
SHEET NO.: 77

BY: E. Berrios
DATE: 12/04/02

SUBJECT: Updated Emissions Run Feed Vector

Tank Name	Analyte	Waste Phase	Inventory	Inventory Units	Basis	Density	Density Units	Volume	Volume Units	Concentration	Concentration Units	Decay Date
241-AP-104	90Sr	Supernatant	7.76E+03	Ci	S	1.28	g/mL	4195	kL	1.44E+00	uCi/g	Jan 1 2001 12:00AM
241-AP-104	90Y	Supernatant	7.76E+03	Ci	C		g/mL	4195	kL		uCi/g	Jan 1 2001 12:00AM
241-AP-104	93mNb	Supernatant	1.55E+01	Ci	E	1.25	g/mL	4195	kL	2.95E-03	uCi/g	Jan 1 2001 12:00AM
241-AP-104	93Zr	Supernatant	1.88E+01	Ci	E	1.25	g/mL	4195	kL	3.58E-03	uCi/g	Jan 1 2001 12:00AM
241-AP-104	99Tc	Supernatant	7.09E+02	Ci	S	1.28	g/mL	4195	kL	1.32E-01	uCi/g	Jan 1 2001 12:00AM
241-AP-104	Ag	Supernatant	1.05E+01	kg	S	1.28	g/mL	4195	kL	1.95E+00	ug/g	Jan 1 2001 12:00AM
241-AP-104	Al	Supernatant	6.11E+04	kg	S	1.28	g/mL	4195	kL	1.14E+04	ug/g	Jan 1 2001 12:00AM
241-AP-104	As	Supernatant	7.26E+00	kg	S	1.28	g/mL	4195	kL	1.35E+00	ug/g	Jan 1 2001 12:00AM
241-AP-104	B	Supernatant	1.73E+02	kg	S	1.28	g/mL	4195	kL	3.22E+01	ug/g	Jan 1 2001 12:00AM
241-AP-104	Ba	Supernatant	2.52E-01	kg	S	1.28	g/mL	4195	kL	4.69E-02	ug/g	Jan 1 2001 12:00AM
241-AP-104	Be	Supernatant	5.10E-01	kg	S	1.28	g/mL	4195	kL	9.51E-02	ug/g	Jan 1 2001 12:00AM
241-AP-104	Bi	Supernatant	1.05E+02	kg	S	1.28	g/mL	4195	kL	1.95E+01	ug/g	Jan 1 2001 12:00AM
241-AP-104	Ca	Supernatant	2.36E+02	kg	S	1.28	g/mL	4195	kL	4.40E+01	ug/g	Jan 1 2001 12:00AM
241-AP-104	Cd	Supernatant	5.24E+00	kg	S	1.28	g/mL	4195	kL	9.77E-01	ug/g	Jan 1 2001 12:00AM
241-AP-104	Ce	Supernatant	2.46E-01	kg	S	1.28	g/mL	4195	kL	4.57E-02	ug/g	Jan 1 2001 12:00AM
241-AP-104	Cl	Supernatant	2.44E+04	kg	S	1.28	g/mL	4195	kL	4.54E+03	ug/g	Jan 1 2001 12:00AM
241-AP-104	CN	Supernatant	1.09E+02	kg	S	1.28	g/mL	4195	kL	2.04E+01	ug/g	Jan 1 2001 12:00AM
241-AP-104	Co	Supernatant	2.89E+00	kg	S	1.28	g/mL	4195	kL	5.38E-01	ug/g	Jan 1 2001 12:00AM
241-AP-104	Cr	Supernatant	1.98E+03	kg	S	1.28	g/mL	4195	kL	3.68E+02	ug/g	Jan 1 2001 12:00AM
241-AP-104	Cu	Supernatant	1.06E+01	kg	S	1.28	g/mL	4195	kL	1.97E+00	ug/g	Jan 1 2001 12:00AM
241-AP-104	F	Supernatant	5.13E+02	kg	S	1.28	g/mL	4195	kL	9.55E+01	ug/g	Jan 1 2001 12:00AM
241-AP-104	Fe	Supernatant	5.24E+01	kg	S	1.28	g/mL	4195	kL	9.77E+00	ug/g	Jan 1 2001 12:00AM
241-AP-104	Hg	Supernatant	0.00E+00	kg	E	1	g/mL	4195	kL	0.00E+00	ug/g	Jan 1 2001 12:00AM
241-AP-104	K	Supernatant	8.39E+03	kg	S	1.28	g/mL	4195	kL	1.56E+03	ug/g	Jan 1 2001 12:00AM
241-AP-104	La	Supernatant	4.17E-01	kg	S	1.28	g/mL	4195	kL	7.76E-02	ug/g	Jan 1 2001 12:00AM
241-AP-104	Li	Supernatant	8.39E-02	kg	S	1.28	g/mL	4195	kL	1.56E-02	ug/g	Jan 1 2001 12:00AM
241-AP-104	Mg	Supernatant	1.05E+02	kg	S	1.28	g/mL	4195	kL	1.95E+01	ug/g	Jan 1 2001 12:00AM
241-AP-104	Mn	Supernatant	1.05E+01	kg	S	1.28	g/mL	4195	kL	1.95E+00	ug/g	Jan 1 2001 12:00AM
241-AP-104	Mo	Supernatant	2.36E+02	kg	S	1.28	g/mL	4195	kL	4.40E+01	ug/g	Jan 1 2001 12:00AM
241-AP-104	Na	Supernatant	5.52E+05	kg	S	1.28	g/mL	4195	kL	1.03E+05	ug/g	Jan 1 2001 12:00AM
241-AP-104	Nd	Supernatant	1.05E+02	kg	S	1.28	g/mL	4195	kL	1.95E+01	ug/g	Jan 1 2001 12:00AM
241-AP-104	Ni	Supernatant	1.69E+02	kg	S	1.28	g/mL	4195	kL	3.14E+01	ug/g	Jan 1 2001 12:00AM
241-AP-104	NO2	Supernatant	3.03E+05	kg	S	1.28	g/mL	4195	kL	5.64E+04	ug/g	Jan 1 2001 12:00AM
241-AP-104	NO3	Supernatant	4.77E+05	kg	S	1.28	g/mL	4195	kL	8.89E+04	ug/g	Jan 1 2001 12:00AM
241-AP-104	OH	Supernatant	8.64E+04	kg	S	1.28	g/mL	4195	kL	1.61E+04	ug/g	Jan 1 2001 12:00AM
241-AP-104	Pb	Supernatant	1.05E+02	kg	S	1.28	g/mL	4195	kL	1.95E+01	ug/g	Jan 1 2001 12:00AM
241-AP-104	PO4	Supernatant	1.92E+04	kg	S	1.28	g/mL	4195	kL	3.58E+03	ug/g	Jan 1 2001 12:00AM
241-AP-104	Pr	Supernatant	7.13E-01	kg	S	1.28	g/mL	4195	kL	1.33E-01	ug/g	Jan 1 2001 12:00AM
241-AP-104	Rb	Supernatant	1.18E+01	kg	S	1.28	g/mL	4195	kL	2.20E+00	ug/g	Jan 1 2001 12:00AM
241-AP-104	Rh	Supernatant	2.28E+01	kg	S	1.28	g/mL	4195	kL	4.26E+00	ug/g	Jan 1 2001 12:00AM
241-AP-104	Ru	Supernatant	9.00E+01	kg	S	1.28	g/mL	4195	kL	1.68E+01	ug/g	Jan 1 2001 12:00AM
241-AP-104	Sb	Supernatant	1.12E-01	kg	S	1.28	g/mL	4195	kL	2.08E-02	ug/g	Jan 1 2001 12:00AM
241-AP-104	Se	Supernatant	2.85E+01	kg	S	1.28	g/mL	4195	kL	5.31E+00	ug/g	Jan 1 2001 12:00AM
241-AP-104	Si	Supernatant	1.94E+02	kg	S	1.28	g/mL	4195	kL	3.61E+01	ug/g	Jan 1 2001 12:00AM
241-AP-104	SO4	Supernatant	1.40E+04	kg	S	1.28	g/mL	4195	kL	2.60E+03	ug/g	Jan 1 2001 12:00AM
241-AP-104	Sr	Supernatant	1.05E+01	kg	S	1.28	g/mL	4195	kL	1.95E+00	ug/g	Jan 1 2001 12:00AM
241-AP-104	Ta	Supernatant	1.44E-01	kg	S	1.28	g/mL	4195	kL	2.68E-02	ug/g	Jan 1 2001 12:00AM

CALCULATION SHEET

PROJECT: RPP-WTP
JOB NO : 24590
CALC NO. 24590-WTP-MEC-ERP-00001
SHEET REV: 0A
SHEET NO.: 28

BY: E. Berrios
DATE: 12/04/03

SUBJECT: Updated Emissions Run Feed Vector

Tank Name	Analyte	Waste Phase	Inventory	Inventory Units	Basis	Density	Density Units	Volume	Volume Units	Concentration	Concentration Units	Decay Date
241-AP-104	Tc	Supernatant	7.13E-01	kg	S	1.28	g/mL	4195	kL	1.33E-01	ug/g	Jan 1 2001 12:00AM
241-AP-104	Th	Supernatant	1.06E+00	kg	S	1.28	g/mL	4195	kL	1.98E-01	ug/g	Jan 1 2001 12:00AM
241-AP-104	Ti	Supernatant	1.05E+01	kg	S	1.28	g/mL	4195	kL	1.95E+00	ug/g	Jan 1 2001 12:00AM
241-AP-104	TIC as CO3	Supernatant	7.10E+04	kg	S	1.28	g/mL	4195	kL	1.32E+04	ug/g	Jan 1 2001 12:00AM
241-AP-104	Tl	Supernatant	2.10E-01	kg	S	1.28	g/mL	4195	kL	3.91E-02	ug/g	Jan 1 2001 12:00AM
241-AP-104	UTOTAL	Supernatant	4.36E+01	kg	S	1.28	g/mL	4195	kL	8.11E+00	ug/g	Jan 1 2001 12:00AM
241-AP-104	V	Supernatant	5.24E+01	kg	S	1.28	g/mL	4195	kL	9.77E+00	ug/g	Jan 1 2001 12:00AM
241-AP-104	W	Supernatant	3.75E+02	kg	S	1.28	g/mL	4195	kL	6.98E+01	ug/g	Jan 1 2001 12:00AM
241-AP-104	Y	Supernatant	1.05E+01	kg	S	1.28	g/mL	4195	kL	1.95E+00	ug/g	Jan 1 2001 12:00AM
241-AP-104	Zn	Supernatant	1.05E+01	kg	S	1.28	g/mL	4195	kL	1.95E+00	ug/g	Jan 1 2001 12:00AM
241-AP-104	Zr	Supernatant	1.05E+01	kg	S	1.28	g/mL	4195	kL	1.95E+00	ug/g	Jan 1 2001 12:00AM
241-AW-101	106Ru	Salt Cake	1.02E-04	Ci	TS	1.58	g/mL	1403	kL	4.97E-08	uCi/g	Jan 1 2001 12:00AM
241-AW-101	106Ru	Supernatant	1.15E-04	Ci	TE	1.6	g/mL	2768	kL	3.21E-08	uCi/g	Jan 1 2001 12:00AM
241-AW-101	113mCd	Salt Cake	9.27E+01	Ci	TS	1.58	g/mL	1403	kL	4.52E-02	uCi/g	Jan 1 2001 12:00AM
241-AW-101	113mCd	Supernatant	1.05E+02	Ci	TE	1.6	g/mL	2768	kL	2.92E-02	uCi/g	Jan 1 2001 12:00AM
241-AW-101	125Sb	Salt Cake	5.09E+01	Ci	TS	1.58	g/mL	1403	kL	2.48E-02	uCi/g	Jan 1 2001 12:00AM
241-AW-101	125Sb	Supernatant	5.75E+01	Ci	TE	1.6	g/mL	2768	kL	1.60E-02	uCi/g	Jan 1 2001 12:00AM
241-AW-101	126Sn	Salt Cake	2.87E+00	Ci	TS	1.58	g/mL	1403	kL	1.40E-03	uCi/g	Jan 1 2001 12:00AM
241-AW-101	126Sn	Supernatant	3.23E+00	Ci	TE	1.6	g/mL	2768	kL	9.02E-04	uCi/g	Jan 1 2001 12:00AM
241-AW-101	129I	Salt Cake	2.30E-01	Ci	TS	1.58	g/mL	1403	kL	1.12E-04	uCi/g	Jan 1 2001 12:00AM
241-AW-101	129I	Supernatant	9.02E-01	Ci	S	1.47	g/mL	2768	kL	2.22E-04	uCi/g	Jan 1 2001 12:00AM
241-AW-101	134Cs	Salt Cake	2.22E-01	Ci	TS	1.58	g/mL	1403	kL	1.08E-04	uCi/g	Jan 1 2001 12:00AM
241-AW-101	134Cs	Supernatant	1.35E+02	Ci	S	1.48	g/mL	2768	kL	3.31E-02	uCi/g	Jan 1 2001 12:00AM
241-AW-101	137Cs	Salt Cake	5.09E+05	Ci	S	1.59	g/mL	1403	kL	2.28E+02	uCi/g	Jan 1 2001 12:00AM
241-AW-101	137Cs	Supernatant	1.21E+06	Ci	S	1.47	g/mL	2768	kL	2.98E+02	uCi/g	Jan 1 2001 12:00AM
241-AW-101	137mBa	Salt Cake	4.81E+05	Ci	C		g/mL	1403	kL		uCi/g	Jan 1 2001 12:00AM
241-AW-101	137mBa	Supernatant	1.15E+06	Ci	C		g/mL	2768	kL		uCi/g	Jan 1 2001 12:00AM
241-AW-101	14C	Salt Cake	3.86E+01	Ci	TS	1.58	g/mL	1403	kL	1.88E-02	uCi/g	Jan 1 2001 12:00AM
241-AW-101	14C	Supernatant	8.36E-01	Ci	S	1.47	g/mL	2768	kL	2.05E-04	uCi/g	Jan 1 2001 12:00AM
241-AW-101	151Sm	Salt Cake	1.58E+04	Ci	TS	1.58	g/mL	1403	kL	7.69E+00	uCi/g	Jan 1 2001 12:00AM
241-AW-101	151Sm	Supernatant	1.78E+04	Ci	TE	1.6	g/mL	2768	kL	4.97E+00	uCi/g	Jan 1 2001 12:00AM
241-AW-101	152Eu	Salt Cake	4.77E+00	Ci	TS	1.58	g/mL	1403	kL	2.32E-03	uCi/g	Jan 1 2001 12:00AM
241-AW-101	152Eu	Supernatant	5.38E+00	Ci	TE	1.6	g/mL	2768	kL	1.50E-03	uCi/g	Jan 1 2001 12:00AM
241-AW-101	154Eu	Salt Cake	1.65E+02	Ci	S	1.59	g/mL	1403	kL	7.40E-02	uCi/g	Jan 1 2001 12:00AM
241-AW-101	154Eu	Supernatant	8.31E+01	Ci	S	1.47	g/mL	2768	kL	2.04E-02	uCi/g	Jan 1 2001 12:00AM
241-AW-101	155Eu	Salt Cake	6.09E+02	Ci	S	1.59	g/mL	1403	kL	2.73E-01	uCi/g	Jan 1 2001 12:00AM
241-AW-101	155Eu	Supernatant	1.68E+02	Ci	TE	1.6	g/mL	2768	kL	4.70E-02	uCi/g	Jan 1 2001 12:00AM
241-AW-101	226Ra	Salt Cake	1.91E-04	Ci	TS	1.58	g/mL	1403	kL	9.28E-08	uCi/g	Jan 1 2001 12:00AM
241-AW-101	226Ra	Supernatant	2.15E-04	Ci	TE	1.6	g/mL	2768	kL	5.99E-08	uCi/g	Jan 1 2001 12:00AM
241-AW-101	227Ac	Salt Cake	1.94E-03	Ci	TS	1.58	g/mL	1403	kL	9.46E-07	uCi/g	Jan 1 2001 12:00AM
241-AW-101	227Ac	Supernatant	2.19E-03	Ci	TE	1.6	g/mL	2768	kL	6.12E-07	uCi/g	Jan 1 2001 12:00AM
241-AW-101	228Ra	Salt Cake	2.29E-01	Ci	TS	1.58	g/mL	1403	kL	1.12E-04	uCi/g	Jan 1 2001 12:00AM
241-AW-101	228Ra	Supernatant	2.29E-01	Ci	TE	1.6	g/mL	2768	kL	6.39E-05	uCi/g	Jan 1 2001 12:00AM
241-AW-101	229Th	Salt Cake	9.72E-03	Ci	TS	1.58	g/mL	1403	kL	4.74E-06	uCi/g	Jan 1 2001 12:00AM
241-AW-101	229Th	Supernatant	1.10E-02	Ci	TE	1.6	g/mL	2768	kL	3.06E-06	uCi/g	Jan 1 2001 12:00AM
241-AW-101	231Pa	Salt Cake	5.23E-03	Ci	TS	1.58	g/mL	1403	kL	2.55E-06	uCi/g	Jan 1 2001 12:00AM
241-AW-101	231Pa	Supernatant	5.91E-03	Ci	TE	1.6	g/mL	2768	kL	1.65E-06	uCi/g	Jan 1 2001 12:00AM

CALCULATION SHEET

PROJECT: RPP-WTP
JOB NO.: 24590
CALC NO.: 24590-WTP-MMC-FRP-00001
SHEET REV: 0A
SHEET NO.: 79

BY: E. Berrios
DATE: 12/04/02

SUBJECT: Updated Emissions Run Feed Vector

Tank Name	Analyte	Waste Phase	Inventory	Inventory Units	Basis	Density	Density Units	Volume	Volume Units	Concentration	Concentration Units	Decay Date
241-AW-101	232Th	Supernatant	2.52E-04	Ci	S	1.47	g/mL	2768	kL	6.18E-08	uCi/g	Jan 1 2001 12:00AM
241-AW-101	232Th	Salt Cake	5.11E-02	Ci	TS	1.58	g/mL	1403	kL	2.49E-05	uCi/g	Jan 1 2001 12:00AM
241-AW-101	232U	Salt Cake	5.06E-01	Ci	C	1.59	g/mL	1403	kL	2.27E-04	uCi/g	Jan 1 2001 12:00AM
241-AW-101	232U	Supernatant	1.84E-03	Ci	C	1.48	g/mL	2768	kL	4.49E-07	uCi/g	Jan 1 2001 12:00AM
241-AW-101	233U	Salt Cake	2.07E+00	Ci	C	1.59	g/mL	1403	kL	9.29E-04	uCi/g	Jan 1 2001 12:00AM
241-AW-101	233U	Supernatant	7.54E-03	Ci	C	1.48	g/mL	2768	kL	1.84E-06	uCi/g	Jan 1 2001 12:00AM
241-AW-101	234U	Salt Cake	1.21E+00	Ci	C	1.59	g/mL	1403	kL	5.42E-04	uCi/g	Jan 1 2001 12:00AM
241-AW-101	234U	Supernatant	4.40E-03	Ci	C	1.48	g/mL	2768	kL	1.07E-06	uCi/g	Jan 1 2001 12:00AM
241-AW-101	235U	Salt Cake	4.65E-02	Ci	C	1.59	g/mL	1403	kL	2.08E-05	uCi/g	Jan 1 2001 12:00AM
241-AW-101	235U	Supernatant	1.69E-04	Ci	C	1.48	g/mL	2768	kL	4.13E-08	uCi/g	Jan 1 2001 12:00AM
241-AW-101	236U	Salt Cake	1.40E-01	Ci	S	1.59	g/mL	1403	kL	6.29E-05	uCi/g	Jan 1 2001 12:00AM
241-AW-101	236U	Supernatant	3.04E-04	Ci	C	1.48	g/mL	2768	kL	7.42E-08	uCi/g	Jan 1 2001 12:00AM
241-AW-101	237Np	Salt Cake	4.21E-01	Ci	TS	1.58	g/mL	1403	kL	2.05E-04	uCi/g	Jan 1 2001 12:00AM
241-AW-101	237Np	Supernatant	1.02E-01	Ci	S	1.47	g/mL	2768	kL	2.52E-05	uCi/g	Jan 1 2001 12:00AM
241-AW-101	238Pu	Salt Cake	1.46E+01	Ci	S	1.59	g/mL	1403	kL	6.55E-03	uCi/g	Jan 1 2001 12:00AM
241-AW-101	238Pu	Supernatant	1.35E-01	Ci	S	1.48	g/mL	2768	kL	3.30E-05	uCi/g	Jan 1 2001 12:00AM
241-AW-101	238U	Salt Cake	8.97E-01	Ci	S	1.59	g/mL	1403	kL	4.02E-04	uCi/g	Jan 1 2001 12:00AM
241-AW-101	238U	Supernatant	3.26E-03	Ci	C	1.48	g/mL	2768	kL	7.95E-07	uCi/g	Jan 1 2001 12:00AM
241-AW-101	239Pu	Salt Cake	9.81E+01	Ci	C	1.59	g/mL	1403	kL	4.40E-02	uCi/g	Jan 1 2001 12:00AM
241-AW-101	239Pu	Supernatant	1.12E+00	Ci	C	1.48	g/mL	2768	kL	2.72E-04	uCi/g	Jan 1 2001 12:00AM
241-AW-101	240Pu	Salt Cake	2.70E+01	Ci	C	1.59	g/mL	1403	kL	1.21E-02	uCi/g	Jan 1 2001 12:00AM
241-AW-101	240Pu	Supernatant	3.07E-01	Ci	C	1.48	g/mL	2768	kL	7.49E-05	uCi/g	Jan 1 2001 12:00AM
241-AW-101	241Am	Salt Cake	1.03E+02	Ci	S	1.59	g/mL	1403	kL	4.63E-02	uCi/g	Jan 1 2001 12:00AM
241-AW-101	241Am	Supernatant	1.85E+00	Ci	S	1.47	g/mL	2768	kL	4.56E-04	uCi/g	Jan 1 2001 12:00AM
241-AW-101	241Pu	Salt Cake	7.15E+02	Ci	C	1.59	g/mL	1403	kL	3.20E-01	uCi/g	Jan 1 2001 12:00AM
241-AW-101	241Pu	Supernatant	8.12E+00	Ci	C	1.48	g/mL	2768	kL	1.98E-03	uCi/g	Jan 1 2001 12:00AM
241-AW-101	242Cm	Salt Cake	1.53E-01	Ci	C	1.59	g/mL	1403	kL	6.87E-05	uCi/g	Jan 1 2001 12:00AM
241-AW-101	242Cm	Supernatant	2.78E-03	Ci	C	1.47	g/mL	2768	kL	6.83E-07	uCi/g	Jan 1 2001 12:00AM
241-AW-101	242Pu	Supernatant	4.35E-05	Ci	C	1.48	g/mL	2768	kL	1.06E-08	uCi/g	Jan 1 2001 12:00AM
241-AW-101	242Pu	Salt Cake	3.83E-03	Ci	C	1.59	g/mL	1403	kL	1.72E-06	uCi/g	Jan 1 2001 12:00AM
241-AW-101	243Am	Salt Cake	7.08E-03	Ci	C	1.59	g/mL	1403	kL	3.17E-06	uCi/g	Jan 1 2001 12:00AM
241-AW-101	243Am	Supernatant	1.28E-04	Ci	C	1.47	g/mL	2768	kL	3.15E-08	uCi/g	Jan 1 2001 12:00AM
241-AW-101	243Cm	Salt Cake	7.58E-02	Ci	C		g/mL	1403	kL		uCi/g	Jan 1 2001 12:00AM
241-AW-101	243Cm	Supernatant	1.01E-03	Ci	C		g/mL	2768	kL		uCi/g	Jan 1 2001 12:00AM
241-AW-101	244Cm	Salt Cake	1.77E+00	Ci	C		g/mL	1403	kL		uCi/g	Jan 1 2001 12:00AM
241-AW-101	244Cm	Supernatant	2.35E-02	Ci	C		g/mL	2768	kL		uCi/g	Jan 1 2001 12:00AM
241-AW-101	3H	Salt Cake	1.74E+01	Ci	S	1.59	g/mL	1403	kL	7.80E-03	uCi/g	Jan 1 2001 12:00AM
241-AW-101	3H	Supernatant	1.00E+01	Ci	S	1.47	g/mL	2768	kL	2.46E-03	uCi/g	Jan 1 2001 12:00AM
241-AW-101	59Ni	Salt Cake	3.10E+00	Ci	TS	1.58	g/mL	1403	kL	1.51E-03	uCi/g	Jan 1 2001 12:00AM
241-AW-101	59Ni	Supernatant	1.16E+00	Ci	TE	1.6	g/mL	2768	kL	3.23E-04	uCi/g	Jan 1 2001 12:00AM
241-AW-101	60Co	Salt Cake	4.54E+01	Ci	S	1.59	g/mL	1403	kL	2.03E-02	uCi/g	Jan 1 2001 12:00AM
241-AW-101	60Co	Supernatant	2.17E+01	Ci	S	1.48	g/mL	2768	kL	5.30E-03	uCi/g	Jan 1 2001 12:00AM
241-AW-101	63Ni	Salt Cake	2.94E+02	Ci	TS	1.58	g/mL	1403	kL	1.43E-01	uCi/g	Jan 1 2001 12:00AM
241-AW-101	63Ni	Supernatant	1.09E+02	Ci	TE	1.6	g/mL	2768	kL	3.05E-02	uCi/g	Jan 1 2001 12:00AM
241-AW-101	79Se	Salt Cake	4.74E-01	Ci	TS	1.58	g/mL	1403	kL	2.31E-04	uCi/g	Jan 1 2001 12:00AM
241-AW-101	79Se	Supernatant	1.95E+00	Ci	S	1.47	g/mL	2768	kL	4.79E-04	uCi/g	Jan 1 2001 12:00AM
241-AW-101	90Sr	Salt Cake	8.82E+04	Ci	S	1.59	g/mL	1403	kL	3.95E+01	uCi/g	Jan 1 2001 12:00AM

CALCULATION SHEET

PROJECT: RPP-WTP
JOB NO.: 24590
CALC NO.: 24590-WTP-M4C-FRP-00001
SHEET REV: 0A
SHEET NO 80

BY: E Benlos
DATE: 12/04/02

SUBJECT: Updated Emissions Run Feed Vector

Tank Name	Analyte	Waste Phase	Inventory	Inventory Units	Basis	Density	Density Units	Volume	Volume Units	Concentration	Concentration Units	Decay Date
241-AW-101	90Sr	Supernatant	1.11E+03	Ci	S	1.47	g/mL	2768	kL	2.73E-01	uCi/g	Jan 1 2001 12:00AM
241-AW-101	90Y	Salt Cake	8.82E+04	Ci	C		g/mL	1403	kL		uCi/g	Jan 1 2001 12:00AM
241-AW-101	90Y	Supernatant	1.11E+03	Ci	C		g/mL	2768	kL		uCi/g	Jan 1 2001 12:00AM
241-AW-101	93mNb	Salt Cake	1.88E+01	Ci	TS	1.58	g/mL	1403	kL	9.15E-03	uCi/g	Jan 1 2001 12:00AM
241-AW-101	93mNb	Supernatant	2.12E+01	Ci	TE	1.6	g/mL	2768	kL	5.92E-03	uCi/g	Jan 1 2001 12:00AM
241-AW-101	93Zr	Salt Cake	2.34E+01	Ci	TS	1.58	g/mL	1403	kL	1.14E-02	uCi/g	Jan 1 2001 12:00AM
241-AW-101	93Zr	Supernatant	2.64E+01	Ci	TE	1.6	g/mL	2768	kL	7.37E-03	uCi/g	Jan 1 2001 12:00AM
241-AW-101	99Tc	Salt Cake	3.50E+02	Ci	S	1.58	g/mL	1403	kL	1.58E-01	uCi/g	Jan 1 2001 12:00AM
241-AW-101	99Tc	Supernatant	4.87E+02	Ci	S	1.47	g/mL	2768	kL	1.20E-01	uCi/g	Jan 1 2001 12:00AM
241-AW-101	Ag	Supernatant	5.54E+00	kg	S	1.48	g/mL	2768	kL	1.35E+00	ug/g	Jan 1 2001 12:00AM
241-AW-101	Ag	Salt Cake	5.68E+01	kg	S	1.59	g/mL	1403	kL	2.55E+01	ug/g	Jan 1 2001 12:00AM
241-AW-101	Al	Supernatant	9.11E+04	kg	S	1.47	g/mL	2768	kL	2.24E+04	ug/g	Jan 1 2001 12:00AM
241-AW-101	Al	Salt Cake	3.34E+04	kg	S	1.59	g/mL	1403	kL	1.50E+04	ug/g	Jan 1 2001 12:00AM
241-AW-101	As	Salt Cake	8.31E+01	kg	S	1.58	g/mL	1403	kL	3.75E+01	ug/g	Jan 1 2001 12:00AM
241-AW-101	As	Supernatant	2.59E+02	kg	S	1.47	g/mL	2768	kL	6.37E+01	ug/g	Jan 1 2001 12:00AM
241-AW-101	B	Salt Cake	2.44E+02	kg	S	1.59	g/mL	1403	kL	1.09E+02	ug/g	Jan 1 2001 12:00AM
241-AW-101	B	Supernatant	2.46E+02	kg	S	1.47	g/mL	2768	kL	6.05E+01	ug/g	Jan 1 2001 12:00AM
241-AW-101	Ba	Salt Cake	1.10E+01	kg	S	1.59	g/mL	1403	kL	4.95E+00	ug/g	Jan 1 2001 12:00AM
241-AW-101	Ba	Supernatant	2.77E+00	kg	S	1.48	g/mL	2768	kL	6.76E-01	ug/g	Jan 1 2001 12:00AM
241-AW-101	Be	Supernatant	7.47E+00	kg	S	1.48	g/mL	2768	kL	1.82E+00	ug/g	Jan 1 2001 12:00AM
241-AW-101	Be	Supernatant	7.47E+00	kg	S	1.48	g/mL	2768	kL	1.82E+00	ug/g	Jan 1 2001 12:00AM
241-AW-101	Bi	Salt Cake	2.57E+01	kg	S	1.59	g/mL	1403	kL	1.15E+01	ug/g	Jan 1 2001 12:00AM
241-AW-101	Bi	Supernatant	2.21E+01	kg	S	1.48	g/mL	2768	kL	5.41E+00	ug/g	Jan 1 2001 12:00AM
241-AW-101	Ca	Salt Cake	7.30E+02	kg	S	1.59	g/mL	1403	kL	3.27E+02	ug/g	Jan 1 2001 12:00AM
241-AW-101	Ca	Supernatant	5.67E+01	kg	S	1.48	g/mL	2768	kL	1.39E+01	ug/g	Jan 1 2001 12:00AM
241-AW-101	Cd	Salt Cake	1.67E+01	kg	S	1.59	g/mL	1403	kL	7.47E+00	ug/g	Jan 1 2001 12:00AM
241-AW-101	Cd	Supernatant	5.81E+00	kg	S	1.48	g/mL	2768	kL	1.42E+00	ug/g	Jan 1 2001 12:00AM
241-AW-101	Ce	Salt Cake	5.13E+01	kg	S	1.59	g/mL	1403	kL	2.30E+01	ug/g	Jan 1 2001 12:00AM
241-AW-101	Ce	Supernatant	1.11E+01	kg	S	1.48	g/mL	2768	kL	2.70E+00	ug/g	Jan 1 2001 12:00AM
241-AW-101	Cl	Salt Cake	7.81E+03	kg	S	1.59	g/mL	1403	kL	3.50E+03	ug/g	Jan 1 2001 12:00AM
241-AW-101	Cl	Supernatant	2.02E+04	kg	S	1.47	g/mL	2768	kL	4.97E+03	ug/g	Jan 1 2001 12:00AM
241-AW-101	Co	Supernatant	1.11E+01	kg	S	1.48	g/mL	2768	kL	2.70E+00	ug/g	Jan 1 2001 12:00AM
241-AW-101	Co	Salt Cake	1.23E+01	kg	S	1.59	g/mL	1403	kL	5.50E+00	ug/g	Jan 1 2001 12:00AM
241-AW-101	Cr	Salt Cake	8.76E+02	kg	S	1.59	g/mL	1403	kL	3.93E+02	ug/g	Jan 1 2001 12:00AM
241-AW-101	Cr	Supernatant	3.43E+02	kg	S	1.47	g/mL	2768	kL	8.44E+01	ug/g	Jan 1 2001 12:00AM
241-AW-101	Cu	Salt Cake	2.44E+01	kg	S	1.59	g/mL	1403	kL	1.09E+01	ug/g	Jan 1 2001 12:00AM
241-AW-101	Cu	Supernatant	7.47E+00	kg	S	1.48	g/mL	2768	kL	1.82E+00	ug/g	Jan 1 2001 12:00AM
241-AW-101	F	Supernatant	2.66E+03	kg	S	1.47	g/mL	2768	kL	6.54E+02	ug/g	Jan 1 2001 12:00AM
241-AW-101	F	Salt Cake	7.47E+03	kg	S	1.59	g/mL	1403	kL	3.35E+03	ug/g	Jan 1 2001 12:00AM
241-AW-101	Fe	Salt Cake	8.04E+02	kg	S	1.59	g/mL	1403	kL	3.61E+02	ug/g	Jan 1 2001 12:00AM
241-AW-101	Fe	Supernatant	2.08E+01	kg	S	1.48	g/mL	2768	kL	5.07E+00	ug/g	Jan 1 2001 12:00AM
241-AW-101	Hg	Salt Cake	0.00E+00	kg	TS	1.58	g/mL	1403	kL	0.00E+00	ug/g	Jan 1 2001 12:00AM
241-AW-101	Hg	Supernatant	0.00E+00	kg	TE	1.6	g/mL	2768	kL	0.00E+00	ug/g	Jan 1 2001 12:00AM
241-AW-101	K	Salt Cake	6.97E+04	kg	S	1.59	g/mL	1403	kL	3.12E+04	ug/g	Jan 1 2001 12:00AM
241-AW-101	K	Supernatant	9.83E+04	kg	S	1.47	g/mL	2768	kL	2.41E+04	ug/g	Jan 1 2001 12:00AM
241-AW-101	La	Salt Cake	1.23E+01	kg	S	1.59	g/mL	1403	kL	5.50E+00	ug/g	Jan 1 2001 12:00AM
241-AW-101	La	Supernatant	3.94E+00	kg	TE	1.6	g/mL	2768	kL	1.10E+00	ug/g	Jan 1 2001 12:00AM

CALCULATION SHEET

PROJECT: RPP-WTP
JOB NO.: 24590
CALC NO.: 24590-WTP-M4C-FRP-00001
SHEET REV: 0A
SHEET NO.: B1

BY: E. Berrios
DATE: 12/04/02

SUBJECT: Updated Emissions Run Feed Vector

Tank Name	Analyte	Waste Phase	Inventory	Inventory Units	Basis	Density	Density Units	Volume	Volume Units	Concentration	Concentration Units	Decay Date
241-AW-101	Li	Supernatant	6.92E+00	kg	S	1.48	g/mL	2768	kL	1.69E+00	ug/g	Jan 1 2001 12:00AM
241-AW-101	Li	Salt Cake	7.81E+00	kg	S	1.59	g/mL	1403	kL	3.50E+00	ug/g	Jan 1 2001 12:00AM
241-AW-101	Mg	Supernatant	2.21E+01	kg	S	1.48	g/mL	2768	kL	5.41E+00	ug/g	Jan 1 2001 12:00AM
241-AW-101	Mg	Salt Cake	1.57E+02	kg	S	1.59	g/mL	1403	kL	7.06E+01	ug/g	Jan 1 2001 12:00AM
241-AW-101	Mn	Salt Cake	6.25E+02	kg	S	1.59	g/mL	1403	kL	2.80E+02	ug/g	Jan 1 2001 12:00AM
241-AW-101	Mn	Supernatant	1.11E+01	kg	S	1.48	g/mL	2768	kL	2.70E+00	ug/g	Jan 1 2001 12:00AM
241-AW-101	Mo	Supernatant	1.88E+02	kg	S	1.47	g/mL	2768	kL	4.63E+01	ug/g	Jan 1 2001 12:00AM
241-AW-101	Mo	Salt Cake	7.63E+01	kg	S	1.59	g/mL	1403	kL	3.42E+01	ug/g	Jan 1 2001 12:00AM
241-AW-101	Na	Salt Cake	3.77E+05	kg	S	1.59	g/mL	1403	kL	1.69E+05	ug/g	Jan 1 2001 12:00AM
241-AW-101	Na	Supernatant	7.11E+05	kg	S	1.47	g/mL	2768	kL	1.75E+05	ug/g	Jan 1 2001 12:00AM
241-AW-101	Nd	Salt Cake	2.57E+01	kg	S	1.59	g/mL	1403	kL	1.15E+01	ug/g	Jan 1 2001 12:00AM
241-AW-101	Nd	Supernatant	2.21E+01	kg	S	1.48	g/mL	2768	kL	5.41E+00	ug/g	Jan 1 2001 12:00AM
241-AW-101	NH3	Supernatant	2.77E+01	kg	S	1.47	g/mL	2768	kL	6.80E+00	ug/g	Jan 1 2001 12:00AM
241-AW-101	Ni	Salt Cake	9.18E+01	kg	S	1.59	g/mL	1403	kL	4.11E+01	ug/g	Jan 1 2001 12:00AM
241-AW-101	Ni	Supernatant	1.69E+01	kg	S	1.48	g/mL	2768	kL	4.12E+00	ug/g	Jan 1 2001 12:00AM
241-AW-101	NO2	Salt Cake	1.30E+05	kg	S	1.59	g/mL	1403	kL	5.84E+04	ug/g	Jan 1 2001 12:00AM
241-AW-101	NO2	Supernatant	3.32E+05	kg	S	1.47	g/mL	2768	kL	8.16E+04	ug/g	Jan 1 2001 12:00AM
241-AW-101	NO3	Salt Cake	3.46E+05	kg	S	1.59	g/mL	1403	kL	1.55E+05	ug/g	Jan 1 2001 12:00AM
241-AW-101	NO3	Supernatant	4.71E+05	kg	S	1.47	g/mL	2768	kL	1.16E+05	ug/g	Jan 1 2001 12:00AM
241-AW-101	OH	Salt Cake	1.17E+05	kg	S	1.59	g/mL	1403	kL	5.26E+04	ug/g	Jan 1 2001 12:00AM
241-AW-101	OH	Supernatant	2.65E+05	kg	S	1.47	g/mL	2768	kL	6.52E+04	ug/g	Jan 1 2001 12:00AM
241-AW-101	Oxalate	Salt Cake	2.59E+04	kg	S	1.58	g/mL	1403	kL	1.17E+04	ug/g	Jan 1 2001 12:00AM
241-AW-101	Pb	Salt Cake	5.34E+02	kg	S	1.59	g/mL	1403	kL	2.39E+02	ug/g	Jan 1 2001 12:00AM
241-AW-101	Pb	Supernatant	2.03E+02	kg	S	1.48	g/mL	2768	kL	4.97E+01	ug/g	Jan 1 2001 12:00AM
241-AW-101	PO4	Salt Cake	9.26E+03	kg	S	1.59	g/mL	1403	kL	4.15E+03	ug/g	Jan 1 2001 12:00AM
241-AW-101	PO4	Supernatant	1.82E+03	kg	S	1.48	g/mL	2768	kL	4.45E+02	ug/g	Jan 1 2001 12:00AM
241-AW-101	Sb	Supernatant	1.15E+02	kg	S	1.48	g/mL	2768	kL	2.80E+01	ug/g	Jan 1 2001 12:00AM
241-AW-101	Sb	Salt Cake	4.99E+01	kg	S	1.58	g/mL	1403	kL	2.25E+01	ug/g	Jan 1 2001 12:00AM
241-AW-101	Se	Supernatant	5.67E+01	kg	S	1.48	g/mL	2768	kL	1.39E+01	ug/g	Jan 1 2001 12:00AM
241-AW-101	Se	Salt Cake	6.36E+01	kg	S	1.59	g/mL	1403	kL	2.85E+01	ug/g	Jan 1 2001 12:00AM
241-AW-101	Si	Salt Cake	8.95E+02	kg	S	1.59	g/mL	1403	kL	4.01E+02	ug/g	Jan 1 2001 12:00AM
241-AW-101	Si	Supernatant	4.98E+02	kg	S	1.47	g/mL	2768	kL	1.22E+02	ug/g	Jan 1 2001 12:00AM
241-AW-101	SO4	Salt Cake	9.17E+03	kg	S	1.59	g/mL	1403	kL	4.11E+03	ug/g	Jan 1 2001 12:00AM
241-AW-101	SO4	Supernatant	3.54E+03	kg	S	1.47	g/mL	2768	kL	8.69E+02	ug/g	Jan 1 2001 12:00AM
241-AW-101	Sr	Salt Cake	7.92E+00	kg	S	1.59	g/mL	1403	kL	3.55E+00	ug/g	Jan 1 2001 12:00AM
241-AW-101	Sr	Supernatant	2.77E+00	kg	S	1.48	g/mL	2768	kL	6.76E-01	ug/g	Jan 1 2001 12:00AM
241-AW-101	Ti	Salt Cake	8.67E+00	kg	S	1.58	g/mL	1403	kL	3.91E+00	ug/g	Jan 1 2001 12:00AM
241-AW-101	Ti	Supernatant	2.59E+01	kg	S	1.47	g/mL	2768	kL	6.37E+00	ug/g	Jan 1 2001 12:00AM
241-AW-101	TIC as CO3	Salt Cake	9.35E+04	kg	S	1.59	g/mL	1403	kL	4.19E+04	ug/g	Jan 1 2001 12:00AM
241-AW-101	TIC as CO3	Supernatant	2.55E+04	kg	S	1.47	g/mL	2768	kL	6.26E+03	ug/g	Jan 1 2001 12:00AM
241-AW-101	Tl	Supernatant	1.15E+02	kg	S	1.48	g/mL	2768	kL	2.80E+01	ug/g	Jan 1 2001 12:00AM
241-AW-101	Tl	Salt Cake	1.27E+02	kg	S	1.59	g/mL	1403	kL	5.70E+01	ug/g	Jan 1 2001 12:00AM
241-AW-101	UTOTAL	Salt Cake	2.69E+03	kg	S	1.59	g/mL	1403	kL	1.20E+03	ug/g	Jan 1 2001 12:00AM
241-AW-101	UTOTAL	Supernatant	9.77E+00	kg	S	1.48	g/mL	2768	kL	2.39E+00	ug/g	Jan 1 2001 12:00AM
241-AW-101	V	Salt Cake	1.23E+01	kg	S	1.59	g/mL	1403	kL	5.50E+00	ug/g	Jan 1 2001 12:00AM
241-AW-101	V	Supernatant	1.11E+01	kg	S	1.48	g/mL	2768	kL	2.70E+00	ug/g	Jan 1 2001 12:00AM
241-AW-101	Zn	Supernatant	6.03E+01	kg	S	1.47	g/mL	2768	kL	1.48E+01	ug/g	Jan 1 2001 12:00AM

CALCULATION SHEET

PROJECT: RPP-WTP
JOB NO.: 24590
CALC NO.: 24590-WTP-M4C-FRP-00001
SHEET REV: 0A
SHEET NO.: 82

BY: E. Barrios
DATE: 12/04/02

SUBJECT: Updated Emissions Run Feed Vector

Tank Name	Analyte	Waste Phase	Inventory	Inventory Units	Basis	Density	Density Units	Volume	Volume Units	Concentration	Concentration Units	Decay Date
241-AW-101	Zn	Salt Cake	7.24E+01	kg	S	1.59	g/mL	1403	kL	3.25E+01	ug/g	Jan 1 2001 12:00AM
241-AW-101	Zr	Salt Cake	1.68E+02	kg	S	1.59	g/mL	1403	kL	7.54E+01	ug/g	Jan 1 2001 12:00AM
241-AW-101	Zr	Supernatant	3.96E+01	kg	S	1.47	g/mL	2768	kL	9.73E+00	ug/g	Jan 1 2001 12:00AM
241-AZ-101	106Ru	Supernatant	3.05E-04	Ci	TE	1.11	g/mL	3539	kL	3.66E-08	uCi/g	Jan 1 2001 12:00AM
241-AZ-101	113mCd	Supernatant	3.24E-02	Ci	TE	1.11	g/mL	3539	kL	3.88E-02	uCi/g	Jan 1 2001 12:00AM
241-AZ-101	125Sb	Supernatant	4.02E+03	Ci	S	1.24	g/mL	3539	kL	1.07E+00	uCi/g	Jan 1 2001 12:00AM
241-AZ-101	126Sn	Supernatant	7.89E+00	Ci	S	1.24	g/mL	3539	kL	2.11E-03	uCi/g	Jan 1 2001 12:00AM
241-AZ-101	129I	Supernatant	2.69E-03	Ci	S	1.24	g/mL	3539	kL	7.18E-05	uCi/g	Jan 1 2001 12:00AM
241-AZ-101	134Cs	Supernatant	1.45E+04	Ci	TE	1.11	g/mL	3539	kL	1.73E+00	uCi/g	Jan 1 2001 12:00AM
241-AZ-101	137Cs	Supernatant	5.65E+06	Ci	S	1.24	g/mL	3539	kL	1.51E+03	uCi/g	Jan 1 2001 12:00AM
241-AZ-101	137mBa	Supernatant	5.35E+06	Ci	C		g/mL	3539	kL		uCi/g	Jan 1 2001 12:00AM
241-AZ-101	14C	Supernatant	6.19E+00	Ci	S	1.24	g/mL	3539	kL	1.65E-03	uCi/g	Jan 1 2001 12:00AM
241-AZ-101	151Sm	Supernatant	4.99E+04	Ci	TE	1.11	g/mL	3539	kL	5.98E+00	uCi/g	Jan 1 2001 12:00AM
241-AZ-101	152Eu	Supernatant	2.63E+02	Ci	TE	1.11	g/mL	3539	kL	3.15E-02	uCi/g	Jan 1 2001 12:00AM
241-AZ-101	154Eu	Supernatant	1.98E+02	Ci	S	1.24	g/mL	3539	kL	5.28E-02	uCi/g	Jan 1 2001 12:00AM
241-AZ-101	155Eu	Supernatant	2.57E+02	Ci	E	1.24	g/mL	3539	kL	6.87E-02	uCi/g	Jan 1 2001 12:00AM
241-AZ-101	226Ra	Supernatant	4.65E-04	Ci	TE	1.11	g/mL	3539	kL	5.57E-08	uCi/g	Jan 1 2001 12:00AM
241-AZ-101	227Ac	Supernatant	5.18E-03	Ci	TE	1.11	g/mL	3539	kL	6.19E-07	uCi/g	Jan 1 2001 12:00AM
241-AZ-101	228Ra	Supernatant	9.72E-08	Ci	TE	1.11	g/mL	3539	kL	1.16E-11	uCi/g	Jan 1 2001 12:00AM
241-AZ-101	229Th	Supernatant	3.89E-06	Ci	TE	1.11	g/mL	3539	kL	4.65E-10	uCi/g	Jan 1 2001 12:00AM
241-AZ-101	231Pa	Supernatant	1.51E-02	Ci	TE	1.11	g/mL	3539	kL	1.80E-06	uCi/g	Jan 1 2001 12:00AM
241-AZ-101	232Th	Supernatant	1.57E-07	Ci	TE	1.11	g/mL	3539	kL	1.87E-11	uCi/g	Jan 1 2001 12:00AM
241-AZ-101	232U	Supernatant	6.30E-05	Ci	C	1.24	g/mL	3539	kL	1.68E-08	uCi/g	Jan 1 2001 12:00AM
241-AZ-101	233U	Supernatant	2.57E-04	Ci	C	1.24	g/mL	3539	kL	6.86E-08	uCi/g	Jan 1 2001 12:00AM
241-AZ-101	234U	Supernatant	1.79E-03	Ci	C	1.24	g/mL	3539	kL	4.77E-07	uCi/g	Jan 1 2001 12:00AM
241-AZ-101	235U	Supernatant	6.80E-05	Ci	C	1.24	g/mL	3539	kL	1.82E-08	uCi/g	Jan 1 2001 12:00AM
241-AZ-101	236U	Supernatant	1.45E-04	Ci	C	1.24	g/mL	3539	kL	3.87E-08	uCi/g	Jan 1 2001 12:00AM
241-AZ-101	237Np	Supernatant	1.29E-01	Ci	S	1.24	g/mL	3539	kL	3.44E-05	uCi/g	Jan 1 2001 12:00AM
241-AZ-101	238Pu	Supernatant	1.71E-01	Ci	C	1.24	g/mL	3539	kL	4.58E-05	uCi/g	Jan 1 2001 12:00AM
241-AZ-101	238U	Supernatant	1.24E-03	Ci	C	1.24	g/mL	3539	kL	3.30E-07	uCi/g	Jan 1 2001 12:00AM
241-AZ-101	239Pu	Supernatant	1.48E+00	Ci	C	1.24	g/mL	3539	kL	3.96E-04	uCi/g	Jan 1 2001 12:00AM
241-AZ-101	240Pu	Supernatant	4.47E-01	Ci	C	1.24	g/mL	3539	kL	1.20E-04	uCi/g	Jan 1 2001 12:00AM
241-AZ-101	241Am	Supernatant	2.13E+00	Ci	S	1.24	g/mL	3539	kL	5.69E-04	uCi/g	Jan 1 2001 12:00AM
241-AZ-101	241Pu	Supernatant	1.32E+01	Ci	C	1.24	g/mL	3539	kL	3.52E-03	uCi/g	Jan 1 2001 12:00AM
241-AZ-101	242Cm	Supernatant	1.90E-03	Ci	C	1.24	g/mL	3539	kL	5.09E-07	uCi/g	Jan 1 2001 12:00AM
241-AZ-101	242Pu	Supernatant	6.90E-05	Ci	C	1.24	g/mL	3539	kL	1.84E-08	uCi/g	Jan 1 2001 12:00AM
241-AZ-101	243Am	Supernatant	4.48E-04	Ci	C	1.24	g/mL	3539	kL	1.20E-07	uCi/g	Jan 1 2001 12:00AM
241-AZ-101	243Cm	Supernatant	2.78E-04	Ci	C	1.24	g/mL	3539	kL	7.43E-08	uCi/g	Jan 1 2001 12:00AM
241-AZ-101	244Cm	Supernatant	6.24E-03	Ci	C	1.24	g/mL	3539	kL	1.67E-06	uCi/g	Jan 1 2001 12:00AM
241-AZ-101	3H	Supernatant	5.48E+01	Ci	S	1.24	g/mL	3539	kL	1.46E-02	uCi/g	Jan 1 2001 12:00AM
241-AZ-101	59Ni	Supernatant	0.00E+00	Ci	TE	1.11	g/mL	3539	kL	0.00E+00	uCi/g	Jan 1 2001 12:00AM
241-AZ-101	60Co	Supernatant	5.92E+01	Ci	S	1.24	g/mL	3539	kL	1.58E-02	uCi/g	Jan 1 2001 12:00AM
241-AZ-101	63Ni	Supernatant	0.00E+00	Ci	TE	1.11	g/mL	3539	kL	0.00E+00	uCi/g	Jan 1 2001 12:00AM
241-AZ-101	79Se	Supernatant	4.44E+00	Ci	S	1.24	g/mL	3539	kL	1.19E-03	uCi/g	Jan 1 2001 12:00AM
241-AZ-101	90Sr	Supernatant	3.03E+03	Ci	S	1.24	g/mL	3539	kL	8.10E-01	uCi/g	Jan 1 2001 12:00AM
241-AZ-101	90Y	Supernatant	3.03E+03	Ci	C		g/mL	3539	kL		uCi/g	Jan 1 2001 12:00AM
241-AZ-101	93mNb	Supernatant	5.95E+01	Ci	TE	1.11	g/mL	3539	kL	7.12E-03	uCi/g	Jan 1 2001 12:00AM

CALCULATION SHEET

PROJECT: BPP-WTP
JOB NO.: 24590
CALC NO.: 24590-WTP-M6C-FRP-00001
SHEET REV: 0A
SHEET NO.: B3

BY: E. Barrios
DATE: 12/04/02

SUBJECT: Updated Emissions Run Feed Vector

Tank Name	Analyte	Waste Phase	Inventory	Inventory Units	Basis	Density	Density Units	Volume	Volume Units	Concentration	Concentration Units	Decay Date
241-AZ-101	93Zr	Supernatant	7.53E+01	Ci	TE	1.11	g/mL	3539	kL	9.01E-03	uCi/g	Jan 1 2001 12:00AM
241-AZ-101	99Tc	Supernatant	1.17E+03	Ci	S	1.24	g/mL	3539	kL	3.14E-01	uCi/g	Jan 1 2001 12:00AM
241-AZ-101	Ag	Supernatant	2.43E+01	kg	S	1.24	g/mL	3539	kL	6.50E+00	ug/g	Jan 1 2001 12:00AM
241-AZ-101	Al	Supernatant	2.58E+04	kg	S	1.24	g/mL	3539	kL	6.90E+03	ug/g	Jan 1 2001 12:00AM
241-AZ-101	As	Supernatant	2.52E+01	kg	S	1.24	g/mL	3539	kL	6.73E+00	ug/g	Jan 1 2001 12:00AM
241-AZ-101	B	Supernatant	6.10E+01	kg	S	1.24	g/mL	3539	kL	1.63E+01	ug/g	Jan 1 2001 12:00AM
241-AZ-101	Ba	Supernatant	2.53E-01	kg	S	1.24	g/mL	3539	kL	6.77E-02	ug/g	Jan 1 2001 12:00AM
241-AZ-101	Be	Supernatant	9.57E-01	kg	S	1.24	g/mL	3539	kL	2.56E-01	ug/g	Jan 1 2001 12:00AM
241-AZ-101	Bi	Supernatant	0.00E+00	kg	TE	1.11	g/mL	3539	kL	0.00E+00	ug/g	Jan 1 2001 12:00AM
241-AZ-101	Ca	Supernatant	1.21E+02	kg	S	1.24	g/mL	3539	kL	3.23E+01	ug/g	Jan 1 2001 12:00AM
241-AZ-101	Cd	Supernatant	6.75E+00	kg	S	1.24	g/mL	3539	kL	1.80E+00	ug/g	Jan 1 2001 12:00AM
241-AZ-101	Ce	Supernatant	1.92E-01	kg	S	1.24	g/mL	3539	kL	5.13E-02	ug/g	Jan 1 2001 12:00AM
241-AZ-101	Cl	Supernatant	4.56E+02	kg	S	1.24	g/mL	3539	kL	1.22E+02	ug/g	Jan 1 2001 12:00AM
241-AZ-101	Co	Supernatant	1.92E-01	kg	S	1.24	g/mL	3539	kL	5.13E-02	ug/g	Jan 1 2001 12:00AM
241-AZ-101	Cr	Supernatant	2.18E+03	kg	S	1.24	g/mL	3539	kL	5.83E+02	ug/g	Jan 1 2001 12:00AM
241-AZ-101	Cu	Supernatant	1.21E+01	kg	S	1.24	g/mL	3539	kL	3.23E+00	ug/g	Jan 1 2001 12:00AM
241-AZ-101	F	Supernatant	5.28E+03	kg	S	1.24	g/mL	3539	kL	1.41E+03	ug/g	Jan 1 2001 12:00AM
241-AZ-101	Fe	Supernatant	6.76E+01	kg	S	1.24	g/mL	3539	kL	1.81E+01	ug/g	Jan 1 2001 12:00AM
241-AZ-101	Hg	Supernatant	4.59E-02	kg	S	1.24	g/mL	3539	kL	1.23E-02	ug/g	Jan 1 2001 12:00AM
241-AZ-101	K	Supernatant	1.44E+04	kg	S	1.24	g/mL	3539	kL	3.84E+03	ug/g	Jan 1 2001 12:00AM
241-AZ-101	La	Supernatant	0.00E+00	kg	TE	1.11	g/mL	3539	kL	0.00E+00	ug/g	Jan 1 2001 12:00AM
241-AZ-101	Li	Supernatant	1.68E+00	kg	S	1.24	g/mL	3539	kL	4.48E-01	ug/g	Jan 1 2001 12:00AM
241-AZ-101	Mg	Supernatant	1.21E+02	kg	S	1.24	g/mL	3539	kL	3.23E+01	ug/g	Jan 1 2001 12:00AM
241-AZ-101	Mn	Supernatant	0.00E+00	kg	TE	1.11	g/mL	3539	kL	0.00E+00	ug/g	Jan 1 2001 12:00AM
241-AZ-101	Mo	Supernatant	2.91E+02	kg	S	1.24	g/mL	3539	kL	7.78E+01	ug/g	Jan 1 2001 12:00AM
241-AZ-101	Na	Supernatant	3.35E+05	kg	S	1.24	g/mL	3539	kL	8.95E+04	ug/g	Jan 1 2001 12:00AM
241-AZ-101	Nd	Supernatant	1.21E+02	kg	S	1.24	g/mL	3539	kL	3.23E+01	ug/g	Jan 1 2001 12:00AM
241-AZ-101	Ni	Supernatant	0.00E+00	kg	TE	1.11	g/mL	3539	kL	0.00E+00	ug/g	Jan 1 2001 12:00AM
241-AZ-101	NO2	Supernatant	2.19E+05	kg	S	1.24	g/mL	3539	kL	5.85E+04	ug/g	Jan 1 2001 12:00AM
241-AZ-101	NO3	Supernatant	2.15E+05	kg	S	1.24	g/mL	3539	kL	5.74E+04	ug/g	Jan 1 2001 12:00AM
241-AZ-101	OH	Supernatant	3.47E+04	kg	S	1.24	g/mL	3539	kL	9.27E+03	ug/g	Jan 1 2001 12:00AM
241-AZ-101	Oxalate	Supernatant	3.92E+03	kg	S	1.24	g/mL	3539	kL	1.05E+03	ug/g	Jan 1 2001 12:00AM
241-AZ-101	Pb	Supernatant	0.00E+00	kg	TE	1.11	g/mL	3539	kL	0.00E+00	ug/g	Jan 1 2001 12:00AM
241-AZ-101	Pd	Supernatant	6.34E+00	kg	S	1.24	g/mL	3539	kL	1.69E+00	ug/g	Jan 1 2001 12:00AM
241-AZ-101	PO4	Supernatant	4.03E+03	kg	S	1.24	g/mL	3539	kL	1.08E+03	ug/g	Jan 1 2001 12:00AM
241-AZ-101	Pr	Supernatant	1.92E-01	kg	S	1.24	g/mL	3539	kL	5.13E-02	ug/g	Jan 1 2001 12:00AM
241-AZ-101	Rb	Supernatant	1.52E+01	kg	S	1.24	g/mL	3539	kL	4.05E+00	ug/g	Jan 1 2001 12:00AM
241-AZ-101	Rh	Supernatant	6.82E+00	kg	S	1.24	g/mL	3539	kL	1.82E+00	ug/g	Jan 1 2001 12:00AM
241-AZ-101	Ru	Supernatant	1.52E+00	kg	S	1.24	g/mL	3539	kL	4.07E-01	ug/g	Jan 1 2001 12:00AM
241-AZ-101	Sb	Supernatant	1.92E-01	kg	S	1.24	g/mL	3539	kL	5.13E-02	ug/g	Jan 1 2001 12:00AM
241-AZ-101	Se	Supernatant	7.46E+01	kg	S	1.24	g/mL	3539	kL	1.99E+01	ug/g	Jan 1 2001 12:00AM
241-AZ-101	Si	Supernatant	2.22E+02	kg	S	1.24	g/mL	3539	kL	5.94E+01	ug/g	Jan 1 2001 12:00AM
241-AZ-101	SO4	Supernatant	4.54E+04	kg	S	1.24	g/mL	3539	kL	1.21E+04	ug/g	Jan 1 2001 12:00AM
241-AZ-101	Sr	Supernatant	1.21E+01	kg	S	1.24	g/mL	3539	kL	3.23E+00	ug/g	Jan 1 2001 12:00AM
241-AZ-101	Ta	Supernatant	1.92E-01	kg	S	1.24	g/mL	3539	kL	5.13E-02	ug/g	Jan 1 2001 12:00AM
241-AZ-101	Tc	Supernatant	1.92E-01	kg	S	1.24	g/mL	3539	kL	5.13E-02	ug/g	Jan 1 2001 12:00AM
241-AZ-101	Th	Supernatant	1.82E-01	kg	S	1.24	g/mL	3539	kL	4.86E-02	ug/g	Jan 1 2001 12:00AM

CALCULATION SHEET

PROJECT: RPP-WTP
JOB NO : 24590
CALC NO.: 24590-WTP-M4C-FRP-00001
SHEET REV: 0A
SHEET NO.: 84

BY: E. Barrios
DATE: 12/04/02

SUBJECT Updated Emissions Run Feed Vector

Tank Name	Analyte	Waste Phase	Inventory	Inventory Units	Basis	Density	Density Units	Volume	Volume Units	Concentration	Concentration Units	Decay Date
241-AZ-101	Ti	Supernatant	1.21E+01	kg	S	1.24	g/mL	3539	kL	3.23E+00	ug/g	Jan 1 2001 12:00AM
241-AZ-101	TIC as CO3	Supernatant	1.03E+05	kg	S	1.24	g/mL	3539	kL	2.76E+04	ug/g	Jan 1 2001 12:00AM
241-AZ-101	Tl	Supernatant	1.92E-01	kg	S	1.24	g/mL	3539	kL	5.13E-02	ug/g	Jan 1 2001 12:00AM
241-AZ-101	UTOTAL	Supernatant	3.71E+00	kg	S	1.24	g/mL	3539	kL	9.92E-01	ug/g	Jan 1 2001 12:00AM
241-AZ-101	V	Supernatant	9.60E+00	kg	S	1.24	g/mL	3539	kL	2.56E+00	ug/g	Jan 1 2001 12:00AM
241-AZ-101	Zn	Supernatant	1.21E+01	kg	S	1.24	g/mL	3539	kL	3.23E+00	ug/g	Jan 1 2001 12:00AM
241-AZ-101	Zr	Supernatant	1.35E+01	kg	S	1.24	g/mL	3539	kL	3.60E+00	ug/g	Jan 1 2001 12:00AM
241-AZ-102	106Ru	Supernatant	6.25E-05	Ci	M	1.05	g/mL	3369	kL	1.71E-08	uCi/g	Jan 1 2001 12:00AM
241-AZ-102	113mCd	Supernatant	6.32E+01	Ci	M	1.05	g/mL	3369	kL	1.73E-02	uCi/g	Jan 1 2001 12:00AM
241-AZ-102	125Sb	Supernatant	3.17E+03	Ci	S	1.14	g/mL	3369	kL	9.03E-01	uCi/g	Jan 1 2001 12:00AM
241-AZ-102	126Sn	Supernatant	1.80E+00	Ci	M	1.05	g/mL	3369	kL	4.91E-04	uCi/g	Jan 1 2001 12:00AM
241-AZ-102	129I	Supernatant	1.16E-01	Ci	S	1.14	g/mL	3369	kL	3.29E-05	uCi/g	Jan 1 2001 12:00AM
241-AZ-102	134Cs	Supernatant	2.38E+03	Ci	S	1.14	g/mL	3369	kL	6.78E-01	uCi/g	Jan 1 2001 12:00AM
241-AZ-102	137Cs	Supernatant	3.35E+06	Ci	S	1.14	g/mL	3369	kL	9.54E+02	uCi/g	Jan 1 2001 12:00AM
241-AZ-102	137mBa	Supernatant	3.17E+06	Ci	C		g/mL	3369	kL		uCi/g	Jan 1 2001 12:00AM
241-AZ-102	14C	Supernatant	3.17E+00	Ci	S	1.14	g/mL	3369	kL	9.03E-04	uCi/g	Jan 1 2001 12:00AM
241-AZ-102	151Sm	Supernatant	9.94E+03	Ci	M	1.05	g/mL	3369	kL	2.72E+00	uCi/g	Jan 1 2001 12:00AM
241-AZ-102	152Eu	Supernatant	5.02E+01	Ci	M	1.05	g/mL	3369	kL	1.37E-02	uCi/g	Jan 1 2001 12:00AM
241-AZ-102	154Eu	Supernatant	2.01E+02	Ci	S	1.14	g/mL	3369	kL	5.71E-02	uCi/g	Jan 1 2001 12:00AM
241-AZ-102	155Eu	Supernatant	3.83E+02	Ci	S	1.14	g/mL	3369	kL	1.09E-01	uCi/g	Jan 1 2001 12:00AM
241-AZ-102	226Ra	Supernatant	9.52E-05	Ci	M	1.05	g/mL	3369	kL	2.60E-08	uCi/g	Jan 1 2001 12:00AM
241-AZ-102	227Ac	Supernatant	1.04E-03	Ci	M	1.05	g/mL	3369	kL	2.85E-07	uCi/g	Jan 1 2001 12:00AM
241-AZ-102	228Ra	Supernatant	1.32E-03	Ci	M	1.05	g/mL	3369	kL	3.61E-07	uCi/g	Jan 1 2001 12:00AM
241-AZ-102	229Th	Supernatant	6.37E-05	Ci	M	1.05	g/mL	3369	kL	1.74E-08	uCi/g	Jan 1 2001 12:00AM
241-AZ-102	231Pa	Supernatant	2.99E-03	Ci	M	1.05	g/mL	3369	kL	8.17E-07	uCi/g	Jan 1 2001 12:00AM
241-AZ-102	232Th	Supernatant	6.78E-06	Ci	S	1.14	g/mL	3369	kL	1.93E-09	uCi/g	Jan 1 2001 12:00AM
241-AZ-102	232U	Supernatant	8.01E-05	Ci	M	1.05	g/mL	3369	kL	2.19E-08	uCi/g	Jan 1 2001 12:00AM
241-AZ-102	233U	Supernatant	3.10E-04	Ci	M	1.05	g/mL	3369	kL	8.47E-08	uCi/g	Jan 1 2001 12:00AM
241-AZ-102	234U	Supernatant	2.15E-02	Ci	M	1.05	g/mL	3369	kL	5.87E-06	uCi/g	Jan 1 2001 12:00AM
241-AZ-102	235U	Supernatant	7.04E-04	Ci	S	1.14	g/mL	3369	kL	2.00E-07	uCi/g	Jan 1 2001 12:00AM
241-AZ-102	236U	Supernatant	1.65E-03	Ci	S	1.14	g/mL	3369	kL	4.70E-07	uCi/g	Jan 1 2001 12:00AM
241-AZ-102	237Np	Supernatant	3.58E-01	Ci	S	1.14	g/mL	3369	kL	1.02E-04	uCi/g	Jan 1 2001 12:00AM
241-AZ-102	238Pu	Supernatant	2.63E+00	Ci	C	1.14	g/mL	3369	kL	7.49E-04	uCi/g	Jan 1 2001 12:00AM
241-AZ-102	238U	Supernatant	1.31E-02	Ci	S	1.14	g/mL	3369	kL	3.73E-06	uCi/g	Jan 1 2001 12:00AM
241-AZ-102	239Pu	Supernatant	2.38E+01	Ci	C	1.14	g/mL	3369	kL	6.77E-03	uCi/g	Jan 1 2001 12:00AM
241-AZ-102	240Pu	Supernatant	7.04E+00	Ci	C	1.14	g/mL	3369	kL	2.00E-03	uCi/g	Jan 1 2001 12:00AM
241-AZ-102	241Am	Supernatant	1.24E+00	Ci	S	1.14	g/mL	3369	kL	3.52E-04	uCi/g	Jan 1 2001 12:00AM
241-AZ-102	241Pu	Supernatant	2.01E+02	Ci	C	1.14	g/mL	3369	kL	5.71E-02	uCi/g	Jan 1 2001 12:00AM
241-AZ-102	242Cm	Supernatant	1.06E-01	Ci	C	1.14	g/mL	3369	kL	3.02E-05	uCi/g	Jan 1 2001 12:00AM
241-AZ-102	242Pu	Supernatant	1.06E-03	Ci	C	1.14	g/mL	3369	kL	3.02E-07	uCi/g	Jan 1 2001 12:00AM
241-AZ-102	243Am	Supernatant	1.62E-04	Ci	C	1.14	g/mL	3369	kL	4.61E-08	uCi/g	Jan 1 2001 12:00AM
241-AZ-102	243Cm	Supernatant	1.55E-02	Ci	C	1.14	g/mL	3369	kL	4.42E-06	uCi/g	Jan 1 2001 12:00AM
241-AZ-102	244Cm	Supernatant	2.05E-03	Ci	C	1.14	g/mL	3369	kL	5.83E-07	uCi/g	Jan 1 2001 12:00AM
241-AZ-102	3H	Supernatant	1.16E+02	Ci	S	1.14	g/mL	3369	kL	3.29E-02	uCi/g	Jan 1 2001 12:00AM
241-AZ-102	59Ni	Supernatant	3.66E-02	Ci	M	1.05	g/mL	3369	kL	1.00E-05	uCi/g	Jan 1 2001 12:00AM
241-AZ-102	60Co	Supernatant	5.85E+01	Ci	S	1.14	g/mL	3369	kL	1.67E-02	uCi/g	Jan 1 2001 12:00AM
241-AZ-102	63Ni	Supernatant	3.44E+00	Ci	M	1.05	g/mL	3369	kL	9.40E-04	uCi/g	Jan 1 2001 12:00AM

CALCULATION SHEET

PROJECT: RPP-WTP
JOB NO.: 24590
CALC NO.: 24590-WTP-M4C-FRP-00001
SHEET REV: 0A
SHEET NO.: 85

BY: E. Berriss
DATE: 12/04/02

SUBJECT: Updated Emissions Run Feed Vector

Tank Name	Analyte	Waste Phase	Inventory	Inventory Units	Basis	Density	Density Units	Volume	Volume Units	Concentration	Concentration Units	Decay Date
241-AZ-102	79Se	Supernatant	1.43E+00	Ci	S	1.14	g/mL	3369	kL	4.07E-04	uCi/g	Jan 1 2001 12:00AM
241-AZ-102	90Sr	Supernatant	7.00E+03	Ci	S	1.14	g/mL	3369	kL	1.99E+00	uCi/g	Jan 1 2001 12:00AM
241-AZ-102	90Y	Supernatant	7.00E+03	Ci	C		g/mL	3369	kL		uCi/g	Jan 1 2001 12:00AM
241-AZ-102	93mNb	Supernatant	1.18E+01	Ci	M	1.05	g/mL	3369	kL	3.23E-03	uCi/g	Jan 1 2001 12:00AM
241-AZ-102	93Zr	Supernatant	1.49E+01	Ci	M	1.05	g/mL	3369	kL	4.08E-03	uCi/g	Jan 1 2001 12:00AM
241-AZ-102	99Tc	Supernatant	6.99E+02	Ci	S	1.14	g/mL	3369	kL	1.99E-01	uCi/g	Jan 1 2001 12:00AM
241-AZ-102	Ag	Supernatant	1.25E+01	kg	S	1.14	g/mL	3369	kL	3.57E+00	ug/g	Jan 1 2001 12:00AM
241-AZ-102	Al	Supernatant	1.26E+03	kg	S	1.14	g/mL	3369	kL	3.27E+02	ug/g	Jan 1 2001 12:00AM
241-AZ-102	As	Supernatant	1.29E+01	kg	S	1.14	g/mL	3369	kL	3.66E+00	ug/g	Jan 1 2001 12:00AM
241-AZ-102	B	Supernatant	1.36E+01	kg	S	1.14	g/mL	3369	kL	3.86E+00	ug/g	Jan 1 2001 12:00AM
241-AZ-102	Ba	Supernatant	1.57E-01	kg	S	1.14	g/mL	3369	kL	4.46E-02	ug/g	Jan 1 2001 12:00AM
241-AZ-102	Be	Supernatant	7.43E-02	kg	S	1.14	g/mL	3369	kL	2.11E-02	ug/g	Jan 1 2001 12:00AM
241-AZ-102	Bi	Supernatant	1.56E+00	kg	M	1.05	g/mL	3369	kL	4.28E-01	ug/g	Jan 1 2001 12:00AM
241-AZ-102	Ca	Supernatant	3.41E+01	kg	S	1.14	g/mL	3369	kL	8.86E+00	ug/g	Jan 1 2001 12:00AM
241-AZ-102	Cd	Supernatant	1.70E+00	kg	S	1.14	g/mL	3369	kL	4.43E-01	ug/g	Jan 1 2001 12:00AM
241-AZ-102	Ce	Supernatant	7.61E-02	kg	S	1.14	g/mL	3369	kL	2.17E-02	ug/g	Jan 1 2001 12:00AM
241-AZ-102	Cl	Supernatant	2.36E+02	kg	S	1.14	g/mL	3369	kL	6.72E+01	ug/g	Jan 1 2001 12:00AM
241-AZ-102	CN	Supernatant	2.44E+01	kg	S	1.14	g/mL	3369	kL	6.95E+00	ug/g	Jan 1 2001 12:00AM
241-AZ-102	Co	Supernatant	7.43E-02	kg	S	1.14	g/mL	3369	kL	2.11E-02	ug/g	Jan 1 2001 12:00AM
241-AZ-102	Cr	Supernatant	2.27E+03	kg	S	1.14	g/mL	3369	kL	6.46E+02	ug/g	Jan 1 2001 12:00AM
241-AZ-102	Cu	Supernatant	3.41E+00	kg	S	1.14	g/mL	3369	kL	8.86E-01	ug/g	Jan 1 2001 12:00AM
241-AZ-102	F	Supernatant	3.51E+03	kg	S	1.14	g/mL	3369	kL	1.00E+03	ug/g	Jan 1 2001 12:00AM
241-AZ-102	Fe	Supernatant	1.70E+01	kg	S	1.14	g/mL	3369	kL	4.43E+00	ug/g	Jan 1 2001 12:00AM
241-AZ-102	Hg	Supernatant	2.03E-01	kg	S	1.14	g/mL	3369	kL	5.79E-02	ug/g	Jan 1 2001 12:00AM
241-AZ-102	K	Supernatant	9.86E+03	kg	S	1.14	g/mL	3369	kL	2.81E+03	ug/g	Jan 1 2001 12:00AM
241-AZ-102	La	Supernatant	1.17E-02	kg	M	1.05	g/mL	3369	kL	3.20E-03	ug/g	Jan 1 2001 12:00AM
241-AZ-102	Li	Supernatant	4.93E-01	kg	S	1.14	g/mL	3369	kL	1.40E-01	ug/g	Jan 1 2001 12:00AM
241-AZ-102	Mg	Supernatant	3.41E+01	kg	S	1.14	g/mL	3369	kL	8.86E+00	ug/g	Jan 1 2001 12:00AM
241-AZ-102	Mn	Supernatant	3.41E+00	kg	S	1.14	g/mL	3369	kL	8.86E-01	ug/g	Jan 1 2001 12:00AM
241-AZ-102	Mo	Supernatant	1.67E+02	kg	S	1.14	g/mL	3369	kL	4.75E+01	ug/g	Jan 1 2001 12:00AM
241-AZ-102	Na	Supernatant	1.72E+05	kg	S	1.14	g/mL	3369	kL	4.90E+04	ug/g	Jan 1 2001 12:00AM
241-AZ-102	Nd	Supernatant	3.41E+01	kg	S	1.14	g/mL	3369	kL	8.86E+00	ug/g	Jan 1 2001 12:00AM
241-AZ-102	Ni	Supernatant	6.82E+00	kg	S	1.14	g/mL	3369	kL	1.77E+00	ug/g	Jan 1 2001 12:00AM
241-AZ-102	NO2	Supernatant	1.09E+05	kg	S	1.14	g/mL	3369	kL	3.11E+04	ug/g	Jan 1 2001 12:00AM
241-AZ-102	NO3	Supernatant	5.70E+04	kg	S	1.14	g/mL	3369	kL	1.62E+04	ug/g	Jan 1 2001 12:00AM
241-AZ-102	OH	Supernatant	6.45E+02	kg	S	1.14	g/mL	3369	kL	1.68E+02	ug/g	Jan 1 2001 12:00AM
241-AZ-102	Oxalate	Sludge	1.49E+03	kg	S	1.41	g/mL	396	kL	2.66E+03	ug/g	Jan 1 2001 12:00AM
241-AZ-102	Oxalate	Supernatant	1.20E+04	kg	S	1.14	g/mL	3369	kL	3.40E+03	ug/g	Jan 1 2001 12:00AM
241-AZ-102	Pb	Supernatant	3.41E+01	kg	S	1.14	g/mL	3369	kL	8.86E+00	ug/g	Jan 1 2001 12:00AM
241-AZ-102	Pd	Supernatant	1.00E+01	kg	S	1.14	g/mL	3369	kL	2.85E+00	ug/g	Jan 1 2001 12:00AM
241-AZ-102	PO4	Supernatant	1.53E+03	kg	S	1.14	g/mL	3369	kL	4.36E+02	ug/g	Jan 1 2001 12:00AM
241-AZ-102	Pr	Supernatant	7.43E-02	kg	S	1.14	g/mL	3369	kL	2.11E-02	ug/g	Jan 1 2001 12:00AM
241-AZ-102	Rb	Supernatant	1.13E+01	kg	S	1.14	g/mL	3369	kL	3.23E+00	ug/g	Jan 1 2001 12:00AM
241-AZ-102	Rh	Supernatant	1.78E+01	kg	S	1.14	g/mL	3369	kL	5.06E+00	ug/g	Jan 1 2001 12:00AM
241-AZ-102	Ru	Supernatant	9.49E+00	kg	S	1.14	g/mL	3369	kL	2.70E+00	ug/g	Jan 1 2001 12:00AM
241-AZ-102	Sb	Supernatant	1.13E-01	kg	S	1.14	g/mL	3369	kL	3.23E-02	ug/g	Jan 1 2001 12:00AM
241-AZ-102	Se	Supernatant	2.22E+01	kg	S	1.14	g/mL	3369	kL	6.31E+00	ug/g	Jan 1 2001 12:00AM

CALCULATION SHEET

PROJECT: RPP-WTP
JOB NO.: 24590
CALC NO.: 24590-WTP-M4C-FRP-00001
SHEET REV: 0A
SHEET NO.: 90

BY: E. Benton
DATE: 12/24/02

SUBJECT: Updated Emissions Run Feed Vector

Best Basis Inventory Data for HLW Phase I Tanks

Tank Name	Analyte	Waste Phase	Inventory	Inventory Units	Basis	Density	Density Units	Volume	Volume Units	Concentration	Concentration Units	Decay Date
241-AY-101	106Ru	Sludge (Solids)	6.53E-02	Ci	M	1.39	g/mL	309	kL	7.64E-05	uCi/g	Jan 1 2001 12:00AM
241-AY-101	113mCd	Sludge (Solids)	1.75E+03	Ci	M	1.39	g/mL	309	kL	2.04E+00	uCi/g	Jan 1 2001 12:00AM
241-AY-101	125Sb	Sludge (Solids)	1.34E+01	Ci	M	1.39	g/mL	309	kL	1.57E-02	uCi/g	Jan 1 2001 12:00AM
241-AY-101	126Sn	Sludge (Solids)	2.80E+01	Ci	S	1.59	g/mL	309	kL	5.70E-02	uCi/g	Jan 1 2001 12:00AM
241-AY-101	129I	Sludge (Solids)	9.40E-02	Ci	M	1.39	g/mL	309	kL	1.10E-04	uCi/g	Jan 1 2001 12:00AM
241-AY-101	137Cs	Sludge (Solids)	5.30E+04	Ci	S	1.59	g/mL	309	kL	1.08E+02	uCi/g	Jan 1 2001 12:00AM
241-AY-101	137mBa	Sludge (Solids)	5.02E+04	Ci	C		g/mL	309	kL		uCi/g	Jan 1 2001 12:00AM
241-AY-101	14C	Sludge (Solids)	8.70E-01	Ci	S	1.59	g/mL	309	kL	1.77E-03	uCi/g	Jan 1 2001 12:00AM
241-AY-101	151Sm	Sludge (Solids)	4.29E+05	Ci	M	1.39	g/mL	309	kL	5.02E+02	uCi/g	Jan 1 2001 12:00AM
241-AY-101	154Eu	Sludge (Solids)	4.69E+03	Ci	S	1.59	g/mL	309	kL	9.55E+00	uCi/g	Jan 1 2001 12:00AM
241-AY-101	155Eu	Sludge (Solids)	2.28E+03	Ci	S	1.59	g/mL	309	kL	4.63E+00	uCi/g	Jan 1 2001 12:00AM
241-AY-101	226Ra	Sludge (Solids)	1.02E-02	Ci	M	1.39	g/mL	309	kL	1.20E-05	uCi/g	Jan 1 2001 12:00AM
241-AY-101	227Ac	Sludge (Solids)	5.69E-02	Ci	M	1.39	g/mL	309	kL	6.65E-05	uCi/g	Jan 1 2001 12:00AM
241-AY-101	228Ra	Sludge (Solids)	4.11E-02	Ci	M	1.39	g/mL	309	kL	4.81E-05	uCi/g	Jan 1 2001 12:00AM
241-AY-101	229Th	Sludge (Solids)	6.53E-04	Ci	M	1.39	g/mL	309	kL	7.64E-07	uCi/g	Jan 1 2001 12:00AM
241-AY-101	231Pa	Sludge (Solids)	7.44E-02	Ci	M	1.39	g/mL	309	kL	8.71E-05	uCi/g	Jan 1 2001 12:00AM
241-AY-101	232Th	Sludge (Solids)	3.82E-02	Ci	S	1.59	g/mL	309	kL	7.78E-05	uCi/g	Jan 1 2001 12:00AM
241-AY-101	232U	Sludge (Solids)	9.37E-02	Ci	C	1.59	g/mL	309	kL	1.91E-04	uCi/g	Jan 1 2001 12:00AM
241-AY-101	233U	Sludge (Solids)	3.85E-01	Ci	C	1.59	g/mL	309	kL	7.84E-04	uCi/g	Jan 1 2001 12:00AM
241-AY-101	234U	Sludge (Solids)	1.71E-01	Ci	C	1.59	g/mL	309	kL	3.48E-04	uCi/g	Jan 1 2001 12:00AM
241-AY-101	235U	Sludge (Solids)	6.94E-03	Ci	C	1.59	g/mL	309	kL	1.41E-05	uCi/g	Jan 1 2001 12:00AM
241-AY-101	236U	Sludge (Solids)	5.87E-03	Ci	C	1.59	g/mL	309	kL	1.19E-05	uCi/g	Jan 1 2001 12:00AM
241-AY-101	237Np	Sludge (Solids)	1.59E-01	Ci	M	1.39	g/mL	309	kL	1.86E-04	uCi/g	Jan 1 2001 12:00AM
241-AY-101	238Pu	Sludge (Solids)	1.91E+02	Ci	S	1.59	g/mL	309	kL	3.89E-01	uCi/g	Jan 1 2001 12:00AM
241-AY-101	238U	Sludge (Solids)	1.56E-01	Ci	C	1.59	g/mL	309	kL	3.17E-04	uCi/g	Jan 1 2001 12:00AM
241-AY-101	239Pu	Sludge (Solids)	4.89E+02	Ci	C	1.59	g/mL	309	kL	9.95E-01	uCi/g	Jan 1 2001 12:00AM
241-AY-101	240Pu	Sludge (Solids)	1.48E+02	Ci	C	1.59	g/mL	309	kL	3.00E-01	uCi/g	Jan 1 2001 12:00AM
241-AY-101	241Am	Sludge (Solids)	8.79E+03	Ci	S	1.59	g/mL	309	kL	1.79E+01	uCi/g	Jan 1 2001 12:00AM
241-AY-101	241Pu	Sludge (Solids)	2.69E+03	Ci	C	1.59	g/mL	309	kL	5.48E+00	uCi/g	Jan 1 2001 12:00AM
241-AY-101	242Cm	Sludge (Solids)	1.17E+01	Ci	C	1.59	g/mL	309	kL	2.37E-02	uCi/g	Jan 1 2001 12:00AM
241-AY-101	242Pu	Sludge (Solids)	2.67E-02	Ci	C	1.59	g/mL	309	kL	5.43E-05	uCi/g	Jan 1 2001 12:00AM
241-AY-101	243Am	Sludge (Solids)	8.83E-01	Ci	C	1.59	g/mL	309	kL	1.80E-03	uCi/g	Jan 1 2001 12:00AM
241-AY-101	243Cm	Sludge (Solids)	1.19E+00	Ci	C	1.59	g/mL	309	kL	2.42E-03	uCi/g	Jan 1 2001 12:00AM
241-AY-101	244Cm	Sludge (Solids)	4.08E+01	Ci	C	1.59	g/mL	309	kL	8.30E-02	uCi/g	Jan 1 2001 12:00AM
241-AY-101	3H	Sludge (Solids)	2.38E+00	Ci	S	1.59	g/mL	309	kL	4.85E-03	uCi/g	Jan 1 2001 12:00AM
241-AY-101	59Ni	Sludge (Solids)	1.58E+02	Ci	M	1.39	g/mL	309	kL	1.85E-01	uCi/g	Jan 1 2001 12:00AM
241-AY-101	60Co	Sludge (Solids)	4.36E+02	Ci	S	1.59	g/mL	309	kL	8.86E-01	uCi/g	Jan 1 2001 12:00AM
241-AY-101	63Ni	Sludge (Solids)	1.48E+04	Ci	M	1.39	g/mL	309	kL	1.74E+01	uCi/g	Jan 1 2001 12:00AM
241-AY-101	79Se	Sludge (Solids)	1.37E+01	Ci	M	1.39	g/mL	309	kL	1.60E-02	uCi/g	Jan 1 2001 12:00AM
241-AY-101	90Sr	Sludge (Solids)	1.38E+06	Ci	S	1.59	g/mL	309	kL	2.81E+03	uCi/g	Jan 1 2001 12:00AM
241-AY-101	90Y	Sludge (Solids)	1.38E+06	Ci	C		g/mL	309	kL		uCi/g	Jan 1 2001 12:00AM
241-AY-101	93mNb	Sludge (Solids)	4.99E+02	Ci	M	1.39	g/mL	309	kL	5.84E-01	uCi/g	Jan 1 2001 12:00AM
241-AY-101	93Zr	Sludge (Solids)	6.09E+02	Ci	M	1.39	g/mL	309	kL	7.13E-01	uCi/g	Jan 1 2001 12:00AM
241-AY-101	99Tc	Sludge (Solids)	4.85E+01	Ci	M	1.39	g/mL	309	kL	5.68E-02	uCi/g	Jan 1 2001 12:00AM
241-AY-101	Ag	Sludge (Solids)	1.17E+02	kg	S	1.59	g/mL	309	kL	2.39E+02	ug/g	Jan 1 2001 12:00AM

CALCULATION SHEET

PROJECT: RPP-WTP
JOB NO.: 24590
CALC NO. 24590-WTP-MMG-FRP-00001
SHEET REV: 0A
SHEET NO.: 51

BY: E. Barnes
DATE: 12/04/07

SUBJECT: Updated Emissions Run Feed Vector

Tank Name	Analyte	Waste Phase	Inventory	Inventory Units	Basis	Density	Density Units	Volume	Volume Units	Concentration	Concentration Units	Decay Date
241-AY-101	Al	Sludge (Solids)	2.71E+04	kg	E	1.59	g/mL	309	kL	5.52E+04	ug/g	Jan 1 2001 12:00AM
241-AY-101	As	Sludge (Solids)	9.37E+00	kg	S	1.59	g/mL	309	kL	1.91E+01	ug/g	Jan 1 2001 12:00AM
241-AY-101	B	Sludge (Solids)	1.21E+02	kg	S	1.59	g/mL	309	kL	2.47E+02	ug/g	Jan 1 2001 12:00AM
241-AY-101	Ba	Sludge (Solids)	2.63E+02	kg	S	1.59	g/mL	309	kL	5.36E+02	ug/g	Jan 1 2001 12:00AM
241-AY-101	Be	Sludge (Solids)	2.17E+00	kg	S	1.59	g/mL	309	kL	4.41E+00	ug/g	Jan 1 2001 12:00AM
241-AY-101	Bi	Sludge (Solids)	2.13E+00	kg	M	1.59	g/mL	309	kL	2.49E+00	ug/g	Jan 1 2001 12:00AM
241-AY-101	Ca	Sludge (Solids)	1.19E+03	kg	S	1.59	g/mL	309	kL	2.43E+03	ug/g	Jan 1 2001 12:00AM
241-AY-101	Cd	Sludge (Solids)	6.18E+01	kg	S	1.59	g/mL	309	kL	1.26E+02	ug/g	Jan 1 2001 12:00AM
241-AY-101	Ce	Sludge (Solids)	2.96E+02	kg	S	1.59	g/mL	309	kL	6.02E+02	ug/g	Jan 1 2001 12:00AM
241-AY-101	Cl	Sludge (Solids)	1.65E+02	kg	S	1.59	g/mL	309	kL	3.36E+02	ug/g	Jan 1 2001 12:00AM
241-AY-101	Co	Sludge (Solids)	1.56E+01	kg	S	1.59	g/mL	309	kL	3.18E+01	ug/g	Jan 1 2001 12:00AM
241-AY-101	Cr	Sludge (Solids)	1.20E+03	kg	S	1.59	g/mL	309	kL	2.44E+03	ug/g	Jan 1 2001 12:00AM
241-AY-101	Cu	Sludge (Solids)	9.75E+01	kg	S	1.59	g/mL	309	kL	1.98E+02	ug/g	Jan 1 2001 12:00AM
241-AY-101	F	Sludge (Solids)	9.48E+02	kg	S	1.59	g/mL	309	kL	1.93E+03	ug/g	Jan 1 2001 12:00AM
241-AY-101	Fe	Sludge (Solids)	3.57E+04	kg	S	1.59	g/mL	309	kL	7.27E+04	ug/g	Jan 1 2001 12:00AM
241-AY-101	Hg	Sludge (Solids)	1.20E+01	kg	S	1.59	g/mL	309	kL	2.44E+01	ug/g	Jan 1 2001 12:00AM
241-AY-101	K	Sludge (Solids)	2.93E+02	kg	S	1.59	g/mL	309	kL	5.96E+02	ug/g	Jan 1 2001 12:00AM
241-AY-101	La	Sludge (Solids)	1.23E+03	kg	S	1.59	g/mL	309	kL	2.51E+03	ug/g	Jan 1 2001 12:00AM
241-AY-101	Li	Sludge (Solids)	2.57E+00	kg	S	1.6	g/mL	309	kL	5.19E+00	ug/g	Jan 1 2001 12:00AM
241-AY-101	Mg	Sludge (Solids)	5.02E+02	kg	S	1.59	g/mL	309	kL	1.02E+03	ug/g	Jan 1 2001 12:00AM
241-AY-101	Mn	Sludge (Solids)	2.04E+03	kg	S	1.59	g/mL	309	kL	4.16E+03	ug/g	Jan 1 2001 12:00AM
241-AY-101	Mo	Sludge (Solids)	1.19E+01	kg	S	1.59	g/mL	309	kL	2.43E+01	ug/g	Jan 1 2001 12:00AM
241-AY-101	Na	Sludge (Solids)	4.78E+04	kg	S	1.59	g/mL	309	kL	9.73E+04	ug/g	Jan 1 2001 12:00AM
241-AY-101	Nd	Sludge (Solids)	7.41E+02	kg	S	1.59	g/mL	309	kL	1.51E+03	ug/g	Jan 1 2001 12:00AM
241-AY-101	NH3	Sludge (Solids)	3.62E+02	kg	S	1.59	g/mL	309	kL	7.38E+02	ug/g	Jan 1 2001 12:00AM
241-AY-101	Ni	Sludge (Solids)	1.33E+03	kg	S	1.59	g/mL	309	kL	2.71E+03	ug/g	Jan 1 2001 12:00AM
241-AY-101	NO2	Sludge (Solids)	1.35E+04	kg	S	1.59	g/mL	309	kL	2.74E+04	ug/g	Jan 1 2001 12:00AM
241-AY-101	NO3	Sludge (Solids)	1.14E+03	kg	S	1.59	g/mL	309	kL	2.31E+03	ug/g	Jan 1 2001 12:00AM
241-AY-101	Oxalate	Sludge (Solids)	1.92E+04	kg	S	1.59	g/mL	309	kL	3.92E+04	ug/g	Jan 1 2001 12:00AM
241-AY-101	Pb	Sludge (Solids)	9.56E+02	kg	S	1.59	g/mL	309	kL	1.94E+03	ug/g	Jan 1 2001 12:00AM
241-AY-101	PO4	Sludge (Solids)	3.45E+03	kg	S	1.59	g/mL	309	kL	7.03E+03	ug/g	Jan 1 2001 12:00AM
241-AY-101	Rb	Sludge (Solids)	5.93E-01	kg	S	1.59	g/mL	309	kL	1.21E+00	ug/g	Jan 1 2001 12:00AM
241-AY-101	Rh	Sludge (Solids)	6.85E+00	kg	S	1.59	g/mL	309	kL	1.39E+01	ug/g	Jan 1 2001 12:00AM
241-AY-101	Sb	Sludge (Solids)	1.18E+01	kg	S	1.6	g/mL	309	kL	2.38E+01	ug/g	Jan 1 2001 12:00AM
241-AY-101	Se	Sludge (Solids)	1.96E+01	kg	S	1.6	g/mL	309	kL	3.97E+01	ug/g	Jan 1 2001 12:00AM
241-AY-101	Si	Sludge (Solids)	4.31E+02	kg	S	1.6	g/mL	309	kL	8.73E+02	ug/g	Jan 1 2001 12:00AM
241-AY-101	SO4	Sludge (Solids)	3.04E+03	kg	S	1.59	g/mL	309	kL	6.18E+03	ug/g	Jan 1 2001 12:00AM
241-AY-101	Sr	Sludge (Solids)	6.68E+01	kg	S	1.59	g/mL	309	kL	1.36E+02	ug/g	Jan 1 2001 12:00AM
241-AY-101	Ti	Sludge (Solids)	3.52E+01	kg	S	1.59	g/mL	309	kL	7.17E+01	ug/g	Jan 1 2001 12:00AM
241-AY-101	TIC as CO3	Sludge (Solids)	8.09E+04	kg	S	1.59	g/mL	309	kL	1.65E+05	ug/g	Jan 1 2001 12:00AM
241-AY-101	Tl	Sludge (Solids)	5.61E-01	kg	S	1.59	g/mL	309	kL	1.14E+00	ug/g	Jan 1 2001 12:00AM
241-AY-101	UTOTAL	Sludge (Solids)	4.67E+02	kg	S	1.59	g/mL	309	kL	9.50E+02	ug/g	Jan 1 2001 12:00AM
241-AY-101	V	Sludge (Solids)	9.80E+00	kg	S	1.6	g/mL	309	kL	1.98E+01	ug/g	Jan 1 2001 12:00AM
241-AY-101	Zn	Sludge (Solids)	5.33E+01	kg	S	1.59	g/mL	309	kL	1.08E+02	ug/g	Jan 1 2001 12:00AM
241-AY-101	Zr	Sludge (Solids)	6.93E+02	kg	S	1.59	g/mL	309	kL	1.41E+03	ug/g	Jan 1 2001 12:00AM
241-AY-102	106Ru	Sludge (Solids)	7.54E-03	Ci	TE	1.62	g/mL	548	kL	8.01E-06	uCi/g	Jan 1 2001 12:00AM

CALCULATION SHEET

PROJECT: BPP-WTP
JOB NO.: 24590
CALC NO.: 24590-WTP-M4C-FRP-00001
SHEET REV: 04
SHEET NO.: 92

BY: E. Barrios
DATE: 12/04/02

SUBJECT: Updated Emissions Run Feed Vector

Tank Name	Analyte	Waste Phase	Inventory	Inventory Units	Basis	Density	Density Units	Volume	Volume Units	Concentration	Concentration Units	Decay Date
241-AY-102	113mCd	Sludge (Solids)	4.83E+00	Ci	TE	1.62	g/mL	548	kL	5.13E-03	uCi/g	Jan 1 2001 12:00AM
241-AY-102	125Sb	Sludge (Solids)	1.55E+00	Ci	TE	1.62	g/mL	548	kL	1.64E-03	uCi/g	Jan 1 2001 12:00AM
241-AY-102	126Sn	Sludge (Solids)	2.78E-01	Ci	TE	1.62	g/mL	548	kL	2.95E-04	uCi/g	Jan 1 2001 12:00AM
241-AY-102	129I	Sludge (Solids)	8.43E-03	Ci	TE	1.62	g/mL	548	kL	8.96E-06	uCi/g	Jan 1 2001 12:00AM
241-AY-102	134Cs	Sludge (Solids)	2.14E+02	Ci	S	1.48	g/mL	548	kL	2.63E-01	uCi/g	Jan 1 2001 12:00AM
241-AY-102	137Cs	Sludge (Solids)	1.61E+05	Ci	S	1.48	g/mL	548	kL	1.99E+02	uCi/g	Jan 1 2001 12:00AM
241-AY-102	137mBa	Sludge (Solids)	1.53E+05	Ci	C		g/mL	548	kL		uCi/g	Jan 1 2001 12:00AM
241-AY-102	14C	Sludge (Solids)	1.74E-01	Ci	S	1.48	g/mL	548	kL	2.15E-04	uCi/g	Jan 1 2001 12:00AM
241-AY-102	151Sm	Sludge (Solids)	1.51E+03	Ci	TE	1.62	g/mL	548	kL	1.60E+00	uCi/g	Jan 1 2001 12:00AM
241-AY-102	152Eu	Sludge (Solids)	6.13E+01	Ci	TE	1.62	g/mL	548	kL	6.52E-02	uCi/g	Jan 1 2001 12:00AM
241-AY-102	154Eu	Sludge (Solids)	6.77E+03	Ci	S	1.48	g/mL	548	kL	8.35E+00	uCi/g	Jan 1 2001 12:00AM
241-AY-102	155Eu	Sludge (Solids)	5.53E+03	Ci	S	1.48	g/mL	548	kL	6.82E+00	uCi/g	Jan 1 2001 12:00AM
241-AY-102	226Ra	Sludge (Solids)	3.66E-03	Ci	TE	1.62	g/mL	548	kL	3.89E-06	uCi/g	Jan 1 2001 12:00AM
241-AY-102	227Ac	Sludge (Solids)	1.29E-02	Ci	TE	1.62	g/mL	548	kL	1.37E-05	uCi/g	Jan 1 2001 12:00AM
241-AY-102	228Ra	Sludge (Solids)	3.42E-02	Ci	TE	1.62	g/mL	548	kL	3.63E-05	uCi/g	Jan 1 2001 12:00AM
241-AY-102	229Th	Sludge (Solids)	6.93E-06	Ci	TE	1.62	g/mL	548	kL	7.37E-09	uCi/g	Jan 1 2001 12:00AM
241-AY-102	231Pa	Sludge (Solids)	3.90E-04	Ci	TE	1.62	g/mL	548	kL	4.15E-07	uCi/g	Jan 1 2001 12:00AM
241-AY-102	232Th	Sludge (Solids)	6.02E-02	Ci	S	1.56	g/mL	548	kL	7.04E-05	uCi/g	Jan 1 2001 12:00AM
241-AY-102	232U	Sludge (Solids)	2.55E-04	Ci	E	1.48	g/mL	548	kL	3.14E-07	uCi/g	Jan 1 2001 12:00AM
241-AY-102	233U	Sludge (Solids)	3.72E-06	Ci	E	1.48	g/mL	548	kL	4.59E-09	uCi/g	Jan 1 2001 12:00AM
241-AY-102	234U	Sludge (Solids)	1.04E+00	Ci	E	1.48	g/mL	548	kL	1.28E-03	uCi/g	Jan 1 2001 12:00AM
241-AY-102	235U	Sludge (Solids)	4.01E-02	Ci	E	1.48	g/mL	548	kL	4.95E-05	uCi/g	Jan 1 2001 12:00AM
241-AY-102	236U	Sludge (Solids)	7.55E-02	Ci	E	1.48	g/mL	548	kL	9.31E-05	uCi/g	Jan 1 2001 12:00AM
241-AY-102	237Np	Sludge (Solids)	3.95E+00	Ci	S	1.56	g/mL	548	kL	4.62E-03	uCi/g	Jan 1 2001 12:00AM
241-AY-102	238Pu	Sludge (Solids)	5.26E+02	Ci	S	1.48	g/mL	548	kL	6.48E-01	uCi/g	Jan 1 2001 12:00AM
241-AY-102	238U	Sludge (Solids)	8.00E-01	Ci	E	1.48	g/mL	548	kL	9.87E-04	uCi/g	Jan 1 2001 12:00AM
241-AY-102	239Pu	Sludge (Solids)	1.64E+03	Ci	E	1.48	g/mL	548	kL	2.02E+00	uCi/g	Jan 1 2001 12:00AM
241-AY-102	240Pu	Sludge (Solids)	3.55E+02	Ci	E	1.48	g/mL	548	kL	4.38E-01	uCi/g	Jan 1 2001 12:00AM
241-AY-102	241Am	Sludge (Solids)	7.62E+03	Ci	E	1.48	g/mL	548	kL	9.40E+00	uCi/g	Jan 1 2001 12:00AM
241-AY-102	241Pu	Sludge (Solids)	4.42E+03	Ci	E	1.48	g/mL	548	kL	5.45E+00	uCi/g	Jan 1 2001 12:00AM
241-AY-102	242Cm	Sludge (Solids)	1.40E+01	Ci	E	1.48	g/mL	548	kL	1.72E-02	uCi/g	Jan 1 2001 12:00AM
241-AY-102	242Pu	Sludge (Solids)	4.27E-02	Ci	E	1.48	g/mL	548	kL	5.26E-05	uCi/g	Jan 1 2001 12:00AM
241-AY-102	243Am	Sludge (Solids)	5.60E-01	Ci	E	1.48	g/mL	548	kL	6.91E-04	uCi/g	Jan 1 2001 12:00AM
241-AY-102	243Cm	Sludge (Solids)	1.27E+00	Ci	E	1.48	g/mL	548	kL	1.57E-03	uCi/g	Jan 1 2001 12:00AM
241-AY-102	244Cm	Sludge (Solids)	3.03E+01	Ci	E	1.48	g/mL	548	kL	3.73E-02	uCi/g	Jan 1 2001 12:00AM
241-AY-102	3H	Sludge (Solids)	7.31E+00	Ci	S	1.48	g/mL	548	kL	9.01E-03	uCi/g	Jan 1 2001 12:00AM
241-AY-102	59Ni	Sludge (Solids)	1.10E+02	Ci	TE	1.62	g/mL	548	kL	1.17E-01	uCi/g	Jan 1 2001 12:00AM
241-AY-102	60Co	Sludge (Solids)	5.81E-01	Ci	TE	1.62	g/mL	548	kL	6.17E-04	uCi/g	Jan 1 2001 12:00AM
241-AY-102	63Ni	Sludge (Solids)	1.04E+04	Ci	TE	1.62	g/mL	548	kL	1.10E+01	uCi/g	Jan 1 2001 12:00AM
241-AY-102	79Se	Sludge (Solids)	4.39E-02	Ci	TE	1.62	g/mL	548	kL	4.67E-05	uCi/g	Jan 1 2001 12:00AM
241-AY-102	90Sr	Sludge (Solids)	5.27E+06	Ci	S	1.48	g/mL	548	kL	6.50E+03	uCi/g	Jan 1 2001 12:00AM
241-AY-102	90Y	Sludge (Solids)	5.27E+06	Ci	C		g/mL	548	kL		uCi/g	Jan 1 2001 12:00AM
241-AY-102	93mNb	Sludge (Solids)	1.70E+00	Ci	TE	1.62	g/mL	548	kL	1.81E-03	uCi/g	Jan 1 2001 12:00AM
241-AY-102	93Zr	Sludge (Solids)	1.98E+00	Ci	TE	1.62	g/mL	548	kL	2.10E-03	uCi/g	Jan 1 2001 12:00AM
241-AY-102	99Tc	Sludge (Solids)	1.39E+01	Ci	S	1.48	g/mL	548	kL	1.72E-02	uCi/g	Jan 1 2001 12:00AM
241-AY-102	Ag	Sludge (Solids)	2.52E+01	kg	S	1.45	g/mL	548	kL	3.18E+01	ug/g	Jan 1 2001 12:00AM
241-AY-102	Al	Sludge (Solids)	3.87E+04	kg	S	1.45	g/mL	548	kL	4.87E+04	ug/g	Jan 1 2001 12:00AM

CALCULATION SHEET

PROJECT: BPP-WTP
JOB NO.: 24590
CALC NO.: 24590-WTP-MMC-FRP-00001
SHEET REV: 0A
SHEET NO.: 93

BY: E. Barrios
DATE: 12/04/02

SUBJECT: Updated Emissions Run Feed Vector

Tank Name	Analyte	Waste Phase	Inventory	Inventory Units	Basis	Density	Density Units	Volume	Volume Units	Concentration	Concentration Units	Decay Date
241-AY-102	As	Sludge (Solids)	2.09E+01	kg	S	1.56	g/mL	548	kL	2.45E+01	ug/g	Jan 1 2001 12:00AM
241-AY-102	B	Sludge (Solids)	3.52E+01	kg	S	1.45	g/mL	548	kL	4.44E+01	ug/g	Jan 1 2001 12:00AM
241-AY-102	Ba	Sludge (Solids)	6.84E+02	kg	S	1.45	g/mL	548	kL	8.61E+02	ug/g	Jan 1 2001 12:00AM
241-AY-102	Be	Sludge (Solids)	2.63E+00	kg	S	1.56	g/mL	548	kL	3.07E+00	ug/g	Jan 1 2001 12:00AM
241-AY-102	Bi	Sludge (Solids)	1.52E+02	kg	S	1.45	g/mL	548	kL	1.91E+02	ug/g	Jan 1 2001 12:00AM
241-AY-102	Ca	Sludge (Solids)	4.59E+03	kg	S	1.45	g/mL	548	kL	5.78E+03	ug/g	Jan 1 2001 12:00AM
241-AY-102	Cd	Sludge (Solids)	1.03E+02	kg	S	1.45	g/mL	548	kL	1.29E+02	ug/g	Jan 1 2001 12:00AM
241-AY-102	Ce	Sludge (Solids)	7.13E+02	kg	S	1.45	g/mL	548	kL	8.98E+02	ug/g	Jan 1 2001 12:00AM
241-AY-102	Cl	Sludge (Solids)	1.24E+02	kg	S	1.45	g/mL	548	kL	1.56E+02	ug/g	Jan 1 2001 12:00AM
241-AY-102	Co	Sludge (Solids)	2.37E+01	kg	S	1.45	g/mL	548	kL	2.99E+01	ug/g	Jan 1 2001 12:00AM
241-AY-102	Cr	Sludge (Solids)	1.48E+03	kg	S	1.45	g/mL	548	kL	1.86E+03	ug/g	Jan 1 2001 12:00AM
241-AY-102	Cu	Sludge (Solids)	2.01E+02	kg	S	1.45	g/mL	548	kL	2.54E+02	ug/g	Jan 1 2001 12:00AM
241-AY-102	F	Sludge (Solids)	2.49E+02	kg	S	1.45	g/mL	548	kL	3.13E+02	ug/g	Jan 1 2001 12:00AM
241-AY-102	Fe	Sludge (Solids)	8.69E+04	kg	S	1.45	g/mL	548	kL	1.09E+05	ug/g	Jan 1 2001 12:00AM
241-AY-102	Hg	Sludge (Solids)	1.13E+02	kg	S	1.48	g/mL	548	kL	1.39E+02	ug/g	Jan 1 2001 12:00AM
241-AY-102	K	Sludge (Solids)	5.23E+02	kg	S	1.45	g/mL	548	kL	6.58E+02	ug/g	Jan 1 2001 12:00AM
241-AY-102	La	Sludge (Solids)	1.12E+03	kg	S	1.45	g/mL	548	kL	1.42E+03	ug/g	Jan 1 2001 12:00AM
241-AY-102	Li	Sludge (Solids)	4.34E+01	kg	S	1.45	g/mL	548	kL	5.46E+01	ug/g	Jan 1 2001 12:00AM
241-AY-102	Mg	Sludge (Solids)	1.74E+03	kg	S	1.45	g/mL	548	kL	2.19E+03	ug/g	Jan 1 2001 12:00AM
241-AY-102	Mn	Sludge (Solids)	1.15E+04	kg	S	1.45	g/mL	548	kL	1.45E+04	ug/g	Jan 1 2001 12:00AM
241-AY-102	Mo	Sludge (Solids)	9.17E+00	kg	S	1.56	g/mL	548	kL	1.07E+01	ug/g	Jan 1 2001 12:00AM
241-AY-102	Na	Sludge (Solids)	5.33E+04	kg	S	1.45	g/mL	548	kL	6.71E+04	ug/g	Jan 1 2001 12:00AM
241-AY-102	Nd	Sludge (Solids)	1.02E+03	kg	S	1.45	g/mL	548	kL	1.28E+03	ug/g	Jan 1 2001 12:00AM
241-AY-102	NH3	Sludge (Solids)	1.63E+03	kg	S	1.48	g/mL	548	kL	2.01E+03	ug/g	Jan 1 2001 12:00AM
241-AY-102	Ni	Sludge (Solids)	2.11E+03	kg	S	1.45	g/mL	548	kL	2.65E+03	ug/g	Jan 1 2001 12:00AM
241-AY-102	NO2	Sludge (Solids)	5.16E+01	kg	S	1.45	g/mL	548	kL	6.50E+01	ug/g	Jan 1 2001 12:00AM
241-AY-102	NO3	Sludge (Solids)	2.91E+01	kg	S	1.45	g/mL	548	kL	3.66E+01	ug/g	Jan 1 2001 12:00AM
241-AY-102	Oxalate	Sludge (Solids)	1.77E+03	kg	S	1.45	g/mL	548	kL	2.23E+03	ug/g	Jan 1 2001 12:00AM
241-AY-102	Pb	Sludge (Solids)	3.52E+03	kg	S	1.45	g/mL	548	kL	4.43E+03	ug/g	Jan 1 2001 12:00AM
241-AY-102	PO4	Sludge (Solids)	9.04E+03	kg	S	1.45	g/mL	548	kL	1.14E+04	ug/g	Jan 1 2001 12:00AM
241-AY-102	Pr	Sludge (Solids)	3.01E+02	kg	S	1.56	g/mL	548	kL	3.52E+02	ug/g	Jan 1 2001 12:00AM
241-AY-102	Ru	Sludge (Solids)	4.36E+02	kg	S	1.56	g/mL	548	kL	5.11E+02	ug/g	Jan 1 2001 12:00AM
241-AY-102	Sb	Sludge (Solids)	2.38E+00	kg	S	1.56	g/mL	548	kL	2.78E+00	ug/g	Jan 1 2001 12:00AM
241-AY-102	Se	Sludge (Solids)	5.02E-01	kg	S	1.56	g/mL	548	kL	5.87E-01	ug/g	Jan 1 2001 12:00AM
241-AY-102	Si	Sludge (Solids)	1.13E+02	kg	S	1.45	g/mL	548	kL	1.42E+02	ug/g	Jan 1 2001 12:00AM
241-AY-102	SO4	Sludge (Solids)	1.51E+03	kg	S	1.45	g/mL	548	kL	1.91E+03	ug/g	Jan 1 2001 12:00AM
241-AY-102	Sr	Sludge (Solids)	2.28E+02	kg	S	1.45	g/mL	548	kL	2.88E+02	ug/g	Jan 1 2001 12:00AM
241-AY-102	Te	Sludge (Solids)	9.48E+01	kg	S	1.56	g/mL	548	kL	1.11E+02	ug/g	Jan 1 2001 12:00AM
241-AY-102	Th	Sludge (Solids)	4.53E+02	kg	S	1.48	g/mL	548	kL	5.58E+02	ug/g	Jan 1 2001 12:00AM
241-AY-102	Ti	Sludge (Solids)	1.10E+02	kg	S	1.45	g/mL	548	kL	1.38E+02	ug/g	Jan 1 2001 12:00AM
241-AY-102	TIC as CO3	Sludge (Solids)	5.45E+04	kg	S	1.45	g/mL	548	kL	6.86E+04	ug/g	Jan 1 2001 12:00AM
241-AY-102	Tl	Sludge (Solids)	2.96E+00	kg	S	1.56	g/mL	548	kL	3.46E+00	ug/g	Jan 1 2001 12:00AM
241-AY-102	UTOTAL	Sludge (Solids)	2.35E+03	kg	S	1.45	g/mL	548	kL	2.96E+03	ug/g	Jan 1 2001 12:00AM
241-AY-102	V	Sludge (Solids)	2.98E+01	kg	S	1.48	g/mL	548	kL	3.67E+01	ug/g	Jan 1 2001 12:00AM
241-AY-102	Y	Sludge (Solids)	9.81E+01	kg	S	1.48	g/mL	548	kL	1.21E+02	ug/g	Jan 1 2001 12:00AM
241-AY-102	Zn	Sludge (Solids)	1.52E+02	kg	S	1.45	g/mL	548	kL	1.91E+02	ug/g	Jan 1 2001 12:00AM

CALCULATION SHEET

PROJECT: RPP-WTP
JOB NO.: 24590
CALC NO.: 24590-WTP-M4C-FRP-00001
SHEET REV: 0A
SHEET NO.: 94

BY: E. Barrios
DATE: 12/04/02

SUBJECT: Updated Emissions Run Feed Vector

Tank Name	Analyte	Waste Phase	Inventory	Inventory Units	Basis	Density	Density Units	Volume	Volume Units	Concentration	Concentration Units	Decay Date
241-AY-102	Zr	Sludge (Solids)	2.86E+01	kg	S	1.45	g/mL	548	kL	3.60E+01	ug/g	Jan 1 2001 12:00AM
241-AZ-101	106Ru	Sludge (Solids)	3.86E+02	Ci	S	1.67	g/mL	173	kL	1.66E+00	uCi/g	Jan 1 2001 12:00AM
241-AZ-101	113mCd	Sludge (Solids)	1.93E+03	Ci	TE	1.51	g/mL	173	kL	8.96E+00	uCi/g	Jan 1 2001 12:00AM
241-AZ-101	125Sb	Sludge (Solids)	6.18E+03	Ci	S	1.68	g/mL	173	kL	2.13E+01	uCi/g	Jan 1 2001 12:00AM
241-AZ-101	126Sn	Sludge (Solids)	2.31E+01	Ci	S	1.68	g/mL	173	kL	7.94E-02	uCi/g	Jan 1 2001 12:00AM
241-AZ-101	129I	Sludge (Solids)	1.17E-01	Ci	TE	1.51	g/mL	173	kL	5.40E-04	uCi/g	Jan 1 2001 12:00AM
241-AZ-101	134Cs	Sludge (Solids)	2.81E+02	Ci	S	1.68	g/mL	173	kL	9.67E-01	uCi/g	Jan 1 2001 12:00AM
241-AZ-101	137Cs	Sludge (Solids)	2.98E+05	Ci	S	1.68	g/mL	173	kL	1.02E+03	uCi/g	Jan 1 2001 12:00AM
241-AZ-101	137mBa	Sludge (Solids)	2.82E+05	Ci	C		g/mL	173	kL		uCi/g	Jan 1 2001 12:00AM
241-AZ-101	14C	Sludge (Solids)	4.72E-01	Ci	S	1.68	g/mL	173	kL	1.62E-03	uCi/g	Jan 1 2001 12:00AM
241-AZ-101	151Sm	Sludge (Solids)	1.60E+05	Ci	TE	1.51	g/mL	173	kL	7.42E+02	uCi/g	Jan 1 2001 12:00AM
241-AZ-101	152Eu	Sludge (Solids)	1.31E+02	Ci	TE	1.51	g/mL	173	kL	6.07E-01	uCi/g	Jan 1 2001 12:00AM
241-AZ-101	154Eu	Sludge (Solids)	1.35E+04	Ci	S	1.68	g/mL	173	kL	4.63E+01	uCi/g	Jan 1 2001 12:00AM
241-AZ-101	155Eu	Sludge (Solids)	1.74E+04	Ci	S	1.68	g/mL	173	kL	6.00E+01	uCi/g	Jan 1 2001 12:00AM
241-AZ-101	226Ra	Sludge (Solids)	2.32E-04	Ci	TE	1.51	g/mL	173	kL	1.08E-06	uCi/g	Jan 1 2001 12:00AM
241-AZ-101	227Ac	Sludge (Solids)	2.61E-03	Ci	TE	1.51	g/mL	173	kL	1.21E-05	uCi/g	Jan 1 2001 12:00AM
241-AZ-101	228Ra	Sludge (Solids)	3.11E-03	Ci	TE	1.51	g/mL	173	kL	1.44E-05	uCi/g	Jan 1 2001 12:00AM
241-AZ-101	229Th	Sludge (Solids)	1.94E-06	Ci	TE	1.51	g/mL	173	kL	8.97E-09	uCi/g	Jan 1 2001 12:00AM
241-AZ-101	231Pa	Sludge (Solids)	7.77E-03	Ci	TE	1.51	g/mL	173	kL	3.60E-05	uCi/g	Jan 1 2001 12:00AM
241-AZ-101	232Th	Sludge (Solids)	8.12E-03	Ci	S	1.68	g/mL	173	kL	2.79E-05	uCi/g	Jan 1 2001 12:00AM
241-AZ-101	232U	Sludge (Solids)	2.77E-02	Ci	C	1.68	g/mL	173	kL	9.53E-05	uCi/g	Jan 1 2001 12:00AM
241-AZ-101	233U	Sludge (Solids)	1.13E-01	Ci	C	1.68	g/mL	173	kL	3.89E-04	uCi/g	Jan 1 2001 12:00AM
241-AZ-101	234U	Sludge (Solids)	7.86E-01	Ci	C	1.68	g/mL	173	kL	2.71E-03	uCi/g	Jan 1 2001 12:00AM
241-AZ-101	235U	Sludge (Solids)	2.99E-02	Ci	C	1.68	g/mL	173	kL	1.03E-04	uCi/g	Jan 1 2001 12:00AM
241-AZ-101	236U	Sludge (Solids)	6.37E-02	Ci	C	1.68	g/mL	173	kL	2.19E-04	uCi/g	Jan 1 2001 12:00AM
241-AZ-101	237Np	Sludge (Solids)	1.34E+01	Ci	S	1.68	g/mL	173	kL	4.60E-02	uCi/g	Jan 1 2001 12:00AM
241-AZ-101	238Pu	Sludge (Solids)	1.33E+02	Ci	C	1.68	g/mL	173	kL	4.56E-01	uCi/g	Jan 1 2001 12:00AM
241-AZ-101	238U	Sludge (Solids)	5.44E-01	Ci	C	1.68	g/mL	173	kL	1.87E-03	uCi/g	Jan 1 2001 12:00AM
241-AZ-101	239Pu	Sludge (Solids)	1.15E+03	Ci	C	1.68	g/mL	173	kL	3.95E+00	uCi/g	Jan 1 2001 12:00AM
241-AZ-101	240Pu	Sludge (Solids)	3.46E+02	Ci	C	1.68	g/mL	173	kL	1.19E+00	uCi/g	Jan 1 2001 12:00AM
241-AZ-101	241Am	Sludge (Solids)	2.55E+04	Ci	S	1.68	g/mL	173	kL	8.79E+01	uCi/g	Jan 1 2001 12:00AM
241-AZ-101	241Pu	Sludge (Solids)	1.02E+04	Ci	C	1.68	g/mL	173	kL	3.51E+01	uCi/g	Jan 1 2001 12:00AM
241-AZ-101	242Cm	Sludge (Solids)	2.30E+01	Ci	C	1.68	g/mL	173	kL	7.90E-02	uCi/g	Jan 1 2001 12:00AM
241-AZ-101	242Pu	Sludge (Solids)	5.35E-02	Ci	C	1.68	g/mL	173	kL	1.84E-04	uCi/g	Jan 1 2001 12:00AM
241-AZ-101	243Am	Sludge (Solids)	5.40E+00	Ci	C	1.68	g/mL	173	kL	1.86E-02	uCi/g	Jan 1 2001 12:00AM
241-AZ-101	243Cm	Sludge (Solids)	3.36E+00	Ci	C	1.68	g/mL	173	kL	1.15E-02	uCi/g	Jan 1 2001 12:00AM
241-AZ-101	244Cm	Sludge (Solids)	7.53E+01	Ci	C	1.68	g/mL	173	kL	2.59E-01	uCi/g	Jan 1 2001 12:00AM
241-AZ-101	3H	Sludge (Solids)	4.05E+00	Ci	S	1.68	g/mL	173	kL	1.39E-02	uCi/g	Jan 1 2001 12:00AM
241-AZ-101	59Ni	Sludge (Solids)	2.68E+01	Ci	TE	1.51	g/mL	173	kL	1.24E-01	uCi/g	Jan 1 2001 12:00AM
241-AZ-101	60Co	Sludge (Solids)	1.09E+03	Ci	S	1.68	g/mL	173	kL	3.73E+00	uCi/g	Jan 1 2001 12:00AM
241-AZ-101	63Ni	Sludge (Solids)	2.95E+03	Ci	TE	1.51	g/mL	173	kL	1.37E+01	uCi/g	Jan 1 2001 12:00AM
241-AZ-101	79Se	Sludge (Solids)	4.67E-01	Ci	S	1.67	g/mL	173	kL	2.00E-03	uCi/g	Jan 1 2001 12:00AM
241-AZ-101	90Sr	Sludge (Solids)	4.94E+06	Ci	S	1.68	g/mL	173	kL	1.70E+04	uCi/g	Jan 1 2001 12:00AM
241-AZ-101	90Y	Sludge (Solids)	4.94E+06	Ci	C		g/mL	173	kL		uCi/g	Jan 1 2001 12:00AM
241-AZ-101	93mNb	Sludge (Solids)	1.33E+02	Ci	TE	1.51	g/mL	173	kL	6.17E-01	uCi/g	Jan 1 2001 12:00AM
241-AZ-101	93Zr	Sludge (Solids)	2.35E+02	Ci	TE	1.51	g/mL	173	kL	1.09E+00	uCi/g	Jan 1 2001 12:00AM
241-AZ-101	99Tc	Sludge (Solids)	6.41E+01	Ci	S	1.68	g/mL	173	kL	2.21E-01	uCi/g	Jan 1 2001 12:00AM

CALCULATION SHEET

PROJECT: BPP-WTP
JOB NO.: 24590
CALC NO.: 24590-WTP-M4C-FRP-00001
SHEET REV: 06
SHEET NO.: 95

BY: E. Berrios
DATE: 12/04/02

SUBJECT: Updated Emissions Run Feed Vector

Tank Name	Analyte	Waste Phase	Inventory	Inventory Units	Basis	Density	Density Units	Volume	Volume Units	Concentration	Concentration Units	Decay Date
241-AZ-101	Ag	Sludge (Solids)	4.88E+01	kg	S	1.68	g/mL	173	kL	1.68E+02	ug/g	Jan 1 2001 12:00AM
241-AZ-101	Al	Sludge (Solids)	1.61E+04	kg	S	1.68	g/mL	173	kL	5.55E+04	ug/g	Jan 1 2001 12:00AM
241-AZ-101	As	Sludge (Solids)	1.73E+01	kg	S	1.68	g/mL	173	kL	5.95E+01	ug/g	Jan 1 2001 12:00AM
241-AZ-101	B	Sludge (Solids)	7.83E+01	kg	S	1.68	g/mL	173	kL	2.69E+02	ug/g	Jan 1 2001 12:00AM
241-AZ-101	Ba	Sludge (Solids)	1.94E+02	kg	S	1.68	g/mL	173	kL	6.67E+02	ug/g	Jan 1 2001 12:00AM
241-AZ-101	Be	Sludge (Solids)	2.75E+00	kg	S	1.68	g/mL	173	kL	9.45E+00	ug/g	Jan 1 2001 12:00AM
241-AZ-101	Bi	Sludge (Solids)	1.97E+01	kg	S	1.68	g/mL	173	kL	6.80E+01	ug/g	Jan 1 2001 12:00AM
241-AZ-101	Cd	Sludge (Solids)	1.88E+03	kg	S	1.68	g/mL	173	kL	6.49E+03	ug/g	Jan 1 2001 12:00AM
241-AZ-101	Ce	Sludge (Solids)	2.30E+02	kg	S	1.68	g/mL	173	kL	7.91E+02	ug/g	Jan 1 2001 12:00AM
241-AZ-101	Cl	Sludge (Solids)	2.92E+01	kg	S	1.67	g/mL	173	kL	1.25E+02	ug/g	Jan 1 2001 12:00AM
241-AZ-101	Co	Sludge (Solids)	1.23E+01	kg	S	1.68	g/mL	173	kL	4.23E+01	ug/g	Jan 1 2001 12:00AM
241-AZ-101	Cr	Sludge (Solids)	1.64E+02	kg	S	1.68	g/mL	173	kL	5.65E+02	ug/g	Jan 1 2001 12:00AM
241-AZ-101	Cu	Sludge (Solids)	6.37E+01	kg	S	1.68	g/mL	173	kL	2.19E+02	ug/g	Jan 1 2001 12:00AM
241-AZ-101	F	Sludge (Solids)	1.41E+03	kg	S	1.68	g/mL	173	kL	4.84E+03	ug/g	Jan 1 2001 12:00AM
241-AZ-101	Fe	Sludge (Solids)	2.21E+04	kg	S	1.68	g/mL	173	kL	7.61E+04	ug/g	Jan 1 2001 12:00AM
241-AZ-101	Hg	Sludge (Solids)	5.58E-01	kg	S	1.68	g/mL	173	kL	1.92E+00	ug/g	Jan 1 2001 12:00AM
241-AZ-101	K	Sludge (Solids)	9.56E+02	kg	S	1.68	g/mL	173	kL	3.29E+03	ug/g	Jan 1 2001 12:00AM
241-AZ-101	La	Sludge (Solids)	9.85E+02	kg	S	1.68	g/mL	173	kL	3.39E+03	ug/g	Jan 1 2001 12:00AM
241-AZ-101	Li	Sludge (Solids)	1.70E+02	kg	S	1.68	g/mL	173	kL	5.85E+02	ug/g	Jan 1 2001 12:00AM
241-AZ-101	Mg	Sludge (Solids)	1.78E+02	kg	S	1.68	g/mL	173	kL	6.14E+02	ug/g	Jan 1 2001 12:00AM
241-AZ-101	Mn	Sludge (Solids)	2.84E+02	kg	S	1.68	g/mL	173	kL	9.78E+02	ug/g	Jan 1 2001 12:00AM
241-AZ-101	Mo	Sludge (Solids)	1.23E+01	kg	S	1.68	g/mL	173	kL	4.21E+01	ug/g	Jan 1 2001 12:00AM
241-AZ-101	Na	Sludge (Solids)	2.63E+04	kg	S	1.68	g/mL	173	kL	9.05E+04	ug/g	Jan 1 2001 12:00AM
241-AZ-101	Nd	Sludge (Solids)	5.99E+02	kg	S	1.68	g/mL	173	kL	2.06E+03	ug/g	Jan 1 2001 12:00AM
241-AZ-101	Ni	Sludge (Solids)	1.37E+03	kg	S	1.68	g/mL	173	kL	4.70E+03	ug/g	Jan 1 2001 12:00AM
241-AZ-101	NO2	Sludge (Solids)	1.10E+04	kg	S	1.68	g/mL	173	kL	3.78E+04	ug/g	Jan 1 2001 12:00AM
241-AZ-101	NO3	Sludge (Solids)	1.03E+04	kg	S	1.68	g/mL	173	kL	3.56E+04	ug/g	Jan 1 2001 12:00AM
241-AZ-101	OH	Sludge (Solids)	1.39E+03	kg	S	1.68	g/mL	173	kL	4.80E+03	ug/g	Jan 1 2001 12:00AM
241-AZ-101	Oxalate	Sludge (Solids)	1.47E+03	kg	S	1.68	g/mL	173	kL	5.08E+03	ug/g	Jan 1 2001 12:00AM
241-AZ-101	Pb	Sludge (Solids)	8.57E+01	kg	S	1.68	g/mL	173	kL	2.95E+02	ug/g	Jan 1 2001 12:00AM
241-AZ-101	Pd	Sludge (Solids)	3.74E-04	kg	S	1.67	g/mL	173	kL	1.60E-03	ug/g	Jan 1 2001 12:00AM
241-AZ-101	PO4	Sludge (Solids)	1.06E+02	kg	S	1.68	g/mL	173	kL	3.64E+02	ug/g	Jan 1 2001 12:00AM
241-AZ-101	Pr	Sludge (Solids)	1.28E+02	kg	S	1.68	g/mL	173	kL	4.40E+02	ug/g	Jan 1 2001 12:00AM
241-AZ-101	Rb	Sludge (Solids)	3.74E+00	kg	S	1.68	g/mL	173	kL	1.29E+01	ug/g	Jan 1 2001 12:00AM
241-AZ-101	Rh	Sludge (Solids)	4.70E+01	kg	S	1.68	g/mL	173	kL	1.62E+02	ug/g	Jan 1 2001 12:00AM
241-AZ-101	Ru	Sludge (Solids)	3.79E+02	kg	S	1.68	g/mL	173	kL	1.30E+03	ug/g	Jan 1 2001 12:00AM
241-AZ-101	Sb	Sludge (Solids)	2.15E+00	kg	S	1.68	g/mL	173	kL	7.40E+00	ug/g	Jan 1 2001 12:00AM
241-AZ-101	Se	Sludge (Solids)	7.16E+00	kg	S	1.68	g/mL	173	kL	2.46E+01	ug/g	Jan 1 2001 12:00AM
241-AZ-101	Si	Sludge (Solids)	4.47E+02	kg	S	1.68	g/mL	173	kL	1.54E+03	ug/g	Jan 1 2001 12:00AM
241-AZ-101	SO4	Sludge (Solids)	7.59E+03	kg	S	1.68	g/mL	173	kL	2.61E+04	ug/g	Jan 1 2001 12:00AM
241-AZ-101	Sr	Sludge (Solids)	9.17E+01	kg	S	1.68	g/mL	173	kL	3.16E+02	ug/g	Jan 1 2001 12:00AM
241-AZ-101	Ta	Sludge (Solids)	2.15E+00	kg	S	1.68	g/mL	173	kL	7.40E+00	ug/g	Jan 1 2001 12:00AM
241-AZ-101	Te	Sludge (Solids)	2.36E+01	kg	S	1.68	g/mL	173	kL	8.14E+01	ug/g	Jan 1 2001 12:00AM
241-AZ-101	Th	Sludge (Solids)	7.78E+01	kg	S	1.68	g/mL	173	kL	2.68E+02	ug/g	Jan 1 2001 12:00AM
241-AZ-101	Ti	Sludge (Solids)	9.62E+00	kg	S	1.68	g/mL	173	kL	3.31E+01	ug/g	Jan 1 2001 12:00AM
241-AZ-101	TIC as CO3	Sludge (Solids)	7.50E+03	kg	S	1.68	g/mL	173	kL	2.58E+04	ug/g	Jan 1 2001 12:00AM

CALCULATION SHEET

PROJECT: RPP-WTP
JOB NO.: 24590
CALC NO.: 24590-WTP-MHC-FRP-00001
SHEET REV: 0A
SHEET NO.: 99

BY: E. Berriss
DATE: 12/04/02

SUBJECT: Updated Emissions Run Feed Vector

Tank Name	Analyte	Waste Phase	Inventory	Inventory Units	Basis	Density	Density Units	Volume	Volume Units	Concentration	Concentration Units	Decay Date
241-AZ-101	Tl	Sludge (Solids)	2.15E+00	kg	S	1.68	g/mL	173	kL	7.40E+00	ug/g	Jan 1 2001 12:00AM
241-AZ-101	UTOTAL	Sludge (Solids)	1.63E+03	kg	S	1.68	g/mL	173	kL	5.62E+03	ug/g	Jan 1 2001 12:00AM
241-AZ-101	V	Sludge (Solids)	5.35E+00	kg	S	1.67	g/mL	173	kL	2.29E+01	ug/g	Jan 1 2001 12:00AM
241-AZ-101	Zn	Sludge (Solids)	2.56E+01	kg	S	1.68	g/mL	173	kL	8.81E+01	ug/g	Jan 1 2001 12:00AM
241-AZ-101	Zr	Sludge (Solids)	7.85E+03	kg	S	1.68	g/mL	173	kL	2.70E+04	ug/g	Jan 1 2001 12:00AM
241-AZ-102	106Ru	Sludge	6.21E+02	Ci	E	1.47	g/mL	396	kL	1.06E+00	uCi/g	Jan 1 2001 12:00AM
241-AZ-102	113mCd	Sludge	8.16E+02	Ci	E	1.47	g/mL	396	kL	1.40E+00	uCi/g	Jan 1 2001 12:00AM
241-AZ-102	125Sb	Sludge	4.93E+03	Ci	S	1.41	g/mL	396	kL	8.83E+00	uCi/g	Jan 1 2001 12:00AM
241-AZ-102	126Sn	Sludge	1.25E+01	Ci	E	1.47	g/mL	396	kL	2.14E-02	uCi/g	Jan 1 2001 12:00AM
241-AZ-102	129I	Sludge	1.40E+00	Ci	E	1.47	g/mL	396	kL	2.40E-03	uCi/g	Jan 1 2001 12:00AM
241-AZ-102	134Cs	Sludge	4.47E+02	Ci	S	1.41	g/mL	396	kL	8.00E-01	uCi/g	Jan 1 2001 12:00AM
241-AZ-102	137Cs	Sludge	4.92E+05	Ci	S	1.41	g/mL	396	kL	8.82E+02	uCi/g	Jan 1 2001 12:00AM
241-AZ-102	137mBa	Sludge	4.66E+05	Ci	C		g/mL	396	kL		uCi/g	Jan 1 2001 12:00AM
241-AZ-102	14C	Sludge	4.80E-01	Ci	S	1.41	g/mL	396	kL	8.60E-04	uCi/g	Jan 1 2001 12:00AM
241-AZ-102	151Sm	Sludge	6.69E+04	Ci	E	1.47	g/mL	396	kL	1.15E+02	uCi/g	Jan 1 2001 12:00AM
241-AZ-102	152Eu	Sludge	5.23E+01	Ci	E	1.47	g/mL	396	kL	8.96E-02	uCi/g	Jan 1 2001 12:00AM
241-AZ-102	154Eu	Sludge	7.29E+03	Ci	S	1.41	g/mL	396	kL	1.31E+01	uCi/g	Jan 1 2001 12:00AM
241-AZ-102	155Eu	Sludge	1.30E+04	Ci	S	1.41	g/mL	396	kL	2.33E+01	uCi/g	Jan 1 2001 12:00AM
241-AZ-102	226Ra	Sludge	8.50E-05	Ci	E	1.47	g/mL	396	kL	1.46E-07	uCi/g	Jan 1 2001 12:00AM
241-AZ-102	227Ac	Sludge	7.40E-04	Ci	E	1.47	g/mL	396	kL	1.27E-06	uCi/g	Jan 1 2001 12:00AM
241-AZ-102	228Ra	Sludge	5.30E-03	Ci	E	1.47	g/mL	396	kL	9.07E-06	uCi/g	Jan 1 2001 12:00AM
241-AZ-102	229Th	Sludge	6.83E-07	Ci	E	1.47	g/mL	396	kL	1.17E-09	uCi/g	Jan 1 2001 12:00AM
241-AZ-102	231Pa	Sludge	1.77E-03	Ci	E	1.47	g/mL	396	kL	3.03E-06	uCi/g	Jan 1 2001 12:00AM
241-AZ-102	232Th	Sludge	9.83E-03	Ci	S	1.41	g/mL	396	kL	1.76E-05	uCi/g	Jan 1 2001 12:00AM
241-AZ-102	232U	Sludge	1.07E-02	Ci	C	1.41	g/mL	396	kL	1.92E-05	uCi/g	Jan 1 2001 12:00AM
241-AZ-102	233U	Sludge	4.17E-02	Ci	C	1.41	g/mL	396	kL	7.47E-05	uCi/g	Jan 1 2001 12:00AM
241-AZ-102	234U	Sludge	2.89E+00	Ci	C	1.41	g/mL	396	kL	5.17E-03	uCi/g	Jan 1 2001 12:00AM
241-AZ-102	235U	Sludge	6.88E-02	Ci	C	1.41	g/mL	396	kL	1.23E-04	uCi/g	Jan 1 2001 12:00AM
241-AZ-102	236U	Sludge	1.41E-01	Ci	C	1.41	g/mL	396	kL	2.52E-04	uCi/g	Jan 1 2001 12:00AM
241-AZ-102	237Np	Sludge	1.31E+01	Ci	S	1.41	g/mL	396	kL	2.34E-02	uCi/g	Jan 1 2001 12:00AM
241-AZ-102	238Pu	Sludge	1.79E+02	Ci	C	1.41	g/mL	396	kL	3.20E-01	uCi/g	Jan 1 2001 12:00AM
241-AZ-102	238U	Sludge	1.16E+00	Ci	C	1.41	g/mL	396	kL	2.09E-03	uCi/g	Jan 1 2001 12:00AM
241-AZ-102	239Pu	Sludge	1.54E+03	Ci	C	1.41	g/mL	396	kL	2.75E+00	uCi/g	Jan 1 2001 12:00AM
241-AZ-102	240Pu	Sludge	4.58E+02	Ci	C	1.41	g/mL	396	kL	8.20E-01	uCi/g	Jan 1 2001 12:00AM
241-AZ-102	241Am	Sludge	1.88E+04	Ci	S	1.41	g/mL	396	kL	3.36E+01	uCi/g	Jan 1 2001 12:00AM
241-AZ-102	241Pu	Sludge	1.32E+04	Ci	C	1.41	g/mL	396	kL	2.36E+01	uCi/g	Jan 1 2001 12:00AM
241-AZ-102	242Cm	Sludge	6.52E+00	Ci	C	1.41	g/mL	396	kL	1.17E-02	uCi/g	Jan 1 2001 12:00AM
241-AZ-102	242Pu	Sludge	6.57E-02	Ci	C	1.41	g/mL	396	kL	1.18E-04	uCi/g	Jan 1 2001 12:00AM
241-AZ-102	243Am	Sludge	5.61E+00	Ci	C	1.41	g/mL	396	kL	1.00E-02	uCi/g	Jan 1 2001 12:00AM
241-AZ-102	243Cm	Sludge	8.39E-01	Ci	C	1.41	g/mL	396	kL	1.50E-03	uCi/g	Jan 1 2001 12:00AM
241-AZ-102	244Cm	Sludge	4.08E+01	Ci	C	1.41	g/mL	396	kL	7.31E-02	uCi/g	Jan 1 2001 12:00AM
241-AZ-102	3H	Sludge	1.22E+01	Ci	S	1.41	g/mL	396	kL	2.19E-02	uCi/g	Jan 1 2001 12:00AM
241-AZ-102	59Ni	Sludge	1.07E+01	Ci	E	1.47	g/mL	396	kL	1.84E-02	uCi/g	Jan 1 2001 12:00AM
241-AZ-102	60Co	Sludge	7.80E+02	Ci	S	1.41	g/mL	396	kL	1.40E+00	uCi/g	Jan 1 2001 12:00AM
241-AZ-102	63Ni	Sludge	1.19E+03	Ci	E	1.47	g/mL	396	kL	2.01E+00	uCi/g	Jan 1 2001 12:00AM
241-AZ-102	79Se	Sludge	3.51E-01	Ci	S	1.41	g/mL	396	kL	6.29E-04	uCi/g	Jan 1 2001 12:00AM
241-AZ-102	90Sr	Sludge	2.98E+06	Ci	S	1.41	g/mL	396	kL	5.34E+03	uCi/g	Jan 1 2001 12:00AM

CALCULATION SHEET

PROJECT: RPP-WTP
JOB NO.: 24590
CALC NO.: 24590-WTP-M4C-FRP-00001
SHEET REV: 0A
SHEET NO.: 98

BY: E. Berrios
DATE: 12/04/02

SUBJECT: Updated Emissions Run Feed Vector

Tank Name	Analyte	Waste Phase	Inventory	Inventory Units	Basis	Density	Density Units	Volume	Volume Units	Concentration	Concentration Units	Decay Date
241-AZ-102	Te	Sludge	1.54E+01	kg	S	1.41	g/mL	396	kL	2.76E+01	ug/g	Jan 1 2001 12:00AM
241-AZ-102	Th	Sludge	8.93E+01	kg	S	1.41	g/mL	396	kL	1.60E+02	ug/g	Jan 1 2001 12:00AM
241-AZ-102	Ti	Sludge	1.06E+01	kg	S	1.41	g/mL	396	kL	1.90E+01	ug/g	Jan 1 2001 12:00AM
241-AZ-102	TIC as CO3	Sludge	1.90E+04	kg	S	1.41	g/mL	396	kL	3.40E+04	ug/g	Jan 1 2001 12:00AM
241-AZ-102	Tl	Sludge	6.53E-01	kg	S	1.41	g/mL	396	kL	1.17E+00	ug/g	Jan 1 2001 12:00AM
241-AZ-102	UTOTAL	Sludge	3.50E+03	kg	S	1.41	g/mL	396	kL	6.27E+03	ug/g	Jan 1 2001 12:00AM
241-AZ-102	V	Sludge	8.32E+00	kg	S	1.41	g/mL	396	kL	1.49E+01	ug/g	Jan 1 2001 12:00AM
241-AZ-102	W	Sludge	4.84E+00	kg	S	1.41	g/mL	396	kL	8.66E+00	ug/g	Jan 1 2001 12:00AM
241-AZ-102	Y	Sludge	3.41E+01	kg	S	1.41	g/mL	396	kL	6.10E+01	ug/g	Jan 1 2001 12:00AM
241-AZ-102	Zn	Sludge	2.45E+01	kg	S	1.41	g/mL	396	kL	4.39E+01	ug/g	Jan 1 2001 12:00AM
241-AZ-102	Zr	Sludge	3.81E+03	kg	S	1.41	g/mL	396	kL	6.83E+03	ug/g	Jan 1 2001 12:00AM
241-C-104	106Ru	Sludge	4.06E-07	Ci	TS	1.71	g/mL	227	kL	1.45E-09	uCi/g	Jan 1 2001 12:00AM
241-C-104	106Ru	Sludge	1.80E-05	Ci	TE	1.29	g/mL	88	kL	8.40E-08	uCi/g	Jan 1 2001 12:00AM
241-C-104	106Ru	Sludge	0.00E+00	Ci	TE	1.69	g/mL	103	kL	0.00E+00	uCi/g	Jan 1 2001 12:00AM
241-C-104	106Ru	Sludge	2.04E-06	Ci	TE	1.25	g/mL	80	kL	1.03E-08	uCi/g	Jan 1 2001 12:00AM
241-C-104	106Ru	Sludge	1.60E-04	Ci	M	1.46	g/mL	150	kL	5.66E-07	uCi/g	Jan 1 2001 12:00AM
241-C-104	106Ru	Sludge	4.16E-09	Ci	TS	1.49	g/mL	332	kL	8.76E-12	uCi/g	Jan 1 2001 12:00AM
241-C-104	113mCd	Sludge	1.85E+01	Ci	M	1.46	g/mL	150	kL	6.55E-02	uCi/g	Jan 1 2001 12:00AM
241-C-104	113mCd	Sludge	1.63E-01	Ci	TS	1.49	g/mL	332	kL	3.43E-04	uCi/g	Jan 1 2001 12:00AM
241-C-104	113mCd	Sludge	7.56E-02	Ci	TS	1.71	g/mL	227	kL	2.70E-04	uCi/g	Jan 1 2001 12:00AM
241-C-104	113mCd	Sludge	2.36E-01	Ci	TE	1.29	g/mL	88	kL	1.10E-03	uCi/g	Jan 1 2001 12:00AM
241-C-104	113mCd	Sludge	3.34E-01	Ci	TE	1.25	g/mL	80	kL	1.69E-03	uCi/g	Jan 1 2001 12:00AM
241-C-104	113mCd	Sludge	0.00E+00	Ci	TE	1.69	g/mL	103	kL	0.00E+00	uCi/g	Jan 1 2001 12:00AM
241-C-104	125Sb	Sludge	2.71E+01	Ci	S	1.69	g/mL	150	kL	1.07E-01	uCi/g	Jan 1 2001 12:00AM
241-C-104	125Sb	Sludge	5.99E+01	Ci	S	1.69	g/mL	332	kL	1.07E-01	uCi/g	Jan 1 2001 12:00AM
241-C-104	125Sb	Sludge	4.10E+01	Ci	S	1.69	g/mL	227	kL	1.07E-01	uCi/g	Jan 1 2001 12:00AM
241-C-104	125Sb	Sludge	1.59E+01	Ci	S	1.69	g/mL	88	kL	1.07E-01	uCi/g	Jan 1 2001 12:00AM
241-C-104	125Sb	Sludge	1.86E+01	Ci	S	1.69	g/mL	103	kL	1.07E-01	uCi/g	Jan 1 2001 12:00AM
241-C-104	125Sb	Sludge	1.44E+01	Ci	S	1.69	g/mL	80	kL	1.07E-01	uCi/g	Jan 1 2001 12:00AM
241-C-104	126Sn	Sludge	1.67E+00	Ci	M	1.46	g/mL	150	kL	5.92E-03	uCi/g	Jan 1 2001 12:00AM
241-C-104	126Sn	Sludge	8.22E-03	Ci	TS	1.49	g/mL	332	kL	1.73E-05	uCi/g	Jan 1 2001 12:00AM
241-C-104	126Sn	Sludge	2.82E-03	Ci	TS	1.71	g/mL	227	kL	1.01E-05	uCi/g	Jan 1 2001 12:00AM
241-C-104	126Sn	Sludge	7.58E-03	Ci	TE	1.29	g/mL	88	kL	3.54E-05	uCi/g	Jan 1 2001 12:00AM
241-C-104	126Sn	Sludge	0.00E+00	Ci	TE	1.69	g/mL	103	kL	0.00E+00	uCi/g	Jan 1 2001 12:00AM
241-C-104	126Sn	Sludge	2.83E-02	Ci	TE	1.25	g/mL	80	kL	1.43E-04	uCi/g	Jan 1 2001 12:00AM
241-C-104	129I	Sludge	1.15E-01	Ci	S	1.69	g/mL	150	kL	4.55E-04	uCi/g	Jan 1 2001 12:00AM
241-C-104	129I	Sludge	2.55E-01	Ci	S	1.69	g/mL	332	kL	4.55E-04	uCi/g	Jan 1 2001 12:00AM
241-C-104	129I	Sludge	1.75E-01	Ci	S	1.69	g/mL	227	kL	4.55E-04	uCi/g	Jan 1 2001 12:00AM
241-C-104	129I	Sludge	6.77E-02	Ci	S	1.69	g/mL	88	kL	4.55E-04	uCi/g	Jan 1 2001 12:00AM
241-C-104	129I	Sludge	7.92E-02	Ci	S	1.69	g/mL	103	kL	4.55E-04	uCi/g	Jan 1 2001 12:00AM
241-C-104	129I	Sludge	6.15E-02	Ci	S	1.69	g/mL	80	kL	4.55E-04	uCi/g	Jan 1 2001 12:00AM
241-C-104	134Cs	Sludge	1.21E-02	Ci	M	1.46	g/mL	150	kL	4.28E-05	uCi/g	Jan 1 2001 12:00AM
241-C-104	134Cs	Sludge	1.98E-04	Ci	TS	1.49	g/mL	332	kL	4.17E-07	uCi/g	Jan 1 2001 12:00AM
241-C-104	134Cs	Sludge	1.04E-03	Ci	TS	1.71	g/mL	227	kL	3.72E-06	uCi/g	Jan 1 2001 12:00AM
241-C-104	134Cs	Sludge	2.02E-02	Ci	TE	1.29	g/mL	88	kL	9.44E-05	uCi/g	Jan 1 2001 12:00AM
241-C-104	134Cs	Sludge	0.00E+00	Ci	TE	1.69	g/mL	103	kL	0.00E+00	uCi/g	Jan 1 2001 12:00AM

CALCULATION SHEET

PROJECT: RPP-WTP
JOB NO.: 24590
CALC NO.: 24590-WTP-MC-FRP-00001
SHEET REV: 0A
SHEET NO.: 99

BY: E. Benton
DATE: 12/04/02

SUBJECT: Updated Emissions Run Feed Vector

Tank Name	Analyte	Waste Phase	Inventory	Inventory Units	Basis	Density	Density Units	Volume	Volume Units	Concentration	Concentration Units	Decay Date
241-C-104	134Cs	Sludge	1.14E-02	Ci	TE	1.25	g/mL	80	kL	5.77E-05	uCi/g	Jan 1 2001 12:00AM
241-C-104	137Cs	Sludge	1.46E+04	Ci	S	1.69	g/mL	150	kL	5.77E+01	uCi/g	Jan 1 2001 12:00AM
241-C-104	137Cs	Sludge	3.24E+04	Ci	S	1.69	g/mL	332	kL	5.77E+01	uCi/g	Jan 1 2001 12:00AM
241-C-104	137Cs	Sludge	2.21E+04	Ci	S	1.69	g/mL	227	kL	5.77E+01	uCi/g	Jan 1 2001 12:00AM
241-C-104	137Cs	Sludge	8.57E+03	Ci	S	1.69	g/mL	88	kL	5.77E+01	uCi/g	Jan 1 2001 12:00AM
241-C-104	137Cs	Sludge	1.00E+04	Ci	S	1.69	g/mL	103	kL	5.77E+01	uCi/g	Jan 1 2001 12:00AM
241-C-104	137Cs	Sludge	7.80E+03	Ci	S	1.69	g/mL	80	kL	5.77E+01	uCi/g	Jan 1 2001 12:00AM
241-C-104	137mBa	Sludge	1.38E+04	Ci	C		g/mL	150	kL		uCi/g	Jan 1 2001 12:00AM
241-C-104	137mBa	Sludge	3.06E+04	Ci	C		g/mL	332	kL		uCi/g	Jan 1 2001 12:00AM
241-C-104	137mBa	Sludge	2.09E+04	Ci	C		g/mL	227	kL		uCi/g	Jan 1 2001 12:00AM
241-C-104	137mBa	Sludge	8.11E+03	Ci	C		g/mL	88	kL		uCi/g	Jan 1 2001 12:00AM
241-C-104	137mBa	Sludge	9.49E+03	Ci	C		g/mL	103	kL		uCi/g	Jan 1 2001 12:00AM
241-C-104	137mBa	Sludge	7.37E+03	Ci	C		g/mL	80	kL		uCi/g	Jan 1 2001 12:00AM
241-C-104	14C	Sludge	2.84E-01	Ci	S	1.69	g/mL	150	kL	1.12E-03	uCi/g	Jan 1 2001 12:00AM
241-C-104	14C	Sludge	6.28E-01	Ci	S	1.69	g/mL	332	kL	1.12E-03	uCi/g	Jan 1 2001 12:00AM
241-C-104	14C	Sludge	4.30E-01	Ci	S	1.69	g/mL	227	kL	1.12E-03	uCi/g	Jan 1 2001 12:00AM
241-C-104	14C	Sludge	1.67E-01	Ci	S	1.69	g/mL	88	kL	1.12E-03	uCi/g	Jan 1 2001 12:00AM
241-C-104	14C	Sludge	1.95E-01	Ci	S	1.69	g/mL	103	kL	1.12E-03	uCi/g	Jan 1 2001 12:00AM
241-C-104	14C	Sludge	1.51E-01	Ci	S	1.69	g/mL	80	kL	1.12E-03	uCi/g	Jan 1 2001 12:00AM
241-C-104	151Sm	Sludge	9.23E+03	Ci	M	1.46	g/mL	150	kL	3.27E+01	uCi/g	Jan 1 2001 12:00AM
241-C-104	151Sm	Sludge	4.50E+01	Ci	TS	1.49	g/mL	332	kL	9.48E-02	uCi/g	Jan 1 2001 12:00AM
241-C-104	151Sm	Sludge	1.58E+01	Ci	TS	1.71	g/mL	227	kL	5.64E-02	uCi/g	Jan 1 2001 12:00AM
241-C-104	151Sm	Sludge	2.74E+01	Ci	TE	1.29	g/mL	88	kL	1.28E-01	uCi/g	Jan 1 2001 12:00AM
241-C-104	151Sm	Sludge	0.00E+00	Ci	TE	1.69	g/mL	103	kL	0.00E+00	uCi/g	Jan 1 2001 12:00AM
241-C-104	151Sm	Sludge	7.20E+01	Ci	TE	1.25	g/mL	80	kL	3.64E-01	uCi/g	Jan 1 2001 12:00AM
241-C-104	152Eu	Sludge	1.81E+00	Ci	M	1.46	g/mL	150	kL	6.40E-03	uCi/g	Jan 1 2001 12:00AM
241-C-104	152Eu	Sludge	6.81E-02	Ci	TS	1.49	g/mL	332	kL	1.43E-04	uCi/g	Jan 1 2001 12:00AM
241-C-104	152Eu	Sludge	1.22E-01	Ci	TS	1.71	g/mL	227	kL	4.38E-04	uCi/g	Jan 1 2001 12:00AM
241-C-104	152Eu	Sludge	2.75E-01	Ci	TE	1.29	g/mL	88	kL	1.28E-03	uCi/g	Jan 1 2001 12:00AM
241-C-104	152Eu	Sludge	0.00E+00	Ci	TE	1.69	g/mL	103	kL	0.00E+00	uCi/g	Jan 1 2001 12:00AM
241-C-104	152Eu	Sludge	1.55E-01	Ci	TE	1.25	g/mL	80	kL	7.84E-04	uCi/g	Jan 1 2001 12:00AM
241-C-104	154Eu	Sludge	1.68E+02	Ci	S	1.69	g/mL	150	kL	6.61E-01	uCi/g	Jan 1 2001 12:00AM
241-C-104	154Eu	Sludge	3.71E+02	Ci	S	1.69	g/mL	332	kL	6.61E-01	uCi/g	Jan 1 2001 12:00AM
241-C-104	154Eu	Sludge	2.54E+02	Ci	S	1.69	g/mL	227	kL	6.61E-01	uCi/g	Jan 1 2001 12:00AM
241-C-104	154Eu	Sludge	9.84E+01	Ci	S	1.69	g/mL	88	kL	6.61E-01	uCi/g	Jan 1 2001 12:00AM
241-C-104	154Eu	Sludge	1.15E+02	Ci	S	1.69	g/mL	103	kL	6.61E-01	uCi/g	Jan 1 2001 12:00AM
241-C-104	154Eu	Sludge	8.94E+01	Ci	S	1.69	g/mL	80	kL	6.61E-01	uCi/g	Jan 1 2001 12:00AM
241-C-104	155Eu	Sludge	1.23E+02	Ci	S	1.69	g/mL	150	kL	4.86E-01	uCi/g	Jan 1 2001 12:00AM
241-C-104	155Eu	Sludge	2.73E+02	Ci	S	1.69	g/mL	332	kL	4.86E-01	uCi/g	Jan 1 2001 12:00AM
241-C-104	155Eu	Sludge	1.86E+02	Ci	S	1.69	g/mL	227	kL	4.86E-01	uCi/g	Jan 1 2001 12:00AM
241-C-104	155Eu	Sludge	7.23E+01	Ci	S	1.69	g/mL	88	kL	4.86E-01	uCi/g	Jan 1 2001 12:00AM
241-C-104	155Eu	Sludge	8.46E+01	Ci	S	1.69	g/mL	103	kL	4.86E-01	uCi/g	Jan 1 2001 12:00AM
241-C-104	155Eu	Sludge	6.57E+01	Ci	S	1.69	g/mL	80	kL	4.86E-01	uCi/g	Jan 1 2001 12:00AM
241-C-104	226Ra	Sludge	8.42E-04	Ci	M	1.46	g/mL	150	kL	2.98E-06	uCi/g	Jan 1 2001 12:00AM
241-C-104	226Ra	Sludge	1.16E-06	Ci	TS	1.49	g/mL	332	kL	2.44E-09	uCi/g	Jan 1 2001 12:00AM
241-C-104	226Ra	Sludge	2.98E-07	Ci	TS	1.71	g/mL	227	kL	1.07E-09	uCi/g	Jan 1 2001 12:00AM
241-C-104	226Ra	Sludge	2.52E-07	Ci	TE	1.29	g/mL	88	kL	1.18E-09	uCi/g	Jan 1 2001 12:00AM

CALCULATION SHEET

PROJECT: RPP-WTP
JOB NO.: 24590
CALC NO.: 24590-WTP-M4C-FRP-00001
SHEET REV: 0A
SHEET NO.: 100

BY: E. Berrios
DATE: 12/04/02

SUBJECT: Updated Emissions Run Feed Vector

Tank Name	Analyte	Waste Phase	Inventory	Inventory Units	Basis	Density	Density Units	Volume	Volume Units	Concentration	Concentration Units	Decay Date
241-C-104	226Ra	Sludge	0.00E+00	Ci	TE	1.69	g/mL	103	kL	0.00E+00	uCi/g	Jan 1 2001 12:00AM
241-C-104	226Ra	Sludge	5.43E-03	Ci	TE	1.25	g/mL	80	kL	2.74E-05	uCi/g	Jan 1 2001 12:00AM
241-C-104	227Ac	Sludge	1.20E+01	Ci	M	1.46	g/mL	150	kL	4.26E-02	uCi/g	Jan 1 2001 12:00AM
241-C-104	227Ac	Sludge	7.94E-06	Ci	TS	1.49	g/mL	332	kL	1.67E-08	uCi/g	Jan 1 2001 12:00AM
241-C-104	227Ac	Sludge	4.83E-02	Ci	TS	1.71	g/mL	227	kL	1.73E-04	uCi/g	Jan 1 2001 12:00AM
241-C-104	227Ac	Sludge	1.87E-06	Ci	TE	1.29	g/mL	88	kL	8.71E-09	uCi/g	Jan 1 2001 12:00AM
241-C-104	227Ac	Sludge	0.00E+00	Ci	TE	1.69	g/mL	103	kL	0.00E+00	uCi/g	Jan 1 2001 12:00AM
241-C-104	227Ac	Sludge	9.68E+01	Ci	TE	1.25	g/mL	80	kL	4.89E-01	uCi/g	Jan 1 2001 12:00AM
241-C-104	228Ra	Sludge	3.84E+00	Ci	M	1.46	g/mL	150	kL	1.36E-02	uCi/g	Jan 1 2001 12:00AM
241-C-104	228Ra	Sludge	4.69E-11	Ci	TS	1.49	g/mL	332	kL	9.88E-14	uCi/g	Jan 1 2001 12:00AM
241-C-104	228Ra	Sludge	7.32E-03	Ci	TS	1.71	g/mL	227	kL	2.62E-05	uCi/g	Jan 1 2001 12:00AM
241-C-104	228Ra	Sludge	6.03E-11	Ci	TE	1.29	g/mL	88	kL	2.81E-13	uCi/g	Jan 1 2001 12:00AM
241-C-104	228Ra	Sludge	0.00E+00	Ci	TE	1.69	g/mL	103	kL	0.00E+00	uCi/g	Jan 1 2001 12:00AM
241-C-104	228Ra	Sludge	1.87E+01	Ci	TE	1.25	g/mL	80	kL	9.45E-02	uCi/g	Jan 1 2001 12:00AM
241-C-104	229Th	Sludge	8.53E-02	Ci	M	1.46	g/mL	150	kL	3.02E-04	uCi/g	Jan 1 2001 12:00AM
241-C-104	229Th	Sludge	1.61E-08	Ci	TS	1.49	g/mL	332	kL	3.40E-11	uCi/g	Jan 1 2001 12:00AM
241-C-104	229Th	Sludge	6.51E-03	Ci	TS	1.71	g/mL	227	kL	2.33E-05	uCi/g	Jan 1 2001 12:00AM
241-C-104	229Th	Sludge	1.15E-08	Ci	TE	1.29	g/mL	88	kL	5.38E-11	uCi/g	Jan 1 2001 12:00AM
241-C-104	229Th	Sludge	0.00E+00	Ci	TE	1.69	g/mL	103	kL	0.00E+00	uCi/g	Jan 1 2001 12:00AM
241-C-104	229Th	Sludge	8.49E-01	Ci	TE	1.25	g/mL	80	kL	4.29E-03	uCi/g	Jan 1 2001 12:00AM
241-C-104	231Pa	Sludge	2.16E+01	Ci	M	1.46	g/mL	150	kL	7.66E-02	uCi/g	Jan 1 2001 12:00AM
241-C-104	231Pa	Sludge	1.52E-05	Ci	TS	1.49	g/mL	332	kL	3.20E-08	uCi/g	Jan 1 2001 12:00AM
241-C-104	231Pa	Sludge	6.51E-02	Ci	TS	1.71	g/mL	227	kL	2.33E-04	uCi/g	Jan 1 2001 12:00AM
241-C-104	231Pa	Sludge	4.07E-06	Ci	TE	1.29	g/mL	88	kL	1.90E-08	uCi/g	Jan 1 2001 12:00AM
241-C-104	231Pa	Sludge	0.00E+00	Ci	TE	1.69	g/mL	103	kL	0.00E+00	uCi/g	Jan 1 2001 12:00AM
241-C-104	231Pa	Sludge	2.18E+02	Ci	TE	1.25	g/mL	80	kL	1.10E+00	uCi/g	Jan 1 2001 12:00AM
241-C-104	232Th	Sludge	8.54E-01	Ci	S	1.69	g/mL	150	kL	3.37E-03	uCi/g	Jan 1 2001 12:00AM
241-C-104	232Th	Sludge	1.89E+00	Ci	S	1.69	g/mL	332	kL	3.37E-03	uCi/g	Jan 1 2001 12:00AM
241-C-104	232Th	Sludge	1.29E+00	Ci	S	1.69	g/mL	227	kL	3.37E-03	uCi/g	Jan 1 2001 12:00AM
241-C-104	232Th	Sludge	5.01E-01	Ci	S	1.69	g/mL	88	kL	3.37E-03	uCi/g	Jan 1 2001 12:00AM
241-C-104	232Th	Sludge	5.87E-01	Ci	S	1.69	g/mL	103	kL	3.37E-03	uCi/g	Jan 1 2001 12:00AM
241-C-104	232Th	Sludge	4.56E-01	Ci	S	1.69	g/mL	80	kL	3.37E-03	uCi/g	Jan 1 2001 12:00AM
241-C-104	232U	Sludge	2.38E+00	Ci	C	1.69	g/mL	150	kL	1.13E-02	uCi/g	Jan 1 2001 12:00AM
241-C-104	232U	Sludge	1.03E-04	Ci	TS	1.49	g/mL	332	kL	2.16E-07	uCi/g	Jan 1 2001 12:00AM
241-C-104	232U	Sludge	1.09E-02	Ci	TS	1.71	g/mL	227	kL	3.90E-05	uCi/g	Jan 1 2001 12:00AM
241-C-104	232U	Sludge	6.69E-04	Ci	TE	1.29	g/mL	88	kL	3.12E-06	uCi/g	Jan 1 2001 12:00AM
241-C-104	232U	Sludge	9.47E+00	Ci	TE	1.69	g/mL	103	kL	6.40E-02	uCi/g	Jan 1 2001 12:00AM
241-C-104	232U	Sludge	7.48E+00	Ci	TE	1.25	g/mL	80	kL	3.78E-02	uCi/g	Jan 1 2001 12:00AM
241-C-104	233U	Sludge	6.32E+01	Ci	S	1.69	g/mL	150	kL	2.49E-01	uCi/g	Jan 1 2001 12:00AM
241-C-104	233U	Sludge	1.40E+02	Ci	S	1.69	g/mL	332	kL	2.49E-01	uCi/g	Jan 1 2001 12:00AM
241-C-104	233U	Sludge	9.57E+01	Ci	S	1.69	g/mL	227	kL	2.49E-01	uCi/g	Jan 1 2001 12:00AM
241-C-104	233U	Sludge	3.71E+01	Ci	S	1.69	g/mL	88	kL	2.49E-01	uCi/g	Jan 1 2001 12:00AM
241-C-104	233U	Sludge	4.34E+01	Ci	S	1.69	g/mL	103	kL	2.49E-01	uCi/g	Jan 1 2001 12:00AM
241-C-104	233U	Sludge	3.37E+01	Ci	S	1.69	g/mL	80	kL	2.49E-01	uCi/g	Jan 1 2001 12:00AM
241-C-104	234U	Sludge	3.18E+00	Ci	S	1.69	g/mL	150	kL	1.26E-02	uCi/g	Jan 1 2001 12:00AM
241-C-104	234U	Sludge	7.04E+00	Ci	S	1.69	g/mL	332	kL	1.26E-02	uCi/g	Jan 1 2001 12:00AM
241-C-104	234U	Sludge	4.81E+00	Ci	S	1.69	g/mL	227	kL	1.26E-02	uCi/g	Jan 1 2001 12:00AM

CALCULATION SHEET

PROJECT: RPP-WTP
JOB NO.: 24590
CALC NO.: 24590-WTP-MC-FRP-00001
SHEET REV: 0A
SHEET NO.: 101

BY: E. Benios
DATE: 12/04/02

SUBJECT: Updated Emissions Run Feed Vector

Tank Name	Analyte	Waste Phase	Inventory	Inventory Units	Basis	Density	Density Units	Volume	Volume Units	Concentration	Concentration Units	Decay Date
241-C-104	234U	Sludge	1.87E+00	Ci	S	1.69	g/mL	88	kL	1.26E-02	uCi/g	Jan 1 2001 12:00AM
241-C-104	234U	Sludge	2.18E+00	Ci	S	1.69	g/mL	103	kL	1.26E-02	uCi/g	Jan 1 2001 12:00AM
241-C-104	234U	Sludge	1.70E+00	Ci	S	1.69	g/mL	80	kL	1.26E-02	uCi/g	Jan 1 2001 12:00AM
241-C-104	235U	Sludge	1.40E-01	Ci	S	1.69	g/mL	227	kL	3.64E-04	uCi/g	Jan 1 2001 12:00AM
241-C-104	235U	Sludge	5.41E-02	Ci	S	1.69	g/mL	88	kL	3.64E-04	uCi/g	Jan 1 2001 12:00AM
241-C-104	235U	Sludge	6.34E-02	Ci	S	1.69	g/mL	103	kL	3.64E-04	uCi/g	Jan 1 2001 12:00AM
241-C-104	235U	Sludge	4.92E-02	Ci	S	1.69	g/mL	80	kL	3.64E-04	uCi/g	Jan 1 2001 12:00AM
241-C-104	235U	Sludge	9.23E-02	Ci	S	1.69	g/mL	150	kL	3.64E-04	uCi/g	Jan 1 2001 12:00AM
241-C-104	235U	Sludge	2.04E-01	Ci	S	1.69	g/mL	332	kL	3.64E-04	uCi/g	Jan 1 2001 12:00AM
241-C-104	236U	Sludge	1.05E-01	Ci	S	1.69	g/mL	150	kL	4.13E-04	uCi/g	Jan 1 2001 12:00AM
241-C-104	236U	Sludge	2.32E-01	Ci	S	1.69	g/mL	332	kL	4.13E-04	uCi/g	Jan 1 2001 12:00AM
241-C-104	236U	Sludge	1.58E-01	Ci	S	1.69	g/mL	227	kL	4.13E-04	uCi/g	Jan 1 2001 12:00AM
241-C-104	236U	Sludge	6.14E-02	Ci	S	1.69	g/mL	88	kL	4.13E-04	uCi/g	Jan 1 2001 12:00AM
241-C-104	236U	Sludge	7.19E-02	Ci	S	1.69	g/mL	103	kL	4.13E-04	uCi/g	Jan 1 2001 12:00AM
241-C-104	236U	Sludge	5.58E-02	Ci	S	1.69	g/mL	80	kL	4.13E-04	uCi/g	Jan 1 2001 12:00AM
241-C-104	237Np	Sludge	6.72E-01	Ci	S	1.69	g/mL	150	kL	2.65E-03	uCi/g	Jan 1 2001 12:00AM
241-C-104	237Np	Sludge	1.49E+00	Ci	S	1.69	g/mL	332	kL	2.65E-03	uCi/g	Jan 1 2001 12:00AM
241-C-104	237Np	Sludge	1.02E+00	Ci	S	1.69	g/mL	227	kL	2.65E-03	uCi/g	Jan 1 2001 12:00AM
241-C-104	237Np	Sludge	3.94E-01	Ci	S	1.69	g/mL	88	kL	2.65E-03	uCi/g	Jan 1 2001 12:00AM
241-C-104	237Np	Sludge	4.61E-01	Ci	S	1.69	g/mL	103	kL	2.65E-03	uCi/g	Jan 1 2001 12:00AM
241-C-104	237Np	Sludge	3.58E-01	Ci	S	1.69	g/mL	80	kL	2.65E-03	uCi/g	Jan 1 2001 12:00AM
241-C-104	238Pu	Sludge	3.48E+01	Ci	C	1.69	g/mL	150	kL	6.10E-02	uCi/g	Jan 1 2001 12:00AM
241-C-104	238Pu	Sludge	7.71E+01	Ci	C	1.69	g/mL	332	kL	6.10E-02	uCi/g	Jan 1 2001 12:00AM
241-C-104	238Pu	Sludge	5.27E+01	Ci	C	1.69	g/mL	227	kL	6.10E-02	uCi/g	Jan 1 2001 12:00AM
241-C-104	238Pu	Sludge	2.04E+01	Ci	C	1.69	g/mL	88	kL	6.10E-02	uCi/g	Jan 1 2001 12:00AM
241-C-104	238Pu	Sludge	2.39E+01	Ci	C	1.69	g/mL	103	kL	6.10E-02	uCi/g	Jan 1 2001 12:00AM
241-C-104	238Pu	Sludge	1.86E+01	Ci	C	1.69	g/mL	80	kL	6.10E-02	uCi/g	Jan 1 2001 12:00AM
241-C-104	238U	Sludge	1.79E+00	Ci	S	1.69	g/mL	150	kL	7.08E-03	uCi/g	Jan 1 2001 12:00AM
241-C-104	238U	Sludge	3.97E+00	Ci	S	1.69	g/mL	332	kL	7.08E-03	uCi/g	Jan 1 2001 12:00AM
241-C-104	238U	Sludge	2.72E+00	Ci	S	1.69	g/mL	227	kL	7.08E-03	uCi/g	Jan 1 2001 12:00AM
241-C-104	238U	Sludge	1.05E+00	Ci	S	1.69	g/mL	88	kL	7.08E-03	uCi/g	Jan 1 2001 12:00AM
241-C-104	238U	Sludge	1.23E+00	Ci	S	1.69	g/mL	103	kL	7.08E-03	uCi/g	Jan 1 2001 12:00AM
241-C-104	238U	Sludge	9.57E-01	Ci	S	1.69	g/mL	80	kL	7.08E-03	uCi/g	Jan 1 2001 12:00AM
241-C-104	239Pu	Sludge	8.38E+02	Ci	C	1.69	g/mL	150	kL	1.42E+00	uCi/g	Jan 1 2001 12:00AM
241-C-104	239Pu	Sludge	1.85E+03	Ci	C	1.69	g/mL	332	kL	1.42E+00	uCi/g	Jan 1 2001 12:00AM
241-C-104	239Pu	Sludge	1.27E+03	Ci	C	1.69	g/mL	227	kL	1.42E+00	uCi/g	Jan 1 2001 12:00AM
241-C-104	239Pu	Sludge	4.91E+02	Ci	C	1.69	g/mL	88	kL	1.42E+00	uCi/g	Jan 1 2001 12:00AM
241-C-104	239Pu	Sludge	5.75E+02	Ci	C	1.69	g/mL	103	kL	1.42E+00	uCi/g	Jan 1 2001 12:00AM
241-C-104	239Pu	Sludge	4.47E+02	Ci	C	1.69	g/mL	80	kL	1.42E+00	uCi/g	Jan 1 2001 12:00AM
241-C-104	240Pu	Sludge	1.65E+02	Ci	C	1.69	g/mL	150	kL	2.79E-01	uCi/g	Jan 1 2001 12:00AM
241-C-104	240Pu	Sludge	3.65E+02	Ci	C	1.69	g/mL	332	kL	2.79E-01	uCi/g	Jan 1 2001 12:00AM
241-C-104	240Pu	Sludge	2.49E+02	Ci	C	1.69	g/mL	227	kL	2.79E-01	uCi/g	Jan 1 2001 12:00AM
241-C-104	240Pu	Sludge	9.67E+01	Ci	C	1.69	g/mL	88	kL	2.79E-01	uCi/g	Jan 1 2001 12:00AM
241-C-104	240Pu	Sludge	1.13E+02	Ci	C	1.69	g/mL	103	kL	2.79E-01	uCi/g	Jan 1 2001 12:00AM
241-C-104	240Pu	Sludge	8.79E+01	Ci	C	1.69	g/mL	80	kL	2.79E-01	uCi/g	Jan 1 2001 12:00AM
241-C-104	241Am	Sludge	9.71E+02	Ci	E	1.69	g/mL	150	kL	3.83E+00	uCi/g	Jan 1 2001 12:00AM
241-C-104	241Am	Sludge	2.15E+03	Ci	E	1.69	g/mL	332	kL	3.83E+00	uCi/g	Jan 1 2001 12:00AM

CALCULATION SHEET

PROJECT: RPP-WTP
JOB NO.: 24590
CALC NO.: 24590-WTP-MMC-FRP-00001
SHEET REV: 0A
SHEET NO.: 105

BY: E. Berrios
DATE: 12/04/02

SUBJECT: Updated Emissions Run Feed Vector

Tank Name	Analyte	Waste Phase	Inventory	Inventory Units	Basis	Density	Density Units	Volume	Volume Units	Concentration	Concentration Units	Decay Date
241-C-104	Bi	Sludge	1.63E+01	kg	S	1.69	g/mL	332	kL	2.90E+01	ug/g	Jan 1 2001 12:00AM
241-C-104	Ca	Sludge	4.57E+02	kg	S	1.69	g/mL	150	kL	1.80E+03	ug/g	Jan 1 2001 12:00AM
241-C-104	Ca	Sludge	1.01E+03	kg	S	1.69	g/mL	332	kL	1.80E+03	ug/g	Jan 1 2001 12:00AM
241-C-104	Ca	Sludge	6.91E+02	kg	S	1.69	g/mL	227	kL	1.80E+03	ug/g	Jan 1 2001 12:00AM
241-C-104	Ca	Sludge	2.68E+02	kg	S	1.69	g/mL	88	kL	1.80E+03	ug/g	Jan 1 2001 12:00AM
241-C-104	Ca	Sludge	3.14E+02	kg	S	1.69	g/mL	103	kL	1.80E+03	ug/g	Jan 1 2001 12:00AM
241-C-104	Ca	Sludge	2.44E+02	kg	S	1.69	g/mL	80	kL	1.80E+03	ug/g	Jan 1 2001 12:00AM
241-C-104	Cd	Sludge	3.48E+02	kg	S	1.69	g/mL	332	kL	6.20E+02	ug/g	Jan 1 2001 12:00AM
241-C-104	Cd	Sludge	9.21E+01	kg	S	1.69	g/mL	88	kL	6.20E+02	ug/g	Jan 1 2001 12:00AM
241-C-104	Cd	Sludge	1.08E+02	kg	S	1.69	g/mL	103	kL	6.20E+02	ug/g	Jan 1 2001 12:00AM
241-C-104	Cd	Sludge	1.57E+02	kg	S	1.69	g/mL	150	kL	6.20E+02	ug/g	Jan 1 2001 12:00AM
241-C-104	Cd	Sludge	8.38E+01	kg	S	1.69	g/mL	80	kL	6.20E+02	ug/g	Jan 1 2001 12:00AM
241-C-104	Cd	Sludge	2.38E+02	kg	S	1.69	g/mL	227	kL	6.20E+02	ug/g	Jan 1 2001 12:00AM
241-C-104	Ce	Sludge	7.45E+00	kg	S	1.69	g/mL	103	kL	4.28E+01	ug/g	Jan 1 2001 12:00AM
241-C-104	Ce	Sludge	1.64E+01	kg	S	1.69	g/mL	227	kL	4.28E+01	ug/g	Jan 1 2001 12:00AM
241-C-104	Ce	Sludge	2.40E+01	kg	S	1.69	g/mL	332	kL	4.28E+01	ug/g	Jan 1 2001 12:00AM
241-C-104	Ce	Sludge	6.37E+00	kg	S	1.69	g/mL	88	kL	4.28E+01	ug/g	Jan 1 2001 12:00AM
241-C-104	Ce	Sludge	1.09E+01	kg	S	1.69	g/mL	150	kL	4.28E+01	ug/g	Jan 1 2001 12:00AM
241-C-104	Ce	Sludge	5.79E+00	kg	S	1.69	g/mL	80	kL	4.28E+01	ug/g	Jan 1 2001 12:00AM
241-C-104	Cl	Sludge	1.22E+02	kg	S	1.69	g/mL	150	kL	4.83E+02	ug/g	Jan 1 2001 12:00AM
241-C-104	Cl	Sludge	2.71E+02	kg	S	1.69	g/mL	332	kL	4.83E+02	ug/g	Jan 1 2001 12:00AM
241-C-104	Cl	Sludge	1.85E+02	kg	S	1.69	g/mL	227	kL	4.83E+02	ug/g	Jan 1 2001 12:00AM
241-C-104	Cl	Sludge	7.19E+01	kg	S	1.69	g/mL	88	kL	4.83E+02	ug/g	Jan 1 2001 12:00AM
241-C-104	Cl	Sludge	8.41E+01	kg	S	1.69	g/mL	103	kL	4.83E+02	ug/g	Jan 1 2001 12:00AM
241-C-104	Cl	Sludge	6.53E+01	kg	S	1.69	g/mL	80	kL	4.83E+02	ug/g	Jan 1 2001 12:00AM
241-C-104	CN	Sludge	7.07E+00	kg	S	1.69	g/mL	332	kL	1.26E+01	ug/g	Jan 1 2001 12:00AM
241-C-104	CN	Sludge	1.70E+00	kg	S	1.69	g/mL	80	kL	1.26E+01	ug/g	Jan 1 2001 12:00AM
241-C-104	CN	Sludge	2.19E+00	kg	S	1.69	g/mL	103	kL	1.26E+01	ug/g	Jan 1 2001 12:00AM
241-C-104	CN	Sludge	3.19E+00	kg	S	1.69	g/mL	150	kL	1.26E+01	ug/g	Jan 1 2001 12:00AM
241-C-104	CN	Sludge	4.83E+00	kg	S	1.69	g/mL	227	kL	1.26E+01	ug/g	Jan 1 2001 12:00AM
241-C-104	CN	Sludge	1.87E+00	kg	S	1.69	g/mL	88	kL	1.26E+01	ug/g	Jan 1 2001 12:00AM
241-C-104	Co	Sludge	8.76E-01	kg	S	1.69	g/mL	88	kL	5.89E+00	ug/g	Jan 1 2001 12:00AM
241-C-104	Co	Sludge	7.96E-01	kg	S	1.69	g/mL	80	kL	5.89E+00	ug/g	Jan 1 2001 12:00AM
241-C-104	Co	Sludge	3.30E+00	kg	S	1.69	g/mL	332	kL	5.89E+00	ug/g	Jan 1 2001 12:00AM
241-C-104	Co	Sludge	1.02E+00	kg	S	1.69	g/mL	103	kL	5.89E+00	ug/g	Jan 1 2001 12:00AM
241-C-104	Co	Sludge	2.26E+00	kg	S	1.69	g/mL	227	kL	5.89E+00	ug/g	Jan 1 2001 12:00AM
241-C-104	Co	Sludge	1.49E+00	kg	S	1.69	g/mL	150	kL	5.89E+00	ug/g	Jan 1 2001 12:00AM
241-C-104	Cr	Sludge	2.24E+02	kg	S	1.69	g/mL	150	kL	8.82E+02	ug/g	Jan 1 2001 12:00AM
241-C-104	Cr	Sludge	4.95E+02	kg	S	1.69	g/mL	332	kL	8.82E+02	ug/g	Jan 1 2001 12:00AM
241-C-104	Cr	Sludge	3.38E+02	kg	S	1.69	g/mL	227	kL	8.82E+02	ug/g	Jan 1 2001 12:00AM
241-C-104	Cr	Sludge	1.31E+02	kg	S	1.69	g/mL	88	kL	8.82E+02	ug/g	Jan 1 2001 12:00AM
241-C-104	Cr	Sludge	1.53E+02	kg	S	1.69	g/mL	103	kL	8.82E+02	ug/g	Jan 1 2001 12:00AM
241-C-104	Cr	Sludge	1.19E+02	kg	S	1.69	g/mL	80	kL	8.82E+02	ug/g	Jan 1 2001 12:00AM
241-C-104	Cu	Sludge	1.41E+01	kg	S	1.69	g/mL	103	kL	8.08E+01	ug/g	Jan 1 2001 12:00AM
241-C-104	Cu	Sludge	1.20E+01	kg	S	1.69	g/mL	88	kL	8.08E+01	ug/g	Jan 1 2001 12:00AM
241-C-104	Cu	Sludge	1.09E+01	kg	S	1.69	g/mL	80	kL	8.08E+01	ug/g	Jan 1 2001 12:00AM
241-C-104	Cu	Sludge	2.05E+01	kg	S	1.69	g/mL	150	kL	8.08E+01	ug/g	Jan 1 2001 12:00AM

CALCULATION SHEET

PROJECT: RPP-WTP
JOB NO.: 24590
CALC NO : 24590-WTP-MAC-FRP-00001
SHEET REV: 0A
SHEET NO.: 106

BY: E. Berrios
DATE: 17/04/02

SUBJECT: Updated Emissions Run Feed Vector

Tank Name	Analyte	Waste Phase	Inventory	Inventory Units	Basis	Density	Density Units	Volume	Volume Units	Concentration	Concentration Units	Decay Date
241-C-104	Cu	Sludge	4.53E+01	kg	S	1.69	g/mL	332	kL	8.08E+01	ug/g	Jan 1 2001 12:00AM
241-C-104	Cu	Sludge	3.10E+01	kg	S	1.69	g/mL	227	kL	8.08E+01	ug/g	Jan 1 2001 12:00AM
241-C-104	F	Sludge	5.29E+03	kg	S	1.69	g/mL	150	kL	2.09E+04	ug/g	Jan 1 2001 12:00AM
241-C-104	F	Sludge	1.17E+04	kg	S	1.69	g/mL	332	kL	2.09E+04	ug/g	Jan 1 2001 12:00AM
241-C-104	F	Sludge	8.01E+03	kg	S	1.69	g/mL	227	kL	2.09E+04	ug/g	Jan 1 2001 12:00AM
241-C-104	F	Sludge	3.11E+03	kg	S	1.69	g/mL	88	kL	2.09E+04	ug/g	Jan 1 2001 12:00AM
241-C-104	F	Sludge	3.64E+03	kg	S	1.69	g/mL	103	kL	2.09E+04	ug/g	Jan 1 2001 12:00AM
241-C-104	F	Sludge	2.82E+03	kg	S	1.69	g/mL	80	kL	2.09E+04	ug/g	Jan 1 2001 12:00AM
241-C-104	Fe	Sludge	4.22E+03	kg	S	1.69	g/mL	150	kL	1.67E+04	ug/g	Jan 1 2001 12:00AM
241-C-104	Fe	Sludge	9.34E+03	kg	S	1.69	g/mL	332	kL	1.67E+04	ug/g	Jan 1 2001 12:00AM
241-C-104	Fe	Sludge	6.39E+03	kg	S	1.69	g/mL	227	kL	1.67E+04	ug/g	Jan 1 2001 12:00AM
241-C-104	Fe	Sludge	2.48E+03	kg	S	1.69	g/mL	88	kL	1.67E+04	ug/g	Jan 1 2001 12:00AM
241-C-104	Fe	Sludge	2.90E+03	kg	S	1.69	g/mL	103	kL	1.67E+04	ug/g	Jan 1 2001 12:00AM
241-C-104	Fe	Sludge	2.25E+03	kg	S	1.69	g/mL	80	kL	1.67E+04	ug/g	Jan 1 2001 12:00AM
241-C-104	Hg	Sludge	1.03E+01	kg	S	1.69	g/mL	150	kL	4.06E+01	ug/g	Jan 1 2001 12:00AM
241-C-104	Hg	Sludge	2.28E+01	kg	S	1.69	g/mL	332	kL	4.06E+01	ug/g	Jan 1 2001 12:00AM
241-C-104	Hg	Sludge	1.56E+01	kg	S	1.69	g/mL	227	kL	4.06E+01	ug/g	Jan 1 2001 12:00AM
241-C-104	Hg	Sludge	6.05E+00	kg	S	1.69	g/mL	88	kL	4.06E+01	ug/g	Jan 1 2001 12:00AM
241-C-104	Hg	Sludge	7.08E+00	kg	S	1.69	g/mL	103	kL	4.06E+01	ug/g	Jan 1 2001 12:00AM
241-C-104	Hg	Sludge	5.50E+00	kg	S	1.69	g/mL	80	kL	4.06E+01	ug/g	Jan 1 2001 12:00AM
241-C-104	K	Sludge	2.04E+02	kg	S	1.69	g/mL	150	kL	8.04E+02	ug/g	Jan 1 2001 12:00AM
241-C-104	K	Sludge	4.51E+02	kg	S	1.69	g/mL	332	kL	8.04E+02	ug/g	Jan 1 2001 12:00AM
241-C-104	K	Sludge	3.09E+02	kg	S	1.69	g/mL	227	kL	8.04E+02	ug/g	Jan 1 2001 12:00AM
241-C-104	K	Sludge	1.20E+02	kg	S	1.69	g/mL	88	kL	8.04E+02	ug/g	Jan 1 2001 12:00AM
241-C-104	K	Sludge	1.40E+02	kg	S	1.69	g/mL	103	kL	8.04E+02	ug/g	Jan 1 2001 12:00AM
241-C-104	K	Sludge	1.09E+02	kg	S	1.69	g/mL	80	kL	8.04E+02	ug/g	Jan 1 2001 12:00AM
241-C-104	La	Sludge	7.45E+00	kg	S	1.69	g/mL	150	kL	2.94E+01	ug/g	Jan 1 2001 12:00AM
241-C-104	La	Sludge	1.65E+01	kg	S	1.69	g/mL	332	kL	2.94E+01	ug/g	Jan 1 2001 12:00AM
241-C-104	La	Sludge	1.13E+01	kg	S	1.69	g/mL	227	kL	2.94E+01	ug/g	Jan 1 2001 12:00AM
241-C-104	La	Sludge	4.37E+00	kg	S	1.69	g/mL	88	kL	2.94E+01	ug/g	Jan 1 2001 12:00AM
241-C-104	La	Sludge	5.31E+00	kg	S	1.69	g/mL	103	kL	2.94E+01	ug/g	Jan 1 2001 12:00AM
241-C-104	La	Sludge	3.97E+00	kg	S	1.69	g/mL	80	kL	2.94E+01	ug/g	Jan 1 2001 12:00AM
241-C-104	Li	Sludge	9.25E-01	kg	S	1.69	g/mL	150	kL	3.65E+00	ug/g	Jan 1 2001 12:00AM
241-C-104	Li	Sludge	4.93E-01	kg	S	1.69	g/mL	80	kL	3.65E+00	ug/g	Jan 1 2001 12:00AM
241-C-104	Li	Sludge	5.43E-01	kg	S	1.69	g/mL	88	kL	3.65E+00	ug/g	Jan 1 2001 12:00AM
241-C-104	Li	Sludge	2.05E+00	kg	S	1.69	g/mL	332	kL	3.65E+00	ug/g	Jan 1 2001 12:00AM
241-C-104	Li	Sludge	1.40E+00	kg	S	1.69	g/mL	227	kL	3.65E+00	ug/g	Jan 1 2001 12:00AM
241-C-104	Li	Sludge	6.35E-01	kg	S	1.69	g/mL	103	kL	3.65E+00	ug/g	Jan 1 2001 12:00AM
241-C-104	Mg	Sludge	1.85E+01	kg	S	1.69	g/mL	88	kL	1.24E+02	ug/g	Jan 1 2001 12:00AM
241-C-104	Mg	Sludge	3.15E+01	kg	S	1.69	g/mL	150	kL	1.24E+02	ug/g	Jan 1 2001 12:00AM
241-C-104	Mg	Sludge	4.77E+01	kg	S	1.69	g/mL	227	kL	1.24E+02	ug/g	Jan 1 2001 12:00AM
241-C-104	Mg	Sludge	1.68E+01	kg	S	1.69	g/mL	80	kL	1.24E+02	ug/g	Jan 1 2001 12:00AM
241-C-104	Mg	Sludge	6.98E+01	kg	S	1.69	g/mL	332	kL	1.24E+02	ug/g	Jan 1 2001 12:00AM
241-C-104	Mg	Sludge	2.17E+01	kg	S	1.69	g/mL	103	kL	1.24E+02	ug/g	Jan 1 2001 12:00AM
241-C-104	Mn	Sludge	1.07E+03	kg	S	1.69	g/mL	150	kL	4.24E+03	ug/g	Jan 1 2001 12:00AM
241-C-104	Mn	Sludge	2.38E+03	kg	S	1.69	g/mL	332	kL	4.24E+03	ug/g	Jan 1 2001 12:00AM
241-C-104	Mn	Sludge	1.62E+03	kg	S	1.69	g/mL	227	kL	4.24E+03	ug/g	Jan 1 2001 12:00AM

CALCULATION SHEET

PROJECT: B2P-WTP
JOB NO.: 24590
CALC NO.: 24590-WTP-M4C-FRP-00001
SHEET REV: 0A
SHEET NO.: 107

BY: E. Barrios
DATE: 12/04/02

SUBJECT: Updated Emissions Run Feed Vector

Tank Name	Analyte	Waste Phase	Inventory	Inventory Units	Basis	Density	Density Units	Volume	Volume Units	Concentration	Concentration Units	Decay Date
241-C-104	Mn	Sludge	6.30E+02	kg	S	1.69	g/mL	88	kL	4.24E+03	ug/g	Jan 1 2001 12:00AM
241-C-104	Mn	Sludge	7.37E+02	kg	S	1.69	g/mL	103	kL	4.24E+03	ug/g	Jan 1 2001 12:00AM
241-C-104	Mn	Sludge	5.73E+02	kg	S	1.69	g/mL	80	kL	4.24E+03	ug/g	Jan 1 2001 12:00AM
241-C-104	Mo	Sludge	8.14E+00	kg	S	1.69	g/mL	332	kL	1.45E+01	ug/g	Jan 1 2001 12:00AM
241-C-104	Mo	Sludge	3.68E+00	kg	S	1.69	g/mL	150	kL	1.45E+01	ug/g	Jan 1 2001 12:00AM
241-C-104	Mo	Sludge	1.96E+00	kg	S	1.69	g/mL	80	kL	1.45E+01	ug/g	Jan 1 2001 12:00AM
241-C-104	Mo	Sludge	2.16E+00	kg	S	1.69	g/mL	88	kL	1.45E+01	ug/g	Jan 1 2001 12:00AM
241-C-104	Mo	Sludge	5.56E+00	kg	S	1.69	g/mL	227	kL	1.45E+01	ug/g	Jan 1 2001 12:00AM
241-C-104	Mo	Sludge	2.52E+00	kg	S	1.69	g/mL	103	kL	1.45E+01	ug/g	Jan 1 2001 12:00AM
241-C-104	Na	Sludge	2.73E+04	kg	S	1.69	g/mL	150	kL	1.08E+05	ug/g	Jan 1 2001 12:00AM
241-C-104	Na	Sludge	6.03E+04	kg	S	1.69	g/mL	332	kL	1.08E+05	ug/g	Jan 1 2001 12:00AM
241-C-104	Na	Sludge	4.12E+04	kg	S	1.69	g/mL	227	kL	1.08E+05	ug/g	Jan 1 2001 12:00AM
241-C-104	Na	Sludge	1.60E+04	kg	S	1.69	g/mL	88	kL	1.08E+05	ug/g	Jan 1 2001 12:00AM
241-C-104	Na	Sludge	1.87E+04	kg	S	1.69	g/mL	103	kL	1.08E+05	ug/g	Jan 1 2001 12:00AM
241-C-104	Na	Sludge	1.45E+04	kg	S	1.69	g/mL	80	kL	1.08E+05	ug/g	Jan 1 2001 12:00AM
241-C-104	Nd	Sludge	2.48E+01	kg	S	1.69	g/mL	227	kL	6.45E+01	ug/g	Jan 1 2001 12:00AM
241-C-104	Nd	Sludge	8.72E+00	kg	S	1.69	g/mL	80	kL	6.45E+01	ug/g	Jan 1 2001 12:00AM
241-C-104	Nd	Sludge	3.62E+01	kg	S	1.69	g/mL	332	kL	6.45E+01	ug/g	Jan 1 2001 12:00AM
241-C-104	Nd	Sludge	9.60E+00	kg	S	1.69	g/mL	88	kL	6.45E+01	ug/g	Jan 1 2001 12:00AM
241-C-104	Nd	Sludge	1.12E+01	kg	S	1.69	g/mL	103	kL	6.45E+01	ug/g	Jan 1 2001 12:00AM
241-C-104	Nd	Sludge	1.64E+01	kg	S	1.69	g/mL	150	kL	6.45E+01	ug/g	Jan 1 2001 12:00AM
241-C-104	NH3	Sludge	2.25E+02	kg	M	1.46	g/mL	150	kL	7.96E+02	ug/g	Jan 1 2001 12:00AM
241-C-104	Ni	Sludge	4.03E+02	kg	S	1.69	g/mL	150	kL	1.59E+03	ug/g	Jan 1 2001 12:00AM
241-C-104	Ni	Sludge	8.92E+02	kg	S	1.69	g/mL	332	kL	1.59E+03	ug/g	Jan 1 2001 12:00AM
241-C-104	Ni	Sludge	6.10E+02	kg	S	1.69	g/mL	227	kL	1.59E+03	ug/g	Jan 1 2001 12:00AM
241-C-104	Ni	Sludge	2.36E+02	kg	S	1.69	g/mL	88	kL	1.59E+03	ug/g	Jan 1 2001 12:00AM
241-C-104	Ni	Sludge	2.77E+02	kg	S	1.69	g/mL	103	kL	1.59E+03	ug/g	Jan 1 2001 12:00AM
241-C-104	Ni	Sludge	2.15E+02	kg	S	1.69	g/mL	80	kL	1.59E+03	ug/g	Jan 1 2001 12:00AM
241-C-104	NO2	Sludge	5.59E+03	kg	S	1.69	g/mL	150	kL	2.20E+04	ug/g	Jan 1 2001 12:00AM
241-C-104	NO2	Sludge	1.24E+04	kg	S	1.69	g/mL	332	kL	2.20E+04	ug/g	Jan 1 2001 12:00AM
241-C-104	NO2	Sludge	8.46E+03	kg	S	1.69	g/mL	227	kL	2.20E+04	ug/g	Jan 1 2001 12:00AM
241-C-104	NO2	Sludge	3.28E+03	kg	S	1.69	g/mL	88	kL	2.20E+04	ug/g	Jan 1 2001 12:00AM
241-C-104	NO2	Sludge	3.84E+03	kg	S	1.69	g/mL	103	kL	2.20E+04	ug/g	Jan 1 2001 12:00AM
241-C-104	NO2	Sludge	2.98E+03	kg	S	1.69	g/mL	80	kL	2.20E+04	ug/g	Jan 1 2001 12:00AM
241-C-104	NO3	Sludge	3.00E+03	kg	S	1.69	g/mL	150	kL	1.18E+04	ug/g	Jan 1 2001 12:00AM
241-C-104	NO3	Sludge	6.63E+03	kg	S	1.69	g/mL	332	kL	1.18E+04	ug/g	Jan 1 2001 12:00AM
241-C-104	NO3	Sludge	4.53E+03	kg	S	1.69	g/mL	227	kL	1.18E+04	ug/g	Jan 1 2001 12:00AM
241-C-104	NO3	Sludge	1.76E+03	kg	S	1.69	g/mL	88	kL	1.18E+04	ug/g	Jan 1 2001 12:00AM
241-C-104	NO3	Sludge	2.06E+03	kg	S	1.69	g/mL	103	kL	1.18E+04	ug/g	Jan 1 2001 12:00AM
241-C-104	NO3	Sludge	1.60E+03	kg	S	1.69	g/mL	80	kL	1.18E+04	ug/g	Jan 1 2001 12:00AM
241-C-104	Oxalate	Sludge	5.04E+02	kg	S	1.69	g/mL	88	kL	3.39E+03	ug/g	Jan 1 2001 12:00AM
241-C-104	Oxalate	Sludge	1.90E+03	kg	S	1.69	g/mL	332	kL	3.39E+03	ug/g	Jan 1 2001 12:00AM
241-C-104	Oxalate	Sludge	4.58E+02	kg	S	1.69	g/mL	80	kL	3.39E+03	ug/g	Jan 1 2001 12:00AM
241-C-104	Oxalate	Sludge	5.90E+02	kg	S	1.69	g/mL	103	kL	3.39E+03	ug/g	Jan 1 2001 12:00AM
241-C-104	Oxalate	Sludge	1.30E+03	kg	S	1.69	g/mL	227	kL	3.39E+03	ug/g	Jan 1 2001 12:00AM
241-C-104	Oxalate	Sludge	8.59E+02	kg	S	1.69	g/mL	150	kL	3.39E+03	ug/g	Jan 1 2001 12:00AM
241-C-104	Pb	Sludge	1.94E+02	kg	S	1.69	g/mL	227	kL	5.05E+02	ug/g	Jan 1 2001 12:00AM

CALCULATION SHEET

PROJECT: RPP-WTP
JOB NO.: 24590
CALC NO.: 24590-WTP-M4C-FRP-00001
SHEET REV: 0A
SHEET NO.: 108

BY: E. Berrios
DATE: 12/04/02

SUBJECT: Updated Emissions Run Feed Vector

Tank Name	Analyte	Waste Phase	Inventory	Inventory Units	Basis	Density	Density Units	Volume	Volume Units	Concentration	Concentration Units	Decay Date
241-C-104	Pb	Sludge	7.51E+01	kg	S	1.69	g/mL	88	kL	5.05E+02	ug/g	Jan 1 2001 12:00AM
241-C-104	Pb	Sludge	8.79E+01	kg	S	1.69	g/mL	103	kL	5.05E+02	ug/g	Jan 1 2001 12:00AM
241-C-104	Pb	Sludge	6.83E+01	kg	S	1.69	g/mL	80	kL	5.05E+02	ug/g	Jan 1 2001 12:00AM
241-C-104	Pb	Sludge	1.28E+02	kg	S	1.69	g/mL	150	kL	5.05E+02	ug/g	Jan 1 2001 12:00AM
241-C-104	Pb	Sludge	2.83E+02	kg	S	1.69	g/mL	332	kL	5.05E+02	ug/g	Jan 1 2001 12:00AM
241-C-104	PO4	Sludge	4.91E+02	kg	S	1.69	g/mL	150	kL	1.94E+03	ug/g	Jan 1 2001 12:00AM
241-C-104	PO4	Sludge	1.09E+03	kg	S	1.69	g/mL	332	kL	1.94E+03	ug/g	Jan 1 2001 12:00AM
241-C-104	PO4	Sludge	7.43E+02	kg	S	1.69	g/mL	227	kL	1.94E+03	ug/g	Jan 1 2001 12:00AM
241-C-104	PO4	Sludge	2.88E+02	kg	S	1.69	g/mL	88	kL	1.94E+03	ug/g	Jan 1 2001 12:00AM
241-C-104	PO4	Sludge	3.37E+02	kg	S	1.69	g/mL	103	kL	1.94E+03	ug/g	Jan 1 2001 12:00AM
241-C-104	PO4	Sludge	2.62E+02	kg	S	1.69	g/mL	80	kL	1.94E+03	ug/g	Jan 1 2001 12:00AM
241-C-104	Pr	Sludge	5.72E+00	kg	S	1.69	g/mL	80	kL	4.23E+01	ug/g	Jan 1 2001 12:00AM
241-C-104	Pr	Sludge	1.62E+01	kg	S	1.69	g/mL	227	kL	4.23E+01	ug/g	Jan 1 2001 12:00AM
241-C-104	Pr	Sludge	6.29E+00	kg	S	1.69	g/mL	88	kL	4.23E+01	ug/g	Jan 1 2001 12:00AM
241-C-104	Pr	Sludge	2.37E+01	kg	S	1.69	g/mL	332	kL	4.23E+01	ug/g	Jan 1 2001 12:00AM
241-C-104	Pr	Sludge	1.07E+01	kg	S	1.69	g/mL	150	kL	4.23E+01	ug/g	Jan 1 2001 12:00AM
241-C-104	Pr	Sludge	7.36E+00	kg	S	1.69	g/mL	103	kL	4.23E+01	ug/g	Jan 1 2001 12:00AM
241-C-104	Rb	Sludge	2.80E+01	kg	S	1.69	g/mL	103	kL	1.61E+02	ug/g	Jan 1 2001 12:00AM
241-C-104	Rb	Sludge	4.08E+01	kg	S	1.69	g/mL	150	kL	1.61E+02	ug/g	Jan 1 2001 12:00AM
241-C-104	Rb	Sludge	9.03E+01	kg	S	1.69	g/mL	332	kL	1.61E+02	ug/g	Jan 1 2001 12:00AM
241-C-104	Rb	Sludge	6.18E+01	kg	S	1.69	g/mL	227	kL	1.61E+02	ug/g	Jan 1 2001 12:00AM
241-C-104	Rb	Sludge	2.39E+01	kg	S	1.69	g/mL	88	kL	1.61E+02	ug/g	Jan 1 2001 12:00AM
241-C-104	Rb	Sludge	2.18E+01	kg	S	1.69	g/mL	80	kL	1.61E+02	ug/g	Jan 1 2001 12:00AM
241-C-104	Rh	Sludge	4.88E+01	kg	S	1.69	g/mL	332	kL	8.70E+01	ug/g	Jan 1 2001 12:00AM
241-C-104	Rh	Sludge	1.18E+01	kg	S	1.69	g/mL	80	kL	8.70E+01	ug/g	Jan 1 2001 12:00AM
241-C-104	Rh	Sludge	1.29E+01	kg	S	1.69	g/mL	88	kL	8.70E+01	ug/g	Jan 1 2001 12:00AM
241-C-104	Rh	Sludge	3.34E+01	kg	S	1.69	g/mL	227	kL	8.70E+01	ug/g	Jan 1 2001 12:00AM
241-C-104	Rh	Sludge	1.51E+01	kg	S	1.69	g/mL	103	kL	8.70E+01	ug/g	Jan 1 2001 12:00AM
241-C-104	Rh	Sludge	2.21E+01	kg	S	1.69	g/mL	150	kL	8.70E+01	ug/g	Jan 1 2001 12:00AM
241-C-104	Sb	Sludge	3.08E+00	kg	S	1.69	g/mL	103	kL	1.77E+01	ug/g	Jan 1 2001 12:00AM
241-C-104	Sb	Sludge	2.63E+00	kg	S	1.69	g/mL	88	kL	1.77E+01	ug/g	Jan 1 2001 12:00AM
241-C-104	Se	Sludge	1.13E+01	kg	S	1.69	g/mL	227	kL	2.94E+01	ug/g	Jan 1 2001 12:00AM
241-C-104	Se	Sludge	1.65E+01	kg	S	1.69	g/mL	332	kL	2.94E+01	ug/g	Jan 1 2001 12:00AM
241-C-104	Se	Sludge	7.45E+00	kg	S	1.69	g/mL	150	kL	2.94E+01	ug/g	Jan 1 2001 12:00AM
241-C-104	Se	Sludge	3.97E+00	kg	S	1.69	g/mL	80	kL	2.94E+01	ug/g	Jan 1 2001 12:00AM
241-C-104	Si	Sludge	1.57E+03	kg	S	1.69	g/mL	150	kL	6.18E+03	ug/g	Jan 1 2001 12:00AM
241-C-104	Si	Sludge	3.47E+03	kg	S	1.69	g/mL	332	kL	6.18E+03	ug/g	Jan 1 2001 12:00AM
241-C-104	Si	Sludge	2.37E+03	kg	S	1.69	g/mL	227	kL	6.18E+03	ug/g	Jan 1 2001 12:00AM
241-C-104	Si	Sludge	9.19E+02	kg	S	1.69	g/mL	88	kL	6.18E+03	ug/g	Jan 1 2001 12:00AM
241-C-104	Si	Sludge	1.08E+03	kg	S	1.69	g/mL	103	kL	6.18E+03	ug/g	Jan 1 2001 12:00AM
241-C-104	Si	Sludge	8.35E+02	kg	S	1.69	g/mL	80	kL	6.18E+03	ug/g	Jan 1 2001 12:00AM
241-C-104	SO4	Sludge	5.23E+02	kg	S	1.69	g/mL	150	kL	2.06E+03	ug/g	Jan 1 2001 12:00AM
241-C-104	SO4	Sludge	1.16E+03	kg	S	1.69	g/mL	332	kL	2.06E+03	ug/g	Jan 1 2001 12:00AM
241-C-104	SO4	Sludge	7.92E+02	kg	S	1.69	g/mL	227	kL	2.06E+03	ug/g	Jan 1 2001 12:00AM
241-C-104	SO4	Sludge	3.07E+02	kg	S	1.69	g/mL	88	kL	2.06E+03	ug/g	Jan 1 2001 12:00AM
241-C-104	SO4	Sludge	3.59E+02	kg	S	1.69	g/mL	103	kL	2.06E+03	ug/g	Jan 1 2001 12:00AM
241-C-104	SO4	Sludge	2.79E+02	kg	S	1.69	g/mL	80	kL	2.06E+03	ug/g	Jan 1 2001 12:00AM

CALCULATION SHEET

PROJECT: RPP-WTP
JOB NO.: 24590
CALC NO.: 24590-WTP-M4C-FRP-00001
SHEET REV: 0A
SHEET NO.: 109

BY: E. Berrios
DATE: 12/04/02

SUBJECT: Updated Emissions Run Feed Vector

Tank Name	Analyte	Waste Phase	Inventory	Inventory Units	Basis	Density	Density Units	Volume	Volume Units	Concentration	Concentration Units	Decay Date
241-C-104	Sr	Sludge	1.34E+01	kg	S	1.69	g/mL	150	kL	5.28E+01	ug/g	Jan 1 2001 12:00AM
241-C-104	Sr	Sludge	2.96E+01	kg	S	1.69	g/mL	332	kL	5.28E+01	ug/g	Jan 1 2001 12:00AM
241-C-104	Sr	Sludge	2.03E+01	kg	S	1.69	g/mL	227	kL	5.28E+01	ug/g	Jan 1 2001 12:00AM
241-C-104	Sr	Sludge	7.85E+00	kg	S	1.69	g/mL	88	kL	5.28E+01	ug/g	Jan 1 2001 12:00AM
241-C-104	Sr	Sludge	9.19E+00	kg	S	1.69	g/mL	103	kL	5.28E+01	ug/g	Jan 1 2001 12:00AM
241-C-104	Sr	Sludge	7.14E+00	kg	S	1.69	g/mL	80	kL	5.28E+01	ug/g	Jan 1 2001 12:00AM
241-C-104	Ta	Sludge	1.43E-01	kg	S	1.69	g/mL	80	kL	1.05E+00	ug/g	Jan 1 2001 12:00AM
241-C-104	Ta	Sludge	4.05E-01	kg	S	1.69	g/mL	227	kL	1.05E+00	ug/g	Jan 1 2001 12:00AM
241-C-104	Ta	Sludge	1.57E-01	kg	S	1.69	g/mL	88	kL	1.05E+00	ug/g	Jan 1 2001 12:00AM
241-C-104	Ta	Sludge	2.67E-01	kg	S	1.69	g/mL	150	kL	1.05E+00	ug/g	Jan 1 2001 12:00AM
241-C-104	Ta	Sludge	1.84E-01	kg	S	1.69	g/mL	103	kL	1.05E+00	ug/g	Jan 1 2001 12:00AM
241-C-104	Ta	Sludge	5.92E-01	kg	S	1.69	g/mL	332	kL	1.05E+00	ug/g	Jan 1 2001 12:00AM
241-C-104	Th	Sludge	1.18E+04	kg	S	1.69	g/mL	227	kL	3.08E+04	ug/g	Jan 1 2001 12:00AM
241-C-104	Th	Sludge	5.35E+03	kg	S	1.69	g/mL	103	kL	3.08E+04	ug/g	Jan 1 2001 12:00AM
241-C-104	Th	Sludge	7.80E+03	kg	S	1.69	g/mL	150	kL	3.08E+04	ug/g	Jan 1 2001 12:00AM
241-C-104	Th	Sludge	1.73E+04	kg	S	1.69	g/mL	332	kL	3.08E+04	ug/g	Jan 1 2001 12:00AM
241-C-104	Th	Sludge	4.57E+03	kg	S	1.69	g/mL	88	kL	3.08E+04	ug/g	Jan 1 2001 12:00AM
241-C-104	Th	Sludge	4.16E+03	kg	S	1.69	g/mL	80	kL	3.08E+04	ug/g	Jan 1 2001 12:00AM
241-C-104	Ti	Sludge	1.03E+01	kg	S	1.69	g/mL	103	kL	5.91E+01	ug/g	Jan 1 2001 12:00AM
241-C-104	Ti	Sludge	3.32E+01	kg	S	1.69	g/mL	332	kL	5.91E+01	ug/g	Jan 1 2001 12:00AM
241-C-104	Ti	Sludge	2.27E+01	kg	S	1.69	g/mL	227	kL	5.91E+01	ug/g	Jan 1 2001 12:00AM
241-C-104	Ti	Sludge	8.00E+00	kg	S	1.69	g/mL	80	kL	5.91E+01	ug/g	Jan 1 2001 12:00AM
241-C-104	Ti	Sludge	1.50E+01	kg	S	1.69	g/mL	150	kL	5.91E+01	ug/g	Jan 1 2001 12:00AM
241-C-104	Ti	Sludge	8.80E+00	kg	S	1.69	g/mL	88	kL	5.91E+01	ug/g	Jan 1 2001 12:00AM
241-C-104	TIC as CO3	Sludge	7.42E+03	kg	S	1.69	g/mL	150	kL	2.93E+04	ug/g	Jan 1 2001 12:00AM
241-C-104	TIC as CO3	Sludge	1.64E+04	kg	S	1.69	g/mL	332	kL	2.93E+04	ug/g	Jan 1 2001 12:00AM
241-C-104	TIC as CO3	Sludge	1.12E+04	kg	S	1.69	g/mL	227	kL	2.93E+04	ug/g	Jan 1 2001 12:00AM
241-C-104	TIC as CO3	Sludge	4.36E+03	kg	S	1.69	g/mL	88	kL	2.93E+04	ug/g	Jan 1 2001 12:00AM
241-C-104	TIC as CO3	Sludge	5.10E+03	kg	S	1.69	g/mL	103	kL	2.93E+04	ug/g	Jan 1 2001 12:00AM
241-C-104	TIC as CO3	Sludge	3.96E+03	kg	S	1.69	g/mL	80	kL	2.93E+04	ug/g	Jan 1 2001 12:00AM
241-C-104	Tl	Sludge	3.30E+01	kg	S	1.69	g/mL	332	kL	5.89E+01	ug/g	Jan 1 2001 12:00AM
241-C-104	Tl	Sludge	1.49E+01	kg	S	1.69	g/mL	150	kL	5.89E+01	ug/g	Jan 1 2001 12:00AM
241-C-104	Tl	Sludge	1.02E+01	kg	S	1.69	g/mL	103	kL	5.89E+01	ug/g	Jan 1 2001 12:00AM
241-C-104	Tl	Sludge	2.26E+01	kg	S	1.69	g/mL	227	kL	5.89E+01	ug/g	Jan 1 2001 12:00AM
241-C-104	Tl	Sludge	7.96E+00	kg	S	1.69	g/mL	80	kL	5.89E+01	ug/g	Jan 1 2001 12:00AM
241-C-104	Tl	Sludge	8.76E+00	kg	S	1.69	g/mL	88	kL	5.89E+01	ug/g	Jan 1 2001 12:00AM
241-C-104	UTOTAL	Sludge	5.40E+03	kg	S	1.69	g/mL	150	kL	2.13E+04	ug/g	Jan 1 2001 12:00AM
241-C-104	UTOTAL	Sludge	1.20E+04	kg	S	1.69	g/mL	332	kL	2.13E+04	ug/g	Jan 1 2001 12:00AM
241-C-104	UTOTAL	Sludge	3.17E+03	kg	S	1.69	g/mL	88	kL	2.13E+04	ug/g	Jan 1 2001 12:00AM
241-C-104	UTOTAL	Sludge	3.71E+03	kg	S	1.69	g/mL	103	kL	2.13E+04	ug/g	Jan 1 2001 12:00AM
241-C-104	UTOTAL	Sludge	2.88E+03	kg	S	1.69	g/mL	80	kL	2.13E+04	ug/g	Jan 1 2001 12:00AM

CALCULATION SHEET

PROJECT: RPP-WTP
JOB NO.: 24590
CALC NO.: 24590-WTP-M4C-FRP-00001
SHEET REV: 0A
SHEET NO.: 110

BY: E. Berrios
DATE: 12/04/02

SUBJECT: Updated Emissions Run Feed Vector

Tank Name	Analyte	Waste Phase	Inventory	Inventory Units	Basis	Density	Density Units	Volume	Volume Units	Concentration	Concentration Units	Decay Date
241-C-104	UTOTAL	Sludge	8.17E+03	kg	S	1.69	g/mL	227	kL	2.13E+04	ug/g	Jan 1 2001 12:00AM
241-C-104	V	Sludge	9.22E+00	kg	S	1.69	g/mL	332	kL	1.64E+01	ug/g	Jan 1 2001 12:00AM
241-C-104	V	Sludge	2.44E+00	kg	S	1.69	g/mL	88	kL	1.64E+01	ug/g	Jan 1 2001 12:00AM
241-C-104	V	Sludge	4.16E+00	kg	S	1.69	g/mL	150	kL	1.64E+01	ug/g	Jan 1 2001 12:00AM
241-C-104	V	Sludge	2.22E+00	kg	S	1.69	g/mL	80	kL	1.64E+01	ug/g	Jan 1 2001 12:00AM
241-C-104	V	Sludge	2.86E+00	kg	S	1.69	g/mL	103	kL	1.64E+01	ug/g	Jan 1 2001 12:00AM
241-C-104	V	Sludge	6.30E+00	kg	S	1.69	g/mL	227	kL	1.64E+01	ug/g	Jan 1 2001 12:00AM
241-C-104	W	Sludge	3.25E+02	kg	S	1.69	g/mL	332	kL	5.80E+02	ug/g	Jan 1 2001 12:00AM
241-C-104	W	Sludge	7.83E+01	kg	S	1.69	g/mL	80	kL	5.80E+02	ug/g	Jan 1 2001 12:00AM
241-C-104	W	Sludge	2.22E+02	kg	S	1.69	g/mL	227	kL	5.80E+02	ug/g	Jan 1 2001 12:00AM
241-C-104	W	Sludge	1.01E+02	kg	S	1.69	g/mL	103	kL	5.80E+02	ug/g	Jan 1 2001 12:00AM
241-C-104	W	Sludge	8.62E+01	kg	S	1.69	g/mL	88	kL	5.80E+02	ug/g	Jan 1 2001 12:00AM
241-C-104	W	Sludge	1.47E+02	kg	S	1.69	g/mL	150	kL	5.80E+02	ug/g	Jan 1 2001 12:00AM
241-C-104	Y	Sludge	4.31E+00	kg	S	1.69	g/mL	150	kL	1.70E+01	ug/g	Jan 1 2001 12:00AM
241-C-104	Y	Sludge	6.52E+00	kg	S	1.69	g/mL	227	kL	1.70E+01	ug/g	Jan 1 2001 12:00AM
241-C-104	Y	Sludge	2.30E+00	kg	S	1.69	g/mL	80	kL	1.70E+01	ug/g	Jan 1 2001 12:00AM
241-C-104	Y	Sludge	2.53E+00	kg	S	1.69	g/mL	88	kL	1.70E+01	ug/g	Jan 1 2001 12:00AM
241-C-104	Y	Sludge	2.96E+00	kg	S	1.69	g/mL	103	kL	1.70E+01	ug/g	Jan 1 2001 12:00AM
241-C-104	Y	Sludge	9.54E+00	kg	S	1.69	g/mL	332	kL	1.70E+01	ug/g	Jan 1 2001 12:00AM
241-C-104	Zn	Sludge	2.06E+02	kg	S	1.69	g/mL	332	kL	3.67E+02	ug/g	Jan 1 2001 12:00AM
241-C-104	Zn	Sludge	5.46E+01	kg	S	1.69	g/mL	88	kL	3.67E+02	ug/g	Jan 1 2001 12:00AM
241-C-104	Zn	Sludge	6.39E+01	kg	S	1.69	g/mL	103	kL	3.67E+02	ug/g	Jan 1 2001 12:00AM
241-C-104	Zn	Sludge	4.96E+01	kg	S	1.69	g/mL	80	kL	3.67E+02	ug/g	Jan 1 2001 12:00AM
241-C-104	Zn	Sludge	1.41E+02	kg	S	1.69	g/mL	227	kL	3.67E+02	ug/g	Jan 1 2001 12:00AM
241-C-104	Zn	Sludge	9.31E+01	kg	S	1.69	g/mL	150	kL	3.67E+02	ug/g	Jan 1 2001 12:00AM
241-C-104	Zr	Sludge	9.93E+03	kg	S	1.69	g/mL	150	kL	3.92E+04	ug/g	Jan 1 2001 12:00AM
241-C-104	Zr	Sludge	2.20E+04	kg	S	1.69	g/mL	332	kL	3.92E+04	ug/g	Jan 1 2001 12:00AM
241-C-104	Zr	Sludge	1.50E+04	kg	S	1.69	g/mL	227	kL	3.92E+04	ug/g	Jan 1 2001 12:00AM
241-C-104	Zr	Sludge	5.83E+03	kg	S	1.69	g/mL	88	kL	3.92E+04	ug/g	Jan 1 2001 12:00AM
241-C-104	Zr	Sludge	6.82E+03	kg	S	1.69	g/mL	103	kL	3.92E+04	ug/g	Jan 1 2001 12:00AM
241-C-104	Zr	Sludge	5.30E+03	kg	S	1.69	g/mL	80	kL	3.92E+04	ug/g	Jan 1 2001 12:00AM
241-C-106	106Ru	Sludge	5.77E-06	Ci	TE	1.3	g/mL	23	kL	8.08E-08	uCi/g	Jan 1 2001 12:00AM
241-C-106	113mCd	Sludge	5.84E+00	Ci	TE	1.3	g/mL	23	kL	8.17E-02	uCi/g	Jan 1 2001 12:00AM
241-C-106	125Sb	Sludge	4.01E-01	Ci	TE	1.3	g/mL	23	kL	5.62E-03	uCi/g	Jan 1 2001 12:00AM
241-C-106	126Sn	Sludge	1.81E+00	Ci	TE	1.3	g/mL	23	kL	2.53E-02	uCi/g	Jan 1 2001 12:00AM
241-C-106	129I	Sludge	8.28E-03	Ci	TE	1.3	g/mL	23	kL	1.16E-04	uCi/g	Jan 1 2001 12:00AM
241-C-106	134Cs	Sludge	1.00E-02	Ci	TE	1.3	g/mL	23	kL	1.41E-04	uCi/g	Jan 1 2001 12:00AM
241-C-106	137Cs	Sludge	1.14E+04	Ci	S	1.56	g/mL	23	kL	3.17E+02	uCi/g	Jan 1 2001 12:00AM
241-C-106	137mBa	Sludge	1.08E+04	Ci	C		g/mL	23	kL		uCi/g	Jan 1 2001 12:00AM
241-C-106	14C	Sludge	8.28E-03	Ci	S	1.56	g/mL	23	kL	2.31E-04	uCi/g	Jan 1 2001 12:00AM
241-C-106	151Sm	Sludge	1.01E+04	Ci	TE	1.3	g/mL	23	kL	1.41E+02	uCi/g	Jan 1 2001 12:00AM
241-C-106	152Eu	Sludge	2.85E+00	Ci	TE	1.3	g/mL	23	kL	3.99E-02	uCi/g	Jan 1 2001 12:00AM
241-C-106	154Eu	Sludge	2.64E+02	Ci	S	1.56	g/mL	23	kL	7.36E+00	uCi/g	Jan 1 2001 12:00AM
241-C-106	155Eu	Sludge	1.82E+02	Ci	S	1.56	g/mL	23	kL	5.08E+00	uCi/g	Jan 1 2001 12:00AM
241-C-106	226Ra	Sludge	3.93E-04	Ci	TE	1.3	g/mL	23	kL	5.50E-06	uCi/g	Jan 1 2001 12:00AM
241-C-106	227Ac	Sludge	2.21E-03	Ci	TE	1.3	g/mL	23	kL	3.09E-05	uCi/g	Jan 1 2001 12:00AM
241-C-106	228Ra	Sludge	2.46E-05	Ci	TE	1.3	g/mL	23	kL	3.44E-07	uCi/g	Jan 1 2001 12:00AM

CALCULATION SHEET

PROJECT: RPP-WTP
JOB NO.: 24590
CALC NO.: 24590-WTP-M4C-FRP-00001
SHEET REV: 0A
SHEET NO.: 111

BY: E. Borrios
DATE: 12/04/02

SUBJECT: Updated Emissions Run Feed Vector

Tank Name	Analyte	Waste Phase	Inventory	Inventory Units	Basis	Density	Density Units	Volume	Volume Units	Concentration	Concentration Units	Decay Date
241-C-106	229Th	Sludge	2.10E-05	Ci	TE	1.3	g/mL	23	kL	2.95E-07	uCi/g	Jan 1 2001 12:00AM
241-C-106	231Pa	Sludge	2.82E-03	Ci	TE	1.3	g/mL	23	kL	3.95E-05	uCi/g	Jan 1 2001 12:00AM
241-C-106	232Th	Sludge	2.53E-03	Ci	S	1.56	g/mL	23	kL	7.04E-05	uCi/g	Jan 1 2001 12:00AM
241-C-106	232U	Sludge	1.65E-04	Ci	C	1.52	g/mL	23	kL	1.60E-05	uCi/g	Jan 1 2001 12:00AM
241-C-106	233U	Sludge	6.81E-04	Ci	C	1.52	g/mL	23	kL	6.16E-05	uCi/g	Jan 1 2001 12:00AM
241-C-106	234U	Sludge	1.34E-02	Ci	C	1.52	g/mL	23	kL	1.21E-03	uCi/g	Jan 1 2001 12:00AM
241-C-106	235U	Sludge	5.73E-04	Ci	C	1.52	g/mL	23	kL	5.18E-05	uCi/g	Jan 1 2001 12:00AM
241-C-106	236U	Sludge	2.39E-04	Ci	C	1.52	g/mL	23	kL	2.16E-05	uCi/g	Jan 1 2001 12:00AM
241-C-106	237Np	Sludge	1.66E-01	Ci	S	1.56	g/mL	23	kL	4.62E-03	uCi/g	Jan 1 2001 12:00AM
241-C-106	238Pu	Sludge	3.48E+00	Ci	C	1.56	g/mL	23	kL	4.44E-02	uCi/g	Jan 1 2001 12:00AM
241-C-106	238U	Sludge	1.37E-02	Ci	C	1.52	g/mL	23	kL	1.24E-03	uCi/g	Jan 1 2001 12:00AM
241-C-106	239Pu	Sludge	7.52E+01	Ci	C	1.56	g/mL	23	kL	9.07E-01	uCi/g	Jan 1 2001 12:00AM
241-C-106	240Pu	Sludge	1.54E+01	Ci	C	1.56	g/mL	23	kL	1.85E-01	uCi/g	Jan 1 2001 12:00AM
241-C-106	241Am	Sludge	2.25E+02	Ci	E	1.56	g/mL	23	kL	6.27E+00	uCi/g	Jan 1 2001 12:00AM
241-C-106	241Pu	Sludge	1.84E+02	Ci	E	1.56	g/mL	23	kL	5.14E+00	uCi/g	Jan 1 2001 12:00AM
241-C-106	242Cm	Sludge	3.42E-01	Ci	C	1.56	g/mL	23	kL	1.85E-03	uCi/g	Jan 1 2001 12:00AM
241-C-106	242Pu	Sludge	1.64E-03	Ci	C	1.56	g/mL	23	kL	1.98E-05	uCi/g	Jan 1 2001 12:00AM
241-C-106	243Am	Sludge	2.02E-03	Ci	TE	1.3	g/mL	23	kL	2.83E-05	uCi/g	Jan 1 2001 12:00AM
241-C-106	243Cm	Sludge	2.74E-02	Ci	C	1.56	g/mL	23	kL	1.70E-04	uCi/g	Jan 1 2001 12:00AM
241-C-106	244Cm	Sludge	5.82E-01	Ci	C	1.56	g/mL	23	kL	3.99E-03	uCi/g	Jan 1 2001 12:00AM
241-C-106	3H	Sludge	1.45E-01	Ci	S	1.56	g/mL	23	kL	4.04E-03	uCi/g	Jan 1 2001 12:00AM
241-C-106	59Ni	Sludge	6.13E+00	Ci	TE	1.3	g/mL	23	kL	8.59E-02	uCi/g	Jan 1 2001 12:00AM
241-C-106	60Co	Sludge	2.46E-01	Ci	TE	1.3	g/mL	23	kL	3.44E-03	uCi/g	Jan 1 2001 12:00AM
241-C-106	63Ni	Sludge	5.71E+02	Ci	TE	1.3	g/mL	23	kL	8.00E+00	uCi/g	Jan 1 2001 12:00AM
241-C-106	79Se	Sludge	2.77E-01	Ci	TE	1.3	g/mL	23	kL	3.88E-03	uCi/g	Jan 1 2001 12:00AM
241-C-106	90Sr	Sludge	2.82E+05	Ci	S	1.56	g/mL	23	kL	7.86E+03	uCi/g	Jan 1 2001 12:00AM
241-C-106	90Y	Sludge	2.82E+05	Ci	C		g/mL	23	kL		uCi/g	Jan 1 2001 12:00AM
241-C-106	93mNb	Sludge	1.08E+01	Ci	TE	1.3	g/mL	23	kL	1.52E-01	uCi/g	Jan 1 2001 12:00AM
241-C-106	93Zr	Sludge	1.16E+01	Ci	TE	1.3	g/mL	23	kL	1.63E-01	uCi/g	Jan 1 2001 12:00AM
241-C-106	99Tc	Sludge	1.03E+00	Ci	S	1.56	g/mL	23	kL	2.88E-02	uCi/g	Jan 1 2001 12:00AM
241-C-106	Ag	Sludge	2.63E+01	kg	S	1.52	g/mL	23	kL	7.53E+02	ug/g	Jan 1 2001 12:00AM
241-C-106	Al	Sludge	1.83E+03	kg	S	1.52	g/mL	23	kL	5.24E+04	ug/g	Jan 1 2001 12:00AM
241-C-106	As	Sludge	8.79E-01	kg	S	1.56	g/mL	23	kL	2.45E+01	ug/g	Jan 1 2001 12:00AM
241-C-106	B	Sludge	8.98E+00	kg	S	1.52	g/mL	23	kL	2.57E+02	ug/g	Jan 1 2001 12:00AM
241-C-106	Ba	Sludge	1.52E+01	kg	S	1.52	g/mL	23	kL	4.36E+02	ug/g	Jan 1 2001 12:00AM
241-C-106	Be	Sludge	1.10E-01	kg	S	1.56	g/mL	23	kL	3.07E+00	ug/g	Jan 1 2001 12:00AM
241-C-106	Bi	Sludge	1.11E-01	kg	TE	1.3	g/mL	23	kL	1.55E+00	ug/g	Jan 1 2001 12:00AM
241-C-106	Ca	Sludge	7.85E+01	kg	S	1.52	g/mL	23	kL	2.25E+03	ug/g	Jan 1 2001 12:00AM
241-C-106	Cd	Sludge	2.11E+00	kg	S	1.52	g/mL	23	kL	6.03E+01	ug/g	Jan 1 2001 12:00AM
241-C-106	Ce	Sludge	2.34E+01	kg	S	1.52	g/mL	23	kL	6.71E+02	ug/g	Jan 1 2001 12:00AM
241-C-106	Cl	Sludge	3.78E+00	kg	S	1.52	g/mL	23	kL	1.08E+02	ug/g	Jan 1 2001 12:00AM
241-C-106	CN	Sludge	3.53E-01	kg	S	1.56	g/mL	23	kL	9.85E+00	ug/g	Jan 1 2001 12:00AM
241-C-106	Co	Sludge	1.11E+00	kg	S	1.52	g/mL	23	kL	3.18E+01	ug/g	Jan 1 2001 12:00AM
241-C-106	Cr	Sludge	5.71E+01	kg	S	1.52	g/mL	23	kL	1.63E+03	ug/g	Jan 1 2001 12:00AM
241-C-106	Cu	Sludge	6.86E+00	kg	S	1.52	g/mL	23	kL	1.96E+02	ug/g	Jan 1 2001 12:00AM
241-C-106	F	Sludge	2.38E+00	kg	S	1.52	g/mL	23	kL	6.81E+01	ug/g	Jan 1 2001 12:00AM
241-C-106	Fe	Sludge	3.05E+03	kg	S	1.52	g/mL	23	kL	8.73E+04	ug/g	Jan 1 2001 12:00AM

CALCULATION SHEET

PROJECT: RPP-WTP
JOB NO.: 24590
CALC NO.: 24590-WTP-M4C-FRP-00001
SHEET REV: 0A
SHEET NO.: 112

BY: E. Berrios
DATE: 12/04/02

SUBJECT: Updated Emissions Run Feed Vector

Tank Name	Analyte	Waste Phase	Inventory	Inventory Units	Basis	Density	Density Units	Volume	Volume Units	Concentration	Concentration Units	Decay Date
241-C-106	Hg	Sludge	4.39E+00	kg	S	1.52	g/mL	23	kL	1.26E+02	ug/g	Jan 1 2001 12:00AM
241-C-106	K	Sludge	2.11E+01	kg	S	1.52	g/mL	23	kL	6.03E+02	ug/g	Jan 1 2001 12:00AM
241-C-106	La	Sludge	1.23E+01	kg	S	1.52	g/mL	23	kL	3.52E+02	ug/g	Jan 1 2001 12:00AM
241-C-106	Li	Sludge	1.33E+00	kg	S	1.52	g/mL	23	kL	3.80E+01	ug/g	Jan 1 2001 12:00AM
241-C-106	Mg	Sludge	2.02E+01	kg	S	1.52	g/mL	23	kL	5.79E+02	ug/g	Jan 1 2001 12:00AM
241-C-106	Mn	Sludge	7.59E+02	kg	S	1.52	g/mL	23	kL	2.17E+04	ug/g	Jan 1 2001 12:00AM
241-C-106	Mo	Sludge	3.85E-01	kg	S	1.56	g/mL	23	kL	1.07E+01	ug/g	Jan 1 2001 12:00AM
241-C-106	Na	Sludge	2.45E+03	kg	S	1.52	g/mL	23	kL	7.02E+04	ug/g	Jan 1 2001 12:00AM
241-C-106	Nd	Sludge	3.53E+01	kg	S	1.52	g/mL	23	kL	1.01E+03	ug/g	Jan 1 2001 12:00AM
241-C-106	Ni	Sludge	1.06E+02	kg	S	1.52	g/mL	23	kL	3.03E+03	ug/g	Jan 1 2001 12:00AM
241-C-106	NO2	Sludge	8.08E+01	kg	S	1.52	g/mL	23	kL	2.31E+03	ug/g	Jan 1 2001 12:00AM
241-C-106	NO3	Sludge	1.18E+01	kg	S	1.52	g/mL	23	kL	3.36E+02	ug/g	Jan 1 2001 12:00AM
241-C-106	Oxalate	Sludge	6.92E+01	kg	S	1.52	g/mL	23	kL	1.98E+03	ug/g	Jan 1 2001 12:00AM
241-C-106	Pb	Sludge	1.57E+02	kg	S	1.52	g/mL	23	kL	4.50E+03	ug/g	Jan 1 2001 12:00AM
241-C-106	Pd	Sludge	3.88E-01	kg	S	1.56	g/mL	23	kL	1.08E+01	ug/g	Jan 1 2001 12:00AM
241-C-106	PO4	Sludge	3.75E+02	kg	S	1.52	g/mL	23	kL	1.07E+04	ug/g	Jan 1 2001 12:00AM
241-C-106	Pr	Sludge	1.26E+01	kg	S	1.56	g/mL	23	kL	3.52E+02	ug/g	Jan 1 2001 12:00AM
241-C-106	Rb	Sludge	9.07E-02	kg	S	1.56	g/mL	23	kL	2.53E+00	ug/g	Jan 1 2001 12:00AM
241-C-106	Rh	Sludge	8.92E-01	kg	S	1.56	g/mL	23	kL	2.49E+01	ug/g	Jan 1 2001 12:00AM
241-C-106	Ru	Sludge	1.83E+01	kg	S	1.56	g/mL	23	kL	5.11E+02	ug/g	Jan 1 2001 12:00AM
241-C-106	Sb	Sludge	9.97E-02	kg	S	1.56	g/mL	23	kL	2.78E+00	ug/g	Jan 1 2001 12:00AM
241-C-106	Se	Sludge	2.11E-02	kg	S	1.56	g/mL	23	kL	5.87E-01	ug/g	Jan 1 2001 12:00AM
241-C-106	Si	Sludge	4.15E+01	kg	S	1.52	g/mL	23	kL	1.19E+03	ug/g	Jan 1 2001 12:00AM
241-C-106	SO4	Sludge	6.06E+01	kg	S	1.52	g/mL	23	kL	1.73E+03	ug/g	Jan 1 2001 12:00AM
241-C-106	Sr	Sludge	6.49E+00	kg	S	1.52	g/mL	23	kL	1.86E+02	ug/g	Jan 1 2001 12:00AM
241-C-106	Ta	Sludge	8.79E-02	kg	S	1.56	g/mL	23	kL	2.45E+00	ug/g	Jan 1 2001 12:00AM
241-C-106	Te	Sludge	3.98E+00	kg	S	1.56	g/mL	23	kL	1.11E+02	ug/g	Jan 1 2001 12:00AM
241-C-106	Th	Sludge	1.89E+01	kg	S	1.52	g/mL	23	kL	5.41E+02	ug/g	Jan 1 2001 12:00AM
241-C-106	Ti	Sludge	4.09E+00	kg	S	1.52	g/mL	23	kL	1.17E+02	ug/g	Jan 1 2001 12:00AM
241-C-106	TIC as CO3	Sludge	3.25E+03	kg	S	1.56	g/mL	23	kL	9.05E+04	ug/g	Jan 1 2001 12:00AM
241-C-106	Tl	Sludge	1.24E-01	kg	S	1.56	g/mL	23	kL	3.46E+00	ug/g	Jan 1 2001 12:00AM
241-C-106	UTOTAL	Sludge	4.11E+01	kg	S	1.52	g/mL	23	kL	1.18E+03	ug/g	Jan 1 2001 12:00AM
241-C-106	V	Sludge	1.37E+00	kg	S	1.52	g/mL	23	kL	3.91E+01	ug/g	Jan 1 2001 12:00AM
241-C-106	Y	Sludge	4.46E+00	kg	S	1.52	g/mL	23	kL	1.28E+02	ug/g	Jan 1 2001 12:00AM
241-C-106	Zn	Sludge	4.36E+00	kg	S	1.52	g/mL	23	kL	1.25E+02	ug/g	Jan 1 2001 12:00AM
241-C-106	Zr	Sludge	2.65E+00	kg	S	1.52	g/mL	23	kL	7.59E+01	ug/g	Jan 1 2001 12:00AM
241-SY-102	106Ru	Sludge (Solids)	7.01E-06	Ci	TS	1.59	g/mL	194	kL	2.47E-08	uCi/g	Jan 1 2001 12:00AM
241-SY-102	106Ru	Sludge (Solids)	6.47E-06	Ci	M	1.84	g/mL	186	kL	1.89E-08	uCi/g	Jan 1 2001 12:00AM
241-SY-102	113mCd	Sludge (Solids)	8.33E+00	Ci	TS	1.59	g/mL	194	kL	2.93E-02	uCi/g	Jan 1 2001 12:00AM
241-SY-102	113mCd	Sludge (Solids)	7.69E+00	Ci	M	1.84	g/mL	186	kL	2.25E-02	uCi/g	Jan 1 2001 12:00AM
241-SY-102	125Sb	Sludge (Solids)	3.92E+00	Ci	TS	1.59	g/mL	194	kL	1.38E-02	uCi/g	Jan 1 2001 12:00AM
241-SY-102	125Sb	Sludge (Solids)	3.62E+00	Ci	M	1.84	g/mL	186	kL	1.06E-02	uCi/g	Jan 1 2001 12:00AM
241-SY-102	126Sn	Sludge (Solids)	2.76E-01	Ci	TS	1.59	g/mL	194	kL	9.72E-04	uCi/g	Jan 1 2001 12:00AM
241-SY-102	126Sn	Sludge (Solids)	2.55E-01	Ci	M	1.84	g/mL	186	kL	7.46E-04	uCi/g	Jan 1 2001 12:00AM
241-SY-102	129I	Sludge (Solids)	4.55E-02	Ci	S	1.65	g/mL	186	kL	1.48E-04	uCi/g	Jan 1 2001 12:00AM
241-SY-102	129I	Sludge (Solids)	4.75E-02	Ci	S	1.65	g/mL	194	kL	1.48E-04	uCi/g	Jan 1 2001 12:00AM

CALCULATION SHEET

PROJECT: RPP-WTP
JOB NO.: 24590
CALC NO.: 24590-WTP-M4C-FRP-00001
SHEET REV: 0A
SHEET NO.: 113

BY: E. Berrios
DATE: 12/04/02

SUBJECT: Updated Emissions Run Feed Vector

Tank Name	Analyte	Waste Phase	Inventory	Inventory Units	Basis	Density	Density Units	Volume	Volume Units	Concentration	Concentration Units	Decay Date
241-SY-102	134Cs	Sludge (Solids)	4.48E-02	Ci	TS	1.59	g/mL	194	kL	1.58E-04	uCi/g	Jan 1 2001 12:00AM
241-SY-102	134Cs	Sludge (Solids)	5.79E-02	Ci	M	1.84	g/mL	186	kL	1.69E-04	uCi/g	Jan 1 2001 12:00AM
241-SY-102	137Cs	Sludge (Solids)	3.34E+04	Ci	S	1.65	g/mL	194	kL	1.04E+02	uCi/g	Jan 1 2001 12:00AM
241-SY-102	137Cs	Sludge (Solids)	3.20E+04	Ci	S	1.65	g/mL	186	kL	1.04E+02	uCi/g	Jan 1 2001 12:00AM
241-SY-102	137mBa	Sludge (Solids)	3.16E+04	Ci	C		g/mL	194	kL		uCi/g	Jan 1 2001 12:00AM
241-SY-102	137mBa	Sludge (Solids)	3.03E+04	Ci	C		g/mL	186	kL		uCi/g	Jan 1 2001 12:00AM
241-SY-102	14C	Sludge (Solids)	2.85E-01	Ci	S	1.65	g/mL	194	kL	8.91E-04	uCi/g	Jan 1 2001 12:00AM
241-SY-102	14C	Sludge (Solids)	2.73E-01	Ci	S	1.65	g/mL	186	kL	8.91E-04	uCi/g	Jan 1 2001 12:00AM
241-SY-102	151Sm	Sludge (Solids)	1.53E+03	Ci	TS	1.59	g/mL	194	kL	5.38E+00	uCi/g	Jan 1 2001 12:00AM
241-SY-102	151Sm	Sludge (Solids)	1.41E+03	Ci	M	1.84	g/mL	186	kL	4.12E+00	uCi/g	Jan 1 2001 12:00AM
241-SY-102	152Eu	Sludge (Solids)	3.90E-01	Ci	TS	1.59	g/mL	194	kL	1.37E-03	uCi/g	Jan 1 2001 12:00AM
241-SY-102	152Eu	Sludge (Solids)	3.59E-01	Ci	M	1.84	g/mL	186	kL	1.05E-03	uCi/g	Jan 1 2001 12:00AM
241-SY-102	154Eu	Sludge (Solids)	1.48E+02	Ci	S	1.44	g/mL	194	kL	5.29E-01	uCi/g	Jan 1 2001 12:00AM
241-SY-102	154Eu	Sludge (Solids)	4.25E+01	Ci	M	1.84	g/mL	186	kL	1.24E-01	uCi/g	Jan 1 2001 12:00AM
241-SY-102	155Eu	Sludge (Solids)	9.35E+01	Ci	S	1.44	g/mL	194	kL	3.35E-01	uCi/g	Jan 1 2001 12:00AM
241-SY-102	155Eu	Sludge (Solids)	1.15E+01	Ci	M	1.84	g/mL	186	kL	3.35E-02	uCi/g	Jan 1 2001 12:00AM
241-SY-102	226Ra	Sludge (Solids)	2.04E-05	Ci	TS	1.59	g/mL	194	kL	7.18E-08	uCi/g	Jan 1 2001 12:00AM
241-SY-102	226Ra	Sludge (Solids)	1.88E-05	Ci	M	1.84	g/mL	186	kL	5.50E-08	uCi/g	Jan 1 2001 12:00AM
241-SY-102	227Ac	Sludge (Solids)	2.13E-04	Ci	TS	1.59	g/mL	194	kL	7.49E-07	uCi/g	Jan 1 2001 12:00AM
241-SY-102	227Ac	Sludge (Solids)	1.96E-04	Ci	M	1.84	g/mL	186	kL	5.74E-07	uCi/g	Jan 1 2001 12:00AM
241-SY-102	228Ra	Sludge (Solids)	1.46E-02	Ci	TS	1.59	g/mL	194	kL	5.13E-05	uCi/g	Jan 1 2001 12:00AM
241-SY-102	228Ra	Sludge (Solids)	1.56E-02	Ci	M	1.84	g/mL	186	kL	4.55E-05	uCi/g	Jan 1 2001 12:00AM
241-SY-102	229Th	Sludge (Solids)	3.52E-04	Ci	TS	1.59	g/mL	194	kL	1.24E-06	uCi/g	Jan 1 2001 12:00AM
241-SY-102	229Th	Sludge (Solids)	3.25E-04	Ci	M	1.84	g/mL	186	kL	9.51E-07	uCi/g	Jan 1 2001 12:00AM
241-SY-102	231Pa	Sludge (Solids)	5.62E-04	Ci	TS	1.59	g/mL	194	kL	1.98E-06	uCi/g	Jan 1 2001 12:00AM
241-SY-102	231Pa	Sludge (Solids)	5.19E-04	Ci	M	1.84	g/mL	186	kL	1.52E-06	uCi/g	Jan 1 2001 12:00AM
241-SY-102	232Th	Sludge (Solids)	1.65E-02	Ci	S	1.65	g/mL	194	kL	5.14E-05	uCi/g	Jan 1 2001 12:00AM
241-SY-102	232Th	Sludge (Solids)	1.58E-02	Ci	S	1.65	g/mL	186	kL	5.14E-05	uCi/g	Jan 1 2001 12:00AM
241-SY-102	232U	Sludge (Solids)	3.66E-02	Ci	C	1.65	g/mL	194	kL	1.14E-04	uCi/g	Jan 1 2001 12:00AM
241-SY-102	232U	Sludge (Solids)	6.75E-02	Ci	C	1.65	g/mL	186	kL	2.20E-04	uCi/g	Jan 1 2001 12:00AM
241-SY-102	233U	Sludge (Solids)	1.50E-01	Ci	C	1.65	g/mL	194	kL	4.69E-04	uCi/g	Jan 1 2001 12:00AM
241-SY-102	233U	Sludge (Solids)	2.77E-01	Ci	C	1.65	g/mL	186	kL	9.03E-04	uCi/g	Jan 1 2001 12:00AM
241-SY-102	234U	Sludge (Solids)	8.38E-02	Ci	C	1.65	g/mL	194	kL	2.62E-04	uCi/g	Jan 1 2001 12:00AM
241-SY-102	234U	Sludge (Solids)	1.54E-01	Ci	C	1.65	g/mL	186	kL	5.02E-04	uCi/g	Jan 1 2001 12:00AM
241-SY-102	235U	Sludge (Solids)	3.53E-03	Ci	C	1.65	g/mL	194	kL	1.10E-05	uCi/g	Jan 1 2001 12:00AM
241-SY-102	235U	Sludge (Solids)	6.46E-03	Ci	C	1.65	g/mL	186	kL	2.11E-05	uCi/g	Jan 1 2001 12:00AM
241-SY-102	236U	Sludge (Solids)	2.02E-03	Ci	C	1.65	g/mL	194	kL	6.32E-06	uCi/g	Jan 1 2001 12:00AM
241-SY-102	236U	Sludge (Solids)	3.76E-03	Ci	C	1.65	g/mL	186	kL	1.23E-05	uCi/g	Jan 1 2001 12:00AM
241-SY-102	237Np	Sludge (Solids)	3.80E-01	Ci	S	1.65	g/mL	194	kL	1.19E-03	uCi/g	Jan 1 2001 12:00AM
241-SY-102	237Np	Sludge (Solids)	3.64E-01	Ci	S	1.65	g/mL	186	kL	1.19E-03	uCi/g	Jan 1 2001 12:00AM
241-SY-102	238Pu	Sludge (Solids)	2.83E+02	Ci	S	1.65	g/mL	194	kL	8.85E-01	uCi/g	Jan 1 2001 12:00AM
241-SY-102	238Pu	Sludge (Solids)	2.72E+02	Ci	S	1.65	g/mL	186	kL	8.85E-01	uCi/g	Jan 1 2001 12:00AM
241-SY-102	238U	Sludge (Solids)	7.99E-02	Ci	C	1.65	g/mL	194	kL	2.50E-04	uCi/g	Jan 1 2001 12:00AM
241-SY-102	238U	Sludge (Solids)	1.46E-01	Ci	C	1.65	g/mL	186	kL	4.76E-04	uCi/g	Jan 1 2001 12:00AM
241-SY-102	239Pu	Sludge (Solids)	2.67E+03	Ci	C	1.65	g/mL	194	kL	8.33E+00	uCi/g	Jan 1 2001 12:00AM
241-SY-102	239Pu	Sludge (Solids)	1.15E+03	Ci	S	1.44	g/mL	186	kL	4.30E+00	uCi/g	Jan 1 2001 12:00AM
241-SY-102	240Pu	Sludge (Solids)	4.19E+02	Ci	C	1.65	g/mL	194	kL	1.31E+00	uCi/g	Jan 1 2001 12:00AM

CALCULATION SHEET

PROJECT: RPP-WTP
JOB NO.: 24590
CALC NO.: 24590-WTP-M4C-FRP-00001
SHEET REV: 0A
SHEET NO.: 114

BY: E. Berrios
DATE: 12/04/02

SUBJECT: Updated Emissions Run Feed Vector

Tank Name	Analyte	Waste Phase	Inventory	Inventory Units	Basis	Density	Density Units	Volume	Volume Units	Concentration	Concentration Units	Decay Date
241-SY-102	240Pu	Sludge (Solids)	4.42E+02	Ci	S	1.44	g/mL	186	kL	1.65E+00	uCi/g	Jan 1 2001 12:00AM
241-SY-102	241Am	Sludge (Solids)	1.20E+04	Ci	S	1.65	g/mL	194	kL	3.75E+01	uCi/g	Jan 1 2001 12:00AM
241-SY-102	241Am	Sludge (Solids)	1.15E+04	Ci	S	1.65	g/mL	186	kL	3.75E+01	uCi/g	Jan 1 2001 12:00AM
241-SY-102	241Pu	Sludge (Solids)	3.24E+03	Ci	C	1.65	g/mL	194	kL	1.01E+01	uCi/g	Jan 1 2001 12:00AM
241-SY-102	241Pu	Sludge (Solids)	5.87E+01	Ci	S	1.44	g/mL	186	kL	2.19E-01	uCi/g	Jan 1 2001 12:00AM
241-SY-102	242Cm	Sludge (Solids)	5.07E-02	Ci	C	1.65	g/mL	194	kL	1.58E-04	uCi/g	Jan 1 2001 12:00AM
241-SY-102	242Cm	Sludge (Solids)	7.60E-04	Ci	C	1.65	g/mL	186	kL	2.48E-06	uCi/g	Jan 1 2001 12:00AM
241-SY-102	242Pu	Sludge (Solids)	2.47E-02	Ci	C	1.65	g/mL	194	kL	7.72E-05	uCi/g	Jan 1 2001 12:00AM
241-SY-102	242Pu	Sludge (Solids)	1.80E-01	Ci	S	1.44	g/mL	186	kL	6.72E-04	uCi/g	Jan 1 2001 12:00AM
241-SY-102	243Am	Sludge (Solids)	3.93E-01	Ci	C	1.65	g/mL	194	kL	1.23E-03	uCi/g	Jan 1 2001 12:00AM
241-SY-102	243Am	Sludge (Solids)	2.80E-03	Ci	C	1.65	g/mL	186	kL	9.13E-06	uCi/g	Jan 1 2001 12:00AM
241-SY-102	243Cm	Sludge (Solids)	4.61E-01	Ci	C		g/mL	194	kL		uCi/g	Jan 1 2001 12:00AM
241-SY-102	243Cm	Sludge (Solids)	4.85E-05	Ci	C	1.65	g/mL	186	kL	1.58E-07	uCi/g	Jan 1 2001 12:00AM
241-SY-102	244Cm	Sludge (Solids)	1.10E+01	Ci	C		g/mL	194	kL		uCi/g	Jan 1 2001 12:00AM
241-SY-102	244Cm	Sludge (Solids)	5.23E-04	Ci	C	1.65	g/mL	186	kL	1.70E-06	uCi/g	Jan 1 2001 12:00AM
241-SY-102	3H	Sludge (Solids)	3.50E-01	Ci	S	1.65	g/mL	194	kL	1.09E-03	uCi/g	Jan 1 2001 12:00AM
241-SY-102	3H	Sludge (Solids)	3.35E-01	Ci	S	1.65	g/mL	186	kL	1.09E-03	uCi/g	Jan 1 2001 12:00AM
241-SY-102	59Ni	Sludge (Solids)	1.44E-01	Ci	TS	1.59	g/mL	194	kL	5.06E-04	uCi/g	Jan 1 2001 12:00AM
241-SY-102	59Ni	Sludge (Solids)	1.14E-01	Ci	M	1.84	g/mL	186	kL	3.32E-04	uCi/g	Jan 1 2001 12:00AM
241-SY-102	60Co	Sludge (Solids)	6.24E+00	Ci	TS	1.59	g/mL	194	kL	2.20E-02	uCi/g	Jan 1 2001 12:00AM
241-SY-102	60Co	Sludge (Solids)	1.89E+00	Ci	M	1.84	g/mL	186	kL	5.52E-03	uCi/g	Jan 1 2001 12:00AM
241-SY-102	63Ni	Sludge (Solids)	1.34E+01	Ci	TS	1.59	g/mL	194	kL	4.72E-02	uCi/g	Jan 1 2001 12:00AM
241-SY-102	63Ni	Sludge (Solids)	1.06E+01	Ci	M	1.84	g/mL	186	kL	3.10E-02	uCi/g	Jan 1 2001 12:00AM
241-SY-102	79Se	Sludge (Solids)	4.57E-02	Ci	TS	1.59	g/mL	194	kL	1.61E-04	uCi/g	Jan 1 2001 12:00AM
241-SY-102	79Se	Sludge (Solids)	4.22E-02	Ci	M	1.84	g/mL	186	kL	1.23E-04	uCi/g	Jan 1 2001 12:00AM
241-SY-102	90Sr	Sludge (Solids)	3.44E+04	Ci	S	1.65	g/mL	194	kL	1.07E+02	uCi/g	Jan 1 2001 12:00AM
241-SY-102	90Sr	Sludge (Solids)	3.29E+04	Ci	S	1.65	g/mL	186	kL	1.07E+02	uCi/g	Jan 1 2001 12:00AM
241-SY-102	90Y	Sludge (Solids)	3.44E+04	Ci	C		g/mL	194	kL		uCi/g	Jan 1 2001 12:00AM
241-SY-102	90Y	Sludge (Solids)	3.29E+04	Ci	C		g/mL	186	kL		uCi/g	Jan 1 2001 12:00AM
241-SY-102	93mNb	Sludge (Solids)	1.82E+00	Ci	TS	1.59	g/mL	194	kL	6.40E-03	uCi/g	Jan 1 2001 12:00AM
241-SY-102	93mNb	Sludge (Solids)	1.68E+00	Ci	M	1.84	g/mL	186	kL	4.91E-03	uCi/g	Jan 1 2001 12:00AM
241-SY-102	93Zr	Sludge (Solids)	2.24E+00	Ci	TS	1.59	g/mL	194	kL	7.90E-03	uCi/g	Jan 1 2001 12:00AM
241-SY-102	93Zr	Sludge (Solids)	2.07E+00	Ci	M	1.84	g/mL	186	kL	6.05E-03	uCi/g	Jan 1 2001 12:00AM
241-SY-102	99Tc	Sludge (Solids)	6.47E+01	Ci	S	1.65	g/mL	194	kL	2.02E-01	uCi/g	Jan 1 2001 12:00AM
241-SY-102	99Tc	Sludge (Solids)	6.20E+01	Ci	S	1.65	g/mL	186	kL	2.02E-01	uCi/g	Jan 1 2001 12:00AM
241-SY-102	Ag	Sludge (Solids)	2.83E+01	kg	S	1.65	g/mL	186	kL	9.21E+01	ug/g	Jan 1 2001 12:00AM
241-SY-102	Ag	Sludge (Solids)	1.54E+00	kg	S	1.65	g/mL	194	kL	4.80E+00	ug/g	Jan 1 2001 12:00AM
241-SY-102	Al	Sludge (Solids)	1.39E+04	kg	S	1.65	g/mL	194	kL	4.33E+04	ug/g	Jan 1 2001 12:00AM
241-SY-102	Al	Sludge (Solids)	8.87E+03	kg	S	1.65	g/mL	186	kL	2.89E+04	ug/g	Jan 1 2001 12:00AM
241-SY-102	As	Sludge (Solids)	3.04E+00	kg	S	1.65	g/mL	194	kL	9.49E+00	ug/g	Jan 1 2001 12:00AM
241-SY-102	As	Sludge (Solids)	2.91E+00	kg	S	1.65	g/mL	186	kL	9.49E+00	ug/g	Jan 1 2001 12:00AM
241-SY-102	B	Sludge (Solids)	1.38E+01	kg	S	1.65	g/mL	186	kL	4.51E+01	ug/g	Jan 1 2001 12:00AM
241-SY-102	B	Sludge (Solids)	1.52E+01	kg	S	1.65	g/mL	194	kL	4.75E+01	ug/g	Jan 1 2001 12:00AM
241-SY-102	Ba	Sludge (Solids)	1.31E+01	kg	S	1.65	g/mL	186	kL	4.27E+01	ug/g	Jan 1 2001 12:00AM
241-SY-102	Ba	Sludge (Solids)	7.81E+00	kg	S	1.65	g/mL	194	kL	2.44E+01	ug/g	Jan 1 2001 12:00AM
241-SY-102	Be	Sludge (Solids)	5.47E-01	kg	S	1.44	g/mL	194	kL	1.96E+00	ug/g	Jan 1 2001 12:00AM
241-SY-102	Be	Sludge (Solids)	1.49E+00	kg	S	1.65	g/mL	186	kL	4.84E+00	ug/g	Jan 1 2001 12:00AM

CALCULATION SHEET

PROJECT: RPP-WTP
JOB NO.: 24590
CALC NO.: 24590-WTP-M4C-FRP-00001
SHEET REV: 0A
SHEET NO.: 116

BY: F. Berrios
DATE: 12/04/02

SUBJECT: Updated Emissions Run Feed Vector

Tank Name	Analyte	Waste Phase	Inventory	Inventory Units	Basis	Density	Density Units	Volume	Volume Units	Concentration	Concentration Units	Decay Date
241-SY-102	Bi	Sludge (Solids)	6.66E+01	kg	S	1.65	g/mL	194	kL	2.08E+02	ug/g	Jan 1 2001 12:00AM
241-SY-102	Bi	Sludge (Solids)	2.73E+03	kg	S	1.65	g/mL	186	kL	8.91E+03	ug/g	Jan 1 2001 12:00AM
241-SY-102	Ca	Sludge (Solids)	1.74E+02	kg	S	1.65	g/mL	194	kL	5.43E+02	ug/g	Jan 1 2001 12:00AM
241-SY-102	Ca	Sludge (Solids)	8.95E+02	kg	S	1.65	g/mL	186	kL	2.92E+03	ug/g	Jan 1 2001 12:00AM
241-SY-102	Cd	Sludge (Solids)	3.26E+01	kg	S	1.65	g/mL	194	kL	1.02E+02	ug/g	Jan 1 2001 12:00AM
241-SY-102	Cd	Sludge (Solids)	8.77E+01	kg	S	1.65	g/mL	186	kL	2.86E+02	ug/g	Jan 1 2001 12:00AM
241-SY-102	Ce	Sludge (Solids)	1.48E+01	kg	S	1.65	g/mL	194	kL	4.63E+01	ug/g	Jan 1 2001 12:00AM
241-SY-102	Ce	Sludge (Solids)	2.43E+01	kg	S	1.65	g/mL	186	kL	7.91E+01	ug/g	Jan 1 2001 12:00AM
241-SY-102	Cl	Sludge (Solids)	7.81E+02	kg	S	1.65	g/mL	194	kL	2.44E+03	ug/g	Jan 1 2001 12:00AM
241-SY-102	Cl	Sludge (Solids)	8.16E+02	kg	S	1.65	g/mL	186	kL	2.66E+03	ug/g	Jan 1 2001 12:00AM
241-SY-102	Co	Sludge (Solids)	4.47E+00	kg	S	1.65	g/mL	194	kL	1.39E+01	ug/g	Jan 1 2001 12:00AM
241-SY-102	Co	Sludge (Solids)	3.44E+00	kg	S	1.65	g/mL	186	kL	1.12E+01	ug/g	Jan 1 2001 12:00AM
241-SY-102	Cr	Sludge (Solids)	9.47E+03	kg	S	1.65	g/mL	194	kL	2.96E+04	ug/g	Jan 1 2001 12:00AM
241-SY-102	Cr	Sludge (Solids)	3.92E+03	kg	S	1.65	g/mL	186	kL	1.28E+04	ug/g	Jan 1 2001 12:00AM
241-SY-102	Cu	Sludge (Solids)	1.09E+00	kg	S	1.44	g/mL	194	kL	3.92E+00	ug/g	Jan 1 2001 12:00AM
241-SY-102	Cu	Sludge (Solids)	1.74E+01	kg	S	1.65	g/mL	186	kL	5.67E+01	ug/g	Jan 1 2001 12:00AM
241-SY-102	F	Sludge (Solids)	2.67E+02	kg	S	1.65	g/mL	194	kL	8.35E+02	ug/g	Jan 1 2001 12:00AM
241-SY-102	F	Sludge (Solids)	3.25E+02	kg	S	1.65	g/mL	186	kL	1.06E+03	ug/g	Jan 1 2001 12:00AM
241-SY-102	Fe	Sludge (Solids)	6.76E+02	kg	S	1.65	g/mL	194	kL	2.11E+03	ug/g	Jan 1 2001 12:00AM
241-SY-102	Fe	Sludge (Solids)	6.93E+03	kg	S	1.65	g/mL	186	kL	2.26E+04	ug/g	Jan 1 2001 12:00AM
241-SY-102	Hg	Sludge (Solids)	2.97E+00	kg	S	1.65	g/mL	194	kL	9.29E+00	ug/g	Jan 1 2001 12:00AM
241-SY-102	Hg	Sludge (Solids)	2.85E+00	kg	S	1.65	g/mL	186	kL	9.29E+00	ug/g	Jan 1 2001 12:00AM
241-SY-102	K	Sludge (Solids)	3.58E+02	kg	S	1.65	g/mL	194	kL	1.12E+03	ug/g	Jan 1 2001 12:00AM
241-SY-102	K	Sludge (Solids)	4.05E+02	kg	S	1.65	g/mL	186	kL	1.32E+03	ug/g	Jan 1 2001 12:00AM
241-SY-102	La	Sludge (Solids)	1.10E+01	kg	S	1.65	g/mL	194	kL	3.45E+01	ug/g	Jan 1 2001 12:00AM
241-SY-102	La	Sludge (Solids)	3.72E+01	kg	S	1.65	g/mL	186	kL	1.21E+02	ug/g	Jan 1 2001 12:00AM
241-SY-102	Li	Sludge (Solids)	1.04E+01	kg	S	1.65	g/mL	194	kL	3.24E+01	ug/g	Jan 1 2001 12:00AM
241-SY-102	Li	Sludge (Solids)	1.45E+01	kg	S	1.65	g/mL	186	kL	4.72E+01	ug/g	Jan 1 2001 12:00AM
241-SY-102	Mg	Sludge (Solids)	2.22E+02	kg	S	1.65	g/mL	186	kL	7.22E+02	ug/g	Jan 1 2001 12:00AM
241-SY-102	Mg	Sludge (Solids)	1.13E+01	kg	S	1.44	g/mL	194	kL	4.04E+01	ug/g	Jan 1 2001 12:00AM
241-SY-102	Mn	Sludge (Solids)	1.84E+02	kg	S	1.65	g/mL	194	kL	5.76E+02	ug/g	Jan 1 2001 12:00AM
241-SY-102	Mn	Sludge (Solids)	1.60E+03	kg	S	1.65	g/mL	186	kL	5.21E+03	ug/g	Jan 1 2001 12:00AM
241-SY-102	Na	Sludge (Solids)	4.06E+04	kg	S	1.65	g/mL	194	kL	1.27E+05	ug/g	Jan 1 2001 12:00AM
241-SY-102	Na	Sludge (Solids)	3.40E+04	kg	S	1.65	g/mL	186	kL	1.11E+05	ug/g	Jan 1 2001 12:00AM
241-SY-102	Nd	Sludge (Solids)	2.79E+01	kg	S	1.65	g/mL	186	kL	9.08E+01	ug/g	Jan 1 2001 12:00AM
241-SY-102	Nd	Sludge (Solids)	4.04E+01	kg	S	1.65	g/mL	194	kL	1.26E+02	ug/g	Jan 1 2001 12:00AM
241-SY-102	Ni	Sludge (Solids)	1.26E+02	kg	S	1.65	g/mL	194	kL	3.95E+02	ug/g	Jan 1 2001 12:00AM
241-SY-102	Ni	Sludge (Solids)	1.01E+02	kg	S	1.65	g/mL	186	kL	3.29E+02	ug/g	Jan 1 2001 12:00AM
241-SY-102	NO2	Sludge (Solids)	1.25E+04	kg	S	1.65	g/mL	194	kL	3.89E+04	ug/g	Jan 1 2001 12:00AM
241-SY-102	NO2	Sludge (Solids)	1.06E+04	kg	S	1.65	g/mL	186	kL	3.45E+04	ug/g	Jan 1 2001 12:00AM
241-SY-102	NO3	Sludge (Solids)	1.90E+04	kg	S	1.65	g/mL	194	kL	5.95E+04	ug/g	Jan 1 2001 12:00AM
241-SY-102	NO3	Sludge (Solids)	2.36E+04	kg	S	1.65	g/mL	186	kL	7.70E+04	ug/g	Jan 1 2001 12:00AM
241-SY-102	OH	Sludge (Solids)	4.11E+03	kg	S	1.44	g/mL	194	kL	1.47E+04	ug/g	Jan 1 2001 12:00AM
241-SY-102	Oxalate	Sludge (Solids)	2.60E+04	kg	S	1.65	g/mL	194	kL	8.12E+04	ug/g	Jan 1 2001 12:00AM
241-SY-102	Oxalate	Sludge (Solids)	7.62E+03	kg	S	1.65	g/mL	186	kL	2.48E+04	ug/g	Jan 1 2001 12:00AM
241-SY-102	Pb	Sludge (Solids)	1.79E+02	kg	S	1.65	g/mL	194	kL	5.59E+02	ug/g	Jan 1 2001 12:00AM
241-SY-102	Pb	Sludge (Solids)	3.74E+02	kg	S	1.65	g/mL	186	kL	1.22E+03	ug/g	Jan 1 2001 12:00AM

CALCULATION SHEET

PROJECT: RPP-WTP
JOB NO.: 24590
CALC NO.: 24590-WTP-M4C-FRP-00001
SHEET REV: 0A
SHEET NO.: 116

BY: E. Bartlos
DATE: 12/04/02

SUBJECT: Updated Emissions Run Feed Vector

Tank Name	Analyte	Waste Phase	Inventory	Inventory Units	Basis	Density	Density Units	Volume	Volume Units	Concentration	Concentration Units	Decay Date
241-SY-102	PO4	Sludge (Solids)	1.10E+03	kg	S	1.65	g/mL	194	kL	3.44E+03	ug/g	Jan 1 2001 12:00AM
241-SY-102	PO4	Sludge (Solids)	5.36E+03	kg	S	1.65	g/mL	186	kL	1.75E+04	ug/g	Jan 1 2001 12:00AM
241-SY-102	Rh	Sludge (Solids)	1.23E+01	kg	S	1.65	g/mL	194	kL	3.85E+01	ug/g	Jan 1 2001 12:00AM
241-SY-102	Rb	Sludge (Solids)	1.18E+01	kg	S	1.65	g/mL	186	kL	3.85E+01	ug/g	Jan 1 2001 12:00AM
241-SY-102	Sb	Sludge (Solids)	9.22E-01	kg	S	1.65	g/mL	194	kL	2.88E+00	ug/g	Jan 1 2001 12:00AM
241-SY-102	Sb	Sludge (Solids)	8.84E-01	kg	S	1.65	g/mL	186	kL	2.88E+00	ug/g	Jan 1 2001 12:00AM
241-SY-102	Se	Sludge (Solids)	2.89E+00	kg	S	1.65	g/mL	186	kL	9.42E+00	ug/g	Jan 1 2001 12:00AM
241-SY-102	Se	Sludge (Solids)	3.01E+00	kg	S	1.65	g/mL	194	kL	9.42E+00	ug/g	Jan 1 2001 12:00AM
241-SY-102	Si	Sludge (Solids)	1.30E+02	kg	S	1.65	g/mL	194	kL	4.07E+02	ug/g	Jan 1 2001 12:00AM
241-SY-102	Si	Sludge (Solids)	8.10E+02	kg	S	1.65	g/mL	186	kL	2.64E+03	ug/g	Jan 1 2001 12:00AM
241-SY-102	SO4	Sludge (Solids)	6.50E+02	kg	S	1.65	g/mL	194	kL	2.03E+03	ug/g	Jan 1 2001 12:00AM
241-SY-102	SO4	Sludge (Solids)	1.29E+03	kg	S	1.65	g/mL	186	kL	4.21E+03	ug/g	Jan 1 2001 12:00AM
241-SY-102	Sr	Sludge (Solids)	2.75E+00	kg	S	1.65	g/mL	194	kL	8.59E+00	ug/g	Jan 1 2001 12:00AM
241-SY-102	Sr	Sludge (Solids)	3.56E+01	kg	S	1.65	g/mL	186	kL	1.16E+02	ug/g	Jan 1 2001 12:00AM
241-SY-102	Ta	Sludge (Solids)	1.27E+00	kg	S	1.65	g/mL	194	kL	3.98E+00	ug/g	Jan 1 2001 12:00AM
241-SY-102	Ta	Sludge (Solids)	1.22E+00	kg	S	1.65	g/mL	186	kL	3.98E+00	ug/g	Jan 1 2001 12:00AM
241-SY-102	Te	Sludge (Solids)	7.23E-01	kg	S	1.65	g/mL	186	kL	2.36E+00	ug/g	Jan 1 2001 12:00AM
241-SY-102	Te	Sludge (Solids)	7.54E-01	kg	S	1.65	g/mL	194	kL	2.36E+00	ug/g	Jan 1 2001 12:00AM
241-SY-102	Th	Sludge (Solids)	1.68E+02	kg	S	1.65	g/mL	194	kL	5.26E+02	ug/g	Jan 1 2001 12:00AM
241-SY-102	Th	Sludge (Solids)	1.61E+02	kg	S	1.65	g/mL	186	kL	5.26E+02	ug/g	Jan 1 2001 12:00AM
241-SY-102	Ti	Sludge (Solids)	2.85E+00	kg	S	1.65	g/mL	194	kL	8.90E+00	ug/g	Jan 1 2001 12:00AM
241-SY-102	Ti	Sludge (Solids)	9.12E+00	kg	S	1.65	g/mL	186	kL	2.97E+01	ug/g	Jan 1 2001 12:00AM
241-SY-102	TIC as CO3	Sludge (Solids)	5.84E+03	kg	S	1.65	g/mL	194	kL	1.82E+04	ug/g	Jan 1 2001 12:00AM
241-SY-102	TIC as CO3	Sludge (Solids)	5.60E+03	kg	S	1.65	g/mL	186	kL	1.82E+04	ug/g	Jan 1 2001 12:00AM
241-SY-102	Tl	Sludge (Solids)	2.35E-01	kg	S	1.65	g/mL	194	kL	7.33E-01	ug/g	Jan 1 2001 12:00AM
241-SY-102	Tl	Sludge (Solids)	2.25E-01	kg	S	1.65	g/mL	186	kL	7.33E-01	ug/g	Jan 1 2001 12:00AM
241-SY-102	UTOTAL	Sludge (Solids)	2.39E+02	kg	S	1.65	g/mL	194	kL	7.47E+02	ug/g	Jan 1 2001 12:00AM
241-SY-102	UTOTAL	Sludge (Solids)	4.38E+02	kg	S	1.65	g/mL	186	kL	1.43E+03	ug/g	Jan 1 2001 12:00AM
241-SY-102	V	Sludge (Solids)	4.02E+00	kg	S	1.44	g/mL	186	kL	1.50E+01	ug/g	Jan 1 2001 12:00AM
241-SY-102	V	Sludge (Solids)	5.04E+00	kg	S	1.65	g/mL	194	kL	1.57E+01	ug/g	Jan 1 2001 12:00AM
241-SY-102	Y	Sludge (Solids)	5.52E+00	kg	S	1.65	g/mL	186	kL	1.80E+01	ug/g	Jan 1 2001 12:00AM
241-SY-102	Y	Sludge (Solids)	5.76E+00	kg	S	1.65	g/mL	194	kL	1.80E+01	ug/g	Jan 1 2001 12:00AM
241-SY-102	Zn	Sludge (Solids)	3.06E+01	kg	S	1.65	g/mL	194	kL	9.55E+01	ug/g	Jan 1 2001 12:00AM
241-SY-102	Zn	Sludge (Solids)	6.79E+01	kg	S	1.65	g/mL	186	kL	2.21E+02	ug/g	Jan 1 2001 12:00AM
241-SY-102	Zr	Sludge (Solids)	2.03E+01	kg	S	1.65	g/mL	194	kL	6.35E+01	ug/g	Jan 1 2001 12:00AM
241-SY-102	Zr	Sludge (Solids)	5.48E+01	kg	S	1.65	g/mL	186	kL	1.79E+02	ug/g	Jan 1 2001 12:00AM
241-AW-104	106Ru	Total	4.14E-05	Ci	E							Jan 1 2001 12:00AM
241-AW-104	106Ru	Salt Cake (Liquids)	5.15E-06	Ci	TE	1.6	g/mL	136	kL	2.37E-08	uCi/g	Jan 1 2001 12:00AM
241-AW-104	106Ru	Salt Cake (Solids)	3.46E-05	Ci	TS	1.58	g/mL	457	kL	4.79E-08	uCi/g	Jan 1 2001 12:00AM
241-AW-104	106Ru	Sludge (Liquids)	1.65E-06	Ci	TE	1.6	g/mL	62	kL	1.66E-08	uCi/g	Jan 1 2001 12:00AM
241-AW-104	106Ru	Sludge (Solids)	0.00E+00	Ci	TE	1.2	g/mL	188	kL	0.00E+00	uCi/g	Jan 1 2001 12:00AM
241-AW-104	106Ru	Supernatant	0.00E+00	Ci	TE	1.02	g/mL	347	kL	0.00E+00	uCi/g	Jan 1 2001 12:00AM
241-AW-104	113mCd	Total	3.76E+01	Ci	E							Jan 1 2001 12:00AM
241-AW-104	113mCd	Salt Cake (Liquids)	4.68E+00	Ci	TE	1.6	g/mL	136	kL	2.15E-02	uCi/g	Jan 1 2001 12:00AM
241-AW-104	113mCd	Salt Cake (Solids)	3.14E+01	Ci	TS	1.58	g/mL	457	kL	4.35E-02	uCi/g	Jan 1 2001 12:00AM

Decay Date
2001 12:00AM
2001 12:00AM
2001 12:00AM
2001 12:00AM
2001 12:00AM
2001 12:00AM
2001 12:00AM
2001 12:00AM
2001 12:00AM
2001 12:00AM
2001 12:00AM
2001 12:00AM
2001 12:00AM
2001 12:00AM
2001 12:00AM
2001 12:00AM
2001 12:00AM
2001 12:00AM
2001 12:00AM
2001 12:00AM
2001 12:00AM
2001 12:00AM
2001 12:00AM
2001 12:00AM
2001 12:00AM
2001 12:00AM
2001 12:00AM
2001 12:00AM
2001 12:00AM
2001 12:00AM
2001 12:00AM
2001 12:00AM
2001 12:00AM
2001 12:00AM
2001 12:00AM
2001 12:00AM
2001 12:00AM
2001 12:00AM
2001 12:00AM
2001 12:00AM
2001 12:00AM
2001 12:00AM
2001 12:00AM
2001 12:00AM
2001 12:00AM
2001 12:00AM
2001 12:00AM

CALCULATION SHEET

PROJECT: RPP-WTP
JOB NO.: 24590
CALC NO.: 24590-WTP-M4C-FRP-00001
SHEET REV: 0A
SHEET NO.: 118

BY: E. Berrios
DATE: 12/04/02

SUBJECT: Updated Emissions Run Feed Vector

Tank Name	Analyte	Waste Phase	Inventory	Inventory Units	Basis	Density	Density Units	Volume	Volume Units	Concentration	Concentration Units	Decay Date
241-AW-104	151Sm	Salt Cake (Solids)	5.35E+03	Ci	TS	1.58	g/mL	457	kL	7.41E+00	uCi/g	Jan 1 2001 12:00AM
241-AW-104	151Sm	Sludge (Liquids)	2.55E+02	Ci	TE	1.6	g/mL	62	kL	2.57E+00	uCi/g	Jan 1 2001 12:00AM
241-AW-104	151Sm	Sludge (Solids)	0.00E+00	Ci	TE	1.2	g/mL	188	kL	0.00E+00	uCi/g	Jan 1 2001 12:00AM
241-AW-104	151Sm	Supernatant	0.00E+00	Ci	TE	1.02	g/mL	347	kL	0.00E+00	uCi/g	Jan 1 2001 12:00AM
241-AW-104	152Eu	Total	1.93E+00	Ci	E							Jan 1 2001 12:00AM
241-AW-104	152Eu	Salt Cake (Liquids)	2.41E-01	Ci	TE	1.6	g/mL	136	kL	1.11E-03	uCi/g	Jan 1 2001 12:00AM
241-AW-104	152Eu	Salt Cake (Solids)	1.62E+00	Ci	TS	1.58	g/mL	457	kL	2.24E-03	uCi/g	Jan 1 2001 12:00AM
241-AW-104	152Eu	Sludge (Liquids)	7.70E-02	Ci	TE	1.6	g/mL	62	kL	7.76E-04	uCi/g	Jan 1 2001 12:00AM
241-AW-104	152Eu	Sludge (Solids)	0.00E+00	Ci	TE	1.2	g/mL	188	kL	0.00E+00	uCi/g	Jan 1 2001 12:00AM
241-AW-104	152Eu	Supernatant	0.00E+00	Ci	TE	1.02	g/mL	347	kL	0.00E+00	uCi/g	Jan 1 2001 12:00AM
241-AW-104	154Eu	Total	2.20E+02	Ci	E							Jan 1 2001 12:00AM
241-AW-104	154Eu	Salt Cake (Liquids)	2.74E+01	Ci	TE	1.6	g/mL	136	kL	1.26E-01	uCi/g	Jan 1 2001 12:00AM
241-AW-104	154Eu	Salt Cake (Solids)	1.84E+02	Ci	TS	1.58	g/mL	457	kL	2.55E-01	uCi/g	Jan 1 2001 12:00AM
241-AW-104	154Eu	Sludge (Liquids)	8.75E+00	Ci	TE	1.6	g/mL	62	kL	8.82E-02	uCi/g	Jan 1 2001 12:00AM
241-AW-104	154Eu	Sludge (Solids)	0.00E+00	Ci	TE	1.2	g/mL	188	kL	0.00E+00	uCi/g	Jan 1 2001 12:00AM
241-AW-104	154Eu	Supernatant	0.00E+00	Ci	TE	1.02	g/mL	347	kL	0.00E+00	uCi/g	Jan 1 2001 12:00AM
241-AW-104	155Eu	Total	6.06E+01	Ci	E							Jan 1 2001 12:00AM
241-AW-104	155Eu	Salt Cake (Liquids)	7.54E+00	Ci	TE	1.6	g/mL	136	kL	3.46E-02	uCi/g	Jan 1 2001 12:00AM
241-AW-104	155Eu	Salt Cake (Solids)	5.07E+01	Ci	TS	1.58	g/mL	457	kL	7.02E-02	uCi/g	Jan 1 2001 12:00AM
241-AW-104	155Eu	Sludge (Liquids)	2.41E+00	Ci	TE	1.6	g/mL	62	kL	2.43E-02	uCi/g	Jan 1 2001 12:00AM
241-AW-104	155Eu	Sludge (Solids)	0.00E+00	Ci	TE	1.2	g/mL	188	kL	0.00E+00	uCi/g	Jan 1 2001 12:00AM
241-AW-104	155Eu	Supernatant	0.00E+00	Ci	TE	1.02	g/mL	347	kL	0.00E+00	uCi/g	Jan 1 2001 12:00AM
241-AW-104	226Ra	Total	7.72E-05	Ci	E							Jan 1 2001 12:00AM
241-AW-104	226Ra	Salt Cake (Liquids)	9.61E-06	Ci	TE	1.6	g/mL	136	kL	4.42E-08	uCi/g	Jan 1 2001 12:00AM
241-AW-104	226Ra	Salt Cake (Solids)	6.45E-05	Ci	TS	1.58	g/mL	457	kL	8.94E-08	uCi/g	Jan 1 2001 12:00AM
241-AW-104	226Ra	Sludge (Liquids)	3.07E-06	Ci	TE	1.6	g/mL	62	kL	3.10E-08	uCi/g	Jan 1 2001 12:00AM
241-AW-104	226Ra	Sludge (Solids)	0.00E+00	Ci	TE	1.2	g/mL	188	kL	0.00E+00	uCi/g	Jan 1 2001 12:00AM
241-AW-104	226Ra	Supernatant	0.00E+00	Ci	TE	1.02	g/mL	347	kL	0.00E+00	uCi/g	Jan 1 2001 12:00AM
241-AW-104	227Ac	Total	7.87E-04	Ci	E							Jan 1 2001 12:00AM
241-AW-104	227Ac	Salt Cake (Liquids)	9.81E-05	Ci	TE	1.6	g/mL	136	kL	4.51E-07	uCi/g	Jan 1 2001 12:00AM
241-AW-104	227Ac	Salt Cake (Solids)	6.58E-04	Ci	TS	1.58	g/mL	457	kL	9.11E-07	uCi/g	Jan 1 2001 12:00AM
241-AW-104	227Ac	Sludge (Liquids)	3.14E-05	Ci	TE	1.6	g/mL	62	kL	3.16E-07	uCi/g	Jan 1 2001 12:00AM
241-AW-104	227Ac	Sludge (Solids)	0.00E+00	Ci	TE	1.2	g/mL	188	kL	0.00E+00	uCi/g	Jan 1 2001 12:00AM
241-AW-104	227Ac	Supernatant	0.00E+00	Ci	TE	1.02	g/mL	347	kL	0.00E+00	uCi/g	Jan 1 2001 12:00AM
241-AW-104	228Ra	Total	9.30E-02	Ci	E							Jan 1 2001 12:00AM
241-AW-104	228Ra	Salt Cake (Liquids)	1.16E-02	Ci	TE	1.6	g/mL	136	kL	5.32E-05	uCi/g	Jan 1 2001 12:00AM
241-AW-104	228Ra	Salt Cake (Solids)	7.77E-02	Ci	TS	1.58	g/mL	457	kL	1.08E-04	uCi/g	Jan 1 2001 12:00AM
241-AW-104	228Ra	Sludge (Liquids)	3.70E-03	Ci	TE	1.6	g/mL	62	kL	3.73E-05	uCi/g	Jan 1 2001 12:00AM
241-AW-104	228Ra	Sludge (Solids)	0.00E+00	Ci	TE	1.2	g/mL	188	kL	0.00E+00	uCi/g	Jan 1 2001 12:00AM
241-AW-104	228Ra	Supernatant	0.00E+00	Ci	TE	1.02	g/mL	347	kL	0.00E+00	uCi/g	Jan 1 2001 12:00AM
241-AW-104	229Th	Total	3.94E-03	Ci	E							Jan 1 2001 12:00AM
241-AW-104	229Th	Salt Cake (Liquids)	4.91E-04	Ci	TE	1.6	g/mL	136	kL	2.26E-06	uCi/g	Jan 1 2001 12:00AM
241-AW-104	229Th	Salt Cake (Solids)	3.29E-03	Ci	TS	1.58	g/mL	457	kL	4.56E-06	uCi/g	Jan 1 2001 12:00AM
241-AW-104	229Th	Sludge (Liquids)	1.57E-04	Ci	TE	1.6	g/mL	62	kL	1.58E-06	uCi/g	Jan 1 2001 12:00AM
241-AW-104	229Th	Sludge (Solids)	0.00E+00	Ci	TE	1.2	g/mL	188	kL	0.00E+00	uCi/g	Jan 1 2001 12:00AM
241-AW-104	229Th	Supernatant	0.00E+00	Ci	TE	1.02	g/mL	347	kL	0.00E+00	uCi/g	Jan 1 2001 12:00AM
241-AW-104	231Pa	Total	2.12E-03	Ci	E							Jan 1 2001 12:00AM

CALCULATION SHEET

PROJECT: RPP-WTP
JOB NO.: 24590
CALC NO.: 24590-WTP-M4C-FRP-00001
SHEET REV: 0A
SHEET NO.: 119

BY: E. Berrios
DATE: 12/04/02

SUBJECT: Updated Emissions Run Feed Vector

Tank Name	Analyte	Waste Phase	Inventory	Inventory Units	Basis	Density	Density Units	Volume	Volume Units	Concentration	Concentration Units	Decay Date
241-AW-104	231Pa	Salt Cake (Liquids)	2.65E-04	Ci	TE	1.6	g/mL	136	kL	1.22E-06	uCi/g	Jan 1 2001 12:00AM
241-AW-104	231Pa	Salt Cake (Solids)	1.77E-03	Ci	TS	1.58	g/mL	457	kL	2.46E-06	uCi/g	Jan 1 2001 12:00AM
241-AW-104	231Pa	Sludge (Liquids)	8.46E-05	Ci	TE	1.6	g/mL	62	kL	8.53E-07	uCi/g	Jan 1 2001 12:00AM
241-AW-104	231Pa	Sludge (Solids)	0.00E+00	Ci	TE	1.2	g/mL	188	kL	0.00E+00	uCi/g	Jan 1 2001 12:00AM
241-AW-104	231Pa	Supernatant	0.00E+00	Ci	TE	1.02	g/mL	347	kL	0.00E+00	uCi/g	Jan 1 2001 12:00AM
241-AW-104	232Th	Total	2.07E-02	Ci	E							Jan 1 2001 12:00AM
241-AW-104	232Th	Salt Cake (Liquids)	2.58E-03	Ci	TE	1.6	g/mL	136	kL	1.18E-05	uCi/g	Jan 1 2001 12:00AM
241-AW-104	232Th	Salt Cake (Solids)	1.73E-02	Ci	TS	1.58	g/mL	457	kL	2.40E-05	uCi/g	Jan 1 2001 12:00AM
241-AW-104	232Th	Sludge (Liquids)	8.24E-04	Ci	TE	1.6	g/mL	62	kL	8.30E-06	uCi/g	Jan 1 2001 12:00AM
241-AW-104	232Th	Sludge (Solids)	0.00E+00	Ci	TE	1.2	g/mL	188	kL	0.00E+00	uCi/g	Jan 1 2001 12:00AM
241-AW-104	232Th	Supernatant	0.00E+00	Ci	TE	1.02	g/mL	347	kL	0.00E+00	uCi/g	Jan 1 2001 12:00AM
241-AW-104	232U	Total	4.26E-03	Ci	E/C							Jan 1 2001 12:00AM
241-AW-104	232U	Salt Cake (Liquids)	1.59E-03	Ci	TE	1.6	g/mL	136	kL	7.32E-06	uCi/g	Jan 1 2001 12:00AM
241-AW-104	232U	Salt Cake (Solids)	6.47E-05	Ci	C		g/mL	457	kL	8.85E-08	uCi/g	Jan 1 2001 12:00AM
241-AW-104	232U	Sludge (Liquids)	5.09E-04	Ci	TE	1.6	g/mL	62	kL	5.14E-06	uCi/g	Jan 1 2001 12:00AM
241-AW-104	232U	Sludge (Solids)	2.09E-03	Ci	C		g/mL	188	kL	8.70E-06	uCi/g	Jan 1 2001 12:00AM
241-AW-104	232U	Supernatant	5.63E-07	Ci	C		g/mL	347	kL	1.42E-09	uCi/g	Jan 1 2001 12:00AM
241-AW-104	233U	Total	1.46E-02	Ci	E/C							Jan 1 2001 12:00AM
241-AW-104	233U	Salt Cake (Liquids)	6.54E-03	Ci	TE	1.6	g/mL	136	kL	3.01E-05	uCi/g	Jan 1 2001 12:00AM
241-AW-104	233U	Salt Cake (Solids)	1.77E-04	Ci	C		g/mL	457	kL	2.43E-07	uCi/g	Jan 1 2001 12:00AM
241-AW-104	233U	Sludge (Liquids)	2.09E-03	Ci	TE	1.6	g/mL	62	kL	2.11E-05	uCi/g	Jan 1 2001 12:00AM
241-AW-104	233U	Sludge (Solids)	5.74E-03	Ci	C		g/mL	188	kL	2.39E-05	uCi/g	Jan 1 2001 12:00AM
241-AW-104	233U	Supernatant	1.54E-06	Ci	C		g/mL	347	kL	3.90E-09	uCi/g	Jan 1 2001 12:00AM
241-AW-104	234U	Total	3.46E+00	Ci	E/C							Jan 1 2001 12:00AM
241-AW-104	234U	Salt Cake (Liquids)	2.23E-03	Ci	TE	1.6	g/mL	136	kL	1.02E-05	uCi/g	Jan 1 2001 12:00AM
241-AW-104	234U	Salt Cake (Solids)	1.04E-01	Ci	C		g/mL	457	kL	1.42E-04	uCi/g	Jan 1 2001 12:00AM
241-AW-104	234U	Sludge (Liquids)	7.12E-04	Ci	TE	1.6	g/mL	62	kL	7.17E-06	uCi/g	Jan 1 2001 12:00AM
241-AW-104	234U	Sludge (Solids)	3.35E+00	Ci	C		g/mL	188	kL	1.39E-02	uCi/g	Jan 1 2001 12:00AM
241-AW-104	234U	Supernatant	9.01E-04	Ci	C		g/mL	347	kL	2.28E-06	uCi/g	Jan 1 2001 12:00AM
241-AW-104	235U	Total	1.31E-01	Ci	E/C							Jan 1 2001 12:00AM
241-AW-104	235U	Salt Cake (Liquids)	9.14E-05	Ci	TE	1.6	g/mL	136	kL	4.20E-07	uCi/g	Jan 1 2001 12:00AM
241-AW-104	235U	Sludge (Liquids)	2.92E-05	Ci	TE	1.6	g/mL	62	kL	2.95E-07	uCi/g	Jan 1 2001 12:00AM
241-AW-104	235U	Sludge (Solids)	1.27E-01	Ci	C		g/mL	188	kL	5.29E-04	uCi/g	Jan 1 2001 12:00AM
241-AW-104	235U	Supernatant	3.42E-05	Ci	C		g/mL	347	kL	8.65E-08	uCi/g	Jan 1 2001 12:00AM
241-AW-104	235U	Salt Cake (Solids)	3.94E-03	Ci	C		g/mL	457	kL	5.38E-06	uCi/g	Jan 1 2001 12:00AM
241-AW-104	236U	Total	2.84E-01	Ci	E/C							Jan 1 2001 12:00AM
241-AW-104	236U	Salt Cake (Liquids)	7.78E-05	Ci	TE	1.6	g/mL	136	kL	3.57E-07	uCi/g	Jan 1 2001 12:00AM
241-AW-104	236U	Salt Cake (Solids)	8.52E-03	Ci	C		g/mL	457	kL	1.17E-05	uCi/g	Jan 1 2001 12:00AM
241-AW-104	236U	Sludge (Liquids)	2.49E-05	Ci	TE	1.6	g/mL	62	kL	2.51E-07	uCi/g	Jan 1 2001 12:00AM
241-AW-104	236U	Sludge (Solids)	2.76E-01	Ci	C		g/mL	188	kL	1.15E-03	uCi/g	Jan 1 2001 12:00AM
241-AW-104	236U	Supernatant	7.41E-05	Ci	C		g/mL	347	kL	1.87E-07	uCi/g	Jan 1 2001 12:00AM
241-AW-104	237Np	Total	3.61E-01	Ci	E							Jan 1 2001 12:00AM
241-AW-104	237Np	Salt Cake (Liquids)	1.65E-01	Ci	TE	1.6	g/mL	136	kL	7.60E-04	uCi/g	Jan 1 2001 12:00AM
241-AW-104	237Np	Salt Cake (Solids)	1.43E-01	Ci	TS	1.58	g/mL	457	kL	1.97E-04	uCi/g	Jan 1 2001 12:00AM
241-AW-104	237Np	Sludge (Liquids)	5.29E-02	Ci	TE	1.6	g/mL	62	kL	5.33E-04	uCi/g	Jan 1 2001 12:00AM
241-AW-104	237Np	Sludge (Solids)	0.00E+00	Ci	TE	1.2	g/mL	188	kL	0.00E+00	uCi/g	Jan 1 2001 12:00AM
241-AW-104	237Np	Supernatant	0.00E+00	Ci	TE	1.02	g/mL	347	kL	0.00E+00	uCi/g	Jan 1 2001 12:00AM

CALCULATION SHEET

PROJECT: RPP-WTP
JOB NO.: 24590
CALC NO.: 24590-WTP-M4C-FRP-00001
SHEET REV: 0A
SHEET NO.: 120

BY: E. Berrios
DATE: 12/04/02

SUBJECT: Updated Emissions Run Feed Vector

Tank Name	Analyte	Waste Phase	Inventory	Inventory Units	Basis	Density	Density Units	Volume	Volume Units	Concentration	Concentration Units	Decay Date
241-AW-104	238Pu	Total	5.78E+01	Ci	C							Jan 1 2001 12:00AM
241-AW-104	238Pu	Salt Cake (Liquids)	1.15E-01	Ci	C		g/mL	136	kL	5.87E-04	uCi/g	Jan 1 2001 12:00AM
241-AW-104	238Pu	Salt Cake (Solids)	6.23E+00	Ci	C		g/mL	457	kL	8.52E-03	uCi/g	Jan 1 2001 12:00AM
241-AW-104	238Pu	Sludge (Liquids)	3.43E-02	Ci	C		g/mL	62	kL	3.87E-04	uCi/g	Jan 1 2001 12:00AM
241-AW-104	238Pu	Sludge (Solids)	5.14E+01	Ci	C		g/mL	188	kL	2.13E-01	uCi/g	Jan 1 2001 12:00AM
241-AW-104	238Pu	Supernatant	6.40E-03	Ci	C		g/mL	347	kL	1.62E-05	uCi/g	Jan 1 2001 12:00AM
241-AW-104	238U	Total	2.37E+00	Ci	E/C							Jan 1 2001 12:00AM
241-AW-104	238U	Salt Cake (Liquids)	2.00E-03	Ci	TE	1.6	g/mL	136	kL	9.21E-06	uCi/g	Jan 1 2001 12:00AM
241-AW-104	238U	Salt Cake (Solids)	7.11E-02	Ci	C		g/mL	457	kL	9.73E-05	uCi/g	Jan 1 2001 12:00AM
241-AW-104	238U	Sludge (Liquids)	6.41E-04	Ci	TE	1.6	g/mL	62	kL	6.46E-06	uCi/g	Jan 1 2001 12:00AM
241-AW-104	238U	Sludge (Solids)	2.30E+00	Ci	C		g/mL	188	kL	9.56E-03	uCi/g	Jan 1 2001 12:00AM
241-AW-104	238U	Supernatant	6.18E-04	Ci	C		g/mL	347	kL	1.56E-06	uCi/g	Jan 1 2001 12:00AM
241-AW-104	239/240Pu	Total	7.15E-02	Ci	S							Jan 1 2001 12:00AM
241-AW-104	239/240Pu	Supernatant	7.15E-02	Ci	S	1.14	g/mL	347	kL	1.81E-04	uCi/g	Jan 1 2001 12:00AM
241-AW-104	239Pu	Total	4.94E+02	Ci	C							Jan 1 2001 12:00AM
241-AW-104	239Pu	Salt Cake (Liquids)	9.85E-01	Ci	C		g/mL	136	kL	5.03E-03	uCi/g	Jan 1 2001 12:00AM
241-AW-104	239Pu	Salt Cake (Solids)	5.33E+01	Ci	C		g/mL	457	kL	7.29E-02	uCi/g	Jan 1 2001 12:00AM
241-AW-104	239Pu	Sludge (Liquids)	2.94E-01	Ci	C		g/mL	62	kL	3.32E-03	uCi/g	Jan 1 2001 12:00AM
241-AW-104	239Pu	Sludge (Solids)	4.40E+02	Ci	C		g/mL	188	kL	1.83E+00	uCi/g	Jan 1 2001 12:00AM
241-AW-104	239Pu	Supernatant	5.48E-02	Ci	C		g/mL	347	kL	1.39E-04	uCi/g	Jan 1 2001 12:00AM
241-AW-104	240Pu	Total	1.50E+02	Ci	C							Jan 1 2001 12:00AM
241-AW-104	240Pu	Salt Cake (Liquids)	2.99E-01	Ci	C		g/mL	136	kL	1.53E-03	uCi/g	Jan 1 2001 12:00AM
241-AW-104	240Pu	Salt Cake (Solids)	1.62E+01	Ci	C		g/mL	457	kL	2.21E-02	uCi/g	Jan 1 2001 12:00AM
241-AW-104	240Pu	Sludge (Liquids)	8.93E-02	Ci	C		g/mL	62	kL	1.01E-03	uCi/g	Jan 1 2001 12:00AM
241-AW-104	240Pu	Sludge (Solids)	1.34E+02	Ci	C		g/mL	188	kL	5.55E-01	uCi/g	Jan 1 2001 12:00AM
241-AW-104	240Pu	Supernatant	1.66E-02	Ci	C		g/mL	347	kL	4.21E-05	uCi/g	Jan 1 2001 12:00AM
241-AW-104	241Am	Total	5.94E+01	Ci	S/C							Jan 1 2001 12:00AM
241-AW-104	241Am	Salt Cake (Liquids)	1.18E-01	Ci	C		g/mL	136	kL	6.03E-04	uCi/g	Jan 1 2001 12:00AM
241-AW-104	241Am	Salt Cake (Solids)	6.40E+00	Ci	C		g/mL	457	kL	8.75E-03	uCi/g	Jan 1 2001 12:00AM
241-AW-104	241Am	Sludge (Liquids)	3.53E-02	Ci	C		g/mL	62	kL	3.98E-04	uCi/g	Jan 1 2001 12:00AM
241-AW-104	241Am	Sludge (Solids)	5.28E+01	Ci	C		g/mL	188	kL	2.19E-01	uCi/g	Jan 1 2001 12:00AM
241-AW-104	241Am	Supernatant	1.05E-01	Ci	S	1.14	g/mL	347	kL	2.64E-04	uCi/g	Jan 1 2001 12:00AM
241-AW-104	241Pu	Total	4.45E+03	Ci	C							Jan 1 2001 12:00AM
241-AW-104	241Pu	Salt Cake (Liquids)	8.86E+00	Ci	C		g/mL	136	kL	4.53E-02	uCi/g	Jan 1 2001 12:00AM
241-AW-104	241Pu	Salt Cake (Solids)	4.80E+02	Ci	C		g/mL	457	kL	6.57E-01	uCi/g	Jan 1 2001 12:00AM
241-AW-104	241Pu	Sludge (Liquids)	2.65E+00	Ci	C		g/mL	62	kL	2.99E-02	uCi/g	Jan 1 2001 12:00AM
241-AW-104	241Pu	Sludge (Solids)	3.96E+03	Ci	C		g/mL	188	kL	1.65E+01	uCi/g	Jan 1 2001 12:00AM
241-AW-104	241Pu	Supernatant	4.94E-01	Ci	C		g/mL	347	kL	1.25E-03	uCi/g	Jan 1 2001 12:00AM
241-AW-104	242Cm	Total	1.11E-03	Ci	C							Jan 1 2001 12:00AM
241-AW-104	242Cm	Salt Cake (Liquids)	2.20E-06	Ci	C		g/mL	136	kL	1.13E-08	uCi/g	Jan 1 2001 12:00AM
241-AW-104	242Cm	Salt Cake (Solids)	1.19E-04	Ci	C		g/mL	457	kL	1.63E-07	uCi/g	Jan 1 2001 12:00AM
241-AW-104	242Cm	Sludge (Liquids)	6.58E-07	Ci	C		g/mL	62	kL	7.42E-09	uCi/g	Jan 1 2001 12:00AM
241-AW-104	242Cm	Sludge (Solids)	9.84E-04	Ci	C		g/mL	188	kL	4.09E-06	uCi/g	Jan 1 2001 12:00AM
241-AW-104	242Cm	Supernatant	2.34E-06	Ci	C		g/mL	347	kL	5.92E-09	uCi/g	Jan 1 2001 12:00AM
241-AW-104	242Pu	Total	2.32E-02	Ci	C							Jan 1 2001 12:00AM
241-AW-104	242Pu	Salt Cake (Liquids)	4.63E-05	Ci	C		g/mL	136	kL	2.36E-07	uCi/g	Jan 1 2001 12:00AM
241-AW-104	242Pu	Salt Cake (Solids)	2.51E-03	Ci	C		g/mL	457	kL	3.43E-06	uCi/g	Jan 1 2001 12:00AM

CALCULATION SHEET

PROJECT: RPP-WTP
JOB NO.: 24590
CALC NO.: 24590-WTP-M4C-FRP-00001
SHEET REV: 0A
SHEET NO.: 121

BY: E. Berrios
DATE: 12/04/02

SUBJECT: Updated Emissions Run Feed Vector

Tank Name	Analyte	Waste Phase	Inventory	Inventory Units	Basis	Density	Density Units	Volume	Volume Units	Concentration	Concentration Units	Decay Date
241-AW-104	242Pu	Sludge (Liquids)	1.38E-05	Ci	C		g/mL	62	kL	1.56E-07	uCi/g	Jan 1 2001 12:00AM
241-AW-104	242Pu	Sludge (Solids)	2.07E-02	Ci	C		g/mL	188	kL	8.59E-05	uCi/g	Jan 1 2001 12:00AM
241-AW-104	242Pu	Supernatant	2.58E-06	Ci	C		g/mL	347	kL	6.52E-09	uCi/g	Jan 1 2001 12:00AM
241-AW-104	243Am	Total	4.22E-05	Ci	C							Jan 1 2001 12:00AM
241-AW-104	243Am	Salt Cake (Liquids)	8.39E-08	Ci	C		g/mL	136	kL	4.29E-10	uCi/g	Jan 1 2001 12:00AM
241-AW-104	243Am	Salt Cake (Solids)	4.55E-06	Ci	C		g/mL	457	kL	6.22E-09	uCi/g	Jan 1 2001 12:00AM
241-AW-104	243Am	Sludge (Liquids)	2.51E-08	Ci	C		g/mL	62	kL	2.83E-10	uCi/g	Jan 1 2001 12:00AM
241-AW-104	243Am	Sludge (Solids)	3.75E-05	Ci	C		g/mL	188	kL	1.56E-07	uCi/g	Jan 1 2001 12:00AM
241-AW-104	243Am	Supernatant	8.93E-08	Ci	C		g/mL	347	kL	2.26E-10	uCi/g	Jan 1 2001 12:00AM
241-AW-104	243Cm	Total	1.52E-04	Ci	C							Jan 1 2001 12:00AM
241-AW-104	243Cm	Salt Cake (Liquids)	3.03E-07	Ci	C		g/mL	136	kL	1.55E-09	uCi/g	Jan 1 2001 12:00AM
241-AW-104	243Cm	Salt Cake (Solids)	1.64E-05	Ci	C		g/mL	457	kL	2.24E-08	uCi/g	Jan 1 2001 12:00AM
241-AW-104	243Cm	Sludge (Liquids)	9.05E-08	Ci	C		g/mL	62	kL	1.02E-09	uCi/g	Jan 1 2001 12:00AM
241-AW-104	243Cm	Sludge (Solids)	1.35E-04	Ci	C		g/mL	188	kL	5.62E-07	uCi/g	Jan 1 2001 12:00AM
241-AW-104	243Cm	Supernatant	3.22E-07	Ci	C		g/mL	347	kL	8.15E-10	uCi/g	Jan 1 2001 12:00AM
241-AW-104	244Cm	Total	6.63E-04	Ci	C							Jan 1 2001 12:00AM
241-AW-104	244Cm	Salt Cake (Liquids)	1.32E-06	Ci	C		g/mL	136	kL	6.73E-09	uCi/g	Jan 1 2001 12:00AM
241-AW-104	244Cm	Salt Cake (Solids)	7.14E-05	Ci	C		g/mL	457	kL	9.76E-08	uCi/g	Jan 1 2001 12:00AM
241-AW-104	244Cm	Sludge (Liquids)	3.94E-07	Ci	C		g/mL	62	kL	4.44E-09	uCi/g	Jan 1 2001 12:00AM
241-AW-104	244Cm	Sludge (Solids)	5.89E-04	Ci	C		g/mL	188	kL	2.45E-06	uCi/g	Jan 1 2001 12:00AM
241-AW-104	244Cm	Supernatant	1.40E-06	Ci	C		g/mL	347	kL	3.54E-09	uCi/g	Jan 1 2001 12:00AM
241-AW-104	3H	Total	5.33E+01	Ci	E							Jan 1 2001 12:00AM
241-AW-104	3H	Salt Cake (Liquids)	2.44E+01	Ci	TE		1.6 g/mL	136	kL	1.12E-01	uCi/g	Jan 1 2001 12:00AM
241-AW-104	3H	Salt Cake (Solids)	2.11E+01	Ci	TS		1.58 g/mL	457	kL	2.92E-02	uCi/g	Jan 1 2001 12:00AM
241-AW-104	3H	Sludge (Liquids)	7.81E+00	Ci	TE		1.6 g/mL	62	kL	7.87E-02	uCi/g	Jan 1 2001 12:00AM
241-AW-104	3H	Sludge (Solids)	0.00E+00	Ci	TE		1.2 g/mL	188	kL	0.00E+00	uCi/g	Jan 1 2001 12:00AM
241-AW-104	3H	Supernatant	0.00E+00	Ci	TE		1.02 g/mL	347	kL	0.00E+00	uCi/g	Jan 1 2001 12:00AM
241-AW-104	59Ni	Salt Cake (Liquids)	5.18E-02	Ci	TE		1.6 g/mL	136	kL	2.38E-04	uCi/g	Jan 1 2001 12:00AM
241-AW-104	59Ni	Salt Cake (Solids)	1.05E+00	Ci	TS		1.58 g/mL	457	kL	1.45E-03	uCi/g	Jan 1 2001 12:00AM
241-AW-104	59Ni	Sludge (Liquids)	1.66E-02	Ci	TE		1.6 g/mL	62	kL	1.67E-04	uCi/g	Jan 1 2001 12:00AM
241-AW-104	59Ni	Sludge (Solids)	0.00E+00	Ci	TE		1.2 g/mL	188	kL	0.00E+00	uCi/g	Jan 1 2001 12:00AM
241-AW-104	59Ni	Supernatant	0.00E+00	Ci	TE		1.02 g/mL	347	kL	0.00E+00	uCi/g	Jan 1 2001 12:00AM
241-AW-104	59Ni	Total	1.12E+00	Ci	E							Jan 1 2001 12:00AM
241-AW-104	60Co	Total	1.56E+01	Ci	S/E							Jan 1 2001 12:00AM
241-AW-104	60Co	Salt Cake (Liquids)	1.26E+00	Ci	TE		1.6 g/mL	136	kL	5.80E-03	uCi/g	Jan 1 2001 12:00AM
241-AW-104	60Co	Salt Cake (Solids)	1.15E+01	Ci	TS		1.58 g/mL	457	kL	1.59E-02	uCi/g	Jan 1 2001 12:00AM
241-AW-104	60Co	Sludge (Liquids)	4.03E-01	Ci	TE		1.6 g/mL	62	kL	4.07E-03	uCi/g	Jan 1 2001 12:00AM
241-AW-104	60Co	Sludge (Solids)	0.00E+00	Ci	TE		1.2 g/mL	188	kL	0.00E+00	uCi/g	Jan 1 2001 12:00AM
241-AW-104	60Co	Supernatant	2.42E+00	Ci	S		1.14 g/mL	347	kL	6.12E-03	uCi/g	Jan 1 2001 12:00AM
241-AW-104	63Ni	Total	1.06E+02	Ci	E							Jan 1 2001 12:00AM
241-AW-104	63Ni	Salt Cake (Liquids)	4.89E+00	Ci	TE		1.6 g/mL	136	kL	2.25E-02	uCi/g	Jan 1 2001 12:00AM
241-AW-104	63Ni	Salt Cake (Solids)	9.96E+01	Ci	TS		1.58 g/mL	457	kL	1.38E-01	uCi/g	Jan 1 2001 12:00AM
241-AW-104	63Ni	Sludge (Liquids)	1.56E+00	Ci	TE		1.6 g/mL	62	kL	1.58E-02	uCi/g	Jan 1 2001 12:00AM
241-AW-104	63Ni	Sludge (Solids)	0.00E+00	Ci	TE		1.2 g/mL	188	kL	0.00E+00	uCi/g	Jan 1 2001 12:00AM
241-AW-104	63Ni	Supernatant	0.00E+00	Ci	TE		1.02 g/mL	347	kL	0.00E+00	uCi/g	Jan 1 2001 12:00AM
241-AW-104	79Se	Total	1.92E-01	Ci	E							Jan 1 2001 12:00AM
241-AW-104	79Se	Salt Cake (Liquids)	2.40E-02	Ci	TE		1.6 g/mL	136	kL	1.10E-04	uCi/g	Jan 1 2001 12:00AM

CALCULATION SHEET

PROJECT: RPP-WTP
JOB NO.: 24590
CALC NO.: 24590-WTP-M4C-FRP-00001
SHEET REV: 0A
SHEET NO.: 122

BY: E. Barrios
DATE: 12/04/02

SUBJECT: Updated Emissions Run Feed Vector

Tank Name	Analyte	Waste Phase	Inventory	Inventory Units	Basis	Density	Density Units	Volume	Volume Units	Concentration	Concentration Units	Decay Date
241-AW-104	79Se	Salt Cake (Solids)	1.61E-01	Ci	TS	1.58	g/mL	457	kL	2.22E-04	uCi/g	Jan 1 2001 12:00AM
241-AW-104	79Se	Sludge (Liquids)	7.66E-03	Ci	TE	1.6	g/mL	62	kL	7.72E-05	uCi/g	Jan 1 2001 12:00AM
241-AW-104	79Se	Sludge (Solids)	0.00E+00	Ci	TE	1.2	g/mL	188	kL	0.00E+00	uCi/g	Jan 1 2001 12:00AM
241-AW-104	79Se	Supernatant	0.00E+00	Ci	TE	1.02	g/mL	347	kL	0.00E+00	uCi/g	Jan 1 2001 12:00AM
241-AW-104	90Sr	Total	5.11E+03	Ci	S/E							Jan 1 2001 12:00AM
241-AW-104	90Sr	Salt Cake (Liquids)	3.41E+03	Ci	TE	1.6	g/mL	136	kL	1.57E+01	uCi/g	Jan 1 2001 12:00AM
241-AW-104	90Sr	Salt Cake (Solids)	6.00E+02	Ci	E	1.44	g/mL	457	kL	9.12E-01	uCi/g	Jan 1 2001 12:00AM
241-AW-104	90Sr	Sludge (Liquids)	1.09E+03	Ci	TE	1.6	g/mL	62	kL	1.10E+01	uCi/g	Jan 1 2001 12:00AM
241-AW-104	90Sr	Sludge (Solids)	0.00E+00	Ci	TE	1.2	g/mL	188	kL	0.00E+00	uCi/g	Jan 1 2001 12:00AM
241-AW-104	90Sr	Supernatant	1.19E+01	Ci	S	1.14	g/mL	347	kL	3.01E-02	uCi/g	Jan 1 2001 12:00AM
241-AW-104	90Y	Total	5.11E+03	Ci	C							Jan 1 2001 12:00AM
241-AW-104	90Y	Salt Cake (Liquids)	3.41E+03	Ci	C		g/mL	136	kL	1.57E+01	uCi/g	Jan 1 2001 12:00AM
241-AW-104	90Y	Salt Cake (Solids)	6.00E+02	Ci	C		g/mL	457	kL	9.12E-01	uCi/g	Jan 1 2001 12:00AM
241-AW-104	90Y	Sludge (Liquids)	1.09E+03	Ci	C		g/mL	62	kL	1.10E+01	uCi/g	Jan 1 2001 12:00AM
241-AW-104	90Y	Sludge (Solids)	0.00E+00	Ci	C		g/mL	188	kL	0.00E+00	uCi/g	Jan 1 2001 12:00AM
241-AW-104	90Y	Supernatant	1.19E+01	Ci	C		g/mL	347	kL	3.01E-02	uCi/g	Jan 1 2001 12:00AM
241-AW-104	93mNb	Total	7.62E+00	Ci	E							Jan 1 2001 12:00AM
241-AW-104	93mNb	Salt Cake (Liquids)	9.49E-01	Ci	TE	1.6	g/mL	136	kL	4.36E-03	uCi/g	Jan 1 2001 12:00AM
241-AW-104	93mNb	Salt Cake (Solids)	6.36E+00	Ci	TS	1.58	g/mL	457	kL	8.81E-03	uCi/g	Jan 1 2001 12:00AM
241-AW-104	93mNb	Sludge (Liquids)	3.04E-01	Ci	TE	1.6	g/mL	62	kL	3.06E-03	uCi/g	Jan 1 2001 12:00AM
241-AW-104	93mNb	Sludge (Solids)	0.00E+00	Ci	TE	1.2	g/mL	188	kL	0.00E+00	uCi/g	Jan 1 2001 12:00AM
241-AW-104	93mNb	Supernatant	0.00E+00	Ci	TE	1.02	g/mL	347	kL	0.00E+00	uCi/g	Jan 1 2001 12:00AM
241-AW-104	93Zr	Total	9.49E+00	Ci	E							Jan 1 2001 12:00AM
241-AW-104	93Zr	Salt Cake (Liquids)	1.18E+00	Ci	TE	1.6	g/mL	136	kL	5.44E-03	uCi/g	Jan 1 2001 12:00AM
241-AW-104	93Zr	Salt Cake (Solids)	7.93E+00	Ci	TS	1.58	g/mL	457	kL	1.10E-02	uCi/g	Jan 1 2001 12:00AM
241-AW-104	93Zr	Sludge (Liquids)	3.78E-01	Ci	TE	1.6	g/mL	62	kL	3.81E-03	uCi/g	Jan 1 2001 12:00AM
241-AW-104	93Zr	Sludge (Solids)	0.00E+00	Ci	TE	1.2	g/mL	188	kL	0.00E+00	uCi/g	Jan 1 2001 12:00AM
241-AW-104	93Zr	Supernatant	0.00E+00	Ci	TE	1.02	g/mL	347	kL	0.00E+00	uCi/g	Jan 1 2001 12:00AM
241-AW-104	99Tc	Salt Cake (Solids)	1.39E+02	Ci	E	1.44	g/mL	457	kL	2.11E-01	uCi/g	Jan 1 2001 12:00AM
241-AW-104	99Tc	Sludge (Liquids)	1.49E+01	Ci	TE	1.6	g/mL	62	kL	1.51E-01	uCi/g	Jan 1 2001 12:00AM
241-AW-104	99Tc	Sludge (Solids)	0.00E+00	Ci	TE	1.2	g/mL	188	kL	0.00E+00	uCi/g	Jan 1 2001 12:00AM
241-AW-104	99Tc	Supernatant	0.00E+00	Ci	TE	1.02	g/mL	347	kL	0.00E+00	uCi/g	Jan 1 2001 12:00AM
241-AW-104	99Tc	Total	2.01E+02	Ci	E							Jan 1 2001 12:00AM
241-AW-104	99Tc	Salt Cake (Liquids)	4.67E+01	Ci	TE	1.6	g/mL	136	kL	2.15E-01	uCi/g	Jan 1 2001 12:00AM
241-AW-104	Ag	Salt Cake (Solids)	5.65E+00	kg	S	1.6	g/mL	457	kL	7.73E+00	ug/g	Jan 1 2001 12:00AM
241-AW-104	Ag	Sludge (Liquids)	7.19E-01	kg	S	1.43	g/mL	62	kL	8.11E+00	ug/g	Jan 1 2001 12:00AM
241-AW-104	Ag	Total	3.18E+01	kg	S							Jan 1 2001 12:00AM
241-AW-104	Ag	Sludge (Solids)	2.42E+01	kg	S	1.4	g/mL	188	kL	9.21E+01	ug/g	Jan 1 2001 12:00AM
241-AW-104	Ag	Salt Cake (Liquids)	8.17E-01	kg	S	1.45	g/mL	136	kL	4.14E+00	ug/g	Jan 1 2001 12:00AM
241-AW-104	Ag	Supernatant	3.50E-01	kg	S	1.08	g/mL	347	kL	9.35E-01	ug/g	Jan 1 2001 12:00AM
241-AW-104	Al	Total	2.28E+04	kg	S							Jan 1 2001 12:00AM
241-AW-104	Al	Salt Cake (Liquids)	4.04E+03	kg	S	1.44	g/mL	136	kL	2.06E+04	ug/g	Jan 1 2001 12:00AM
241-AW-104	Al	Salt Cake (Solids)	1.46E+04	kg	S	1.6	g/mL	457	kL	2.00E+04	ug/g	Jan 1 2001 12:00AM
241-AW-104	Al	Sludge (Liquids)	1.02E+03	kg	S	1.43	g/mL	62	kL	1.15E+04	ug/g	Jan 1 2001 12:00AM
241-AW-104	Al	Sludge (Solids)	2.57E+03	kg	S	1.28	g/mL	188	kL	1.07E+04	ug/g	Jan 1 2001 12:00AM
241-AW-104	Al	Supernatant	5.73E+02	kg	S	1.08	g/mL	347	kL	1.53E+03	ug/g	Jan 1 2001 12:00AM
241-AW-104	As	Salt Cake (Liquids)	8.17E+00	kg	S	1.45	g/mL	136	kL	4.14E+01	ug/g	Jan 1 2001 12:00AM

CALCULATION SHEET

PROJECT: RPP-WTP
JOB NO: 24590
CALC NO.: 24590-WTP-M4C-FRP-00001
SHEET REV: 0A
SHEET NO.: 123

BY: E. Barrios
DATE: 12/04/02

SUBJECT: Updated Emissions Run Feed Vector

Tank Name	Analyte	Waste Phase	Inventory	Inventory Units	Basis	Density	Density Units	Volume	Volume Units	Concentration	Concentration Units	Decay Date
241-AW-104	As	Supernatant	3.50E+00	kg	S	1.08	g/mL	347	kL	9.35E+00	ug/g	Jan 1 2001 12:00AM
241-AW-104	As	Salt Cake (Solids)	3.90E+01	kg	S	1.6	g/mL	457	kL	5.33E+01	ug/g	Jan 1 2001 12:00AM
241-AW-104	As	Total	6.57E+01	kg	S/E							Jan 1 2001 12:00AM
241-AW-104	As	Sludge (Liquids)	3.73E+00	kg	S	1.33	g/mL	62	kL	4.52E+01	ug/g	Jan 1 2001 12:00AM
241-AW-104	As	Sludge (Solids)	1.13E+01	kg	S	1.4	g/mL	188	kL	4.30E+01	ug/g	Jan 1 2001 12:00AM
241-AW-104	B	Sludge (Solids)	6.01E+00	kg	S	1.4	g/mL	188	kL	2.29E+01	ug/g	Jan 1 2001 12:00AM
241-AW-104	B	Sludge (Liquids)	2.05E+00	kg	S	1.43	g/mL	62	kL	2.31E+01	ug/g	Jan 1 2001 12:00AM
241-AW-104	B	Supernatant	2.22E+00	kg	S	1.08	g/mL	347	kL	5.92E+00	ug/g	Jan 1 2001 12:00AM
241-AW-104	B	Salt Cake (Liquids)	6.34E+00	kg	S	1.44	g/mL	136	kL	3.24E+01	ug/g	Jan 1 2001 12:00AM
241-AW-104	B	Salt Cake (Solids)	2.22E+01	kg	S	1.6	g/mL	457	kL	3.04E+01	ug/g	Jan 1 2001 12:00AM
241-AW-104	B	Total	3.88E+01	kg	S							Jan 1 2001 12:00AM
241-AW-104	Ba	Salt Cake (Solids)	1.95E+01	kg	S	1.6	g/mL	457	kL	2.67E+01	ug/g	Jan 1 2001 12:00AM
241-AW-104	Ba	Sludge (Liquids)	1.87E+00	kg	S	1.33	g/mL	62	kL	2.26E+01	ug/g	Jan 1 2001 12:00AM
241-AW-104	Ba	Total	3.36E+01	kg	S/E							Jan 1 2001 12:00AM
241-AW-104	Ba	Salt Cake (Liquids)	4.09E+00	kg	S	1.45	g/mL	136	kL	2.08E+01	ug/g	Jan 1 2001 12:00AM
241-AW-104	Ba	Sludge (Solids)	6.40E+00	kg	S	1.4	g/mL	188	kL	2.43E+01	ug/g	Jan 1 2001 12:00AM
241-AW-104	Ba	Supernatant	1.75E+00	kg	S	1.08	g/mL	347	kL	4.68E+00	ug/g	Jan 1 2001 12:00AM
241-AW-104	Be	Sludge (Solids)	9.25E-01	kg	S	1.4	g/mL	188	kL	3.52E+00	ug/g	Jan 1 2001 12:00AM
241-AW-104	Be	Salt Cake (Solids)	1.95E+00	kg	S	1.6	g/mL	457	kL	2.67E+00	ug/g	Jan 1 2001 12:00AM
241-AW-104	Be	Total	3.65E+00	kg	S/E							Jan 1 2001 12:00AM
241-AW-104	Be	Sludge (Liquids)	1.86E-01	kg	S	1.43	g/mL	62	kL	2.10E+00	ug/g	Jan 1 2001 12:00AM
241-AW-104	Be	Salt Cake (Liquids)	4.08E-01	kg	S	1.44	g/mL	136	kL	2.08E+00	ug/g	Jan 1 2001 12:00AM
241-AW-104	Be	Supernatant	1.75E-01	kg	S	1.08	g/mL	347	kL	4.68E-01	ug/g	Jan 1 2001 12:00AM
241-AW-104	Bi	Total	4.56E+01	kg	S/E							Jan 1 2001 12:00AM
241-AW-104	Bi	Salt Cake (Liquids)	5.01E+00	kg	TE	1.6	g/mL	136	kL	2.30E+01	ug/g	Jan 1 2001 12:00AM
241-AW-104	Bi	Salt Cake (Solids)	3.90E+01	kg	S	1.6	g/mL	457	kL	5.33E+01	ug/g	Jan 1 2001 12:00AM
241-AW-104	Bi	Sludge (Liquids)	1.60E+00	kg	TE	1.6	g/mL	62	kL	1.62E+01	ug/g	Jan 1 2001 12:00AM
241-AW-104	Bi	Sludge (Solids)	0.00E+00	kg	TE	1.2	g/mL	188	kL	0.00E+00	ug/g	Jan 1 2001 12:00AM
241-AW-104	Bi	Supernatant	0.00E+00	kg	TE	1.02	g/mL	347	kL	0.00E+00	ug/g	Jan 1 2001 12:00AM
241-AW-104	Ca	Total	1.22E+03	kg	S/E							Jan 1 2001 12:00AM
241-AW-104	Ca	Salt Cake (Liquids)	8.17E+00	kg	S	1.45	g/mL	136	kL	4.14E+01	ug/g	Jan 1 2001 12:00AM
241-AW-104	Ca	Salt Cake (Solids)	3.01E+02	kg	S	1.6	g/mL	457	kL	4.11E+02	ug/g	Jan 1 2001 12:00AM
241-AW-104	Ca	Sludge (Liquids)	2.56E+00	kg	TE	1.6	g/mL	62	kL	2.59E+01	ug/g	Jan 1 2001 12:00AM
241-AW-104	Ca	Sludge (Solids)	9.05E+02	kg	S	1.28	g/mL	188	kL	3.76E+03	ug/g	Jan 1 2001 12:00AM
241-AW-104	Ca	Supernatant	3.50E+00	kg	S	1.08	g/mL	347	kL	9.35E+00	ug/g	Jan 1 2001 12:00AM
241-AW-104	Cd	Supernatant	1.81E-01	kg	S	1.08	g/mL	347	kL	4.83E-01	ug/g	Jan 1 2001 12:00AM
241-AW-104	Cd	Sludge (Solids)	2.94E+01	kg	S	1.28	g/mL	188	kL	1.22E+02	ug/g	Jan 1 2001 12:00AM
241-AW-104	Cd	Sludge (Liquids)	1.86E-01	kg	S	1.43	g/mL	62	kL	2.10E+00	ug/g	Jan 1 2001 12:00AM
241-AW-104	Cd	Total	3.46E+01	kg	S/E							Jan 1 2001 12:00AM
241-AW-104	Cd	Salt Cake (Solids)	4.45E+00	kg	S	1.6	g/mL	457	kL	6.08E+00	ug/g	Jan 1 2001 12:00AM
241-AW-104	Cd	Salt Cake (Liquids)	4.08E-01	kg	S	1.44	g/mL	136	kL	2.08E+00	ug/g	Jan 1 2001 12:00AM
241-AW-104	Ce	Salt Cake (Solids)	3.90E+01	kg	S	1.6	g/mL	457	kL	5.33E+01	ug/g	Jan 1 2001 12:00AM
241-AW-104	Ce	Sludge (Solids)	1.13E+01	kg	S	1.4	g/mL	188	kL	4.30E+01	ug/g	Jan 1 2001 12:00AM
241-AW-104	Ce	Supernatant	3.50E+00	kg	S	1.08	g/mL	347	kL	9.35E+00	ug/g	Jan 1 2001 12:00AM
241-AW-104	Ce	Salt Cake (Liquids)	8.17E+00	kg	S	1.45	g/mL	136	kL	4.14E+01	ug/g	Jan 1 2001 12:00AM
241-AW-104	Ce	Total	6.57E+01	kg	S/E							Jan 1 2001 12:00AM
241-AW-104	Ce	Sludge (Liquids)	3.73E+00	kg	S	1.33	g/mL	62	kL	4.52E+01	ug/g	Jan 1 2001 12:00AM

CALCULATION SHEET

PROJECT: BPP-WTP
JOB NO.: 24590
CALC NO.: 24590-WTP-M4C-FRP-00001
SHEET REV: 0A
SHEET NO.: 124

BY: E. Barrios
DATE: 12/04/02

SUBJECT: Updated Emissions Run Feed Vector

Tank Name	Analyte	Waste Phase	Inventory	Inventory Units	Basis	Density	Density Units	Volume	Volume Units	Concentration	Concentration Units	Decay Date
241-AW-104	Cl	Total	3.76E+03	kg	S							Jan 1 2001 12:00AM
241-AW-104	Cl	Salt Cake (Liquids)	7.59E+02	kg	S	1.44	g/mL	136	kL	3.88E+03	ug/g	Jan 1 2001 12:00AM
241-AW-104	Cl	Salt Cake (Solids)	2.30E+03	kg	S	1.6	g/mL	457	kL	3.14E+03	ug/g	Jan 1 2001 12:00AM
241-AW-104	Cl	Sludge (Liquids)	2.40E+02	kg	S	1.43	g/mL	62	kL	2.71E+03	ug/g	Jan 1 2001 12:00AM
241-AW-104	Cl	Sludge (Solids)	3.18E+02	kg	S	1.28	g/mL	188	kL	1.32E+03	ug/g	Jan 1 2001 12:00AM
241-AW-104	Cl	Supernatant	1.46E+02	kg	S	1.08	g/mL	347	kL	3.91E+02	ug/g	Jan 1 2001 12:00AM
241-AW-104	Co	Salt Cake (Solids)	7.82E+00	kg	S	1.6	g/mL	457	kL	1.07E+01	ug/g	Jan 1 2001 12:00AM
241-AW-104	Co	Supernatant	7.01E-01	kg	S	1.08	g/mL	347	kL	1.87E+00	ug/g	Jan 1 2001 12:00AM
241-AW-104	Co	Sludge (Solids)	2.26E+00	kg	S	1.4	g/mL	188	kL	8.60E+00	ug/g	Jan 1 2001 12:00AM
241-AW-104	Co	Salt Cake (Liquids)	1.63E+00	kg	S	1.45	g/mL	136	kL	8.28E+00	ug/g	Jan 1 2001 12:00AM
241-AW-104	Co	Total	1.32E+01	kg	S/E							Jan 1 2001 12:00AM
241-AW-104	Co	Sludge (Liquids)	7.44E-01	kg	S	1.33	g/mL	62	kL	9.02E+00	ug/g	Jan 1 2001 12:00AM
241-AW-104	Cr	Total	2.54E+03	kg	S							Jan 1 2001 12:00AM
241-AW-104	Cr	Salt Cake (Liquids)	1.02E+01	kg	S	1.44	g/mL	136	kL	5.23E+01	ug/g	Jan 1 2001 12:00AM
241-AW-104	Cr	Salt Cake (Solids)	2.37E+03	kg	S	1.6	g/mL	457	kL	3.24E+03	ug/g	Jan 1 2001 12:00AM
241-AW-104	Cr	Sludge (Liquids)	3.78E+00	kg	S	1.43	g/mL	62	kL	4.26E+01	ug/g	Jan 1 2001 12:00AM
241-AW-104	Cr	Sludge (Solids)	1.57E+02	kg	S	1.28	g/mL	188	kL	6.52E+02	ug/g	Jan 1 2001 12:00AM
241-AW-104	Cr	Supernatant	1.28E+00	kg	S	1.08	g/mL	347	kL	3.42E+00	ug/g	Jan 1 2001 12:00AM
241-AW-104	Cu	Sludge (Liquids)	3.73E-01	kg	S	1.33	g/mL	62	kL	4.52E+00	ug/g	Jan 1 2001 12:00AM
241-AW-104	Cu	Sludge (Solids)	1.45E+01	kg	S	1.4	g/mL	188	kL	5.51E+01	ug/g	Jan 1 2001 12:00AM
241-AW-104	Cu	Salt Cake (Solids)	3.90E+00	kg	S	1.6	g/mL	457	kL	5.33E+00	ug/g	Jan 1 2001 12:00AM
241-AW-104	Cu	Supernatant	3.50E-01	kg	S	1.08	g/mL	347	kL	9.35E-01	ug/g	Jan 1 2001 12:00AM
241-AW-104	Cu	Salt Cake (Liquids)	8.17E-01	kg	S	1.45	g/mL	136	kL	4.14E+00	ug/g	Jan 1 2001 12:00AM
241-AW-104	Cu	Total	2.00E+01	kg	S/E							Jan 1 2001 12:00AM
241-AW-104	F	Total	3.28E+04	kg	S							Jan 1 2001 12:00AM
241-AW-104	F	Salt Cake (Liquids)	1.66E+01	kg	S	1.45	g/mL	136	kL	8.41E+01	ug/g	Jan 1 2001 12:00AM
241-AW-104	F	Salt Cake (Solids)	3.19E+04	kg	S	1.6	g/mL	457	kL	4.36E+04	ug/g	Jan 1 2001 12:00AM
241-AW-104	F	Sludge (Liquids)	7.13E+01	kg	S	1.43	g/mL	62	kL	8.04E+02	ug/g	Jan 1 2001 12:00AM
241-AW-104	F	Sludge (Solids)	7.17E+02	kg	S	1.28	g/mL	188	kL	2.98E+03	ug/g	Jan 1 2001 12:00AM
241-AW-104	F	Supernatant	7.74E+01	kg	S	1.08	g/mL	347	kL	2.07E+02	ug/g	Jan 1 2001 12:00AM
241-AW-104	Fe	Total	2.56E+03	kg	S/E							Jan 1 2001 12:00AM
241-AW-104	Fe	Salt Cake (Liquids)	4.09E+00	kg	S	1.45	g/mL	136	kL	2.08E+01	ug/g	Jan 1 2001 12:00AM
241-AW-104	Fe	Salt Cake (Solids)	2.72E+02	kg	S	1.6	g/mL	457	kL	3.72E+02	ug/g	Jan 1 2001 12:00AM
241-AW-104	Fe	Sludge (Liquids)	1.28E+00	kg	TE	1.6	g/mL	62	kL	1.29E+01	ug/g	Jan 1 2001 12:00AM
241-AW-104	Fe	Sludge (Solids)	2.28E+03	kg	S	1.28	g/mL	188	kL	9.49E+03	ug/g	Jan 1 2001 12:00AM
241-AW-104	Fe	Supernatant	1.75E+00	kg	S	1.08	g/mL	347	kL	4.68E+00	ug/g	Jan 1 2001 12:00AM
241-AW-104	Hg	Total	0.00E+00	kg	E							Jan 1 2001 12:00AM
241-AW-104	Hg	Salt Cake (Liquids)	0.00E+00	kg	TE	1.6	g/mL	136	kL	0.00E+00	ug/g	Jan 1 2001 12:00AM
241-AW-104	Hg	Salt Cake (Solids)	0.00E+00	kg	TS	1.58	g/mL	457	kL	0.00E+00	ug/g	Jan 1 2001 12:00AM
241-AW-104	Hg	Sludge (Liquids)	0.00E+00	kg	TE	1.6	g/mL	62	kL	0.00E+00	ug/g	Jan 1 2001 12:00AM
241-AW-104	Hg	Sludge (Solids)	0.00E+00	kg	TE	1.2	g/mL	188	kL	0.00E+00	ug/g	Jan 1 2001 12:00AM
241-AW-104	Hg	Supernatant	0.00E+00	kg	TE	1.02	g/mL	347	kL	0.00E+00	ug/g	Jan 1 2001 12:00AM
241-AW-104	K	Total	1.07E+04	kg	S							Jan 1 2001 12:00AM
241-AW-104	K	Salt Cake (Liquids)	2.04E+03	kg	S	1.44	g/mL	136	kL	1.04E+04	ug/g	Jan 1 2001 12:00AM
241-AW-104	K	Salt Cake (Solids)	5.93E+03	kg	S	1.6	g/mL	457	kL	8.11E+03	ug/g	Jan 1 2001 12:00AM
241-AW-104	K	Sludge (Liquids)	5.79E+02	kg	S	1.43	g/mL	62	kL	6.53E+03	ug/g	Jan 1 2001 12:00AM
241-AW-104	K	Sludge (Solids)	1.17E+03	kg	S	1.4	g/mL	188	kL	4.46E+03	ug/g	Jan 1 2001 12:00AM

CALCULATION SHEET

PROJECT: RPP-WTP
JOB NO.: 24590
CALC NO.: 24590-WTP-M4C-FRP-00001
SHEET REV: 0A
SHEET NO.: 125

BY: E. Berrios
DATE: 12/04/02

SUBJECT: Updated Emissions Run Feed Vector

Tank Name	Analyte	Waste Phase	Inventory	Inventory Units	Basis	Density	Density Units	Volume	Volume Units	Concentration	Concentration Units	Decay Date
241-AW-104	K	Supernatant	9.92E+02	kg	S	1.08	g/mL	347	kL	2.65E+03	ug/g	Jan 1 2001 12:00AM
241-AW-104	La	Total	3.97E+01	kg	S/E							Jan 1 2001 12:00AM
241-AW-104	La	Salt Cake (Liquids)	1.76E-01	kg	TE	1.6	g/mL	136	kL	8.11E-01	ug/g	Jan 1 2001 12:00AM
241-AW-104	La	Salt Cake (Solids)	1.95E+01	kg	S	1.6	g/mL	457	kL	2.67E+01	ug/g	Jan 1 2001 12:00AM
241-AW-104	La	Sludge (Liquids)	5.64E-02	kg	TE	1.6	g/mL	62	kL	5.69E-01	ug/g	Jan 1 2001 12:00AM
241-AW-104	La	Sludge (Solids)	2.00E+01	kg	S	1.4	g/mL	188	kL	7.60E+01	ug/g	Jan 1 2001 12:00AM
241-AW-104	La	Supernatant	0.00E+00	kg	TE	1.02	g/mL	347	kL	0.00E+00	ug/g	Jan 1 2001 12:00AM
241-AW-104	Li	Supernatant	3.50E-01	kg	S	1.08	g/mL	347	kL	9.35E-01	ug/g	Jan 1 2001 12:00AM
241-AW-104	Li	Total	8.18E+00	kg	S/E							Jan 1 2001 12:00AM
241-AW-104	Li	Sludge (Liquids)	3.73E-01	kg	S	1.33	g/mL	62	kL	4.52E+00	ug/g	Jan 1 2001 12:00AM
241-AW-104	Li	Salt Cake (Solids)	3.90E+00	kg	S	1.6	g/mL	457	kL	5.33E+00	ug/g	Jan 1 2001 12:00AM
241-AW-104	Li	Sludge (Solids)	2.74E+00	kg	S	1.4	g/mL	188	kL	1.04E+01	ug/g	Jan 1 2001 12:00AM
241-AW-104	Li	Salt Cake (Liquids)	8.17E-01	kg	S	1.45	g/mL	136	kL	4.14E+00	ug/g	Jan 1 2001 12:00AM
241-AW-104	Mg	Sludge (Solids)	1.96E+02	kg	S	1.4	g/mL	188	kL	7.44E+02	ug/g	Jan 1 2001 12:00AM
241-AW-104	Mg	Total	2.50E+02	kg	S/E							Jan 1 2001 12:00AM
241-AW-104	Mg	Salt Cake (Solids)	3.90E+01	kg	S	1.6	g/mL	457	kL	5.33E+01	ug/g	Jan 1 2001 12:00AM
241-AW-104	Mg	Supernatant	3.50E+00	kg	S	1.08	g/mL	347	kL	9.35E+00	ug/g	Jan 1 2001 12:00AM
241-AW-104	Mg	Salt Cake (Liquids)	8.17E+00	kg	S	1.45	g/mL	136	kL	4.14E+01	ug/g	Jan 1 2001 12:00AM
241-AW-104	Mg	Sludge (Liquids)	3.73E+00	kg	S	1.33	g/mL	62	kL	4.52E+01	ug/g	Jan 1 2001 12:00AM
241-AW-104	Mn	Total	1.13E+03	kg	S							Jan 1 2001 12:00AM
241-AW-104	Mn	Salt Cake (Liquids)	8.17E-01	kg	S	1.45	g/mL	136	kL	4.14E+00	ug/g	Jan 1 2001 12:00AM
241-AW-104	Mn	Salt Cake (Solids)	3.41E+02	kg	S	1.6	g/mL	457	kL	4.66E+02	ug/g	Jan 1 2001 12:00AM
241-AW-104	Mn	Sludge (Liquids)	5.27E-01	kg	S	1.43	g/mL	62	kL	5.94E+00	ug/g	Jan 1 2001 12:00AM
241-AW-104	Mn	Sludge (Solids)	7.87E+02	kg	S	1.28	g/mL	188	kL	3.27E+03	ug/g	Jan 1 2001 12:00AM
241-AW-104	Mn	Supernatant	3.50E-01	kg	S	1.08	g/mL	347	kL	9.35E-01	ug/g	Jan 1 2001 12:00AM
241-AW-104	Mo	Sludge (Solids)	1.00E+01	kg	S	1.4	g/mL	188	kL	3.81E+01	ug/g	Jan 1 2001 12:00AM
241-AW-104	Mo	Supernatant	2.19E+00	kg	S	1.08	g/mL	347	kL	5.85E+00	ug/g	Jan 1 2001 12:00AM
241-AW-104	Mo	Salt Cake (Solids)	3.33E+01	kg	S	1.6	g/mL	457	kL	4.56E+01	ug/g	Jan 1 2001 12:00AM
241-AW-104	Mo	Salt Cake (Liquids)	8.95E+00	kg	S	1.44	g/mL	136	kL	4.57E+01	ug/g	Jan 1 2001 12:00AM
241-AW-104	Mo	Sludge (Liquids)	2.90E+00	kg	S	1.43	g/mL	62	kL	3.27E+01	ug/g	Jan 1 2001 12:00AM
241-AW-104	Mo	Total	5.74E+01	kg	S							Jan 1 2001 12:00AM
241-AW-104	Na	Total	2.37E+05	kg	S							Jan 1 2001 12:00AM
241-AW-104	Na	Salt Cake (Liquids)	2.75E+04	kg	S	1.44	g/mL	136	kL	1.40E+05	ug/g	Jan 1 2001 12:00AM
241-AW-104	Na	Salt Cake (Solids)	1.65E+05	kg	S	1.6	g/mL	457	kL	2.25E+05	ug/g	Jan 1 2001 12:00AM
241-AW-104	Na	Sludge (Liquids)	9.98E+03	kg	S	1.43	g/mL	62	kL	1.13E+05	ug/g	Jan 1 2001 12:00AM
241-AW-104	Na	Sludge (Solids)	2.31E+04	kg	S	1.28	g/mL	188	kL	9.61E+04	ug/g	Jan 1 2001 12:00AM
241-AW-104	Na	Supernatant	1.20E+04	kg	S	1.08	g/mL	347	kL	3.20E+04	ug/g	Jan 1 2001 12:00AM
241-AW-104	Nd	Supernatant	3.50E+00	kg	S	1.08	g/mL	347	kL	9.35E+00	ug/g	Jan 1 2001 12:00AM
241-AW-104	Nd	Sludge (Liquids)	3.73E+00	kg	S	1.33	g/mL	62	kL	4.52E+01	ug/g	Jan 1 2001 12:00AM
241-AW-104	Nd	Sludge (Solids)	1.13E+01	kg	S	1.4	g/mL	188	kL	4.30E+01	ug/g	Jan 1 2001 12:00AM
241-AW-104	Nd	Salt Cake (Solids)	3.90E+01	kg	S	1.6	g/mL	457	kL	5.33E+01	ug/g	Jan 1 2001 12:00AM
241-AW-104	Nd	Salt Cake (Liquids)	8.17E+00	kg	S	1.45	g/mL	136	kL	4.14E+01	ug/g	Jan 1 2001 12:00AM
241-AW-104	Nd	Total	6.57E+01	kg	S/E							Jan 1 2001 12:00AM
241-AW-104	Ni	Total	8.91E+01	kg	S							Jan 1 2001 12:00AM
241-AW-104	Ni	Salt Cake (Liquids)	1.63E+00	kg	S	1.44	g/mL	136	kL	8.33E+00	ug/g	Jan 1 2001 12:00AM
241-AW-104	Ni	Salt Cake (Solids)	2.38E+01	kg	S	1.6	g/mL	457	kL	3.25E+01	ug/g	Jan 1 2001 12:00AM
241-AW-104	Ni	Sludge (Liquids)	7.44E-01	kg	S	1.43	g/mL	62	kL	8.39E+00	ug/g	Jan 1 2001 12:00AM

CALCULATION SHEET

PROJECT: RPP-WTP
JOB NO.: 24590
CALC NO.: 24590-WTP-M4C-FRP-00001
SHEET REV: 0A
SHEET NO.: 126

BY: E. Berrios
DATE: 12/04/02

SUBJECT: Updated Emissions Run Fatal Vector

Tank Name	Analyte	Waste Phase	Inventory	Inventory Units	Basis	Density	Density Units	Volume	Volume Units	Concentration	Concentration Units	Decay Date
241-AW-104	Ni	Sludge (Solids)	6.22E+01	kg	S	1.4	g/mL	188	kL	2.37E+02	ug/g	Jan 1 2001 12:00AM
241-AW-104	Ni	Supernatant	7.01E-01	kg	S	1.08	g/mL	347	kL	1.87E+00	ug/g	Jan 1 2001 12:00AM
241-AW-104	NO2	Total	6.83E+04	kg	S							Jan 1 2001 12:00AM
241-AW-104	NO2	Salt Cake (Liquids)	1.36E+04	kg	S	1.44	g/mL	136	kL	6.94E+04	ug/g	Jan 1 2001 12:00AM
241-AW-104	NO2	Salt Cake (Solids)	4.17E+04	kg	S	1.6	g/mL	457	kL	5.70E+04	ug/g	Jan 1 2001 12:00AM
241-AW-104	NO2	Sludge (Liquids)	4.32E+03	kg	S	1.43	g/mL	62	kL	4.87E+04	ug/g	Jan 1 2001 12:00AM
241-AW-104	NO2	Sludge (Solids)	5.82E+03	kg	S	1.28	g/mL	188	kL	2.42E+04	ug/g	Jan 1 2001 12:00AM
241-AW-104	NO2	Supernatant	2.85E+03	kg	S	1.08	g/mL	347	kL	7.61E+03	ug/g	Jan 1 2001 12:00AM
241-AW-104	NO3	Total	1.04E+05	kg	S							Jan 1 2001 12:00AM
241-AW-104	NO3	Salt Cake (Liquids)	2.03E+04	kg	S	1.44	g/mL	136	kL	1.03E+05	ug/g	Jan 1 2001 12:00AM
241-AW-104	NO3	Salt Cake (Solids)	5.97E+04	kg	S	1.6	g/mL	457	kL	8.16E+04	ug/g	Jan 1 2001 12:00AM
241-AW-104	NO3	Sludge (Liquids)	7.25E+03	kg	S	1.43	g/mL	62	kL	8.18E+04	ug/g	Jan 1 2001 12:00AM
241-AW-104	NO3	Sludge (Solids)	1.02E+04	kg	S	1.28	g/mL	188	kL	4.25E+04	ug/g	Jan 1 2001 12:00AM
241-AW-104	NO3	Supernatant	6.24E+03	kg	S	1.08	g/mL	347	kL	1.66E+04	ug/g	Jan 1 2001 12:00AM
241-AW-104	OH	Total	1.66E+05	kg	C							Jan 1 2001 12:00AM
241-AW-104	OH	Salt Cake (Liquids)	6.68E+03	kg	S	1.45	g/mL	136	kL	3.39E+04	ug/g	Jan 1 2001 12:00AM
241-AW-104	OH	Sludge (Liquids)	1.27E+03	kg	S	1.33	g/mL	62	kL	1.54E+04	ug/g	Jan 1 2001 12:00AM
241-AW-104	OH	Supernatant	2.99E+03	kg	S	1.08	g/mL	347	kL	7.98E+03	ug/g	Jan 1 2001 12:00AM
241-AW-104	Oxalate	Sludge (Liquids)	4.68E-02	kg	TE	1.6	g/mL	62	kL	4.72E-01	ug/g	Jan 1 2001 12:00AM
241-AW-104	Oxalate	Supernatant	9.21E+01	kg	S	1.08	g/mL	347	kL	2.46E+02	ug/g	Jan 1 2001 12:00AM
241-AW-104	Oxalate	Sludge (Solids)	6.14E+02	kg	S	1.28	g/mL	188	kL	2.55E+03	ug/g	Jan 1 2001 12:00AM
241-AW-104	Oxalate	Salt Cake (Solids)	8.19E+03	kg	S	1.6	g/mL	457	kL	1.12E+04	ug/g	Jan 1 2001 12:00AM
241-AW-104	Oxalate	Total	8.90E+03	kg	S/E							Jan 1 2001 12:00AM
241-AW-104	Pb	Total	1.36E+02	kg	S							Jan 1 2001 12:00AM
241-AW-104	Pb	Salt Cake (Liquids)	8.17E+00	kg	S	1.45	g/mL	136	kL	4.14E+01	ug/g	Jan 1 2001 12:00AM
241-AW-104	Pb	Salt Cake (Solids)	4.20E+01	kg	S	1.6	g/mL	457	kL	5.75E+01	ug/g	Jan 1 2001 12:00AM
241-AW-104	Pb	Sludge (Liquids)	3.73E-01	kg	S	1.43	g/mL	62	kL	4.20E+00	ug/g	Jan 1 2001 12:00AM
241-AW-104	Pb	Sludge (Solids)	8.16E+01	kg	S	1.4	g/mL	188	kL	3.10E+02	ug/g	Jan 1 2001 12:00AM
241-AW-104	Pb	Supernatant	3.50E+00	kg	S	1.08	g/mL	347	kL	9.35E+00	ug/g	Jan 1 2001 12:00AM
241-AW-104	PO4	Total	3.29E+03	kg	S							Jan 1 2001 12:00AM
241-AW-104	PO4	Salt Cake (Liquids)	1.66E+02	kg	S	1.45	g/mL	136	kL	8.41E+02	ug/g	Jan 1 2001 12:00AM
241-AW-104	PO4	Salt Cake (Solids)	2.78E+03	kg	S	1.6	g/mL	457	kL	3.80E+03	ug/g	Jan 1 2001 12:00AM
241-AW-104	PO4	Sludge (Liquids)	3.08E+01	kg	S	1.33	g/mL	62	kL	3.74E+02	ug/g	Jan 1 2001 12:00AM
241-AW-104	PO4	Sludge (Solids)	1.46E+02	kg	S	1.28	g/mL	188	kL	6.06E+02	ug/g	Jan 1 2001 12:00AM
241-AW-104	PO4	Supernatant	1.65E+02	kg	S	1.08	g/mL	347	kL	4.40E+02	ug/g	Jan 1 2001 12:00AM
241-AW-104	Sb	Sludge (Liquids)	2.24E+00	kg	S	1.33	g/mL	62	kL	2.71E+01	ug/g	Jan 1 2001 12:00AM
241-AW-104	Sb	Salt Cake (Liquids)	4.91E+00	kg	S	1.45	g/mL	136	kL	2.49E+01	ug/g	Jan 1 2001 12:00AM
241-AW-104	Sb	Sludge (Solids)	6.79E+00	kg	S	1.4	g/mL	188	kL	2.58E+01	ug/g	Jan 1 2001 12:00AM
241-AW-104	Sb	Supernatant	2.10E+00	kg	S	1.08	g/mL	347	kL	5.61E+00	ug/g	Jan 1 2001 12:00AM
241-AW-104	Sb	Salt Cake (Solids)	2.34E+01	kg	S	1.6	g/mL	457	kL	3.20E+01	ug/g	Jan 1 2001 12:00AM
241-AW-104	Sb	Total	3.94E+01	kg	S/E							Jan 1 2001 12:00AM
241-AW-104	Se	Salt Cake (Solids)	3.90E+01	kg	S	1.6	g/mL	457	kL	5.33E+01	ug/g	Jan 1 2001 12:00AM
241-AW-104	Se	Supernatant	3.50E+00	kg	S	1.08	g/mL	347	kL	9.35E+00	ug/g	Jan 1 2001 12:00AM
241-AW-104	Se	Sludge (Solids)	1.13E+01	kg	S	1.4	g/mL	188	kL	4.30E+01	ug/g	Jan 1 2001 12:00AM
241-AW-104	Se	Total	6.20E+01	kg	S/E							Jan 1 2001 12:00AM
241-AW-104	Se	Salt Cake (Liquids)	8.17E+00	kg	S	1.45	g/mL	136	kL	4.14E+01	ug/g	Jan 1 2001 12:00AM
241-AW-104	Si	Total	1.45E+03	kg	S							Jan 1 2001 12:00AM

CALCULATION SHEET

PROJECT: RPP-WTP
JOB NO.: 24590
CALC NO.: 24590-WTP-M4C-FRP-00001
SHEET REV: 0A
SHEET NO.: 127

BY: E. Berrios
DATE: 12/04/02

SUBJECT: Updated Emissions Run Feed Vector

Tank Name	Analyte	Waste Phase	Inventory	Inventory Units	Basis	Density	Density Units	Volume	Volume Units	Concentration	Concentration Units	Decay Date
241-AW-104	Si	Salt Cake (Liquids)	2.19E+01	kg	S	1.44	g/mL	136	kL	1.12E+02	ug/g	Jan 1 2001 12:00AM
241-AW-104	Si	Salt Cake (Solids)	9.29E+02	kg	S	1.6	g/mL	457	kL	1.27E+03	ug/g	Jan 1 2001 12:00AM
241-AW-104	Si	Sludge (Liquids)	6.39E+00	kg	S	1.43	g/mL	62	kL	7.20E+01	ug/g	Jan 1 2001 12:00AM
241-AW-104	Si	Sludge (Solids)	4.72E+02	kg	S	1.28	g/mL	188	kL	1.96E+03	ug/g	Jan 1 2001 12:00AM
241-AW-104	Si	Supernatant	2.53E+01	kg	S	1.08	g/mL	347	kL	6.76E+01	ug/g	Jan 1 2001 12:00AM
241-AW-104	SO4	Total	1.93E+04	kg	S							Jan 1 2001 12:00AM
241-AW-104	SO4	Salt Cake (Liquids)	1.92E+02	kg	S	1.45	g/mL	136	kL	9.72E+02	ug/g	Jan 1 2001 12:00AM
241-AW-104	SO4	Salt Cake (Solids)	1.80E+04	kg	S	1.6	g/mL	457	kL	2.47E+04	ug/g	Jan 1 2001 12:00AM
241-AW-104	SO4	Sludge (Liquids)	1.95E+02	kg	S	1.43	g/mL	62	kL	2.20E+03	ug/g	Jan 1 2001 12:00AM
241-AW-104	SO4	Sludge (Solids)	5.41E+02	kg	S	1.28	g/mL	188	kL	2.25E+03	ug/g	Jan 1 2001 12:00AM
241-AW-104	SO4	Supernatant	3.36E+02	kg	S	1.08	g/mL	347	kL	8.96E+02	ug/g	Jan 1 2001 12:00AM
241-AW-104	Sr	Total	9.29E+00	kg	S/C/E							Jan 1 2001 12:00AM
241-AW-104	Sr	Salt Cake (Liquids)	8.33E-02	kg	C		g/mL	136	kL	3.83E-01	ug/g	Jan 1 2001 12:00AM
241-AW-104	Sr	Salt Cake (Solids)	3.90E+00	kg	S	1.6	g/mL	457	kL	5.33E+00	ug/g	Jan 1 2001 12:00AM
241-AW-104	Sr	Sludge (Liquids)	3.73E-01	kg	S	1.33	g/mL	62	kL	4.52E+00	ug/g	Jan 1 2001 12:00AM
241-AW-104	Sr	Sludge (Solids)	4.94E+00	kg	S	1.4	g/mL	188	kL	1.88E+01	ug/g	Jan 1 2001 12:00AM
241-AW-104	Sr	Supernatant	2.91E-04	kg	C		g/mL	347	kL	7.36E-04	ug/g	Jan 1 2001 12:00AM
241-AW-104	Th	Sludge (Liquids)	3.73E+00	kg	S	1.33	g/mL	62	kL	4.52E+01	ug/g	Jan 1 2001 12:00AM
241-AW-104	Th	Salt Cake (Liquids)	8.17E+00	kg	S	1.45	g/mL	136	kL	4.14E+01	ug/g	Jan 1 2001 12:00AM
241-AW-104	Th	Salt Cake (Solids)	3.90E+01	kg	S	1.6	g/mL	457	kL	5.33E+01	ug/g	Jan 1 2001 12:00AM
241-AW-104	Th	Supernatant	3.50E+00	kg	S	1.08	g/mL	347	kL	9.35E+00	ug/g	Jan 1 2001 12:00AM
241-AW-104	Th	Total	6.57E+01	kg	S/E							Jan 1 2001 12:00AM
241-AW-104	Th	Sludge (Solids)	1.13E+01	kg	S	1.4	g/mL	188	kL	4.30E+01	ug/g	Jan 1 2001 12:00AM
241-AW-104	Ti	Salt Cake (Liquids)	8.17E-01	kg	S	1.45	g/mL	136	kL	4.14E+00	ug/g	Jan 1 2001 12:00AM
241-AW-104	Ti	Total	2.10E+01	kg	S/E							Jan 1 2001 12:00AM
241-AW-104	Ti	Supernatant	3.50E-01	kg	S	1.08	g/mL	347	kL	9.35E-01	ug/g	Jan 1 2001 12:00AM
241-AW-104	Ti	Sludge (Liquids)	3.73E-01	kg	S	1.33	g/mL	62	kL	4.52E+00	ug/g	Jan 1 2001 12:00AM
241-AW-104	Ti	Salt Cake (Solids)	3.90E+00	kg	S	1.6	g/mL	457	kL	5.33E+00	ug/g	Jan 1 2001 12:00AM
241-AW-104	Ti	Sludge (Solids)	1.56E+01	kg	S	1.4	g/mL	188	kL	5.93E+01	ug/g	Jan 1 2001 12:00AM
241-AW-104	TIC as CO3	Total	5.68E+04	kg	S/E							Jan 1 2001 12:00AM
241-AW-104	TIC as CO3	Salt Cake (Liquids)	4.69E+03	kg	S	1.44	g/mL	136	kL	2.40E+04	ug/g	Jan 1 2001 12:00AM
241-AW-104	TIC as CO3	Salt Cake (Solids)	3.48E+04	kg	S	1.6	g/mL	457	kL	4.76E+04	ug/g	Jan 1 2001 12:00AM
241-AW-104	TIC as CO3	Sludge (Liquids)	9.17E+02	kg	TE	1.6	g/mL	62	kL	9.24E+03	ug/g	Jan 1 2001 12:00AM
241-AW-104	TIC as CO3	Sludge (Solids)	1.22E+04	kg	S	1.4	g/mL	188	kL	4.64E+04	ug/g	Jan 1 2001 12:00AM
241-AW-104	TIC as CO3	Supernatant	4.16E+03	kg	S	1.08	g/mL	347	kL	1.11E+04	ug/g	Jan 1 2001 12:00AM
241-AW-104	Tl	Total	1.32E+02	kg	S/E							Jan 1 2001 12:00AM
241-AW-104	Tl	Sludge (Liquids)	7.44E+00	kg	S	1.33	g/mL	62	kL	9.02E+01	ug/g	Jan 1 2001 12:00AM
241-AW-104	Tl	Supernatant	7.01E+00	kg	S	1.08	g/mL	347	kL	1.87E+01	ug/g	Jan 1 2001 12:00AM
241-AW-104	Tl	Salt Cake (Liquids)	1.63E+01	kg	S	1.45	g/mL	136	kL	8.28E+01	ug/g	Jan 1 2001 12:00AM
241-AW-104	Tl	Salt Cake (Solids)	7.82E+01	kg	S	1.6	g/mL	457	kL	1.07E+02	ug/g	Jan 1 2001 12:00AM
241-AW-104	Tl	Sludge (Solids)	2.26E+01	kg	S	1.4	g/mL	188	kL	8.60E+01	ug/g	Jan 1 2001 12:00AM

CALCULATION SHEET

PROJECT: RPP-WTP
JOB NO.: 24590
CALC NO.: 24590-WTP-M4C-FRP-00001
SHEET REV: 0A
SHEET NO.: 128

BY: E. Berrios
DATE: 12/04/02

SUBJECT: Updated Emissions Run Feed Vector

Tank Name	Analyte	Waste Phase	Inventory	Inventory Units	Basis	Density	Density Units	Volume	Volume Units	Concentration	Concentration Units	Decay Date
241-AW-104	TOC	Total	9.37E+03	kg	S/E							Jan 1 2001 12:00AM
241-AW-104	TOC	Salt Cake (Liquids)	5.14E+02	kg	S	1.44	g/mL	136	kL	2.63E+03	ug/g	Jan 1 2001 12:00AM
241-AW-104	TOC	Salt Cake (Solids)	4.51E+03	kg	S	1.6	g/mL	457	kL	6.17E+03	ug/g	Jan 1 2001 12:00AM
241-AW-104	TOC	Sludge (Liquids)	9.46E+02	kg	TE	1.6	g/mL	62	kL	9.53E+03	ug/g	Jan 1 2001 12:00AM
241-AW-104	TOC	Sludge (Solids)	2.84E+03	kg	S	1.4	g/mL	188	kL	1.08E+04	ug/g	Jan 1 2001 12:00AM
241-AW-104	TOC	Supernatant	5.59E+02	kg	S	1.14	g/mL	347	kL	1.41E+03	ug/g	Jan 1 2001 12:00AM
241-AW-104	TotalAlpha	Salt Cake (Solids)	7.97E+01	Ci	S	1.6	g/mL	457	kL	1.09E-01	uCi/g	Jan 1 2001 12:00AM
241-AW-104	TotalAlpha	Total	7.43E+02	Ci	S							Jan 1 2001 12:00AM
241-AW-104	TotalAlpha	Salt Cake (Liquids)	1.48E+00	Ci	S	1.44	g/mL	136	kL	7.57E-03	uCi/g	Jan 1 2001 12:00AM
241-AW-104	TotalAlpha	Sludge (Liquids)	4.45E-01	Ci	S	1.43	g/mL	62	kL	5.02E-03	uCi/g	Jan 1 2001 12:00AM
241-AW-104	TotalAlpha	Sludge (Solids)	6.62E+02	Ci	S	1.28	g/mL	188	kL	2.75E+00	uCi/g	Jan 1 2001 12:00AM
241-AW-104	UTOTAL	Total	7.13E+03	kg	S/E							Jan 1 2001 12:00AM
241-AW-104	UTOTAL	Salt Cake (Liquids)	6.01E+00	kg	TE	1.6	g/mL	136	kL	2.76E+01	ug/g	Jan 1 2001 12:00AM
241-AW-104	UTOTAL	Salt Cake (Solids)	2.14E+02	kg	S	1.6	g/mL	457	kL	2.92E+02	ug/g	Jan 1 2001 12:00AM
241-AW-104	UTOTAL	Sludge (Liquids)	1.92E+00	kg	TE	1.6	g/mL	62	kL	1.94E+01	ug/g	Jan 1 2001 12:00AM
241-AW-104	UTOTAL	Sludge (Solids)	6.91E+03	kg	S	1.28	g/mL	188	kL	2.87E+04	ug/g	Jan 1 2001 12:00AM
241-AW-104	UTOTAL	Supernatant	1.86E+00	kg	S	1.14	g/mL	347	kL	4.69E+00	ug/g	Jan 1 2001 12:00AM
241-AW-104	V	Salt Cake (Liquids)	4.09E+00	kg	S	1.45	g/mL	136	kL	2.08E+01	ug/g	Jan 1 2001 12:00AM
241-AW-104	V	Sludge (Solids)	5.66E+00	kg	S	1.4	g/mL	188	kL	2.15E+01	ug/g	Jan 1 2001 12:00AM
241-AW-104	V	Salt Cake (Solids)	1.95E+01	kg	S	1.6	g/mL	457	kL	2.67E+01	ug/g	Jan 1 2001 12:00AM
241-AW-104	V	Sludge (Liquids)	1.87E+00	kg	S	1.33	g/mL	62	kL	2.26E+01	ug/g	Jan 1 2001 12:00AM
241-AW-104	V	Supernatant	1.75E+00	kg	S	1.08	g/mL	347	kL	4.68E+00	ug/g	Jan 1 2001 12:00AM
241-AW-104	V	Total	3.29E+01	kg	S/E							Jan 1 2001 12:00AM
241-AW-104	Y	Salt Cake (Liquids)	8.17E-01	kg	S	1.45	g/mL	136	kL	4.14E+00	ug/g	Jan 1 2001 12:00AM
241-AW-104	Y	Supernatant	3.50E-01	kg	S	1.08	g/mL	347	kL	9.35E-01	ug/g	Jan 1 2001 12:00AM
241-AW-104	Y	Sludge (Liquids)	3.73E-01	kg	S	1.33	g/mL	62	kL	4.52E+00	ug/g	Jan 1 2001 12:00AM
241-AW-104	Y	Total	6.57E+00	kg	S/E							Jan 1 2001 12:00AM
241-AW-104	Y	Salt Cake (Solids)	3.90E+00	kg	S	1.6	g/mL	457	kL	5.33E+00	ug/g	Jan 1 2001 12:00AM
241-AW-104	Y	Sludge (Solids)	1.13E+00	kg	S	1.4	g/mL	188	kL	4.29E+00	ug/g	Jan 1 2001 12:00AM
241-AW-104	Zn	Supernatant	3.50E-01	kg	S	1.08	g/mL	347	kL	9.35E-01	ug/g	Jan 1 2001 12:00AM
241-AW-104	Zn	Salt Cake (Solids)	3.90E+00	kg	S	1.6	g/mL	457	kL	5.33E+00	ug/g	Jan 1 2001 12:00AM
241-AW-104	Zn	Sludge (Solids)	2.76E+01	kg	S	1.4	g/mL	188	kL	1.05E+02	ug/g	Jan 1 2001 12:00AM
241-AW-104	Zn	Sludge (Liquids)	3.73E-01	kg	S	1.33	g/mL	62	kL	4.52E+00	ug/g	Jan 1 2001 12:00AM
241-AW-104	Zn	Salt Cake (Liquids)	8.17E-01	kg	S	1.45	g/mL	136	kL	4.14E+00	ug/g	Jan 1 2001 12:00AM
241-AW-104	Zn	Total	3.31E+01	kg	S/E							Jan 1 2001 12:00AM
241-AW-104	Zr	Total	2.41E+03	kg	S/E							Jan 1 2001 12:00AM
241-AW-104	Zr	Salt Cake (Liquids)	1.20E+00	kg	S	1.44	g/mL	136	kL	6.12E+00	ug/g	Jan 1 2001 12:00AM
241-AW-104	Zr	Salt Cake (Solids)	3.04E+02	kg	S	1.6	g/mL	457	kL	4.16E+02	ug/g	Jan 1 2001 12:00AM
241-AW-104	Zr	Sludge (Liquids)	5.05E-01	kg	S	1.43	g/mL	62	kL	5.70E+00	ug/g	Jan 1 2001 12:00AM
241-AW-104	Zr	Sludge (Solids)	2.10E+03	kg	E	1.28	g/mL	188	kL	8.73E+03	ug/g	Jan 1 2001 12:00AM
241-AW-104	Zr	Supernatant	3.50E-01	kg	S	1.08	g/mL	347	kL	9.35E-01	ug/g	Jan 1 2001 12:00AM
241-C-107	106Ru	Total	1.13E-02	Ci	E							Jan 1 2001 12:00AM
241-C-107	106Ru	Sludge	6.83E-11	Ci	TS	1.41	g/mL	511	kL	9.48E-14	uCi/g	Jan 1 2001 12:00AM
241-C-107	106Ru	Sludge	1.50E-07	Ci	TS	1.71	g/mL	90	kL	9.78E-10	uCi/g	Jan 1 2001 12:00AM
241-C-107	106Ru	Sludge	1.13E-02	Ci	TE	1.32	g/mL	339	kL	2.52E-05	uCi/g	Jan 1 2001 12:00AM
241-C-107	113mCd	Total	1.19E+03	Ci	E							Jan 1 2001 12:00AM
241-C-107	113mCd	Sludge	1.69E-01	Ci	TS	1.41	g/mL	511	kL	2.34E-04	uCi/g	Jan 1 2001 12:00AM

CALCULATION SHEET

PROJECT: RPP-WTP
JOB NO.: 24590
CALC NO.: 24590-WTP-M4C-FRP-00001
SHEET REV: 0A
SHEET NO.: 129

BY: E. Berrios
DATE: 12/04/02

SUBJECT: Updated Emissions Run Feed Vector

Tank Name	Analyte	Waste Phase	Inventory	Inventory Units	Basis	Density	Density Units	Volume	Volume Units	Concentration	Concentration Units	Decay Date
241-C-107	113mCd	Sludge	2.80E-02	Ci	TS	1.71	g/mL	90	kL	1.82E-04	uCi/g	Jan 1 2001 12:00AM
241-C-107	113mCd	Sludge	1.19E+03	Ci	TE	1.32	g/mL	339	kL	2.65E+00	uCi/g	Jan 1 2001 12:00AM
241-C-107	125Sb	Total	7.42E+00	Ci	E							Jan 1 2001 12:00AM
241-C-107	125Sb	Sludge	3.37E-03	Ci	TS	1.41	g/mL	511	kL	4.67E-06	uCi/g	Jan 1 2001 12:00AM
241-C-107	125Sb	Sludge	1.06E-02	Ci	TS	1.71	g/mL	90	kL	6.88E-05	uCi/g	Jan 1 2001 12:00AM
241-C-107	125Sb	Sludge	7.41E+00	Ci	TE	1.32	g/mL	339	kL	1.66E-02	uCi/g	Jan 1 2001 12:00AM
241-C-107	126Sn	Total	6.37E+01	Ci	S							Jan 1 2001 12:00AM
241-C-107	126Sn	Sludge	3.46E+01	Ci	S	1.55	g/mL	511	kL	4.37E-02	uCi/g	Jan 1 2001 12:00AM
241-C-107	126Sn	Sludge	6.10E+00	Ci	S	1.55	g/mL	90	kL	4.37E-02	uCi/g	Jan 1 2001 12:00AM
241-C-107	126Sn	Sludge	2.30E+01	Ci	S	1.55	g/mL	339	kL	4.37E-02	uCi/g	Jan 1 2001 12:00AM
241-C-107	129I	Total	4.83E-02	Ci	E							Jan 1 2001 12:00AM
241-C-107	129I	Sludge	1.27E-03	Ci	TS	1.41	g/mL	511	kL	1.77E-06	uCi/g	Jan 1 2001 12:00AM
241-C-107	129I	Sludge	1.09E-04	Ci	TS	1.71	g/mL	90	kL	7.07E-07	uCi/g	Jan 1 2001 12:00AM
241-C-107	129I	Sludge	4.69E-02	Ci	TE	1.32	g/mL	339	kL	1.05E-04	uCi/g	Jan 1 2001 12:00AM
241-C-107	134Cs	Total	4.90E-01	Ci	E							Jan 1 2001 12:00AM
241-C-107	134Cs	Sludge	7.47E-05	Ci	TS	1.41	g/mL	511	kL	1.04E-07	uCi/g	Jan 1 2001 12:00AM
241-C-107	134Cs	Sludge	3.85E-04	Ci	TS	1.71	g/mL	90	kL	2.50E-06	uCi/g	Jan 1 2001 12:00AM
241-C-107	134Cs	Sludge	4.90E-01	Ci	TE	1.32	g/mL	339	kL	1.09E-03	uCi/g	Jan 1 2001 12:00AM
241-C-107	137Cs	Total	6.35E+04	Ci	S							Jan 1 2001 12:00AM
241-C-107	137Cs	Sludge	3.45E+04	Ci	S	1.55	g/mL	511	kL	4.36E+01	uCi/g	Jan 1 2001 12:00AM
241-C-107	137Cs	Sludge	6.08E+03	Ci	S	1.55	g/mL	90	kL	4.36E+01	uCi/g	Jan 1 2001 12:00AM
241-C-107	137Cs	Sludge	2.29E+04	Ci	S	1.55	g/mL	339	kL	4.36E+01	uCi/g	Jan 1 2001 12:00AM
241-C-107	137mBa	Total	6.01E+04	Ci	C							Jan 1 2001 12:00AM
241-C-107	137mBa	Sludge	3.27E+04	Ci	C		g/mL	511	kL	4.12E+01	uCi/g	Jan 1 2001 12:00AM
241-C-107	137mBa	Sludge	5.75E+03	Ci	C		g/mL	90	kL	4.12E+01	uCi/g	Jan 1 2001 12:00AM
241-C-107	137mBa	Sludge	2.17E+04	Ci	C		g/mL	339	kL	4.12E+01	uCi/g	Jan 1 2001 12:00AM
241-C-107	14C	Total	3.80E+00	Ci	E							Jan 1 2001 12:00AM
241-C-107	14C	Sludge	2.25E-01	Ci	TS	1.41	g/mL	511	kL	3.13E-04	uCi/g	Jan 1 2001 12:00AM
241-C-107	14C	Sludge	7.67E-03	Ci	TS	1.71	g/mL	90	kL	4.98E-05	uCi/g	Jan 1 2001 12:00AM
241-C-107	14C	Sludge	3.57E+00	Ci	TE	1.32	g/mL	339	kL	7.98E-03	uCi/g	Jan 1 2001 12:00AM
241-C-107	151Sm	Total	6.36E+05	Ci	E							Jan 1 2001 12:00AM
241-C-107	151Sm	Sludge	7.27E+01	Ci	TS	1.41	g/mL	511	kL	1.01E-01	uCi/g	Jan 1 2001 12:00AM
241-C-107	151Sm	Sludge	5.84E+00	Ci	TS	1.71	g/mL	90	kL	3.79E-02	uCi/g	Jan 1 2001 12:00AM
241-C-107	151Sm	Sludge	6.36E+05	Ci	TE	1.32	g/mL	339	kL	1.42E+03	uCi/g	Jan 1 2001 12:00AM
241-C-107	152Eu	Total	1.17E+02	Ci	E							Jan 1 2001 12:00AM
241-C-107	152Eu	Sludge	1.89E-02	Ci	TS	1.41	g/mL	511	kL	2.63E-05	uCi/g	Jan 1 2001 12:00AM
241-C-107	152Eu	Sludge	4.54E-02	Ci	TS	1.71	g/mL	90	kL	2.95E-04	uCi/g	Jan 1 2001 12:00AM
241-C-107	152Eu	Sludge	1.17E+02	Ci	TE	1.32	g/mL	339	kL	2.62E-01	uCi/g	Jan 1 2001 12:00AM
241-C-107	154Eu	Total	1.60E+03	Ci	E							Jan 1 2001 12:00AM
241-C-107	154Eu	Sludge	1.67E+00	Ci	TS	1.41	g/mL	511	kL	2.31E-03	uCi/g	Jan 1 2001 12:00AM
241-C-107	154Eu	Sludge	1.26E-01	Ci	TS	1.71	g/mL	90	kL	8.19E-04	uCi/g	Jan 1 2001 12:00AM
241-C-107	154Eu	Sludge	1.60E+03	Ci	E	1.55	g/mL	339	kL	3.04E+00	uCi/g	Jan 1 2001 12:00AM
241-C-107	155Eu	Total	1.04E+03	Ci	E							Jan 1 2001 12:00AM
241-C-107	155Eu	Sludge	1.26E+00	Ci	TS	1.41	g/mL	511	kL	1.75E-03	uCi/g	Jan 1 2001 12:00AM
241-C-107	155Eu	Sludge	1.74E+00	Ci	TS	1.71	g/mL	90	kL	1.13E-02	uCi/g	Jan 1 2001 12:00AM
241-C-107	155Eu	Sludge	1.04E+03	Ci	E	1.55	g/mL	339	kL	1.98E+00	uCi/g	Jan 1 2001 12:00AM
241-C-107	226Ra	Sludge	2.16E-02	Ci	TE	1.32	g/mL	339	kL	4.82E-05	uCi/g	Jan 1 2001 12:00AM

CALCULATION SHEET

PROJECT: BPP-WTP
JOB NO.: 24590
CALC NO.: 24590-WTP-M4C-FRP-00001
SHEET REV: 06
SHEET NO.: 130

BY: E. Berrios
DATE: 12/04/02

SUBJECT: Updated Emissions Run Feed Vector

Tank Name	Analyte	Waste Phase	Inventory	Inventory Units	Basis	Density	Density Units	Volume	Volume Units	Concentration	Concentration Units	Decay Date
241-C-107	226Ra	Total	2.16E-02	Ci	E							Jan 1 2001 12:00AM
241-C-107	226Ra	Sludge	5.91E-06	Ci	TS	1.41	g/mL	511	kL	8.20E-09	uCi/g	Jan 1 2001 12:00AM
241-C-107	226Ra	Sludge	1.10E-07	Ci	TS	1.71	g/mL	90	kL	7.18E-10	uCi/g	Jan 1 2001 12:00AM
241-C-107	227Ac	Total	1.41E-01	Ci	E							Jan 1 2001 12:00AM
241-C-107	227Ac	Sludge	3.72E-05	Ci	TS	1.41	g/mL	511	kL	5.16E-08	uCi/g	Jan 1 2001 12:00AM
241-C-107	227Ac	Sludge	1.79E-02	Ci	TS	1.71	g/mL	90	kL	1.16E-04	uCi/g	Jan 1 2001 12:00AM
241-C-107	227Ac	Sludge	1.23E-01	Ci	TE	1.32	g/mL	339	kL	2.75E-04	uCi/g	Jan 1 2001 12:00AM
241-C-107	228Ra	Total	4.85E-02	Ci	E							Jan 1 2001 12:00AM
241-C-107	228Ra	Sludge	2.52E-02	Ci	TS	1.41	g/mL	511	kL	3.50E-05	uCi/g	Jan 1 2001 12:00AM
241-C-107	228Ra	Sludge	5.25E-03	Ci	TS	1.71	g/mL	90	kL	3.41E-05	uCi/g	Jan 1 2001 12:00AM
241-C-107	228Ra	Sludge	1.80E-02	Ci	TE	1.32	g/mL	339	kL	4.02E-05	uCi/g	Jan 1 2001 12:00AM
241-C-107	229Th	Total	2.43E-03	Ci	E							Jan 1 2001 12:00AM
241-C-107	229Th	Sludge	2.21E-08	Ci	TS	1.41	g/mL	511	kL	3.07E-11	uCi/g	Jan 1 2001 12:00AM
241-C-107	229Th	Sludge	2.41E-03	Ci	TS	1.71	g/mL	90	kL	1.57E-05	uCi/g	Jan 1 2001 12:00AM
241-C-107	229Th	Sludge	1.63E-05	Ci	TE	1.32	g/mL	339	kL	3.65E-08	uCi/g	Jan 1 2001 12:00AM
241-C-107	231Pa	Total	1.92E-01	Ci	E							Jan 1 2001 12:00AM
241-C-107	231Pa	Sludge	6.53E-05	Ci	TS	1.41	g/mL	511	kL	9.06E-08	uCi/g	Jan 1 2001 12:00AM
241-C-107	231Pa	Sludge	2.41E-02	Ci	TS	1.71	g/mL	90	kL	1.57E-04	uCi/g	Jan 1 2001 12:00AM
241-C-107	231Pa	Sludge	1.68E-01	Ci	TE	1.32	g/mL	339	kL	3.74E-04	uCi/g	Jan 1 2001 12:00AM
241-C-107	232Th	Total	7.28E-02	Ci	S							Jan 1 2001 12:00AM
241-C-107	232Th	Sludge	3.96E-02	Ci	S	1.55	g/mL	511	kL	5.00E-05	uCi/g	Jan 1 2001 12:00AM
241-C-107	232Th	Sludge	6.97E-03	Ci	S	1.55	g/mL	90	kL	5.00E-05	uCi/g	Jan 1 2001 12:00AM
241-C-107	232Th	Sludge	2.63E-02	Ci	S	1.55	g/mL	339	kL	5.00E-05	uCi/g	Jan 1 2001 12:00AM
241-C-107	232U	Total	5.45E-03	Ci	E							Jan 1 2001 12:00AM
241-C-107	232U	Sludge	8.59E-06	Ci	TS	1.41	g/mL	511	kL	1.08E-08	uCi/g	Jan 1 2001 12:00AM
241-C-107	232U	Sludge	5.44E-03	Ci	TS	1.71	g/mL	90	kL	3.90E-05	uCi/g	Jan 1 2001 12:00AM
241-C-107	232U	Sludge	3.05E-06	Ci	TE	1.32	g/mL	339	kL	5.80E-09	uCi/g	Jan 1 2001 12:00AM
241-C-107	233U	Total	2.26E-02	Ci	E							Jan 1 2001 12:00AM
241-C-107	233U	Sludge	4.66E-07	Ci	TS	1.41	g/mL	511	kL	5.88E-10	uCi/g	Jan 1 2001 12:00AM
241-C-107	233U	Sludge	2.26E-02	Ci	TS	1.71	g/mL	90	kL	1.62E-04	uCi/g	Jan 1 2001 12:00AM
241-C-107	233U	Sludge	4.56E-08	Ci	TE	1.32	g/mL	339	kL	8.68E-11	uCi/g	Jan 1 2001 12:00AM
241-C-107	234U	Sludge	5.19E-01	Ci	TS	1.41	g/mL	511	kL	6.55E-04	uCi/g	Jan 1 2001 12:00AM
241-C-107	234U	Sludge	3.04E-02	Ci	TS	1.71	g/mL	90	kL	2.18E-04	uCi/g	Jan 1 2001 12:00AM
241-C-107	234U	Sludge	1.37E-02	Ci	TE	1.32	g/mL	339	kL	2.60E-05	uCi/g	Jan 1 2001 12:00AM
241-C-107	234U	Total	5.63E-01	Ci	E							Jan 1 2001 12:00AM
241-C-107	235U	Total	1.37E-01	Ci	E							Jan 1 2001 12:00AM
241-C-107	235U	Sludge	8.95E-02	Ci	E	1.55	g/mL	511	kL	1.13E-04	uCi/g	Jan 1 2001 12:00AM
241-C-107	235U	Sludge	2.59E-02	Ci	E	1.55	g/mL	90	kL	1.86E-04	uCi/g	Jan 1 2001 12:00AM
241-C-107	235U	Sludge	2.11E-02	Ci	E	1.55	g/mL	339	kL	4.01E-05	uCi/g	Jan 1 2001 12:00AM
241-C-107	236U	Total	8.92E-02	Ci	E							Jan 1 2001 12:00AM
241-C-107	236U	Sludge	5.84E-02	Ci	E	1.55	g/mL	511	kL	7.37E-05	uCi/g	Jan 1 2001 12:00AM
241-C-107	236U	Sludge	1.70E-02	Ci	E	1.55	g/mL	90	kL	1.22E-04	uCi/g	Jan 1 2001 12:00AM
241-C-107	236U	Sludge	1.38E-02	Ci	E	1.55	g/mL	339	kL	2.63E-05	uCi/g	Jan 1 2001 12:00AM
241-C-107	237Np	Total	8.07E-02	Ci	E							Jan 1 2001 12:00AM
241-C-107	237Np	Sludge	4.17E-03	Ci	TS	1.41	g/mL	511	kL	5.79E-06	uCi/g	Jan 1 2001 12:00AM
241-C-107	237Np	Sludge	4.22E-04	Ci	TS	1.71	g/mL	90	kL	2.74E-06	uCi/g	Jan 1 2001 12:00AM
241-C-107	237Np	Sludge	7.61E-02	Ci	TE	1.32	g/mL	339	kL	1.70E-04	uCi/g	Jan 1 2001 12:00AM

CALCULATION SHEET

PROJECT: RPP-WTP
JOB NO.: 24590
CALC NO.: 24590-WTP-MMC-FRP-00001
SHEET REV: 0A
SHEET NO.: 131

BY: E. Berrios
DATE: 12/04/02

SUBJECT: Updated Emissions Run Feed Vector

Tank Name	Analyte	Waste Phase	Inventory	Inventory Units	Basis	Density	Density Units	Volume	Volume Units	Concentration	Concentration Units	Decay Date
241-C-107	238Pu	Total	6.81E+01	Ci	C							Jan 1 2001 12:00AM
241-C-107	238Pu	Sludge	3.70E+01	Ci	C		g/mL	511	kL	4.67E-02	uCi/g	Jan 1 2001 12:00AM
241-C-107	238Pu	Sludge	6.52E+00	Ci	C		g/mL	90	kL	4.67E-02	uCi/g	Jan 1 2001 12:00AM
241-C-107	238Pu	Sludge	2.46E+01	Ci	C		g/mL	339	kL	4.67E-02	uCi/g	Jan 1 2001 12:00AM
241-C-107	238U	Total	3.10E+00	Ci	E							Jan 1 2001 12:00AM
241-C-107	238U	Sludge	2.03E+00	Ci	E	1.55	g/mL	511	kL	2.56E-03	uCi/g	Jan 1 2001 12:00AM
241-C-107	238U	Sludge	5.91E-01	Ci	E	1.55	g/mL	90	kL	4.24E-03	uCi/g	Jan 1 2001 12:00AM
241-C-107	238U	Sludge	4.81E-01	Ci	E	1.55	g/mL	339	kL	9.15E-04	uCi/g	Jan 1 2001 12:00AM
241-C-107	239/240Pu	Sludge	9.20E+02	Ci	S	1.55	g/mL	339	kL	1.75E+00	uCi/g	Jan 1 2001 12:00AM
241-C-107	239/240Pu	Sludge	1.39E+03	Ci	S	1.55	g/mL	511	kL	1.75E+00	uCi/g	Jan 1 2001 12:00AM
241-C-107	239/240Pu	Total	2.55E+03	Ci	S							Jan 1 2001 12:00AM
241-C-107	239/240Pu	Sludge	2.44E+02	Ci	S	1.55	g/mL	90	kL	1.75E+00	uCi/g	Jan 1 2001 12:00AM
241-C-107	239Pu	Sludge	7.79E+02	Ci	C		g/mL	339	kL	1.48E+00	uCi/g	Jan 1 2001 12:00AM
241-C-107	239Pu	Total	2.16E+03	Ci	C							Jan 1 2001 12:00AM
241-C-107	239Pu	Sludge	1.17E+03	Ci	C		g/mL	511	kL	1.48E+00	uCi/g	Jan 1 2001 12:00AM
241-C-107	239Pu	Sludge	2.07E+02	Ci	C		g/mL	90	kL	1.48E+00	uCi/g	Jan 1 2001 12:00AM
241-C-107	240Pu	Total	3.93E+02	Ci	C							Jan 1 2001 12:00AM
241-C-107	240Pu	Sludge	2.14E+02	Ci	C		g/mL	511	kL	2.70E-01	uCi/g	Jan 1 2001 12:00AM
241-C-107	240Pu	Sludge	3.77E+01	Ci	C		g/mL	90	kL	2.70E-01	uCi/g	Jan 1 2001 12:00AM
241-C-107	240Pu	Sludge	1.42E+02	Ci	C		g/mL	339	kL	2.70E-01	uCi/g	Jan 1 2001 12:00AM
241-C-107	241Am	Total	6.75E+03	Ci	S							Jan 1 2001 12:00AM
241-C-107	241Am	Sludge	3.67E+03	Ci	S	1.55	g/mL	511	kL	4.63E+00	uCi/g	Jan 1 2001 12:00AM
241-C-107	241Am	Sludge	6.46E+02	Ci	S	1.55	g/mL	90	kL	4.63E+00	uCi/g	Jan 1 2001 12:00AM
241-C-107	241Am	Sludge	2.43E+03	Ci	S	1.55	g/mL	339	kL	4.63E+00	uCi/g	Jan 1 2001 12:00AM
241-C-107	241Pu	Total	3.73E+03	Ci	C							Jan 1 2001 12:00AM
241-C-107	241Pu	Sludge	2.03E+03	Ci	C		g/mL	511	kL	2.56E+00	uCi/g	Jan 1 2001 12:00AM
241-C-107	241Pu	Sludge	3.57E+02	Ci	C		g/mL	90	kL	2.56E+00	uCi/g	Jan 1 2001 12:00AM
241-C-107	241Pu	Sludge	1.35E+03	Ci	C		g/mL	339	kL	2.56E+00	uCi/g	Jan 1 2001 12:00AM
241-C-107	242Cm	Total	5.37E+00	Ci	C							Jan 1 2001 12:00AM
241-C-107	242Cm	Sludge	2.92E+00	Ci	C		g/mL	511	kL	3.69E-03	uCi/g	Jan 1 2001 12:00AM
241-C-107	242Cm	Sludge	5.14E-01	Ci	C		g/mL	90	kL	3.69E-03	uCi/g	Jan 1 2001 12:00AM
241-C-107	242Cm	Sludge	1.94E+00	Ci	C		g/mL	339	kL	3.69E-03	uCi/g	Jan 1 2001 12:00AM
241-C-107	242Pu	Total	2.74E-02	Ci	C							Jan 1 2001 12:00AM
241-C-107	242Pu	Sludge	1.49E-02	Ci	C		g/mL	511	kL	1.88E-05	uCi/g	Jan 1 2001 12:00AM
241-C-107	242Pu	Sludge	2.62E-03	Ci	C		g/mL	90	kL	1.88E-05	uCi/g	Jan 1 2001 12:00AM
241-C-107	242Pu	Sludge	9.87E-03	Ci	C		g/mL	339	kL	1.88E-05	uCi/g	Jan 1 2001 12:00AM
241-C-107	243Am	Total	3.47E-01	Ci	C							Jan 1 2001 12:00AM
241-C-107	243Am	Sludge	1.89E-01	Ci	C		g/mL	511	kL	2.38E-04	uCi/g	Jan 1 2001 12:00AM
241-C-107	243Am	Sludge	3.32E-02	Ci	C		g/mL	90	kL	2.38E-04	uCi/g	Jan 1 2001 12:00AM
241-C-107	243Am	Sludge	1.25E-01	Ci	C		g/mL	339	kL	2.38E-04	uCi/g	Jan 1 2001 12:00AM
241-C-107	243Cm	Total	4.21E-01	Ci	C							Jan 1 2001 12:00AM
241-C-107	243Cm	Sludge	2.29E-01	Ci	C		g/mL	511	kL	2.89E-04	uCi/g	Jan 1 2001 12:00AM
241-C-107	243Cm	Sludge	4.03E-02	Ci	C		g/mL	90	kL	2.89E-04	uCi/g	Jan 1 2001 12:00AM
241-C-107	243Cm	Sludge	1.52E-01	Ci	C		g/mL	339	kL	2.89E-04	uCi/g	Jan 1 2001 12:00AM
241-C-107	244Cm	Sludge	8.46E+00	Ci	C		g/mL	511	kL	1.07E-02	uCi/g	Jan 1 2001 12:00AM
241-C-107	244Cm	Sludge	1.49E+00	Ci	C		g/mL	90	kL	1.07E-02	uCi/g	Jan 1 2001 12:00AM
241-C-107	244Cm	Sludge	5.61E+00	Ci	C		g/mL	339	kL	1.07E-02	uCi/g	Jan 1 2001 12:00AM

CALCULATION SHEET

PROJECT: BPP-WTP
JOB NO.: 24590
CALC NO.: 24590-WTP-MMC-FRP-00001
SHEET REV: 0A
SHEET NO.: 132

BY: E. Barrios
DATE: 12/04/02

SUBJECT: Updated Emissions Run Feed Vector

Tank Name	Analyte	Waste Phase	Inventory	Inventory Units	Basis	Density	Density Units	Volume	Volume Units	Concentration	Concentration Units	Decay Date
241-C-107	244Cm	Total	1.56E+01	Ci	C							Jan 1 2001 12:00AM
241-C-107	3H	Total	2.99E+01	Ci	E							Jan 1 2001 12:00AM
241-C-107	3H	Sludge	3.10E-01	Ci	TS	1.41	g/mL	511	kL	4.30E-04	uCi/g	Jan 1 2001 12:00AM
241-C-107	3H	Sludge	3.70E-02	Ci	TS	1.71	g/mL	90	kL	2.40E-04	uCi/g	Jan 1 2001 12:00AM
241-C-107	3H	Sludge	2.95E+01	Ci	TE	1.32	g/mL	339	kL	6.60E-02	uCi/g	Jan 1 2001 12:00AM
241-C-107	59Ni	Total	3.22E+02	Ci	E							Jan 1 2001 12:00AM
241-C-107	59Ni	Sludge	2.77E-02	Ci	TS	1.41	g/mL	511	kL	3.85E-05	uCi/g	Jan 1 2001 12:00AM
241-C-107	59Ni	Sludge	2.17E-03	Ci	TS	1.71	g/mL	90	kL	1.41E-05	uCi/g	Jan 1 2001 12:00AM
241-C-107	59Ni	Sludge	3.22E+02	Ci	TE	1.32	g/mL	339	kL	7.19E-01	uCi/g	Jan 1 2001 12:00AM
241-C-107	60Co	Total	2.47E+02	Ci	E							Jan 1 2001 12:00AM
241-C-107	60Co	Sludge	8.55E-03	Ci	TS	1.41	g/mL	511	kL	1.19E-05	uCi/g	Jan 1 2001 12:00AM
241-C-107	60Co	Sludge	4.45E-03	Ci	TS	1.71	g/mL	90	kL	2.89E-05	uCi/g	Jan 1 2001 12:00AM
241-C-107	60Co	Sludge	2.47E+02	Ci	E	1.55	g/mL	339	kL	4.71E-01	uCi/g	Jan 1 2001 12:00AM
241-C-107	63Ni	Total	3.01E+04	Ci	E							Jan 1 2001 12:00AM
241-C-107	63Ni	Sludge	2.37E+00	Ci	TS	1.41	g/mL	511	kL	3.29E-03	uCi/g	Jan 1 2001 12:00AM
241-C-107	63Ni	Sludge	2.07E-01	Ci	TS	1.71	g/mL	90	kL	1.35E-03	uCi/g	Jan 1 2001 12:00AM
241-C-107	63Ni	Sludge	3.01E+04	Ci	TE	1.32	g/mL	339	kL	6.72E+01	uCi/g	Jan 1 2001 12:00AM
241-C-107	79Se	Total	1.79E+01	Ci	E							Jan 1 2001 12:00AM
241-C-107	79Se	Sludge	2.06E-03	Ci	TS	1.41	g/mL	511	kL	2.86E-06	uCi/g	Jan 1 2001 12:00AM
241-C-107	79Se	Sludge	1.71E-04	Ci	TS	1.71	g/mL	90	kL	1.11E-06	uCi/g	Jan 1 2001 12:00AM
241-C-107	79Se	Sludge	1.79E+01	Ci	TE	1.32	g/mL	339	kL	4.01E-02	uCi/g	Jan 1 2001 12:00AM
241-C-107	90Sr	Total	2.24E+06	Ci	S							Jan 1 2001 12:00AM
241-C-107	90Sr	Sludge	3.69E+05	Ci	S	1.55	g/mL	511	kL	4.66E+02	uCi/g	Jan 1 2001 12:00AM
241-C-107	90Sr	Sludge	6.50E+04	Ci	S	1.55	g/mL	90	kL	4.66E+02	uCi/g	Jan 1 2001 12:00AM
241-C-107	90Sr	Sludge	1.81E+06	Ci	S	1.55	g/mL	339	kL	3.44E+03	uCi/g	Jan 1 2001 12:00AM
241-C-107	90Y	Total	2.24E+06	Ci	C							Jan 1 2001 12:00AM
241-C-107	90Y	Sludge	3.69E+05	Ci	C		g/mL	511	kL	4.66E+02	uCi/g	Jan 1 2001 12:00AM
241-C-107	90Y	Sludge	6.50E+04	Ci	C		g/mL	90	kL	4.66E+02	uCi/g	Jan 1 2001 12:00AM
241-C-107	90Y	Sludge	1.81E+06	Ci	C		g/mL	339	kL	3.44E+03	uCi/g	Jan 1 2001 12:00AM
241-C-107	93mNb	Total	6.98E+02	Ci	E							Jan 1 2001 12:00AM
241-C-107	93mNb	Sludge	8.72E-02	Ci	TS	1.41	g/mL	511	kL	1.21E-04	uCi/g	Jan 1 2001 12:00AM
241-C-107	93mNb	Sludge	6.52E-03	Ci	TS	1.71	g/mL	90	kL	4.24E-05	uCi/g	Jan 1 2001 12:00AM
241-C-107	93mNb	Sludge	6.98E+02	Ci	TE	1.32	g/mL	339	kL	1.56E+00	uCi/g	Jan 1 2001 12:00AM
241-C-107	93Zr	Sludge	8.04E-03	Ci	TS	1.71	g/mL	90	kL	5.22E-05	uCi/g	Jan 1 2001 12:00AM
241-C-107	93Zr	Sludge	7.75E+02	Ci	TE	1.32	g/mL	339	kL	1.73E+00	uCi/g	Jan 1 2001 12:00AM
241-C-107	93Zr	Total	7.75E+02	Ci	E							Jan 1 2001 12:00AM
241-C-107	93Zr	Sludge	9.78E-02	Ci	TS	1.41	g/mL	511	kL	1.36E-04	uCi/g	Jan 1 2001 12:00AM
241-C-107	99Tc	Total	3.79E+01	Ci	S							Jan 1 2001 12:00AM
241-C-107	99Tc	Sludge	2.06E+01	Ci	S	1.55	g/mL	511	kL	2.60E-02	uCi/g	Jan 1 2001 12:00AM
241-C-107	99Tc	Sludge	3.63E+00	Ci	S	1.55	g/mL	90	kL	2.60E-02	uCi/g	Jan 1 2001 12:00AM
241-C-107	99Tc	Sludge	1.37E+01	Ci	S	1.55	g/mL	339	kL	2.60E-02	uCi/g	Jan 1 2001 12:00AM
241-C-107	Ag	Total	2.94E+02	kg	S							Jan 1 2001 12:00AM
241-C-107	Ag	Sludge	7.83E+01	kg	S	1.55	g/mL	511	kL	9.89E+01	ug/g	Jan 1 2001 12:00AM
241-C-107	Ag	Sludge	1.89E+02	kg	S	1.55	g/mL	339	kL	3.60E+02	ug/g	Jan 1 2001 12:00AM
241-C-107	Ag	Sludge	2.64E+01	kg	S	1.55	g/mL	90	kL	1.89E+02	ug/g	Jan 1 2001 12:00AM
241-C-107	Al	Total	5.86E+04	kg	S							Jan 1 2001 12:00AM
241-C-107	Al	Sludge	1.90E+04	kg	S	1.55	g/mL	511	kL	2.41E+04	ug/g	Jan 1 2001 12:00AM

CALCULATION SHEET

PROJECT: RPP-WTP
JOB NO.: 24590
CALC NO.: 24590-WTP-MMC-FRP-00001
SHEET REV: 0A
SHEET NO.: 133

BY: E. Barrios
DATE: 12/04/02

SUBJECT: Updated Emissions Run Feed Vector

Tank Name	Analyte	Waste Phase	Inventory	Inventory Units	Basis	Density	Density Units	Volume	Volume Units	Concentration	Concentration Units	Decay Date
241-C-107	Al	Sludge	1.66E+04	kg	S	1.55	g/mL	90	kL	1.19E+05	ug/g	Jan 1 2001 12:00AM
241-C-107	Al	Sludge	2.29E+04	kg	S	1.55	g/mL	339	kL	4.37E+04	ug/g	Jan 1 2001 12:00AM
241-C-107	As	Sludge	5.41E+00	kg	S	1.55	g/mL	511	kL	6.83E+00	ug/g	Jan 1 2001 12:00AM
241-C-107	As	Sludge	3.59E+00	kg	S	1.55	g/mL	339	kL	6.83E+00	ug/g	Jan 1 2001 12:00AM
241-C-107	As	Total	9.95E+00	kg	S							Jan 1 2001 12:00AM
241-C-107	As	Sludge	9.53E-01	kg	S	1.55	g/mL	90	kL	6.83E+00	ug/g	Jan 1 2001 12:00AM
241-C-107	B	Sludge	1.06E+00	kg	S	1.55	g/mL	90	kL	7.60E+00	ug/g	Jan 1 2001 12:00AM
241-C-107	B	Sludge	1.81E+02	kg	S	1.55	g/mL	511	kL	2.28E+02	ug/g	Jan 1 2001 12:00AM
241-C-107	B	Total	2.08E+02	kg	S/E							Jan 1 2001 12:00AM
241-C-107	B	Sludge	2.59E+01	kg	S	1.55	g/mL	339	kL	4.94E+01	ug/g	Jan 1 2001 12:00AM
241-C-107	Ba	Sludge	1.53E+01	kg	S	1.55	g/mL	90	kL	1.10E+02	ug/g	Jan 1 2001 12:00AM
241-C-107	Ba	Sludge	4.49E+02	kg	S	1.55	g/mL	339	kL	8.55E+02	ug/g	Jan 1 2001 12:00AM
241-C-107	Ba	Total	7.29E+02	kg	S							Jan 1 2001 12:00AM
241-C-107	Ba	Sludge	2.64E+02	kg	S	1.55	g/mL	511	kL	3.34E+02	ug/g	Jan 1 2001 12:00AM
241-C-107	Be	Sludge	8.50E-01	kg	S	1.55	g/mL	511	kL	1.07E+00	ug/g	Jan 1 2001 12:00AM
241-C-107	Be	Sludge	1.50E-01	kg	S	1.55	g/mL	90	kL	1.07E+00	ug/g	Jan 1 2001 12:00AM
241-C-107	Be	Sludge	5.64E-01	kg	S	1.55	g/mL	339	kL	1.07E+00	ug/g	Jan 1 2001 12:00AM
241-C-107	Be	Total	1.56E+00	kg	S							Jan 1 2001 12:00AM
241-C-107	Bi	Total	1.04E+04	kg	S							Jan 1 2001 12:00AM
241-C-107	Bi	Sludge	9.88E+03	kg	S	1.55	g/mL	511	kL	1.25E+04	ug/g	Jan 1 2001 12:00AM
241-C-107	Bi	Sludge	4.89E+02	kg	S	1.55	g/mL	90	kL	3.50E+03	ug/g	Jan 1 2001 12:00AM
241-C-107	Bi	Sludge	5.27E+01	kg	S	1.55	g/mL	339	kL	1.00E+02	ug/g	Jan 1 2001 12:00AM
241-C-107	Ca	Total	1.24E+03	kg	S							Jan 1 2001 12:00AM
241-C-107	Ca	Sludge	4.84E+02	kg	S	1.55	g/mL	511	kL	6.11E+02	ug/g	Jan 1 2001 12:00AM
241-C-107	Ca	Sludge	8.49E+01	kg	S	1.55	g/mL	90	kL	6.09E+02	ug/g	Jan 1 2001 12:00AM
241-C-107	Ca	Sludge	6.73E+02	kg	S	1.55	g/mL	339	kL	1.28E+03	ug/g	Jan 1 2001 12:00AM
241-C-107	Cd	Sludge	1.29E+00	kg	S	1.55	g/mL	90	kL	9.24E+00	ug/g	Jan 1 2001 12:00AM
241-C-107	Cd	Total	9.52E+01	kg	S							Jan 1 2001 12:00AM
241-C-107	Cd	Sludge	3.26E+01	kg	S	1.55	g/mL	511	kL	4.11E+01	ug/g	Jan 1 2001 12:00AM
241-C-107	Cd	Sludge	6.13E+01	kg	S	1.55	g/mL	339	kL	1.17E+02	ug/g	Jan 1 2001 12:00AM
241-C-107	Ce	Sludge	4.07E+01	kg	S	1.55	g/mL	90	kL	2.92E+02	ug/g	Jan 1 2001 12:00AM
241-C-107	Ce	Total	7.79E+02	kg	S							Jan 1 2001 12:00AM
241-C-107	Ce	Sludge	3.14E+02	kg	S	1.55	g/mL	511	kL	3.97E+02	ug/g	Jan 1 2001 12:00AM
241-C-107	Ce	Sludge	4.24E+02	kg	S	1.55	g/mL	339	kL	8.07E+02	ug/g	Jan 1 2001 12:00AM
241-C-107	Cl	Total	8.70E+02	kg	S							Jan 1 2001 12:00AM
241-C-107	Cl	Sludge	5.76E+02	kg	S	1.55	g/mL	511	kL	7.28E+02	ug/g	Jan 1 2001 12:00AM
241-C-107	Cl	Sludge	5.95E+01	kg	S	1.55	g/mL	90	kL	4.27E+02	ug/g	Jan 1 2001 12:00AM
241-C-107	Cl	Sludge	2.34E+02	kg	S	1.55	g/mL	339	kL	4.45E+02	ug/g	Jan 1 2001 12:00AM
241-C-107	CN	Sludge	5.85E-01	kg	S	1.55	g/mL	90	kL	4.19E+00	ug/g	Jan 1 2001 12:00AM
241-C-107	CN	Sludge	2.20E+00	kg	S	1.55	g/mL	339	kL	4.19E+00	ug/g	Jan 1 2001 12:00AM
241-C-107	CN	Sludge	3.32E+00	kg	S	1.55	g/mL	511	kL	4.19E+00	ug/g	Jan 1 2001 12:00AM
241-C-107	CN	Total	6.11E+00	kg	S/E							Jan 1 2001 12:00AM
241-C-107	Co	Sludge	1.08E+01	kg	S	1.55	g/mL	511	kL	1.36E+01	ug/g	Jan 1 2001 12:00AM
241-C-107	Co	Sludge	1.07E+00	kg	S	1.55	g/mL	90	kL	7.70E+00	ug/g	Jan 1 2001 12:00AM
241-C-107	Co	Total	2.65E+01	kg	S							Jan 1 2001 12:00AM
241-C-107	Co	Sludge	1.46E+01	kg	S	1.55	g/mL	339	kL	2.78E+01	ug/g	Jan 1 2001 12:00AM
241-C-107	Cr	Total	9.30E+02	kg	S							Jan 1 2001 12:00AM

CALCULATION SHEET

PROJECT: RPP-WTP
JOB NO.: 24590
CALC NO.: 24590-WTP-M4C-FRP-00001
SHEET REV: 0A
SHEET NO.: 134

BY: E. Berrios
DATE: 12/04/02

SUBJECT: Updated Emissions Run Feed Vector

Tank Name	Analyte	Waste Phase	Inventory	Inventory Units	Basis	Density	Density Units	Volume	Volume Units	Concentration	Concentration Units	Decay Date
241-C-107	Cr	Sludge	5.33E+02	kg	S	1.55	g/mL	511	kL	6.73E+02	ug/g	Jan 1 2001 12:00AM
241-C-107	Cr	Sludge	3.65E+01	kg	S	1.55	g/mL	90	kL	2.62E+02	ug/g	Jan 1 2001 12:00AM
241-C-107	Cr	Sludge	3.61E+02	kg	S	1.55	g/mL	339	kL	6.87E+02	ug/g	Jan 1 2001 12:00AM
241-C-107	Cu	Sludge	1.76E+01	kg	S	1.55	g/mL	90	kL	1.26E+02	ug/g	Jan 1 2001 12:00AM
241-C-107	Cu	Total	2.28E+02	kg	S							Jan 1 2001 12:00AM
241-C-107	Cu	Sludge	8.43E+01	kg	S	1.55	g/mL	511	kL	1.06E+02	ug/g	Jan 1 2001 12:00AM
241-C-107	Cu	Sludge	1.27E+02	kg	S	1.55	g/mL	339	kL	2.41E+02	ug/g	Jan 1 2001 12:00AM
241-C-107	F	Total	6.39E+03	kg	S							Jan 1 2001 12:00AM
241-C-107	F	Sludge	5.82E+03	kg	S	1.55	g/mL	511	kL	7.35E+03	ug/g	Jan 1 2001 12:00AM
241-C-107	F	Sludge	3.19E+02	kg	S	1.55	g/mL	339	kL	6.07E+02	ug/g	Jan 1 2001 12:00AM
241-C-107	F	Sludge	2.52E+02	kg	S	1.55	g/mL	90	kL	1.80E+03	ug/g	Jan 1 2001 12:00AM
241-C-107	Fe	Total	1.03E+05	kg	S							Jan 1 2001 12:00AM
241-C-107	Fe	Sludge	4.20E+04	kg	S	1.55	g/mL	511	kL	5.31E+04	ug/g	Jan 1 2001 12:00AM
241-C-107	Fe	Sludge	2.86E+03	kg	S	1.55	g/mL	90	kL	2.05E+04	ug/g	Jan 1 2001 12:00AM
241-C-107	Fe	Sludge	5.79E+04	kg	S	1.55	g/mL	339	kL	1.10E+05	ug/g	Jan 1 2001 12:00AM
241-C-107	Hg	Total	6.70E+01	kg	S							Jan 1 2001 12:00AM
241-C-107	Hg	Sludge	3.64E+01	kg	S	1.55	g/mL	511	kL	4.60E+01	ug/g	Jan 1 2001 12:00AM
241-C-107	Hg	Sludge	6.41E+00	kg	S	1.55	g/mL	90	kL	4.60E+01	ug/g	Jan 1 2001 12:00AM
241-C-107	Hg	Sludge	2.41E+01	kg	S	1.55	g/mL	339	kL	4.60E+01	ug/g	Jan 1 2001 12:00AM
241-C-107	K	Total	4.47E+02	kg	S/E							Jan 1 2001 12:00AM
241-C-107	K	Sludge	2.48E+02	kg	S	1.55	g/mL	511	kL	3.13E+02	ug/g	Jan 1 2001 12:00AM
241-C-107	K	Sludge	2.63E+01	kg	S	1.55	g/mL	90	kL	1.88E+02	ug/g	Jan 1 2001 12:00AM
241-C-107	K	Sludge	1.73E+02	kg	E	1.55	g/mL	339	kL	3.29E+02	ug/g	Jan 1 2001 12:00AM
241-C-107	La	Total	2.70E+02	kg	S							Jan 1 2001 12:00AM
241-C-107	La	Sludge	9.95E+01	kg	S	1.55	g/mL	511	kL	1.26E+02	ug/g	Jan 1 2001 12:00AM
241-C-107	La	Sludge	1.73E+01	kg	S	1.55	g/mL	90	kL	1.24E+02	ug/g	Jan 1 2001 12:00AM
241-C-107	La	Sludge	1.53E+02	kg	S	1.55	g/mL	339	kL	2.92E+02	ug/g	Jan 1 2001 12:00AM
241-C-107	Li	Total	1.67E+02	kg	S							Jan 1 2001 12:00AM
241-C-107	Li	Sludge	1.96E+01	kg	S	1.55	g/mL	339	kL	3.73E+01	ug/g	Jan 1 2001 12:00AM
241-C-107	Li	Sludge	1.32E+02	kg	S	1.55	g/mL	511	kL	1.67E+02	ug/g	Jan 1 2001 12:00AM
241-C-107	Li	Sludge	1.46E+01	kg	S	1.55	g/mL	90	kL	1.05E+02	ug/g	Jan 1 2001 12:00AM
241-C-107	Mg	Total	4.77E+02	kg	S							Jan 1 2001 12:00AM
241-C-107	Mg	Sludge	3.53E+01	kg	S	1.55	g/mL	90	kL	2.53E+02	ug/g	Jan 1 2001 12:00AM
241-C-107	Mg	Sludge	2.08E+02	kg	S	1.55	g/mL	339	kL	3.96E+02	ug/g	Jan 1 2001 12:00AM
241-C-107	Mg	Sludge	2.33E+02	kg	S	1.55	g/mL	511	kL	2.95E+02	ug/g	Jan 1 2001 12:00AM
241-C-107	Mn	Total	5.02E+03	kg	S							Jan 1 2001 12:00AM
241-C-107	Mn	Sludge	1.85E+03	kg	S	1.55	g/mL	511	kL	2.34E+03	ug/g	Jan 1 2001 12:00AM
241-C-107	Mn	Sludge	2.20E+02	kg	S	1.55	g/mL	90	kL	1.58E+03	ug/g	Jan 1 2001 12:00AM
241-C-107	Mn	Sludge	2.95E+03	kg	S	1.55	g/mL	339	kL	5.62E+03	ug/g	Jan 1 2001 12:00AM
241-C-107	Mo	Total	4.58E+01	kg	S/E							Jan 1 2001 12:00AM
241-C-107	Mo	Sludge	2.63E+00	kg	S	1.55	g/mL	90	kL	1.88E+01	ug/g	Jan 1 2001 12:00AM
241-C-107	Mo	Sludge	2.28E+01	kg	S	1.55	g/mL	339	kL	4.34E+01	ug/g	Jan 1 2001 12:00AM
241-C-107	Mo	Sludge	2.03E+01	kg	S	1.55	g/mL	511	kL	2.56E+01	ug/g	Jan 1 2001 12:00AM
241-C-107	Na	Total	9.52E+04	kg	S							Jan 1 2001 12:00AM
241-C-107	Na	Sludge	5.90E+04	kg	S	1.55	g/mL	511	kL	7.45E+04	ug/g	Jan 1 2001 12:00AM
241-C-107	Na	Sludge	7.97E+03	kg	S	1.55	g/mL	90	kL	5.71E+04	ug/g	Jan 1 2001 12:00AM
241-C-107	Na	Sludge	2.83E+04	kg	S	1.55	g/mL	339	kL	5.38E+04	ug/g	Jan 1 2001 12:00AM

CALCULATION SHEET

PROJECT: BPP-WTP
JOB NO.: 24590
CALC NO.: 24590-WTP-MHC-FBP-00001
SHEET REV: 06
SHEET NO.: 135

BY: E. Berrios
DATE: 12/04/02

SUBJECT: Upgraded Emissions Run Feed Vector

Tank Name	Analyte	Waste Phase	Inventory	Inventory Units	Basis	Density	Density Units	Volume	Volume Units	Concentration	Concentration Units	Decay Date
241-C-107	Nd	Sludge	3.65E+02	kg	S	1.55	g/mL	339	kL	6.95E+02	ug/g	Jan 1 2001 12:00AM
241-C-107	Nd	Sludge	2.31E+02	kg	S	1.55	g/mL	511	kL	2.94E+02	ug/g	Jan 1 2001 12:00AM
241-C-107	Nd	Total	6.33E+02	kg	S							Jan 1 2001 12:00AM
241-C-107	Nd	Sludge	3.46E+01	kg	S	1.55	g/mL	90	kL	2.48E+02	ug/g	Jan 1 2001 12:00AM
241-C-107	Ni	Total	3.09E+03	kg	S							Jan 1 2001 12:00AM
241-C-107	Ni	Sludge	9.45E+02	kg	S	1.55	g/mL	511	kL	1.19E+03	ug/g	Jan 1 2001 12:00AM
241-C-107	Ni	Sludge	6.56E+02	kg	S	1.55	g/mL	90	kL	4.70E+03	ug/g	Jan 1 2001 12:00AM
241-C-107	Ni	Sludge	1.49E+03	kg	S	1.55	g/mL	339	kL	2.84E+03	ug/g	Jan 1 2001 12:00AM
241-C-107	NO2	Total	3.53E+04	kg	S							Jan 1 2001 12:00AM
241-C-107	NO2	Sludge	2.07E+04	kg	S	1.55	g/mL	511	kL	2.61E+04	ug/g	Jan 1 2001 12:00AM
241-C-107	NO2	Sludge	2.61E+03	kg	S	1.55	g/mL	90	kL	1.87E+04	ug/g	Jan 1 2001 12:00AM
241-C-107	NO2	Sludge	1.21E+04	kg	S	1.55	g/mL	339	kL	2.29E+04	ug/g	Jan 1 2001 12:00AM
241-C-107	NO3	Total	4.78E+04	kg	S							Jan 1 2001 12:00AM
241-C-107	NO3	Sludge	3.45E+04	kg	S	1.55	g/mL	511	kL	4.36E+04	ug/g	Jan 1 2001 12:00AM
241-C-107	NO3	Sludge	3.24E+03	kg	S	1.55	g/mL	90	kL	2.32E+04	ug/g	Jan 1 2001 12:00AM
241-C-107	NO3	Sludge	1.00E+04	kg	S	1.55	g/mL	339	kL	1.91E+04	ug/g	Jan 1 2001 12:00AM
241-C-107	OH	Total	2.29E+05	kg	C							Jan 1 2001 12:00AM
241-C-107	Pb	Total	1.01E+04	kg	S							Jan 1 2001 12:00AM
241-C-107	Pb	Sludge	3.48E+03	kg	S	1.55	g/mL	511	kL	4.40E+03	ug/g	Jan 1 2001 12:00AM
241-C-107	Pb	Sludge	1.68E+03	kg	S	1.55	g/mL	90	kL	1.21E+04	ug/g	Jan 1 2001 12:00AM
241-C-107	Pb	Sludge	4.96E+03	kg	S	1.55	g/mL	339	kL	9.44E+03	ug/g	Jan 1 2001 12:00AM
241-C-107	PO4	Total	5.88E+04	kg	S							Jan 1 2001 12:00AM
241-C-107	PO4	Sludge	4.55E+04	kg	S	1.55	g/mL	511	kL	5.75E+04	ug/g	Jan 1 2001 12:00AM
241-C-107	PO4	Sludge	8.34E+03	kg	S	1.55	g/mL	90	kL	5.98E+04	ug/g	Jan 1 2001 12:00AM
241-C-107	PO4	Sludge	4.95E+03	kg	S	1.55	g/mL	339	kL	9.42E+03	ug/g	Jan 1 2001 12:00AM
241-C-107	Pr	Sludge	1.13E+02	kg	S	1.55	g/mL	511	kL	1.43E+02	ug/g	Jan 1 2001 12:00AM
241-C-107	Pr	Sludge	1.99E+01	kg	S	1.55	g/mL	90	kL	1.43E+02	ug/g	Jan 1 2001 12:00AM
241-C-107	Pr	Sludge	7.50E+01	kg	S	1.55	g/mL	339	kL	1.43E+02	ug/g	Jan 1 2001 12:00AM
241-C-107	Pr	Total	2.08E+02	kg	S							Jan 1 2001 12:00AM
241-C-107	Rb	Sludge	8.07E-02	kg	S	1.55	g/mL	90	kL	5.79E-01	ug/g	Jan 1 2001 12:00AM
241-C-107	Rb	Sludge	3.04E-01	kg	S	1.55	g/mL	339	kL	5.79E-01	ug/g	Jan 1 2001 12:00AM
241-C-107	Rb	Sludge	4.58E-01	kg	S	1.55	g/mL	511	kL	5.79E-01	ug/g	Jan 1 2001 12:00AM
241-C-107	Rb	Total	8.43E-01	kg	S							Jan 1 2001 12:00AM
241-C-107	Rh	Sludge	2.37E+01	kg	S	1.55	g/mL	511	kL	2.99E+01	ug/g	Jan 1 2001 12:00AM
241-C-107	Rh	Total	4.36E+01	kg	S							Jan 1 2001 12:00AM
241-C-107	Rh	Sludge	1.57E+01	kg	S	1.55	g/mL	339	kL	2.99E+01	ug/g	Jan 1 2001 12:00AM
241-C-107	Rh	Sludge	4.17E+00	kg	S	1.55	g/mL	90	kL	2.99E+01	ug/g	Jan 1 2001 12:00AM
241-C-107	Ru	Sludge	3.43E+02	kg	S	1.55	g/mL	339	kL	6.53E+02	ug/g	Jan 1 2001 12:00AM
241-C-107	Ru	Sludge	5.17E+02	kg	S	1.55	g/mL	511	kL	6.53E+02	ug/g	Jan 1 2001 12:00AM
241-C-107	Ru	Sludge	9.10E+01	kg	S	1.55	g/mL	90	kL	6.53E+02	ug/g	Jan 1 2001 12:00AM
241-C-107	Ru	Total	9.51E+02	kg	S							Jan 1 2001 12:00AM
241-C-107	Sb	Sludge	1.31E+00	kg	S	1.55	g/mL	511	kL	1.65E+00	ug/g	Jan 1 2001 12:00AM
241-C-107	Sb	Sludge	8.68E-01	kg	S	1.55	g/mL	339	kL	1.65E+00	ug/g	Jan 1 2001 12:00AM
241-C-107	Sb	Total	2.41E+00	kg	S							Jan 1 2001 12:00AM
241-C-107	Sb	Sludge	2.31E-01	kg	S	1.55	g/mL	90	kL	1.65E+00	ug/g	Jan 1 2001 12:00AM
241-C-107	Se	Sludge	4.80E-01	kg	S	1.55	g/mL	90	kL	3.44E+00	ug/g	Jan 1 2001 12:00AM
241-C-107	Se	Total	5.01E+00	kg	S							Jan 1 2001 12:00AM

CALCULATION SHEET

PROJECT: BPP-WTP
JOB NO.: 24590
CALC NO.: 24590-WTP-M4C-FRP-00001
SHEET REV: 0A
SHEET NO.: 138

BY: E. Berrios
DATE: 12/04/02

SUBJECT: Updated Emissions Run Feed Vector

Tank Name	Analyte	Waste Phase	Inventory	Inventory Units	Basis	Density	Density Units	Volume	Volume Units	Concentration	Concentration Units	Decay Date
241-C-107	Se	Sludge	2.73E+00	kg	S	1.55	g/mL	511	kL	3.44E+00	ug/g	Jan 1 2001 12:00AM
241-C-107	Se	Sludge	1.81E+00	kg	S	1.55	g/mL	339	kL	3.44E+00	ug/g	Jan 1 2001 12:00AM
241-C-107	Si	Total	1.87E+03	kg	S							Jan 1 2001 12:00AM
241-C-107	Si	Sludge	9.85E+02	kg	S	1.55	g/mL	511	kL	1.24E+03	ug/g	Jan 1 2001 12:00AM
241-C-107	Si	Sludge	1.24E+02	kg	S	1.55	g/mL	90	kL	8.86E+02	ug/g	Jan 1 2001 12:00AM
241-C-107	Si	Sludge	7.58E+02	kg	S	1.55	g/mL	339	kL	1.44E+03	ug/g	Jan 1 2001 12:00AM
241-C-107	SO4	Total	8.43E+03	kg	S							Jan 1 2001 12:00AM
241-C-107	SO4	Sludge	4.97E+03	kg	S	1.55	g/mL	511	kL	6.27E+03	ug/g	Jan 1 2001 12:00AM
241-C-107	SO4	Sludge	5.06E+02	kg	S	1.55	g/mL	90	kL	3.63E+03	ug/g	Jan 1 2001 12:00AM
241-C-107	SO4	Sludge	2.95E+03	kg	S	1.55	g/mL	339	kL	5.61E+03	ug/g	Jan 1 2001 12:00AM
241-C-107	Sr	Total	2.57E+02	kg	S							Jan 1 2001 12:00AM
241-C-107	Sr	Sludge	1.65E+02	kg	S	1.55	g/mL	511	kL	2.08E+02	ug/g	Jan 1 2001 12:00AM
241-C-107	Sr	Sludge	2.45E+01	kg	S	1.55	g/mL	90	kL	1.75E+02	ug/g	Jan 1 2001 12:00AM
241-C-107	Sr	Sludge	6.84E+01	kg	S	1.55	g/mL	339	kL	1.30E+02	ug/g	Jan 1 2001 12:00AM
241-C-107	Ta	Sludge	4.60E-01	kg	S	1.55	g/mL	511	kL	5.81E-01	ug/g	Jan 1 2001 12:00AM
241-C-107	Ta	Sludge	8.11E-02	kg	S	1.55	g/mL	90	kL	5.81E-01	ug/g	Jan 1 2001 12:00AM
241-C-107	Ta	Total	8.47E-01	kg	S/E							Jan 1 2001 12:00AM
241-C-107	Ta	Sludge	3.05E-01	kg	S	1.55	g/mL	339	kL	5.81E-01	ug/g	Jan 1 2001 12:00AM
241-C-107	Te	Sludge	9.76E+01	kg	S	1.55	g/mL	511	kL	1.23E+02	ug/g	Jan 1 2001 12:00AM
241-C-107	Te	Sludge	6.47E+01	kg	S	1.55	g/mL	339	kL	1.23E+02	ug/g	Jan 1 2001 12:00AM
241-C-107	Te	Total	1.80E+02	kg	S							Jan 1 2001 12:00AM
241-C-107	Te	Sludge	1.72E+01	kg	S	1.55	g/mL	90	kL	1.23E+02	ug/g	Jan 1 2001 12:00AM
241-C-107	Th	Sludge	2.39E+02	kg	S	1.55	g/mL	339	kL	4.54E+02	ug/g	Jan 1 2001 12:00AM
241-C-107	Th	Total	6.61E+02	kg	S							Jan 1 2001 12:00AM
241-C-107	Th	Sludge	3.60E+02	kg	S	1.55	g/mL	511	kL	4.54E+02	ug/g	Jan 1 2001 12:00AM
241-C-107	Th	Sludge	6.33E+01	kg	S	1.55	g/mL	90	kL	4.54E+02	ug/g	Jan 1 2001 12:00AM
241-C-107	Ti	Sludge	1.50E+01	kg	S	1.55	g/mL	90	kL	1.08E+02	ug/g	Jan 1 2001 12:00AM
241-C-107	Ti	Sludge	7.16E+01	kg	S	1.55	g/mL	339	kL	1.36E+02	ug/g	Jan 1 2001 12:00AM
241-C-107	Ti	Sludge	3.70E+01	kg	S	1.55	g/mL	511	kL	4.67E+01	ug/g	Jan 1 2001 12:00AM
241-C-107	Ti	Total	1.24E+02	kg	S							Jan 1 2001 12:00AM
241-C-107	TIC as CO3	Sludge	4.12E+03	kg	S	1.55	g/mL	339	kL	7.84E+03	ug/g	Jan 1 2001 12:00AM
241-C-107	TIC as CO3	Total	1.14E+04	kg	S							Jan 1 2001 12:00AM
241-C-107	TIC as CO3	Sludge	6.21E+03	kg	S	1.55	g/mL	511	kL	7.84E+03	ug/g	Jan 1 2001 12:00AM
241-C-107	TIC as CO3	Sludge	1.09E+03	kg	S	1.55	g/mL	90	kL	7.84E+03	ug/g	Jan 1 2001 12:00AM
241-C-107	Tl	Sludge	2.95E+00	kg	S	1.55	g/mL	511	kL	3.73E+00	ug/g	Jan 1 2001 12:00AM
241-C-107	Tl	Total	5.43E+00	kg	S							Jan 1 2001 12:00AM
241-C-107	Tl	Sludge	5.20E-01	kg	S	1.55	g/mL	90	kL	3.73E+00	ug/g	Jan 1 2001 12:00AM
241-C-107	Tl	Sludge	1.96E+00	kg	S	1.55	g/mL	339	kL	3.73E+00	ug/g	Jan 1 2001 12:00AM
241-C-107	TOC	Total	7.36E+02	kg	S							Jan 1 2001 12:00AM
241-C-107	TOC	Sludge	4.00E+02	kg	S	1.55	g/mL	511	kL	5.05E+02	ug/g	Jan 1 2001 12:00AM
241-C-107	TOC	Sludge	7.05E+01	kg	S	1.55	g/mL	90	kL	5.05E+02	ug/g	Jan 1 2001 12:00AM
241-C-107	TOC	Sluige	2.66E+02	kg	S	1.55	g/mL	339	kL	5.05E+02	ug/g	Jan 1 2001 12:00AM
241-C-107	UTOTAL	Total	9.29E+03	kg	S							Jan 1 2001 12:00AM

CALCULATION SHEET

PROJECT: BPP-WTP
JOB NO.: 24590
CALC NO.: 24590-WTP-MKC-FRP-00001
SHEET REV: 06
SHEET NO.: 137

BY: E. Berriss
DATE: 12/06/02

SUBJECT: Updated Emissions Run Feed Vector

Tank Name	Analyte	Waste Phase	Inventory	Inventory Units	Basis	Density	Density Units	Volume	Volume Units	Concentration	Concentration Units	Decay Date
241-C-107	UTOTAL	Sludge	6.08E+03	kg	S	1.55	g/mL	511	kL	7.68E+03	ug/g	Jan 1 2001 12:00AM
241-C-107	UTOTAL	Sludge	1.77E+03	kg	S	1.55	g/mL	90	kL	1.27E+04	ug/g	Jan 1 2001 12:00AM
241-C-107	UTOTAL	Sludge	1.44E+03	kg	S	1.55	g/mL	339	kL	2.74E+03	ug/g	Jan 1 2001 12:00AM
241-C-107	V	Sludge	9.05E+00	kg	S	1.55	g/mL	339	kL	1.72E+01	ug/g	Jan 1 2001 12:00AM
241-C-107	V	Sludge	2.40E+00	kg	S	1.55	g/mL	90	kL	1.72E+01	ug/g	Jan 1 2001 12:00AM
241-C-107	V	Sludge	1.36E+01	kg	S	1.55	g/mL	511	kL	1.72E+01	ug/g	Jan 1 2001 12:00AM
241-C-107	V	Total	2.51E+01	kg	S/E							Jan 1 2001 12:00AM
241-C-107	W	Sludge	6.46E+01	kg	S	1.55	g/mL	90	kL	4.63E+02	ug/g	Jan 1 2001 12:00AM
241-C-107	W	Sludge	2.43E+02	kg	S	1.55	g/mL	339	kL	4.63E+02	ug/g	Jan 1 2001 12:00AM
241-C-107	W	Sludge	3.67E+02	kg	S	1.55	g/mL	511	kL	4.63E+02	ug/g	Jan 1 2001 12:00AM
241-C-107	W	Total	6.75E+02	kg	S							Jan 1 2001 12:00AM
241-C-107	Y	Total	9.48E+01	kg	S							Jan 1 2001 12:00AM
241-C-107	Y	Sludge	5.15E+01	kg	S	1.55	g/mL	511	kL	6.51E+01	ug/g	Jan 1 2001 12:00AM
241-C-107	Y	Sludge	3.42E+01	kg	S	1.55	g/mL	339	kL	6.51E+01	ug/g	Jan 1 2001 12:00AM
241-C-107	Y	Sludge	9.08E+00	kg	S	1.55	g/mL	90	kL	6.51E+01	ug/g	Jan 1 2001 12:00AM
241-C-107	Zn	Sludge	7.46E+01	kg	S	1.55	g/mL	511	kL	9.42E+01	ug/g	Jan 1 2001 12:00AM
241-C-107	Zn	Sludge	1.58E+01	kg	S	1.55	g/mL	90	kL	1.14E+02	ug/g	Jan 1 2001 12:00AM
241-C-107	Zn	Sludge	8.66E+01	kg	S	1.55	g/mL	339	kL	1.65E+02	ug/g	Jan 1 2001 12:00AM
241-C-107	Zn	Total	1.77E+02	kg	S							Jan 1 2001 12:00AM
241-C-107	Zr	Total	7.39E+01	kg	S							Jan 1 2001 12:00AM
241-C-107	Zr	Sludge	2.69E+01	kg	S	1.55	g/mL	511	kL	3.39E+01	ug/g	Jan 1 2001 12:00AM
241-C-107	Zr	Sludge	1.74E+00	kg	S	1.55	g/mL	90	kL	1.25E+01	ug/g	Jan 1 2001 12:00AM
241-C-107	Zr	Sludge	4.53E+01	kg	S	1.55	g/mL	339	kL	8.62E+01	ug/g	Jan 1 2001 12:00AM

CALCULATION SHEET

PROJECT: BPP-WTP
JOB NO.: 24590
CALC NO.: 24590-WTP-MKC-FRP-00001
SHEET REV: 1
SHEET NO.: 137

BY: E. Berriss
DATE: 10/24/02

SUBJECT: Updated Emissions Run Feed Vector