0017186

DOE/RL-91-43

1991 Report on Hanford Site Land Disposal Restrictions for Mixed Wastes

BEST AVAILABLE COPY

NOV 1991
RECEIVED
EDMC

United States
Department of Energy
Richland, Washington

Approved for Public Release

9 2 1 2 6 4 0 0 8 0 1

LEGAL DISCLAIMER

This report was prepared as an account of work sponsored by an agency of the United States Government. Neither the United States Government nor any agency thereof, nor any of their employees, nor any of their contractors, subcontractors or their employees, makes any warranty, express or implied, or assumes any legal liability or responsibility for the accuracy, completeness, or any third party's use or the results of such use of any information, apparatus, product, or process disclosed, or represents that its use would not infringe privately owned rights. Reference herein to any specific commercial product, process, or service by trade name, trademark, manufacturer, or otherwise, does not necessarily constitute or imply its endorsement, recommendation, or favoring by the United States Government or any agency thereof or its contractors or subcontractors. The views and opinions of authors expressed herein do not necessarily state or reflect those of the United States Government or any agency thereof.

This report has been reproduced from the best available copy.
Available in paper copy and microfiche.

Available to the U.S. Department of Energy
and its contractors from
Office of Scientific and Technical Information
P.O. Box 62
Oak Ridge, TN 37831
(615) 576-8401

Available to the public from the U.S. Department of Commerce
National Technical Information Service
5285 Port Royal Road
Springfield, VA 22161
(703) 487-4650

Printed in the United States of America

DISCLM-1.CHP (1-91)

9 2 1 2 6 4 0 0 3 0 2

DOE/RL-91-43

UC-630

1991 Report on Hanford Site Land Disposal Restrictions for Mixed Wastes

D. Black

Date Published
October 1991

THIS PAGE INTENTIONALLY LEFT BLANK

9 2 1 2 6 4 0 0 8 0 3

United States
Department of Energy
P.O. Box 550
Richland, Washington 99352

Approved for Public Release

THIS PAGE INTENTIONALLY
LEFT BLANK

EXECUTIVE SUMMARY

Since the early 1940s, the contractors at the Hanford Site have been involved in the production and purification of nuclear defense materials. These production activities have resulted in the generation of large quantities of liquid and solid radioactive mixed waste (RMW). This waste is subject to regulation under authority of both the *Resource Conservation and Recovery Act of 1976*[1] (RCRA) and *Atomic Energy Act*.[2]

The Washington State Department of Ecology, U.S. Environmental Protection Agency, and U.S. Department of Energy have entered into an agreement, the *Hanford Federal Facility Agreement and Consent Order*[3] (commonly referred to as the Tri-Party Agreement) to bring Hanford Site operations into compliance with dangerous waste regulations. The Tri-Party Agreement required development of the original land disposal restrictions plan and its annual updates to comply with land disposal restriction requirements for RMW. This report is the first annual update of the plan.

9 2 1 2 6 4 0 0 8 0 4

---

[1]*Resource Conservation and Recovery Act of 1976*, as amended, 42 USC 6901, et seq.

[2]*Atomic Energy Act of 1954*, as amended, 42 USC 2011.

[3]Ecology, EPA, and DOE, 1990, *Hanford Federal Facility Agreement and Consent Order*, Vol. 1 and 2, Washington State Department of Ecology, U.S. Environmental Protection Agency, and U.S. Department of Energy, Olympia, Washington.

The Tri-Party Agreement requires, and the baseline plan and annual update reports provide, the information that follows.

- **Waste Characterization Plan**--Provides information regarding the timing for characterizing each land disposal restricted mixed waste. The sampling and analysis methods and protocols and a schedule for providing the characterization information, where available, are discussed.

- **Storage Report**--Identifies and describes the mixed waste at the Hanford Site, including the following: the RCRA dangerous waste code(s), process information necessary to identify the waste and make land disposal restriction determinations, quantities stored, generation rates, location and method of storage, an assessment of storage unit compliance status, storage capacity, and the bases and assumptions used in making the estimates. As an original basis, this report used the data submitted in the *National Report on Prohibited Wastes and Treatment Options*[4] (commonly referred to as the National Report) and the *Hanford Site LDR RMW Stream Data Package*.[5] Updated information has been added where available.

- **Treatment Report**--Identifies the current treatment processes, plans, and schedules for developing treatment technologies that meet land disposal restriction treatment standards.

---

[4]DOE, 1990, *National Report on Prohibited Wastes and Treatment Options*, U.S. Department of Energy, Washington, D.C.

[5]WHC, 1990, *Hanford Site LDR RMW Stream Data Package*, WHC-MR-0224, Westinghouse Hanford Company, Richland, Washington.

9212640085

- **Waste Minimization Plan**--Identifies methods for minimizing the generation of land disposal restricted waste. Includes process changes made or planned to reduce the generation of land disposal restricted waste, methods to minimize the volume of land disposal restricted waste, and methods to minimize the toxicity of newly generated waste. In this plan waste minimization is incorporated within waste reduction, which includes treatment methods (e.g., evaporation) to reduce waste quantities.

- **Schedule**--Provides schedules depicting the events necessary to achieve compliance with land disposal restriction requirements, including variances, exemptions, or time extensions necessary to achieve land disposal restrictions compliance.

The Hanford Site waste primarily resulted from defense materials production. Usable defense materials were separated from fission products waste through precipitation and solvent extraction processes. Large quantities of liquid waste resulted from these separation processes and were stored in underground single-shell tanks (SST) and double-shell tanks (DST). Additional waste volumes resulted from nuclear fuel fabrication activities, process laboratories activities, decontamination and cleaning of equipment and building structures, closure of process and storage units, and research and development activities such as the Fast Flux Test Facility.

Projected generation rates, after waste reduction, range from approximately 63,000 cubic meters per year during 1991 to approximately

9 2 1 2 6 4 0 0 8 0 6

84,900 cubic meters per year during 1996. Future waste generation rates depend on plant operating plans. For example, if Plutonium-Uranium Extraction (PUREX) operations are resumed, overall waste generation would increase.

The waste includes waste designated as characteristic dangerous waste; toxic, carcinogenic, and persistent by the Washington State criteria; and listed waste because it contains small amounts of spent solvents and discarded pure chemical products. The waste consists of liquid, sludges, hard crystalline material (salt cake), and contaminated equipment, paper, rags, etc. Much is already known about the waste characteristics from process information and sampling and analysis programs. Action schedules have been developed to further characterize the waste.

The waste currently is stored in underground SSTs and DSTs, in containers placed in storage units such as the Hanford Central Waste Complex, caissons, and retrievable storage units. A surface impoundment, the Liquid Effluent Retention Facility (LERF), is being constructed to store large quantities of waste that contain radionuclide concentrations low enough to allow surface storage. The waste will be removed from these storage units, treated to meet land disposal restriction standards, and sent to final disposal in accordance with schedules established in the Tri-Party Agreement.

Total Hanford Site storage capacity for land disposal restricted waste is approximately 570,000 cubic meters. Approximately 224,000 cubic meters of waste currently are in storage. The currently available DSTs could be filled to capacity in 1993. To alleviate the space shortage, up to four new DSTs are planned. The LERF basins dedicated to 242-A Evaporator process condensate

9 2 1 2 5 4 0 0 8 0 7

will be filled in 1992 and the storage space currently available at the Hanford Central Waste Complex is anticipated to be filled in 1996; however, additional buildings will be constructed as required to store waste generated in the future.

The waste treatment processes for these wastes include the current treatment processes to reduce corrosion of storage tanks and planned treatment processes to reduce waste toxicity and immobilize waste constituents. Current waste treatment consists of the addition of pH adjustment and corrosion inhibitors, concentration adjustments, and use of absorbents and solidifying agents. Planned waste treatment processes include development of neutralization and toxic constituent destruction processes (PUREX Plant ammonia destruction and corrosivity neutralization processes), development of waste separation and pretreatment processes (Waste Receiving and Processing Facility), use of a large-volume solidification unit for low-activity liquid waste (the Grout Treatment Facility), use of a vitrification plant to treat high-activity and transuranic DST waste (the Hanford Waste Vitrification Plant and its associated pretreatment facility), and development of an organic destruction process (the Effluent Treatment Facility).

The Hanford Site has developed a sitewide waste minimization plan that sets minimization goals and establishes processes for measuring progress toward these goals. Each plant or process has a plan to implement the Sitewide goals. Current waste minimization plans are expected to reduce dangerous waste generation by approximately 100,000 cubic meters per year.

9 2 1 2 6 4 0 0 8 0 8

Hanford Site First-, Second-, and Third-Third mixed wastes, which include characteristic wastes, are all subject to the 2-year national capacity variance (52 Federal Register 22520).[6] California list waste (40 Code of Federal Regulations [CFR] 268.32)[7] and solvent waste at the Hanford Site (40 CFR 268.30) are not covered by the national capacity variance. The continued storage of these wastes until sufficient treatment and disposal capacity is available for these wastes was negotiated as part of the Tri-Party Agreement. Schedules to implement the dangerous waste management compliance activities until treatment capacity is available are described in the Tri-Party Agreement. Any newly identified compliance actions will be scheduled in accordance with procedures established in the agreement.

9212640080 9

[6]EPA, 1990, *Land Disposal Restrictions for Third Third Scheduled Wastes, Final Rule*, Title 40, Code of Federal Regulations, Parts 148, 261, 262, 264, 265, 268, 270, 271, and 302, Federal Register, U.S. Environmental Protection Agency, Washington, D.C.

[7]EPA, 1990, *Land Disposal Restrictions*, Title 40, Code of Federal Regulations, Part 268, as amended, U.S. Environmental Protection Agency, Washington, D.C.

CONTENTS

1.0 INTRODUCTION 1-1
1.1 BACKGROUND AND PURPOSE 1-2
1.2 ASSUMPTIONS 1-3
1.3 SCHEDULE AND MECHANICS OF PLAN UPDATE 1-5
1.4 MILESTONE PLANNING PROCESS 1-5
1.5 ACTIVITIES AND ACHIEVEMENTS 1-6

2.0 SITE SUMMARY 2-1
2.1 WASTE GENERATION 2-1
2.2 WASTE CHARACTERIZATION 2-1
2.3 WASTE STORAGE 2-3
2.4 WASTE TREATMENT 2-4
2.4.1 Double-Shell Tank Waste 2-5
2.4.2 PUREX Plant Aging Waste 2-6
2.4.3 Single-Shell Tank Waste 2-6
2.4.4 242-A Evaporator Process Condensate 2-6
2.4.5 4843 Sodium Storage Facility Waste 2-7
2.4.6 PUREX Ammonia Scrubber Waste 2-7
2.4.7 PUREX Process Condensate 2-7
2.4.8 Hexone Waste 2-8
2.4.9 183-H Solar Basin Waste 2-8
2.4.10 PUREX Storage Tunnels Number 1 and 2 Waste (Lead, Mercury, and Silver) and PUREX Canyon Waste Pile (Lead) 2-8
2.4.11 Hanford Central Waste Complex Stored Low-Level, Transuranic, and PCB Waste; TRUSAF Stored Waste; and Retrievably Stored Low-Level, Transuranic, and PCB Waste 2-9
2.4.12 303-K Stored Waste 2-9
2.5 WASTE REDUCTION 2-9
2.6 VARIANCES, EXEMPTIONS, AND TIME EXTENSIONS 2-10

3.0 INDIVIDUAL WASTE STREAM INFORMATION 3-1
3.1 DOUBLE-SHELL TANK WASTE 3-1
3.1.1 Generation 3-1
3.1.2 Characterization 3-3
3.1.3 Storage 3-4
3.1.4 Treatment 3-5
3.1.5 Waste Reduction 3-7
3.1.6 Variances, Exemptions, Time Extensions 3-7
3.2 PUREX AGING WASTE 3-8
3.2.1 Generation 3-9
3.2.2 Characterization 3-9
3.2.3 Storage 3-10
3.2.4 Treatment 3-10
3.2.5 Waste Reduction 3-11
3.2.6 Variances, Exemptions, Time Extensions 3-11
3.3 SINGLE-SHELL TANK WASTE 3-11
3.3.1 Generation 3-12
3.3.2 Characterization 3-13
3.3.3 Storage 3-15

CONTENTS (cont)

3.3.4 Treatment 3-16
3.3.5 Waste Reduction 3-17
3.3.6 Variances, Exemptions, Time Extensions 3-17
3.4 242-A EVAPORATOR PROCESS CONDENSATE 3-18
3.4.1 Generation 3-18
3.4.2 Characterization 3-19
3.4.3 Storage 3-20
3.4.4 Treatment 3-20
3.4.5 Waste Reduction 3-21
3.4.6 Variances, Exemptions, Time Extensions 3-21
3.5 4843 SODIUM STORAGE FACILITY WASTE 3-22
3.5.1 Generation 3-22
3.5.2 Characterization 3-23
3.5.3 Storage 3-23
3.5.4 Treatment 3-24
3.5.5 Waste Reduction 3-25
3.5.6 Variances, Exemptions, Time Extensions 3-25
3.6 PUREX AMMONIA SCRUBBER WASTE 3-25
3.6.1 Generation 3-25
3.6.2 Characterization 3-26
3.6.3 Storage 3-28
3.6.4 Treatment 3-28
3.6.5 Waste Reduction 3-29
3.6.6 Variances, Exemptions, Time Extensions 3-29
3.7 PUREX PROCESS CONDENSATE 3-30
3.7.1 Generation 3-30
3.7.2 Characterization 3-31
3.7.3 Storage 3-32
3.7.4 Treatment 3-32
3.7.5 Waste Reduction 3-33
3.7.6 Variances, Exemptions, Time Extensions 3-33
3.8 HEXONE WASTE 3-33
3.8.1 Generation 3-33
3.8.2 Characterization 3-34
3.8.3 Storage 3-34
3.8.4 Treatment 3-35
3.8.5 Waste Reduction 3-35
3.8.6 Variances, Exemptions, Time Extensions 3-35
3.9 183-H SOLAR BASIN WASTE 3-36
3.9.1 Generation 3-36
3.9.2 Characterization 3-37
3.9.3 Storage 3-40
3.9.4 Treatment 3-40
3.9.5 Waste Reduction 3-41
3.9.6 Variances, Exemptions, Time Extensions 3-41
3.10 PUREX STORAGE TUNNEL #2 WASTE (Mercury) 3-42
3.10.1 Generation 3-42
3.10.2 Characterization 3-42
3.10.3 Storage 3-43
3.10.4 Treatment 3-44

9 2 1 2 6 4 0 9 8 1 1

CONTENTS (cont)

3.10.5 Waste Reduction 3-44
3.10.6 Variances, Exemptions, Time Extensions 3-45
3.11 PUREX STORAGE TUNNELS #1 AND #2 WASTE (LEAD AND SILVER) 3-45
3.11.1 Generation 3-45
3.11.2 Characterization 3-46
3.11.3 Storage 3-47
3.11.4 Treatment 3-47
3.11.5 Waste Reduction 3-48
3.11.6 Variances, Exemptions, Time Extensions 3-48
3.12 PUREX CANYON WASTE PILE (LEAD) 3-48
3.12.1 Generation 3-48
3.12.2 Characterization 3-49
3.12.3 Storage 3-50
3.12.4 Treatment 3-50
3.12.5 Waste Reduction 3-51
3.12.6 Variances, Exemptions, Time Extensions 3-51
3.13 HANFORD CENTRAL WASTE COMPLEX STORED LOW-LEVEL, TRANSURANIC, AND POLYCHLORINATED BIPHENYL WASTE 3-51
3.13.1 Generation 3-52
3.13.2 Waste Characterization 3-55
3.13.3 Storage 3-56
3.13.4 Treatment 3-57
3.13.5 Waste Reduction 3-62
3.13.6 Variances, Exemptions, Time Extensions 3-63
3.14 RETRIEVABLY STORED LOW-LEVEL AND TRANSURANIC WASTE 3-64
3.14.1 Generation 3-65
3.14.2 Characterization 3-65
3.14.3 Storage 3-66
3.14.4 Treatment 3-69
3.14.5 Waste Reduction 3-69
3.14.6 Variance, Exemptions, Time Extensions 3-69
3.15 TRANSURANIC WASTE STORAGE AND ASSAY FACILITY STORED WASTE 3-70
3.15.1 Generation 3-70
3.15.2 Characterization 3-71
3.15.3 Storage 3-72
3.15.4 Treatment 3-73
3.15.5 Waste Reduction 3-73
3.15.6 Variances, Exemptions, Time Extensions 3-74
3.16 303-K STORED WASTE 3-74
3.16.1 Generation 3-74
3.16.2 Characterization 3-75
3.16.3 Storage 3-76
3.16.4 Treatment 3-76
3.16.5 Waste Reduction 3-76
3.16.6 Variances, Exemptions, Time Extensions 3-77

9 2 1 2 6 4 0 0 8 1 2

CONTENTS (cont)

4.0 REFERENCES 4-1
4.1 DOCUMENTS 4-1
4.2 CODE OF FEDERAL REGULATIONS AND FEDERAL REGISTER 4-3
4.3 FEDERAL AND STATE ACTS 4-3
4.4 WASHINGTON ADMINISTRATIVE CODE 4-4

LIST OF FIGURES

2-1 Operating Schedules for Units Managing Land Disposal Restricted Wastes F2-1.1
2-2 Permitting Schedules for Units Managing Land Disposal Restricted Waste F2-2.1
2-3 Double-Shell Tank Waste Treatment Flow Diagram F2-3
2-4 Plutonium-Uranium Extraction Aging Waste Treatment Flow Diagram F2-4
2-5 Double-Shell Tank Waste Treatment Schedule F2-5
2-6 Single-Shell Tank Waste Treatment Flow Diagram F2-6
2-7 Hanford Central Waste Complex Stored Waste, Retrievably Stored Waste, 183-H Solar Basin Waste, and 303-K Waste Treatment Flow Diagram. F2-7
3-1 Double-Shell Tank Space Summary F3-1
3-2 Double-Shell Tank Waste Disposal Flow Diagram F3-2
3-3 Process Flow Diagram for Disposal of Double-Shell Tank Waste F3-3
3-4 Process Flow Diagram for Neutralized Current Acid Waste Pretreatment F3-4
3-5 Plutonium-Uranium Extraction Aging Waste Transfers to Aging Waste Storage F3-5
3-6 Relative Proportions of Supernatant, Sludge, and Salt Cake in Single-Shell Waste F3-6
3-7 Single-Shell Tank Waste Inventory by Tank Farm F3-7
3-8 Process Flow Diagram for 242-A Evaporator Waste Treatment . . . F3-8
3-9 Historical Process Flow Diagram for Plutonium-Uranium Extraction Ammonia Scrubber Waste Generation F3-9
3-10 Interim Process Flow Diagram for Plutonium-Uranium Extraction Ammonia Scrubber Waste Generation F3-10
3-11 Process Flow Diagram for Proposed Plutonium-Uranium Extraction Ammonia Destruction Process F3-11
3-12 Ammonia Scrubber Waste Transfers to Double-Shell Tanks F3-12
3-13 Historical Process Flow Diagram for Plutonium-Uranium Extraction Process Condensate F3-13
3-14 Interim Process Flow Diagram for Plutonium-Uranium Extraction Process Condensate F3-14
3-15 Process Flow Diagram for Future Plutonium-Uranium Extraction Process Condensate Generation F3-15
3-16 Process Flow Diagram for Hexone Waste Processing and Disposal. F3-16
3-17 Plan View of Hanford Central Waste Complex F3-17

9 2 1 2 6 4 0 0 8 1 3

LIST OF FIGURES (cont)

3-18 Process Flow Diagram for Proposed Waste Receiving and Processing Facility Module 2 . . . . . F3-18
3-19 Typical Configuration of Retrievable Storage Unit for Contact-Handled Waste F3-19
3-20 Typical Configuration of a Retrievable Storage Unit for Remote-Handled Waste F3-20
3-21 Transuranic Storage and Assay Facility Floor Plan F3-21

LIST OF TABLES

1-1 Stream Names for the *Hanford Land Disposal Restrictions Plan for Mixed Wastes* T1-1
1-2 Relationship of Streams in the *Hanford Land Disposal Restrictions Plan for Mixed Wastes* to those Previously Reported T1-2.1
2-1 Summary of Annual Waste Generation Projections T2-1
2-2 Waste Stream Characterization T2-2.1
2-3 Hazardous Waste Designations of Plan Waste Streams T2-3.1
2-4 Storage Unit Characteristics T2-4.1
2-5 Stored Waste Characteristics T2-5.1
2-6 Treatment of Land Disposal Restricted Waste for Disposal . . . T2-6.1
2-7 Waste Reduction Activities for Hanford Site Land Disposal Mixed Wastes T2-7.1
3-1 Chemical Concentrations in Double-Shell Tank Waste T3-1
3-2 Plutonium-Uranium Extraction Aging Waste Composition T3-2
3-3 Sample Analysis for Plutonium-Uranium Extraction Aging Waste Stored in Tanks 241-AZ-101 and 241-AZ-102 . . . . . T3-3
3-4 Estimated Mass of Nonradioactive Chemical Components of Existing Single-Shell Tank Waste after Completion of Jet Pumping T3-4
3-5 Hanford Site Single-Shell Tank Releases T3-5.1
3-6 Analytes Detected in 242-A Evaporator Process Condensate . . . T3-6.1
3-7 Analytes Reported in Plutonium-Uranium Extraction Plant Ammonia Scrubber Discharge T3-7
3-8 Analyses for Plutonium-Uranium Extraction Plant Ammonia Scrubber Feed Stored in Double-Shell Tanks T3-8
3-9 Analytes Reported in the Plutonium-Uranium Extraction Plant Process Condensate T3-9.1
3-10 Analyses of Hexone Waste (before distillation in 1990) T3-10
3-11 Routine Wastes Discharged to 183-H Solar Basins T3-11
3-12 Plutonium-Uranium Extraction Plant Storage Tunnels #1 and #2 Waste (Lead and Silver) Generation T3-12
3-13 Projected Generation of Hanford Central Waste Complex Stored Low-level and Transuranic Waste T3-13
3-14 Quantities and Designation of Low-Level Waste Currently in Storage at the Hanford Central Waste Complex T3-14

LIST OF TABLES (cont)

3-15 Quantities and Designation of Transuranic Waste Currently in Storage at the Hanford Central Waste Complex T3-15
3-16 Quantities and Designation of Low-Level Waste Currently in Storage at the Retrievable Storage Units T3-16
3-17 Quantities and Designation of Transuranic Waste Currently in Storage at the Retrievable Storage Units T3-17
3-18 Quantities and Designation of TRUSAF Stored Waste T3-18
3-19 Designation of 303-K Facility Stored Waste (June 1991) T3-19

9 2 1 2 6 4 0 0 8 1 5

ACRONYMS AND ABBREVIATIONS

CFR	Code of Federal Regulations
DOE-HQ	U.S. Department of Energy-Headquarters
DOE	U.S. Department of Energy
DST	double-shell tank
Ecology	Washington State Department of Ecology
EIS	Environmental Impact Statement
EPA	U.S. Environmental Protection Agency
FFTF	Fast Flux Test Facility
FR	Federal Register
FY	fiscal year
GTF	Grout Treatment Facility
HEPA	high-efficiency particulate air (filter)
HWVP	Hanford Waste Vitrification Plant
LERF	Liquid Effluent Retention Facility
NEPA	*National Environmental Policy Act*
NCAW	neutralized current acid waste
NCRW	neutralized cladding removal waste
PCB	polychlorinated biphenyl
PFP	Plutonium Finishing Plant
PUREX	Plutonium-Uranium Extraction (Facility)
RCRA	*Resource Conservation and Recovery Act of 1976*
RL	U.S. Department of Energy Field Office, Richland
SST	single-shell tank
TCLP	toxic characteristic leach procedure
Tri-Party Agreement	*Hanford Federal Facility Agreement and Consent Order*
TRUSAF	Transuranic Waste Storage and Assay Facility
TSCA	*Toxic Substances Control Act*
WAC	Washington Administrative Code
Westinghouse Hanford	Westinghouse Hanford Company
WIPP	Waste Isolation Pilot Plant
WRAP	Waste Receiving and Processing (Facility)

9 2 1 2 6 4 0 0 8 1 6

This page intentionally left blank.

9 2 1 2 6 4 0 8 1 7

1.0 INTRODUCTION

This baseline plan was prepared in 1990 in accordance with the *Hanford Federal Facility Agreement and Consent Order* (commonly referred to as the Tri-Party Agreement) Milestone M-26-00 (Ecology et al. 1990). The text of this milestone is below.

> Land disposal restriction requirements include limitations on storage of specified hazardous wastes (including mixed wastes). In accordance with approved plans and schedules, the U.S. Department of Energy (DOE) shall develop and implement technologies necessary to achieve full compliance with land disposal restriction requirements for mixed wastes at the Hanford Site. Land disposal restriction plans and schedules shall be developed with consideration of other action plan milestones and will not become effective until approved by the U.S. Environmental Protection Agency (EPA) (or Washington State Department of Ecology [Ecology]) upon authorization to administer land disposal restrictions pursuant to Section 3006 of the *Resource Conservation and Recovery Act of 1976* (RCRA). Disposal of land disposal restriction wastes at any time is prohibited except in accordance with applicable land disposal restriction requirements for nonradioactive wastes at all times. The plan will include, but not be limited to, the following:
>
> - Waste characterization plan
> - Storage report
> - Treatment report
> - Treatment plan
> - Waste minimization plan
> - A schedule depicting the events necessary to achieve full compliance with land disposal restriction requirements
> - A process for establishing interim milestones.

The original plan was published in October 1990. This is the first of a series of annual updates required by Tri-Party Agreement Milestone M-26-01.

The 1990 baseline plan is a follow-on document to both the *National Report on Prohibited Wastes and Treatment Options* (DOE 1990) (commonly referred to as the National Report), which identified all solvent (40 Code of Federal Regulations [CFR] 268.30) and California list (40 CFR 268.32) wastes that are restricted from land disposal, and a subsequent effort by the DOE (WHC 1990a) to identify any additional waste that was restricted from land disposal as a result of First-, Second-, and Third-Third land disposal restrictions promulgation (55 Federal Register [FR] 22520).

1.1 BACKGROUND AND PURPOSE

On September 19, 1989, the DOE entered into a federal facilities compliance agreement with the EPA and the Colorado Department of Health regarding the storage of certain radioactive mixed wastes at the Rocky Flats Plant. The agreement required the DOE to prepare and submit to the EPA the National Report. This report (DOE 1990) was submitted to EPA in January 1990. It included information on all DOE sites that store radioactive mixed waste subject to the land disposal restrictions in effect at the time of report preparation.

Since that time additional land disposal restrictions for dangerous waste have been promulgated by the EPA (55 FR 22520). These restrictions resulted in additional waste being restricted from land disposal. These wastes were not included in the National Report. To assess the impact of these new restrictions on DOE facilities, a survey of all DOE sites was conducted by the DOE to identify any additional waste that was restricted from land disposal as a result of this Thirds rule. The data from this survey, commonly called the Thirds Report (WHC 1990a), currently are being used by DOE together with the National Report to prepare a database that will describe the type, quantities, and treatment plans for all land disposal restricted waste generated by DOE facilities.

This report is a detailed description of the generation and management of land disposal restricted mixed waste generated, treated, and stored at the Hanford Site. This report discusses the land disposal restricted waste (mixed waste) managed at the Hanford Site by point of generation and current storage locations. The waste is separated into groups based on the future treatment of the waste before disposal. This grouping resulted in the definition of 16 groups or streams of land disposal restricted waste. The 16 stream names used for this plan are shown in Table 1-1.

The 16 waste streams identified for this plan combine several of the waste streams identified in the National Report and the case-by-case extension petition. This petition is to allow additional time to develop treatment capability and is further described in Section 1.5. The relationship among the stream names used for this plan and those used for the National Report and the case-by-case petition is shown in Table 1-2. Table 1-2 indicates that some of the streams included in the National Report were not included in the case-by-case petition and vice versa. These exclusions are not due to errors in compiling the reports but are due to a difference in the scope of each specific report. The National Report included solvent waste (40 CFR 268.30) and California list (40 CFR 268.32) wastes, whereas the case-by-case petition was to include all nonsolvent waste that was restricted from land disposal. This report encompasses the Hanford Site-specific aspects of the National Report and the case-by-case petition, as well as newly identified land disposal restricted waste.

9 2 1 2 6 4 0 0 8 1 9

1.2 ASSUMPTIONS

This section lists key milestones and assumptions used in the preparation of this plan.

The Tri-Party Agreement (Ecology et al. 1990) milestones will be met as identified in the approved work schedules of the Tri-Party Agreement. The key milestones related to the management of land disposal restricted waste identified in the Tri-Party Agreement are below, including approved change requests.

- Complete 14 grout campaigns of double-shell tank (DST) waste by December 1996 (M-01-00) (27-month delay since original plan).
- Initiate pretreatment of neutralized current acid waste (NCAW) (M-02-00). The date is still to be determined (was October 1993) due to possible changes in plans from use of B Plant to an undetermined facility.
- Initiate Hanford Waste Vitrification Plant (HWVP) operations by December 1999 (M-03-00).
- Complete single-shell tank (SST) interim stabilization by September 1995 (M-05-00).
- Initiate full-scale demonstration of waste retrieval technology by October 1997 (M-07-00).
- Complete analysis of at least two core samples from each SST by September 1998 (M-10-00).
- Complete construction and initiate operations of expanded laboratory hot cells by June 1994 (M-11-00).
- Complete construction and initiate operations of a low-level mixed waste laboratory by January 1992 (M-14-00).
- Complete Waste Receiving and Processing (WRAP) Module 1 construction and initiate operations by September 1996 (M-18-00).
- Complete WRAP Module 2 construction and initiate operations by September 1999 (M-19-00).

The following are key assumptions that have been used to develop the treatment plans and schedules for DST waste (WHC 1989a):

- The transuranic-extraction process is an acceptable technology for the removal of transuranic elements from neutralized cladding removal waste (NCRW), Plutonium Finishing Plant (PFP) waste, and complexant concentrate waste
- The HWVP will be able to treat NCAW, NCRW, PFP waste, and complexant concentrate waste without blending

9 2 1 2 6 4 0 0 8 2 0

- Organics in complexant concentrate waste can be destroyed by a high-temperature and pressure process, an ozonization process, or a hydrogen peroxide process

- A system of two mixer pumps will satisfactorily mobilize DST sludges

- Double-shell slurry does not require pretreatment before grout disposal

- The DST space, including up to four new tanks, will be available to support all DST waste disposal activities

- The HWVP process equipment will be provided to remove transuranic elements from the HWVP process effluent streams, and process effluents from HWVP operations can be disposed of at the Grout Treatment Facility (GTF) without additional treatment

- The following waste types will be pretreated before disposal: NCAW, NCRW, PFP, and complexant concentrate.

Below are key assumptions with respect to the generation of DST waste and the use of tank space.

- The Liquid Effluent Retention Facility (LERF) will be available in about April 1992 to store 242-A Evaporator process condensate.

- A treatment unit for 242-A Evaporator process condensate will be available in October 1994.

- An Environmental Impact Statement (EIS) is being prepared to ensure proper environmental consideration before selection of an appropriate management, treatment, and disposition option for the stored reactor fuel at the Hanford Site. During the course of the EIS process, the Plutonium-Uranium Extraction (PUREX) Facility, as one of the options, will remain in a standby condition. The earliest date for PUREX startup would be fiscal year (FY) 1998.

- During PUREX Facility standby, no PUREX aging waste, PUREX process condensate, or PUREX ammonia scrubber waste will be generated. Any future PUREX process condensate and PUREX ammonia scrubber condensate streams will not be dangerous wastes.

- Waste generation projections for PUREX Facility operations, if selected as the preferred option, will be based on plant configuration changes and upgrades to be considered during the course of PUREX Facility restart planning.

9 2 1 2 6 4 0 8 2 1

1.3 SCHEDULE AND MECHANICS OF PLAN UPDATE

Information in the baseline plan will be updated by additional future annual reports in accordance with Tri-Party Agreement (Ecology et al. 1990) Milestone M-26-01. The annual reports include the following:

- Addition of new land disposal restricted waste streams as they are identified or regrouped
- Revision of the stream generation rates to reflect current operating plans and schedules
- Revision to treatment plans and schedules to reflect further defined waste treatments and treatment schedules
- Revision to the stream characterizations to reflect additional sample analyses or process changes
- Revision to the compliance status of the units to reflect future compliance assessments and permitting activities
- Reevaluation of the adequacy of the capacity of current units for the storage of land disposal restricted waste.

1.4 MILESTONE PLANNING PROCESS

Milestones and work schedules for activities related to the management of land disposal restricted mixed waste shall be consistent with the comprehensive work schedules contained in Appendix D of the Tri-Party Agreement (Ecology et al. 1990) and the annual update to the work schedule. The scope of these schedules includes interim milestones and additional target dates to accomplish the major milestones contained in Section 2.0 of the Tri-Party Agreement. Summary milestone schedules for activities related to the management of land disposal restricted mixed waste are discussed in Chapter 3.0 of the Tri-Party Agreement. Any new or additional land disposal restrictions milestones, as well as changes to approved land disposal restrictions milestone schedules, shall be implemented via the Change Control System process defined in Section 12.0 of the Tri-Party Agreement.

In addition to the procedural requirements of the Tri-Party Agreement, the land disposal restrictions milestone planning process exercised by the DOE and its contractors also involves consideration of the DOE and federal budget process, integration with other concurrent Hanford Site operations (including waste management and environmental restoration activities), and overall sitewide regulatory compliance and coordination with other milestone initiatives described in the Tri-Party Agreement. Because these planning elements are numerous and complex, coordination and resolution of issues shall be accomplished through the ongoing project managers' and unit managers' meetings within the broader framework provided by Section 8.0 of the Tri-Party Agreement. Also, land disposal restricted waste management activities shall be included, as appropriate, in Tri-Party Agreement quarterly progress reports, and summarized each year, as required by Milestone M-26-01, in this annual report.

9 2 1 2 6 4 0 0 8 2 2

1.5 ACTIVITIES AND ACHIEVEMENTS

This section summarizes major activities and accomplishments related to compliance with land disposal restrictions for the period of approximately October 1, 1990, through September 30, 1991.

- Fifty-seven drums of degreaser solvent stored at 303-K were analyzed. Twenty-four were found to be radioactive and eight of these contained ^{60}Co. The reason for the cobalt contamination is unknown. Thirty-three drums were found to be nonradioactive.

- An effort to redefine the current 16 waste streams based on revised treatability protocols was initiated by the U.S. Department of Energy-Headquarters (DOE-HQ). Results of this effort are expected to be incorporated in the next update of this report.

- As a result of state and EPA concerns, B Plant is being reconsidered for use as a pretreatment facility before waste vitrification. No decision has been made yet on a possible replacement facility. A study currently is in progress.

- Efforts are underway to privatize the Site's capabilities for low-level laboratory work. It initially was planned to construct a DOE facility in the 200 West Area. The DOE policy now is to encourage private company investment.

- Distillation of hexone waste located in the 200 West Area was completed. This is the first treatment step for this waste, to be followed by offsite incineration.

- The remaining waste was removed from the 183-H basins. The precipitates and sludges have been packaged and shipped to the Hanford Central Waste Complex for storage.

- The decision was made to close the 4843 Sodium Storage Facility.

- Eight flammable mixed waste storage modules are available in the Hanford Central Waste Complex.

- Schedules for startup of the LERF and 242-A Evaporator were delayed into calendar year 1992.

- Construction of four additional grout vaults continued.

- In May 1991 DOE, EPA, and Ecology reached agreement on a significant number of changes to the Tri-Party Agreement (Ecology et al. 1990). This was followed by a public review process. The major changes relating to land disposal restrictions follow.

  - **Hanford Site Project Management System Upgrades**--The DOE has agreed to enhance and modify its project management system to ensure strict lines of accountability, frequent reporting of

9 2 1 2 6 4 0 8 2 3

program status under Tri-Party Agreement milestones, identification of actions necessary to get any part of the cleanup effort back on schedule, and cost control accounting.

- **Liquid Effluent Treatment and Disposal**--The DOE has agreed to include treatment or closure schedules in the Tri-Party Agreement for 33 of the most significant liquid effluent streams that discharge to the soil at the Hanford Site. The near-term environmental impact of the 12 highest priority discharges will be significantly reduced by operating restrictions enforced through the Tri-Party Agreement. These improved practices already are being put into effect. For example, the volume of liquids discharged to the soil at N Reactor has been reduced by 99%.

- **Pretreatment**--A new date for initiation of pretreatment operations will be proposed upon completion of a study to evaluate pretreatment options for DST waste. This study will be completed in December 1991. The study is intended to identify pretreatment solutions that are consistent with the 1999 HWVP hot startup. However, the parties recognize that this milestone may need to be revised if clear and technically valid reasons demonstrate that DOE cannot meet a December 1999 date.

- **Hanford Waste Vitrification Plant**--The HWVP hot startup date of December 1999 remains unchanged. Initiation of construction is proposed to begin in April 1992 to support the December 1999 date.

- **Grout**--Completion of the first 14 grout campaigns will be delayed from September 1994 to December 1996 to accommodate additional safety requirements, to provide time for DOE to resolve grout formulation problems, and for verification of grout solidification. Three additional enforceable milestones are proposed to be added for the initiation of vault construction.

- **SST Waste Characterization**--Changes were made to characterization milestones due to tank safety issues that continue to be addressed. One milestone is redefined to cover the preparation of a Sitewide integrated waste sampling plan covering highly radioactive samples. Following completion of the Sitewide plan, which is due in March 1992, DOE will propose revised schedules for characterization milestones. No changes to the September 1998 major milestone are proposed. A new enforceable milestone is proposed to be added to restore rotary mode sampling capability for Hanford Site tank wastes. This proposed milestone has a due date of September 1992.

- **New DSTs**--A change was made for construction of additional DSTs. These tanks are necessary to provide more flexibility in safely handling wastes for pretreatment before disposal.

9 2 1 2 6 4 9 0 8 2 4

- **B Plant Hazardous Waste Permit**--The milestone is proposed to be redefined due to the uncertainties regarding B Plant operating status. A new date for submittal of the permit application or closure plan will be established upon completion of the DST pretreatment study.

There was an effort underway as this report was written to rescope and redefine the current 16 waste streams. This effort was started by a DOE-HQ task group and was continued at the U.S. Department of Energy Field Office, Richland (RL). This redefinition was done in accordance with land disposal restrictions treatability protocols and resulted in new waste stream groupings by similarities in required treatment. The database records of the content of each container of stored waste are being examined to determine the required treatment in accordance with land disposal restrictions regulations. Minimal, if any, effect on site treatment needs is expected. The next update of this report will include the results of this regrouping effort.

The DOE is preparing a national case-by-case extension petition for Third-Third land disposal restrictions waste. The purpose of the extension is to allow additional time for the development of treatment capabilities for most wastes in the Third-Third regulations. The petition, including detailed information on Hanford Site wastes, is planned for submission to EPA.

9 2 1 2 6 4 0 0 8 2 5

Table 1-1. Stream Names for the *Hanford Land Disposal Restrictions Plan for Mixed Wastes.*

1.	Double-Shell Tank Waste
2.	PUREX Aging Waste
3.	Single-Shell Tank Waste (inventory in storage)*
4.	242-A Evaporator Process Condensate
5.	4843 Sodium Storage Facility Waste (inventory)*
6.	PUREX Ammonia Scrubber Waste (inventory in DSTs)*
7.	PUREX Process Condensate (inventory in DST)*
8.	Hexone Waste (inventory)*
9.	183-H Solar Basin Waste (inventory)*
10.	PUREX Storage Tunnel #2 Waste (Mercury)
11.	PUREX Storage Tunnels #1 and #2 Waste (Lead and Silver)
12.	PUREX Canyon Waste Pile (Lead)
13.	Hanford Central Waste Complex Stored Low-Level, Transuranic, and PCB Waste
14.	Retrievably Stored Low-Level and Transuranic Wastes (inventory)*
15.	TRUSAF Stored Waste
16.	303-K Stored Waste (inventory)*

*Not currently being generated.

PCB = polychlorinated biphenyl
PUREX = Plutonium-Uranium Extraction (Facility)
TRUSAF = Transuranic Waste Storage and Assay Facility.

9 2 1 2 6 4 0 0 8 2 6

Table 1-2. Relationship of Streams in the *Hanford Land Disposal Restrictions Plan for Mixed Wastes* to those Previously Reported. (sheet 1 of 7)

Case-by-case petition stream name	National Report stream name
1. Double-Shell Tank Waste	
Double-Shell Tank Miscellaneous Low-Level Waste	
2[a] T-Plant Equipment Decontamination Waste	Existing DST Waste
8 PUREX E5 Zr Cladding Removal (liquid)	Existing DST Waste
10 PUREX TK-F18 Waste	PUREX F18
10 PUREX TK-F18 Waste	Existing DST Waste
12 PUREX TK-U3/U4 Misc Waste	PUREX U3/U4, Miscellaneous Waste
12 PUREX TK-U3/U4 Misc Waste	Existing DST Waste
28 100 Area Phosphate LLW in DSTs	Existing DST Waste
30 221-T Decontamination Wastewater Solution	Existing DST Waste
31 100 Area Sulfate LLW in DST	Existing DST Waste
32 Fuel Fabrication Non-Complexed Waste in DSTs	Existing DST Waste
35 Pre-1980 Dilute Non-Complexed Waste in DSTs	Existing DST Waste
36 300-400 Area Non-Complexed Waste in DSTs	Existing DST Waste
38 Salt Well Dilute Non-Complexed and Complexed Waste	Existing DST Waste
41 PRF Lab Waste, PRF/RMC Low/High Salt Waste	PRF Low-Salt Waste
41 PRF Lab Waste, PRF/RMC Low/High Salt Waste	PRF Development & Analytical Lab Waste
41 PRF Lab Waste, PRF/RMC Low/High Salt Waste	PRF High-Salt Waste
41 PRF Lab Waste, PRF/RMC Low/High Salt Waste	Existing DST Waste
45 222-S Treatment Tanks	Existing DST Waste

Table 1-2. Relationship of Streams in the *Hanford Land Disposal Restrictions Plan for Mixed Wastes* to those Previously Reported. (sheet 2 of 7)

Case-by-case petition stream name	National Report stream name
50 B-Plant Dilute Non-Complexed Waste	Existing DST Waste
9 PUREX E5 Zr Cladding Removal Waste Solids	PUREX TK-E5
26 Double-Shell Slurry Feed	Existing DST Waste
26 Double-Shell Slurry	Existing DST Waste
37 Complexed Concentrate in DSTs	Existing DST Waste
47 PFP TRU Solids	Existing DST Waste
37 Dilute Complexed Concentrate	Not Included
28 Concentrated Phosphate Decontamination Waste	Not Included
2. PUREX Aging Waste	
27 PUREX Aging Waste	PUREX TK-F15/F16
3. Single-Shell Tank Waste	
25 Single-Shell Tank Waste	Single-Shell Tank Waste
4. 242-A Evaporator Process Condensate	
Not included[b]	Not Included[b]
5. 4843 Sodium Storage Facility Waste	
34 Alkali Metal Waste LSA	Not Included
6. PUREX Ammonia Scrubber Waste	
6 PUREX ASD	Not Included

Table 1-2. Relationship of Streams in the *Hanford Land Disposal Restrictions Plan for Mixed Wastes* to those Previously Reported. (sheet 3 of 7)

Case-by-case petition stream name	National Report stream name
7. PUREX Process Condensate	
11 PUREX Process Condensate	Not Included
8. Hexone Waste	
Not Included[c]	Hexone
9. 183-H Solar Basin Waste	
300 Fuels Fabrication Waste	Newly Generated 183-H Waste
13 183-H Solar Basin Waste	Retrievably Stored 183-H Waste
10. PUREX Storage Tunnel #2 Waste (Mercury)	
39 PUREX Tunnels Mercury Waste	Not Included[d]
11. PUREX Storage Tunnels #1 and #2 Waste (Lead and Silver)	
PUREX Tunnels Silver Waste	Not Included
40 PUREX Tunnels Lead Waste	Not Included
12. PUREX Canyon Waste Pile (Lead)	
46 PUREX Canyon Waste Pile	Not Included
13. Hanford Central Waste Complex Stored Low-Level, Transuranic, and PCB Waste	
Low-Level	
4 PFP LLW Laboratory and Maintenance Waste[d]	Not Included
14 PNL Laboratory and Plant Operations LLW	Included in HCWC Stored LLW Waste
14 PNL Laboratory and Plant Operations LLW	PNL SST Solid Sample Waste
16 325 Building Soil	Not Included

Table 1-2. Relationship of Streams in the *Hanford Land Disposal Restrictions Plan for Mixed Wastes* to those Previously Reported. (sheet 4 of 7)

Case-by-case petition stream name	National Report stream name
17 LLW Lead (majority of this stream is stored in HCWC)[d]	Not Included
20 FFTF Sodium Cleanup Waste	Included in HCWC Stored LLW Waste
21 100 Area Lab and Plant Operations LLW	Ammonia Analysis Waste
21 100 Area Lab and Plant Operations LLW	Defense Reactor Spent Decontamination Solutions
21 100 Area Lab and Plant Operations LLW	Defense Reactors Hydrazine Container
21 100 Area Lab and Plant Operations LLW	Included in HCWC Stored LLW Waste
24 340 Facility Cleanup Waste	Not Included
27 B Plant Mixed Waste	Included in HCWC Stored LLW Waste
42 222-S Laboratory Waste[d]	Included in HCWC Stored LLW Waste
44 PUREX LLW RMW[e]	Not Included
48 Crushed Fluorescent Tubes LLW	Not Included
Not Included[c]	Defense Reactor Hydrazine Analysis Waste
Not Included[c]	Defense Reactor Maintenance Waste
Not Included[c]	Defense Reactor Paint Waste
Not Included[c]	Defense Reactor Decontamination Agents
Not Included[c]	222-S Waste
Not Included[c]	Existing TRUEX Pilot Plant Waste
Not Included[c]	PUREX Chemsearch SS-80
Not Included[c]	PNL Spent Solvents

Table 1-2. Relationship of Streams in the *Hanford Land Disposal Restrictions Plan for Mixed Wastes* to those Previously Reported. (sheet 5 of 7)

Case-by-case petition stream name	National Report stream name
Transuranic	
43 PUREX TRU Maintenance Waste	Not Included
1 TRU Miscellaneous Paint Waste	Not Included
3 PFP TRU Laboratory and Maintenance Waste	Not Included
18 TRU Lead[d]	Not Included
22 TRU Crushed Fluorescent Tubes TRU	Not Included
Not Included[c]	PFP Analytical Laboratory Solvents
Not Included[c]	PRF Spent Solvent Extraction Solutions
Not Included	Defense Reactor Miscellaneous Waste
PCB	
23 TRU PCBs	Existing TRU PCBs
23 TRU PCBs	PFP PCB Contaminated Hydraulic Fluids
29 LLW RMW PCBs	Defense Reactor Miscellaneous Waste
Not Included[c]	PFP PCB Contaminated Hydraulic Fluid (LLW)
14. Retrievably Stored Low-Level and Transuranic Wastes	
Not Included	Retrievably Stored TRU
Not Included	Retrievably Stored LLW
18 TRU Lead[e]	Not Included
4 PFP LLW Laboratory and Maintenance Waste[e]	Not Included

Table 1-2. Relationship of Streams in the *Hanford Land Disposal Restrictions Plan for Mixed Wastes* to those Previously Reported. (sheet 6 of 7)

Case-by-case petition stream name	National Report stream name
42 222-S Laboratory Waste[e]	Included in HCWC Stored LLW Waste
44 PUREX LLW RMW[e]	Included in HCWC Stored LLW Waste
43 PUREX TRU RMW	Not Included
49 202A TRU Mixed Waste	Not Included
3 PFP TRU Laboratory and Maintenance Waste	Not Included
15. TRUSAF Stored Waste	
Not Included	Included in HCWC Stored TRU Waste
17 LLW Lead (majority of this stream is stored in HCWC)[e]	Not Included
15 PNL Laboratory and Plant Operations TRU	Not Included
33 2345Z TRU RMW	Not Included
16. 303-K Stored Waste	
19 333 & 334-A Buildings	Waste Acid Tanks B&C 334-A
19 333 & 334-A Buildings	HF and HNO_3 on Absorbent

Table 1-2. Relationship of Streams in the *Hanford Land Disposal Restrictions Plan for Mixed Wastes* to those Previously Reported. (sheet 7 of 7)

Case-by-case petition stream name	National Report stream name
Not Included	Fuel Fabrication Degreaser Solvents
Not Included	333 Building Waste Oil with HOC

[a]Numbers preceding stream name used for reporting purposes in case-by-case petition.
[b]Stream was not being generated when report was prepared.
[c]Solvent waste not in scope of petition.
[d]Stream identified in National Report but not included at publication.
[e]Stream stored in multiple locations.

ASD = ammonia scrubber distillate
HCWC = Hanford Central Waste Complex
DST = double-shell tank
FFTF = Fast Flux Test Facility
HCWC = Hanford Central Waste Complex
HOC = halogenated organic carbon
LLW = low-level waste
LSA = low specific activity
PCB = polychlorinated biphenyl
PFP = Plutonium Finishing Plant
PNL = Pacific Northwest Laboratory
PRF = Plutonium Reclamation Facility
PUREX = Plutonium-Uranium Extraction Facility
RMC = Remote Mechanical "C" Line
RMW = radioactive mixed waste
TRU = transuranic
TRUEX = transuranic extraction
TRUSAF = Transuranic Waste Storage and Assay Facility.

2.0 SITE SUMMARY

This section summarizes the generation, characterization, storage, treatment, and reduction of radioactive land disposal restricted waste at the Hanford Site. It also discusses the variances, exemptions, and time extensions required to manage this waste within the requirements established by 52 FR 22520 and 40 CFR 268.

2.1 WASTE GENERATION

The projected volumes of radioactive mixed waste to be generated are shown in Table 2-1. The assumptions governing these generation rates are discussed in detail in Chapter 1.0, Section 1.2. These assumptions can be summarized by the three general statements below.

- The operation of waste pretreatment, treatment (e.g., GTF, HWVP, WRAP), and disposal (e.g., GTF) units will proceed as scheduled in the Tri-Party Agreement (Ecology et al. 1990). The startup date of October 1993 for B Plant pretreatment is assumed, even though the startup date and location of pretreatment presently is under evaluation.

- It is assumed that obligations of the DOE arising under the Tri-Party Agreement will be fully funded. The DOE shall take all necessary steps and make efforts to obtain timely funding to meet its obligations under the Tri-Party Agreement. Ecology and the EPA shall assist RL in determining the specific tasks required to support the corresponding negotiated work schedule for each fiscal year, but will not become involved with the internal DOE budget process.

- Site production plants (e.g., PFP) will continue to operate within their current planning bases.

The annual waste generation volumes presented in Table 2-1 represent the current best estimates of future waste generation for each of the land disposal restricted mixed waste streams. These estimates are based on detailed evaluation of plant operating schedules, past operating history, and projections of future waste generation. The projected generation volumes may be higher or lower than the actual generation rates because of changes in waste treatment or production schedules or waste minimization activities.

2.2 WASTE CHARACTERIZATION

The radioactive mixed waste at the Hanford Site has been characterized, as documented in this plan, based on current process knowledge and, where available, waste sample analyses. Sampling and characterization of the waste will continue until the waste is disposed. Future characterization plans for the waste are summarized in Table 2-2.

The dangerous waste designations for the waste in storage are summarized in Table 2-3. This table shows the dangerous waste codes applicable to each of the waste streams. The assigned dangerous waste codes are based on the generation process and analyses of the waste streams. The waste designations shown in this table are based on the best available information. However, future waste characterization may show that additional waste codes not indicated on the table are applicable to a waste stream and some of the waste codes indicated are not applicable to the waste stream. If additional waste codes are found to be applicable to a waste stream, they will be included in the next annual update of this plan.

The waste stored in the SSTs, the DSTs, and the silver nitrate waste stored in the PUREX Storage Tunnels have been assigned the D001 (ignitable) waste designation because of the presence of nitrates and/or nitrites. They are not believed to be ignitable in the strict sense of the word. The applicability of the D001 (ignitable) waste designation is being investigated as part of the waste characterization programs.

The use of the F003 (spent nonhalogenated solvents) waste code to characterize the waste stored in the SSTs and DSTs has been assigned to the waste not because the waste contains significant quantities of spent nonhalogenated solvents, but because a small quantity of waste discharged to the tanks in the past may have contained spent nonhalogenated solvents. The potential for the past discharge of spent nonhalogenated solvents to have contaminated essentially all of the waste in the tanks has resulted in the waste being designated F003. The tank waste does not comprise large quantities of organic solvents, as is typically the case for waste designated F003. The tank waste primarily is inorganic in nature with trace contamination by F003 solvents.

The schedule and means for reporting waste characterization data are outlined in the Tri-Party Agreement (Ecology et al. 1990) as amended by new Section 9.6, "Data Reporting Requirements." This section states that the DOE will make available to Ecology and the EPA all validated laboratory analytical data collected pursuant to the Tri-Party Agreement within 15 days of data validation. Within 1 week after the laboratory data are validated, the DOE will notify Ecology and EPA of its availability. This notification will include the time and location of the sampling, the type of data available, and a list of the sample parameters or a target compounds list. The time limits for reporting sample analyses are SST analyses, 180 days; hot cell analyses, 100 days; and low-level and mixed waste, 75 days (after the date of sampling).

The quality assurance requirements for sample analysis are defined in the "Data Quality Strategy For Characterizing The Hanford Site," Appendix F to the Tri-Party Agreement. Before any sampling or analysis, the appropriate level of quality assurance/quality control will be defined and documented in accordance with *Guidelines and Specifications for Preparing Quality Assurance Program Plans* (EPA 1983a) and *Interim Guidance and Specifications for Preparing Quality Assurance Project Plans* (EPA 1983b). All laboratories that analyze samples for DOE also are required to have a quality assurance/quality control plan approved by the EPA and Ecology before being used to conduct analyses.

9 2 1 2 6 4 0 8 3 5

2.3 WASTE STORAGE

The Hanford Site has 16 units that currently store mixed waste. These 16 units can be divided into two groups: (1) six that no longer actively are receiving waste (SST waste, 4843 Sodium Storage Facility Waste, hexone waste, 183-H Solar Basin waste, retrievably stored low-level and transuranic waste, and 303-K stored waste) and (2) 10 that currently are receiving waste for storage to await treatment and disposal. The key characteristics of these units are summarized in Table 2-4.

The storage unit capacity for radioactive mixed waste at the Hanford Site is projected to be adequate for all currently generated mixed waste until 1996, assuming the availability of additional storage facilities. After startup, the LERF will be near its storage capacity for 242-A Evaporator process condensate (Chapter 3.0, Section 3.4). Current plans are to suspend 242-A Evaporator operations temporarily until waste treatment at the Effluent Treatment Facility can treat the stored process condensate and receive process condensate from the 242-A Evaporator. After the Effluent Treatment Facility has treated the process condensate stored in LERF (projected to be completed in 1994), it will treat process condensate directly without further storage at the LERF.

In 1993, the currently available DSTs are projected to reach their capacity for the storage of both aging waste (Chapter 3.0, Section 3.2) and nonaging waste (Chapter 3.0, Section 3.1). The latest plans are to design and construct up to four additional tanks. This is in accordance with Tri-Party Agreement (Ecology et al. 1990) Milestone M-31-00, with a completion date to be determined. Conceptual design will be complete in September 1992. The new tanks eventually should alleviate any tank space shortages. The space shortage occurs because the schedule for filling grout vaults has been delayed while the schedule for pretreatment is based on B Plant startup in October 1993, a previous Tri-Party Agreement milestone (M-02-00). The present agreement between Ecology and EPA is that DOE is conducting an engineering study on facility options and schedules for pretreatment. The engineering study is expected to be issued in December 1991. Based on this study, a new date for startup of pretreatment operations should be established in January 1992. A new date later than December 1993 for pretreatment startup is possible. This would relieve some DST space because pretreatment sludge washing operations result in additional DST waste generation. Also, as a matter of policy, waste minimization measures presently are practiced at the operating facilities to reduce DST waste generation.

The Hanford Central Waste Complex is projected to reach its capacity in 1996. This projection is based on the individual projections of all generators who ship waste to the Hanford Central Waste Complex. The projection of waste generation rates is refined annually. Should future projections indicate that increased storage capacity is required, additional storage units will be constructed and permitted on an as-needed basis.

The storage units for mixed waste at the Hanford Site have not released any dangerous constituents to the environment with the exception of the SSTs and the 183-H Solar Basins. The SSTs have released an estimated 2,600 cubic meters of liquid waste to the ground. This estimate excludes any cooling water added to tanks after they were known to be leaking. This volume

estimate currently is being reviewed for accuracy and may be revised. To minimize further releases from this storage unit, the pumpable liquid portion of the waste stored in the SSTs is being transferred to the DSTs. The amount of hazardous constituents released from the 183-H Solar Basins has not been estimated as this time.

The Part B submittal date for the mixed waste storage unit also is shown in Table 2-4. The date when each unit will be in full compliance with the interim status requirements is shown as the "Compliance Date." The date for submittal of the Part B permit application for each unit also is indicated in the table. The schedule for the permitting of the storage and treatment units currently used for mixed waste storage or planned for use in treating land disposal restricted waste is shown in Figure 2-1. The permitting and compliance schedules for these units have been negotiated as part of the Tri-Party Agreement.

The general characteristics of the radioactive mixed waste currently in storage at the Hanford Site are summarized in Table 2-5. The table shows that the Hanford Site currently stores approximately 224,000 cubic meters of radioactive mixed waste. The bulk of this waste (99%) is stored in the SSTs (62%) and DSTs (37%). The table also gives an indication of how much of the waste is low-level waste, transuranic waste, or high-level waste.

9 2 1 2 6 4 0 0 8 3 7

2.4 WASTE TREATMENT

The land disposal restrictions for dangerous waste (55 FR 22520 and Washington Administrative Code [WAC] 173-303-140) (WAC 1990) specify a series of treatment technologies or treatment standards for each dangerous waste code that is restricted from land disposal. If a treatment technology is specified for a waste code, that technology must be used to treat the waste before land disposal of the treatment residues. If a constituent concentration treatment standard is specified for a waste code, any treatment method may be used before land disposal so long as the treatment standard is met and so long as the waste is not impermissibly diluted. If a waste exhibits multiple waste codes, it must be treated in accordance with the technologies or constituent concentration standards associated with each of the waste codes present. For example, if a waste is ignitable (D001) and toxic characteristic leach procedure (TCLP) toxic for chromium (D007), the waste must be treated for both the characteristics of ignitability and TCLP toxicity.

This section summarizes the treatment standards applicable and those proposed for the Hanford Site waste; included are discussions of the following waste categories:

- Double-Shell Tank Waste (Chapter 3.0, Section 3.1)
- PUREX Aging Waste (Chapter 3.0, Section 3.2)
- Single-Shell Tank Waste (Chapter 3.0, Section 3.3)
- 242-A Evaporator Process Condensate (Chapter 3.0, Section 3.4)
- 4843 Sodium Storage Facility Waste (Chapter 3.0, Section 3.5)

- PUREX Ammonia Scrubber Waste (Chapter 3.0, Section 3.6)
- PUREX Process Condensate (Chapter 3.0, Section 3.7)
- Hexone Waste (Chapter 3.0, Section 3.8)
- 183-H Solar Basin Waste (Chapter 3.0, Section 3.9)
- PUREX Storage Tunnel #2 Waste (mercury) (Chapter 3.0, Section 3.10)
- PUREX Storage Tunnels #1 and #2 Waste (lead and silver) (Chapter 3.0, Section 3.11)
- PUREX Canyon Waste Pile (lead) (Chapter 3.0, Section 3.12)
- Hanford Central Waste Complex Stored Low-Level, Transuranic, and Polychlorinated Biphenyl (PCB) Waste (Chapter 3.0, Section 3.13)
- Retrievably Stored Low-Level and Transuranic Waste (Chapter 3.0, Section 3.14)
- Transuranic Waste Storage and Assay Facility (TRUSAF) Stored Waste (Chapter 3.0, Section 3.15)
- 303-K Stored Waste (Chapter 3.0, Section 3.16).

The applicable treatment standards (required by 55 FR 22520 and WAC 173-303-140) and the proposed treatments for the Hanford Site mixed waste are summarized in Table 2-6. The schedule for the operation of the treatment units is provided in Figure 2-2 (DOE-RL 1991).

2.4.1 Double-Shell Tank Waste

The DST waste consists of high-level, transuranic, and low-level waste. In the interim storage mode, however, the waste is managed as high-level waste. Before treatment for disposal, some of the waste (e.g., complexant concentrate, aging waste) will be separated into two streams: a low-level stream and a transuranic and/or high-level stream. The low-level stream will continue to be evaporated at the 242-A Evaporator to concentrate waste and solidified at the GTF; the high-level and transuranic streams will be vitrified at the HWVP.

Four waste types have been identified for feed vitrification, with preceding pretreatment: NCAW, complexant concentrate, PFP waste, and NCRW. Each waste has certain chemical properties and constituents that require specialized pretreatment to reduce the disposal cost. This pretreatment is accomplished by separating these wastes into a low-volume, high-level, and transuranic waste fraction and a relatively high-volume, low-level waste fraction. Certain other DST waste types, such as double-shell slurry and phosphate-sulfate waste, are anticipated to be disposed directly as grout without pretreatment.

9 2 1 2 6 4 0 0 8 3 8

Before disposal, appropriate testing of the solidification treatment for low-level waste and vitrification for high-level waste will be conducted to ensure the disposed waste will comply with the land disposal restriction standards. The high-level waste subsequently will be disposed of at a high-level waste repository in a still to be determined national location; the transuranic waste is planned to be disposed of at the Waste Isolation Pilot Plant (WIPP) in Carlsbad, New Mexico; and the low-level waste subsequently will be disposed of at the Grout Disposal Area located on the Hanford Site. Figures 2-3 and 2-4 depict the DST separation, treatment, and disposal processes.

Several Hanford Site plants are planned to perform treatment and disposal processes. The B Plant will be modified or a new facility will be constructed to perform the necessary waste separations. Initial pilot testing of some DST waste is scheduled to begin in 1993 and pretreatment operations are scheduled to begin in 1996. The GTF will begin treating and disposing of low-level liquid waste in FY 1991. The HWVP is scheduled to begin treating high-level and transuranic waste in December 1999; subsequent disposal of treated high-level waste will begin when a national repository is available, and disposal of treated transuranic waste is scheduled to begin when the WIPP is available for receipt of Hanford Site waste. The schedule for these treatment processes is shown in Figure 2-5 (WHC 1989a).

2.4.2 PUREX Plant Aging Waste

Treatment of the PUREX Plant aging waste is addressed in Section 2.4.1.

2.4.3 Single-Shell Tank Waste

The SST waste consists of low-level, transuranic, and high-level waste; however, in the interim storage mode it is managed as high-level waste. The physical forms of SST waste are sludge, salt cake, and liquid. Liquid waste, which includes supernatant and interstitial liquid within the salt cake, will be transferred to DSTs for subsequent treatment as necessary. The SST solids waste currently is being sampled and analyzed to determine the most effective means of retrieval, treatment, and disposal. An EIS will be prepared evaluating alternatives and selecting the appropriate treatment and disposal technologies. Figure 2-6 depicts the SST treatment and disposal processes.

2.4.4 242-A Evaporator Process Condensate

The 242-A Evaporator process condensate waste (containing trace organic solvents) will be stored in a surface impoundment (LERF) for a short time while a treatment plant is constructed. The Effluent Treatment Facility is being designed and will be constructed and operated to destroy organic constituents and to remove certain inorganic constituents. The Effluent Treatment Facility will treat the waste streams to allow discharge to the ground. A petition is being prepared to delist the process condensate after it is treated.

9 2 1 2 6 4 0 0 8 3 9

2.4.5 4843 Sodium Storage Facility Waste

The 4843 Sodium Storage Facility presently is not receiving additional material. Closure plans are being developed. Some nonradioactive material already has been shipped offsite for ultimate disposal by independent contractors. Mixed waste will be transported to the Hanford Central Waste Complex. A considered treatment for 4843 Sodium Storage Facility waste is deactivation by reacting it to form a sodium hydroxide/water solution and then reacting this solution with carbon dioxide to form sodium carbonate.

2.4.6 PUREX Ammonia Scrubber Waste

The PUREX ammonia scrubber waste is generated when ammonia gas from the N Reactor fuel decladding process is sprayed with water. In the past the ammonia-bearing solutions were boiled in a concentrator to separate the bulk of the entrained fission products from the ammonia scrubber discharge that was disposed in a crib. The remaining ammonia scrubber waste was transferred to DSTs.

In late 1987, it was determined that the ammonium hydroxide concentrations in the ammonia scrubber discharge sometimes exceeded 1%, making it a dangerous (toxic) waste as designated by state regulations and, therefore, not appropriate for discharge to the crib. The remaining ammonia scrubber feed no longer was concentrated for discharge, but treated for tank storage and transferred as ammonia scrubber waste to underground storage tanks. The treatment consisted of adding caustic to adjust the pH to greater than 12 and adding sodium nitrite to minimize tank corrosivity.

If the PUREX Plant restarts, plans for processing the ammonia scrubber stream will include an ammonia destruction treatment process so a significant portion of the stream will no longer be designated a dangerous or hazardous waste. The process will result in a much-reduced volume of dangerous waste stored in the DSTs and a nondangerous stream that will be discharged to a basin. The Evaporator/PUREX Condensate Treatment Facility will treat the ammonia scrubber waste. The PUREX Plant restart cannot occur until treatment capability is available.

2.4.7 PUREX Process Condensate

The PUREX process condensate is generated by condensing the vapors resulting from evaporative concentrations of N Reactor fuel solutions.

Until 1987 the PUREX process condensate stream was discharged directly to a crib if radioactivity was sufficiently low. After closure of the old crib and to prevent corrosive (pH <2) waste from being discharged into the new crib, potassium hydroxide was added and the stream was routed through a tank with calcium carbonate (limestone) before being discharged. In early 1989 the stream was rerouted temporarily to underground storage tanks pending resolution of its dangerous waste designation.

If the PUREX Plant restarts, a neutralization process is planned for the waste. The treatment process will result in a nondangerous stream that will

9 2 1 2 6 4 0 0 8 4 0

be discharged to a basin. The Evaporator/PUREX Condensate Treatment Facility will treat the PUREX process condensate. The PUREX Plant restart cannot occur until treatment capability is available.

2.4.8 Hexone Waste

Hexone waste was removed from the storage tanks in the 200 West Area in 1990 and distilled to remove radionuclides (except for tritium). The distillate now is stored in tank cars. The waste will be incinerated offsite. The treatment will reduce the hexone to carbon dioxide and water. Spent distillation vessels will be sent to the Hanford Central Waste Complex for storage and treatment. Disposal will depend on the transuranic radionuclide content remaining. If the content is high enough to place the waste in the transuranic classification (greater than 100 nanocuries per gram), the vessels will be packaged for shipment to the WIPP. If not, they will be disposed in a RCRA-compliant near-surface disposal unit.

2.4.9 183-H Solar Basin Waste

The 183-H Solar Basin waste, designated for ignitability, chromium, and trace listed commercial chemical products (formic acid, cyanide salts, vanadium pentoxide) results from closure of the 183-H Solar Basins storage unit. The contaminants and residues remaining in the 183-H Solar Basins are placed in containers and transported to the Hanford Central Waste Complex for storage. Subsequently, the waste will be treated at the WRAP Facility and disposed of in a near-surface disposal unit. The required treatment technology for formic acid is incineration; therefore, a treatability variance will be required before ultimate disposal of this waste.

2.4.10 PUREX Storage Tunnels Number 1 and 2 Waste (Lead, Mercury, and Silver) and PUREX Canyon Waste Pile (Lead)

The PUREX Plant waste includes lead solids, mercury, and silver waste stored in the PUREX tunnels and lead solids waste stored in the PUREX canyon waste pile. The required treatment for lead solids is microencapsulation and/or surface decontamination. If surface decontamination is selected, the treatment residue must meet the lead characteristic treatment standard of 5 milligrams per liter. Amalgamation or retorting and recovery are the required treatments for mercury waste. Any treatment that will achieve the constituent concentration limits is applicable for the silver waste.

Treatment options for this waste are being reviewed. Treatments have not been selected yet.

9 2 1 2 6 4 0 0 8 4 1

2.4.11 Hanford Central Waste Complex Stored Low-Level, Transuranic, and PCB Waste; TRUSAF Stored Waste; and Retrievably Stored Low-Level, Transuranic, and PCB Waste

Waste stored in the Hanford Central Waste Complex consists of low-level and transuranic mixed waste, much of which is co-contaminated with PCBs. The retrievably stored waste will be assayed and separated at the WRAP Facility into transuranic and low-level streams. This transuranic waste plus transuranic waste stored at the Transuranic Waste Storage and Assay Facility and the Hanford Central Waste Complex will be certified and shipped to WIPP for disposal. The low-level waste will be disposed of in a near-surface disposal unit. Mixed waste will be treated at the WRAP Facility or may be shipped offsite for treatment before disposal. Retrievably stored low-level and transuranic wastes primarily are contained in 0.21 cubic meter drums, metal boxes, wood boxes, and fiberglass reinforced plastic boxes. They are stored in various configurations of underground storage units. After retrieval, the waste will be treated at the WRAP Facility so it is acceptable for permanent disposal. The proposed treatments will comply with the 55 FR 22520 and WAC 173-303-140 treatment requirements. The specific processes to be used currently are being selected. Incineration in a planned incinerator may be used. The PCBs will continue to be stored until treatment capacity is identified. Figure 2-7 depicts the Hanford Central Waste Complex treatment and disposal processes.

2.4.12 303-K Stored Waste

The 303-K waste consists of container-stored waste. Current plans are to move the waste to storage at the Hanford Central Waste Complex for treatment by the WRAP Facility. The Hanford Central Waste Complex treatment plans are discussed in Section 2.4.11.

2.5 WASTE REDUCTION

Table 2-7 summarizes the waste reduction (minimization and treatment) methods currently in place or planned for the 16 waste units addressed in this plan. The table also shows schedules for implementation and the projected effectiveness of the method.

Future mixed-waste generation rates are dominated by the process condensate from the 242-A Evaporator (Table 2-1). In a typical year, over 20 times more process condensate is generated than all other waste streams combined. However, the planned Effluent Treatment Facility will reduce, by greater than 99%, the volume of process condensate designated as dangerous waste.

Next to the planned treatment of the 242-A Evaporator process condensate stream, the most significant waste reduction is seen for DST waste. Evaporation of the dilute waste received into the DST reduces an annual average generation of 14,700 cubic meters to approximately 3,000 cubic meters.

The waste currently stored at the Hanford Central Waste Complex will be processed at the WRAP Facility (described in Chapter 3.0, Section 3.13) before disposal. This facility will minimize the amount of land disposal restricted waste by separating the dangerous constituents from the nondangerous constituents.

In a typical year, waste reduction practices at the Hanford Site will reduce the volume by well over 100,000 cubic meters. The majority of the reduction is from treatment.

2.6 VARIANCES, EXEMPTIONS, AND TIME EXTENSIONS

Removal and treatment of the Hanford Site stored mixed waste to meet land disposal restrictions requirements are summarized in Section 2.4.

The national capacity variance for Third-Third waste (55 FR 22520) and a compliance agreement (Ecology et al. 1990) for solvent list waste (40 CFR 268.30) and California list waste (40 CFR 268.32) allows storage of the mixed waste in the various Hanford Site storage units until treatment and disposal capacity is available and the waste can be treated and disposed.

If additional variances, exemptions, or time extensions are required as a result of delays in the development of treatment, storage, or disposal capacity, they will be applied for in accordance with the procedures detailed in the Tri-Party Agreement (Ecology et al. 1990).

The Tri-Party Agreement provides for extension of a schedule or a deadline when good cause exists for an extension. An extension is requested in writing and the Tri-Party Agreement requires that it be accompanied by the following information:

- Identification of the scheduled deliverable for which an extension is sought
- The good cause for the extension
- Identification of any related schedule affected by the extension.

Good cause for an extension may include the following:

- Force majeure
- A delay caused by another party's failure to meet a requirement of the Tri-Party Agreement
- A delay caused by good faith invocation of dispute resolution procedures or initiation of judicial action
- A delay resulting from an extension granted to a related schedule
- Any other event mutually agreed to as constituting good cause.

9 2 1 2 6 4 0 0 8 4 3

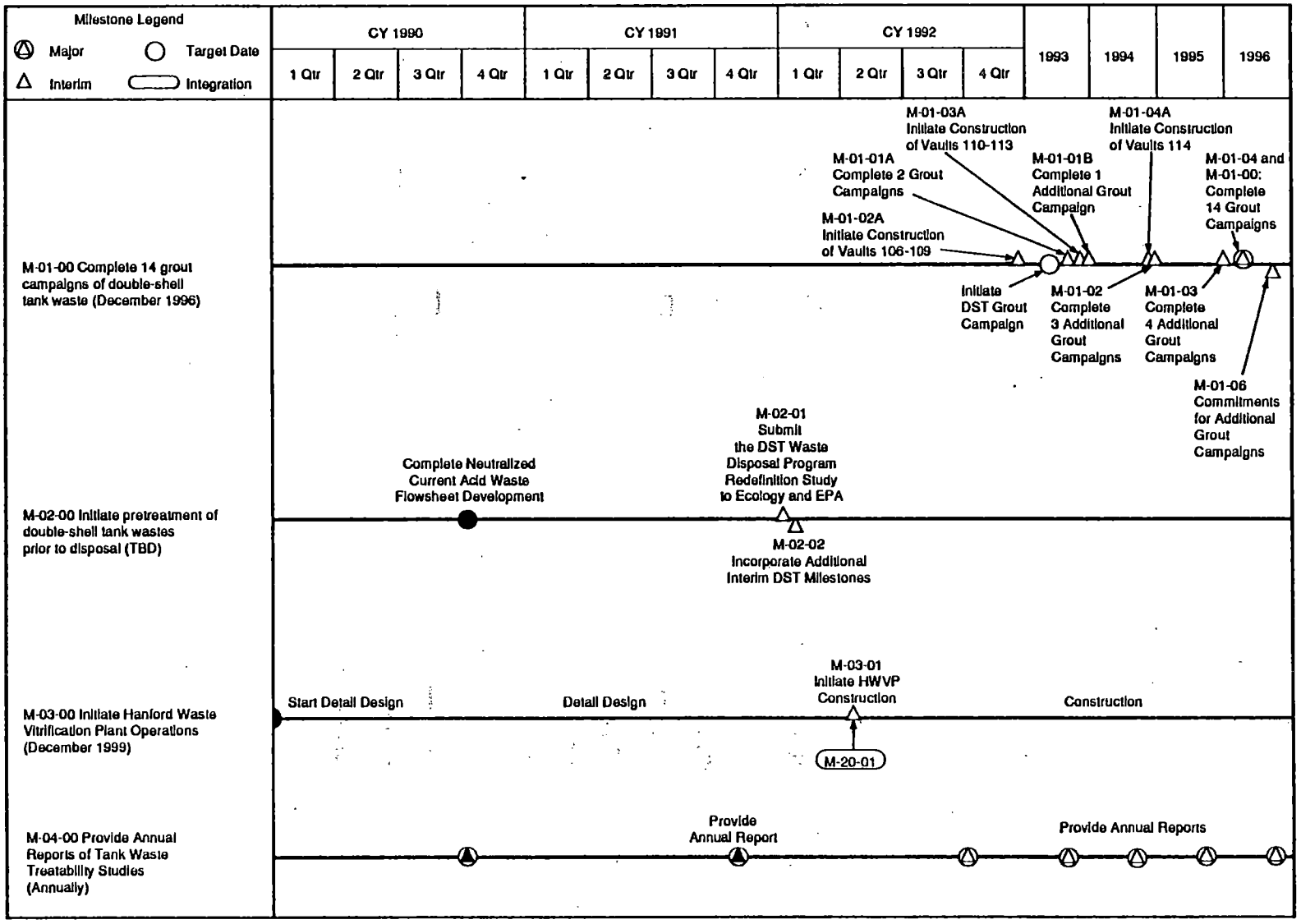

Ecology Washington State Department of Ecology
EPA U.S. Environmental Protection Agency
DST double-shell tank

Figure 2-1. Operating Schedules for Units Managing Land Disposal Restricted Wastes. (sheet 1 of 4)

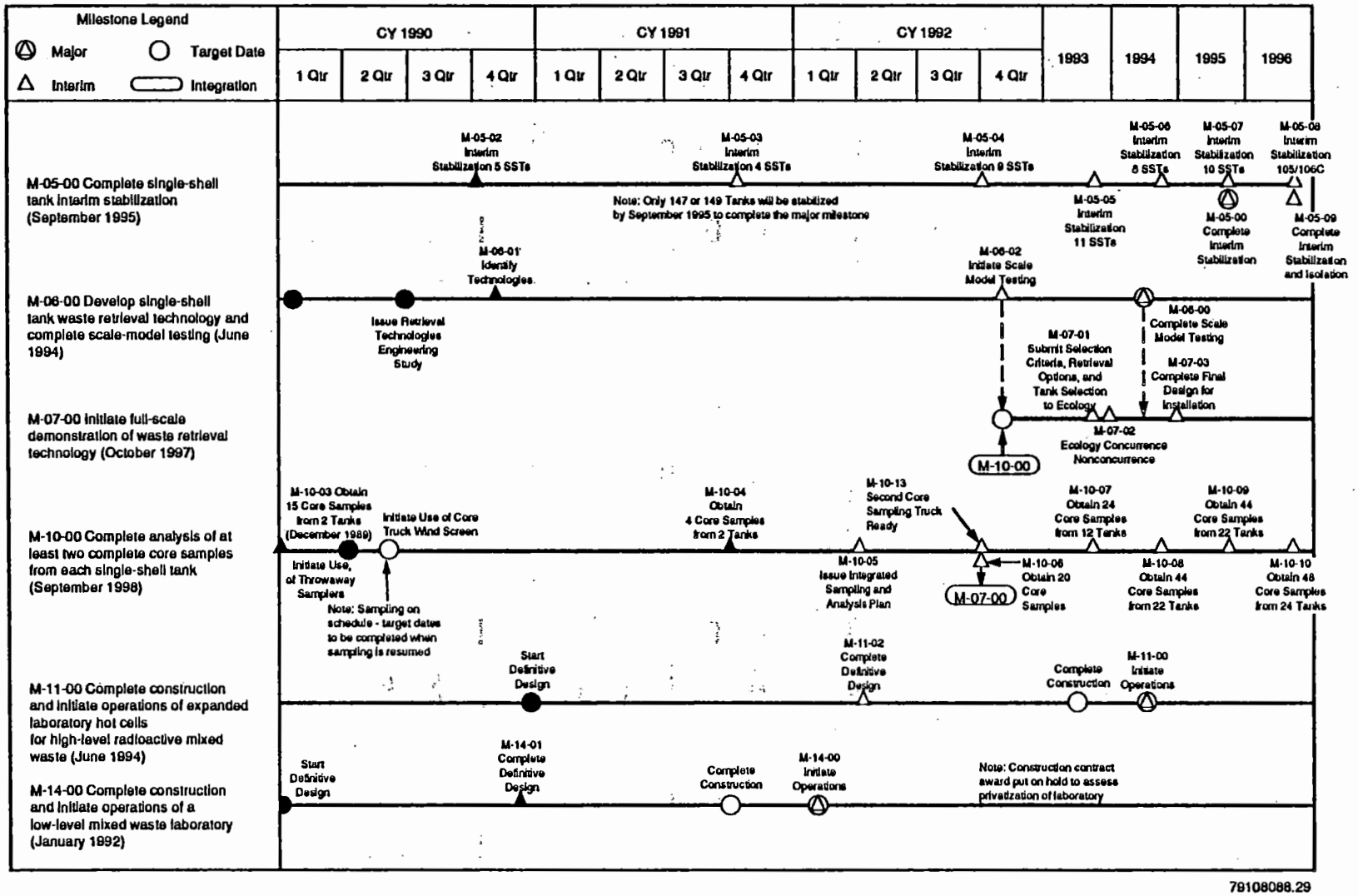

Figure 2-1. Operating Schedules for Units Managing Land Disposal Restricted Wastes. (sheet 2 of 4)

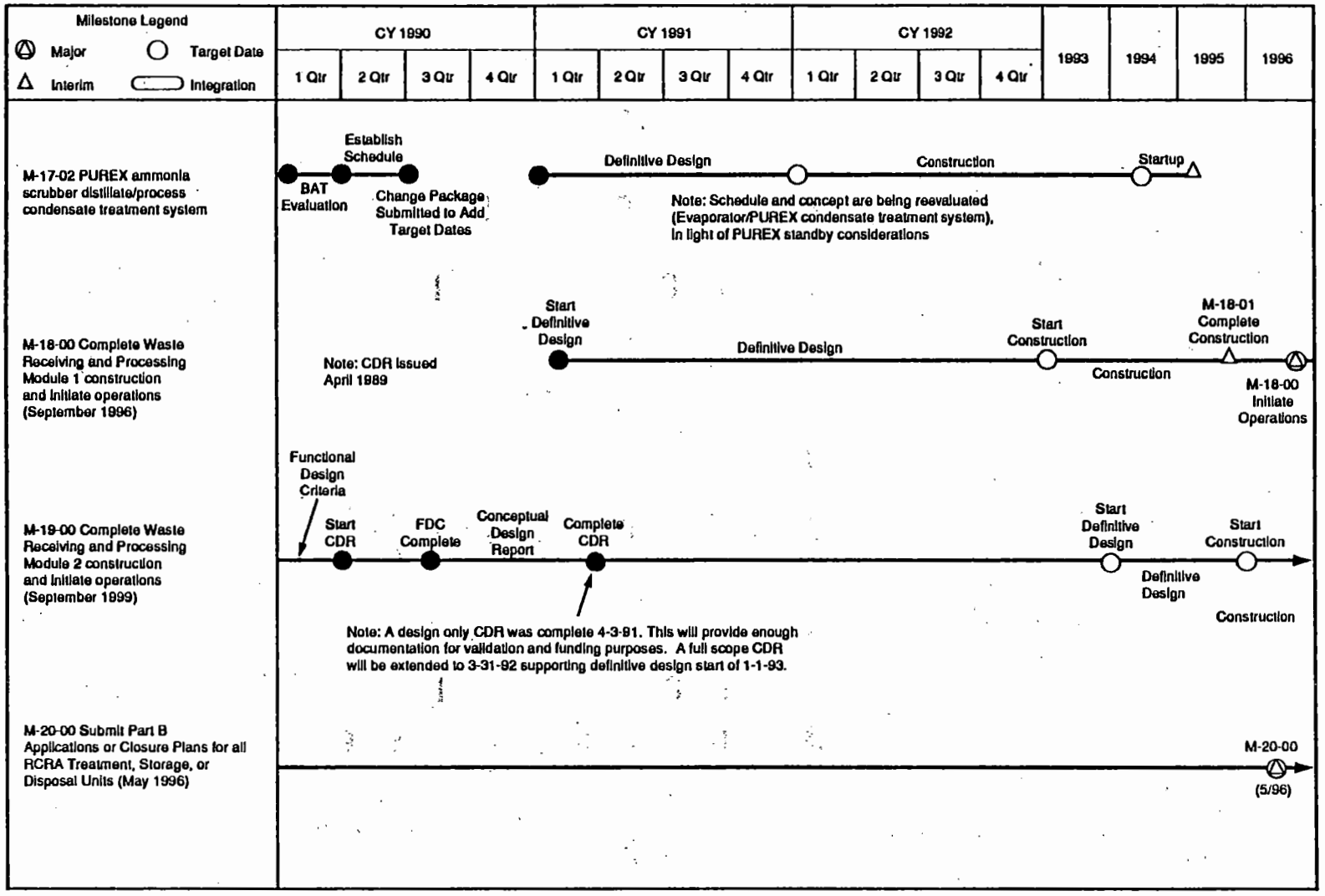

BAT best available technology
CDR conceptual design report
FDC functional design criteria
PUREX Plutonium-Uranium Extraction (Plant)
RCRA Resource Conservation and Recovery Act

Note: See detail in Figure 2-2.

79108088.30

Figure 2-1. Operating Schedules for Units Managing Land Disposal Restricted Wastes. (sheet 3 of 4)

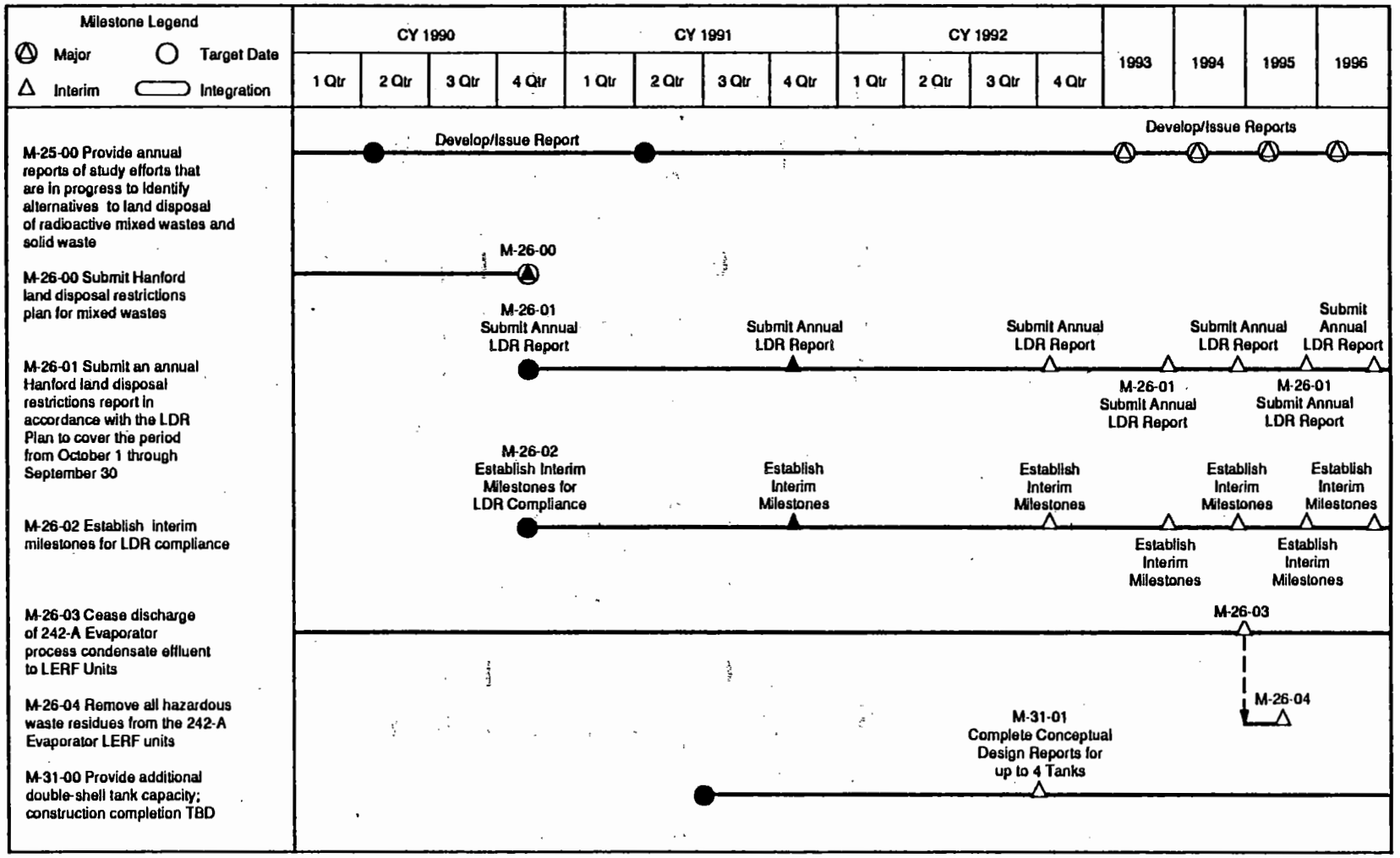

Ecology Washington State Department of Ecology
EPA U.S. Environmental Protection Agency
LDR Land Disposal Restrictions
LERF Liquid Effluent Retention Facility

Figure 2-1. Operating Schedules for Units Managing Land Disposal Restricted Wastes. (sheet 4 of 4)

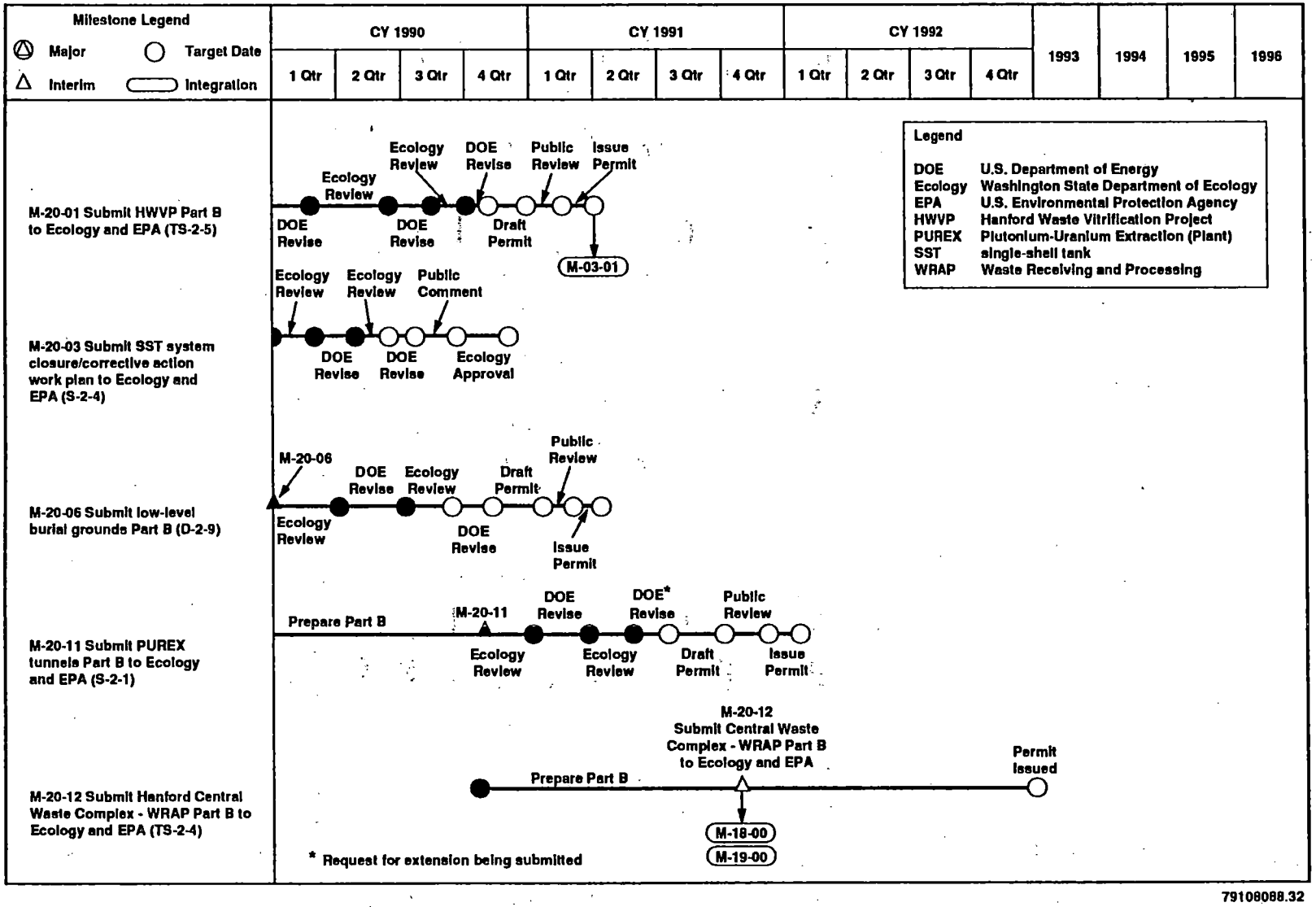

Figure 2-2. Permitting Schedules for Units Managing Land Disposal Restricted Waste. (sheet 1 of 4)

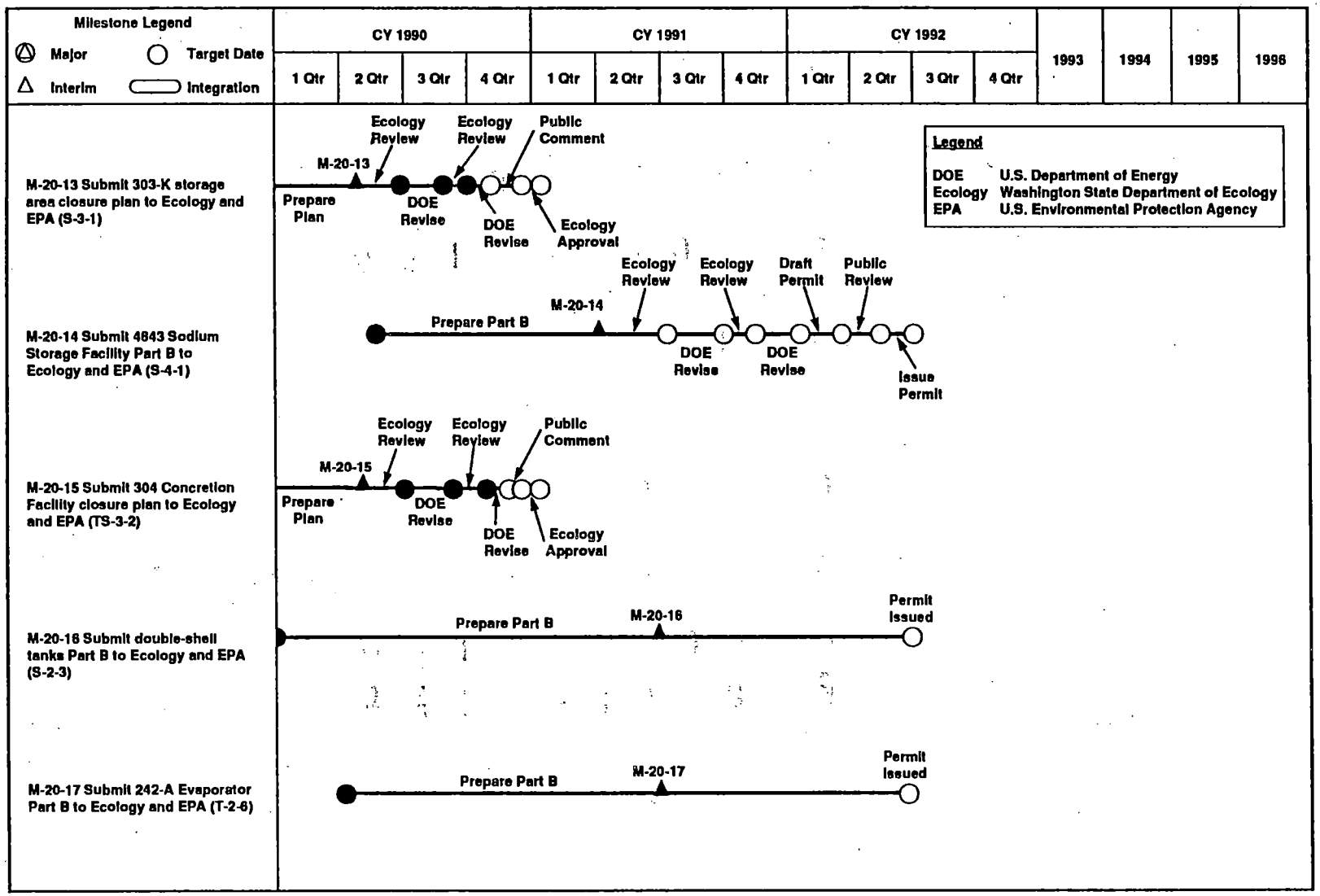

Figure 2-2. Permitting Schedules for Units Managing Land Disposal Restricted Waste. (Sheet 2 of 4)

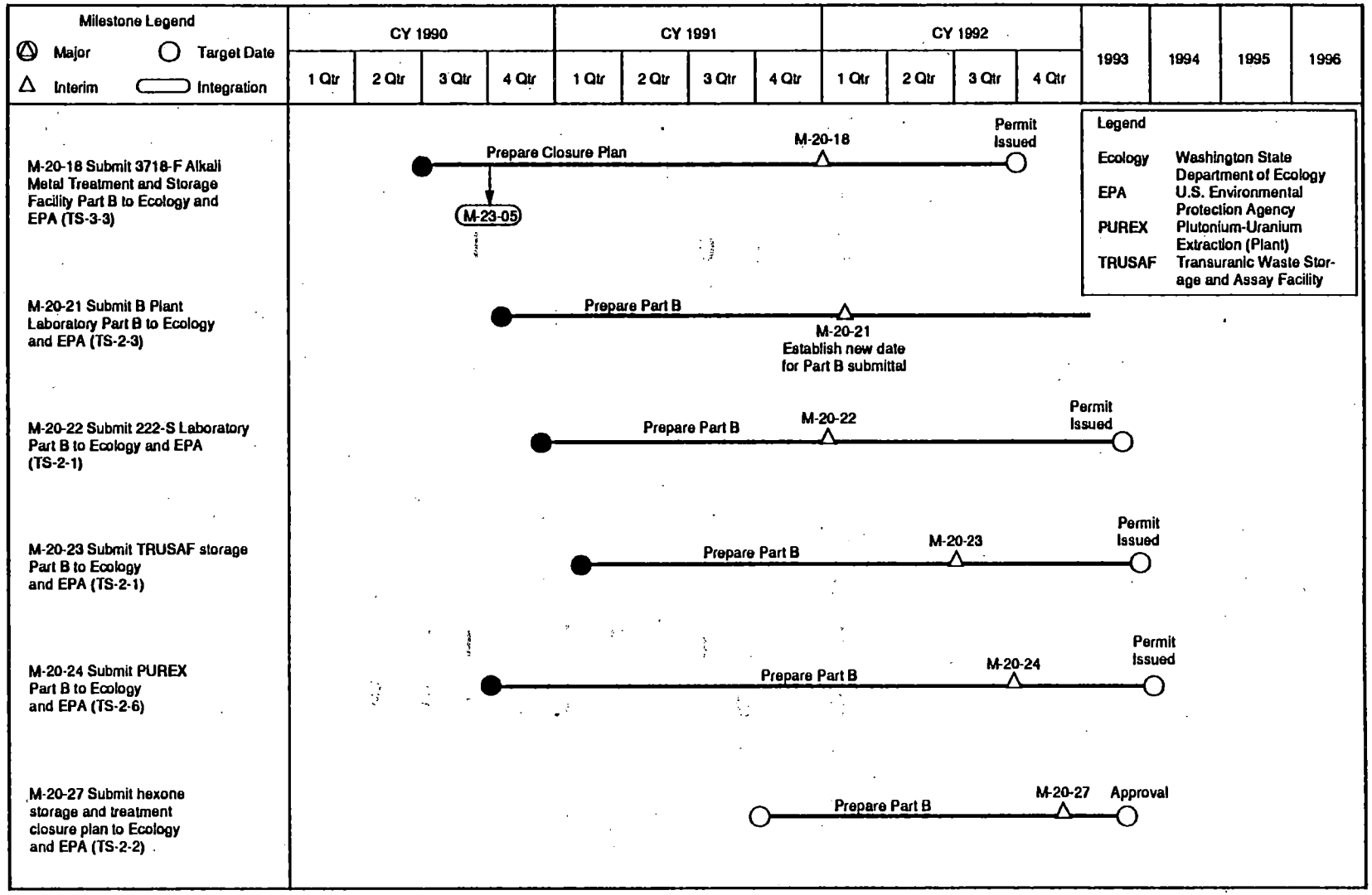

Figure 2-2. Permitting Schedules for Units Managing Land Disposal Restricted Waste. (sheet 3 of 4)

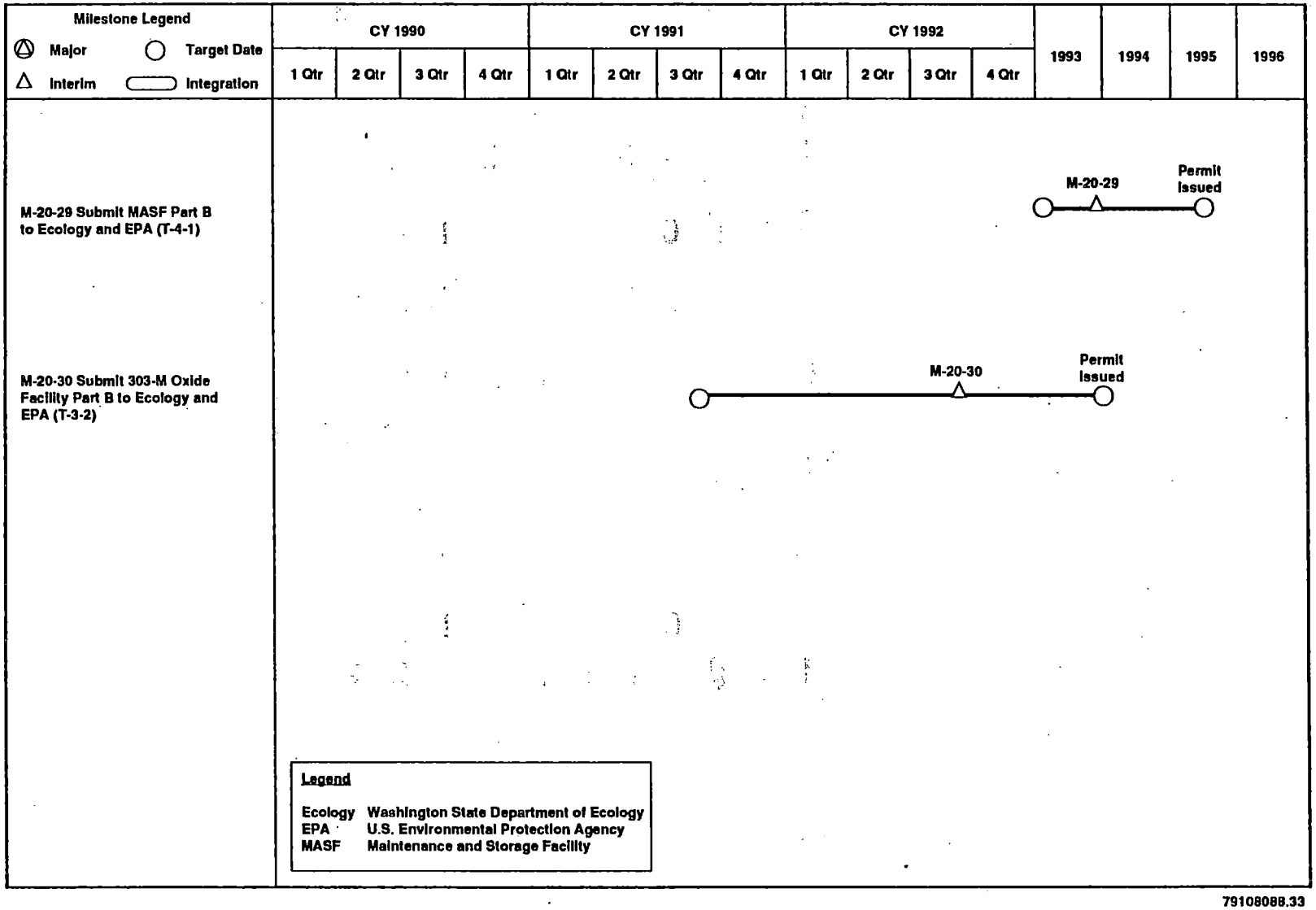

79108088.33

Figure 2-2. Permitting Schedules for Units Managing Land Disposal Restricted Waste. (sheet 4 of 4)

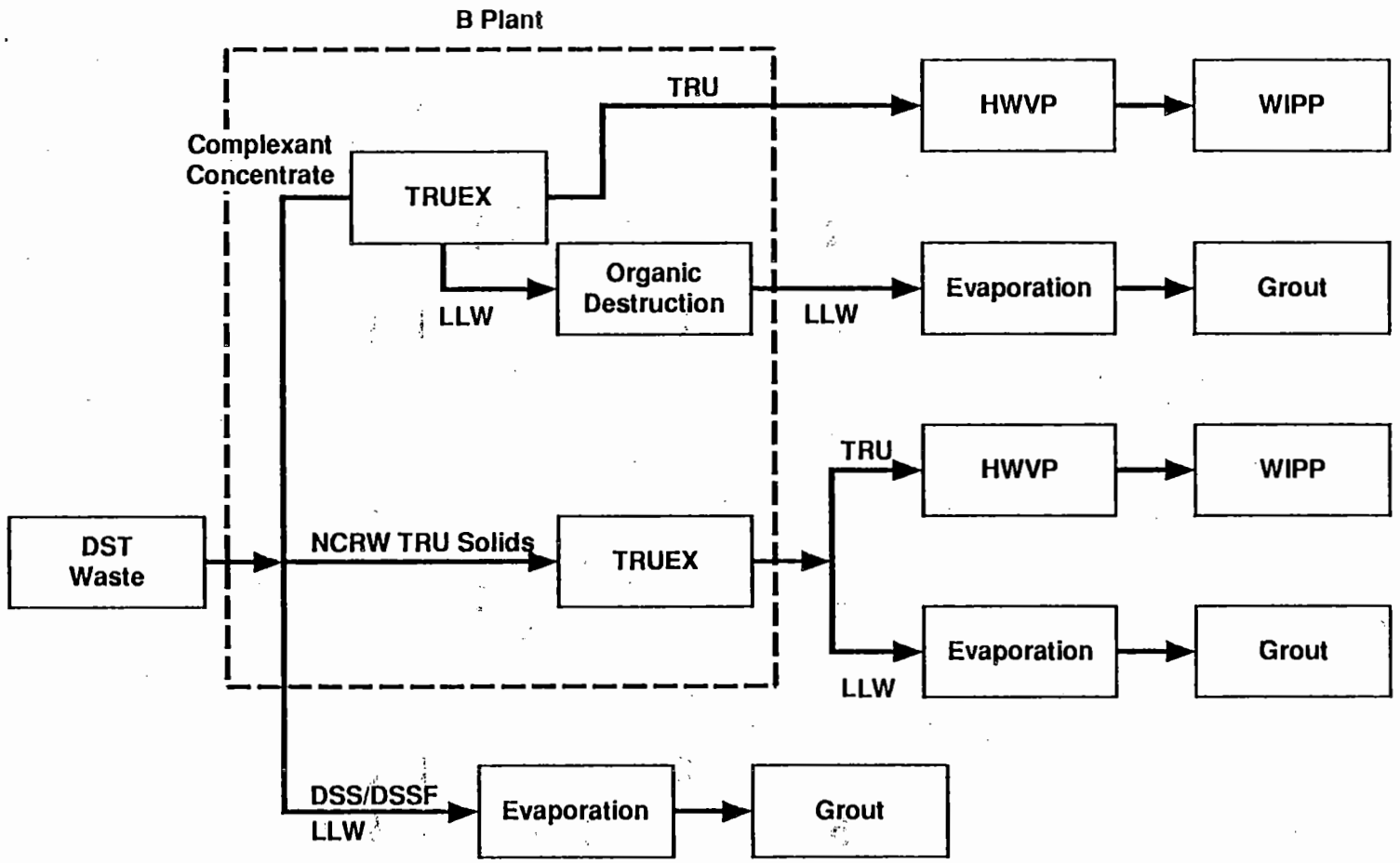

Legend

DSS	double-shell slurry
DST	double-shell tank
DSSF	double-shell slurry feed
HWVP	Hanford Waste Vitrification Plant
LLW	low-level waste
NCRW	neutralized cladding removal waste
TRU	transuranic
TUREX	transuranic extraction
WIPP	Waste Isolation Pilot Plant

79108088.21

Figure 2-3. Double-Shell Tank Waste Treatment Flow Diagram.

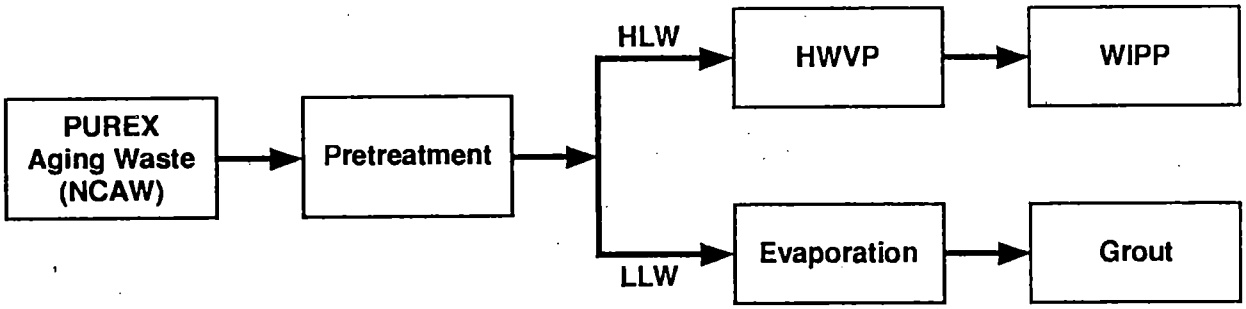

Legend

HLW	high-level waste
HWVP	Hanford Waste Vitrification Plant
LLW	low-level waste
NCAW	neutralized current acid waste
PUREX	Plutonium-Uranium Extraction (Plant)

79108088.22

Figure 2-4. Plutonium-Uranium Extraction Aging Waste Treatment Flow Diagram.

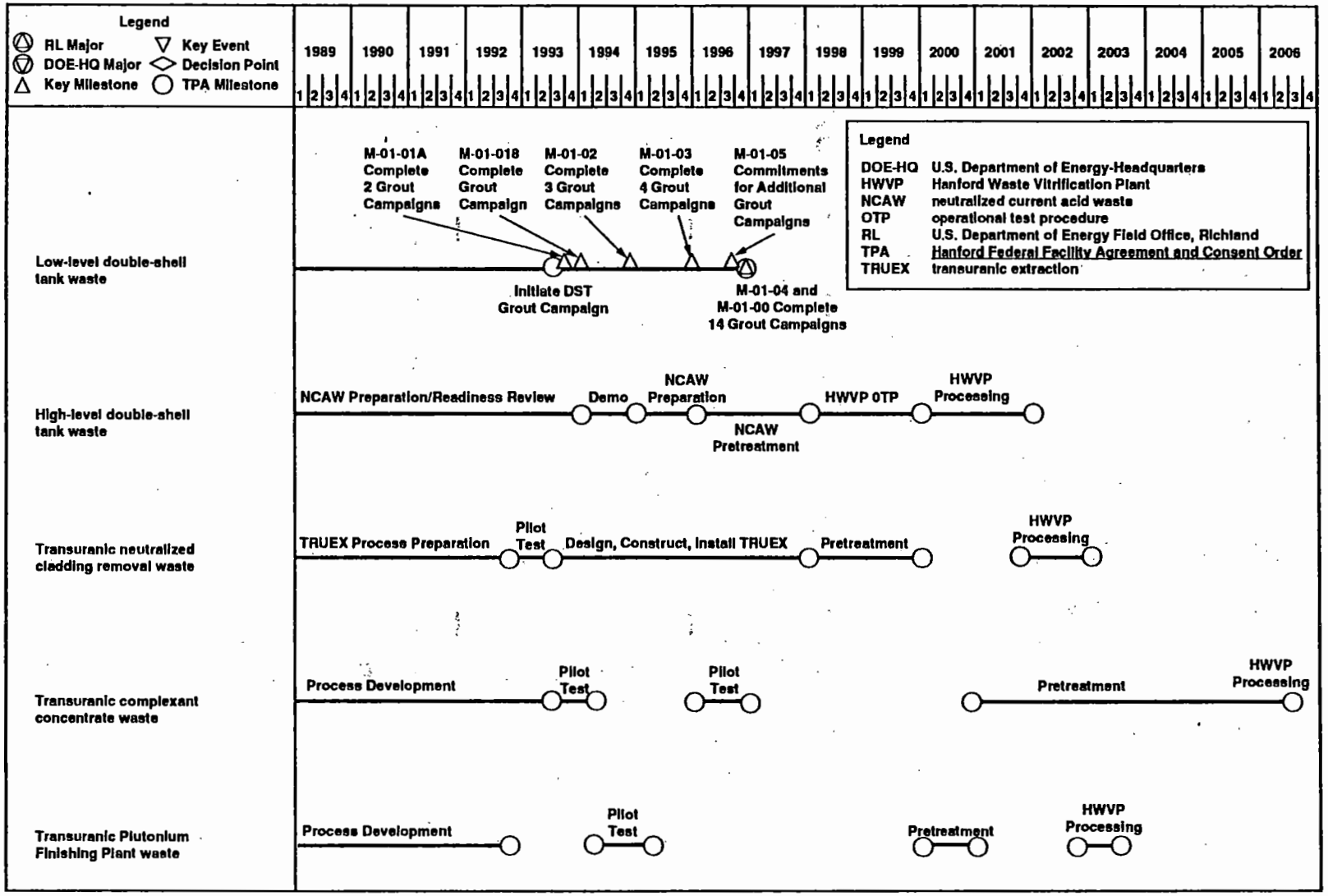

Figure 2-5. Double-Shell Tank Waste Treatment Schedule.

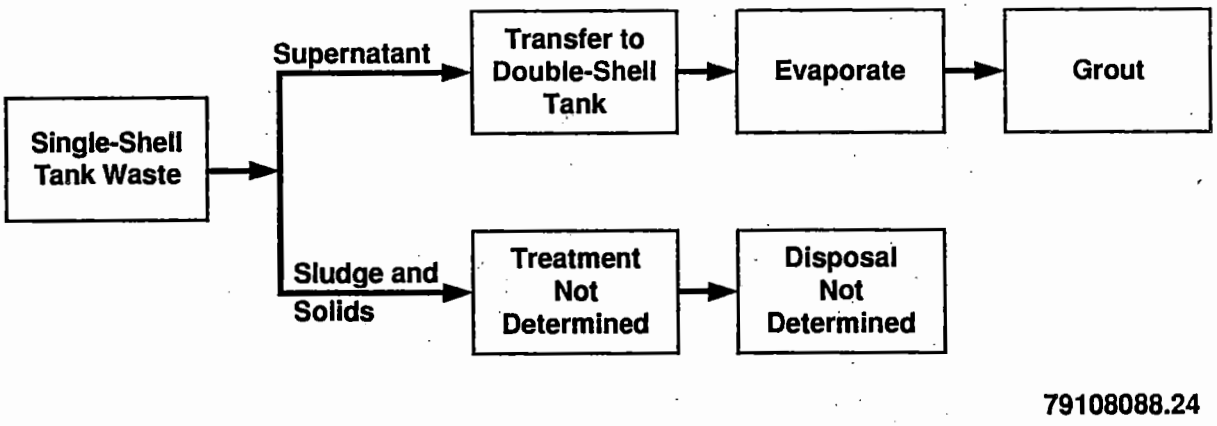

Figure 2-6. Single-Shell Tank Waste Treatment Flow Diagram.

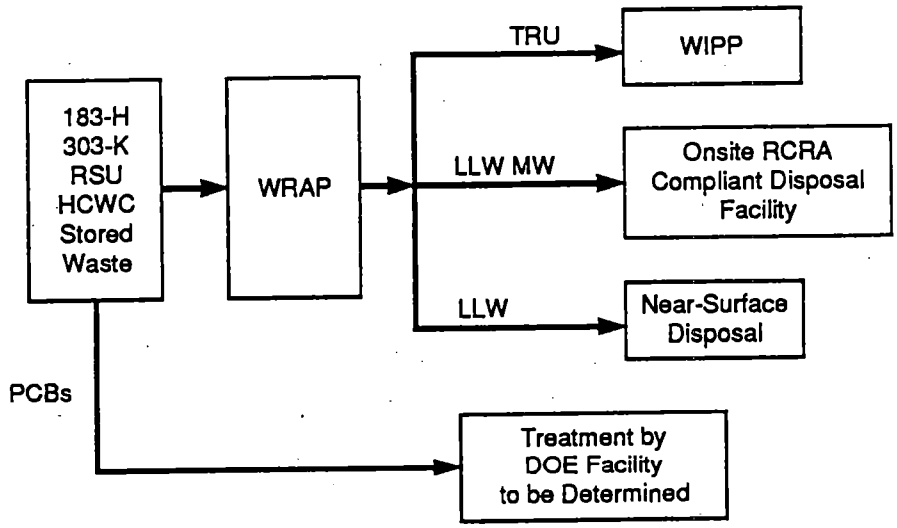

Legend

DOE	U.S. Department of Energy	RSU	retrievable storage units
HCWC	Hanford Central Waste Complex	TRU	transuranic
LLW	low-level waste	TRUSAF	Transuranic Waste Storage and Assay Facility
MW	mixed waste	WIPP	Waste Isolation Pilot Plant
PCB	polychlorinated biphenyl	WRAP	Waste Receiving and Processing
RCRA	Resource Conservation and Recovery Act		

79108088.25

Figure 2-7. Hanford Central Waste Complex Stored Waste, Retrievably Stored Waste, 183-H Solar Basin Waste, and 303-K Waste Treatment Flow Diagram.

This page intentionally left blank.

9 2 1 2 6 4 0 0 8 5 7

Table 2-1. Summary of Annual Waste Generation Projections.*

Waste stream	Projected generation (m^3)					
	1991	1992	1993	1994	1995	1996
1. Double-Shell Tank Waste (before evaporation)	13,100	12,900	12,900	12,900	12,900	12,900
2. PUREX Aging Waste	0	0	0	0	0	0
3. Single-Shell Tank Waste	0	0	0	0	0	0
4. 242-A Evaporator Process Condensate	49,000	24,000	72,000	72,000	72,000	72,000
5. 4843 Sodium Storage Facility Waste	0.21	0.21	0.21	0.21	0.21	0.21
6. PUREX Ammonia Scrubber Waste	0	0	0	0	0	0
7. PUREX Process Condensate	0	0	0	0	0	0
8. Hexone Waste	0	0	0	0	0	0
9. 183-H Solar Basin Waste	0	0	0	0	0	0
10. PUREX Storage Tunnel #2 Waste*	0	TBD	TBD	TBD	TBD	TBD
11a. PUREX Storage Tunnels #1 and #2 Waste (lead)*	0	TBD	TBD	TBD	TBD	TBD
11B. PUREX Storage Tunnels #1 and #2 Waste (silver)*	0	TBD	TBD	TBD	TBD	TBD
12. PUREX Canyon Waste* Pile (lead)	TBD	TBD	TBD	TBD	TBD	TBD
13. Hanford Central Waste Complex Stored Low-Level, Transuranic, and PCB Waste	1,127	467	535	323	3,144	TBD
14. Retrievably Stored Low-Level and Transuranic Waste	0	0	0	0	0	0
15. TRUSAF Stored Waste	(Included with HCWC waste generation)					
16. 303-K Stored Waste	0	2	0	0	0	0

NOTE: The generation of PUREX waste will be evaluated when a PUREX restart decision is made.

*These generation rates are based on the assumptions of Chapter 1.0, Section 1.2.

PUREX = Plutonium-Uranium Extraction (Facility)
TBD = to be determined
TRUSAF = Transuranic Waste Storage and Assay Facility.

9 2 1 2 6 4 0 0 8 5 8

Table 2-2. Waste Stream Characterization. (sheet 1 of 3)

Waste stream	Schedule	Method, protocol, specific analyses
1. Double-Shell Tank Waste	1990-1995 (M-23-03, Ecology et al. 1990)	• Waste analysis plan under development. • Weighted bottle method for supernate and slurry. • Core sampling for sludge. • Protocol: EPA-SW-846 (EPA 1986) with Ecology-approved deviations. • Specific analysis: physical characteristics, 33 inorganics, organics, radioisotopes.
2. PUREX Aging Waste	1989-1992	• Core samples will be characterized. Analyses to be conducted have not been determined at this time.
3. Single-Shell Tank Waste	1986-1998	• Two core samples from each tank. • Core sampling in accordance with Ecology-approved Waste Analysis Plan (Sasaki 1990). • Protocol: EP-SW-846 with Ecology-approved deviations. • Samples will be tested for several organics, inorganics, metals, isotopes, physical parameters; and for EP Toxicity, corrosivity, and when applicable, reactivity and ignitability.
4. 242-A Evaporator Process Condensate	Waste to be sampled in accordance with 242-A permit conditions (currently being developed)	• Future characterization will be negotiated among the EPA, DOE, and Ecology. • Treated stream will be characterized after treatment facility startup.
5. 4843 Sodium Storage Facility Waste	No future characterization is planned	• Treated waste will be characterized to confirm it is no longer designated dangerous.
6. PUREX Ammonia Scrubber Waste	1990-1995, with other DST waste	• Waste analysis plan under development (M-23-03, Ecology et al. 1990).

Table 2-2. Waste Stream Characterization. (sheet 2 of 3)

Waste stream	Schedule	Method, protocol, specific analyses
7. PUREX Process Condensate	1990-1995, with other DST waste	• Waste analysis plan under development (M-23-03, Ecology et al. 1990).
8. Hexone Waste	Waste characterization complete	• Distillation residue will be characterized before disposal.
9. 183-H Solar Basin Waste	Waste characterization complete	• Characterization details contained in DOE-RL (1990a).
10. PUREX Storage Tunnel #2 Waste (mercury)	Waste characterization complete	• Characterization details contained in DOE-RL (1990b).
11a. PUREX Storage Tunnels #1 and #2 Waste (lead)	Waste characterization complete	• Characterization details contained in DOE-RL (1990b).
11b. PUREX Storage Tunnels #1 and #2 Waste (silver)	Waste characterization complete	• Characterization details contained in DOE-RL (1990b).
12. PUREX Canyon Waste Pile (lead)	No further characterization is planned	
13. Hanford Central Waste Complex Stored, Low-Level, Transuranic, and PCB Waste	Waste will be characterized before treatment beginning 1996 (WRAP Module 1)	• TBD.

Table 2-2. Waste Stream Characterization. (sheet 3 of 3)

Waste stream	Schedule	Method, protocol, specific analyses
14. Retrievably Stored Low-Level and Transuranic Waste	• In situ characterization 1991-1994 • Waste will be characterized before disposal after processing at WRAP Facility	• Real-time radiography will help identify liquids and lead in pre-1980 drums. • Gas within containers will be sampled and analyzed to ascertain whether explosive gas mixtures are present.
15. TRUSAF Stored Waste	No further characterization is planned	• Certified and shipped to the Waste Isolation Pilot Plant.
16. 303-K Stored Waste	No further characterization is planned	

DOE = U.S. Department of Energy
DST = double-shell tank
Ecology = Washington State Department of Ecology
EPA = U.S. Environmental Protection Agency
PCB = polychlorinated biphenyl
PUREX = Plutonium-Uranium Extraction (Facility)
WRAP = Waste Receiving and Processing (Facility)
TBD = to be determined
TRUSAF = Transuranic Waste Storage and Assay Facility.

Table 2-3. Hazardous Waste Designations of Plan Waste Streams.[a]
(sheet 1 of 4)

Waste stream	Designated waste code(s)
1. Double-Shell Tank Waste[b]	D001 (ignitable)[a,c] D002 (corrosive) D004 (TCLP arsenic) D005 (TCLP barium) D006 (TCLP cadmium) D007 (TCLP chromium) D008 (TCLP lead) D009 (TCLP mercury) D010 (TCLP selenium) D011 (TCLP silver) F003 (acetone and hexone) WC01 (carcinogenic)[c] WC02 (carcinogenic)[c] WP01 (persistent)[c] WP02 (persistent)[c] WT01 (toxic)[c] WT02 (toxic)[c]
2. PUREX Aging Waste	D001 (ignitable)[a,c] D002 (corrosive) D006 (TCLP cadmium) D007 (TCLP chromium) D008 (TCLP lead)[c]
3. Single-Shell Tank Waste	D001 (ignitable) D002 (corrosive) D005 (TCLP barium) D006 (TCLP cadmium) D007 (TCLP chromium) D008 (TCLP lead) D009 (TCLP mercury) D010 (TCLP selenium) D011 (TCLP silver) D019 (TCLP carbon tetrachloride) F003 (acetone and hexone) WT01 (toxic)
4. 242-A Evaporator Process Condensate	F003 (acetone and hexone) F005 (methyl ethyl ketone) WT02 (toxic)
5. 4843 Sodium Storage Facility	D003 (reactive)
6. PUREX Ammonia Scrubber Waste	D002 (corrosive) WT02 (toxic)
7. PUREX Process Condensate	D002 (corrosive) WT02 (toxic)
8. Hexone Waste	F003 (hexone) WT02 (toxic)

Table 2-3. Hazardous Waste Designations of Plan Waste Streams.[a]
(sheet 2 of 4)

Waste stream	Designated waste code(s)
9. 183-H Solar Basin Waste[d]	D001 (ignitable) D007 (TCLP chromium) P029 (copper cyanides) P030 (soluble cyanide salts) P098 (potassium cyanide) P106 (sodium cyanide) P120 (vanadium pentoxide) U123 (formic acid) WT01 (toxic) WT02 (toxic)
10. PUREX Storage Tunnel #2 Waste (mercury)	D009 (TCLP mercury) WT01 (toxic)
11a. PUREX Storage Tunnels #1 and #2 Waste (lead)	D008 (TCLP lead) WT01 (toxic)
11b. PUREX Storage Tunnels #1 and #2 Waste (silver)	D001 (ignitable) D011 (TCLP silver) WT01 (toxic)
12. PUREX Canyon Waste Pile	D008 (TCLP lead) WT01 (toxic)
13. Hanford Central Waste Complex Stored, Low-Level, Transuranic, and radioactive PCB Waste	D001 (ignitable)[a,c] D002 (corrosive) D003 (reactive) D004 (TCLP arsenic) D005 (TCLP barium) D006 (TCLP cadmium) D007 (TCLP chromium) D008 (TCLP lead) D009 (TCLP mercury) D010 (TCLP selenium) D011 (TCLP silver) D012 (TCLP Endrin) D016 (TCLP 2,4-D) F001 (spent halogenated degreasing solvents) F002 (spent halogenated solvents) F003 (acetone) F004 (cresols) F005 (spent non-halogenated solvents)

9 2 1 2 6 4 0 0 8 6 3

Table 2-3. Hazardous Waste Designations of Plan Waste Streams.[a]
(sheet 3 of 4)

Waste stream	Designated waste code(s)
13. Hanford Central Waste Complex Stored, Low-Level, Transuranic, and radioactive PCB Waste (cont)	P029 (copper cyanides) P030 (soluble cyanide salts) P098 (potassium cyanide) P106 (sodium cyanide) P120 (vanadium pentoxide) U080 (dichloromethane) U123 (formic acid) U161 (methylisobutylketone) W001 (PCBs) WC01 (carcinogenic) WC02 (carcinogenic) WP01 (persistent) WP02 (persistent dangerous waste) WP03 (polycyclic) WT01 (toxic) WT02 (toxic)
14. Retrievably Stored Low-Level, Transuranic, and PCB Waste	D001 (ignitable)[a,c] D003 (reactive) D005 (TCLP barium) D006 (TCLP cadmium) D007 (TCLP chromium) D008 (TCLP lead) D009 (TCLP mercury) D011 (TCLP silver) F001 (spent halogenated degreasing solvents) F003 (acetone) F005 (spent non-halogenated solvents) P015 (beryllium dust) WC01 (carcinogenic) WC02 (carcinogenic) WP01 (persistent) WP03 (polycyclic) WT01 (toxic) WT02 (toxic)
15. TRUSAF Stored Waste	D002 (corrosive) D005 (TCLP barium) D006 (TCLP cadmium) D007 (TCLP chromium) D008 (TCLP lead) D009 (TCLP mercury) WC01 (carcinogenic) WC02 (carcinogenic) WP01 (persistent) WT01 (toxic)

9 2 1 2 6 4 0 0 8 6 4

Table 2-3. Hazardous Waste Designations of Plan Waste Streams.[a]
(sheet 4 of 4)

Waste stream	Designated waste code(s)
16. 303-K Stored Waste	D001 (ignitable) D002 (corrosive) D006 (TCLP cadmium) F001 (spent halogenated degreasing solvents) F003 (spent non-halogenated solvents) WC01 (carcinogenic) WP01 (persistent) WT01 (toxic) WT02 (toxic)

[a]Further information is given in Section 2.2.

[b]Double-shell tank complexant concentrate also has the characteristic of reactivity (D003).

[c]Designation is based on process knowledge; waste has not been tested.

[d]This waste has been removed and transferred to the Hanford Central Waste Complex (waste stream 13).

PCB = polychlorinated biphenyl
PUREX = Plutonium-Uranium Extraction (Facility)
TCLP = toxic characteristic leach procedure
TRUSAF = Transuranic Waste Storage and Assay Facility.

Table 2-4. Storage Unit Characteristics. (sheet 1 of 2)

Waste stream	Facility	Capacity (m^3)	Anticipated capacity fill date	Compliance date	Part B submittal date	Release of hazardous constituents
1. Double-Shell Tank Waste	DSTs	111,800	1993	c	6/91	none
2. PUREX Aging Waste	DSTs	7,600	1993	c	6/91	none
3. Single-Shell Tank Waste	SSTs	357,500[e]	n/a[a]	facility closure	1/90	yes (Table 3-6)
4. 242-A Evaporator Process Condensate	LERF	49,000	1991	c	6/91	none
5. 4843 Sodium Storage Facility Waste	4843 Building	84,000 kg	n/a[a]	c	3/91	none
6. PUREX Ammonia Scrubber Waste	DSTs	111,800	n/a[a]	c	6/91	none
7. PUREX Process Condensate	DSTs	111,800	n/a[a]	c	6/91	none
8. Hexone Waste	276-S-141 276-S-142	178[e]	n/a[a]	facility closure	11/92	none
9. 183-H Solar Basin Waste	183-H Basins	8,200[e]	n/a[a]	facility closure	6/89	yes
10. PUREX Storage Tunnel #2 Waste (mercury)	PUREX Tunnel 2	f	n/a[b]	c	9/90	none
11a. PUREX Storage Tunnels #1 and #2 Waste (lead)	PUREX Tunnels 1, 2	f	n/a[b]	c	9/90	none
11b. PUREX Storage Tunnels #1 and #2 Waste (silver)	PUREX Tunnel 2	f	n/a[b]	c	9/90	none
12. PUREX Canyon Waste Pile	PUREX canyon	---	n/a[b]	c	9/92	none
13. Hanford Central Waste Complex Stored Low-Level, Transuranic, and PCB Waste	Various	14,450	1996	c	10/91	none
14. Retrievably Stored Low-Level and Transuranic Wastes	Various	15,440[e]	n/a[a]	2/91[c,d]	10/91	none

Table 2-4. Storage Unit Characteristics. (sheet 2 of 2)

Waste stream	Facility	Capacity (m^3)	Anticipated capacity fill date	Compliance date	Part B submittal date	Release of hazardous constituents
15. TRUSAF Stored Waste	224-T Building	420	n/a[b]	c	6/92	none
16. 303-K Stored Waste	303-K Building	42[e]	n/a[a]	c	6/90	none

[a]Not applicable - no future generation, or no significant generation (303-K), of this waste.
[b]Capacity is sufficient for all future generation.
[c]Outstanding interim status corrective actions have been completed.
[d]Excluding groundwater monitoring wells.
[e]This unit is no longer used for active storage; capacity noted is for information only.
[f]PUREX Storage Tunnel #1 has a total capacity for 8 railcars, equivalent to 600 cubic meters, and is filled. PUREX Storage Tunnel #2 has a total capacity for 40 railcars, equivalent to 3,080 cubic meters, and currently contains 17 railcars or 1,360 cubic meters. The total capacity of both tunnels is 3,680 cubic meters with 1,720 cubic meters unfilled.

DST = double-shell tank
LERF = Liquid Effluent Retention Facility
n/a = not applicable
PCB = polychlorinated biphenyl
PUREX = Plutonium-Uranium Extraction (Facility)
SST = single-shell tank
TRUSAF = Transuranic Waste Storage and Assay Facility.

Table 2-5. Stored Waste Characteristics. (sheet 1 of 2)

Waste stream	Facility	Amount in storage (m^3)	Date first waste in storage	Liquid %	Solid %	Sludge %	LLW	TRU/LLW	HLW
1. Double-Shell Tank Waste	DSTs	73,939[a]	1975	80	11	9	b	b	b
2. PUREX Aging Waste	DSTs	7,245[a]	1975	93	0	7	0	0	100
3. Single-Shell Tank Waste	SST	139,500	1944	31	44	25	n/a	n/a	n/a
4. 242-A Evaporator Process Condensate	LERF	none		100	0	0	100	0	0
5. 4843 Sodium Storage Facility Waste	4843 Building	1,009 kg	1986	0	100	0	100	0	0
6. PUREX Ammonia Scrubber Waste	DSTs	5,900[a]	1987	100	0	0	100	0	0
7. PUREX Process Condensate	DSTs	4,800[a]	1989	100	0	0	100	0	0
8. Hexone Waste	276-S-141	137	1951	99.7	0	0.3	100	0	0
9. 183-H Solar Basin Waste	183-H Basins	128	1973	20	80	0	100	0	0
10. PUREX Storage Tunnel #2 Waste (mercury)	PUREX Tunnel 2	0.01[c]	1971	100	0	0	100	0	0
11a. PUREX Storage Tunnels #1 and #2 Waste (lead)	PUREX Tunnel 1 PUREX Tunnel 2	0.26[c]	1960	0	100	0	100	0	0
11b. PUREX Storage Tunnels #1 and #2 Waste (silver)	PUREX Tunnel 2	0.17[c]	1971	0	100	0	100	0	0
12. PUREX Canyon Waste Pile	PUREX Plant	0.25	1987	0	100	0	100	0	0
13. Hanford Central Waste Stored Low-Level, Transuranic, and PCB Waste	Various	2,077	1988	n/a	n/a	n/a	95	5	0
14. Retrievably Stored Low-Level and Transuranic Wastes	Various	978	1970	n/a	n/a	n/a	78	22	0

Table 2-5. Stored Waste Characteristics. (sheet 2 of 2)

Waste stream	Facility	Amount in storage (m^3)	Date first waste in storage	Liquid %	Solid %	Sludge %	LLW	TRU/LLW	HLW
15. TRUSAF Stored Waste	224-T Bldg	43	1985	0	100	0	0	100	0
16. 303-K Stored Waste	303-K Bldg	1,203 kg	1943	0	100	0	100	0	0

[a]Inventories for PUREX Ammonia Scrubber Waste and PUREX Process Condensate also are included in the DST Waste inventory. PUREX Aging Waste is not included in the DST Waste inventory. The total DST Waste inventory is 81,184 cubic meters.

[b]Double-shell tank waste contains LLW, TRU, and HLW. However, in the interim storage mode, all DST waste is managed as HLW.

[c]These are the actual waste volumes. The wastes are in railcars with 600 cubic meters in storage in Tunnel #1 and 1,360 cubic meters in storage in Tunnel #2 (railcars included).

DST = double-shell tank
HLW = high-level waste
LERF = Liquid Effluent Retention Facility
LLW = low-level waste
n/a = not applicable
PUREX = Plutonium-Uranium Extraction (Facility)
SST = single-shell tank
TRU = transuranic (waste)
TRUSAF = Transuranic Waste Storage and Assay Facility.

Table 2-6. Treatment of Land Disposal Restricted Waste for Disposal. (sheet 1 of 13)

Wastes codes	Required treatment[a]	Planned treatment	Treatment facility	Facility capacity (m^3/day)	Disposal facility	Treat-ment date
1. Double-Shell Tank Waste Pretreated Complexant Concentrate Waste (transuranic fraction)						
F003	CCWE	vitrification	HWVP	33	WIPP	2004
D001	deactivation	vitrification	HWVP	33	WIPP	2004
D002	deactivation	vitrification	HWVP	33	WIPP	2004
D004	CCWE	vitrification	HWVP	33	WIPP	2004
D005	CCWE	vitrification	HWVP	33	WIPP	2004
D006	CCWE	vitrification	HWVP	33	WIPP	2004
D007	CCWE	vitrification	HWVP	33	WIPP	2004
D008	CCWE	vitrification	HWVP	33	WIPP	2004
D009	CCWE	vitrification	HWVP	33	WIPP	2004
D010	CCWE	vitrification	HWVP	33	WIPP	2004
D011	CCWE	vitrification	HWVP	33	WIPP	2004
WT01	reduction	vitrification	HWVP	33	WIPP	2004
WT02	none	vitrification	HWVP	33	WIPP	2004
WC01	reduction	vitrification	HWVP	33	WIPP	2004
WC02	none	vitrification	HWVP	33	WIPP	2004
WP01	reduction	vitrification	HWVP	33	WIPP	2004
WP02	none	vitrification	HWVP	33	WIPP	2004
Pretreated Complexed Concentrate Waste (low-level fraction)						
F003	CCWE	evaporation	242-A	870	none[b]	2001[c]
D001	deactivation	grout	GTF	382	GTF	2001[c]

9 2 1 2 6 4 0 0 8 7 0

Table 2-6. Treatment of Land Disposal Restricted Waste for Disposal. (sheet 2 of 13)

Wastes codes	Required treatment[a]	Planned treatment	Treatment facility	Facility capacity (m^3/day)	Disposal facility	Treat-ment date
D002	deactivation	grout	GTF	382	GTF	2001[c]
D004	CCWE	grout	GTF	382	GTF	2001[c]
D005	CCWE	grout	GTF	382	GTF	2001[c]
D006	CCWE	grout	GTF	382	GTF	2001[c]
D007	CCWE	grout	GTF	382	GTF	2001[c]
D008	CCWE	grout	GTF	382	GTF	2001[c]
D009	CCWE	grout	GTF	382	GTF	2001[c]
D010	CCWE	grout	GTF	382	GTF	2001[c]
D011	CCWE	grout	GTF	382	GTF	2001[c]
WT01	Reduction	grout	GTF	382	GTF	2001[c]
WT02	None	grout	GTF	382	GTF	2001[c]
WC01	Reduction	grout	GTF	382	GTF	2001[c]
WC02	None	grout	GTF	382	GTF	2001[c]
WP01	Reduction	grout	GTF	382	GTF	2001[c]
WP02	None	grout	GTF	382	GTF	2001[c]
Pretreated Neutralized Cladding Removal Waste (transuranic fraction)						
F003	CCWE	vitrification	HWVP	33	WIPP	2002
D001	deactivation	vitrification	HWVP	33	WIPP	2002
D002	deactivation	vitrification	HWVP	33	WIPP	2002
D004	CCWE	vitrification	HWVP	33	WIPP	2002

9 2 1 2 6 4 0 0 8 7 1

Table 2-6. Treatment of Land Disposal Restricted Waste for Disposal. (sheet 3 of 13)

Wastes codes	Required treatment[a]	Planned treatment	Treatment facility	Facility capacity (m^3/day)	Disposal facility	Treat-ment date
D005	CCWE	vitrification	HWVP	33	WIPP	2002
D006	CCWE	vitrification	HWVP	33	WIPP	2002
D007	CCWE	vitrification	HWVP	33	WIPP	2002
D008	CCWE	vitrification	HWVP	33	WIPP	2002
D009	CCWE	vitrification	HWVP	33	WIPP	2002
D010	CCWE	vitrification	HWVP	33	WIPP	2002
D011	CCWE	vitrification	HWVP	33	WIPP	2002
WT01	reduction	vitrification	HWVP	33	WIPP	2002
WT02	none	vitrification	HWVP	33	WIPP	2002
WC01	reduction	vitrification	HWVP	33	WIPP	2002
WC02	none	vitrification	HWVP	33	WIPP	2002
WP01	reduction	vitrification	HWVP	33	WIPP	2002
WP02	none	vitrification	HWVP	33	WIPP	2002
Pretreated Neutralized Cladding Removal Waste (Low-Level Fraction)						
F003	CCWE	evaporation	242-A	870	none[b]	1998[c]
D001	deactivation	grout	GTF	382	GTF	1998[c]
D002	deactivation	grout	GTF	382	GTF	1998[c]
D004	CCWE	grout	GTF	382	GTF	1998[c]
D005	CCWE	grout	GTF	382	GTF	1998[c]

9 2 1 2 6 4 0 0 8 7 2

Table 2-6. Treatment of Land Disposal Restricted Waste for Disposal. (sheet 4 of 13)

Wastes codes	Required treatment[a]	Planned treatment	Treatment facility	Facility capacity (m^3/day)	Disposal facility	Treat-ment date
D006	CCWE	grout	GTF	382	GTF	1998[c]
D007	CCWE	grout	GTF	382	GTF	1998[c]
D008	CCWE	grout	GTF	382	GTF	1998[c]
D009	CCWE	grout	GTF	382	GTF	1998[c]
D010	CCWE	grout	GTF	382	GTF	1998[c]
D011	CCWE	grout	GTF	382	GTF	1998[c]
WT01	CCWE	grout	GTF	382	GTF	1998[c]
WT02	CCWE	grout	GTF	382	GTF	1998[c]
WC01	CCWE	grout	GTF	382	GTF	1998[c]
WC02	CCWE	grout	GTF	382	GTF	1998[c]
WP01	CCWE	grout	GTF	382	GTF	1998[c]
WP02	CCWE	grout	GTF	382	GTF	1998[c]
Double-Shell Slurry Feed And Double-Shell Slurry						
F003	CCWE	evaporation	242-A	870	none[b]	1970[c]
D001	deactivation	grout	GTF	382	GTF	1991[c]
D002	deactivation	grout	GTF	382	GTF	1991[c]
D004	CCWE	grout	GTF	382	GTF	1991[c]
D005	CCWE	grout	GTF	382	GTF	1991[c]
D006	CCWE	grout	GTF	382	GTF	1991[c]
D007	CCWE	grout	GTF	382	GTF	1991[c]
D008	CCWE	grout	GTF	382	GTF	1991[c]
D009	CCWE	grout	GTF	382	GTF	1991[c]

9 2 1 2 6 4 0 0 8 7 3

Table 2-6. Treatment of Land Disposal Restricted Waste for Disposal. (sheet 5 of 13)

Wastes codes	Required treatment[a]	Planned treatment	Treatment facility	Facility capacity (m^3/day)	Disposal facility	Treat-ment date
D010	CCWE	grout	GTF	382	GTF	1991[c]
D011	CCWE	grout	GTF	382	GTF	1991[c]
WT01	CCWE	grout	GTF	382	GTF	1991[c]
WT02	CCWE	grout	GTF	382	GTF	1991[c]
WC01	CCWE	grout	GTF	382	GTF	1991[c]
WC02	CCWE	grout	GTF	382	GTF	1991[c]
WP01	CCWE	grout	GTF	382	GTF	1991[c]
WP02	CCWE	grout	GTF	382	GTF	1991[c]
2. PUREX Aging Waste High-Level Fraction						
D001	deactivation	vitrification	HWVP	33	repository	2000
D002	vitrification	vitrification	HWVP	33	repository	2000
D006	vitrification	vitrification	HWVP	33	repository	2000
D007	vitrification	vitrification	HWVP	33	repository	2000
D008	vitrification	vitrification	HWVP	33	repository	2000
Low-Level Waste						
D001	deactivation	grout	GTF	382	GTF	1995[c]
D002	deactivation	grout	GTF	382	GTF	1995[c]
D006	CCWE	grout	GTF	382	GTF	1995[c]
D007	CCWE	grout	GTF	382	GTF	1995[c]
D008	CCWE	grout	GTF	382	GTF	1995[c]

9 2 1 2 6 4 0 0 8 7 4

Table 2-6. Treatment of Land Disposal Restricted Waste for Disposal. (sheet 6 of 13)

Wastes codes	Required treatment[a]	Planned treatment	Treatment facility	Facility capacity (m^3/day)	Disposal facility	Treat-ment date
3. Single-Shell Tank Waste Liquid Single-Shell Tank Waste						
F003	CCWE	evaporation	242-A	870	none[b]	1991[c]
D001	deactivation	grout	GTF	382	GTF	1991[c]
D002	deactivation	grout	GTF	382	GTF	1991[c]
D005	CCWE	grout	GTF	382	GTF	1991[c]
D006	CCWE	grout	GTF	382	GTF	1991[c]
D007	CCWE	grout	GTF	382	GTF	1991[c]
D008	CCWE	grout	GTF	382	GTF	1991[c]
D009	CCWE	grout	GTF	382	GTF	1991[c]
D010	CCWE	grout	GTF	382	GTF	1991[c]
D011	CCWE	grout	GTF	382	GTF	1991[c]
D019	CCWE	evaporation	242-A	870	none[b]	1991[c]
Non-Liquid Single-Shell Tank Waste Treatment						
Treatment not selected.						
4. 242-A Evaporator Process Condensate						
F003	CCWE	destruction	ETF	TBD	SALDS	1993
F005	CCWE	destruction	ETF	TBD	SALDS	1993
WT02	none	removal	ETF	TBD	SALDS	1993
5. 4843 Sodium Storage Facility Waste						
D003	deactivation	deactivation	TBD	TBD	LLBG	TBD
6. PUREX Ammonia Scrubber Waste						
Included with LLW DST wastes.						

9 2 1 2 6 4 0 0 8 7 5

Table 2-6. Treatment of Land Disposal Restricted Waste for Disposal. (sheet 7 of 13)

Wastes codes	Required treatment[a]	Planned treatment	Treatment facility	Facility capacity (m^3/day)	Disposal facility	Treat-ment date
7. PUREX Process Condensate						
Included with LLW DST wastes.						
8. Hexone Waste						
F003	incineration	incineration	offsite	TBD	TBD	1991 or 1992
WT02	none					
9. 183-H Solar Basin Waste						
U123	incineration[g]	TBD	WRAP	TBD	TBD	1999[e]
P030	CCWE	TBD	WRAP	TBD	TBD	1999[e]
P120	stabilization	TBD	WRAP	TBD	TBD	1999[e]
P029	CCWE	TBD	WRAP	TBD	TBD	1999[e]
P106	CCWE	TBD	WRAP	TBD	TBD	1999[e]
P098	CCWE	TBD	WRAP	TBD	TBD	1999[e]
D007	CCWE	TBD	WRAP	TBD	TBD	1999[e]
WT01	reduction	TBD	WRAP	TBD	TBD	1999[e]
WT02	none	TBD	TBD	TBD	TBD	TBD
10. PUREX Storage Tunnel #2 Waste (mercury)						
D009	amalgamation	TBD	TBD	TBD	TBD	TBD
WT01	reduction	TBD	TBD	TBD	TBD	TBD
11. PUREX Storage Tunnels #1 and #2 Waste (lead and silver)						
D001	deactivation	TBD	TBD	TBD	TBD	TBD
D011	CCWE	TBD	TBD	TBD	TBD	TBD

9 2 1 2 6 4 0 0 8 7 6

Table 2-6. Treatment of Land Disposal Restricted Waste for Disposal. (sheet 8 of 13)

Wastes codes	Required treatment[a]	Planned treatment	Treatment facility	Facility capacity (m^3/day)	Disposal facility	Treat-ment date
WT01	reduction	TBD	TBD	TBD	TBD	TBD
D008	macro-encapsulation	TBD	TBD	TBD	TBD	TBD
WT01	reduction	TBD	TBD	TBD	TBD	TBD
12. PUREX Canyon Waste Pile (lead)						
D008	macro-encapsulation	TBD	TBD	TBD	TBD	TBD
WT01	reduction	TBD	TBD	TBD	TBD	TBD
13. Hanford Central Waste Complex Stored, Low-Level, Transuranic, and PCB Waste Low-Level Waste[h]						
F001	CCWE	TBD	WRAP	TBD	TBD	1999[e]
F002	CCWE	TBD	WRAP	TBD	TBD	1999[e]
F003	CCWE	TBD	WRAP	TBD	TBD	1999[e]
F004	CCWE	TBD	WRAP	TBD	TBD	1999[e]
F005	CCWE	TBD	WRAP	TBD	TBD	1999[e]
D001	deactivation	TBD	WRAP	TBD	TBD	1999[e]
D002	deactivation	TBD	WRAP	TBD	TBD	1999[e]
D003	deactivation	TBD	WRAP	TBD	TBD	1999[e]
D004	CCWE	TBD	WRAP	TBD	TBD	1999[e]
D005	CCWE	TBD	WRAP	TBD	TBD	1999[e]
D006	CCWE	TBD	WRAP	TBD	TBD	1999[e]
D007	CCWE	TBD	WRAP	TBD	TBD	1999[e]

9 2 1 2 6 4 0 0 8 7 7

Table 2-6. Treatment of Land Disposal Restricted Waste for Disposal. (sheet 9 of 13)

Wastes codes	Required treatment[a]	Planned treatment	Treatment facility	Facility capacity (m^3/day)	Disposal facility	Treat-ment date
D008	macro-encapsulation	TBD	WRAP	TBD	TBD	1999[e]
D009	amalgamation	TBD	WRAP	TBD	TBD	1999[e]
D010	CCWE	TBD	WRAP	TBD	TBD	1999[e]
D011	CCWE	TBD	WRAP	TBD	TBD	1999[e]
D012	CCWE	TBD	WRAP	TBD	TBD	1999[e]
D016	CCWE	TBD	WRAP	TBD	TBD	1999[e]
WT01	reduction	TBD	WRAP	TBD	TBD	1999[e]
WT02	none	TBD	WRAP	TBD	TBD	1999[e]
WC01	reduction	TBD	WRAP	TBD	TBD	1999[e]
WC02	none	TBD	WRAP	TBD	TBD	1999[e]
WP01	reduction	TBD	WRAP	TBD	TBD	1999[e]
WP02	none	TBD	WRAP	TBD	TBD	1999[e]
WP03	none	TBD	WRAP	TBD	TBD	1999[e]
U080	CCWE	TBD	WRAP	TBD	TBD	1999[e]
U123	incineration	TBD	WRAP	TBD	TBD	1999[e]
U161	CCWE	TBD	WRAP	TBD	TBD	1999[e]
P030	CCWE	TBD	WRAP	TBD	TBD	1999[e]
P120	stabilization	TBD	WRAP	TBD	TBD	1999[e]
P029	CCWE	TBD	WRAP	TBD	TBD	1999[e]
P106	CCWE	TBD	WRAP	TBD	TBD	1999[e]
P098	CCWE	TBD	WRAP	TBD	TBD	1999[e]
PCBs	incineration	TBD	WRAP	TBD	TBD	1999[e]

9 2 1 2 6 4 0 0 9 7 8

Table 2-6. Treatment of Land Disposal Restricted Waste for Disposal. (sheet 10 of 13)

Wastes codes	Required treatment[a]	Planned treatment	Treatment facility	Facility capacity (m^3/day)	Disposal facility	Treat-ment date
Transuranic Waste[i]						
F003	CCWE	TBD	WRAP	TBD	TBD	1999[e]
F005	CCWE	TBD	WRAP	TBD	TBD	1999[e]
D001	deactivation	TBD	WRAP	TBD	TBD	1999[e]
D002	deactivation	TBD	WRAP	TBD	TBD	1999[e]
D006	CCWE	TBD	WRAP	TBD	TBD	1999[e]
D007	CCWE	TBD	WRAP	TBD	TBD	1999[e]
D008	macro-encapsulation	TBD	WRAP	TBD	TBD	1999[e]
D009	amalgamation	TBD	WRAP	TBD	TBD	1999[e]
WT01	reduction	TBD	WRAP	TBD	TBD	1999[e]
WT02	none	TBD	WRAP	TBD	TBD	1999[e]
WC01	reduction	TBD	WRAP	TBD	TBD	1999[e]
WC02	none	TBD	WRAP	TBD	TBD	1999[e]
PCBs	incineration	TBD	Incinerator	TBD	TBD	1999[e]
14. Retrievably Stored Low-Level and Transuranic Wastes Low-Level Waste[j]						
F001	CCWE	TBD	WRAP	TBD	TBD	1999[e]
F003	CCWE	TBD	WRAP	TBD	TBD	1999[e]
F005	CCWE	TBD	WRAP	TBD	TBD	1999[e]
D001	deactivation	TBD	WRAP	TBD	TBD	1999[e]

9 2 1 2 6 4 0 0 8 7 9

Table 2-6. Treatment of Land Disposal Restricted Waste for Disposal. (sheet 11 of 13)

Wastes codes	Required treatment[a]	Planned treatment	Treatment facility	Facility capacity (m^3/day)	Disposal facility	Treat-ment date
D003	deactivation	TBD	WRAP	TBD	TBD	1999[e]
D005	CCWE	TBD	WRAP	TBD	TBD	1999[e]
D006	CCWE	TBD	WRAP	TBD	TBD	1999[e]
D007	CCWE	TBD	WRAP	TBD	TBD	1999[e]
D008	macro-encapsulation	TBD	WRAP	TBD	TBD	1999[e]
D009	amalgamation	TBD	WRAP	TBD	TBD	1999[e]
D011	CCWE	TBD	WRAP	TBD	TBD	1999[e]
WT01	reduction	TBD	WRAP	TBD	TBD	1999[e]
WT02	none	TBD	WRAP	TBD	TBD	1999[e]
WC01	reduction	TBD	WRAP	TBD	TBD	1999[e]
WC02	none	TBD	WRAP	TBD	TBD	1999[e]
WP01	reduction	TBD	WRAP	TBD	TBD	1999[e]
WP03	none	TBD	WRAP	TBD	TBD	1999[e]
PCBs	incineration	TBD	WRAP	TBD	TBD	1999[e]
Transuranic Waste[k]						
D006	CCWE	TBD	WRAP	TBD	TBD	1999[e]
D008	macro-encapsulation	TBD	WRAP	TBD	TBD	1999[e]
WT01	reduction	TBD	WRAP	TBD	TBD	1999[e]
WT01	reduction	TBD	WRAP	TBD	TBD	1999[e]
WC01	reduction	TBD	WRAP	TBD	TBD	1999[e]
P015		TBD	WRAP	TBD	TBD	1999[e]

9 2 1 2 6 4 0 0 8 8 0

Table 2-6. Treatment of Land Disposal Restricted Waste for Disposal. (sheet 12 of 13)

Wastes codes	Required treatment[a]	Planned treatment	Treatment facility	Facility capacity (m^3/day)	Disposal facility	Treat-ment date
15. TRUSAF Stored Waste						
D002	none[f]	none	---	---	WIPP	TBD
D005	none[f]	none	---	---	WIPP	TBD
D006	none[f]	none	---	---	WIPP	TBD
D007	none[f]	none	---	---	WIPP	TBD
D008	none[f]	none	---	---	WIPP	TBD
D009	none[f]	none	---	---	WIPP	TBD
WC01	none[f]	none	---	---	WIPP	TBD
WC02	none[f]	none	---	---	WIPP	TBD
WP01	none[f]	none	---	---	WIPP	TBD
WT01	none[f]	none	---	---	WIPP	TBD
16. 303-K Stored Waste						
F001	CCWE	TBD	WRAP	TBD	TBD	1999[e,m]
F003	CCWE	TBD	WRAP	TBD	TBD	1999[e,m]
D001	deactivation	TBD	WRAP	TBD	TBD	1999[e]
D002	deactivation	TBD	WRAP	TBD	TBD	1999[e]
D006	CCWE	TBD	WRAP	TBD	TBD	1999[e]
WT01	reduction	TBD	WRAP	TBD	TBD	1999[e]
WT02	none	TBD	WRAP	TBD	TBD	1999[e]

9 2 1 2 6 4 0 3 8 1

Table 2-6. Treatment of Land Disposal Restricted Waste for Disposal. (sheet 13 of 13)

Wastes codes	Required treatment[a]	Planned treatment	Treatment facility	Facility capacity (m^3/day)	Disposal facility	Treat-ment date
WC01	reduction	TBD	WRAP	TBD	TBD	1999[e]
WP01	reduction	TBD	WRAP	TBD	TBD	1999[e]

[a]Treatment required by 55 FR 22520.
[b]Concentrate is recycled for grout disposal.
[c]This waste will be available to treatment after this date and will be treated as soon as possible based on facility operating schedules.
[d]Volume requiring treatment is approximately twice the stored volume due to heat loading limits in the grout disposal vaults.
[e]The facility for treating this waste is available on this date. This waste will be treated based on facility operating schedules. For the WRAP, dates given are for Module 2. However, some wastes may be able to be treated sooner (1996) in Module 1.
[f]No treatment is required as WIPP will operate under a no migration petition.
[g]A treatment variance will be applied for; incineration of this waste is not planned.
[h]Total volume of this waste type is 1,416 cubic meters.
[i]Total volume of this waste type is 111 cubic meters.
[j]Total volume of this waste type is 96.2 cubic meters.
[k]Total volume of this waste type is 234.4 cubic meters.
[l]Total volume of this waste type is 38.85 cubic meters.
[m]These degreaser solvent wastes are to be sent offsite for treatment.

CCWE = constituent concentration in the waste extract
DST = double-shell tank
ETF = Effluent Treatment Facility
GTF = Grout Treatment Facility
HWVP = Hanford Waste Vitrification Plant
LLBG = low-level burial grounds
LLW = low-level waste
PCB = polychlorinated biphenyl
PUREX = Plutonium-Uranium Extraction (Facility)
SALDS = state-approved land disposal structure
TBD = to be determined
TRUSAF = Transuranic Waste Storage and Assay Facility
WIPP = Waste Isolation Pilot Plant
WRAP = Waste Receiving and Packaging (Facility).

9 2 1 2 6 4 0 0 8 3 2

Table 2-7. Waste Reduction Activities for Hanford Site Land Disposal Mixed Wastes. (sheet 1 of 2)

Waste	Method to reduce	Schedule for implementing waste reduction procedures	Projected waste reduction
1. Double-Shell Tank Waste[a]	• Evaporation • Minimize frequency of flush • Minimize flush volumes	underway	80%
2. PUREX Aging Waste	• Optimum control of the evaporator waste flow concentration overflow rate • Reduction of Al/F ratio in aluminum nitrate nonahydrate addition to the dissolvers • Evaporation	underway	TBD TBD 21%
3. Single-Shell Tank Waste	• Waste is no longer being added to SSTs		N/A
4. 242-A Evaporator Process Condensate	• Effluent Treatment Facility will remove ammonia, aqueous, salts, metal ions, and organics	1992	>99%
5. 4843 Sodium Storage Facility Waste[b]	• Deactivate sodium by converting it to carbonate (or other treatment method)	TBD	>99%
6. PUREX Ammonia Scrubber Waste	• Evaporation • Planned ammonia destruction process	1995	90%
7. PUREX Process Condensate	• Evaporation • Neutralization	1993	100%
8. Hexone Waste	• Distill and incinerate	Distillation complete (1990), incineration in 1992	88%
9. 183-H Solar Basin Waste	• Evaporate liquid	Complete (1990)	unknown

9 2 1 2 6 4 0 8 8 3

Table 2-7. Waste Reduction Activities for Hanford Site Land Disposal Mixed Wastes. (sheet 2 of 2)

Waste	Method to reduce	Schedule for implementing waste reduction procedures	Projected waste reduction
10. PUREX Storage Tunnel #2 Waste (mercury)	• Segregation from nonhazardous waste	ongoing	variable
11. PUREX Storage Tunnels #1 and #2 Waste (silver and lead)	• Segregation from nonhazardous waste	ongoing	variable
12. PUREX Canyon Waste Pile (lead)	• Reduce use of lead counterweights	ongoing	variable
13. Hanford Central Waste Complex, Stored Low-Level, Transuranic, and PCB Waste	• Compaction • Substitution of nonhazardous materials • Neutralization of corrosive materials • Treatment of waste to remove hazardous constituents	TBD	variable
14. Retrievably Stored Low-Level and Transuranic Wastes	• Waste no longer is being added		N/A
15. TRUSAF Stored Waste	• Waste is not generated at TRUSAF		N/A
16. 303-K Stored Waste	• Routine waste is no longer being received		N/A

[a]Waste sent to tanks also is reduced at the generating facilities through pretreatment (e.g., destroying ammonia) and recycling of streams.
[b]Waste sodium also is recycled at the generation point (Fast Flux Test Facility).

N/A = not available
PCB = polychlorinated biphenyl
PUREX = Plutonium-Uranium Extraction (Facility)
SST = single-shell tank
TBD = to be determined
TRUSAF = Transuranic Waste Storage and Assay Facility.

9 2 1 2 6 4 0 0 8 8 4

This page intentionally left blank.

9 2 1 2 6 4 0 0 8 8 5

3.0 INDIVIDUAL WASTE STREAM INFORMATION

3.1 DOUBLE-SHELL TANK WASTE

Most DST waste was generated during the past production of nuclear materials. The DST waste is stored as alkaline liquids and solids in double-shell underground storage tanks in the 200 East and 200 West Areas of the Hanford Site. There are 28 DSTs that currently store about 81,184 cubic meters of waste (WHC 1990b). Two of these DSTs contain PUREX aging waste and are addressed separately in Section 3.2.

The DST waste is generated from the PUREX process, research and development programs, laboratories, and decontamination of plants and equipment. Liquid supernatant and interstitial liquids from SSTs also are pumped to DSTs for storage.

Treatment plans are to recover the contents of the tanks and immobilize them for disposal. The transuranic and high-level fractions will be vitrified for disposal in a geologic repository; the low activity fraction will be converted to grout for disposal in near-surface vaults at the GTF.

Projected generation rates for DST waste fluctuate depending on the operating schedules of the waste generating units. The startup of planned treatment and disposal units will decrease the current and future DST waste volumes.

9 2 1 2 6 4 0 0 8 8 6

3.1.1 Generation

The DST waste has been generated by operations in the 100, 200, 300, and 400 Areas of the Hanford Site. The first DSTs were constructed in 1970 and the newest DSTs were completed in 1986.

3.1.1.1 Process. The tanks contain waste from current operations and waste from past chemical separations processes. The major contributors to the waste stored in DSTs are discussed in the following sections. All waste streams transferred to the DSTs for storage are treated with sodium hydroxide and sodium nitrite to minimize tank corrosion. In addition to newly generated waste, liquid waste stored in SSTs also is transferred to the DSTs. This waste originated from the same sources as that stored in the DSTs. These sources include the PUREX Plant and B Plant chemical processes as well as bismuth phosphate separations, uranium recovery, and reduction-oxidation extraction processes. Descriptions of these processes are included below (DOE 1987).

3.1.1.1.1 The PUREX Process. The PUREX process is a solvent extraction process that uses a tributyl phosphate in a kerosene-like solvent for recovering uranium and plutonium from nitric acid solutions of irradiated uranium. Laboratory waste and flush water also are sent to the DSTs from the PUREX Plant. The PUREX Plant began operation in 1956 and has operated intermittently since then.

3.1.1.1.2 Plutonium Finishing Plant. In 1949 the PFP began converting plutonium in solution to plutonium metal. This historic waste stream was high in metallic nitrates. The process was comprised of precipitation, solvent exchange, and ion exchange. The current waste stream generated from the PFP is high in metallic hydroxides generated from plutonium reclamation, plutonium metal conversion, and laboratory operations.

3.1.1.1.3 Bismuth Phosphate Separations. Beginning in the early 1940s, B Plant and T Plant separated plutonium from uranium in irradiated fuel by coprecipitation with bismuth phosphate from a uranyl nitrate solution. The plutonium was further separated from fission products by successive precipitation cycles using bismuth phosphate and lanthanum fluoride. Waste containing uranium, acid, and many of the fission products was neutralized and stored in underground SSTs. This separation process was used from 1943 to 1957.

3.1.1.1.4 Uranium Recovery Process. Uranium in process waste was mined from the SSTs by sluicing, dissolved in nitric acid, and processed through a solvent extraction process using tributyl phosphate in a kerosene-like solvent. The acid waste from the uranium recovery process was made alkaline and returned to SSTs. The recovery process, which operated from 1952 to 1958, resulted in an increase in the volume of nonradioactive salts and a small increase in waste volume.

3.1.1.1.5 Reduction-Oxidation Process. The reduction-oxidation process used a continuous solvent extraction process to extract plutonium and uranium from dissolved fuel in a hexone solvent. The slightly acidic waste stream contained the fission products and large quantities of aluminum nitrate. This waste was neutralized and stored in SSTs. The 202-S Plant operated between 1951 and 1967.

3.1.1.1.6 Other Contributors to Double-Shell Tank Waste. Cleaning solutions and other miscellaneous waste are chemically adjusted to minimize tank corrosivity and transferred to DSTs for storage. The waste includes the following:

- Spent cleaning solutions from decontamination and ion exchange regeneration at the 100 Area
- Waste from decontaminating and decommissioning tools and equipment
- Laboratory waste from the 200 Area
- Fuels fabrication waste from the 300 Area
- Miscellaneous waste from the Fast Flux Test Facility (FFTF) operations in the 400 Area.

3.1.1.2 Generation. The DSTs do not simply accumulate and store waste; the tanks are a waste-handling system. The inflows to the system include PUREX and other production waste, interstitial liquids pumped from SSTs, and B Plant waste. Outflows include evaporation, grout, and future vitrification processes. Evaporation decreases the DST waste volume; grout and vitrification remove DST waste and solidify it for disposal.

9 2 1 2 6 4 0 0 8 3 7

Projected DST waste generation for 1991 through 1999 is shown in Figure 3-1 in terms of tank space used versus available space. The average generation rate for DST waste is about 12,900 cubic meters per year before evaporation. This generation rate is based on waste generation trends through December 1990. The projection also incorporates many assumptions, including the operation of the 242-A Evaporator and B Plant. These assumptions are detailed in Chapter 1.0, Section 1.2.

3.1.2 Characterization

The waste in DSTs is solid, liquid, and sludge; low-level and transuranic; and designated as ignitable, corrosive, toxic, persistent, and carcinogenic extremely hazardous waste. Because of heavy metals contamination, DST waste also is designated as toxic by the TCLP.

This section summarizes process knowledge and sample analysis for the contents of the DSTs. The assumed waste designations and their bases are described, and schedules for further analysis are given.

3.1.2.1 Process Knowledge. Several processes contribute to DST waste, as described in Section 3.1.1.1. Waste management practices, including evaporation of tank contents, have intermingled the various types of waste. This intermingling precludes a detailed, quantified characterization of the tank contents based strictly on process knowledge. Instead, the DST waste is described qualitatively based on generation data and sample analysis.

Stratification and segregation have occurred in the tanks as solids have settled out. The consistency of the waste ranges from liquid supernatant to a thick sludge. The sludge is formed by solids that precipitate when sodium hydroxide is added to raise the pH above 12.5 to minimize tank corrosion.

The major constituents of DST waste are water and sodium salts of aluminate, nitrate, nitrite, phosphate, hydroxide, carbonate, and sulfate. Some calcium and potassium salts also are present. Complexed waste in the DSTs contains the chelating agents ethylenediamine-tetraacetic acid and n-hydroxyethylethylenediamine-tetraacetic acid. There also may be detectable concentrations of halogenated and nonhalogenated organic compounds and heavy metals such as lead, chromium, and cadmium.

3.1.2.2 Sample Analyses. Samples of the DSTs have been analyzed. Because no one DST constitutes a "representative" tank, the analytical data from these samples are presented in Table 3-1 as ranges of values for tank composition.

3.1.2.3 Waste Designation and Basis. All waste stored in DSTs is designated corrosive dangerous waste (D002) because it has been treated with sodium hydroxide to raise the pH above 12.5 in preparation for tank storage.

The DST waste is assumed to be extremely hazardous waste (WT01) for toxicity based on the concentration of chemicals in the waste. The waste may exhibit the characteristic of ignitability (D001) as identified in WAC 173-303-090 because of the presence of oxidizers such as nitrate and nitrite. The waste has not been tested for ignitability. This designation currently is being reevaluated. The DST waste also is suspected to contain

the spent solvents hexone and acetone (waste code F003). The DSTs contain waste that meets TCLP criteria for heavy metals contamination: arsenic (D004), barium (D005), cadmium (D006), chromium (D007), lead (D008), mercury (D009), selenium (D010), and silver (D011). The waste also is carcinogenic (WC01, WC02) and persistent (WP01, WP02).

The DSTs do not contain waste listed on the dangerous waste source list of WAC 173-303-082.

3.1.2.4 Uncertainty of Waste Designation. The waste codes previously assigned are considered accurate, but additional waste codes may be added or deleted based on the ongoing characterization program.

3.1.2.5 Schedule for Further Characterization. Sampling and analysis of the DST contents is underway and scheduled to continue through 1993 (WHC 1989a).

The analysis protocol will follow the EPA *Test Methods for the Evaluation of Solid Waste* (SW-846) (EPA 1986), with Ecology-approved deviations, and include sample analyses of physical characteristics, 33 inorganic compounds, volatile organics, and radioisotopes. The streams also will be characterized before and after treatment (Chapter 3.0, Section 3.1.4).

3.1.3 Storage

This section describes DST storage and assesses its compliance with existing regulations.

3.1.3.1 Storage Unit and Capacity. There are 28 DSTs, each with a 4,300-cubic meter capacity. Four of these DSTs are equipped to manage PUREX aging waste and are addressed separately in Section 3.2. The 28 tanks are located in 6 tank farms in the 200 East and 200 West Areas of the Hanford Site.

3.1.3.2 Amount in Storage. As of December 31, 1990, the tanks held 73,939 cubic meters of waste (WHC 1990b). This does not include PUREX aging waste (Chapter 3.0, Section 3.2). Projections indicate that the DSTs could be filled to capacity before 1993 based on current expected generation rates. This occurs because the filling of grout vaults has been delayed and because of the generation of waste from pretreatment, which is assumed for October 1993. However, the startup date for pretreatment is under evaluation (see Chapter 2.0, Section 2.3). A delay in pretreatment, as an outcome of the evaluation, would provide relief to the DST space limitations. The construction of up to four new DSTs is proposed to relieve the limitations.

3.1.3.3 Storage Compliance Assessment. The DSTs were reviewed for compliance with interim status dangerous waste regulations in accordance with Tri-Party Agreement (Ecology et al. 1990) Milestone M-21-00. The assessment for compliance with interim status regulations noted the following areas of noncompliance (DOE-RL 1991):

- Inspection plan
- Waste analysis plan

9 2 1 2 6 4 0 0 8 8 9

- Waste characterization
- Training plan.

Compliance action schedules for DSTs are being negotiated in the Tri-Party Agreement. Interim status compliance for the items listed is completed. Additional DST actions may be required after December 1990. These actions may include the following:

- Recordkeeping system modifications
- Provision of secondary containment for ancillary equipment
- Development of additional leak detection systems
- Development of a closure plan.

3.1.4 Treatment

This section discusses current and proposed treatment of DST waste.

3.1.4.1 Current Treatment. The 242-A Evaporator reduces the DST waste volume by evaporative concentration (Chapter 3.0, Section 3.4.1.1). It began operating in 1977 and has evaporated more than 246,000 cubic meters of water from the stored waste.

3.1.4.2 Proposed Treatment. The DST waste will be retrieved, pretreated (as required), and solidified for disposal. A pictorial flow diagram and a process flow diagram are shown in Figures 3-2 and 3-3 (WHC 1989a). The transuranic fraction of the tank waste will be vitrified and disposed of in a geologic repository. High-level DST waste (aging waste) is addressed separately in Section 3.2. The low-level fraction will be converted to cementitious grout for disposal in near-surface vaults. Grout disposal is being conducted under an interim RCRA permit (DOE-RL 1990c) and in compliance with applicable DOE orders.

Four waste types have been identified as feed to the vitrification plant after pretreatment (WHC 1990c):

- NCAW (PUREX aging waste)
- Complexant concentrate
- PFP waste
- NCRW.

Pretreatment consists of separating the waste into a low-volume, transuranic waste fraction (for vitrification), and a low activity waste fraction (for grout). Certain other DST waste types (double-shell slurry and double-shell slurry feed) are directly disposed of as grout without pretreatment.

3.1.4.2.1 Definition and Treatment of Double-Shell Slurry Feed and Double-Shell Slurry Waste. Double-shell slurry feed is generated by concentrating the dilute waste streams generated by the operating plants to conserve storage space. Double-shell slurry is generated by further concentration of double-shell slurry feed.

Double-shell slurry feed and double-shell slurry are retrieved from the DSTs and treated for disposal at the GTF (DOE-RL 1990c). The treatment of these waste types at the GTF is scheduled to begin in 1993 (Milestone M-01-00, Ecology et al. 1990).

3.1.4.2.2 Definition and Treatment of Neutralized Current Acid Waste. The NCAW is PUREX aging waste. Further discussion of NCAW is contained in Section 3.2.

3.1.4.2.3 Definition and Treatment of Neutralized Cladding Removal Solids Waste. Cladding removal waste results from dissolving the zircaloy cladding of irradiated nuclear fuel from N Reactor. Neutralizing the waste precipitates most of the zirconium and creates a slurry. The resulting stream is called NCRW.

Treatment of NCRW begins by separating solids from any remaining liquid. The resulting liquid is a low-level waste that goes to grout treatment. Most of the solids are dissolved with nitric acid, and the dissolved transuranic elements are separated from the undissolved solids and used as feed for a transuranic-extraction process.

The transuranic-extraction process separates the transuranic radionuclides and the nontransuranic constituents of the waste, resulting in a small volume of concentrated transuranic waste stream and a low-level waste stream. The concentrated transuranic stream is recombined with the undissolved solids and sent to the vitrification plant. The low-level waste stream is returned to the DSTs for evaporation and ultimately is disposed of by grouting.

Pilot-plant tests of the pretreatment process for NCRW are scheduled for 1993. Pretreatment of the NCRW is scheduled to begin in 1998, with vitrification of the treated waste scheduled for 2002 (WHC 1989a).

3.1.4.2.4 Definition and Treatment of Plutonium Finishing Plant Waste. The PFP waste originates from the conversion of plutonium nitrate to oxide or metal and includes transuranic laboratory waste, high-salt solvent extraction waste, and organic wash waste. As of December 1990, 390 cubic meters of this waste is in storage (WHC 1990b). Projected generation of this waste through 1995 is 1,150 cubic meters. Treatment of PFP waste is the same as treatment of NCRW described in Chapter 3.0, Section 3.1.4.2.2. Pilot-plant testing of the PFP waste treatment is scheduled for 1994 and full-scale treatment of the waste is scheduled to begin in the year 2000, with vitrification of the treated waste scheduled for 2004 (WHC 1989a).

3.1.4.2.5 Definition and Treatment of Complexant Concentrate Waste. The complexant concentrate results from the concentration of waste containing large amounts of organic complexing agents. The organic complexing compounds

were introduced to the waste during strontium recovery at B Plant. As of May 1990, 15,450 cubic meters of this waste was in storage. No future generation of this waste is planned.

Treatment of the complexant concentrate begins with acidifying the stream to dissolve as many of the solids as possible. The liquid is separated from the undissolved solids and used as feed to the transuranic-extraction process. The transuranic-extraction process separates a low-volume transuranic concentrate waste stream from a low-level waste stream containing organics and possibly cesium. The low-level waste stream is treated to destroy organics and, if necessary, the cesium is removed. The resulting low-level waste stream then goes to grout treatment. The transuranic concentrate stream is added to the undissolved solids and eventually vitrified.

Pilot-plant testing of the complexant concentrate waste treatment is scheduled for 1995. Full-scale processing of complexant concentrate waste is scheduled for 2001. Vitrification of the pretreated waste is scheduled for 2004 (WHC 1989a).

3.1.5 Waste Reduction

Currently 12 major plants generate DST waste. During the past 5 years these plants have consistently reduced their total yearly volume of waste sent to the DSTs. This significant reduction of waste results partly from shutting down some operations and partly from waste minimization and treatment. Waste reduction activities (current and planned) are outlined for each unit in the *Annual Report of Tank Waste Treatability* (WHC 1990c). The four activities include minimizing flush volumes and frequency, pretreating waste (e.g., destroying ammonia), modifying processes, and recycling streams.

Dilute waste received at the DSTs will be concentrated by the 242-A Evaporator, further reducing the waste volume by 30% to 95%. In an average year, projected volumes of dilute waste will be reduced by approximately 71% (Chapter 3.0, Section 3.1.1.2).

3.1.6 Variances, Exemptions, Time Extensions

The DST waste consists of high-level waste, transuranic waste, and low-level waste containing dangerous waste constituents. The DST waste is restricted from land disposal because it contains solvent waste (40 CFR 268.30) and California list waste (40 CFR 268.32). It also contains waste covered by the Third-Third Promulgation (55 FR 22520).

The Third-Third Promulgation (55 FR 22520) provided for a 2-year national capacity variance from the land disposal restrictions for Third-Third mixed waste. This variance allows continued storage of these wastes. In the event that sufficient treatment capacity for this waste is not available at the expiration of this variance (August 1992), the Tri-Party Agreement (Ecology et al. 1990) will allow continued storage of this waste until sufficient treatment capacity is available in accordance with the schedules in the agreement.

The Tri-Party Agreement provides for continued storage of California list (40 CFR 268.32) and solvent waste (40 CFR 268.30) until treatment capacity is developed for these wastes. The agreement requires treatment and disposal capacity for these wastes to be developed on the following schedule:

- **Low-Level Waste**--Disposal of treated waste in grout as soon as sufficient quantities are available to facilitate proper treatment and disposal, in accordance with the grout schedule defined in the Tri-Party Agreement that requires 14 grout campaigns by December 1996

- **Transuranic Waste**--Treatment schedules for transuranic waste stored in the DSTs (complexed concentrate, NCRW, solids, and PFP solids) currently are being negotiated and will be incorporated into the Tri-Party Agreement when they are approved by all three parties to the agreement.

If additional variances, exemptions, or time extensions are required as a result of delays in the development of treatment, storage, or disposal capacity, they will be applied for in accordance with the procedures detailed in the Tri-Party Agreement.

9 2 1 2 6 4 0 0 6 9 3

3.2 PUREX AGING WASTE

The aging waste storage unit comprises four double-shell storage tanks in the 241-AY (Tanks AY-101 and AY-102) and 241-AZ (Tanks AZ-101 and AZ-102) tank farms in the 200 East Area of the Hanford Site. Two DSTs, 241-AZ-101 and 241-AZ-102, presently hold a mixture of solids and supernate aging high-level waste (from the PUREX Plant).

Aging waste from the PUREX Plant comes from the first decontamination solvent extraction column in the PUREX solvent extraction process. The feed to the extraction column is irradiated fuel elements dissolved in nitric acid. The extraction column separates the uranium and transuranic products from the majority of the fission products. The fission products are contained in the aqueous nitric acid phase from the extraction column. The aqueous phase is concentrated to recover nitric acid and reduce volumes, and the concentrated stream is sampled. If based on sample analysis it is determined to be a waste, it is treated with sugar to destroy the majority of the nitric acid. Sodium hydroxide is added to meet storage tank specifications and the waste is transferred to the aging DSTs for storage. As of December 31, 1990, a total of 7,245 cubic meters of PUREX aging waste was in storage.

The waste stream is considered corrosive and toxic and has designated EPA waste codes of D002, D006, D007, and D008. The waste stream will be treated at B Plant for separation of the high-level waste from the low-level waste. The low-level fraction will be transferred to the GTF for disposal and the high-level fraction will be vitrified at the HWVP and disposed of in a repository.

3.2.1 Generation

This section describes the waste generation process. If, as a result of the EIS for the disposition of stored reactor fuel the PUREX Plant is the preferred option, estimates of the future generation rate will be provided after the PUREX Plant restart plans have been developed.

The PUREX Plant receives irradiated zirconium clad fuel from N Reactor, removes the cladding from the fuel and dissolves the fuel in nitric acid. The dissolved fuel is processed through several solvent extraction steps to separate the plutonium, uranium, and neptunium from the fission products contained in the fuel. The aging waste contains the majority of the fission products from the fuel and is generated from the aqueous stream from the first extraction column.

3.2.2 Characterization

This section discusses the available waste characterization information. Information based on process knowledge and sample analysis is provided along with the waste designations and their bases, the uncertainty related to the designation, and the schedule for further analysis.

3.2.2.1 Process Knowledge. The aging waste is comprised of water, aluminum hydroxide, sodium nitrate, sodium hydroxide, sodium fluoride, cadmium nitrate, sodium nitrite, corrosion products, and the majority of radionuclides from N Reactor fuel. Past practice (before 1989) was to recycle process samples analyzed in the laboratory back to the process system, which may have resulted in some of the chemicals added to the samples entering the aging waste. The presence of these chemicals in the aging waste never has been confirmed by sample analysis.

3.2.2.2 Sample Analyses. The composition of PUREX Plant NCAW is given in Table 3-2. The results of sample analyses of the PUREX aging waste stored in the DSTs are given in Table 3-3.

3.2.2.3 Waste Designation and Basis. The NCAW stream contains excess amounts of sodium hydroxide (0.8 M) making the waste corrosive dangerous waste (D002) and land disposal restricted (52 FR 22520). Based on equivalent concentration calculations, there are sufficient concentrations of sodium nitrate and sodium hydroxide to make the aging waste toxic dangerous waste (WT01). In addition, there are sufficient quantities of heavy metals to designate the NCAW as a toxic, as determined by the TCLP, for cadmium (D006), chromium (D007), and possibly lead (D008).

3.2.2.4 Uncertainty of Waste Designation. Based on sample data from tanks 241-AZ-101 and 241-AZ-102 (Table 3-3), the waste designation is correct.

3.2.2.5 Schedule for Further Characterization. Twelve core samples of the waste will be characterized between October 1989 and September 30, 1992 (WHC 1989a).

3.2.3 Storage

This section provides the volume currently in storage and assesses the compliance status of the storage unit.

3.2.3.1 Storage Unit and Capacity. The aging waste storage unit comprises four double-shell storage tanks in the 241-AY and 241-AZ tank farms. Only the 241-AZ tank farm currently contains aging waste. The AY and AZ aging waste tanks each have a maximum fill volume of 3,800 cubic meters. The use of air-lift circulators limits the working volumes to 3,700 cubic meters for these tanks. These circulators keep the supernate agitated and aid in heat removal from the tanks. The tanks also are equipped with steam coils to boil away water in the waste and a ventilation system that can handle large amounts of steam.

3.2.3.2 Amount in Storage. Tanks 241-AZ-101 and 241-AZ-102 contain approximately equal volumes totaling 7,245 cubic meters. The waste in these tanks is NCAW. If the PUREX Plant restarts, future waste projections will be determined after the PUREX Plant restart plans have been developed.

3.2.3.3 Storage Compliance Assessment. The PUREX aging waste is stored in the DSTs. The DSTs were reviewed for compliance with interim status dangerous waste regulations in accordance with Tri-Party Agreement (Ecology et al. 1990) Milestone M-21-00. The results of the compliance assessment are provided in Chapter 3.0, Section 3.1.3.3.

3.2.4 Treatment

This section discusses the current and proposed waste treatment processes.

3.2.4.1 Current Treatment. Currently the aging waste is being stored pending pretreatment and vitrification.

3.2.4.2 Proposed Treatment. The NCAW will be pretreated in preparation for disposal. The GTF converts the liquid low activity waste from the pretreatment process into cement-like grout. The HWVP will incorporate high-level and transuranic waste into a glass matrix for disposal.

The major unit operations in the NCAW pretreatment process are solid/liquid separation and washing, polishing filtration, cesium removal by ion exchange, and concentration of the cesium and low-level waste streams (WHC 1989a). This process is illustrated in Figure 3-4 (WHC 1990c).

B Plant is scheduled to initiate pretreatment of NCAW at a date to be determined (Tri-Party Agreement Milestone M-02-01) (Ecology et al. 1990). A study to reevaluate use of this facility is in progress. Treatment milestones will be established after this study is complete.

9 2 1 2 6 4 0 0 8 9 5

3.2.5 Waste Reduction

The production of high-level waste by the PUREX Plant has been reduced from 9,800 kilograms per day of operation in 1985 to 4,900 kilograms per day of operation in 1988. Minimization of aging waste was accomplished through increased process control of the aqueous stream concentration, better control of aluminum nitrate addition, and better control of sodium hydroxide addition to adjust waste stream pH to tank specifications. The minimization is graphically illustrated in Figure 3-5.

The following process improvements have been implemented and will continue to be used to minimize the PUREX aging waste volumes:

- Optimum control of the evaporator waste concentration overflow rate
- Reduction of the aluminum-to-fluoride ratio in the aluminum nitrate nonahydrate addition to the dissolvers during fuel processing.

3.2.6 Variances, Exemptions, Time Extensions

The PUREX aging waste consists of high-level waste mixed with dangerous waste constituents. The PUREX aging waste is a land disposal restricted waste because of both the Third-Third Promulgation (55 FR 22520) and the presence of California list constituents. The Tri-Party Agreement (Ecology et al. 1990) provides for continued storage of California list waste (40 CFR 268.32) until treatment capacity is developed for this waste. The agreement requires treatment and disposal capacity for this waste to be developed on the following schedule:

- Demonstrate pretreatment at a date to be determined
- Initiate vitrification operations by December 1999
- Dispose of vitrified waste when repository opens.

The Third-Third Promulgation (55 FR 22520) provided for a 2-year national capacity variance from the land disposal restrictions for Third-Third mixed waste. This variance allows continued storage of these wastes. In the event that sufficient treatment capacity for this waste is not available at the expiration of this variance (August 1992), the Tri-Party Agreement will allow continued storage of this waste until sufficient treatment capacity is available in accordance with the schedules in the agreement.

If additional variances, exemptions, or time extensions are required as a result of delays in the development of treatment, storage, or disposal capacity, they will be applied for in accordance with the procedures detailed in the Tri-Party Agreement.

3.3 SINGLE-SHELL TANK WASTE

The SST waste currently in storage is not a land disposal restricted waste because it was placed in storage before the effective date of the land

9 2 1 2 6 4 0 0 8 9 6

disposal restrictions for mixed waste (November 27, 1987). Information on the SSTs is included only because if the waste is retrieved or transferred, it then becomes a land disposal restricted waste and this information will be required to identify treatment and disposal capacity requirements.

The SSTs are underground, reinforced-concrete, steel-lined tanks used for waste storage. These tanks have held chemically hazardous and radioactive waste generated as a byproduct of processing spent nuclear fuel for the recovery of plutonium, uranium, and neptunium beginning in 1944; additional tanks were constructed as required.

Liquid waste collection and storage in the SSTs continued until November 1980. The only material added to the SSTs since 1980 has been water, which was added to two tanks for evaporative cooling purposes. An interim stabilization program was initiated in 1968 to remove pumpable interstitial liquid and supernatant from the SSTs and transfer it to the DSTs. This program primarily is intended to reduce the leak potential of the SSTs and will be completed in 1996 (WHC 1990d).

The SSTs consist of 149 tanks containing approximately 139,500 cubic meters of waste. These tanks are located in 12 tank farms with 4 to 18 tanks each in the 200 East and 200 West Areas. The amount of waste contained in the tanks varies from 5% to 95% of each tank's capacity and varies in consistency from pumpable liquid to sludge to hard salt cake.

9 2 1 2 5 4 0 0 8 9 7

3.3.1 Generation

This section describes the waste generation process.

3.3.1.1 Process. The waste has been generated through a variety of analytical, decladding, and separation processes and various associated Sitewide operations. The SSTs received this waste from various Hanford Site activities before 1980.

Waste currently stored in the SSTs was produced by four major chemical processing operations that were conducted from 1944 to 1980:

- The bismuth phosphate process
- The reduction-oxidation process
- The PUREX process
- The tributyl phosphate process.

The bismuth phosphate, reduction-oxidation, and PUREX Plant processes were specifically designed for plutonium recovery. The initial bismuth phosphate chemical separations process produced large volumes of dilute, low-heat waste. The tributyl phosphate solvent extraction process was designed for the recovery of relatively large amounts of uranium that remained in the bismuth phosphate process waste. The bismuth phosphate process was superseded by the reduction-oxidation process, which was superseded by the PUREX process.

The reduction-oxidation and PUREX processes recovered the uranium and neptunium as well as the plutonium from the irradiated reactor fuel. The PUREX process used solvent extraction with tributyl phosphate to separate uranium and plutonium. Chemical removal of the fuel cladding before extraction produced decladding waste with high concentrations of aluminum and zirconium. High-heat-producing isotopes in the waste were separated from the fuel-reprocessing waste by a modified B Plant waste fractionation process. The strontium was separated by an extraction process using complexing agents (e.g., ethylene-diaminetetraacetic acid, n-hydroxyethylethylenediamine-tetraacetic acid, citrate) to prevent transition metal extraction. The cesium was purified by ion exchange. These isotopes (cesium and strontium) were converted to fluoride and chloride salts and encapsulated in the Waste Encapsulation and Storage Facility. Sodium hydroxide or sodium carbonate was added to the waste before transfer to the SSTs to create an alkaline solution and to minimize tank corrosion (DOE-RL 1989a). The processing of irradiated fuels produced waste that included most of the fission products and comparatively small quantities of uranium, plutonium, and other actinides (WHC 1990d).

Smaller volumes of waste also were added to the SSTs from research and development programs, facility and equipment decontamination, laboratory activities, and the PFP (DOE-RL 1989a).

Waste components in the SSTs have settled, stratified, and segregated. The tanks contain a mixture of nonradioactive and radioactive chemicals produced during the various chemical processes. Therefore, the determination of the actual composition of each tank of waste is complex.

3.3.1.2 Generation. Addition of new waste into the SSTs was terminated in November 1980. Water occasionally is added to certain tanks if necessary for evaporative cooling purposes. This water evaporates and does not add to the waste volume.

3.3.2 Characterization

The SSTs contain radioactive mixed waste that is solid, liquid, and sludge.

This section discusses the available waste characterization information. Information based on process knowledge and sample analysis is provided along with the waste designations and their bases, the uncertainty related to the designation, and the schedule for further analysis.

3.3.2.1 Process Knowledge. The SSTs contain irradiated fuel reprocessing waste from separation plants. The tanks received waste from five chemical process activities: the bismuth phosphate, reduction-oxidation, PUREX, and tributyl phosphate processes, and B Plant waste fractionation.

The SSTs contain approximately 139,500 cubic meters of waste as radionuclides and dangerous nonradioactive chemicals. The distribution of the three waste forms (sludge, salt cake, and supernatant) in these tanks is illustrated in Figure 3-6 (WHC 1990b). The salt cake and sludge contain

interstitial liquid. The bulk of this liquid, approximately 19,000 cubic meters, is contained in salt cake and is being pumped to the DSTs.

The sludge consists of the solids (hydrous metal oxides, iron, and aluminum) precipitated from the neutralization of acid waste before transfer to the SSTs. Sludges vary greatly in their physical properties. Salt cake contains various salts, primarily sodium nitrate, formed by the evaporation of the water from the waste. Damp salt cake is a jelly-like material; dried salt cake is a hard, abrasive, brittle material that may have formed as large single crystals. The salt cake porosity ranges from 10 to 50%. The liquid exists as supernate and interstitial fluid (WHC 1990d).

Additional equipment components also are found in the tanks with the process waste. These include metal measuring tapes, level instrumentation, other contaminated scrap, pump heads and shafts, and diatamaceous earth. Other nonrecorded items are likely to be contained in the tanks.

3.3.2.2 Sample Analyses. Sample analyses are used to evaluate the chemical, physical, and radiological properties of the SST waste and soils that have been contaminated by spills and leaks. This determination will be used to select a disposal alternative that can be executed safely in compliance with RCRA, the *Washington State Hazardous Waste Management Act*, the *National Environmental Policy Act* (NEPA), and the *Atomic Energy Act* regulatory requirements. The waste is extremely varied with respect to radionuclide content and chemical and physical characteristics. This variation among tanks is due to the different nuclear fuel processes and the blending, evaporation, and admixture schemes used since 1944.

A remotely operated method for obtaining samples was developed and implemented for sampling of the liquid and soft, solid tank waste. One to four core samples were removed from each of 15 SSTs in FY 1985 and 1986. Core samples were analyzed by the individual segment removed or as a homogenized sample of all segments retrieved from each core. The detailed waste analysis results are reported in Weiss (1986) and Adams et al. (1986).

The SST waste primarily is comprised of sodium hydroxide; sodium salts of nitrate, nitrite, carbonate, aluminate, and phosphate; and hydrous oxides of iron and aluminum. A relatively small amount of solvents was added to the SST waste during fuel reprocessing as well as water-soluble complexing agents and carboxylic acids from the B Plant waste fractionation process (DOE-RL 1989a). Initial estimates of inventories of nonradioactive chemicals are given in Table 3-4 (WHC 1990e).

Twenty-two of the SSTs contain cyanides, introduced as ferrocyanides in a process to precipitate cesium. Approximately 90% of the ferrocyanide is in 10 of the tanks. Mixtures of ferrocyanide with sodium nitrate or sodium nitrite may undergo explosive reactions when heated to temperatures significantly above current tank storage temperatures. The buildup of hydrogen under the salt cake in 17 of the SSTs has been a concern. The potential for forming flammable or explosive gas mixtures in the tank vapor space or in gas pockets trapped below the surface of the waste must be considered in retrieval operations (RHO 1985). A large effort currently is underway to resolve these concerns.

9 2 1 2 6 4 0 0 8 9 9

A complete, long-term program to characterize SST waste is being conducted by the DOE. This program is detailed in Sasaki (1990). Characterization of all 149 SSTs is scheduled to be completed by September 1998 according to Tri-Party Agreement (Ecology et al. 1990) Milestone M-10-00. The concentration of chemical and radionuclide species of leaked or spilled materials will require future characterization. No sampling plan for these materials has been developed.

3.3.2.3 Waste Designation and Basis. The waste in the SSTs is considered ignitable (due to the presence of nitrate), corrosive, and TCLP toxic. The waste currently is assigned waste codes D001 (ignitable), D002 (corrosive), D005 (TCLP toxic barium), D006 (TCLP toxic cadmium), D007 (TCLP toxic chromium), D008 (TCLP toxic lead), D009 (TCLP toxic mercury), D010 (TCLP toxic selenium), D011 (TCLP toxic silver), D019 (TCLP toxic carbon tetrachloride), and F003 (acetone and hexone). These designations are based on process knowledge and limited sample analyses and may change subject to the results of the analysis and characterization of the waste. The waste designations will be reexamined and revised as necessary as the tanks are characterized.

3.3.2.4 Uncertainty of Waste Designation. The confidence in the current waste code designations is low. The confidence will increase once necessary sampling and analysis work is completed.

3.3.2.5 Schedule for Further Characterization. Characterization of the SST waste is scheduled to be completed in 1998, based on the current waste characterization plan (Sasaki 1990). This plan includes analysis for inorganic and organic materials and the hazardous waste characteristics and criteria (WAC 173-303).

3.3.3 Storage

This section describes the storage unit, provides the volume currently in storage and projected to be added, and assesses the compliance state of the storage unit.

3.3.3.1 Storage Unit and Capacity. Eighty-three of the SSTs are located in the 200 West Area and 66 are in the 200 East Area. The tanks are arranged in 12 tank farms. One hundred thirty-three of the tanks are 22.9 meters in diameter with nominal capacities between 2,000 and 3,800 cubic meters. Sixteen tanks are 6.1 meters in diameter with capacities of 210 cubic meters (WHC 1990d).

3.3.3.2 Amount in Storage. The SST waste consists of 139,500 cubic meters of solids including 25,000 cubic meters of interstitial liquid and supernatant. The volume of waste in each tank farm is shown in Figure 3-7 (WHC 1990b). No waste has been added to the tanks since November 1980 or will be added in the future.

3.3.3.3 Storage Compliance Assessment. The SSTs have released liquid to the soil column. Table 3-5 details the current estimates of releases.

The SSTs will be closed in accordance with schedules negotiated in the Tri-Party Agreement (Ecology et al. 1990). The SSTs were reviewed for compliance with interim status dangerous waste regulations in accordance with Milestone M-21-00. Compliance action schedules and actions for limited compliance with the interim status requirements during the closure are being negotiated.

Currently the following interim status compliance actions are planned (DOE-RL 1991):

- Develop waste analysis plans
- Develop contingency plans
- Develop inspection plans
- Maintain inspection results in the operating record
- Determine if annual fire inspections are required
- Install 23 groundwater-monitoring wells by December 1991 (Milestone M-24-00, Ecology et al. 1990).

A SST system closure/corrective action work plan was submitted in September 1989. Additionally, a supplemental EIS will be prepared addressing SST closure before beginning final closure activities. Closure steps to be taken include removal of pumpable liquid from the tanks by September 1996.

3.3.4 Treatment

This section discusses the current and proposed waste treatment processes.

3.3.4.1 Current Treatment. Ninety-nine of the SSTs have undergone interim stabilization by removal of pumpable liquid. The remaining tanks will undergo interim stabilization operations before disposal. An interim groundwater monitoring program has been established to comply with the interim status dangerous waste requirements found in WAC 173-303 and 40 CFR 265.

Fifty-nine of the 22.9-meter-diameter SSTs and seven of the 6.1-meter-diameter SSTs (WHC 1990d) are assumed to be past leakers. Unique requirements for waste retrieval from these SSTs have not been identified.

3.3.4.2 Proposed Treatment. The waste in the SSTs will undergo in situ disposal or a retrieval and disposal option. The selection of the treatment and/or disposal alternative will be documented through the NEPA process. In situ disposal options being considered include stabilization, grouting, and vitrification. Stabilization and in situ grouting would require closure of the tank farms as a mixed-waste landfill. Grouting reduces the hazard of the chemical waste in the tanks, but is unlikely to delist the waste. In situ vitrification may delist the waste chemically and may allow closure of the tank farms as a radioactive waste site. Both in situ disposal and waste

9 2 1 2 6 4 0 0 9 0 1

retrieval are considered options for clean closure of the SSTs and closure of the SSTs as landfills, in compliance with the dangerous waste regulations.

Waste treated in the SSTs will remain subject to the land disposal restrictions unless the following criteria are met:

- Hazardous waste listings applicable to the waste must be identified, and the waste must be delisted in accordance with regulatory requirements
- The treated waste must not exhibit a hazardous waste characteristic (corrosivity, ignitability, reactivity, or TCLP toxicity)
- Treated waste must meet the treatment standards specified by 40 CFR 268.

Waste that meets these requirements would still be subject to the state RCRA program unless the waste does not exhibit any of the dangerous waste criteria for toxicity, persistence, or carcinogenicity of WAC 173-303-101 through -103.

9 2 1 2 6 4 0 0 9 0 2

3.3.5 Waste Reduction

A waste evaporation program was initiated in 1965 to reduce the volume of liquid waste that potentially could leak and contaminate the soil surrounding the tanks. The supernatant liquids were extracted from the SSTs, evaporated to a slurry, and replaced in the tanks for storage. In 1974 two evaporators were installed and used to evaporate approximately 510,000 cubic meters of water to date.

3.3.6 Variances, Exemptions, Time Extensions

The SST waste consists of radioactive waste mixed with dangerous waste constituents. The SST waste is not subject to land disposal restrictions until it is removed from the tanks because it was all generated and placed in storage before November 27, 1987 (the date when mixed waste became subject to RCRA).

The Tri-Party Agreement (Ecology et al. 1990) provides for development of treatment and disposal units for the SST waste as follows:

- Complete SST interim stabilization by September 1996
- Develop SST waste retrieval technology and complete scale model testing by June 1994
- Initiate full-scale tank demonstration of SST waste retrieval technology by October 1997
- Initiate full-scale farm closure demonstration project by June 2004
- Complete closure of all 149 SSTs by June 2018.

If additional variances, exemptions, or time extensions are required as a result of delays in the development of treatment, storage, or disposal capacity, they will be applied for in accordance with the procedures detailed in the Tri-Party Agreement.

Information on SST waste is provided because of the applicability of land disposal restrictions to the waste upon retrieval and because of the need to consider SST waste in establishing treatment capacity requirements for tank waste.

3.4 242-A EVAPORATOR PROCESS CONDENSATE

The 242-A Evaporator concentrates the low-level Hanford Site waste that is stored and treated in underground DSTs. The tanks store low-heat-generating waste that contains relatively small amounts of fission products.

The 242-A Evaporator concentrates liquid waste by evaporation. This process reduces the waste volume and, hence, the number of DSTs required for storage. The 242-A Evaporator started operating in September 1977; ongoing upgrades will extend its useful life through the year 2000.

In the past (before 1989), the process condensate was routed to retention basins, analyzed for radionuclides and ammonia, and discharged to a crib. In April 1989, dangerous waste and high concentrations of ammonia were detected in the process condensate and discharge to the crib was discontinued. The 242-A Evaporator currently is not operating and is expected to restart in 1992. At this time, the process condensate will be discharged to the LERF and ultimately treated for disposal at the Effluent Treatment Facility.

3.4.1 Generation

This section describes the waste generation process and estimates the generation rate.

3.4.1.1 Process. The 242-A Evaporator concentrates low-level liquid Hanford Site waste by evaporation. The evaporation process also separates the organic constituents and water from the inorganic constituents and radionuclides.

The 242-A Evaporator receives a mixture of waste from tank 241-AW-102 that consists of processed and unprocessed waste as well as recycled liquid that is removed from storage tanks after solids have settled. A simplified schematic of 242-A Evaporator process operations is shown in Figure 3-8.

The 242-A Evaporator heats the feed, at reduced pressure, and evaporates off some of the water and volatile organic constituents from the slurry. The vapor fraction and slurry fraction are then processed separately. The vapor fraction is condensed, filtered, and discharged to the LERF as process condensate. If the process condensate does not meet discharge limits, it is pumped back to the 242-A Evaporator feed tank for processing. The remaining super saturated slurry is recirculated. When the slurry is sufficiently concentrated, it is pumped to underground storage in DSTs.

9 2 1 2 6 4 0 0 9 0 3

3.4.1.2 Generation. Upon restart, the 242-A Evaporator will generate up to 4,500 cubic meters of process condensate per month until the LERF (Chapter 3.0, Section 3.4.3) is full. The 242-A Evaporator will then be shut down for a short time. The 242-A Evaporator will restart when the Evaporator/PUREX Condensate Treatment Facility becomes operational.

When the 242-A Evaporator restarts, it will increase its processing rate over a 4-month period until process condensate is being generated at a rate of 6,000 cubic meters per month or 72,000 cubic meters per year.

3.4.2 Characterization

The process condensate is a liquid low-level waste consisting of the condensed vapor fraction from the evaporation process and raw water. The process condensate is designated a dangerous waste because of toxicity (WT02) and the presence of spent nonhalogenated solvents such as acetone and methyl isobutyl ketone (hexone) (F003).

3.4.2.1 Process Knowledge. The 242-A Evaporator receives liquid waste from most of the Hanford Site waste generators and processes. This waste is processed through the 242-A Evaporator in different batches according to their classification by total organic carbon content, transuranic content, and effects on the evaporator process.

Dilute complexed waste is received from processing operations at B Plant. This waste contains high amounts of total organics and complexing agents.

Dilute noncomplexed waste is a mixture of T Plant and S Plant waste, PFP supernate, salt well liquids, 300 and 400 Area waste (including fuel fabrication waste), PUREX Plant neutralized decladding waste supernate, salt well liquids (Chapter 3.0, Section 3.3), and ammonia scrubber waste (Chapter 3.0, Section 3.6) (WHC 1990e).

3.4.2.2 Sample Analyses. Process condensate was sampled for characterization from August 1985 to March 1989 during the processing of a variety of evaporator feeds. The average concentration of each analyte detected is shown in Table 3-6 (WHC 1990f).

3.4.2.3 Waste Designation and Basis. The process condensate is designated a dangerous waste because of toxicity (WT02). Forty-seven substances potentially present in the process condensate were determined to have toxic categories associated with them. The contribution of each substance to the percent equivalent concentration was calculated in accordance with WAC 173-303-101. The resulting equivalent concentration sum is 10% higher than the limit of 0.001%; therefore, the process condensate is a toxic dangerous waste. The dominant contributor to the equivalent concentration sum is ammonia.

Additionally, the process condensate is designated a dangerous waste because it is derived from waste that contains the spent nonhalogenated solvents acetone, hexone, and 1-butanol (F003) as well as methyl ethyl ketone and 2-butanone (F005) (WHC 1990f).

9 2 1 2 6 4 0 0 9 0 4

3.4.2.4 Uncertainty of Waste Designation. The current designations are considered accurate.

3.4.2.5 Schedule for Further Characterization. The process condensate will be characterized after treatment (Chapter 3.0, Section 3.4.4) to confirm that it is no longer designated dangerous.

3.4.3 Storage

The 242-A Evaporator currently is not operating and is being modernized. Process condensate, therefore, is not being generated and no process condensate currently is in storage. On restart of the 242-A Evaporator, process condensate will be stored at the LERF until a treatment system is operational. The LERF can hold about 49,000 cubic meters of process condensate, which is the volume projected to be generated between December 1991 and October 1992.

The LERF is under construction and will be used to store process condensate generated by the 242-A Evaporator when it is restarted. The LERF consists of surface impoundment storage units that will comply with both interim status and final status design and operation requirements. A Part B permit application was prepared and submitted in accordance with Tri-Party Agreement (Ecology et al. 1990) Milestone M-20-47 detailing the compliance of the LERF with RCRA final status design and operation standards. All dangerous waste will be removed from the LERF by June 1995 in accordance with Tri-Party Agreement Milestone M-26-04.

3.4.4 Treatment

Planned treatment of the process condensate stored at the LERF is as follows. The Effluent Treatment Facility will treat process condensate and prepare the waste for disposal. The current conceptual design is described below.

- The first process step is to filter out particles down to the 0.5-micron range. The pH of the waste stream is then lowered to four or five by addition of sulfuric acid. This adjustment converts ammonia to ammonium so it will be rejected during reverse osmosis, converts carbonate and bicarbonate to carbon dioxide, and inhibits microbial growth.

- Next, an organic destruction unit uses hydrogen peroxide and/or ozone with ultraviolet light to degrade organic molecules into carbon dioxide and water. An ultrafiltration step removes particles in the 0.01 micron range.

- Degasification removes the carbon dioxide generated during neutralization. Then, reverse osmosis removes aqueous salts and metal ions, producing a secondary waste stream that will be further concentrated before disposal.

9 2 1 2 6 4 0 0 9 0 5

- The stream next undergoes ion exchange and is neutralized. Three tanks hold the treated effluent for sampling before discharge (current plans call for discharge to a state-approved land disposal site) or recycling (if required). The treated liquid effluent will be delisted before discharge.

- An evaporation process further reduces the volume of waste generated in the primary treatment. The bottoms product is dewatered and stored in 0.21-cubic-meter drums. If the bottoms product is a dangerous waste, it will be sent to the Hanford Central Waste Complex and treated at the WRAP Facility. If it is not dangerous, the drums will be disposed of at low-level waste burial grounds.

The Effluent Treatment Facility is scheduled to begin operations in October 1994.*

3.4.5 Waste Reduction

Planned treatment of the process condensate will result in a nondangerous liquid stream acceptable for discharge to the ground and a solid waste form acceptable for land disposal.

The treatment unit will reduce each 245 cubic meters of process condensate to one 0.21-cubic meter drum of solid waste; this is a waste reduction factor of 1,176. This reduction is based on two assumptions: the average concentration of ammonium in process condensate is 410 ppm and the waste product in the drums is 100% ammonium sulfate.

3.4.6 Variances, Exemptions, Time Extensions

The 242-A Evaporator process condensate is a low-level mixed waste that is land disposal restricted because it contains solvent list (40 CFR 268.30) constituents. Currently process condensate is not generated because the 242-A Evaporator is shut down for modifications. Additional process condensate will be generated when the 242-A Evaporator is restarted.

The Tri-Party Agreement (Ecology et al. 1990) provides for continued storage of solvent waste (40 CFR 268.30) until treatment capacity is developed for these wastes. The agreement requires treatment and disposal capacity for this waste to be developed on the following schedule:

- Cessation of discharge of process condensate to the LERF by December 1994

- Removal of all dangerous waste residues from the LERF by June 1995.

Future process condensate generated will be discharged to and stored in the LERF until the Effluent Treatment Facility is constructed and operational. The Effluent Treatment Facility will treat process condensate to meet the land

---

*This schedule date currently is being evaluated.

disposal restrictions. Additionally, a petition is being prepared to delist the effluent from the Effluent Treatment Facility to allow land disposal of the treatment residues.

Part B permit applications will be submitted for the 242-A Evaporator, the LERF, and the Effluent Treatment Facility in June 1993 or as agreed to by DOE, EPA, and Ecology. The delisting petition for the Effluent Treatment Facility will be submitted at least 18 months before facility startup.

If additional variances, exemptions, or time extensions are required because of delays in the development of treatment, storage, or disposal capacity, they will be applied for in accordance with the procedures detailed in the Tri-Party Agreement.

3.5 4843 SODIUM STORAGE FACILITY WASTE

The 4843 Sodium Storage Facility received radioactive and nonradioactive alkali metal waste from Hanford Site generators. The predominant generator of alkali metal waste was the FFTF.

Most of the waste received at the 4843 Sodium Storage Facility consisted of alkali metals and retired equipment from liquid sodium processes. The bulk of material presently in storage is sodium derived from normal FFTF operations and a pump leak at the FFTF.

The waste stored in the 4843 Sodium Storage Facility currently is untreated. The nonradioactive material will be sent offsite for treatment while the radioactive portions would be treated and disposed of onsite with methods to be determined. This facility is scheduled for closure and closure plans are being prepared. Waste in storage now will be transferred to the Hanford Central Waste Complex where it will be stored until future processing and disposal facilities are made available.

3.5.1 Generation

This section discusses the waste generation process and rate.

3.5.1.1 Process. The FFTF is an experimental reactor that uses liquid sodium in the primary coolant loop. One cubic meter of sodium and 0.5 cubic meter of structural and other equipment were generated by a pump leak at the FFTF.

Seven drums of waste radioactive sodium have been generated at the FFTF as a result of normal operations over the past 10 years. The rate of future waste production is anticipated to decrease because of a modification in the FFTF procedures that permits recycling of some of this material.

3.5.1.2 Generation. The 4843 Sodium Storage Facility became operational in September 1987 to receive radioactive and nonradioactive alkali metal waste from Hanford Site generators. Most of the waste received at the 4843 Sodium Storage Facility consists of spill residue and retired equipment from liquid sodium processes at the FFTF. The 4843 Sodium Storage Facility no longer receives waste for storage.

9 2 1 2 6 4 0 0 9 0 7

3.5.2 Characterization

This section discusses the available waste characterization information. Information based on process knowledge and sample analysis is provided along with the waste designation and basis. The uncertainty related to the designation and the schedule for further analysis also are discussed.

3.5.2.1 Process Knowledge. All material in the 4843 Sodium Storage Facility is solid, nonradioactive, or low-level radioactive waste. All of the waste sodium in the storage unit has been generated at the FFTF from normal operations, a pump leak, and miscellaneous experimental apparatus.

3.5.2.2 Sample Analyses. The waste in the 4843 Sodium Storage Facility is characterized based on process knowledge. No further analysis has been considered at this time.

3.5.2.3 Waste Designation and Basis. The alkali metal waste received for storage at the 4843 Sodium Storage Facility is characterized as reactive (D003).

3.5.2.4 Uncertainty of Waste Designation. The waste characterization certainty is considered high, based on derivation of the waste from sodium cooling loops and experimental apparatus.

3.5.2.5 Schedule for Further Characterization. No further characterization of the waste stored in the 4843 Sodium Storage Facility is anticipated. During future treatment the residues will be analyzed chemically to verify completeness of treatment and to designate the waste for proper disposal.

3.5.3 Storage

This section describes the storage unit, provides the amount in storage, and assesses the compliance status of the unit.

3.5.3.1 Description of Storage Unit and Capacity. The 4843 Sodium Storage Facility Waste storage unit is located in the northwest corner of the 400 Area of the Hanford Site. There are no other buildings in the immediate vicinity of the 4843 Sodium Storage Facility. The gravel area surrounding the building is clear of combustibles for several hundred meters. The building is 12 meters long, 12 meters wide, and 6 meters high. The building has an all-steel structural frame and sides and a gable roof, all of which are insulated with fiberglass batting. The floor is a concrete slab. Building access is through two large roll-up doors in the east and west ends and through personnel doors in the southeast and northwest corners.

The 4843 Sodium Storage Facility is used to store radioactive and nonradioactive alkali metal waste, including sodium, lithium, and a sodium/potassium mixture, which has been generated at the FFTF and other operations at the Hanford Site that use alkali metals. Waste is segregated within the building depending on whether the alkali metal is radioactive or nonradioactive. Radioactive alkali metal waste is stored in 0.21-cubic meter

drums, various piping sections, and 'hot-traps.' Nonradioactive alkali metal waste is stored in the southern half of the building. The radioactive and nonradioactive storage areas are separated by a rope divider.

The 4843 Sodium Storage Facility Waste only accepted solid alkali metal waste properly packaged in U.S. Department of Transportation-specified containers. To keep the reactive alkali metal waste stable, these containers are flushed with inert gas (argon) and sealed to provide a nonreactive atmosphere.

The estimated capacity of the 4843 Sodium Storage Facility Waste is 84,000 kilograms of alkali metal (DOE-RL 1989b).

3.5.3.2 Amount in Storage. The current inventory of the 4843 Sodium Storage Facility Waste includes sodium and sodium-contaminated waste including 941 kilograms of elemental sodium, 68 kilograms of a sodium-potassium alloy, 2.5 cubic meters of nonradioactive lithium, sodium-contaminated piping and tanks, and miscellaneous experimental apparatus.

3.5.3.3 Storage Compliance Assessment. The 4843 Sodium Storage Facility Waste was reviewed for compliance with interim status dangerous waste regulations in accordance with Tri-Party Agreement (Ecology et al. 1990) Milestone M-21-00. No areas of noncompliance with interim status requirements were noted. The facility is now scheduled for closure. The appropriate closure plans are being prepared and it is anticipated that closure will be completed in FY 1993.

3.5.4 Treatment

This section discusses the current and proposed waste treatment.

3.5.4.1 Current Treatment. The 4843 Sodium Storage Facility is a storage unit. The waste stored in this unit currently is not being treated.

3.5.4.2 Proposed Treatment. Original plans called for this facility to be fully permitted as a RCRA storage unit. A Part B permit application was prepared and submitted for internal review in March 1991. Subsequently a decision was made to close the 4843 Sodium Storage Facility. The closure plans are being prepared for review by Westinghouse Hanford Company (Westinghouse Hanford) and DOE. According to the provision of these plans, the nonradioactive alkali metal waste will be sent offsite to an approved facility for treatment and disposal while the radioactive alkali waste will be transported to the Hanford Central Waste Complex for storage until appropriate treatment and disposal systems are available. Some nonradioactive waste already has been shipped offsite. It is anticipated that the closure will be completed during FY 1993. A considered method for treatment involves the conversion of sodium to sodium hydroxide and then to sodium carbonate. The sodium carbonate would be designated and disposed of in accordance with applicable regulations.

9 2 1 2 6 4 0 0 9 0 9

3.5.5 Waste Reduction

The 4843 Sodium Storage Facility is a storage unit that received alkali metal waste generated on the Hanford Site. The 4843 Sodium Storage Facility does not exercise direct control over the quantities accepted for storage. Waste generated at the 4843 Sodium Storage Facility, though minimal, is managed to ensure that the quantity and toxicity are minimized.

The 4843 Sodium Storage Facility has an operating procedure for the disposal of waste generated at the 4843 Sodium Storage Facility Waste that includes proper responses for cleanup after dangerous waste spills. The response to dangerous waste spills is aimed at minimizing liquid and material used during cleanup. Conversion to carbonate, if this is the chosen treatment method, would remove the entire inventory of elemental sodium waste (see Chapter 3.0, Section 3.5.4.2).

3.5.6 Variances, Exemptions, Time Extensions

The 4843 Sodium Storage Facility Waste stores low-level mixed waste that is restricted from land disposal by the Third-Third Promulgation (55 FR 22520).

The 4843 Sodium Storage Facility Waste will be closed as described in the closure plan. Variances have been negotiated to allow storage of the waste at the 4843 Sodium Storage Facility Waste until the waste can be transferred to the Hanford Central Waste Complex for long-term storage or, for the nonradioactive waste, to an approved offsite facility for treatment and disposal.

3.6 PUREX AMMONIA SCRUBBER WASTE

The ammonia scrubber waste is a low-level mixed waste liquid effluent generated by the PUREX Plant. During PUREX Plant operations, approximately 7,600 cubic meters of ammonia scrubber feed are generated per year. The most recent fraction of ammonia scrubber feed was treated with sodium hydroxide in preparation for tank storage. The resulting ammonia scrubber waste is designated as corrosive (D002) as well as toxic (WT02) and is a land disposal restricted waste. Current plans for any future operations are to use an ammonia destruction process and, hence, significantly reduce the volume of dangerous waste generated by the ammonia scrubber system. However, the PUREX Plant was placed in a standby condition and other plant configurations and upgrades for handling the ammonia scrubber feed may be considered during the standby period.

3.6.1 Generation

This section describes the waste generation process. If the PUREX Plant restarts, estimates of the future waste generation will be provided after the PUREX Plant restart plans have been developed.

3.6.1.1 Process. The PUREX Plant receives irradiated zirconium clad fuel from N Reactor, removes the cladding from the fuel, and dissolves the fuel in nitric acid. The dissolved fuel is processed through several solvent extraction steps to separate the plutonium, uranium, and neptunium from the fission products contained in the fuel. The PUREX ammonia scrubber feed is generated when water is sprayed to adsorb ammonia gas generated by the decladding and metathesis reactions from the dissolver off-gas stream.

In the past, the ammonia scrubber feed was boiled in a concentrator to separate the bulk of the entrained fission products from the ammonia scrubber discharge which was disposed of to a crib. The remaining ammonia scrubber waste was treated to comply with DST storage specifications and transferred to DSTs as shown in Figure 3-9.

In late 1987, it was determined that the ammonium hydroxide concentration in the ammonia scrubber condensate sometimes exceeded 1%, making it a dangerous (toxic) waste as designated by state regulations, and therefore not appropriate for discharge to the crib. An interim process was established in which ammonia scrubber feed no longer was concentrated for discharge, but was treated for tank storage and transferred as ammonia scrubber waste to underground storage tanks. The treatment consisted of adding sodium hydroxide to adjust the pH to greater than 12 and adding sodium nitrite to minimize tank corrosion as shown in Figure 3-10.

Current plans for processing the future ammonia scrubber feed stream include ammonia destruction so a significant portion of the stream will no longer be designated a dangerous or hazardous waste, as shown in Figure 3-11. This treatment system was originally scheduled to be completed in 1991. The need for completion of this system will be evaluated based on the PUREX Plant restart decision.

3.6.1.2 Generation. Approximately 15 cubic meters of ammonia scrubber feed is generated per metric ton of uranium processed. The amount of ammonia scrubber waste generated by month since January 1988 is shown in Figure 3-12.

The planned ammonia destruction system (Chapter 3.0, Section 3.6.5) is expected to reduce the generation rate of land disposal restricted waste by this process from 15 cubic meters per metric ton of uranium processed to 2 cubic meters per metric ton of uranium processed. If the PUREX Plant restarts, the projected yearly generation of PUREX ammonia scrubber waste will be determined after the PUREX Plant restart plans have been developed.

3.6.2 Characterization

This section discusses the available waste characterization information. Information based on process knowledge and sample analyses is provided along with the waste designation and its basis, the uncertainty related to the designation, and the schedule for further analysis.

3.6.2.1 Process Knowledge. The ammonia scrubber feed waste stream is comprised of water, ammonium hydroxide, dissolved ammonia, trace amounts of radionuclides, and fluoride and nitrate ions from the ammonium fluoride-ammonium nitrate solution used in the dissolver. The pH of the ammonia

9 2 1 2 6 4 0 0 9 1 1

scrubber feed stream before treatment for tank storage is between 8 and 10. In the past, the ammonia scrubber waste was similar in composition to the ammonia scrubber feed except that 99% of the ammonia present in the ammonia scrubber feed was removed by volatilization during waste concentration and was discarded into the ammonia off-gas system or with the ammonia scrubber condensate waste stream.

3.6.2.2 Sample Analyses. The management of the PUREX ammonia scrubber waste can be divided as follows:

- The ammonia scrubber feed produced before late 1987, most of which was evaporated, condensed, and discharged to cribs as ammonia scrubber discharge (Figure 3-9)
- The total ammonia scrubber feed generated after crib closure in 1987, which was then treated and sent as ammonia scrubber waste to DSTs for storage (Figure 3-10).

The ammonia scrubber discharge was sampled randomly four times over a 23-month period during routine operation, once in 1985 and three times in 1987. The number of chemical analytes detected was 12, although not every analyte was detected at each sampling time. Table 3-7 summarizes the analytical results (WHC 1990g).

The ammonia scrubber feed stored in the DSTs is treated with sodium hydroxide and sodium nitrite. Available analytical data for this stream are shown in Table 3-8.

3.6.2.3 Waste Designation and Basis. Both the historical and PUREX ammonia scrubber waste streams are toxic liquid, noncombustible low-level wastes classified as wastewaters.

The ammonia scrubber feed stream treated and sent to tank storage is toxic because of the concentration of ammonia. Pursuant to WAC 173-303-070, its designation is WT02. Treating the ammonia scrubber feed with sodium hydroxide, to raise the pH above 12, occasionally renders the resulting ammonia scrubber waste corrosive (D002) as well and creates land disposal restricted waste. Future ammonia scrubber waste may still be corrosive but will be generated in small volumes (WHC 1990g).

3.6.2.4 Uncertainty of Waste Designation. Waste designations for the ammonia scrubber waste recently sent to tank storage are based on sample analyses. Actual sample results show that the ammonia concentration exceeds 1 wt% during the first few hours of the decladding reaction. The dangerous waste designation due to ammonia for these streams is only a result of exceeding the 1 wt% limit for a few hours during each decladding reaction. The average concentration for ammonia in this waste is less than 0.1 M as shown in Table 3-8.

Based on the chemicals added to the ammonia scrubber waste that was sent to DSTs and on sample analyses, the ammonia scrubber waste is a toxic (WT02) and may be a corrosive (D002) land disposal restricted waste.

3.6.2.5 Schedule for Further Characterization. The ammonia scrubber waste currently stored in tanks, together with any future ammonia destruction waste to be stored in tanks, will be characterized before planned treatment and disposal of the tank contents. The tank contents will be concentrated at the 242-A Evaporator to reduce the volume of waste requiring grout disposal. The streams ultimately will be disposed of by grout processing. The identification of additional waste characterization tasks will be negotiated among Ecology, EPA, and DOE (WHC 1990g).

3.6.3 Storage

This section provides the volume currently in storage and assesses the compliance state of the storage unit.

3.6.3.1 Storage Unit and Capacity. The PUREX ammonia scrubber waste is stored in underground DSTs in the 200 East Area of the Hanford Site. The tank farms have twenty-eight 4,300 cubic meters tanks, 26 of which are used to store nonaging waste. The total contents of the DSTs are addressed as a single waste stream in Chapter 3.0, Section 3.1.

3.6.3.2 Amount in Storage. The amount of DST waste in storage contributed by ammonia scrubber waste is 5,900 cubic meters. The volume of waste requiring disposal as grout will decrease when the waste is evaporated before grout disposal. The capacity of the tank farms for continued waste storage is discussed in Chapter 3.0, Section 3.1.

3.6.3.3 Storage Compliance Assessment. The PUREX ammonia scrubber waste is stored in the DSTs. The DSTs were reviewed for compliance with interim status dangerous waste regulations in accordance with Tri-Party Agreement (Ecology et al. 1990) Milestone M-21-00. The results of the compliance assessment are provided in Chapter 3.0, Section 3.1.3.3.

3.6.4 Treatment

This section discusses the ammonia scrubber waste current and proposed waste treatment processes.

3.6.4.1 Current Treatment. The ammonia scrubber waste has been treated for storage by adding sodium hydroxide and sodium nitrite to control tank corrosivity. The stream in the DSTs will be concentrated at the 242-A Evaporator and disposed of at the GTF.

3.6.4.2 Proposed Treatment. In the current plans, the ammonia in the ammonia scrubber feed will be destroyed by the addition of nitrite. The process will consist of five steps: neutralize ammonia scrubber effluent, concentrate neutralized effluent, destroy the ammonia, adjust pH and nitrite, and transfer to tank storage (WHC 1990g). Figure 3-11 includes a schematic of this process.

The first step, neutralization of the effluent from the ammonia scrubbers, will be accomplished by adding nitric acid. The second step is concentrating the neutralized effluent produced by the first step. The

9 2 1 2 6 4 0 0 9 1 3

concentration process will produce a nonhazardous, nondangerous stream that is primarily water. This stream will go to the Evaporator/PUREX Condensate Treatment Facility for treatment and disposal. This facility is described in Chapter 3.0, Section 3.4.4.

The third step will be destroying the ammonia by reaction with sodium nitrite. The nitrite ions will react at elevated temperatures with the ammonium ions in the concentrated neutralized effluent to produce water and nitrogen gas. The nitrite ions will react to become nitrate ions, accounting for most of the dissolved solids content of the resulting radioactive liquid waste.

The fourth step will be pH and nitrite adjustment. Sodium hydroxide will be added to raise the pH of the liquid above 12, and additional sodium nitrite will be added, if necessary, to minimize corrosion in the DSTs.

This entire treatment system (Milestone M-17-02) (Ecology et al. 1990) is scheduled to be completed by 1995, but this date will be evaluated based on a PUREX Plant restart decision.

3.6.5 Waste Reduction

Currently 15 cubic meters of ammonia scrubber feed is generated and stored in tanks for every metric ton of uranium processed. In the future, the volume of ammonia scrubber waste will be minimized by the use of an ammonia destruction process, producing a final volume of only 2 cubic meters of ammonia destruction waste per metric ton of uranium processed (WHC 1990e).

In addition, all ammonia scrubber waste that is stored in tanks will be evaporated with other DST waste to reduce the volume requiring disposal at the GTF (Chapter 3.0, Section 3.1).

3.6.6 Variances, Exemptions, Time Extensions

The ammonia scrubber waste is a low-level mixed waste restricted from land disposal by the Third-Third Promulgation (55 FR 22520). The Third-Third Promulgation provided for a 2-year national capacity variance from the land disposal restrictions for Third-Third mixed waste. This variance allows continued storage of these wastes. In the event that sufficient treatment capacity for this waste is not available at the expiration of this variance (August 1992), the Tri-Party Agreement (Ecology et al. 1990) will allow continued storage of this waste until sufficient treatment capacity is available in accordance with the schedules in the agreement.

If additional variances, exemptions, or extensions of time are required as a result of delays in the development of treatment, storage, or disposal capacity, they will be applied for in accordance with the procedures detailed in the Tri-Party Agreement.

9 2 1 2 6 4 0 0 9 1 4

3.7 PUREX PROCESS CONDENSATE

The PUREX process condensate is a low-level mixed waste liquid effluent generated by the PUREX Plant. As of April 1, 1990, approximately 4,800 cubic meters of PUREX process condensate have been generated and are stored in DSTs.

The PUREX process condensate is distilled water with a nitric acid content that can exceed 0.01 M (pH 2). Additionally, the stream contains various radionuclides. Until 1987, the PUREX process condensate stream was discharged directly to a crib. After closure of the crib and to prevent corrosive (pH <2) waste from being discharged into the new crib, potassium hydroxide was added and the stream was routed through a tank with calcium carbonate (limestone) before being discharged. In early 1989 the stream was temporarily rerouted to DSTs during a reevaluation of its dangerous waste designation. The PUREX process condensate transferred to DSTs was designated corrosive (D002).

3.7.1 Generation

This section describes the waste generation process. If the PUREX Plant is selected as the preferred alternative for the disposition of stored reactor fuel, estimates of the future generation rate will be provided after the PUREX Plant restart plans have been developed.

3.7.1.1 Process. The PUREX Plant receives irradiated zirconium clad fuel from N Reactor, removes the cladding from the fuel, and dissolves the fuel in nitric acid. The dissolved fuel is processed through several solvent extraction steps to separate the plutonium, uranium, and neptunium from the fission products contained in the fuel.

The PUREX process condensate stream is generated by the condensing of vapors from uranium/nitric acid concentration and recycle processes within PUREX. This condensate contains trace quantities of nitric acid. Before 1987, the condensate was monitored for radioactivity and discharged to a crib. In 1987, the PUREX process condensate system was upgraded to include a potassium hydroxide neutralization system and a calcium carbonate neutralization bed to neutralize the traces of nitric acid in the PUREX process condensate before discharge to a second crib (Figure 3-13).

In 1989, during a reevaluation of the designation of the PUREX process condensate stream to ensure that no improperly designated waste was being discharged to the environment, the PUREX process condensate waste stream was treated to meet tank storage specifications and to be transferred to the DSTs (Figure 3-14).

Current plans for future operations are to neutralize and treat the PUREX process condensate waste stream (Figure 3-15), but these plans will be evaluated based on a PUREX Plant restart decision.

3.7.1.2 Generation. Approximately 44 cubic meters of PUREX process condensate is generated per metric ton of uranium processed.

9 2 1 2 6 4 0 0 9 1 5

3.7.2 Characterization

This section discusses the available waste characterization information. The information is gathered from process knowledge and sample analyses data. Preliminary waste designation and basis, the uncertainty related to the designation, and the schedule for further analysis is provided.

3.7.2.1 Process Knowledge. Before 1986, the traces of nitric acid that distilled over with the PUREX process condensate were not neutralized before discharging that stream to a crib. After 1986, a neutralization system was installed that included controlled addition of potassium hydroxide to the PUREX process condensate, a pH polishing tank containing calcium carbonate (crushed limestone), and pH monitoring instrumentation (Figure 3-13) (WHC 1990h).

3.7.2.2 Sample Analysis. During PUREX operations, PUREX process condensate is sampled as indicated below.

- Pre-1989--PUREX process condensate was sampled with a weekly composite sampler system. Samples were collected in a tank over a 1-week time period and analyzed for key radionuclides, pH, organics, and uranium.
- 1989-1990 Stabilization Run--PUREX process condensate was batch sampled for pH, NO_2, and uranium and sent to DSTs.
- If the PUREX Plant is restarted, future PUREX process condensate will be sampled with a RCRA-qualified composite sampler system. Samples will be collected over a 1-week time period and will be sent to the laboratory to analyze for key radionuclides, pH, organics, and uranium.

Before 1989, samples of the PUREX process condensate stream going to the crib were analyzed. The PUREX process condensate was randomly sampled eight times over a 24-month period during routine operations, once in 1985, twice in 1986, and five times in 1987. The number of chemical constituents detected was 46, although not every constituent was detected in each sample. Table 3-9 summarizes the analytical results (WHC 1990h).

3.7.2.3 Waste Designation and Basis. Before 1987, the PUREX process condensate waste stream occasionally was corrosive (pH less than 2) due to the nitric acid present in the PUREX process condensate. Under these conditions, the occasionally corrosive stream would have been designated as a corrosive (D002). After the neutralization system was installed in 1987, the PUREX process condensate stream was nondangerous. During a reassessment of the designation of the PUREX process condensate waste stream to ensure that no discharge to the environment of improperly designated waste was occurring, the PUREX process condensate was rerouted to DSTs in early 1989. The PUREX process condensate waste stream sent to the DSTs was treated with sodium hydroxide (to adjust pH to above 12) and sodium nitrite (to control tank corrosivity). This treated waste was designated corrosive D002 (Figure 3-14).

If the PUREX Plant is restarted, future plans include operation of a neutralization system to adjust the PUREX process condensate pH above 2

9 2 1 2 6 4 0 0 9 1 6

without closely approaching 12.5. Upon activation of this system, PUREX process condensate will be discharged as nondangerous waste (Figure 3-15).

3.7.2.4 Uncertainty of Waste Designation. The PUREX process condensate stream designation is based on process knowledge and sample analyses that are representative of the normal process. There are potential upset conditions and unusual occurrences that could create a corrosive dangerous waste. However, no unusual or abnormal events have occurred that would change the waste designation for the waste sent to DSTs.

3.7.2.5 Schedule for Further Characterization. Future characterization of PUREX process condensate is discussed in Chapter 3.0, Section 3.7.2.2.

3.7.3 Storage

This section discusses the PUREX process condensate waste storage and capacity, identifies stored quantities, and assesses the compliance status of the storage unit.

3.7.3.1 Storage Unit and Capacity. The PUREX process condensate waste is stored in underground DSTs in the 200 East Area of the Hanford Site. These tanks are discussed in Chapter 3.0, Section 3.1.

3.7.3.2 Amount in Storage. As of April 1, 1990, approximately 4,800 cubic meters of PUREX process condensate waste were in storage in the DSTs.

3.7.3.3 Storage Compliance Assessment. The previously generated PUREX process condensate is stored in the DSTs. The DSTs were reviewed for compliance with interim status dangerous waste regulations in accordance with Tri-Party Agreement (Ecology et al. 1990) Milestone M-21-00. The results of the compliance assessment are provided in Chapter 3.0, Section 3.1.3.3.

If the PUREX Plant is restarted, future PUREX process condensate will not be a dangerous waste.

3.7.4 Treatment

This section discusses the PUREX process condensate current and proposed waste treatment processes.

3.7.4.1 Current Treatment. The PUREX process condensate has been treated for storage by adding sodium hydroxide and sodium nitrite to control tank corrosivity.

3.7.4.2 Proposed Treatment. Current plans call for elimination of the sodium hydroxide and sodium nitrite additions and operation of a continuous neutralization system to adjust the PUREX process condensate waste stream pH to greater than 2 and less than 12.5. The system will include in-line pH monitors providing input to automatic controllers that add potassium hydroxide as necessary to maintain a nondangerous waste stream (Figure 3-15). This

9 2 1 2 6 4 0 0 9 1 7

stream will be treated further at the Evaporator/PUREX Condensate Treatment Facility described in Chapter 3.0, Section 3.4. These plans will be evaluated based on a PUREX restart decision.

3.7.5 Waste Reduction

The waste reduction practices for the PUREX process condensate stream are to control the pH of the stream such that it is no longer a dangerous waste. This will eliminate the generation of this waste stream.

3.7.6 Variances, Exemptions, Time Extensions

As discussed in Chapter 3.0, Section 3.7.4.2, the PUREX process condensate stream will not be generated with dangerous waste constituent concentration levels in the future, if the PUREX Plant is restarted. Previously generated PUREX process condensate waste was restricted from land disposal by the Third-Third Promulgation (55 FR 22520). As a component of the DST contents, PUREX process condensate will be treated and disposed of in accordance with the plans for DST low-level waste discussed in Chapter 3.0, Section 3.1.6.

The Third-Third Promulgation provided for a 2-year national capacity variance from the land disposal restrictions for mixed waste. This variance allows continued storage of these wastes. In the event that sufficient treatment capacity for this waste is not available at the expiration of this variance (August 1992), the Tri-Party Agreement (Ecology et al. 1990) will allow continued storage of this waste until sufficient treatment capacity is available in accordance with the schedules in the agreement.

If additional variances, exemptions, or extensions of time are required as a result of delays in the development of treatment, storage, or disposal capacity, they will be applied for in accordance with the procedures detailed in the Tri-Party Agreement.

3.8 HEXONE WASTE

One hundred thirty-six cubic meters of liquid low-level mixed waste, primarily hexone, formerly were stored in two underground tanks near the 202-S Plant in the 200 West Area. The waste was distilled to remove radionuclides and next will be incinerated to destroy the hexone. The distillate now is stored in four tank cars. Hexone waste no longer is being generated.

3.8.1 Generation

This section describes the waste generation process.

3.8.1.1 Process. The 202-S Plant used solvent extraction with hexone to separate uranium and plutonium from reactor fuel. The 202-S Plant operated from 1951 to 1967 (DOE 1987).

3.8.1.2 Generation. The hexone was stored in two underground tanks. Tank 276-S-141 contained 76 cubic meters of hexone that never was used. Tank 276-S-142 contained 53 cubic meters of mixed solvents and 8 cubic meters of water. The mixed solvents were 65% hexone, 25% N-alkanes (normal paraffin hydrocarbon), and 9% tributyl phosphate that were added to the tank as spent solvent from a one-time americium extraction campaign at the 202-S Plant. Tank 276-S-142 also contained 8 cubic meters of water, most of which was added to the tank to flush transfer piping. The tanks also contained about 0.4 cubic meter of sludge, primarily tank corrosion products.

The hexone waste no longer is being generated.

3.8.2 Characterization

The hexone (methyl isobutyl ketone) waste is a dangerous liquid low-level waste. The dangerous waste codes for this material are F003 (hexone), WT02 (toxic dangerous waste), and D001 (ignitable). The result of a chemical analysis for each tank (before distillation) is shown in Table 3-10. The sampling and analyses were performed in 1987.

After distillation, there are 16,691 gallons of pure hexone in two tank cars and 12,198 gallons of a mixture of hexone, kerosene, and small amounts of tributyl phosphate (less than 1%) in two other tank cars. Also in the latter two tank cars are 4,171 gallons of water stored with hexone (1 to 2%). The water separates into a distinct layer in the tank cars. Between the four cars, there is 0.71 curie of tritium.

The designations are considered accurate and no further characterization is planned until the hexone waste is treated for disposal (incinerated). At that time (1991 or 1992), the treatment residue (incinerator ash) will be sampled and characterized by the incinerator operator to determine whether additional treatment is required before disposal.

3.8.3 Storage

This section discusses the hexone storage unit and its capacity, provides the volume currently in storage, and assesses the compliance status of the storage unit.

3.8.3.1 Storage Unit and Capacity. The 28,889 gallons of hexone waste is stored in four 10,000-gallons capacity railroad tank cars.

3.8.3.2 Amount in Storage. See Section 3.8.2.

3.8.3.3 Storage Compliance Assessment. A treatment and storage closure plan detailing compliance with regulations will be submitted in November 1992. The tanks currently are being closed under interim status.

9 2 1 2 6 4 0 0 9 1 9

3.8.4 Treatment

During 1990, the waste was treated by distillation to remove radionuclides to allow disposal of the bulk of the waste by incineration. The next treatment step will be incineration to destroy the hexone. This treatment is being conducted under interim status.

Hexone waste will be incinerated at an offsite location to reduce the hexone to carbon dioxide and water. A flowsheet summarizing the planned treatment and disposal of hexone waste is shown in Figure 3-16. The treatment of hexone waste is scheduled to be completed in 1991 or early 1992.

Distillation of the liquid waste produced three primary product streams: the "clean" distillate, the tar-like bottoms in the distillation vessel, and the offgases of the distillation. The distillate is being stored for further processing (offsite incineration). There also remains in tanks 261-S-141 and 261-S-142 a liquid level of under 50 gallons and small amounts of sludge.

The tar-like bottoms will remain in the distillation vessels, and the vessels will be sealed for disposal. The vessels are 0.9 meter in diameter and 1.9 meters long, with an approximate weight of 860 kilograms. If the spent vessel is a transuranic waste, it will be stored at the Hanford Central Waste Complex until it is packaged for shipment to the WIPP. If the spent vessel is nontransuranic, the vessel will be stored at the Hanford Central Waste Complex for further treatment by the WRAP Facility. Waste minimization was achieved by minimizing the number of vessel changeouts.

The offgasses will be vented back through the underground tanks to maximize condensation (minimizing gaseous effluents and the amount of activated charcoal required for treatment) and treated by charcoal adsorption and filtration. The charcoal adsorbent becomes a mixed waste. Approximately 270 kilograms of charcoal (three or four 0.21-cubic meter drums) were used.

The waste remaining in the two original storage tanks will be handled and disposed of as part of the tank closure process.

As with the distillation phase, the incineration is itself a waste reduction effort because it will eliminate a dangerous waste (the incineration process will reduce the organic distillate to nondangerous carbon dioxide and water).

3.8.5 Waste Reduction

Treatment has reduced the volume of mixed waste from 136 cubic meters of hexone waste to less than 16 cubic meters of tar-filled vessels and 1 cubic meter of charcoal adsorbent. Additional reduction information is located in Section 3.8.4.

3.8.6 Variances, Exemptions, Time Extensions

Hexone is a low-level mixed waste that is restricted from land disposal because it contains solvent list (40 CFR 268.30) constituents. The Tri-Party

9 2 1 2 6 4 0 0 9 2 0

Agreement (Ecology et al. 1990) provides for continued storage of the hexone waste until treatment and disposal capacity for this waste is developed.

If additional variances, exemptions, or time extensions are required as a result of delays in the development of treatment, storage, or disposal capacity, they will be applied for in accordance with the procedures detailed in the Tri-Party Agreement.

3.9 183-H SOLAR BASIN WASTE

The 183-H Solar Basins are a series of four concrete basins located in the 100 H Area. The 183-H Solar Basins were constructed in 1949. Originally there were 16 flocculation and sedimentation basins that were a part of the 183-H Filter Plant. The filter plant provided water treatment, filtering units, and reservoir capacity for the 100 H Reactor process water system. In the spring of 1974, after decontamination, demolition of the 183-H Filter Plant was initiated. The 183-H head house, 12 of the flocculation and sedimentation basins, the filter building, and the clearwell pump room were demolished to ground level and the underground portions were backfilled to ground level. The remaining four basins were used from 1973 to 1985 to store and treat liquid chemical waste from 300 Area fuel fabrication plants. The purpose of the 183-H Solar Basins was to provide a means of waste reduction by natural solar evaporation.

The waste stored in the 183-H Solar Basins has undergone solar evaporation. The liquids have been treated by solidification; the waste precipitates and sludges have been removed, packaged in lined 0.21-cubic meter drums, and shipped to the Hanford Central Waste Complex for storage.

The 183-H Solar Basins have not received waste since November 1985. All basin wastes have been removed and are being stored at the Hanford Central Waste Complex for future processing at the WRAP Facility.

9 2 1 2 6 4 0 0 9 2 1

3.9.1 Generation

This section describes the waste generation process and identifies amounts of waste generated.

3.9.1.1 Process. The 183-H Solar Basins were a storage and treatment (evaporation) unit for the liquid chemical waste generated at the 300 Area nuclear fuel fabrication plants. The basins received waste from 1973 through 1985 (DOE-RL 1990a).

3.9.1.2 Generation. During the operating life of the 183-H Solar Basins a total of 9,623 cubic meters of routine waste was added to the basins. Table 3-11 presents the quantity of chemical constituents discharged to the basins.

In addition to the routine waste, nonroutine waste periodically was discharged into the 183-H Solar Basins. Nonroutine waste consisted of unused chemicals and spent solutions from miscellaneous processes, development tests, and laboratories. Nonroutine waste fell into three categories: listed waste,

nonlisted waste that was added directly to the 183-H Solar Basins, and nonlisted waste that was mixed with the routine waste stream before being transported to the 183-H Solar Basins. Only a small amount of listed nonroutine waste was discharged to the basins. The listed waste quantities were estimated to be 2 kilograms of solid materials and 9 liters of solution. Nonlisted, nonroutine waste discharged directly into the 183-H Solar Basins totaled approximately 50 kilograms of apparently dangerous solid materials, less than 5.8 cubic meters of apparently dangerous liquid waste, and 39 cubic meters of nondesignated waste. Internal 'chemical waste disposal permit' records indicate that about 44.30 cubic meters of liquid waste and 700 kilograms of solid waste was mixed with routine waste before being discharged into the 183-H Solar Basins (DOE-RL 1990a).

Since 1985, a total of 1,014 cubic meters of sludge and 105 cubic meters of crystalline material have been removed from the basins and sent to the Hanford Central Waste Complex, and about 8,300 cubic meters of liquid have been 'removed' through evaporation and solidification. This comprises all of the wastes that were in the basins.

9 2 1 2 6 4 0 0 9 2 2

3.9.2 Characterization

This section discusses the available waste characterization information. Information based on process knowledge and sample analyses is provided along with the waste designations and their bases, the uncertainty of the designations, and the schedule for further analysis.

3.9.2.1 Process Knowledge. The 183-H Solar Basins received both routine and nonroutine waste. The routine waste stream consisted of spent acid etch solutions (primarily nitric, sulfuric, hydrofluoric, and chromic acids) generated by the nuclear fuel fabrication process. Typically, these acidic solutions were neutralized with excess sodium hydroxide before being transported to the 183-H Solar Basins. Metal constituents in the waste included copper, silicon, zirconium, aluminum, chromium, manganese, nickel, and uranium. Following reaction with sodium hydroxide, these metals were present primarily in the form of precipitates. The resultant slurry of liquid and metal precipitates was transported and discharged into the 183-H Solar Basins.

Nonroutine waste also was discharged to the 183-H Solar Basins during its period of operation. Before each addition, a review was performed to determine whether undesirable chemical reactions would take place. A 'chemical waste disposal permit' system was developed for acceptance of waste into the 183-H Solar Basins. The permit system was for internal use only and should not be considered in the same context as a state or EPA permitted system. These internal chemical waste disposal permits have left a historical record which has been used to determine waste designations for the waste of the 183-H Solar Basins.

Nonroutine waste consisted of unused chemicals and spent solutions from miscellaneous processes, development tests, and laboratories. Nonroutine waste falls into three categories: listed waste, nonlisted waste that was

added directly to the 183-H Solar Basins, and nonlisted waste that was mixed with the routine waste stream before being transported to the 183-H Solar Basins.

The chemical waste disposal permits have shown that six different listed nonroutine wastes were discharged into the 183-H Solar Basins. Twelve chemical waste disposal permits were for the discharge of nonlisted, nonroutine waste directly into the 183-H Solar Basins. This waste included: sodium arsenate acid; ammonium phosphate; nickel oxide; mixed nickel, copper, and iron oxides; solutions of sodium nitrate, sodium sulfate (anhydrous), sodium chloride, and sodium carbonate (corrosive); sodium carbonate sludge; used boiler cleaning solution containing ethylene-diaminetetraacetic acid, ammonium persulfate, aqua ammonia, ethylenediamine, hydrazine, and thiourea.

A common practice for disposal of nonroutine waste was to mix the materials with the routine waste stream before the waste was transported to the 183-H Solar Basins. The chemical waste disposal permits indicate that about 44 cubic meters of liquid waste and 1,500 kilograms of solid waste were discharged to the 183-H Basins in this manner.

Additional information is contained in the 183-H Solar Basins Closure Plan (DOE-RL 1990a).

3.9.2.2 Sample Analyses. During the operating life of the 183-H Solar Basins, systematic chemical analyses were not performed for the routine waste discharges. In October 1984, the waste in Basin 1 was sampled. The waste contained three strata: a wet sludge, a liquid phase, and a relatively dry white stratum. In January 1986, the waste in Basin 2 was sampled. The waste consisted of a wet sludge and a liquid phase. During March 1987, the wet sludge and relatively dry crystalline strata in Basins 3 and 4 were sampled. At the same time, the consolidated liquid (from Basins 1, 2, 3, and 4) in Basin 2 was also sampled (DOE-RL 1990a).

The waste in the inner portion of Basin 1 consisted primarily of sludge intermixed with a residual liquid. The cleanout effort involved pumping as much liquid as possible into Basin 2; therefore, the results for the Basin 1 liquid are not discussed. The Basin 1 characterization was addressed by the analysis of the liquid in Basin 2. The outer basin waste was a relatively dry waste that was visibly different than the inner basin waste; consequently, samples taken from this stratum were analyzed separately. During removal of waste from Basin 1, no attempt was made to segregate the different stratum. As a consequence, the most conservative designation resulting from the separate analyses was assigned to all waste from Basin 1.

The results of inorganic chemical analyses for major constituents showed that the waste consisted largely of sodium sulfate, along with water held as moisture and as water of hydration. Nitrate and fluoride ions also were present in high concentrations. Copper constituted about 12% of the waste. The uranium concentration ranged from 390 to 530 ppm.

9 2 1 2 6 4 0 0 9 2 3

Before removing sludge from Basin 2, samples of the liquid and sludge phases were analyzed for chemical constituents. The major constituents in the sludge were copper (13%), sodium ion (9.7%), and nitrate ion (13.5%). Moisture content in the sludge averaged 53%. Uranium was present in the sludge in concentrations up to 2,500 ppm.

The solid waste in Basins 3 and 4 was sampled concurrently, and the analytical results are similar enough to be treated in a single discussion. There were two visibly distinct waste strata in each of the basins. These consisted of a moist sludge (inner basin) and a relatively dry, white, crystalline stratum (outer basin) near the walls. Samples of the two strata were analyzed separately and each basin was sampled separately.

The sludge stratum in both basins consisted primarily of sodium, nitrate, and copper ions. Moisture content in this stratum averaged greater than 40% in each basin. The crystalline stratum contained high average concentrations of sodium and sulfate ions. A major difference between the basins was that the nitrate ion concentration in the crystalline stratum in Basin 4 ranged from 7% to 70%, while in Basin 3 the levels were all less than 1%. The uranium concentration ranged from 7 to 1,560 picocuries per gram dry weight.

Volatile organic analysis was performed on 10 samples of wet sludge from Basins 3 and 4. The primary reason for doing this analysis was to determine if tetrachloroethane and 1,1,1-trichloromethane (two solvents routinely used in the nuclear fuels fabrication process) had reached the 183-H Solar Basins via carryover into the routine waste stream. The analysis showed that neither solvent was present in detectable concentrations; therefore, the solvents were assumed not to be present.

Five samples of the consolidated liquid in Basin 2 were taken. The major constituents found were sodium and nitrate ions (14% and 38%, respectively). Moisture content averaged 57%. Uranium content for the liquid averaged 82,400 picocuries per liter.

3.9.2.3 Waste Designation and Basis. The following are the bases for the waste designations:

- Pure chemical products identified on the internal chemical waste disposal permits
- Results of analyses conducted for characterizations of the waste for each basin.

The uranium content of the sludges and liquid is sufficient to classify them as low-level, nontransuranic radioactive waste.

Six listed wastes were discharged into the 183-H Solar Basins. Five of these materials were extremely hazardous waste. All the listed wastes were initially added to Basin 1. However, because of subsequent transfers of the liquids among the 183-H Solar Basins, all of the 183-H Solar Basins have been designated as having contained these listed materials. As a consequence, waste codes applicable to all basin waste are U123 (formic acid), P030 (soluble cyanide salts), P120 (vanadium pentoxide), P029 (copper cyanides), P106 (sodium cyanide), and P098 (potassium cyanide).

9212640092 4

Additional waste designations for waste of each of the 183-H Solar Basins are as follows:

- Basin 1 (solid): WT01 (fluoride ion concentration)
- Basin 2 (sludge): WT02 (fluoride ion concentration); D007 (TCLP chromium)
- Basin 3 and 4: WT01 - (fluoride ion concentration)
- Basin 2 (liquid): WT01 - (fluoride concentration); D007 (TCLP chromium).

3.9.2.4 Uncertainty of Waste Designation. The designations of the 183-H Solar Basin waste are considered accurate.

3.9.2.5 Schedule for Further Characterization. No further analyses are planned.

9 2 1 2 6 4 0 0 9 2 5

3.9.3 Storage

All solid and liquid wastes in the 183-H Solar Basins have been removed and are being stored in the Hanford Central Waste Complex; other wastes expected to be generated during closure, decontamination, and demolition also will be stored in the Hanford Central Waste Complex. Concrete rubble and contaminated soil are expected to be generated. Small concentrations of arsenic and lead have been found in the soil. The TCLP analysis now is being pursued. The soil would be regulated as a dangerous waste if the lead is all leachable.

It is DOE's intent to operate the Hanford Central Waste Complex in compliance with all applicable federal and state requirements related to mixed waste storage. Further details on this facility are provided in Chapter 3.0, Section 3.13. The storage unit compliance status of the Hanford Central Waste Complex is discussed in Chapter 3.0, Section 3.13.3.3.

3.9.4 Treatment

Treatment involved solidifying the liquids, packaging the solidified liquids and solid 183-H Solar Basin waste for temporary storage, and moving it to the Hanford Central Waste Complex.

All dangerous waste from the 183-H Solar Basins will be retrieved for processing in the Hanford Central Waste Complex's WRAP Facility, a multipurpose waste processing facility that is scheduled to start operation in 1996. The WRAP Facility is described in Chapter 3.0, Section 3.13.4.2.

3.9.5 Waste Reduction

The quantity of 183-H Solar Basin waste requiring disposal has been reduced by solar evaporation. To minimize the waste generated when solidifying the remaining saturated, unevaporated liquid, 13 different liquid waste solidification agents were studied for packaging efficiency. The solidifying agent chosen provided a high-packaging efficiency, allowing 0.15 cubic meter of liquid to be solidified and packaged into a 0.21-cubic meter drum.

3.9.6 Variances, Exemptions, Time Extensions

The 183-H Solar Basins will undergo closure in accordance with an approved closure plan (DOE-RL 1990a). The facility either will be clean closed or closed as a landfill. The choice of closure method currently is being evaluated. The dangerous waste and waste residues are placed in containers and transported to the Hanford Central Waste Complex for storage. This waste is managed with other waste stored at the Hanford Central Waste Complex.

The 183-H Solar Basins waste consists of low-level waste containing dangerous waste constituents. The 183-H Solar Basin waste is restricted from land disposal because it contains solvent waste (40 CFR 268.30) and California list waste (40 CFR 268.32). It also contains waste covered by the Third-Third Promulgation (55 FR 22520).

The Third-Third Promulgation provided for a 2-year national capacity variance from the land disposal restrictions for Third-Third mixed waste. This variance allows continued storage of these wastes. In the event that sufficient treatment capacity for this waste is not available at the expiration of this variance (August 1992), the Tri-Party Agreement (Ecology et al. 1990) will allow continued storage of this waste until sufficient treatment capacity is available in accordance with the schedules in the agreement.

The Tri-Party Agreement provides for continued storage of California list and solvent waste until treatment capacity is developed for these wastes.

The 183-H Solar Basins' closure waste will be stored at the Hanford Central Waste Complex until treatment by the WRAP Facility and subsequent disposal at appropriate disposal unit.

An additional variance also is required to allow alternative treatment of waste code U123 (formic acid), for which the required treatment is incineration or fuel substitution. Currently, there is no incineration capacity planned for mixed waste at the Hanford Site.

If additional variances, exemptions, or extensions of time are required as a result of delays in the development of treatment, storage, or disposal capacity, they will be applied for in accordance with the procedures detailed in the Tri-Party Agreement.

9 2 1 2 6 4 0 0 9 2 6

3.10 PUREX STORAGE TUNNEL #2 WASTE (Mercury)

This liquid low-level waste is contained in discarded dissolvers for irradiated fuel. The elemental mercury is sealed inside thermowells that are an integral part of the irradiated fuel dissolvers.

As of August 1991, 0.01 cubic meter of elemental mercury is stored in PUREX Storage Tunnel #2. The mercury is designated D009 (TCLP-mercury) and WT01 (toxic) (DOE-RL 1990b).

3.10.1 Generation

This section describes the waste generation process and identifies the volume generated.

3.10.1.1 Process. Elemental mercury waste is generated when dissolvers in the PUREX process fail or are deemed to be obsolete (hereafter referred to as being discarded). The mercury becomes a waste because its removal from the discarded dissolver is not practical.

The elemental mercury is sealed inside thermowells, which are an integral part of reactor fuel dissolvers used at the PUREX Plant. There are two thermowells per dissolver. Each thermowell consists of a 2.9-meter length of stainless steel pipe with an extension welded to the downside end. The lower end butts against the outer surface of the internal slotted bar screen that separates the undissolved fuel elements from the outer solution chamber of the annular dissolver. The mercury serves to transfer heat from the dissolver interior to the temperature sensor mounted within the thermowell. This mercury remains in the thermowells of discarded dissolvers. In preparation for storage, the thermowell is sealed with a stainless steel nozzle plug. In storage, the discarded dissolver rests in an inclined position in a cradle on a railcar. Secondary containment is provided by the dissolver vessel itself.

3.10.1.2 Generation. As of August 1991, three dissolvers have been discarded: one in 1971, a second in 1972, and a third in 1986. The first two dissolvers each contain 44 kilograms of elemental mercury, while the third one contains 38 kilograms. All three dissolvers are stored on railcars in PUREX Storage Tunnel #2 (DOE-RL 1990b).

If the PUREX Plant is selected as the preferred option for disposition of stored reactor fuel, estimates of future mercury waste generation will be developed during restart planning. However, during the PUREX Plant standby, elemental mercury waste may be generated.

3.10.2 Characterization

This section discusses the available waste characterization information. Information based on process knowledge and sample analyses is provided along with the waste designations and their bases, the uncertainty of the designations, and the schedule for further analysis.

9 2 1 2 6 4 0 0 9 2 7

3.10.2.1 Process Knowledge. Characterization of the mercury waste relies on fabrication and installation specifications. The quantity of mercury present in each dissolver is documented on the fabrication drawings. None of the mercury will evaporate because each thermowell is sealed.

3.10.2.2 Sample Analyses. Sampling and chemical analysis is not performed on mercury associated with the dissolvers. The need for sample analyses will be evaluated during planning for closure of the PUREX Plant including the PUREX Storage Tunnels.

3.10.2.3 Waste Designation and Basis. The basis for the designation of mercury waste is process knowledge, and the fabrication and installation specifications.

Elemental mercury exhibits the characteristic of toxicity as determined by the TCLP and is designated D009. The quantity of mercury present, if exposed to a leachate, could produce an extract greater than 20 milligrams per liter. This dictates that the mixed waste be managed as extremely hazardous waste and is further designated as toxic (WT01) (DOE-RL 1990b).

3.10.2.4 Uncertainty of Waste Designation. The designation of the PUREX Storage Tunnels mercury waste is considered accurate.

3.10.2.5 Schedule for Further Characterization. The need for additional waste characterization will be evaluated during planning for closing the PUREX Storage Tunnels.

3.10.3 Storage

This section discusses the PUREX Storage Tunnels, provides their storage capacity and the amount of waste stored, and assesses the compliance status of the storage unit.

3.10.3.1 Storage Unit and Capacity. The PUREX Storage Tunnels are a mixed waste storage unit. The two tunnels are connected by rail to the PUREX Plant and combine to provide storage space for 48 railroad cars (railcars). The PUREX Storage Tunnels provide long-term storage for process equipment removed from the PUREX Plant. Equipment transfers into the PUREX Storage Tunnels are made on an as-needed basis. Radioactively contaminated equipment is loaded on railcars and remotely transferred by rail into the PUREX Storage Tunnels. Railcars act as both a transport means and a storage platform for equipment placed into the tunnels.

The tunnels are weather-tight structures covered by 2.4 meters of earth. This design serves to protect the stored equipment from exposure to natural elements, provides external radiation shielding from the radioactive equipment stored inside the tunnels, and provides for the protection of the environment.

Tunnel #1 (218-E-14) was completed in 1956 as part of the PUREX Plant construction project and provides storage for eight railcars. Tunnel #1 was filled to capacity (approximately 600 cubic meters of waste) in 1965 and subsequently was sealed. There is no elemental mercury waste stored in Tunnel 1.

9 2 1 2 6 4 0 0 9 2 8

Tunnel #2 (218-E-15) was an expansion project constructed in 1964. This tunnel is different in design and is considerably longer than Tunnel #1, providing storage space for a total of 40 railcars. A more complete description of the PUREX Storage Tunnels may be found in *PUREX Storage Tunnels Dangerous Waste Permit Application*, Rev. 0 (DOE-RL 1990b).

PUREX Storage Tunnel #2 has a maximum storage capacity of 40 railcars. Each railcar will hold 77 cubic meters of waste. To date, 43% of the storage area is filled, as 17 railcars holding 1,360 cubic meters of discarded equipment and associated waste have been placed in the tunnel. Sufficient storage capacity exists for all future waste projected to be generated.

3.10.3.2 Amount In Storage. The amount of elemental mercury currently being stored in PUREX Storage Tunnel #2 is 0.01 cubic meter (130 kilograms).

Additional mercury waste may be placed into storage before closure of the PUREX Plant in the year 2000 if the PUREX Plant restarts. The amount of future mercury waste generation will be evaluated during any restart planning.

3.10.3.3 Storage Compliance Assessment. Elemental mercury waste is stored in PUREX Storage Tunnel #2, a mixed waste storage unit. The PUREX Storage Tunnels do not have secondary containment structures; however, the mercury waste stored is contained in the thermowells of the dissolver vessels, and the outer shell of the dissolver provides secondary containment. Personnel entry (to inspect the waste storage area) is not practical because of the high levels of radiation present inside the tunnel, which would not meet the requirements of the *Atomic Energy Act* to maintain radiation exposure as low as reasonably achievable. The PUREX Storage Tunnels Dangerous Waste Permit Application was submitted to Ecology in September 1990 in accordance with the Tri-Party Agreement (Ecology et al. 1990). No additional compliance actions have been identified for the PUREX Tunnels.

9 2 1 2 5 4 0 0 9 2 9

3.10.4 Treatment

Planned treatment of the elemental mercury waste stored in PUREX Tunnel #2 is detailed in the Part B Dangerous Waste permit application (DOE-RL 1990b). The EPA required treatment technology for elemental mercury is amalgamation (52 FR 22520). Therefore, the treatment of choice is the current approach of adding zinc powder to create an amalgam. An alternative treatment being considered is to mineralize the elemental mercury (creating elemental mercury sulfide). After treatment, waste still classified as mixed waste will be placed in approved transport packaging and stored in an authorized Hanford Site storage unit or sent to a permitted mixed waste disposal unit.

3.10.5 Waste Reduction

The elemental mercury in PUREX Storage Tunnel #2 will be separated from other waste categories to reduce the hazard of waste requiring processing and disposal as mixed waste.

3.10.6 Variances, Exemptions, Time Extensions

Elemental mercury waste was placed in the PUREX storage tunnels before November 1987 (the effective date of the land disposal restrictions for mixed waste) and, therefore, is not subject to land disposal restrictions until the waste is removed from the tunnels. Removal of elemental mercury waste is planned as part of the closure of the PUREX Plant. At that time waste will be removed from the PUREX storage tunnels, treated to comply with land disposal restriction treatment standards, and disposed of at a permitted disposal unit.

If variances, exemptions, or time extensions are required as a result of delays in the development of treatment, storage, or disposal capacity, they will be applied for in accordance with the procedures detailed in the Tri-Party Agreement (Ecology et al. 1990).

3.11 PUREX STORAGE TUNNELS #1 AND #2 WASTE (LEAD AND SILVER)

The PUREX Storage Tunnels #1 and #2 contain 0.26 cubic meter of elemental lead and PUREX Storage Tunnel #2 contains 0.17 cubic meter of silver (mostly as silver nitrate). The estimated volume of equipment associated with the elemental lead is 234 cubic meters. The estimated volume of equipment associated with the silver nitrate is 147 cubic meters (DOE-RL 1990b, Appendix A). The lead is in jumper counterweights and equipment shielding, and the silver is in discarded silver reactors.

The elemental lead waste is TCLP toxic for lead (D008) and also is designated WT01. The silver nitrate waste is classified as TCLP toxic for silver (D011) and ignitable (D001) because of the presence of nitrates.

3.11.1 Generation

This section describes the waste generation process and identifies the volume generated.

3.11.1.1 Process. Elemental lead waste is generated in the PUREX process as an integral part of equipment, such as process pipe jumpers, jumper alignment tools, and shielding equipment. Historically, elemental lead was used as weight, counterweight, and radiation shielding in the fabrication of process equipment used in the PUREX Plant; generally, the lead was encased in steel (carbon or stainless) to facilitate its attachment to process equipment. Counterweights are used to facilitate remote installation of in-cell process and service piping (jumpers). A jumper alignment tool may have contained as much as 680 kilograms of lead. This tool is used as a weight to pull down the free end of a jumper so the connecting parts align vertically and the connection can be made.

Silver in the form of silver salts deposited on unglazed ceramic packing is contained within the discarded silver reactors stored in Tunnel #2. Three silver reactors were used to remove radioactive iodine from the offgas streams of the irradiated reactor fuel dissolvers in the PUREX process. The silver reactor vessel contains two beds of packing. The packing is coated initially

9 2 1 2 6 4 0 0 9 3 0

with 114 kilograms of silver nitrate used for iodine retention. Nozzles on the top of the reactor are provided to allow flushing and/or regeneration of the packing with silver nitrate solution as the need arises.

Experience has shown that after extended use, the silver reactors lose efficiency. This loss in efficiency normally occurs when about one-half the silver nitrate on the packing has been converted to silver iodine. Other competing reactions such as reduction of silver nitrate to metallic silver and formation of silver chloride also occur and affect silver reactor efficiency. Therefore, regeneration of the silver reactor with fresh silver nitrate is performed periodically. Thus, the packing of the discarded silver reactor contains a mixture of silver nitrate, silver halides, and silver fines.

3.11.1.2 Generation. If the PUREX Plant should be selected as the preferred option for the disposition of stored reactor fuel, future lead and silver waste generation will be evaluated as part of restart planning. However, during PUREX standby, elemental lead and silver nitrate waste may be generated by plant maintenance activities.

9 2 1 2 6 4 0 0 9 3 1

3.11.2 Characterization

This section discusses the available waste characterization information. Information based on process knowledge and sample analyses is provided along with the waste designations and their bases, the uncertainty of the designations, and the schedule for further analysis.

3.11.2.1 Process Knowledge. The quantity of lead generated is determined from a review of fabrication and design drawings for each piece of equipment placed in storage if the leadweight, counterweight, or shielding is specifically detailed. The silver salts quantity is estimated from the knowledge of the amount of silver nitrate placed on the bedding and the regeneration history of the silver reactors. For accountability purposes, the total silver content is considered to be silver nitrate, the salt that exhibits the characteristics of both ignitability and TCLP toxicity.

3.11.2.2 Sample Analyses. Sampling and chemical analysis is not performed on lead or silver salts associated with the radioactive discarded equipment placed in the PUREX Storage Tunnels. The quantity of lead in storage is determined from process knowledge. Provisions for taking samples of the bedding were not provided in the design of the silver reactor vessels. Therefore, sampling and chemical analysis are not performed for silver salts before placing a silver reactor in storage.

3.11.2.3 Waste Designation and Basis. Elemental lead exhibits the characteristic of toxicity as determined by the TCLP and is designated D008. The form of lead present could produce an extract greater that 500 milligrams per liter should it be exposed to a leachate; therefore, the mixed waste is managed as extremely hazardous waste and is further designated as WT01. However, because the bulk of the lead is encased in steel on railcars that isolate the lead from other materials stored within the tunnel, the potential for exposure of lead to a leachate is considered to be negligible.

Silver salts exhibit the characteristics of toxicity as determined by the TCLP and are designated D011. The form of silver present could produce an extract having greater than 500 milligrams of silver per liter should the salts be exposed to a leachate; therefore, the mixed waste is managed as extremely hazardous waste and is further designated as WT01. In addition, nitrates exhibit the characteristic of ignitability and are designated D001.

3.11.2.4 Uncertainty of Waste Designation. The designated waste codes for the lead and silver waste are considered accurate.

3.11.2.5 Schedule for Further Characterization. The need for additional waste characterization will be evaluated during planning for closing the PUREX Storage Tunnels.

3.11.3 Storage

The PUREX Storage Tunnels, their storage capacity, and the compliance status of the storage unit are discussed in Chapter 3.0, Section 3.10.3.

As of August 1991, 0.26 cubic meter of elemental lead is stored in PUREX Storage Tunnels #1 and #2, and 0.17 cubic meter of silver nitrate is stored in Storage Tunnel #2. The estimated volume of equipment associated with the elemental lead is 234 cubic meters. The estimated volume of equipment associated with the silver nitrate is 147 cubic meters (DOE-RL 1990b).

The amounts of lead and silver placed in the storage tunnels are given in Table 3-12. The estimated quantity of lead listed in Table 3-12 accounts only for the lead in alignment tool and jumper counterweights. Counterweights on equipment dunnage and lead used for shielding cannot be quantified by existing historical records and are not included in the estimated quantity of lead in storage.

The quantity of silver salts listed in Table 3-12 are a function of time of reactor use, the regeneration history, and the impurities in the process chemicals that may have reacted with the silver nitrate. Sample analyses have not been conducted to verify the predicted quantities present.

3.11.4 Treatment

Planned treatment of the elemental lead and the silver salts associated with the process equipment stored in the storage tunnels is detailed in DOE-RL (1990b). The elemental lead will be removed, where feasible, from the process equipment to reduce the volume to be treated. The elemental lead, as well as the silver salts located in the silver reactors, are planned to be treated by encapsulating the material in a cementitious grout that immobilizes the lead and silver.

9 2 1 2 6 4 0 0 9 3 2

3.11.5 Waste Reduction

Since early 1987, the use of lead in the design and fabrication of new replacement equipment for the PUREX Plant has been discontinued wherever feasible.

The silver and elemental lead in the PUREX Storage Tunnels will be separated from other waste categories to reduce the hazard of waste requiring processing and disposal as mixed waste.

3.11.6 Variances, Exemptions, Time Extensions

Elemental lead waste, silver nitrates, silver salts, and silver fines (low-level mixed waste) were placed in the PUREX storage tunnels before November 1987 and are, therefore, not subject to land disposal restrictions until the waste is removed from the tunnels. Removal of elemental lead waste and silver nitrates, silver fines, and silver salts is planned as part of the PUREX Plant closure. At that time waste will be removed from the PUREX Storage Tunnels, treated to comply with land disposal restriction treatment standards, and disposed of at a RCRA-compliant disposal facility.

If variances, exemptions, or time extensions are required as a result of delays in the development of treatment, storage, or disposal capacity, they will be applied for in accordance with the procedures detailed in the Tri-Party Agreement (Ecology et al. 1990).

3.12 PUREX CANYON WASTE PILE (LEAD)

Discarded process equipment removed from service in the PUREX Plant and known to have shielding, weights, and/or counterweights containing elemental lead are stored up to 5 years in a waste pile located on the canyon deck of the PUREX Building.

Segregation of lead into a waste pile began in December 1987. The current inventory (as of August 1991) is approximately 0.25 cubic meter (approximately 2,820 kilograms) of radioactively contaminated lead (mixed waste). The lead stored in the PUREX Canyon Waste Pile currently is untreated. The preferred disposal option is microencapsulation.

3.12.1 Generation

This section discusses the waste generation process.

3.12.1.1 Process. The PUREX Plant is located in the 200 East Area of the Hanford Site. It processes irradiated nuclear fuel by separating usable actinides from fission products. The PUREX Plant was constructed in 1955 and has operated intermittently as needed since then.

The lead in the PUREX Canyon Waste Pile consists of material that had been used for shielding, weights, or counterweights in the PUREX Plant. In most cases, the lead is totally enclosed in steel. However, some of the lead

sheeting used in shielding is unclad. Since early 1987, the use of lead in the design and fabrication of new or replacement equipment for the PUREX Plant has been discontinued wherever feasible.

Specific equipment items that use protective radiation shielding include certain diaphragm-operated valves and neutron monitors used for process control. The amount of lead required for such purposes varies from about 91 kilograms for the shielding around a small diaphragm-operated valve to as much as 1,400 kilograms of lead for a single neutron monitor.

Massive lead weights, up to 680 kilograms, are used as jumper alignment tools in the remote installation of some jumpers. Such tools assist in the vertical alignment so connection can be made. Jumpers are rigid lengths of pipe used to connect lines providing solution transfer to and from process equipment. Counterweights are attached to some of the jumpers to provide proper balancing for remote installation by the overhead maintenance cranes. A typical jumper counterweight consists of appropriately sized steel pipe filled with lead shot (approximately 45 kilograms) and welded shut on both ends.

3.12.1.2 Generation. If the PUREX Plant is selected as the preferred option for the disposition of stored reactor fuel, lead and silver waste generation will be evaluated as part of restart planning. Lead waste may be generated during standby of the PUREX Plant, but data are not available to estimate this generation rate.

3.12.2 Characterization

This section discusses the waste characterization and the basis for the waste characterization. The waste designation, the uncertainty of the designation, and the schedule for further characterization also are provided.

3.12.2.1 Process Knowledge. The waste comes from discarded radioactive process equipment with lead shielding, weights, or counterweights. The waste is characterized as lead based on knowledge of the amount and material used to manufacture a specific equipment component as determined from review of the fabrication and design drawings for each piece of discarded equipment.

3.12.2.2 Sample Analyses. No chemical analysis of the waste has been performed and is not required because the waste is accurately characterized based on process knowledge.

3.12.2.3 Waste Designation and Basis. The waste (elemental lead) is designated TCLP toxic for lead (D008) and toxic (WT01). The material is a solid, noncombustible metal.

3.12.2.4 Uncertainty of Waste Designation. The waste designation is accurately known, based on process knowledge.

3.12.2.5 Schedule for Further Characterization. No further characterization of this waste is scheduled.

9 2 1 2 6 4 0 0 9 3 4

3.12.3 Storage

This section describes the storage unit and assesses its compliance status.

3.12.3.1 Description of Storage Unit and Capacity. The PUREX canyon is a portion of the plant with a thick concrete floor, walls, and ceiling (up to 1.8 meters thick). Work in the canyon is generally performed remotely due to high radiation levels.

Discarded process equipment with lead attachments are stored on the south side of the canyon. Periodically, lead-containing components are cut from the equipment and either returned to the waste pile or placed in a metal box suitable for transfer by railcar into the PUREX Storage Tunnels. The remaining nonlead-containing equipment is segregated from the lead waste pile and disposed of as low-level waste.

Because the waste pile is located inside the building, the waste pile is protected from external environmental forces such as wind, rain, and run-on flooding. A system of drains and sumps ensures that any liquids from the waste pile are routed to appropriate waste storage tanks.

All lead components accumulated over successive 5-year periods will be transferred to an approved mixed waste storage container(s). These containers will be transferred to the PUREX Storage Tunnels or other approved storage unit.

3.12.3.2 Amount in Storage. The quantity of lead waste in storage is 0.25 cubic meter (2,820 kilograms). About 70 kilograms were added since October 1, 1990.

3.12.3.3 Storage Compliance Assessment. The PUREX Canyon Waste Pile is located on the canyon deck of the building. The waste pile is addressed in the Part A permit application for the PUREX Plant. The PUREX Plant waste management unit was reviewed for compliance with interim status dangerous waste regulations in accordance with Tri-Party Agreement (Ecology et al. 1990) Milestone M-21-00. No interim status compliance deficiencies were noted.

A Part B permit application for the PUREX Canyon Waste Pile will be submitted in September 1992 addressing compliance with final status regulations.

3.12.4 Treatment

Although treatment units could be built to separate the contained lead from its encasement and possibly refine the lead to remove radioactive contamination, it is doubtful if unrestricted release of the refined lead could be achieved. Therefore, the preferred treatment alternative currently is identified as microencapsulation (52 FR 22520).

9 2 1 2 6 4 0 0 9 3 5

3.12.5 Waste Reduction

Since early 1987, the use of lead counterweights in the design and fabrication of new or replacement equipment for use in the PUREX Plant has been discontinued wherever feasible. Nondangerous materials such as carbon or stainless steel are substituted for lead wherever practical.

3.12.6 Variances, Exemptions, Time Extensions

The PUREX Canyon Waste Pile waste is a low-level mixed waste restricted from land disposal by the Third-Third Promulgation (55 FR 22520). The Promulgation provided a 2-year national capacity variance from the Land Disposal Restriction for mixed waste. If sufficient treatment capacity for this waste is not available at the expiration of this variance (August 1992), the Tri-Party Agreement (Ecology et al. 1990) will allow continued storage of this waste until treatment and disposal capacity is available.

Removal of the PUREX Canyon Waste Pile is planned as part of the PUREX Plant closure. At that time, waste will be removed from the PUREX Canyon Waste Pile, treated to comply with land disposal restriction treatment standards, and disposed of at a permitted disposal facility.

If variances, exemptions, or time extensions are required as a result of delays in the development of treatment, storage, or disposal capacity, they will be applied for in accordance with the procedures detailed in the Tri-Party Agreement.

3.13 HANFORD CENTRAL WASTE COMPLEX STORED LOW-LEVEL, TRANSURANIC, AND POLYCHLORINATED BIPHENYL WASTE

The Hanford Central Waste Complex receives radioactive solid waste and provides temporary storage until treatment at the Hanford Site.

Waste is received at the Hanford Central Waste Complex from all radioactive waste generators at the Hanford Site and any offsite generators that are authorized by the DOE to ship waste to the Hanford Site for treatment and disposal. The waste received at the Hanford Central Waste Complex is generated by ongoing Site operations (e.g., PFP operation, waste management) and research and development activities conducted at the Site (e.g., SST waste sampling and analysis). Offsite waste has been primarily from DOE research facilities and other DOE sites. The characteristics of the waste received at the Hanford Central Waste Complex vary greatly from waste that is nondangerous low-level waste to transuranic dangerous waste. The Hanford Central Waste Complex currently stores, as of December 30, 1990, approximately 1,969 cubic meters of low-level mixed waste subject to land disposal restrictions and 108 cubic meters of transuranic mixed waste subject to land disposal restrictions. Other dangerous waste that is not restricted from land disposal is stored at the Hanford Central Waste Complex and is not included in these figures.

No treatment units currently exist for transuranic or low-level waste contaminated with PCBs. Therefore, this waste is being held in storage at the

9 2 1 2 6 4 0 0 9 3 6

Hanford Central Waste Complex until treatment capability exists. The Hanford Site PCBs inventory includes contaminated liquids (PCB-contaminated hydraulic fluid), contaminated combustible solids, and contaminated equipment (transformers, capacitors, and fluorescent light ballasts). There currently are 87 cubic meters of PCB-contaminated low-level waste and 111 cubic meters of PCB-contaminated transuranic waste.

3.13.1 Generation

This section describes the generation of radioactive mixed waste and radioactive PCB waste shipped to the Hanford Central Waste Complex.

3.13.1.1 Mixed Waste Generation. The majority of the waste shipped to the Hanford Central Waste Complex is generated in small quantities by routine plant operation and maintenance activities. Specifying generation rates and types of waste generated by each plant is difficult because this waste is not generated as a direct result of process operations. The overall volumes of mixed waste projected to be generated are given in Table 3-19. No data are available on the fraction of this waste that will be subject to land disposal restrictions, but the majority of this newly generated mixed waste probably will be subject to the land disposal restrictions. The dangerous waste designation of each container of waste is determined at its point of generation based on knowledge of the waste placed in the container. The major plants that generate mixed waste that is land disposal restricted and the general type of waste they generate are discussed below.

In the past the PUREX Plant, located in the 200 East Area, was used to process irradiated nuclear fuel from N Reactor. The PUREX process uses a nitric acid solution to dissolve the fuel and a solvent extraction process to separate the various fission products from the uranium, plutonium, and neptunium product streams. Radioactive solid waste is generated in all parts of the PUREX Plant from routine laboratory operations to equipment maintenance. Typically, the mixed solid waste generated at the PUREX plant includes lead shielding, decontamination solvents, mercury-filled light tubes, and other nonroutinely generated radioactive solid waste.

The PFP, located in the 200 West Area, has been used to process plutonium nitrate solutions from the PUREX Plant, plutonium oxide, and plutonium scrap into metal. The plant consists of several facilities including the Plutonium Reclamation Facility, the Remote Mechanical 'C' Line, and the Product Handling Facility. Several radioactive mixed waste streams including lead, PCBs, and laboratory wastes are routinely generated at the PFP and shipped to the Hanford Central Waste Complex.

The Uranium Oxide Plant, located in the 200 West Area, converts uranyl nitrate solution generated from the reprocessing of N Reactor fuel to uranium oxide solids which are shipped offsite for reuse. The primary source of mixed waste at the Uranium Oxide Plant is solvents and mineral acids (HNO_3 and H_2SO_4) used for decontamination or equipment maintenance in radiation areas. Other sources of land disposal restricted mixed waste at the Uranium Oxide Plant include contaminated fluorescent tubes and failed equipment.

9 2 1 2 6 4 0 0 9 3 7

The 222-S laboratories, located in the 200 West Area, are used to analyze radioactive samples in support of waste management operations and tank characterization. These operations generate both solid and liquid mixed low-level waste. The solid waste generated by this laboratory includes the following:

- Radioactively contaminated lead
- Outdated chemicals and reagents
- Equipment and absorbent materials contaminated with radioactive waste.

The liquid low-level mixed waste is generated when using organic solvents to analyze radioisotopes.

B Plant, located in the 200 East Area, until recently was being prepared to pretreat waste that is going to be vitrified. Current plans are to use a facility to be determined by a study expected to be completed in December 1991. Maintenance activities generate small quantities of solid waste such as lead shielding, equipment decontamination agents, paint and painting supplies, and fluorescent light ballasts. This contact handled and remote handled waste is generated on an as-needed basis because of plant maintenance and upgrading.

T Plant, located in the 200 West Area, is used to decontaminate failed equipment to facilitate repair, reuse, or disposal as nondangerous low-level waste. The solid waste generated as a result of these operations includes spent solvents, failed equipment, lead shielding, paint and painting supplies, and metallic vapor lights.

N Reactor, located in the 100 N Area, is shut down in deactivated status. There are numerous sources of mixed low-level waste in the 100 N Area that generate waste oils, solvents, and decontamination solutions that in the past have been determined to be dangerous waste. In addition, the 100 H Area is the location of the 183-H Solar Basins (Chapter 3.0, Section 3.9), which are the source of a large quantity of waste (approximately 460 cubic meters).

The 300 Area Fuels Manufacturing Operations generates several mixed low-level waste streams. These operations have been shut down since December 1986, and the only waste generated from these operations is from decontaminating and closing these operations. A detailed description of the waste is provided in Chapter 3.0, Section 3.16. The waste is being transferred to the Hanford Central Waste Complex, or offsite if determined nonradioactive, as part of the closure activities for the 303-K Facility.

The FFTF, in the 400 Area, and associated research and development activities generate several waste streams that are low-level mixed waste. This waste includes waste sodium, which is discussed in Chapter 3.0, Section 3.5, spent ethyl alcohol waste, listed solvent residual waste, contaminated lead residual waste, and decontamination waste. Spent ethyl alcohol waste is generated by cleaning of Materials Open Test Assembly specimens to remove residual sodium. This waste exhibits the characteristic of ignitability (D001) and corrosivity (D002). Listed solvent residual waste

9212640938

is generated by the use of listed solvents in plant maintenance activities, such as manipulator repair and painting. Contaminated lead residual waste is generated from the removal of lead shielding for repair and replacement. Decontamination waste is generated while decontaminating stainless steel components such as shipping casks, hot cells, or other equipment in the conduct of Fuels Material Examination Facility operations. The waste contains listed solvents and may contain sufficient concentrations of chromium, nickel, and silver to be designated TCLP toxic.

The research and development activities conducted by PNL in the 300 and 3000 Areas generate numerous small-volume mixed waste streams that are land disposal restricted. This waste is generated in the 303-C, 320, 324, 325, 326, 327, 331, and 3720 Buildings. The laboratory waste may contain materials that are designated TCLP toxic (D003-D011) or that are designated as ignitable (D001) or corrosive (D002). The waste designated as TCLP toxic is generated from the analysis of samples containing toxic metals and the disposal of contaminated equipment and lead shielding. The waste designated as corrosive or ignitable is generated by the use of scintillation cocktails containing ignitable solvents for the analysis of radionuclides.

The operation and maintenance of the single- and double-shell waste storage tank farms located in the 200 East and 200 West Areas generates several types of mixed waste. The waste includes equipment used for tank sampling and characterization, failed equipment and instrumentation, and small quantities of tank waste absorbed on clothing or rags. These waste streams may be designated by some or all of the waste codes applicable to DSTs. These codes include corrosivity (D002); TCLP toxicity for arsenic (D004), barium (D005), cadmium (D006), chromium (D007), lead (D008), mercury (D009), selenium (D010), and silver (D011); spent halogenated solvents (F001); spent nonhalogenated solvents (F003); and toxicity (WT01).

3.13.1.2 Polychlorinated Biphenyl Waste Generation. The PCB-contaminated transuranic and low-level waste is generated by maintenance and periodic flushing of PCB hydraulic systems, failure of transformers and capacitors, and removal of PCB ballasts from light fixtures located in radioactive contaminated areas. The waste is packaged and shipped as solid waste to the Hanford Central Waste Complex for storage.

The best available generation information is maintained in the computerized Richland Solid Waste Information Management System database. The Richland Solid Waste Information Management System contains only information provided by the waste generator. In the past, exhaustive waste descriptions that could be used to accurately classify a waste were not required, and data entries such as "contaminated debris" and "mixed fission products" were common. Data from the Richland Solid Waste Information Management System indicates that 87 cubic meters of PCB-contaminated low-level waste and 111 cubic meters of PCB-contaminated transuranic waste were generated between 1970 and June 1990.

Future generation of PCB-contaminated waste is expected to be variable. The generation of this waste stream is correlated with the failure rate of PCB transformers, capacitors, and fluorescent light ballasts. Additional

9 2 1 2 6 4 0 0 9 3 9

generation may be related to general Hanford Site cleanup and decontamination/decommissioning activities. Sitewide cleanup efforts may identify soil-contaminated areas that will require cleanup and packaging.

3.13.2 Waste Characterization

This section discusses waste characterization based on process knowledge and sample analysis, identifies known designations, and addresses any further characterization required or planned.

Before acceptance of any waste at the Hanford Central Waste Complex, it is characterized and packaged as described in *Hanford Site Radioactive Solid Waste Acceptance Criteria* (WHC 1990i). These criteria require that the generator of the waste characterize each individual container of waste with sufficient accuracy to permit proper segregation, treatment, certification, shipment, and storage.

3.13.2.1 Process Knowledge. The waste characteristics are determined by the waste generator based on documented knowledge of the process generating the waste or sampling, as appropriate. The generators of all waste shipped to the Hanford Central Waste Complex are periodically audited to ensure that waste is being managed in accordance with *Hanford Site Radioactive Solid Waste Acceptance Criteria*.

Process knowledge has been used to characterize PCB-contaminated transuranic and low-level waste currently in storage. Equipment containing PCBs such as hydraulic systems, transformers, capacitors, and fluorescent light ballasts have been identified clearly. These systems are managed in accordance with 40 CFR 761 and waste are immediately handled and packaged as PCB transuranic or low-level waste material.

3.13.2.2 Sample Analyses. The waste characteristics are determined by the waste generator based on documented knowledge of sample analyses of the generated waste. The generators of all waste shipped to the Hanford Central Waste Complex are audited periodically to ensure that waste is being properly characterized.

Hydraulic systems and transformers have been sampled to determine PCB concentrations. Any waste resulting from the management of these systems is designated based on the concentration of PCBs in the source system. Light ballasts are designated based on data from the manufacturers.

Additional sampling is planned when this waste is processed through the WRAP Facility.

3.13.2.3 Waste Designation and Basis. Waste at the Hanford Central Waste Complex is designated based on the information provided by the generator, performed by the waste analysis organization as part of a waste acceptance evaluation in accordance with the *Hanford Site Radioactive Solid Waste Acceptance Criteria* (WHC 1990i), and recorded in the Richland Solid Waste Information Management System database. This database includes Washington State and RCRA waste codes resulting from designations based on process knowledge and sample analysis. Waste codes have been entered into the

database since 1988. When the waste codes were not found on the Richland Solid Waste Information Management System report, waste designation tables were used to assign codes to containers placed in storage before 1988. Table 3-14 summarizes the volume and designation of the low-level mixed waste listed on the Richland Solid Waste Information Management System in the Hanford Central Waste Complex. Table 3-15 summarizes the volume and designation of transuranic mixed waste listed on the Richland Solid Waste Information Management System in the Hanford Central Waste Complex. A new database, the Solid Waste Information Tracking System, is planned for use starting in November 1991.

3.13.2.4 Uncertainty of Waste Designation. The designation of the waste stored in the Hanford Central Waste Complex is considered accurate.

3.13.2.5 Schedule for Further Characterization. No further characterization is required to accurately designate the present waste for storage. For some of the waste, additional characterization will need to be performed to determine proper treatment and disposal options. This characterization will be performed during processing at the WRAP Facility. Further characterization may be necessary for newly generated waste and/or as a result of changed regulations.

3.13.3 Storage

This section describes the storage units associated with the Hanford Central Waste Complex and details the amount and characterization of the waste stored in these units.

3.13.3.1 Description of Storage Units and Capacity. The storage units described below are included in the Hanford Central Waste Complex.

- Flammable Mixed-Waste Storage Modules--Eight modules are operational to store flammable low-level waste, transuranic waste, low-level mixed waste, and transuranic-mixed waste with flashpoints below 38 °C. The total capacity is 246 0.21-cubic meter drums. The modules are small preengineered buildings with 16.3 square meters of floor space each.

- Mixed-Waste Storage Buildings--Thirteen mixed-waste-storage buildings are operational to store all categories of mixed waste (including transuranic). The floor space of each building is 372 square meters. Each will have a 1,000-drum equivalent capacity with the exception of 2402-WG, which is planned for a 550-drum capacity for low flashpoint low-level waste.

- Large Mixed-Waste Storage Facility--The large mixed-waste storage facility will be operational in five phases, from third quarter FY 1991 for Phase I through fourth quarter FY 1994 for Phase V. The large mixed-waste storage unit will store all categories of low-level mixed waste with an 11,000-drum capacity each for the Phases I, III, and IV buildings; 18,000 drums for Phase II; and 27,000-drum equivalents (both drum and box waste) for Phase V.

9 2 1 2 6 4 0 0 9 4 1

- Waste Unloading and Staging Area--This pad is 9,000 square feet in area and can hold approximately 2,500 drums stacked two high. This pad is not intended for long-term storage.

- Mixed-Waste Storage Pad--The mixed-waste storage pad is located adjacent to the radioactive mixed waste storage buildings and is used as interim storage area.

A plan view of the Hanford Central Waste Complex units is shown in Figure 3-17.

The planned capacity of the Hanford Central Waste Complex to store low-level waste and transuranic mixed waste is 14,450 cubic meters. This capacity is adequate to store the current projected volumes of mixed waste to be generated through the year 1996, assuming no treatment of the stored waste. Current plans call for treatment of the mixed waste to begin in 1999, which will reduce the amount of waste in storage and make storage room available for newly generated mixed waste. The capacity of the Hanford Central Waste Complex to store mixed waste is continually evaluated and additional storage buildings will be constructed if necessary to meet forecast capacity shortfalls.

3.13.3.2 Amount in Storage. The amount and classification of dangerous waste restricted from land disposal currently in storage at the Hanford Central Waste Complex as of December 1990 is shown in Tables 3-14 and 3-15.

As of December 1990, 111 cubic meters of PCB transuranic waste has been placed in the Hanford Central Waste Complex for storage. Existing storage capacity is judged to be adequate for any future generation.

As of December 1990, 87 cubic meters of PCB low-level waste has been placed in the 2401-W Building for storage. Existing storage capacity is judged to be adequate for any future generation.

3.13.3.3 Storage Compliance Assessment. The Hanford Central Waste Complex was reviewed for compliance with interim-status dangerous waste regulations during 1988.

The compliance assessment noted a specific area of noncompliance, the contingency plan. Compliance action schedules are being developed as part of the Tri-Party Agreement (Ecology et al. 1990). Interim status compliance was achieved in June 1990.

The Part B permit application documenting compliance with all final status dangerous waste regulations is scheduled to be submitted in October 1991 (Ecology et al. 1990).

3.13.4 Treatment

This section describes the treatment of the mixed waste currently stored in the Hanford Central Waste Complex.

3.13.4.1 Description of Current Treatment. The waste in the Hanford Central Waste Complex currently is not undergoing any treatment but is in storage pending the construction and operation of the WRAP Facility. The PCB, transuranic, and low-level waste is being stored until an approved processing facility is available.

3.13.4.2 Description of Proposed Treatment. The waste currently stored in the Hanford Central Waste Complex, potentially excepting PCB waste, will be treated at the WRAP Facility. The WRAP Facility will be constructed as two modules, with Module 1 operational in 1996* and Module 2 operational in 1999. Module 1 will provide examination, certification, and shipping for boxes and drums of contact-handled low-level and transuranic waste, but only drums would be opened and processed. It also will provide for decontamination of small items, primarily for decontamination of drums and overpacks. Most low-level radioactive mixed waste will be characterized and repackaged pending processing in Module 2.

Module 2 will contain size reduction, remote handling, mixed waste treatment, and decontamination processes. All retrieved and newly generated low-level mixed waste and secondary solids from the Effluent Treatment Facility will be processed. Low-level mixed waste and effluent treatment unit secondary solids will be characterized, treated, solidified, and repackaged. Low-level liquid organic waste will be characterized, repackaged, and transported offsite for incineration. All nonorganic low-level radioactive mixed waste will be treated and certified for disposal in accordance with all regulations, including the land disposal restrictions. A major difference between Modules 1 and 2 is that Module 2 can handle remote-handled wastes.

The WRAP Facility will provide the capability to process retrieved suspect transuranic waste, certify newly generated transuranic waste and low-level waste for disposal, process large and heavy items, and process radioactive mixed waste for permanent disposal. These capabilities will be in accordance with land disposal restrictions and Hanford Site disposal criteria for low-level waste and in accordance with WIPP waste acceptance criteria and TRUPACT 2 (transuranic package transporter) transportation criteria for transuranic waste. An engineering study for the WRAP Facility Module 2 examined the mixed waste streams that would feed the WRAP Facility, examined potentially applicable treatment processes, and evaluated five alternative processing configurations. Following is a discussion of the treatment process that will be included in the WRAP Facility for mixed waste.

A basic schematic showing potential radioactive mixed waste streams with corresponding treatment processes is found in Figure 3-19. Major unit processes include the use of an offsite incinerator for organics and animal waste; solidification for sludge waste and ion exchange resins; supercompaction for dry active waste; metals treatment including thermal oxidation, mineralization, and refining; and miscellaneous processes such as drum handling and treatment of decontamination solutions.

---

*Pending a Tri-Party Agreement change request submittal, this date may change to 1997.

9212640943

When retrieved drums enter the WRAP Facility Module 1, they will be sent to the Open/Sort Compaction enclosure. The Open/Sort Compaction operators will enter descriptive information on waste materials into the computer database and bar code labels will be applied to all drums exiting the Open/Sort Compaction enclosure. The transuranic and low-level waste drums will be opened in separate enclosures, but the opening and sorting process will be similar. After entering the enclosure, each drum will be deheaded and tipped onto a vibrating sorting table, and the inner plastic liner opened. All sorting will be performed manually through gloveports with extension tools.

For drums that have been identified as containing potentially noncompliant items based on real-time radiography examination, those items will be removed, placed on a transfer cart, and transferred to Special Processing. Examples of noncompliant items include free or containerized liquids, high-efficiency particulate air (HEPA) filters, and large quantities of particulates, aerosol cans, and suspect radioactive mixed waste. The vibrating table will have a liquid collection tank beneath for liquids that flow freely from the opened waste. Collected liquids will be transferred to Special Processing.

In the Special Processing enclosure, several operations will be carried out by operators through gloveports with the aid of extension tools. Any materials suspected of containing dangerous constituents will be sampled, and the samples will be transferred to the Sample Management area for transfer to Hanford Site laboratories for characterization. Treatment and disposal methods will be determined on a case-by-case basis for materials identified as mixed waste. The process enclosure in Module 1 primarily will be for characterization of any identified mixed waste and not for treatment. Mixed waste will be packaged and sent to be processed in Module 2.

The Special Processing operators will enter descriptive information on waste materials into the computer database, bar code labels will be applied to all drums exiting the Special Processing area, and the drums will be routed back to nondestructive assay. Special Processing will include operations for the following:

- Mixed waste sampling
- Immobilization of particulates
- Absorption of liquids
- HEPA filter immobilization
- Pyrophoric material
- Aerosol cans
- Lead waste segregation.

The WRAP Facility Module 2 will contain the mixed waste treatment processes, which will provide for all necessary treatment of low-level mixed waste. Waste received will include sludges, ion exchange resins, metallic

9 2 1 2 6 4 0 0 9 4 4

waste, organic waste, and dry active waste. All newly generated waste containers will be accompanied by paperwork attesting to the physical, chemical, and radiological contents. Each container retrieved from storage will be accompanied by weight, dose rate, and smear survey data obtained during retrieval. Little or no other documentation may be available on these containers.

Waste requiring pretreatment is broadly categorized as dry solids, sludge, slurry, or ion-exchange resins. Incoming containers of dry solids will be batch fed through a crusher, which will reduce solids to less than 5 centimeters in size. The other wastes will be dumped from their containers or sluiced from bulk tanks into either the resin tank, sludge tank, or slurry tank. Each of these tanks will be equipped with a heavy-duty mixer to mix the contents of the tanks into a homogeneous mixture. After mixing, the resin will be pumped directly to a solidification tank, the slurry will be pumped to a chemical conditioning tank for further treatment, and the sludge either will be pumped directly to a solidification tank or to a chemical conditioning tank for further pretreatment. Chemical conditioning could include pH adjustment, precipitation, or other chemical processes necessary to optimize subsequent solidification.

Four 4.3-cubic meter solidification mix tanks will be included in the Mixed Waste Treatment unit to solidify all sludges, slurries, and ion exchange resins. Based on typical waste-to-cement ratios, each 4.3-cubic meter batch will contain approximately 50% waste and 50% additives. After mixing is complete, each tank batch will be discharged into approximately twenty 0.21-cubic meter drums. Filled drums will be removed from the filling station by forklift to a drum-curing and inspection area. Curing will require 24 to 48 hours. After curing, the drums will be closed, labeled, and prepared for final shipment for disposal.

All containers that do not contain sludges or ion exchange resins will be moved from the receiving area by fork truck to the repackaging area. Organic and animal waste will be repackaged for shipment to the Idaho National Engineering Laboratory for incineration. Organic liquids will be pumped or poured from their containers and loaded into shipping containers. Absorbed organic waste and animal waste will be loaded manually into shipping containers.

The types of metals to be treated in the Metals Treatment area include zirconium and zirconium/beryllium shavings and fines, beryllium powder, mercury metal, lead, and other miscellaneous metals. The processes used to treat these metals include thermal oxidation, mercury mineralization, lead refining, and solidification. Zirconium and zirconium/beryllium containers will be opened and dumped into a 1-cubic meter decant tank. The solid fraction will settle to the bottom of the tank and the liquid will be drawn off and transferred to liquid treatment.

The solid fraction will be removed from the bottom of the decant tank in approximately 23-kilogram batches for transfer to the thermal oxidizer, which is similar to a small, open-hearth incinerator. The thermal oxidizer unit will be fired with fuel oil and excess air to oxidize the metals to a stable form. The ash will be collected from the combustion chamber and baghouse filter for transport to the solidification process.

9 2 1 2 6 4 0 9 4 5

Mercury will be converted to mercuric sulfide to reduce its toxicity. The process will react mercury with a sulfide compound such as hydrogen sulfide or sulfur dioxide in a 1-cubic meter stirred reaction tank.

The solidification system will be used to stabilize oxidized zirconium ash, mineralized mercury, and dross from lead refining. The metals will be added to a 1.3-cubic meter mix tank along with appropriate amounts of water and solidification chemicals. The waste/cement mixture will be loaded into drums for final disposal.

Miscellaneous solid metals will be encapsulated in cement. The metals will be placed in a drum or container with precast concrete walls approximately 5 to 8 centimeters thick. A grout mixture will be prepared in a 0.5-cubic meter mix tank and poured into the drum cavity, thereby completely encapsulating the solid metals.

The proposed treatment for PCB transuranic and low-level mixed waste is destruction by incineration. There is no offsite facility operating with approval for PCB treatment and disposal that can accept PCB mixed waste from the Hanford Site. Therefore, Westinghouse Hanford completed a study to define the regulatory requirements and identify and evaluate PCB destruction and disposal options within the DOE complex. The conclusions of the study follow.

- The most restrictive PCB destruction requirements will apply to the containers and tanks of liquid waste known to have PCB concentrations equal to or greater than 500 ppm.

- The following high-temperature thermal processes are the only commercially available technologies that can treat all the Hanford Site's PCB/radioactively contaminated waste to meet the *Toxic Substances Control Act* (TSCA) requirements:

  - Rotary kiln incineration

  - Plasma arc furnace.

- To treat all of the PCB waste at the Hanford Site by a method other than the above mentioned high-temperature thermal processes, it is probable that several technologies will have to be implemented to achieve compliance with the TSCA requirements. This is because of the great variability in waste form and composition as well as the treatment/disposal technologies. From a processing and environmental permitting perspective, it is preferable to treat all waste in a single system.

- The waste is not sufficiently characterized to allow all possible treatment and disposal requirements to be determined. In particular it is not known how much of the PCB/radioactively contaminated waste also meets the definition of RCRA hazardous waste. Such wastes would then have to be treated and disposed in accordance with the RCRA regulations as well as the TSCA regulations; not all the technologies evaluated in this study could meet the RCRA treatment criteria.

9212640094 6

The recommendations from the study are below.

- Conduct a cost-benefit analysis of the two high-temperature thermal processes suggested for implementation (rotary kiln incinerator and plasma arc torch) and identify the most appropriate technology for treatment and disposal of the Hanford Site's PCB/radioactive contaminated waste. Since there are other mixed wastes at the Hanford Site that could be treated by the same technology to meet RCRA regulations, the cost-benefit analysis should include these wastes to realize economies of scale.

- Identify the regulatory requirements for constructing and operating the selected treatment/disposal technology and prepare a strategy to obtain new permits, modify existing permits, and/or obtain agency approvals (e.g., permit to construct, air emissions permit, RCRA permit, and TSCA approval).

- Prepare a detailed waste analysis plan and characterize all the PCB-contaminated waste according to the specifications in the plan, which will include provisions to test for classification as RCRA hazardous waste.

- Evaluate the need to conduct treatability studies to establish design criteria and operating performance expectations. If appropriate, prepare plans to conduct such studies, develop the bid specification package, negotiate work scope, and award contract.

- Conduct an engineering study of the selected technology and prepare a conceptual design report that identifies and describes the design and operating specifications for the facility.

An incinerator will be constructed as a standalone project. (It will not be a part of the WRAP Facility.)

9 2 1 2 6 4 0 0 9 4 7

3.13.5 Waste Reduction

All plants and processes that generate waste that is shipped to the Hanford Central Waste Complex are required to have a waste minimization program and a low-level waste certification plan in place. The effectiveness and implementation of these programs are audited on a regular basis. The following are descriptions of key elements of these programs:

- To the extent practical, all mixed waste is segregated and packaged separately from low-level waste or transuranic waste that contains no dangerous constituents

- The volume of mixed waste is reduced by compaction when possible

- To minimize the generation of mixed waste, generators actively seek nonhazardous alternatives for the hazardous constituents in their processes

- Waste is characterized and the potential for minimization is investigated
- Minimization goals are set annually and tracked on a quarterly basis
- Methodology for radionuclide and physical/chemical characterization is identified, but not fully implemented
- Waste handling, segregation, and certification will be performed following detailed procedures when the disposal criteria are promulgated
- A Quality Assurance Program Plan and implementing procedures are required.

3.13.6 Variances, Exemptions, Time Extensions

The Hanford Central Waste Complex contains waste that is restricted from disposal because it contains constituents on the California list (40 CFR 268.32), solvents (40 CFR 268.30), and by the Third-Third land disposal restrictions (55 FR 22520).

The Third-Third Promulgation (55 FR 22520) provided for a 2-year national capacity variance from the land disposal restrictions for mixed waste. This variance allows continued storage of these wastes. In the event that sufficient treatment capacity for this waste is not available at the expiration of this variance (August 1992), the Tri-Party Agreement (Ecology et al. 1990) will allow continued storage of this waste until sufficient treatment capacity is available in accordance with the schedules in the agreement.

The Tri-Party Agreement provides for continued storage of California list (40 CFR 268.32) and solvent waste (40 CFR 268.30) until treatment capacity is developed for these wastes. The agreement requires treatment and disposal capacity wastes to be developed on the following schedule:

- Completion of WRAP Facility Module 1; required to sort and repackage waste and initiation of operations by September 1996 (Milestone M-18-00)
- Completion of WRAP Facility Module 2; required to provide waste treatment capabilities that minimize the land disposal of low-level radioactive and mixed waste by September 1999 (Milestone M-19-00).

If additional variances, exemptions, or time extensions are required as a result of delays in the development of treatment, storage, or disposal capacity or the demonstrated need for using alternative treatment technologies, they will be applied for in accordance with the procedures detailed in the Tri-Party Agreement.

The required treatment for PCB waste is incineration. Currently there are no facilities available for incineration of mixed PCB waste. Alternative treatments currently are being investigated. The PCB waste will be stored at

9 2 1 2 6 4 0 0 9 4 8

the Hanford Central Waste Complex until an equivalent treatment technology is demonstrated and approved by EPA and Ecology. If availability of required treatment will extend the length of PCB waste storage beyond the time allotted to treat and dispose of other Hanford Central Waste Complex waste, a variance to the storage prohibition will be applied for in accordance with the procedures detailed in the Tri-Party Agreement.

3.14 RETRIEVABLY STORED LOW-LEVEL AND TRANSURANIC WASTE

Since 1970, defense materials production, research, and waste management have produced transuranic waste. Before 1970 there were no regulations that defined or required separation of transuranic waste and it was commingled and buried with low-level waste. Initially, the definition of transuranic waste included any waste with suspect alpha contamination. This definition was later (1972) changed to include only waste containing greater than 10 nanocuries per gram of alpha-emitting isotopes with half-lives greater than 20 years, and still later (1982) the definition was changed to include only waste with greater than 100 nanocuries per gram of transuranic radionuclides. Transuranic radionuclides are those having an atomic number greater than 92. Because existing technology in the 1970s could not determine the concentration of transuranic radionuclides at 10 or even 100 nanocuries per gram, any solid waste that was suspected to be transuranic was placed in retrievable storage (WHC 1989b).

Retrievably stored low-level waste is waste that was generated after 1980 and in 1987 or before, when use of retrievable storage units was terminated. The waste contained liquid organics that precluded disposal as solid low-level waste because of concerns about affecting the ion exchange capacity of the soil. This waste is stored in retrievable storage units in the same manner as retrievably stored transuranic waste.

The retrievably stored waste at the Hanford Site was not segregated based on the physical or chemical characteristics of the waste. The waste containers are filled with mixtures of materials such as failed process equipment including pumps, resin columns, and tanks; laboratory and room trash including paper, plastics, glassware, cloth, solidified liquids, and animal carcasses; and decontamination and decommissioning rubble including concrete, piping, and soils.

The waste is contained primarily in 0.21-cubic-meter drums and metal or wood boxes. Waste also is contained in casks, concrete boxes, concreted culverts, and other miscellaneous containers.

Before 1986, transuranic waste had been placed in a variety of storage configurations. These storage configurations consisted of shallow land trenches, concrete-lined "V" trenches, and earth-covered asphalt pads and caissons (WHC 1990h). The transuranic waste has been stored in the TRUSAF since 1986 (Chapter 3.0, Section 3.15) and in the Hanford Central Waste Complex since 1988 (Chapter 3.0, Section 3.13).

The majority of the transuranic waste stored in the 200 Areas is generated by onsite activities; however, some of the transuranic waste is

9 2 1 2 6 4 0 0 9 4 9

generated offsite and shipped to the Hanford Site for retrievable storage (RHO 1985). Approximately 15,000 cubic meters of transuranic waste had been placed in storage in the 200 Areas in over 38,700 containers.

Also in the low-level category are naval submarine reactor compartments currently stored in the 200 East Area Burial Ground 218-E-12B, Trench 94. These defueled reactor compartments are intended for permanent disposal, without further treatment, in their current location. For this reason, the compartments are not included in the storage inventory tables, waste minimization sections, treatment discussions, etc., of this report. Although the compartments currently are stored, permit applications have been filed to allow disposal. Two permits are required: one from Ecology for lead disposal in a dangerous waste disposal facility and one from the EPA for PCB disposal in a chemical waste landfill. As much of the PCBs and lead as practical have been removed. The remaining lead and PCBs are encapsulated within the thick sealed hulls of the compartments.

As of September 1991, 20 compartments were stored awaiting disposal. Additional reactor compartments are expected to be shipped to the Hanford Site in the future.

9 2 1 2 6 4 0 0 9 5 0

3.14.1 Generation

Extensive process knowledge is not available for many of the containers that have been placed in retrievable storage. The best available information is maintained in the computerized Richland Solid Waste Information Management System database. The Richland Solid Waste Information Management System contains only that information provided by the waste generator. In the past, exhaustive waste descriptions that could be used to classify a waste accurately were not required and data entries such as "contaminated debris" and "mixed fission products" were common (WHC 1989b). Because of incomplete classification of waste in the past, it is estimated that 10% of the transuranic waste may be mixed waste.

3.14.2 Characterization

This section discusses waste characterization based on process knowledge and sample analysis, identifies known designations, and addresses any further characterization required or planned.

3.14.2.1 Process Knowledge. Limited process knowledge has been used to characterize the transuranic mixed waste currently in storage. In the past few years changing waste reporting, manifesting, and packaging requirements have greatly increased the availability of process waste data for what may be used to characterize waste. Information related to the physical, chemical, and radiological properties of newly generated transuranic waste is available. This availability is anticipated to reduce the amount of sampling and treatment required to meet long-term storage packaging requirements.

3.14.2.2 Sample Analyses. Sampling for mixed waste constituents will be performed when the transuranic waste is retrieved from storage for processing.

All drums and boxes of transuranic waste in interim storage will be opened. Each individual container will be sampled and these samples will be prepared for transport to analytical laboratories in the 200 West Area for analysis.

3.14.2.3 Waste Designation and Basis. A review of the Richland Solid Waste Information Management System data on transuranic waste in retrievable storage units identified many constituents in each waste container that are designated dangerous waste. Data entered since 1988 has the designation of the dangerous constituents of each waste package assigned. When the designation was not found on the Richland Solid Waste Information Management System report, waste designation tables were used to assign a designation to the constituents identified in transuranic waste placed in storage before 1988. Table 3-16 summarizes the volume and designation of low-level mixed waste listed on the Richland Solid Waste Information Management System in retrievable storage units. Table 3-17 summarizes the volume and designation of transuranic mixed waste listed on the Richland Solid Waste Information Management System in retrievable storage units.

It is anticipated that additional transuranic mixed waste will be identified when waste is retrieved from storage for repackaging for disposal (WHC 1989b).

3.14.2.4 Uncertainty of Waste Designation. There is high confidence in the accuracy of the designations for newly generated transuranic waste material. Older waste will require additional characterization before treatment and disposal.

3.14.2.5 Schedule for Further Characterization. In situ sampling of retrievably stored transuranic waste will be initiated in FY 1991 with characterization completed by FY 1994 (WHC 1989c). The purpose of the sampling is to assess the current and future integrity of the retrievably stored waste containers and analyze contents. These objectives will be achieved by visual and nondestructive examination of waste containers, retrieval, and nondestructive assay.

Additional sampling will be performed as necessary to adequately characterize suspected mixed waste when waste packages are retrieved and processed through the WRAP Facility.

3.14.3 Storage

This section describes the current storage units and inventories, and assesses compliance with applicable regulations.

3.14.3.1 Storage Unit and Capacity. The waste stored in the retrievable storage unit is primarily contained in 0.21-cubic meter drums and boxes. Initially drums were painted; however, after 1982, galvanized drums were used to minimize corrosion attributed to high humidity in storage modules. Initially boxes were constructed of plywood and steel, later of plywood coated with fiberglass reinforced polyester, and currently of steel. Waste also is contained in casks, concrete boxes, concreted culverts, and other miscellaneous containers. These containers were placed in a variety of

storage configurations. These storage configurations consisted of shallow land trenches, concrete lined "V" trenches, and earth-covered asphalt pads and caissons (WHC 1990h) (Figures 3-20 and 3-21).

Retrievably stored transuranic waste is located in the 218-W-3A, -4B, -4C, and 218-E-12B Burial Grounds. Newly generated (after 1985) transuranic waste is and will be stored in the TRUSAF and Hanford Central Waste Complex storage buildings.

Four different container storage configurations were used for contact-handled transuranic waste at the Hanford Site. The first storage configuration consists of waste drums stacked horizontally in a gravel-bottom "V" trench. The waste drums were covered directly with soil. This storage configuration was used from 1970 through 1972.

The second storage configuration was an engineered concrete and metal storage structure known as the V-7 trench. In the V-7 trench, drums were stacked on a 45-degree angle. This storage concept proved too expensive to implement and was used only between June 1972 and March 1973.

The third configuration consists of wide bottom and "V" trenches. In both cases it is unknown if the trench floor was covered with plywood and drums were stacked vertically or if it was placed similar to configuration one (Figure 3-20). Boxed waste in this configuration may contain shoring used to protect it from collapse because of soil pressure. This storage configuration was used in the 200 West Area 218-W 3A and 218-W 4B Burial Grounds starting in 1974.

The fourth configuration consists of wide-bottom trenches. This storage configuration is the same as the third except the floor is asphalt. This storage configuration was used in the 218-W-4B Burial Ground, trench 07, from 1974 until 1980 and in the 218-W-4C Burial Ground from 1978 to the present.

Some of the waste mentioned above is remote-handled waste. In addition, small containers of remote-handled transuranic waste are stored in buried caissons; these caissons no longer are used for newly generated waste. The caissons are reinforced concrete cylinders 2.7 meters in diameter by 3 meters high and are buried 4 meters below grade. The caissons have 0.9-meter diameter inlet chutes, offset or convoluted to eliminate radiation or 'shine' from the contents (Figure 3-21). Caissons are equipped with electrically driven exhausters fitted with HEPA filters.

Because the practice of placing transuranic waste in burial ground retrievable storage units was discontinued in 1986, and no additional waste is planned to be added, the storage capacity for this waste is adequate.

3.14.3.2 Amount in Storage. Approximately 15,440 cubic meters of waste have been placed in storage in the 200 Area retrievable storage units. Of this volume, 14.1% or 2,184 cubic meters are known to be dangerous waste based on information contained in the Richland Solid Waste Information Management System. Additional waste may be redesignated as dangerous land disposal restricted waste upon retrieval.

The amount and classification of land disposal restricted waste known to be restricted from land disposal stored in retrievable storage units is shown in Tables 3-16 and 3-17.

3.14.3.3 Storage Compliance Assessment. The retrievable storage units were reviewed for compliance with interim status dangerous waste regulations during 1988. This section discusses past and present disposal practices and discusses the interim status compliance requirements.

Waste was placed routinely in the retrievable storage units in shallow unlined trenches since 1960. From 1982 through 1987, radioactive liquid organic waste was placed in retrievable storage units. Burial of mixed waste with dose rates less than 200 millirems per hour at the container surface was halted in 1987. Mixed waste will be placed in lined trenches with leachate collection and removal systems. The transuranic mixed waste eventually will be retrieved, treated to comply with land disposal restriction requirements at the WRAP Facility or other appropriate treatment unit, and disposed of at a permitted dangerous waste disposal unit.

The compliance assessment noted the following specific areas of noncompliance with interim status requirements:

- The contingency plan should be upgraded to account for unit requirements of dangerous waste management
- A plan to inspect mixed waste placed in retrievable storage units should be developed
- Dangerous waste containers and accessible mixed waste backlog should be labeled
- A burial box and cardboard compaction and segregation strategy should be developed
- Additional groundwater monitoring wells around the low-level burial grounds, which include the retrievable storage units, should be installed.

Compliance action schedules were developed as part of the Tri-Party Agreement (Ecology et al. 1990). Compliance with contingency plan upgrade, inspection, and labeling requirements was achieved by June 1990 (DOE-RL 1991). Use of cardboard boxes for burial was terminated effective January 1990. Processing facilities for compatible wastes currently are available. Additionally, a total of 51 groundwater monitoring wells were installed by June 1990, and 18 groundwater monitoring wells are planned to be installed by December 1991.

The Part B permit application, which documents the current compliance status with the dangerous waste regulations, was submitted in December 1989. Therefore, the retrievable storage units comply with the storage unit regulations as modified by the Tri-Party Agreement.

9 2 1 2 6 4 0 0 9 5 3

3.14.4 Treatment

This section describes the current and proposed treatment of retrievably stored transuranic waste.

3.14.4.1 Current Treatment. No waste in retrievable storage units is being treated.

3.14.4.2 Proposed Treatment. Waste from retrievable storage units will be retrieved and shipped to the WRAP Facility. Organics will be burned in a planned incinerator or will be sent offsite for treatment. The purpose of the WRAP Facility is to treat waste so that it is acceptable for permanent disposal. Treatment activities include segregation of low-level waste and transuranic waste from hazardous waste, repackaging waste, conducting nondestructive examination and nondestructive assaying of packaging, and certifying packages for shipment and disposal.

The WRAP Facility will be constructed as two modules with Module 1 operations in 1996 and Module 2 operations in 1999. Detailed descriptions of these modules are provided in Chapter 3.0, Section 3.13.4.2.

3.14.5 Waste Reduction

The retrievable storage units no longer accept waste; therefore, a waste minimization program is not applicable. However, waste minimization will be considered when evaluating cleanup and disposal alternatives.

3.14.6 Variance, Exemptions, Time Extensions

The waste stored in the retrievable storage units after 1982 is restricted from land disposal because it contains California list waste (40 CFR 268.32) and/or solvent waste (40 CFR 268.30) and/or waste identified in the Third-Third Promulgation (55 FR 22520).

The Third-Third Promulgation provided for a 2-year national capacity variance for mixed waste from the land disposal restrictions. This variance allows continued storage of these wastes. In the event that sufficient treatment capacity for this waste is not available at the expiration of this variance (August 1992), the Tri-Party Agreement (Ecology et al. 1990) will allow continued storage of this waste until sufficient treatment capacity is available in accordance with the schedules in the agreement.

9 2 1 2 6 4 0 0 9 5 4

The Tri-Party Agreement provides for continued storage of California list and solvent waste until treatment capacity is developed for these wastes. The agreement requires treatment and disposal capacity wastes to be developed on the following schedule:

- Completion of WRAP Facility Module 1, required to sort and repackage waste, and initiation of operations by September 1996* (Milestone M-18-00)

- Completion of WRAP Facility Module 2, required to provide waste treatment capabilities that minimize the land disposal of low-level radioactive and mixed waste by September 1999 (Milestone M-19-00).

If additional variances, exemptions, or time extensions are required as a result of delays in the development of treatment, storage, or disposal capacity or the demonstrated need for using alternative treatment technologies, they will be applied for in accordance with the procedures detailed in the Tri-Party Agreement.

9 2 1 2 6 4 0 0 9 5 5

3.15 TRANSURANIC WASTE STORAGE AND ASSAY FACILITY STORED WASTE

Transuranic solid waste packaged in compliance with the WIPP/Waste Acceptance Criteria is stored in the 200 West Area, in the 224-T Building, also known as the TRUSAF.

3.15.1 Generation

This section describes the waste generation process and estimates the generation rate.

3.15.1.1 Process. The following are descriptions of current sources of transuranic mixed waste.

- The PUREX Plant reprocessed irradiated fuel from N Reactor. Radioactive solid waste collected from the PUREX Plant consists of room waste such as gloves, paper, and plastics. The transuranic portion is separated from the low-level waste. Some of the waste, such as mercury-filled light tubes, rags, and aerosol cans, are definitely dangerous and separate collection receptacles are established for collection of this waste. To ensure that dangerous waste is not inappropriately discarded with the low-level waste or transuranic waste, the waste is sorted before packaging and shipment.

- The PFP routinely generates mixed solid waste. Fluorescent light tubes containing mercury are used in processing gloveboxes and radiation areas throughout the PFP. The majority of PCB ballasts

*Pending a Tri-Party Agreement Change Request submittal, this date could change to March 1997.

and fluorescent light tubes are surveyed for radiological contamination and released. These waste streams are handled as hazardous waste. A small portion of the ballasts and fluorescent light tubes are radiologically contaminated and must be treated as mixed waste. Lead-lined gloves on processing gloveboxes are routinely replaced to minimize the potential for glove failure and subsequent spread of radioactive contamination. Laboratory waste containing xylene and toluene are generated during the analysis of samples for neptunium and plutonium. The waste is packaged and shipped as solid waste.

- Operations of the analytical laboratories in the 200 West Area generate transuranic mixed waste. Included in this solid waste is radioactively contaminated lead, outdated solid commercial chemicals, and lead shielded waste from laboratory hot-cell operations.

- The PNL generates small quantities of transuranic mixed waste from research operations that are fully characterized by process knowledge.

3.15.1.2 Generation. The TRUSAF receives some containers of waste from offsite. These containers are sent to TRUSAF for storage before shipment to the WIPP. The projected generation for TRUSAF waste is included with the Hanford Central Waste Complex (Chapter 3.0, Section 3.13). The TRUSAF only accepts waste certified for disposal at the WIPP that is packaged in 0.21-cubic meter drums. Presently, projected generation rates of transuranic waste that meet TRUSAF storage criteria are unavailable.

3.15.2 Characterization

This section discusses waste characterization based on process knowledge and sample analysis, identifies known designations, and addresses any further characterization required or planned.

To be accepted at TRUSAF, waste must be packaged and characterized as described in the *Hanford Site Radioactive Solid Waste Acceptance Criteria* (WHC 1990i). These criteria require that the generator of the waste characterize each individual container of waste with sufficient accuracy to permit proper certification, shipment, and storage. Kinds and quantities of dangerous constituents in the waste and physical and chemical characteristics of the waste must be known and recorded on appropriate forms.

3.15.2.1 Process Knowledge. The waste characteristics are determined by the waste generator based on documented knowledge of the process generating the waste. The generators of all waste shipped to TRUSAF are periodically audited to ensure that waste is being properly characterized. Currently, only three facilities (PUREX, PFP, and Strontium Semi-Works) are able to certify waste.

3.15.2.2 Sample Analyses. Samples are collected at the point of generation for any sample analysis required to adequately characterize for waste

9 2 1 2 6 4 0 0 9 5 6

designation. No samples are collected at TRUSAF. Any waste that requires sampling will not be certified and consequently will be shipped to the Hanford Central Waste Complex for storage and subsequent treatment.

3.15.2.3 Waste Designation and Basis. The dangerous waste designation of each waste container is determined at its point of generation based on knowledge of the waste placed in the container. The waste code designations and volumes are listed in Table 3-24.

3.15.2.4 Uncertainty of Waste Designation. The designations of waste stored in TRUSAF are considered to be accurate.

3.15.2.5 Schedule for Further Characterization. Certified waste in interim storage is awaiting shipment to the WIPP. No further characterization is required for this waste.

3.15.3 Storage

This section addresses current storage units, describes inventories, and assesses compliance with applicable regulations.

3.15.3.1 Storage Unit and Capacity. The TRUSAF building originally was constructed to purify plutonium nitrate by the lanthanum fluoride process; it was idle for several years after new technology made it obsolete. In the early 1970s, the building was modified to meet requirements for storage of plutonium-bearing scrap and liquids. The cells in the processing areas have been completely sealed and isolated from the operating gallery and service areas. These operating and service areas have been stripped of all unnecessary control equipment, panelboards, and partitions to provide approximately 1,068 square meters of storage space on three floors (Figure 3-22). The unit storage capacity is 420 cubic meters (2,000 drums).

Accumulation of certified transuranic waste in 0.21-cubic meter drums that exceeds the capacity of TRUSAF will be stored in the Hanford Central Waste Complex. Future plans for the Hanford Central Waste Complex include a TRUSAF replacement to be called Mixed Waste Storage Phase V, which will be operational concurrently with the WRAP Facility Module 1.

3.15.3.2 Amount in Storage. Table 3-18 summarizes the volume of each designated transuranic mixed waste stored in TRUSAF and listed on the Richland Solid Waste Information Management System.

3.15.3.3 Storage Compliance Assessment. The TRUSAF unit was reviewed for compliance with interim status dangerous waste regulations during 1988. The need for an upgraded contingency plan was identified and the plan was completed.

A Part B permit application will be submitted in June 1992 demonstrating compliance with final facility regulations.

9 2 1 2 6 4 0 0 9 5 7

3.15.4 Treatment

This section describes the current and proposed treatment of stored transuranic waste.

3.15.4.1 Current Treatment. At TRUSAF, packaged transuranic waste is x-rayed (to ensure what can be identified generally agrees with the documentation) and assayed to determine transuranic activity. All transuranic waste packages that meet the WIPP/Waste Acceptance Criteria requirements are placed in interim storage pending shipment to the WIPP. Noncertifiable transuranic waste is sent to the Hanford Central Waste Complex or stored in the TRUSAF. When the WRAP Facility Module 1 begins operating, nondestructive evaluation and assay activities will be transferred from TRUSAF to the WRAP Facility.

3.15.4.2 Proposed Treatment. Certified transuranic waste in TRUSAF interim storage will be shipped to the WIPP for permanent storage.

3.15.5 Waste Reduction

All plants and processes that generate waste that is shipped to TRUSAF are required to have a waste certification program in place. The effectiveness and implementation of this program is audited on a regular basis. The following are key elements of this program:

- To the extent practical, all mixed waste is segregated and packaged separately from low-level waste or transuranic waste that contains no hazardous or dangerous constituents
- The volume of mixed waste is reduced by compaction when possible
- To minimize the generation of mixed waste, generators actively seek nondangerous alternatives for the dangerous constituents in their processes
- If allowed by regulation, mixed waste is treated to remove the dangerous constituents
- Corrosive materials are neutralized (if allowed by regulation) to remove their corrosive character or packaged in a manner to ensure integrity of the containment barriers
- Methodology for radionuclide and physical/chemical characterization is identified, but not fully implemented
- Waste handling, segregation, and certification will be performed following detailed procedures when the disposal criteria are promulgated
- A Quality Assurance Program Plan and implementing procedures are required.

9212640095 8

3.15.6 Variances, Exemptions, Time Extensions

The waste stored at TRUSAF is restricted from land disposal because it contains solvent waste (40 CFR 268.30) or by the Third-Third Promulgation (55 FR 22520). The Third-Third Promulgation provided for a 2-year national capacity variance from the land disposal restrictions for mixed waste. This variance allows continued storage of these wastes. In the event that sufficient treatment capacity for this waste is not available at the expiration of this variance (August 1992), the Tri-Party Agreement (Ecology et al. 1990) will allow continued storage of this waste until sufficient treatment capacity is available in accordance with the schedules in the agreement.

The Tri-Party Agreement provides for continued storage of California list (40 CFR 268.32) and solvent waste until treatment capacity is developed for these wastes.

If additional variances, exemptions, or time extensions are required as a result of delays in the development of treatment, storage, or disposal capacity, they will be applied for in accordance with the procedures detailed in the Tri-Party Agreement. Treatment of radioactive mixed waste will be initiated in 1999.

3.16 303-K STORED WASTE

The 303-K Radioactive Mixed Waste Storage Facility (303-K Facility) is located in the northwest portion of the 300 Area of the Hanford Site. Since 1943, the 303-K Facility has stored various radioactive and dangerous process materials generated by fuel fabrication in the 300 Area (DOE-RL 1990d). The 303-K Radioactive Mixed-Waste Storage Facility has been used for the interim storage of the following mixed waste streams generated within the 300 Area:

- Spent decreasing solvents
- Zircaloy-2 and beryllium/zircaloy-2 chips and fines.

Routine waste has not been added to the 303-K Facility since mid-1987.

3.16.1 Generation

This section describes the waste generation process and estimates the generation rate for the 303-K Facility. The 303-K Facility has been in operation since 1943 and continues today as an interim storage facility for dangerous and mixed waste generated by cleanup activities in the fuel manufacturing processing in the 300 Area.

The 303-K Facility has the capacity to store 200 drums that may contain waste designated D001, D002, D004, D005, D006, D007, D008, D009, D011, F001, F003, WC01, WP01, WP02, WT01, and WT02.

3.16.1.1 Process. The 303-K Facility has been used since January 1986 for the storage of containers filled with low-level radioactive waste and mixed

9 2 1 2 6 4 0 0 9 5 9

waste generated at other fuel manufacturing buildings in the 300 Area. Before 1987 the waste that was potentially contaminated with uranium included waste oils and cutting lubricants, concreted waste from the 304 Facility, salt crystals from the waste-acid tanks in Building 334-A, degreaser solvents, acid absorbed on opal clay, solids from the 313 Building waste-acid treatment process, and waste cutting oils with solvents from uranium machining operations in the 333 Building.

3.16.1.2 Generation. Approximately 50 to 100 0.21-cubic meter drums of waste were accumulated at the 303-K Facility annually before 1987. The maximum estimated inventory of containerized waste stored inside the 303-K Facility at any time was 200 drums or 42 cubic meters of waste.

Current wastes stored in the 303-K Facility and the approximate volume to be generated are shown below.

- Approximately 1,200 kilograms of spent degreasing solvents (F001, WC01, WP01, and WT01) and occasionally mixed with ethyl acetate (D001, F003, and WT02). Waste solvents were sometimes acidic and are corrosive (D002) and have contained TCLP toxic cadmium (D006). About 360 kilograms of this waste also contains ^{60}Co. No future generation of waste degreaser solvent is anticipated.

- Approximately 3 kilograms of zircaloy-2 and beryllium/zircaloy-2 chips and fines before concreting the waste. This material is designated ignitable (D001) because of its pyrophoric properties before concreting and is nonhazardous after concreting. About 30 kilograms of this waste are anticipated to be generated in FY 1991.

3.16.2 Characterization

The 303-K Facility contains radiologically contaminated spent chlorinated solvents and pyrophoric chips and fines from cleanup activities of the fuels manufacturing area in the 300 Area. Waste descriptions are provided in Table 3-19.

3.1.6.2.1 Process Knowledge. Pyrophoric beryllium/zircaloy-2 alloy and Zircaloy-2 chips and fines in water-filled drums are awaiting concretion in the 304 Building. After concreting, the waste will be nonhazardous and will be sent to the low-level burial ground.

In 1988 spent degreaser solvents (consisting of perchloroethylene, 1,1,1-trichloromethane, and rinse water from vapor degreasers) were absorbed on pads and placed in steel drums. A small amount of ethyl acetate/bromine solution generated during laboratory analysis of uranium oxides was occasionally mixed in some of the drums of spent degreaser solvent.

3.16.2.2 Sample Analysis. No further characterization is scheduled until after treatment at the WRAP Facility.

3.16.2.3 Waste Designation and Basis. The designation for waste currently stored at the 303-K Facility is based on process knowledge of the fuel fabrication operations in the 300 Area:

- D001, D002, D006, F001, F003, WC01, WP01, WT01, and WT02 for spent decreasing solvents
- D001 for zircaloy-2 and beryllium/zircaloy-2 chips and fines.

3.16.2.4. Uncertainty of Waste Designation. The designations of stored container wastes at the 303-K Facility are considered to be accurate.

3.16.2.5 Schedule for Further Characterization. Currently there are no plans for further waste characterization at the 303-K Facility.

3.16.3 Storage

This section discusses the 303-K Facility waste storage and capacity, identifies stored quantities, and assesses the compliance status of the unit.

3.16.3.1 Storage Unit Capacity. The 303-K Facility has a total storage capacity of 200 drums or 42 cubic meters of waste.

3.16.3.2 Amount in Storage. The amount of containerized mixed waste in storage (as of June 1991) in the 303-K Facility is 1,203 kilograms.

3.16.3.3 Storage Compliance Assessment. The 303-K Facility currently is scheduled for clean closure with an interim use as a less-than-90-day accumulation unit. The unit currently is operating under interim status as a RCRA treatment, storage, and disposal facility.

3.16.4 Treatment

This section discusses the 303-K Facility current and proposed waste treatment processes.

3.16.4.1 Current Treatment. The solvent waste currently stored at the 303-K Facility will be transferred to the Hanford Central Waste Complex for long-term storage until a final disposal option for the waste is established. The pyrophoric chips and fines will be concreted in the 304 Building and sent to the low-level burial ground.

3.16.4.2 Proposed Treatment. Current plans for the existing inventories of waste solvents at the 303-K Facility call for treatment offsite beginning in 1999.

3.16.5 Waste Reduction

Because N Reactor fuel has not been fabricated since December 1986, the 303-K Facility no longer receives routine waste products for long-term storage.

3.16.5.1 Proposed Waste Minimization Practices. The containerized solvent waste products stored at the 303-K Facility are to be transferred to the Hanford Central Waste Complex for interim storage until shipped offsite for treatment.

3.16.6 Variances, Exemptions, Time Extensions

The dangerous waste and waste residues are being placed in containers and transported to the Hanford Central Waste Complex for storage, as discussed in Section 3.16.3. This waste will be managed with other Hanford Central Waste Complex stored waste.

The waste stored at the 303-K Facility is restricted from land disposal because it contains solvent waste (40 CFR 268.30) and by the Third-Third Promulgation (55 FR 22520). The Third-Third Promulgation provided for a 2-year national capacity variance from the land disposal restrictions for mixed waste. This variance allows continued storage of these wastes. In the event that sufficient treatment capacity for this waste is not available at the expiration of this variance (August 1992), the Tri-Party Agreement (Ecology et al. 1990) will allow continued storage of this waste until sufficient treatment capacity is available in accordance with the schedules in the agreement.

The Tri-Party Agreement provides for continued storage of California list (40 CFR 268.32) and solvent waste until treatment capacity is developed for these wastes.

If additional variances, exemptions, or time extensions are required as a result of delays in the development of treatment, storage, or disposal capacity, they will be applied for in accordance with the procedures detailed in the Tri-Party Agreement.

9 2 1 2 6 4 0 9 6 2

This page intentionally left blank.

9 2 1 2 6 4 0 0 9 6 3

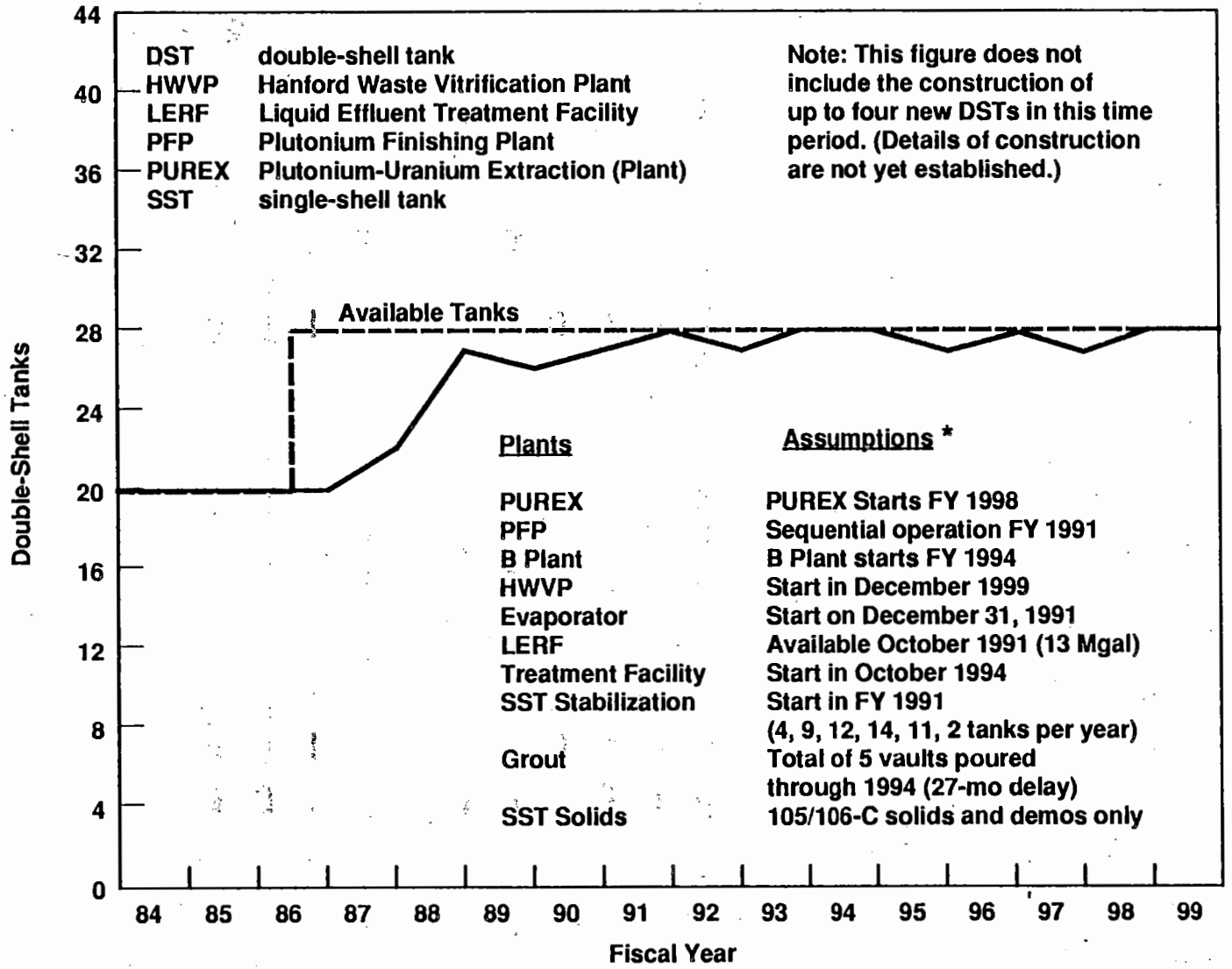

* These assumptions were established only for preparation of this tank space scenario and do not necessarily represent official positions or schedules.

79108088.27

Figure 3-1. Double-Shell Tank Space Summary.

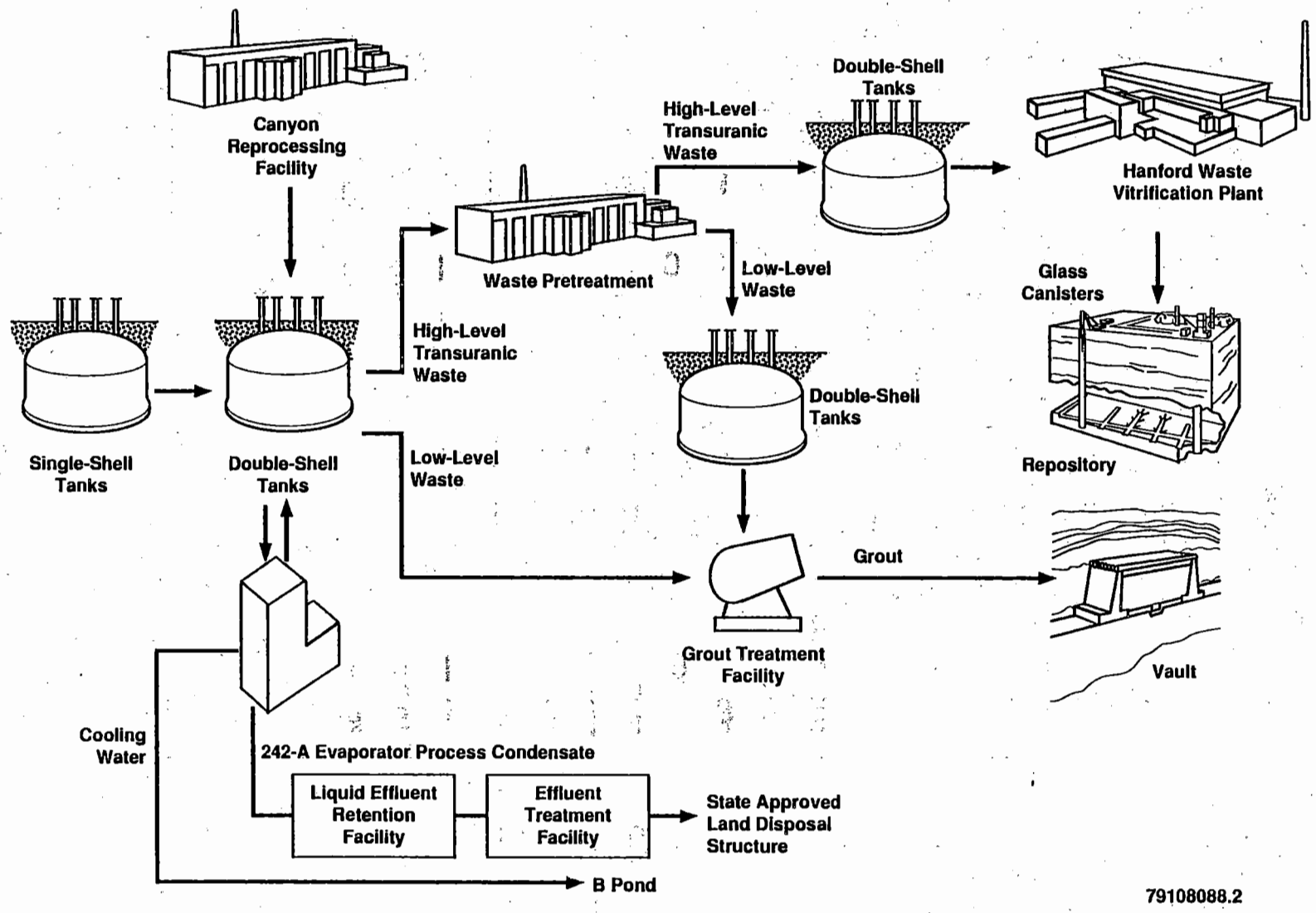

Figure 3-2. Double-Shell Tank Waste Disposal Flow Diagram.

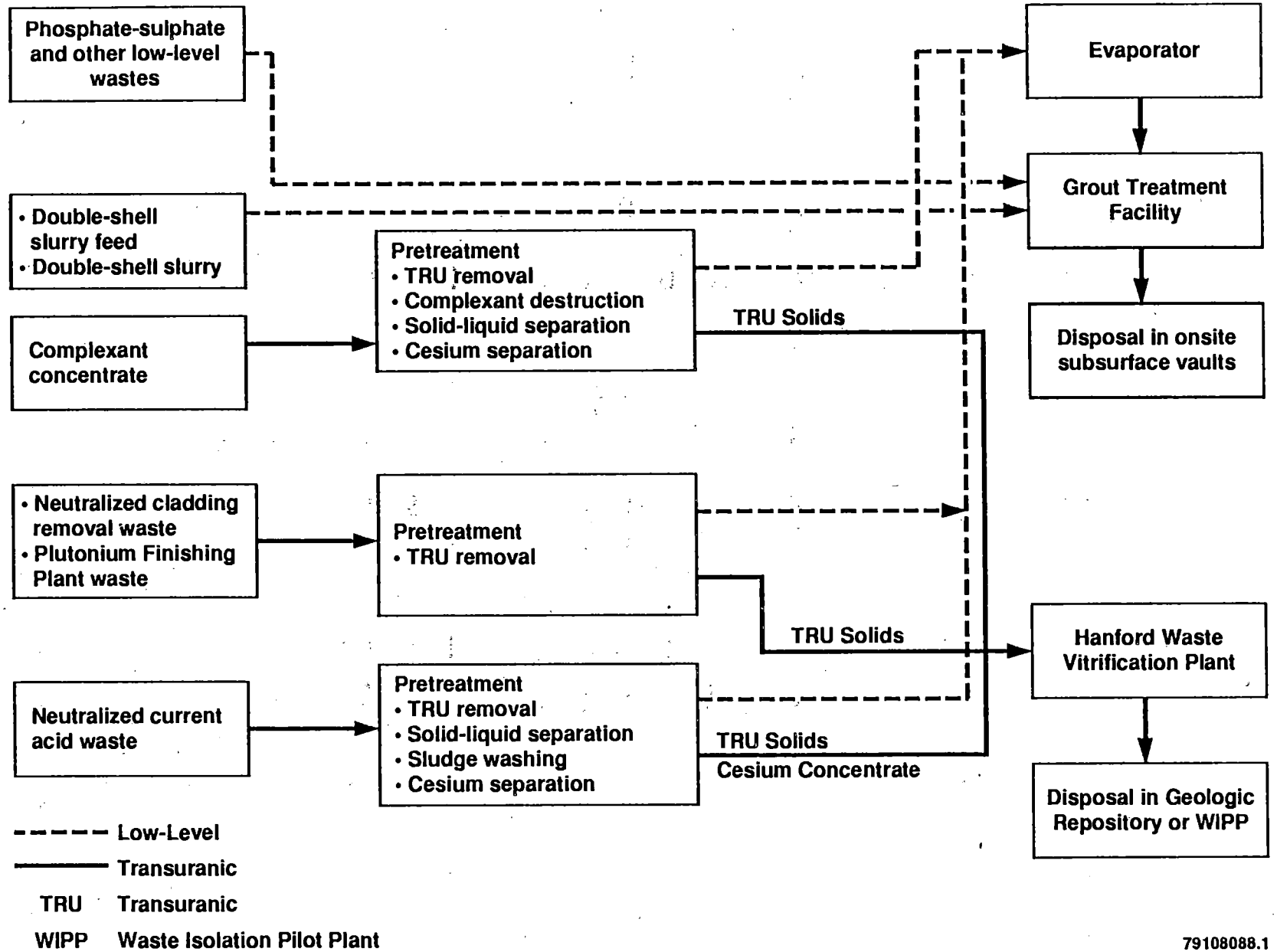

Figure 3-3. Process Flow Diagram for Disposal of Double-Shell Tank Waste.

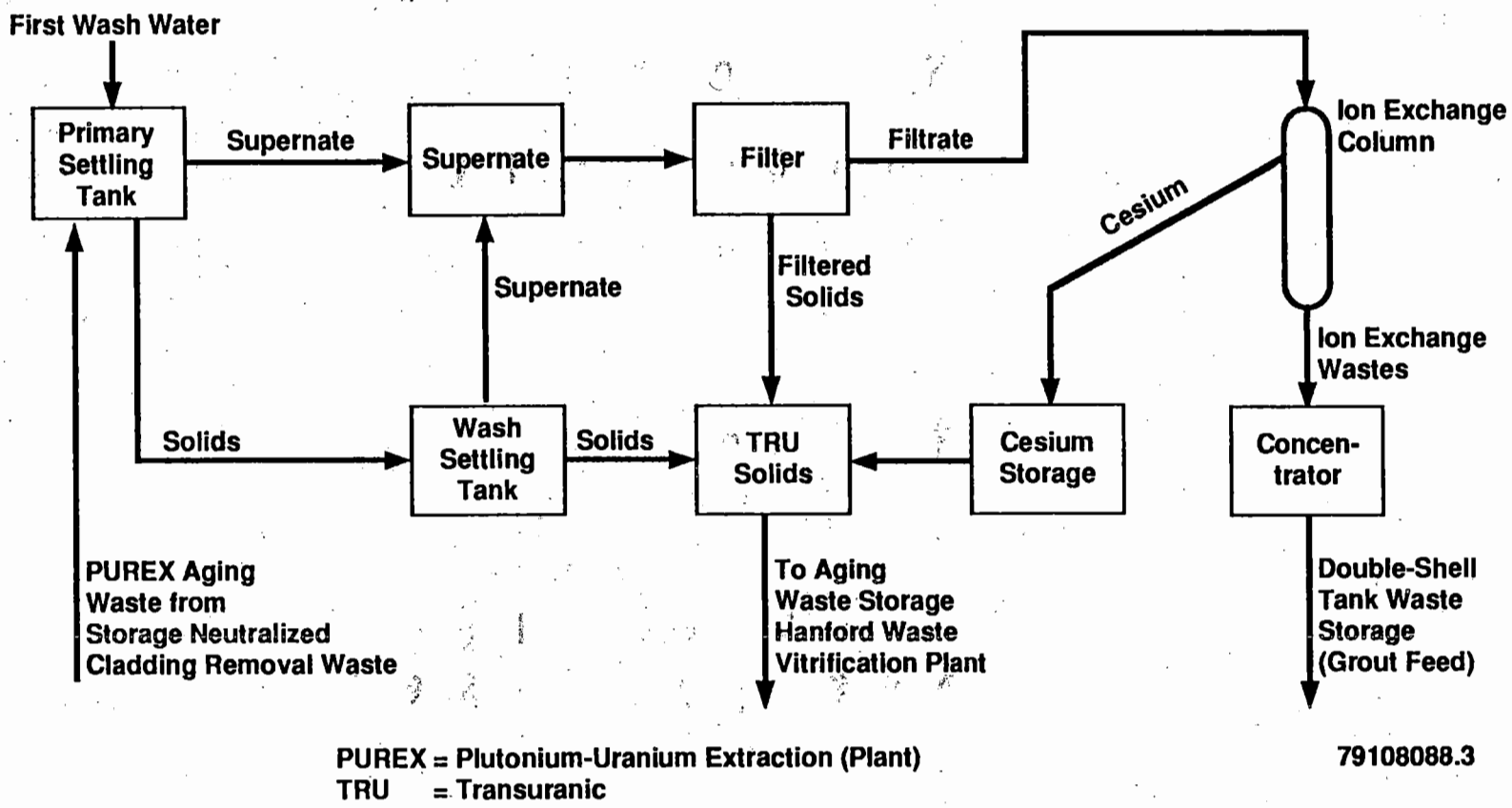

Figure 3-4. Process Flow Diagram for Neutralized Current Acid Waste Pretreatment.

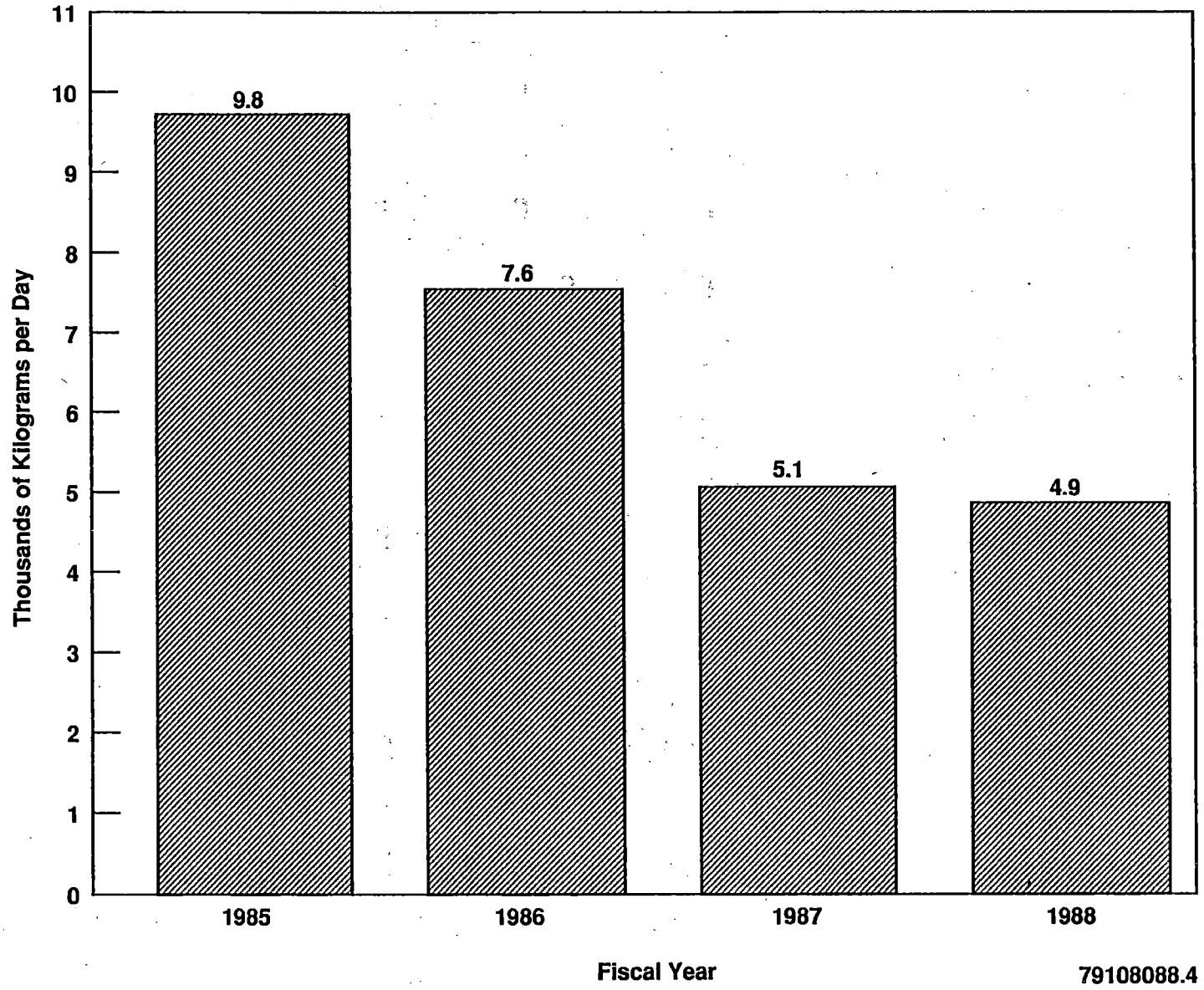

Figure 3-5. Plutonium-Uranium Extraction Aging Waste Transfers to Aging Waste Storage.

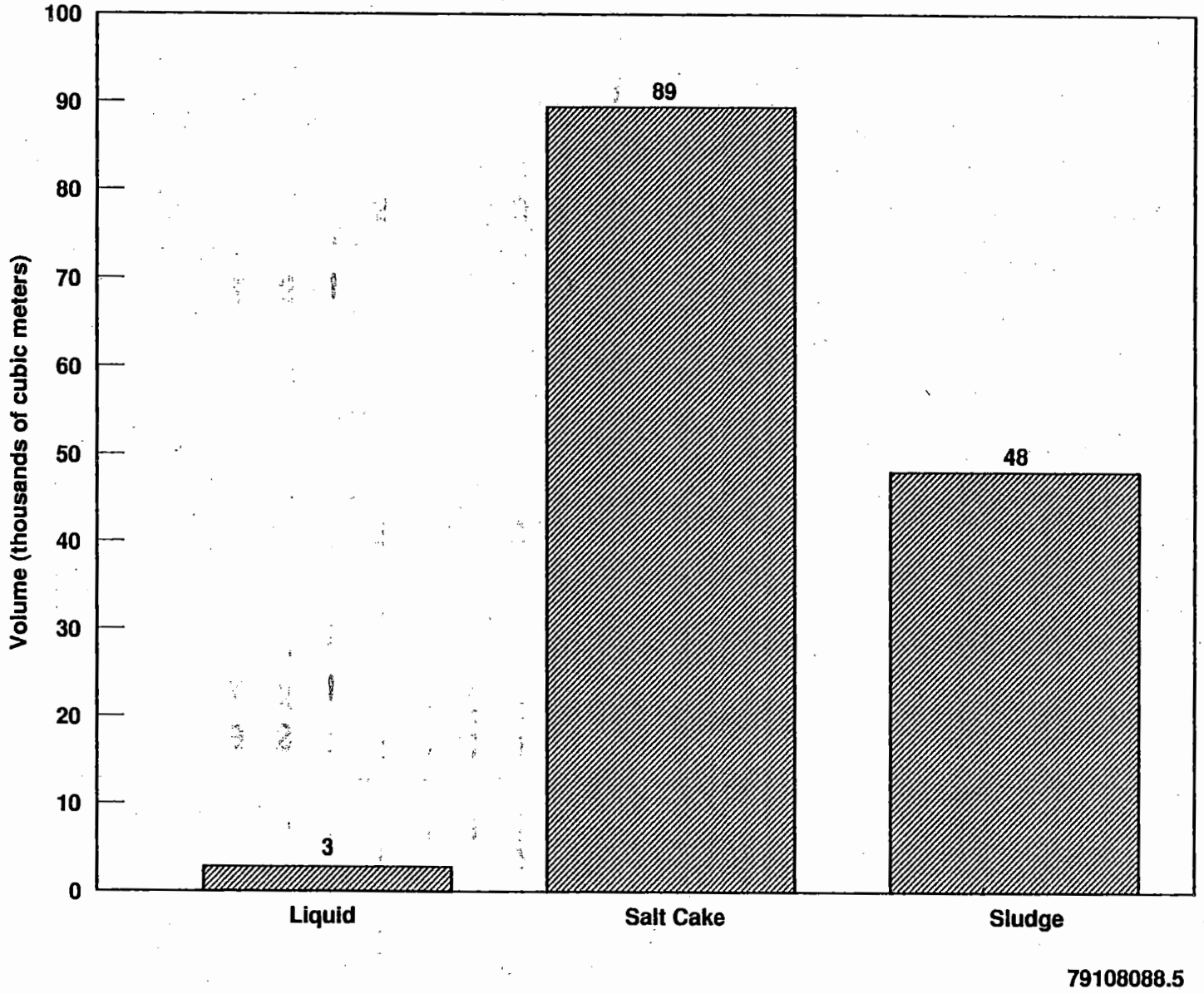

Figure 3-6. Relative Proportions of Supernatant, Sludge, and Salt Cake in Single-Shell Waste.

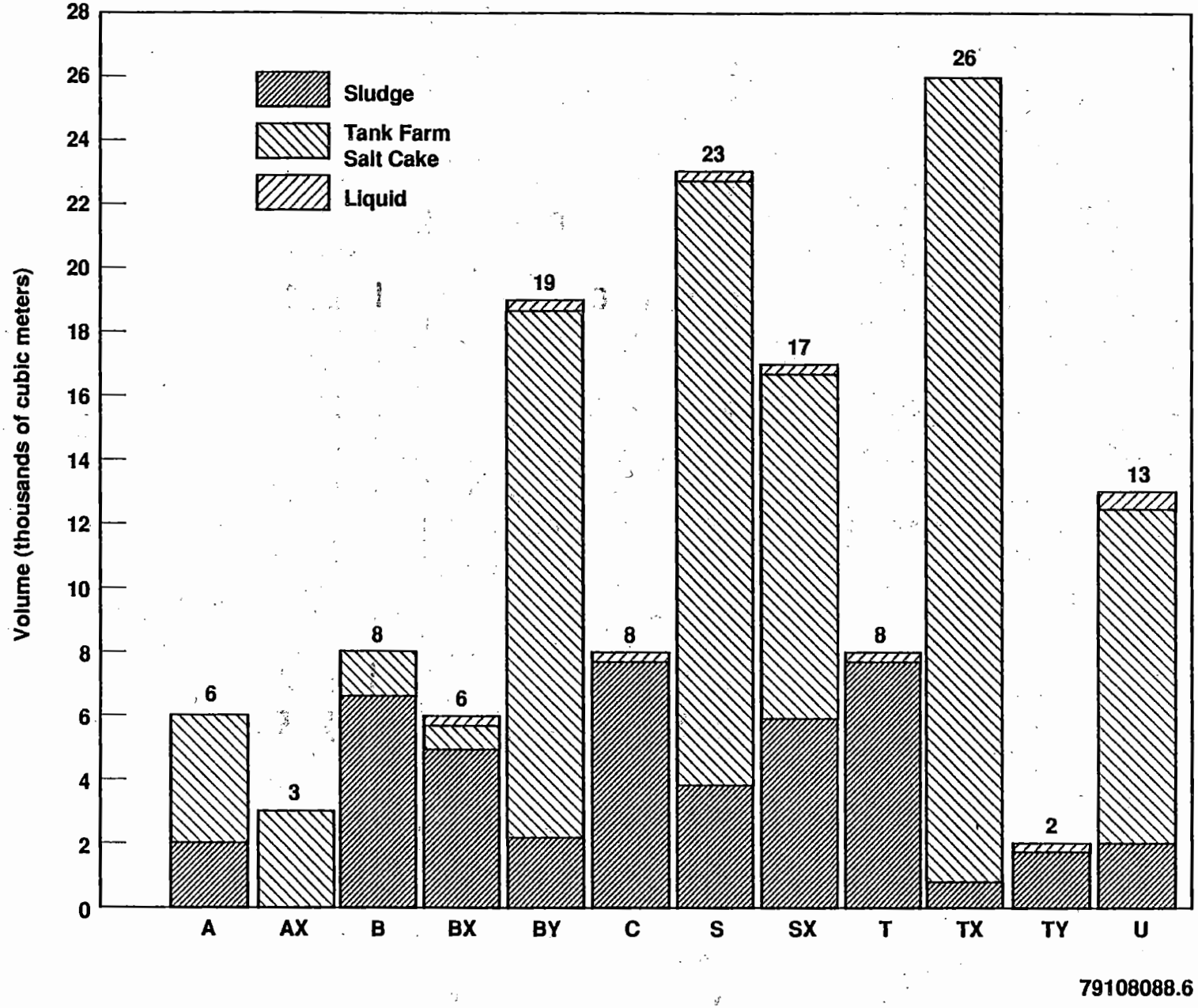

Figure 3-7. Single-Shell Tank Waste Inventory by Tank Farm.

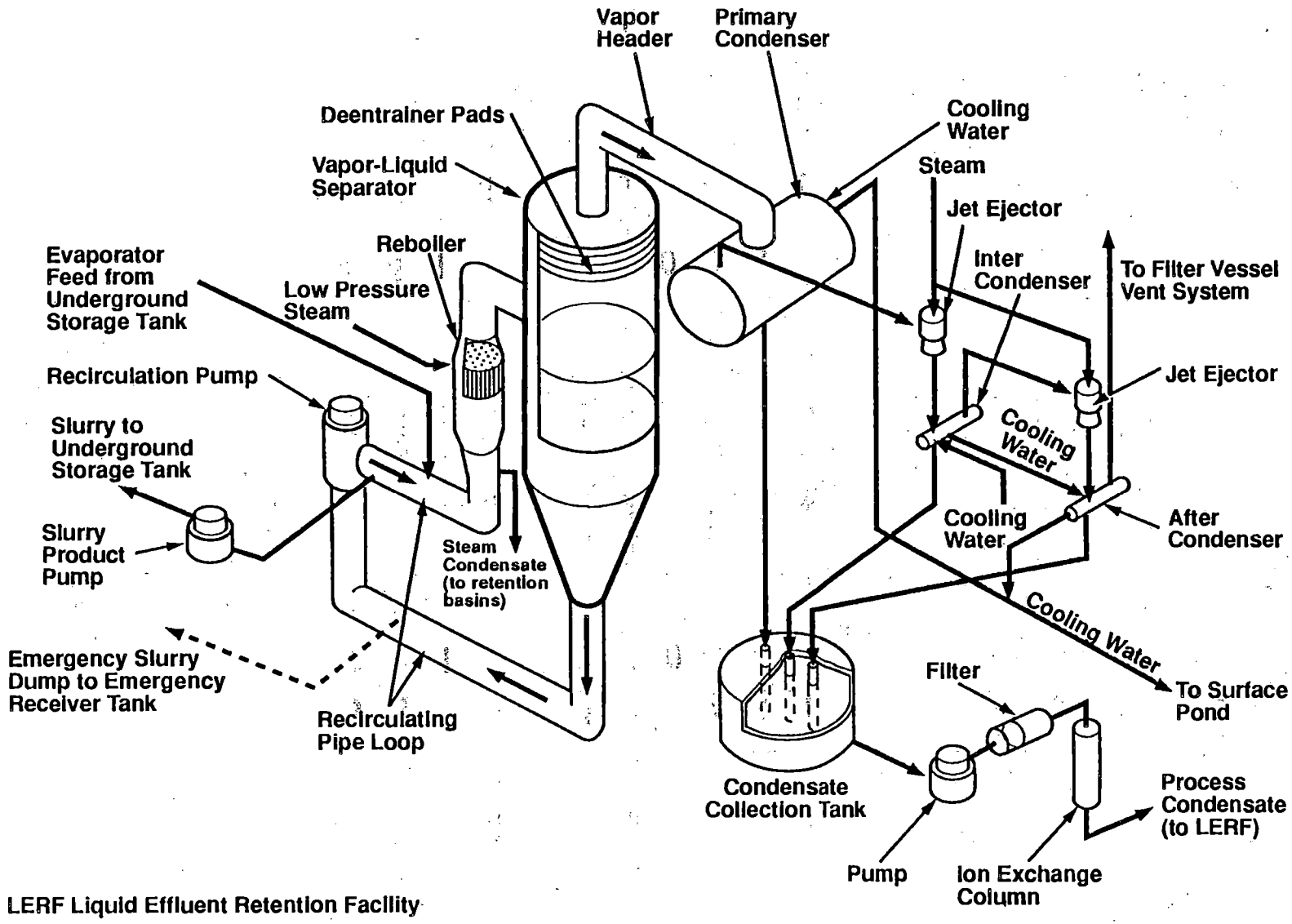

Figure 3-8. Process Flow Diagram for 242-A Evaporator Waste Treatment.

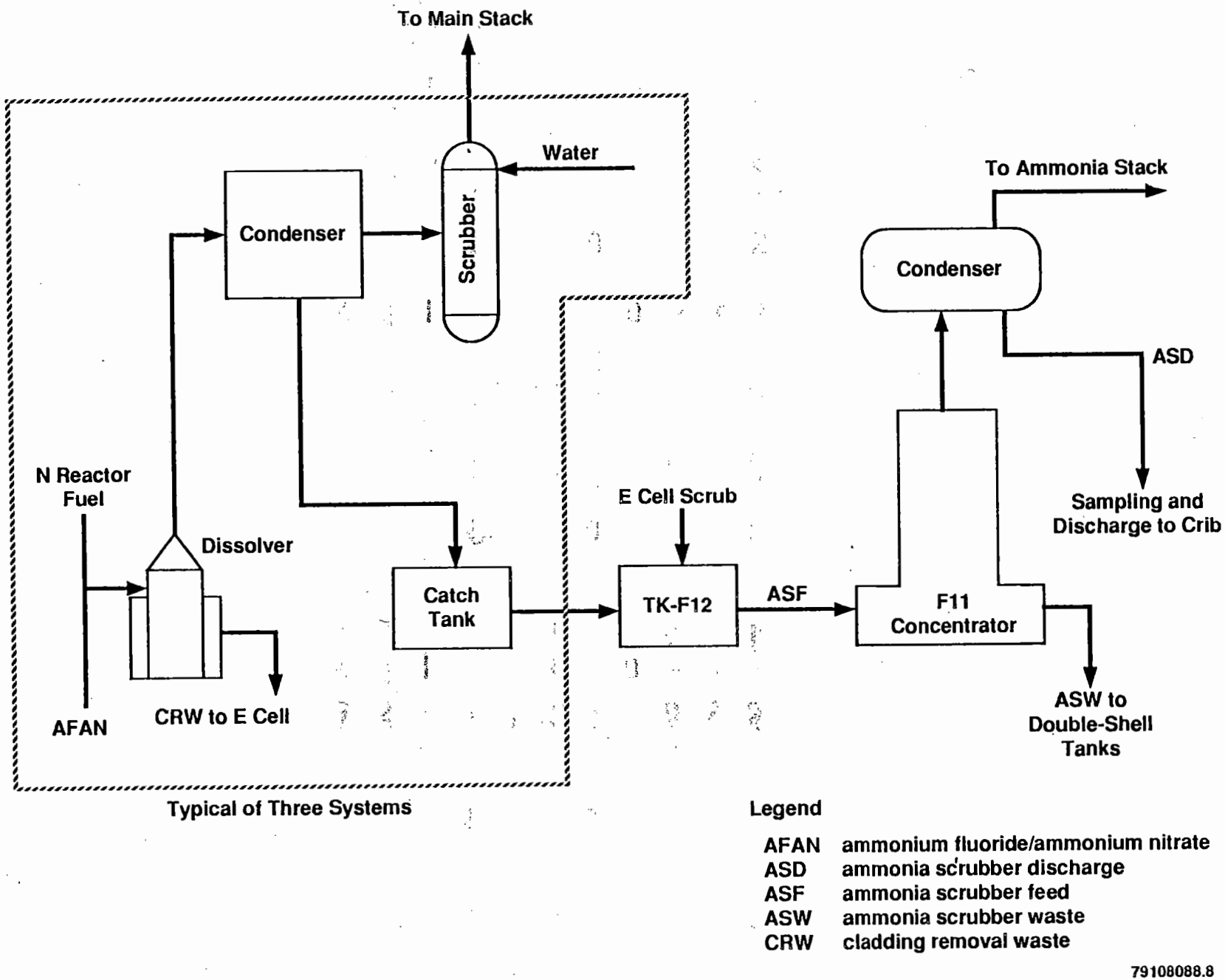

Figure 3-9. Historical Process Flow Diagram for Plutonium-Uranium Extraction Ammonia Scrubber Waste Generation.

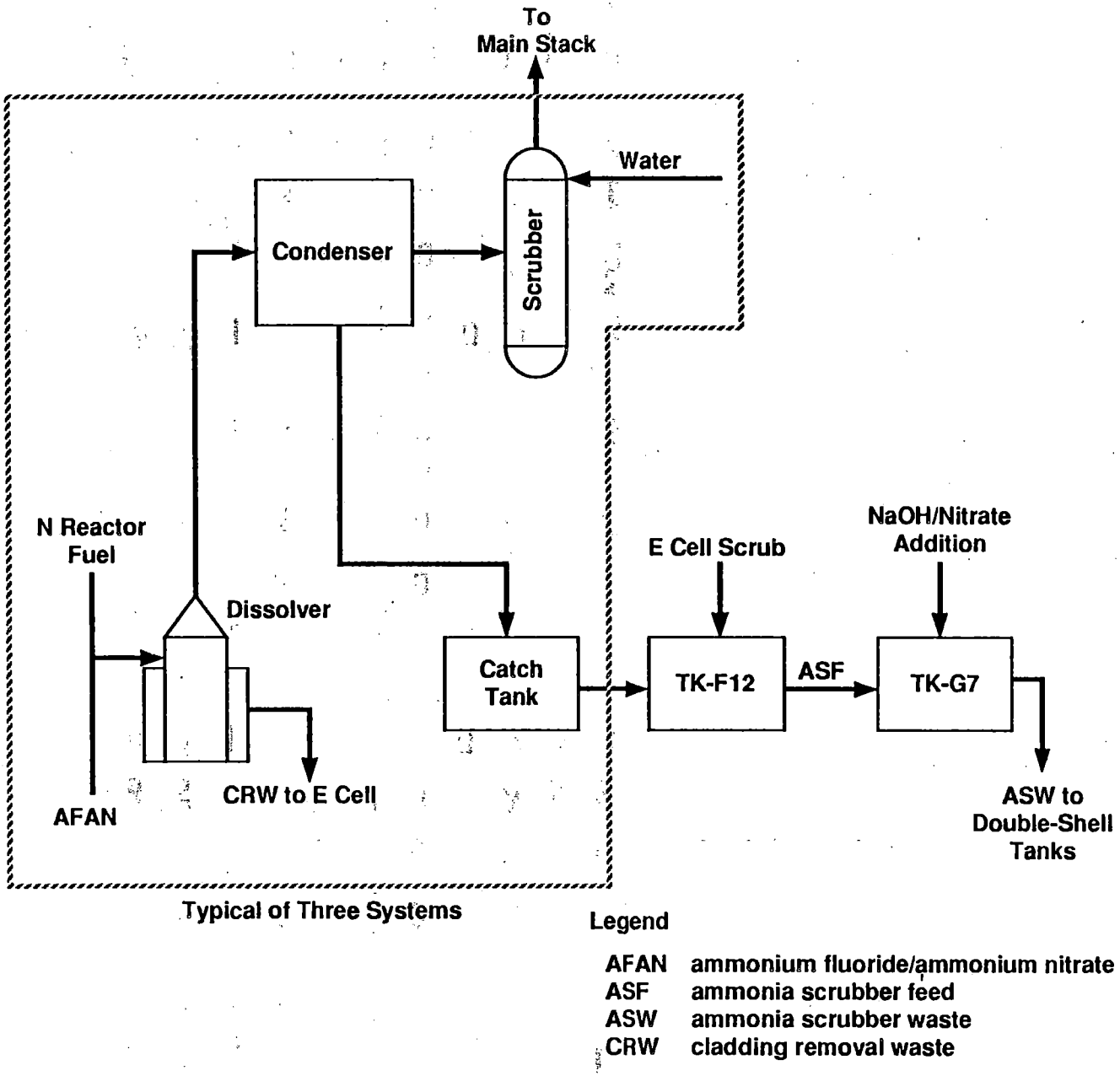

Figure 3-10. Interim Process Flow Diagram for Plutonium-Uranium Extraction Ammonia Scrubber Waste Generation.

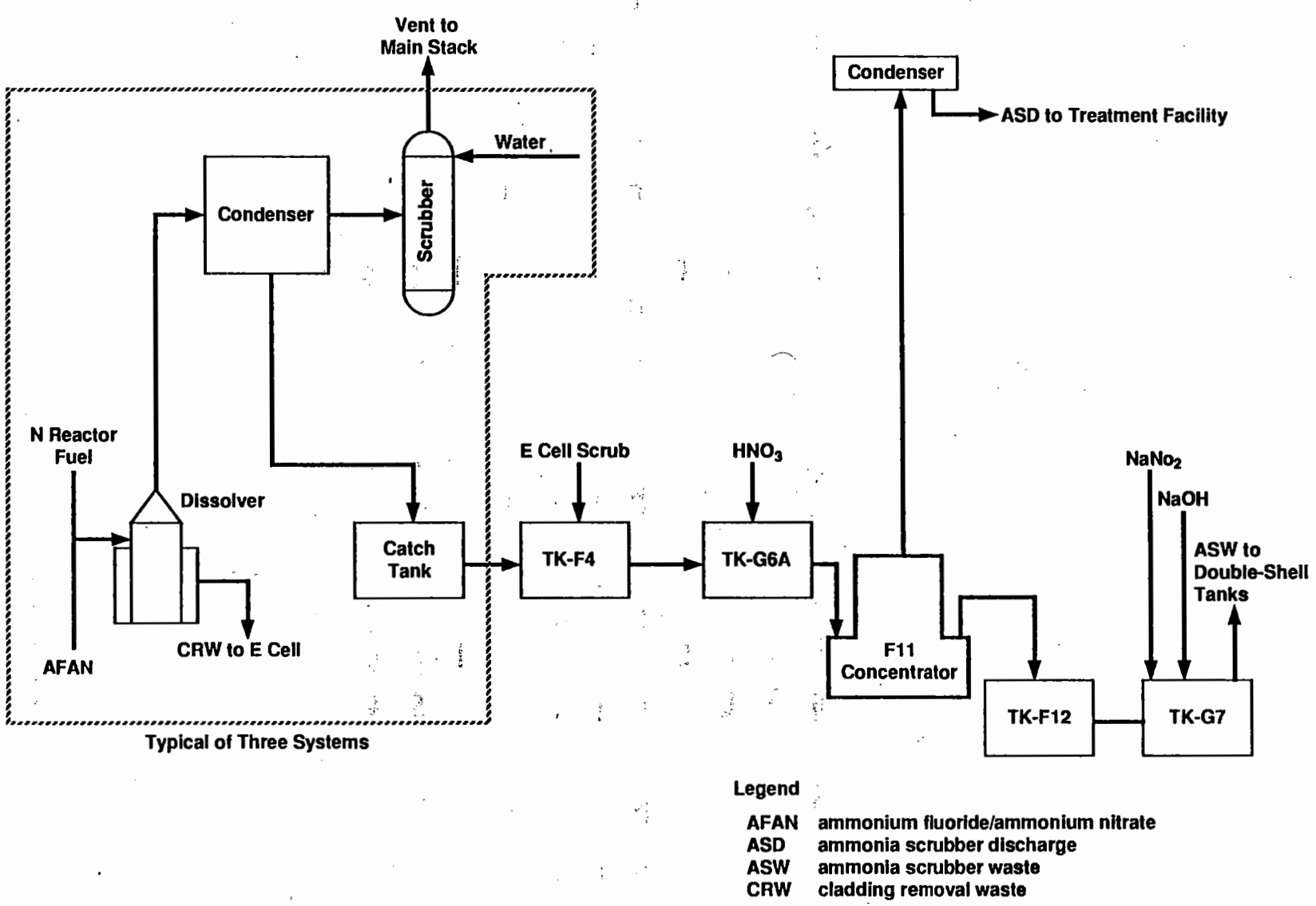

Figure 3-11. Process Flow Diagram for Proposed Plutonium-Uranium Extraction Ammonia Destruction Process.

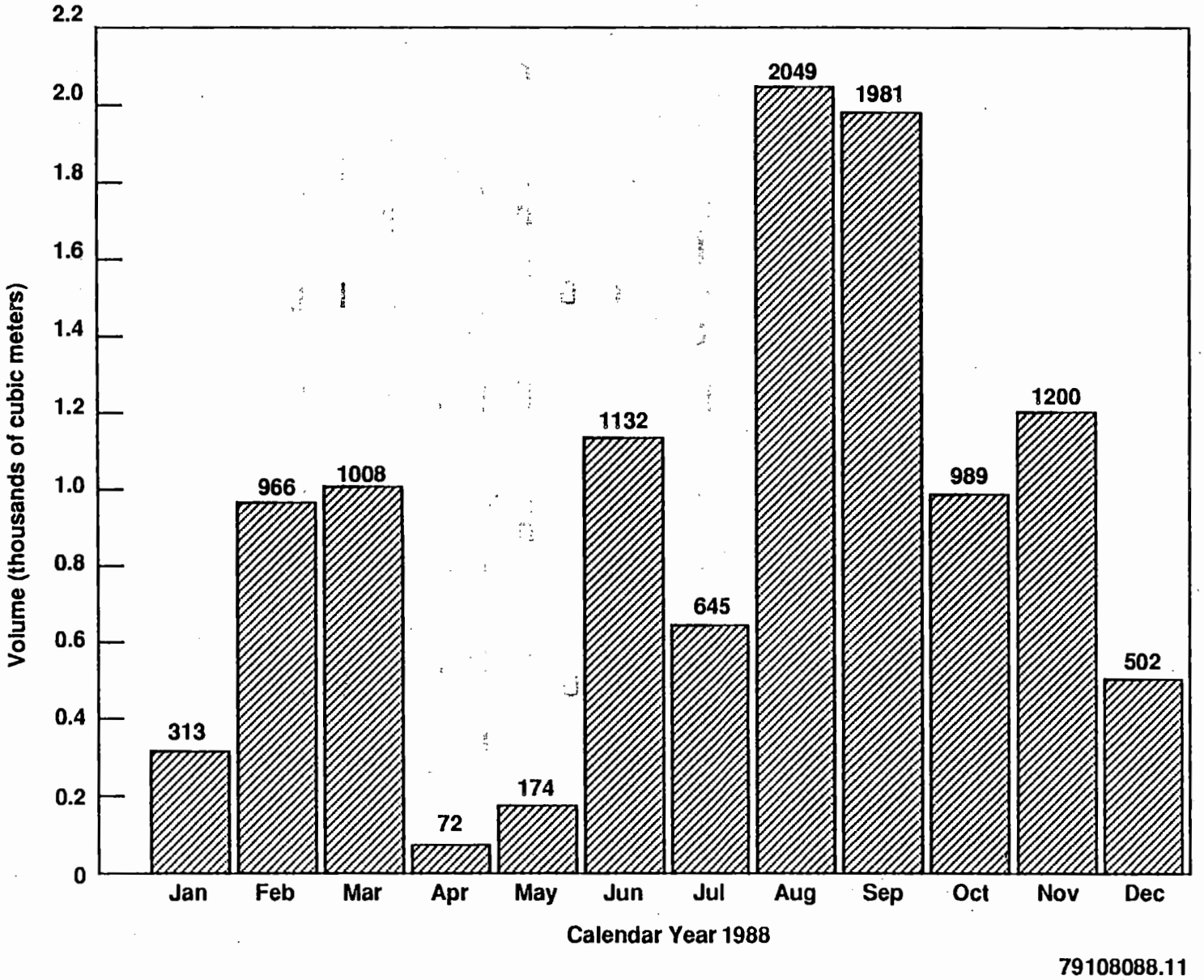

Figure 3-12. Ammonia Scrubber Waste Transfers to Double-Shell Tanks.

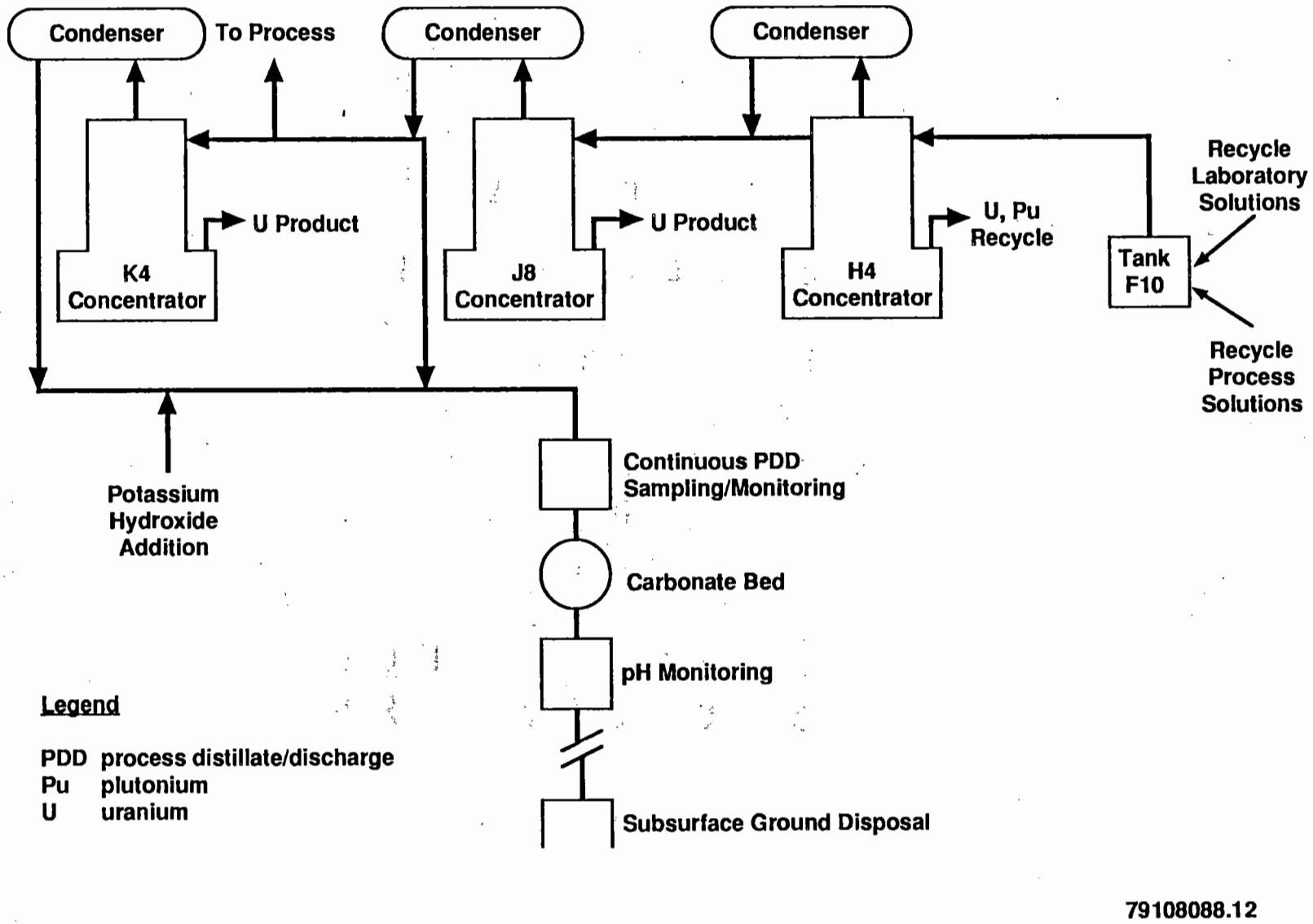

Figure 3-13. Historical Process Flow Diagram for Plutonium-Uranium Extraction Process Condensate.

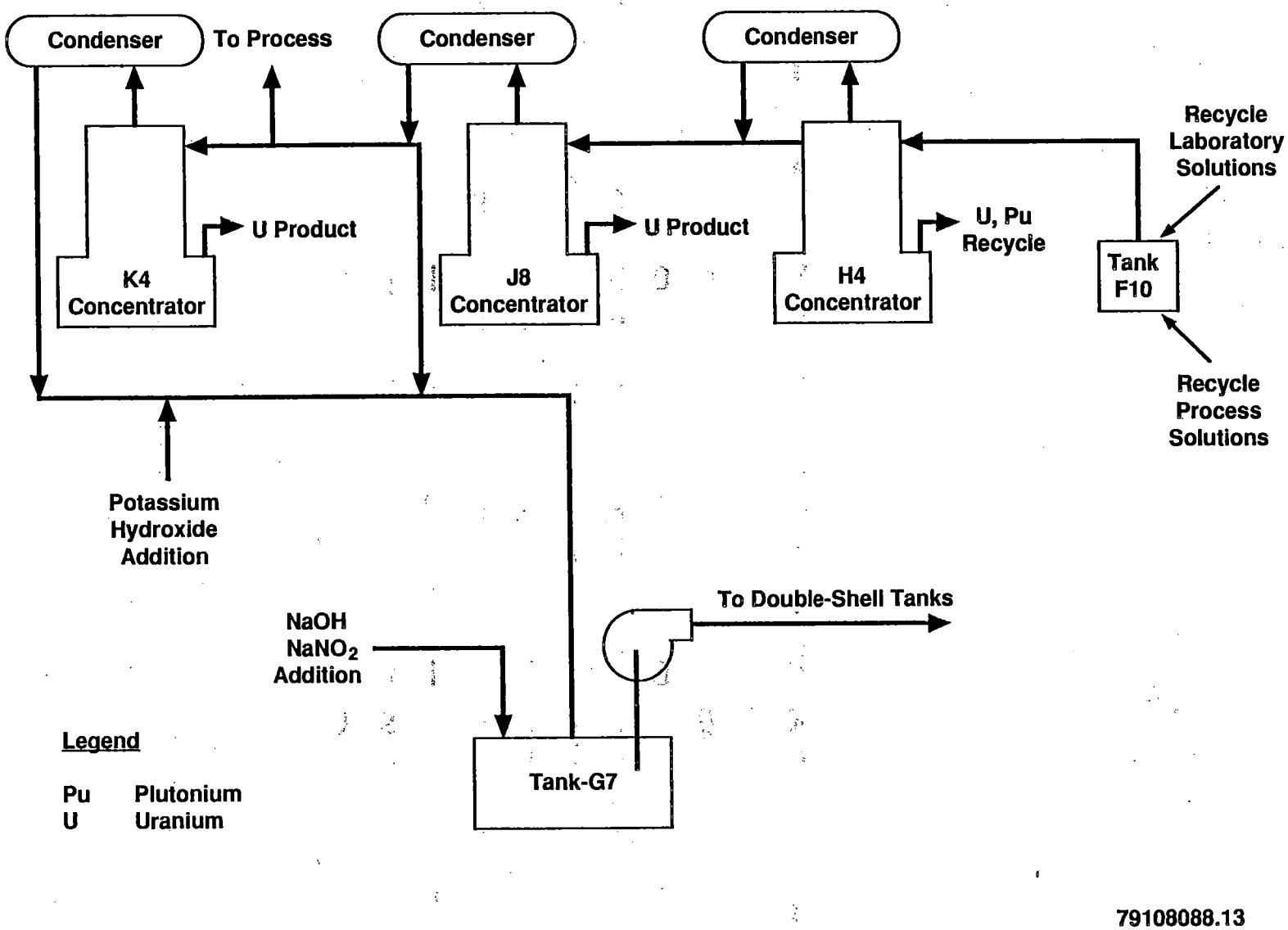

Figure 3-14. Interim Process Flow Diagram for Plutonium-Uranium Extraction Process Condensate.

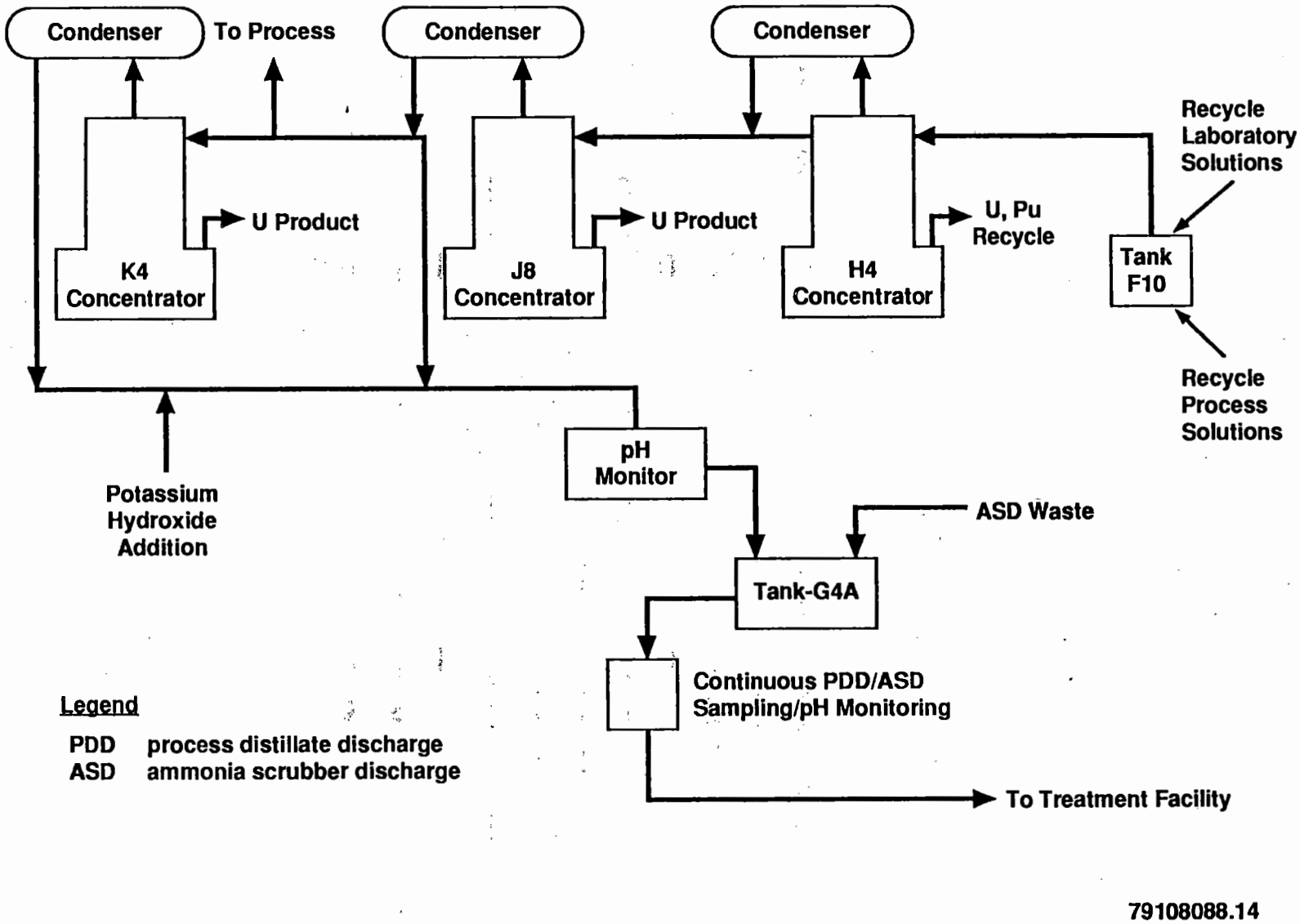

Figure 3-15. Process Flow Diagram for Future Plutonium-Uranium Extraction Process Condensate Generation.

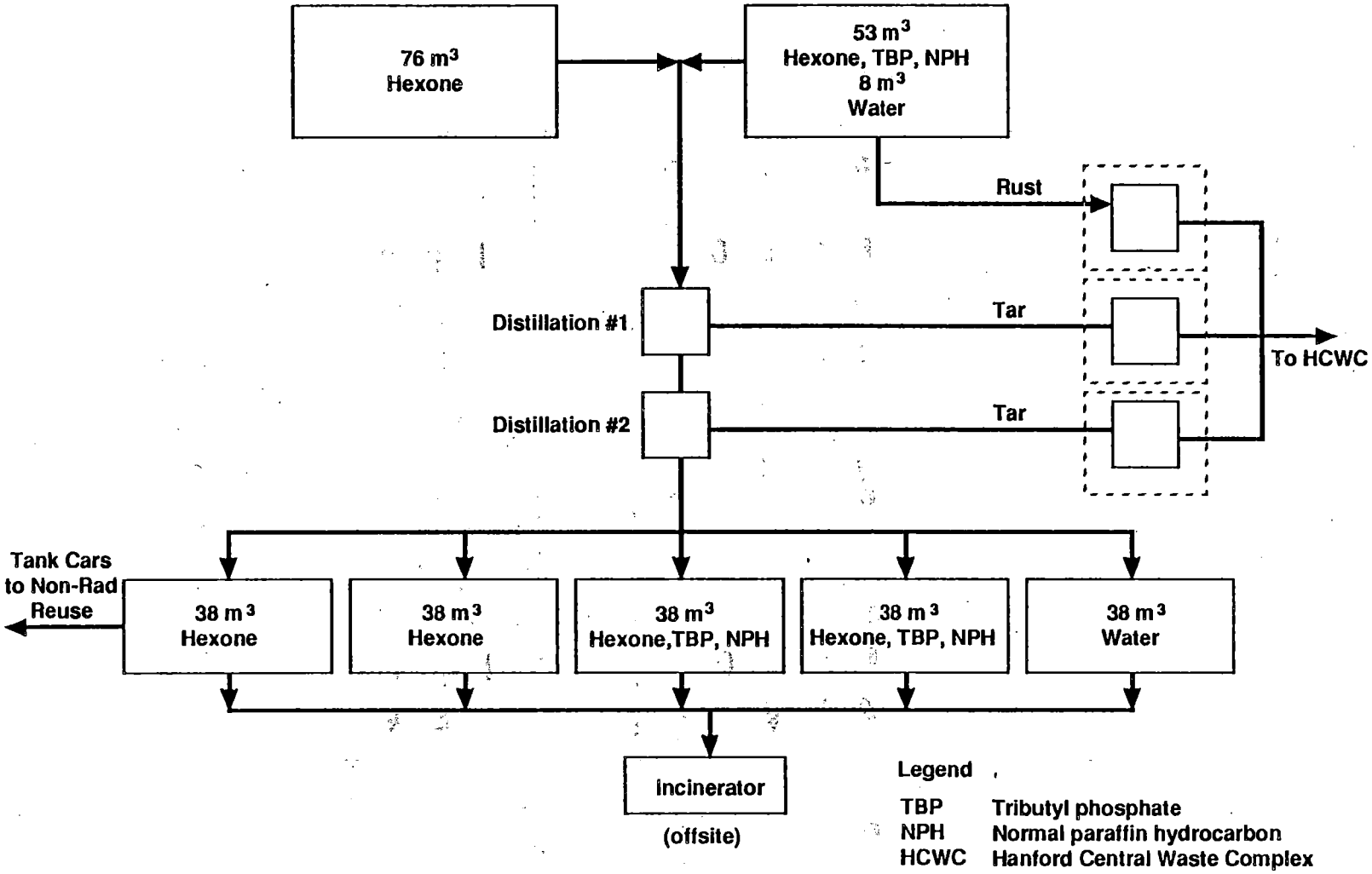

Figure 3-16. Process Flow Diagram for Hexone Waste Processing and Disposal.

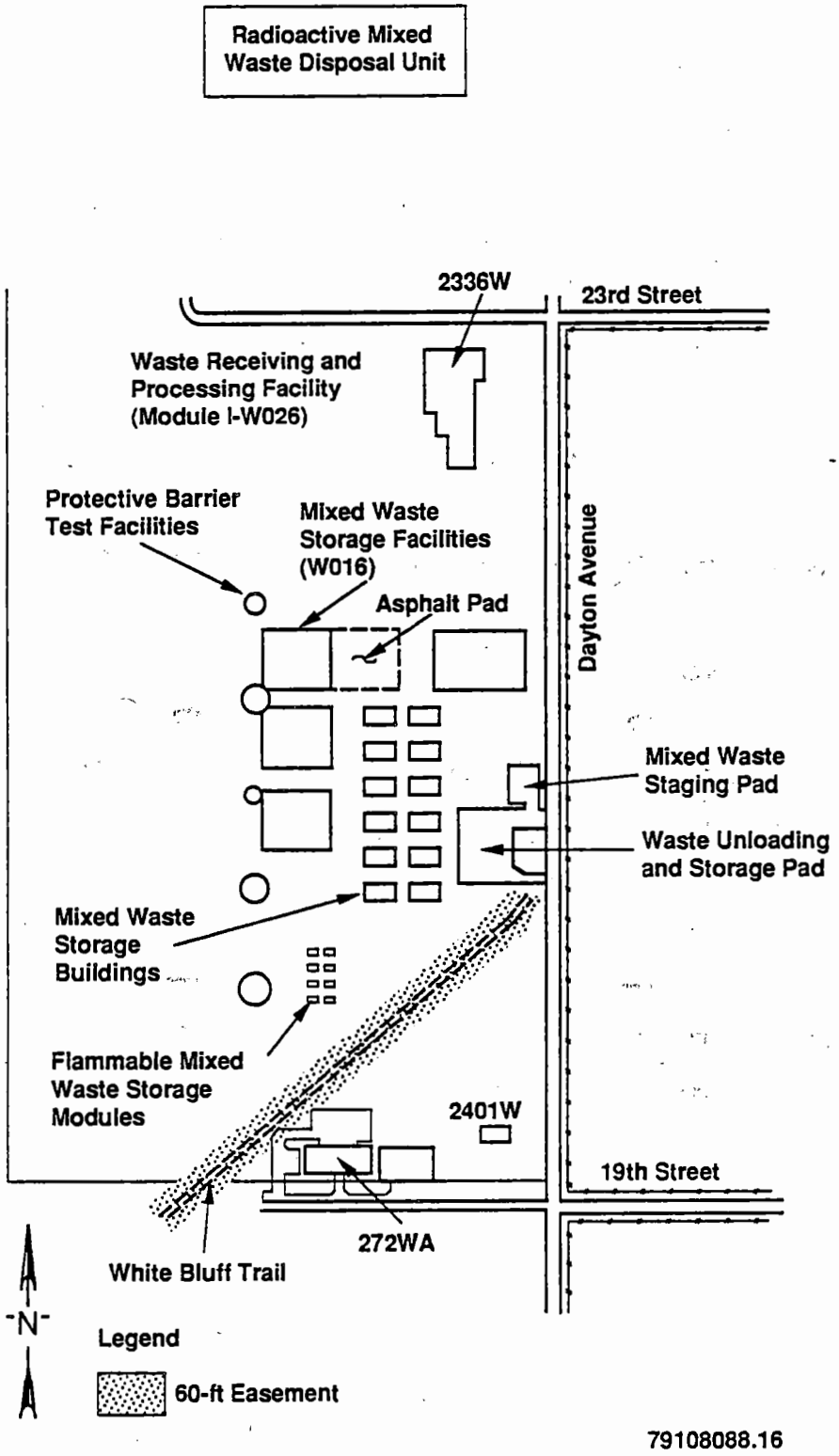

Figure 3-17. Plan View of Hanford Central Waste Complex.

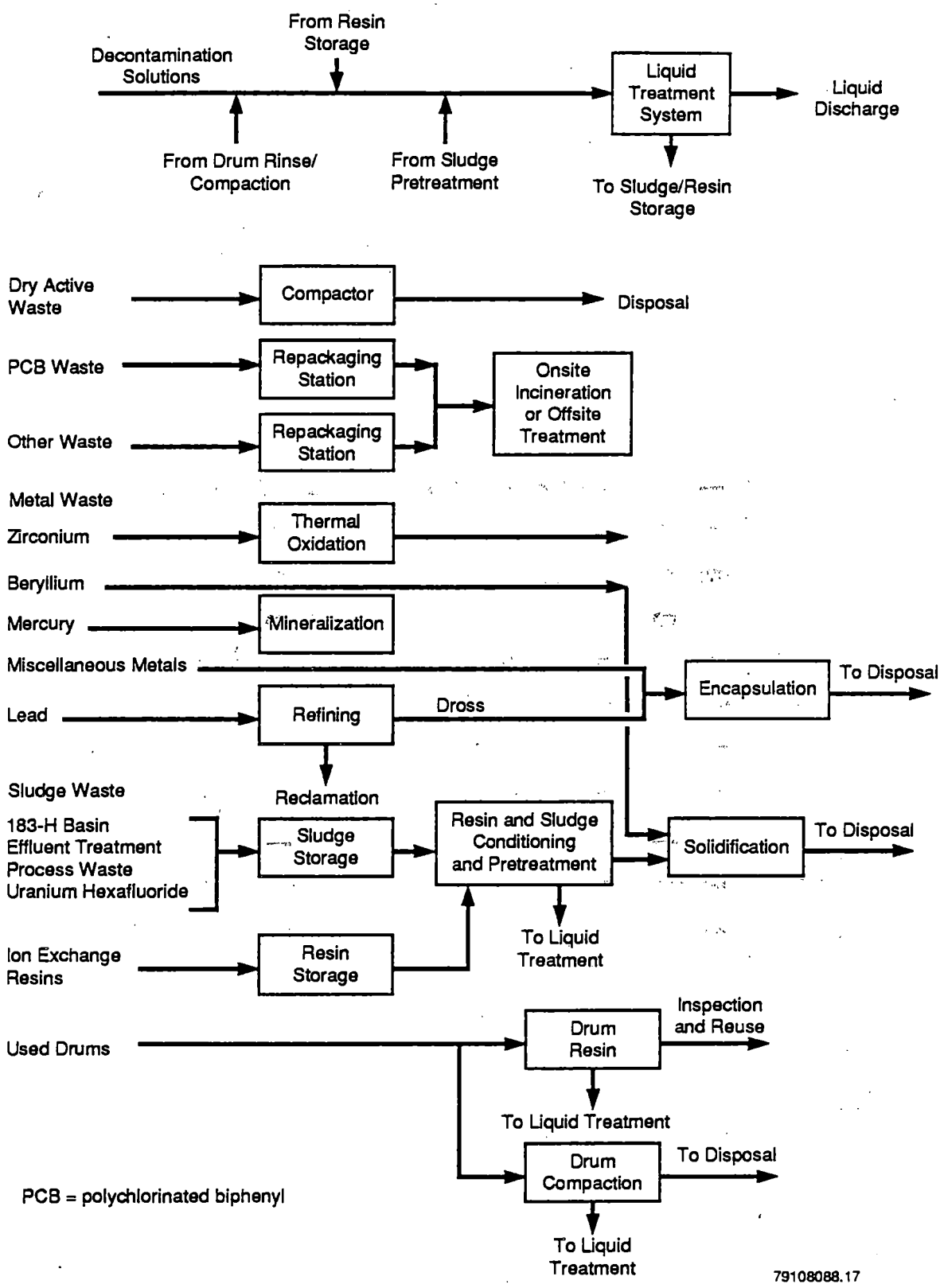

Figure 3-18. Process Flow Diagram for Proposed Waste Receiving and Processing Facility Module 2.

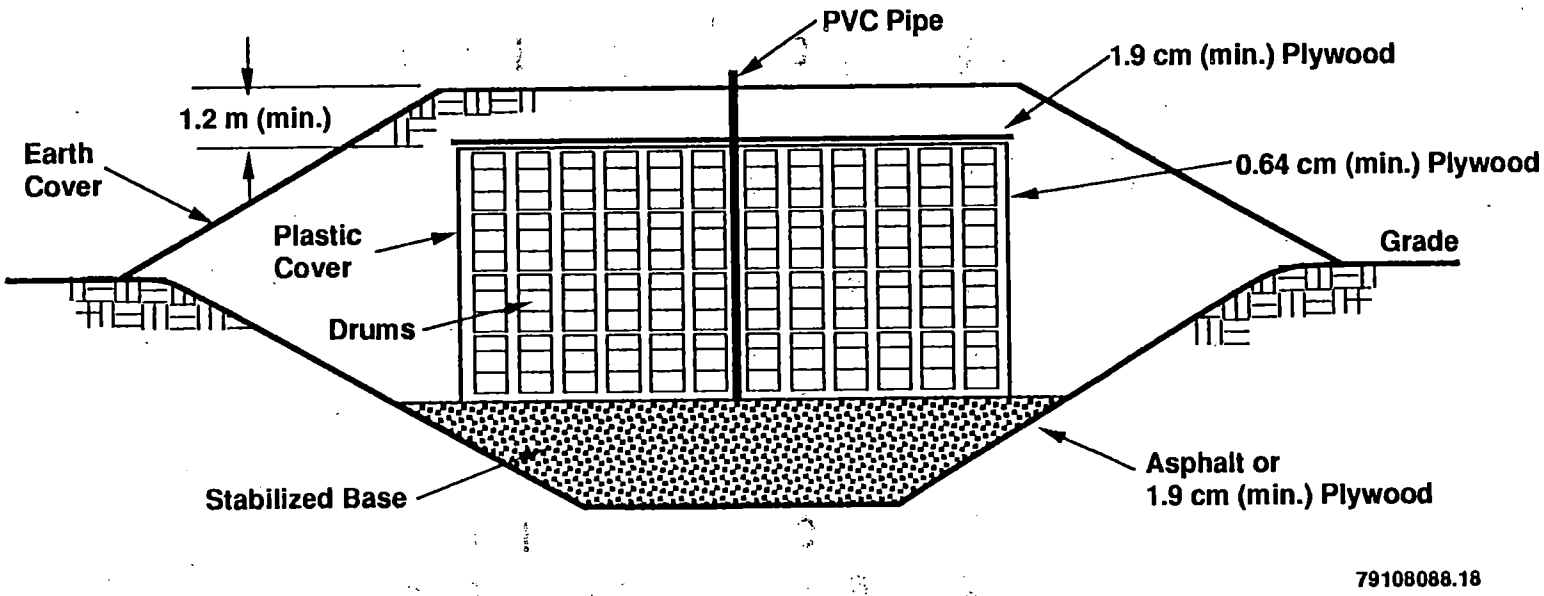

Figure 3-19. Typical Configuration of Retrievable Storage Unit for Contact-Handled Waste.

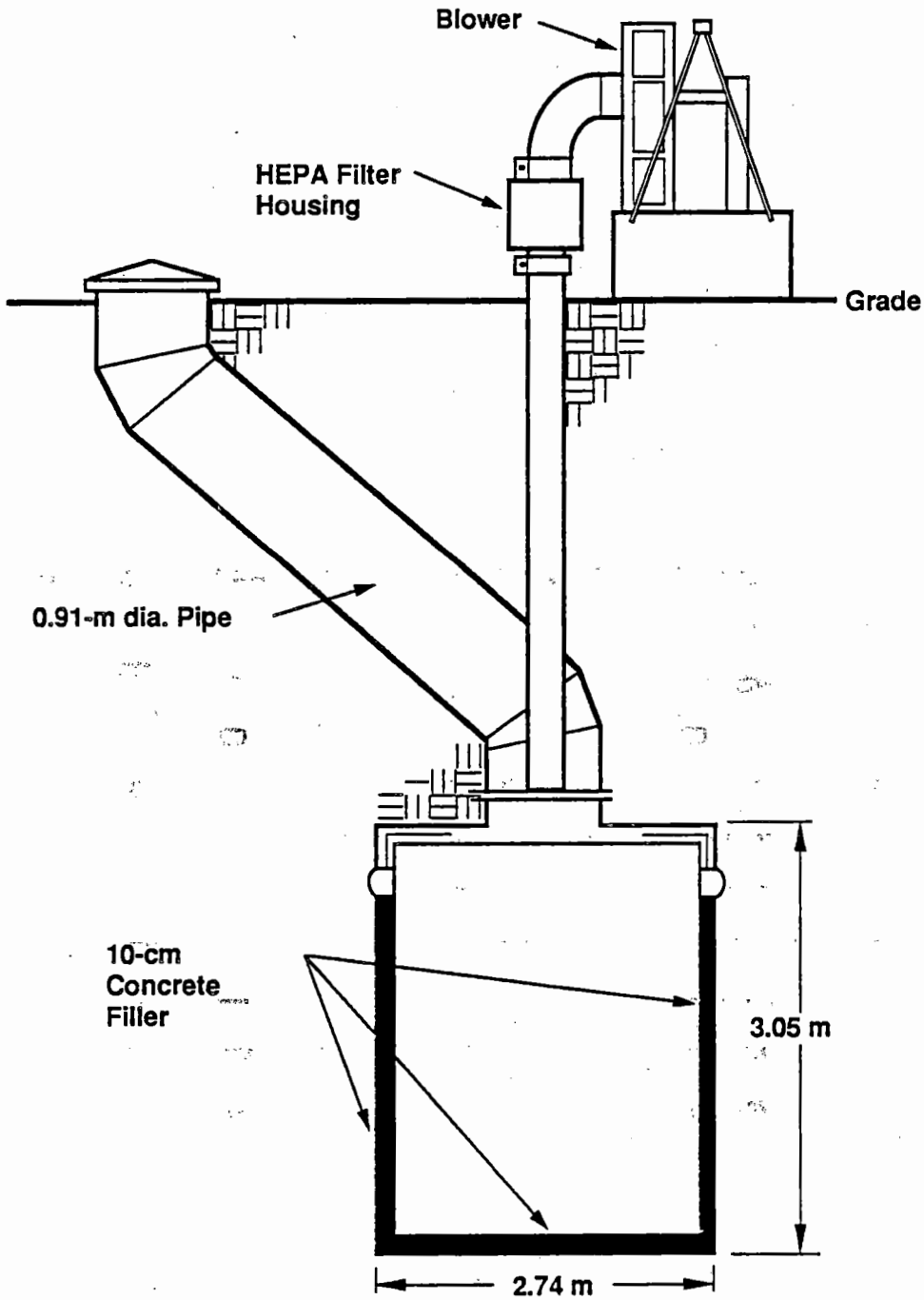

Figure 3-20. Typical Configuration of a Retrievable Storage Unit for Remote-Handled Waste.

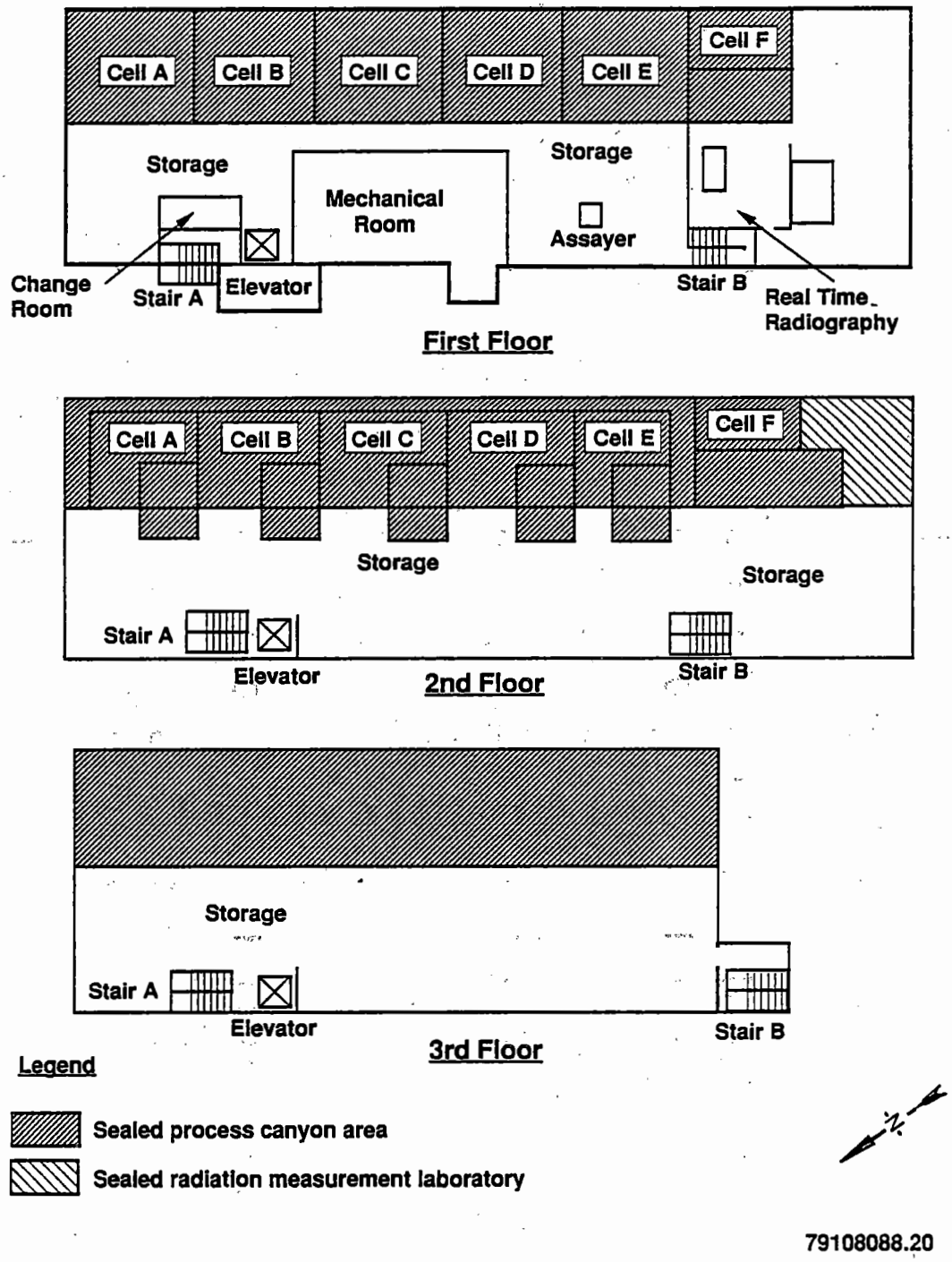

Figure 3-21. Transuranic Storage and Assay Facility Floor Plan.

This page intentionally left blank.

9 2 1 2 6 4 0 0 9 8 5

Table 3-1. Chemical Concentrations in Double-Shell Tank Waste.

Constituent	N*	Average (moles/L)	Minimum (moles/L)	Maximum (Moles/L)
Aluminum	91	7.8 E-01	1.8 E-05	2.9 E+00
Ammonium	31	9.7 E-02	5.0 E-03	4.1 E-01
Barium	12	1.4 E-03	1.8 E-05	5.0 E-03
Boron	22	1.9 E-02	5.8 E-04	1.2 E-01
Cadmium	9	4.1 E-04	5.9 E-05	1.4 E-03
Calcium	40	5.2 E-03	1.9 E-05	1.8 E-02
Carbonate	86	2.4 E-01	1.0 E-03	1.1 E+00
Chloride	74	1.2 E-01	2.6 E-04	9.9 E-01
Chromium	33	1.9 E-02	4.7 E-05	3.2 E-01
Copper	12	2.2 E-04	8.2 E-06	1.2 E-03
Fluoride	56	1.0 E+00	2.5 E-04	1.1 E+01
Hydroxide	97	1.7 E+00	4.6 E-02	6.9 E+00
Iron	21	7.0 E-04	1.0 E-05	3.3 E-02
Lanthanum	11	2.8 E-03	2.1 E-04	1.5 E-02
Lead	3	5.7 E-03	6.0 E-04	1.5 E-02
Magnesium	30	4.3 E-03	1.6 E-06	4.2 E-02
Manganese	15	5.9 E-02	5.7 E-05	8.3 E-01
Molybdenum	11	8.8 E-04	1.1 E-04	2.2 E-03
Mercury	1	1.5 E-04	- - -	- - -
Nickel	22	2.5 E-03	4.2 E-04	8.8 E-03
Nitrate	99	1.5 E+00	2.0 E-03	4.1 E+00
Nitrite	101	9.9 E-01	1.6 E-05	3.6 E+00
Phosphate	77	5.8 E-02	2.0 E-07	3.9 E-01
Phosphorus	19	9.6 E-02	3.9 E-03	3.8 E-01
Potassium	68	2.0 E-01	1.1 E-04	6.9 E-01
Silicon	20	8.0 E-02	4.8 E-04	4.7 E-01
Silver	1	1.8 E-03	- - -	- - -
Sodium	79	5.7 E+00	4.0 E-04	1.6 E+01
Sulfate	48	5.0 E-02	1.5 E-04	8.9 E-01
Zinc	10	5.1 E-04	2.1 E-04	1.2 E-03
Zirconium	16	5.7 E-01	3.4 E-04	1.6 E+00
TOC	91	1.3 E+01	1.5 E-02	8.9 E+01

*N = number of samples in which analyte was found.

Table 3-2. Plutonium-Uranium Extraction Aging Waste Composition.

Constituent	Concentration (moles/L)
Na^+	3.97
OH^-	0.77
AlO_2^-	0.55
$NO_3^- + NO_2^-$	2.02
SO_4^{-2}	0.13
F^-	0.13
$Fe(OH)_3$	0.10
$Cr(OH)_3$	0.009
$Ni(OH)_2$	0.006
Density	1.17-1.20 g/cm^3

9212640098 7

Table 3-3. Sample Analysis for Plutonium-Uranium Extraction Aging Waste Stored in Tanks 241-AZ-101 and 241-AZ-102.

Constituent	N	Average (moles/L)	Minimum (moles/L)	Maximum (moles/L)
Aluminum	18	2.2 E-01	2.0 E-05	4.8 E-01
Barium	2	1.4 E-03	4.0 E-10	2.8 E-03
Boron	2	5.9 E-04	7.1 E-06	1.2 E-03
Cadmium	2	2.9 E-04	9.0 E-09	5.7 E-04
Calcium	9	3.2 E-02	3.2 E-07	2.5 E-01
Carbonate	10	1.6 E-01	6.7 E-04	2.7 E-01
Chloride	4	2.7 E-02	7.0 E-03	6.1 E-02
Chromium	12	6.3 E-03	2.6 E-07	1.3 E-02
Copper	4	1.7 E-04	4.4 E-05	3.5 E-04
Fluoride	8	1.6 E+00	4.6 E-03	1.3 E+01
Hydroxide	12	5.1 E-01	7.1 E-03	1.1 E+00
Iron	4	2.4 E-01	2.4 E-07	6.2 E-01
Lanthanum	1	1.4 E-02	- - -	- - -
Lead	2	3.7 E-03	4.0 E-04	7.0 E-03
Magnesium	6	4.5 E-02	6.9 E-08	2.0 E-01
Molybdenum	3	3.4 E-03	9.0 E-04	1.6 E-03
Nickel	5	1.7 E-02	2.1 E-08	8.0 E-02
Nitrate	14	7.1 E-01	2.5 E-02	1.8 E+00
Nitrite	13	3.3 E-01	3.5 E-03	7.9 E-01
Phosphate	11	1.4 E-01	3.1 E-04	8.7 E-01
Phosphorus	7	2.0 E-01	6.4 E-07	8.2 E-01
Potassium	6	5.4 E-02	3.8 E-06	1.2 E-01
Silicon	4	1.3 E-02	1.7 E-05	5.0 E-02
Silver	1	1.7 E-04	- - -	- - -
Sodium	16	3.4 E+00	2.6 E-04	8.5 E+00
Sulfate	9	9.3 E-02	6.9 E-03	1.6 E-01
Zinc	2	8.5 E-04	7.0 E-09	1.7 E-03
Zirconium	2	1.9 E-01	7.5 E-08	3.7 E-01
TOC	16	1.3 E+01	5.2 E-02	1.0 E+02

9 2 1 2 6 4 0 0 9 8 8

Table 3-4. Estimated Mass of Nonradioactive Chemical Components of Existing Single-Shell Tank Waste after Completion of Jet Pumping.

Chemical	Total bulk sludge (t)	Total bulk salt cake (t)	Interstitial liquid (t)
Inert chemicals			
$NaNO_3$	20,000	110,000	2,500
$NaNO_2$	3,000	2,300	1,900
Na_2CO_3	1,700	730	70
NaOH	4,200	2,000	740
$NaAlO_2$	950	1,900	1,500
Na_3PO_4	12,500	2,100	280
Cancrinite*	2,700	- - -	- - -
$Al(OH)_3$	2,300	- - -	- - -
$CE(OH)_3$	320	- - -	- - -
$Cr(OH)_3$	190	- - -	- - -
$Cd(OH)_2$	5	- - -	- - -
$Fe(OH)_3$	1,200	- - -	- - -
$Sr(OH)_2$	50	- - -	- - -
$BiPO_4$	380	- - -	- - -
$CaCO_3$	320	- - -	- - -
F^-	800	- - -	- - -
Cl^-	40	- - -	- - -
Hg^+	0.9	- - -	- - -
MnO_2	190	- - -	- - -
$Ni_2Fe(CN)_6$	500	- - -	- - -
$P_2O_5 \bullet 2H_2O \bullet 44H_2O$	20	- - -	- - -
$ZrO_2 \bullet 2H_2O$	430	- - -	- - -
Organic Carbon	- - -	- - -	200
H_2O	26,000	14,000	4,800
Totals	77,796	133,030	11,990

NOTE: This table is from RHO-RE-ST-30P, page 2-11.
(t) = Metric tonnes.
*Known silica additions are assumed to have reacted with aluminates and hydroxides to form cancrinite (assumed to be $2NaAlSiO_4 \bullet 0.52NaNO_3 \bullet 0.68H_2O$).

9 2 1 2 6 4 0 0 9 8 9

Table 3-5. Hanford Site Single-Shell Tank Releases.* (sheet 1 of 3)

Tank	Volume (m^3)	Leak Reported
241-A-103	21	1987
241-A-104	9.5	1975
241-A-105	19	1963
241-AX-102	11	1988
241-B-107	30	1980
241-B-110	38	1981
241-B-201	4.5	1980
241-B-203	1.1	1983
241-BX-102	265	1971
241-BX-108	9.5	1974
241-BY-103	<19	1973
241-BY-108	<19	1972
241-C-101	76	1980
241-C-2012	2.1	1988
241-C-202	1.7	1988
241-C-203	1.5	1984
241-C-204	1.3	1988
241-SX-104	23	1988
241-SX-107	19	1964
241-SX-108	9.1	1962
241-SX-109	19	1965
241-SX-110	21	1976
241-SX-111	7.6	1974
241-SX-112	114	1969
241-SX-113	57	1962
241-SX-115	189	1965
241-T-106	436	1973
241-T-108	<3.8	1974
241-T-111	<3.8	1984

9 2 1 2 6 4 0 0 9 9 0

Table 3-5. Hanford Site Single-Shell Tank Releases.* (sheet 2 of 3)

Tank	Volume (m^3)	Leak Reported
241-TY-107	9.5	1984
241-TY-101	<3.8	1973
241-TY-103	11	1973
241-TY-104	5.3	1981
241-TY-105	133	1960
241-TY-106	76	1959
241-U-101	114	1959
241-U-104	208	1961
241-U-110	31	1975
241-U-112	32	1980
241-B-204	1.5	1984
241-BY-107	57	1984
241-C-111	21	1968
241-S-104	91	1968
241-T-103	<3.8	1974
241-T-109	<3.8	1974
241-B-112	7.6	1978
241-C-110	7.6	1984
241-AX-104**		1977
241-B-101**		1974
241-B-103**		1978
241-B-105**		1978
241-B-111**		1978
241-BX-101**		1972
241-BX-110**		1976
241-BX-111**		1984
241-BY-105**		1984
241-BY-106**		1984
241-SX-114**		1972

9212640099 1

Table 3-5. Hanford Site Single-Shell Tank Releases.* (sheet 3 of 3)

Tank	Volume (m^3)	Leak Reported
241-T-107**		1984
241-TX-105**		1977
241-TX-110**		1977
241-TX-113**		1974
241-TX-114**		1974
241-TX-115**		1977
241-TX-116**		1977
241-TX-117**		1977
Total estimated leakage volume from 66 tanks: 2,840 m^3.		

*After some tanks were declared to be leaking, cooling water may have been added to aid evaporative cooling. It is believed that some of this water did not evaporate and therefore went into the ground. As of October 1990, estimates ranged from 190 to 3,000 m^3. The past practice was to exclude the cooling water from the leak volume estimate. The volumes provided and date of initial release are the subject of continued evaluation and refinement and may be revised for improved accuracy as a result of these evaluations. In addition, documents show that from 1946 to 1966, 456,725 m^3 (120,661,000 gallons) of liquid wastes were intentionally discharged from SSTs at the Hanford Site directly to the ground on the 200 Area plateau (WHC 1990m). The majority of this waste was discharged from 1946 to 1958 as a result of the early plutonium and uranium recovery processes conducted in the 221-B Facility (B Plant), 221-T Facility (T Plant), and the 221-U Facility (U Plant). In addition, from 1960 to 1966 laboratory wastes from the 300 Area and equipment decontamination wastes from the 200 West Area were routed through SSTs before discharge to the ground. No wastes have been discharged intentionally to the ground from SSTs since 1966, and no wastes have ever been discharged directly to the ground from the newer DSTs located at the Hanford Site.

**Individual release volumes for these tanks have not been determined. The total volume release from these tanks is estimated to be 570 m^3.

SST = single-shell tank.

Table 3-6. Analytes Detected in 242-A Evaporator Process Condensate.
(sheet 1 of 3)

Analyte	Number of samples containing analyte	Average concentration (ppb)
Total organic carbon	31	2.6 E+04
INORGANIC CATIONS		
Aluminum	29	8.4 E+02
Ammonium	31	4.1 E+05
Barium	4	6.8 E+00
Boron	1	1.3 E+01
Cadmium	1	5.0 E+00
Calcium	31	2.7 E+03
Copper	5	2.6 E+01
Iron	9	6.3 E+01
Magnesium	14	5.0 E+02
Manganese	1	5.0 E+00
Mercury	24	3.0 E-01
Nickel	5	1.4 E+01
Potassium	30	2.6 E+03
Silicon	4	6.8 E+03
Sodium	25	3.3 E+03
Vanadium	4	6.3 E+00
Zinc	15	1.3 E+01
INORGANIC ANIONS		
Chloride	7	1.0 E+03
Fluoride (ion chromatogram)	1	2.1 E+03
Fluoride (ion-specific electrode)	7	4.0 E+01
Nitrate	4	2.8 E+03
Sulfate	17	2.6 E+03
Sulfide	2	3.6 E+04

9 2 1 2 6 4 0 0 9 9 3

Table 3-6. Analytes Detected in 242-A Evaporator Process Condensate.
(sheet 2 of 3)

Analyte	Number of samples containing analyte	Average concentration (ppb)
ACIDS		
Caproic acid	1	7.0 E+01
PARAFINS		
2-Methylnonane	2	1.6 E+01
Dodecane	2	4.3 E+01
Heptadecane	1	1.8 E+01
Hexadecane	1	1.7 E+01
Pentadecane	1	2.0 E+01
Tetradecane	23	7.6 E+01
Tridecane	23	7.0 E+01
ALCOHOLS		
2-Propanol	10	2.2 E+01
Butyl alcohol	30	9.8 E+03
Ethyl alcohol	1	2.0 E+00
ALDEHYDES		
Butylaldehyde	14	5.6 E+01
KETONES		
Acetone	36	9.8 E+02
Methyl ethyl ketone	25	5.1 E+01
Methyl n-butyl ketone	16	1.3 E+01
Methyl n-propyl ketone	8	9.3 E+00
Hexone	10	1.1 E+01
CYCLICS		
Benzaldehyde	1	2.3 E+01
Benzyl alcohol	9	1.3 E+01
Phenol	1	3.3 E+01
Tetrahydrofuran	24	3.7 E+01
ESTERS		
Tributyl phosphate	31	3.9 E+03

9 2 1 2 6 4 0 0 9 9 4

Table 3-6. Analytes Detected in 242-A Evaporator Process Condensate.
(sheet 3 of 3)

Analyte	Number of samples containing analyte	Average concentration (ppb)
NITROGEN-CONTAINING ORGANICS		
3,5-Dimethylpridine	3	2.1 E+01
Dimethylnitrosamine	1	5.7 E+01
Pyridine	1	5.5 E+02
ETHERS AND GLYCOLS		
2-Butoxyethanol	25	3.8 E+02
Butoxydiglycol	2	1.9 E+01
Butoxyglycol	21	2.8 E+02
Butoxytriethylene glycol	1	3.5 E+01
Ethoxytriethylene glycol	4	9.9 E+01
Methoxydiglycol	2	4.0 E+01
Methoxytriglycol	2	2.2 E+02
Triglyme	1	9.0 E+01
RADIONUCLIDES		
Strontium	4	1.6 E+01
Uranium	21	4.4 E-01

9 2 1 2 6 4 0 0 9 9 5

Table 3-7. Analytes Reported in Plutonium-Uranium Extraction Plant Ammonia Scrubber Discharge.

Constituent	N[a]	Average concentration[b]
Calcium	4	6.80 E+01
Chloride	4	1.17 E+03
Chromium	4	1.06 E+01
Magnesium	1	2.10 E+01
Nickel	4	1.02 E+01
Nitrate	4	5.50 E+02
Sodium	4	2.79 E+02
Uranium	4	3.91 E-01
Zinc	4	3.50 E+01
Ammonia	4	3.66 E+05
1-Butanol	1	1.20 E+01
Alpha Activity (pCi/L)	4	3.01 E+01
Beta Activity (pCi/L)	4	3.99 E+04
Conductivity (μS)	4	1.79 E+02
pH (dimensionless)	4	9.35 E+00
Temperature (°C)	4	3.24 E+01
TOC	4	2.16 E+03

[a]N is the number of samples in which the analyte was detected. The average concentrations do not reflect less than values. It is the sum of the detected values divided by N.

[b]Units are parts per billion unless otherwise stated.

TOC = total organic hydrocarbon.

9 2 1 2 6 4 0 0 9 9 6

Table 3-8. Analyses for Plutonium-Uranium Extraction Plant Ammonia Scrubber Feed Stored in Double-Shell Tanks.

Analyte	Average Concentration
Sodium nitrite	0.04 M
Ammonium hydroxide	0.09 M
Fluoride	2.6×10^{-4} M
Hydroxide ion	0.02 M
pH	>12.5
Total alpha	0.11 μCi/l

9 2 1 2 6 4 0 0 9 9 7

Table 3-9. Analytes Reported in the Plutonium-Uranium Extraction Plant Process Condensate. (sheet 1 of 2)

Constituent	N*	Average concentration (ppb)
Boron	5	1.64 E+01
Calcium	5	5.02 E+01
Cyanide	5	3.57 E+01
Fluoride	5	8.60 E+02
Mercury	5	9.66 E-01
Nitrate	5	5.56 E+04
Nitrite	5	4.93 E+04
Potassium	5	5.08 E+02
Silicon	5	2.19 E+02
Sodium	5	1.29 E+04
Acetone	4	5.75 E+01
Ammonia	5	5.32 E+01
1-Butanol	3	1.90 E+01
2-Butanone	4	2.85 E+01
Butylated hydroxy toluene	1	1.00 E+02
Dibutylphosphate	4	1.74 E+04
Dodecane	7	9.14 E+03
Tetradecane	8	2.10 E+04
Tetrahydrofuran	4	7.45 E+01
Tributylphosphate	8	7.78 E+04
Tridecane	8	3.28 E+04
Undecane	1	1.20 E+02
Unknown aliphatic HC	2	1.19 E+03
Unknown ester	4	5.24 E+02
Unknown ester	3	3.07 E+01
Unknown hydrocarbon	2	1.55 E+04
Alpha Activity (pCi/L)	5	2.25 E+01
Beta Activity (pCi/L)	5	7.89 E+00
Conductivity (μS)	4	5.08 E+02

9 2 1 2 6 4 0 0 9 9 8

Table 3-9. Analytes Reported in the Plutonium-Uranium Extraction Plant Process Condensate. (sheet 2 of 2)

Constituent	N*	Average concentration (ppb)
Ignitability (°F)	5	2.08 E+02
pH (dimensionless)	4	3.04 E+00
Temperature (°C)	3	4.66 E+01
TOC	5	1.06 E+05
TOX (as Cl)	5	4.80 E+01

*N is the number of samples in which the analyte was detected. The average concentrations do not reflect less than values.

TOC = total organic hydrocarbon
TOX = total organic halide.

9212640099

Table 3-10. Analyses of Hexone Waste (before distillation in 1990).

Compound	Concentration, Weight Percent		
	Tank 276-S-141	Tank 276-S-142	
		Organic Phase	Aqueous Phase
Hexone	99.0	65.2	1.0
N-alkanes (nC_{10} - nC_{15})	ND	14.2	ND
N-tributyl phosphate	ND	8.4	ND
Water	1.0	1.0	99.0
Mono- and di-butyl phosphates, and n-alkanes out of the C_{10} - C_{15} range	ND	12.2	ND
Total	100.0	100.0	100.0

ND = not detected.

9 2 1 2 6 4 0 1 0 0 0

Table 3-11. Routine Wastes Discharged to 183-H Solar Basins.

Constituent	Amount
Uranium	1,988 kg
Chromium	744 kg
Manganese	1,411 kg
Copper	197,948 kg
Nitrate ion	1,371,291 kg
Sulfate ion	341,646 kg
Ammonium ion	1,760 kg
Fluoride ion	88,360 kg
Average pH	9.8

(Total volume = 9,623 m^3)

9 2 1 2 6 4 0 1 0 0 1

Table 3-12. Plutonium-Uranium Extraction Plant Storage Tunnels #1 and #2 Waste (Lead and Silver) Generation.

Date	Amount		Tunnel
	Lead	Silver	
6/60	113 kg	- - -	1
12/60	113 kg	- - -	1
12/71	- - -	625 kg	2
11/87	2540 kg	- - -	2
5/88	230 kg	114 kg	2
Total	2996 kg	739 kg	
	(0.26 m^3)	(0.17 m^3)	

9 2 1 2 6 4 0 1 0 0 2

Table 3-13. Projected Generation of Hanford Central Waste Complex Stored Low-level and Transuranic Waste.

Year	Total (cubic meters)
1991	1127
1992	467
1993	535
1994	323
1995	3144
1996	3144
1997	3144
1998	3144
1999	4533
2000	4533
2001	4533
2002	4533
2003	3116
2004	3088
2005	3031
2006	3031
2007	2720
2008	2691
2009	2691
2010	2408

9 2 1 2 6 4 0 1 0 0 3

Table 3-14. Quantities and Designation of Low-Level Waste Currently in Storage at the Hanford Central Waste Complex.

Waste code	Classification	Wastes with only a single code (cubic meters)	Wastes exhibiting multiple codes (cubic meters)
D001	Ignitable	0.57	1129
D002	Corrosive	1.47	22
D003	Reactive	- - -	1.51
D004	TCLP-As	- - -	1.31
D005	TCLP-Ba	- - -	32
D006	TCLP-Cd	2.10	19
D007	TCLP-Cr	- - -	565
D008	TCLP-Pb	6.97	175
D009	TCLP-Hg	- - -	21.5
D010	TCLP-Se	3.57	18
D011	TCLP-Ag	- - -	4.0
D012	TCLP-Endrin	- - -	1.05
F001	Spent halogenated solvents	62	46
F002	Spent halogenated solvents	- - -	13.9
F003	Spent non-halogenated solvents	100.10	22.3
F004	Cresols	- - -	14.5
F005	Spent non-halogenated solvents	- - -	31.4
WC01	Carcinogenic dangerous waste	1.89	20.7
WC02	Carcinogenic dangerous waste	30.41	32.7
WP01	Persistent dangerous waste	0.42	44.2
WP02	Persistent dangerous waste	6.96	527
WT01	Toxic dangerous waste	13.83	1168
WT02	Toxic dangerous waste	20.20	1445
P029	Copper cyanide	- - -	1445
P030	Cyanides	- - -	1445
P098	Potassium cyanide	- - -	1445
P106	Sodium cyanide	- - -	1445
P120	Vanadium pentoxide	- - -	
U080	Dichloromethane	- - -	0.21
U123	Formic acid	- - -	1445
U161	Methylisobutylketone	- - -	0.21
- - -	PCBs	- - -	1.89
	Total: 1,969[a] cubic meters		

[a]If a container held multiple hazardous constituents, the volume of the container was assigned to each constituent; therefore, the volumes listed in the second column cannot be summed to obtain total volume.

PCBs = Polychlorinated biphenyls
TCLP = Toxic characteristic leach procedure.

9 2 1 2 6 4 0 1 0 0 4

Table 3-15. Quantities and Designation of Transuranic Waste Currently in Storage at the Hanford Central Waste Complex.

Waste code	Classification	Wastes with only a single code (cubic meters)	Wastes exhibiting multiple codes (cubic meters)
D001	Ignitable	- - -	2.38
D002	Corrosive	3.38	- - -
D003	Reactive	- - -	- - -
D006	TCLP-Cd	- - -	77
D007	TCLP-Cr	- - -	0.21
D008	TCLP-Pb	6.97	38
D009	TCLP-Hg	- - -	77
F003	Spent nonhalogenated solvents	- - -	0.28
WC01	Carcinogenic dangerous waste	- - -	16.75
WC02	Carcinogenic dangerous waste	- - -	60.4
WT01	Toxic dangerous waste	- - -	84
WT02	Toxic dangerous waste	1.47	8.61
	Total: 108[a] cubic meters		

[a]If a container held multiple hazardous constituents, the volume of the container was assigned to each constituent; therefore, the volumes listed in the second column cannot be summed to obtain total volume.

TCLP = Toxic characteristic leach procedure.

9 2 1 2 6 4 0 1 0 0 5

Table 3-16. Quantities and Designation of Low-Level Waste Currently in Storage at the Retrievable Storage Units.

Waste code	Classification	Wastes with only a single code (cubic meters)	Wastes exhibiting multiple codes (cubic meters)
D001	Ignitable	0.21	696
D003	Reactive	- - -	0.84
D005	TCLP-Ba	- - -	11.21
D006	TCLP-Cd	- - -	11.21
D007	TCLP-Cr	- - -	11.21
D008	TCLP-Pb	- - -	20.6
D009	TCLP-Hg	0.21	11.8
D011	TCLP-Ag	- - -	11.21
F001	Spent halogenated solvents	- - -	0.42
F003	Spent nonhalogenated solvents	- - -	13.0
F005	Spent nonhalogenated solvents	- - -	12.8
WC01	Carcinogenic dangerous waste	- - -	0.84
WC02	Carcinogenic dangerous waste	- - -	1.90
WP01	Persistent dangerous waste	- - -	0.63
WP03	Polycyclic hydrocarbons	0.21	- - -
WT01	Toxic dangerous waste	13.4	694
WT02	Toxic dangerous waste	- - -	1.89
	Total: 1,969 cubic meters[a]		

[a]If a container held multiple hazardous constituents, the volume of the container was assigned to each constituent; therefore, the volumes listed in the second column cannot be summed to obtain total volume. The total includes undesignated waste.

TCLP = Toxic characteristic leach procedure.

Table 3-17. Quantities and Designation of Transuranic Waste Currently in Storage at the Retrievable Storage Units.

Waste code	Classification	Wastes with only a single code (cubic meters)	Wastes exhibiting multiple codes (cubic meters)
D006	TCLP-Cd	- - -	0.57
D008	TCLP-Pb	- - -	0.57
P015	Beryllium dust	- - -	0.57
WT01	Toxic dangerous waste	- - -	0.57
	Total: 215[a]		

[a]If a container held multiple hazardous constituents, the volume of the container was assigned to each constituent; therefore, the volumes listed in the second column cannot be summed to obtain total volume. Currently, 214.32 cubic meters of this waste are undesignated, accounting for nearly all of the total.

TCLP = Toxic characteristic leach procedure.

9212640107

Table 3-18. Quantities and Designation of TRUSAF Stored Waste.

Category	Wastes with only a single code (cubic meters)	Wastes exhibiting multiple codes (cubic meters)
D002	5.04	5.45
D005	- - -	1.89
D006	- - -	2.52
D007	- - -	2.94
D008	3.15	14.27
D009	- - -	2.31
WC01	- - -	2.52
WC02	- - -	3.57
WP01	- - -	2.10
WT01	- - -	12.39
Total: 43[a]		

[a]If a container held multiple hazardous constituents, the volume of the container was assigned to each constituent; therefore, the volumes listed in the second column cannot be summed to obtain total volume. Currently, 18 cubic meters of this waste are undesignated.

TRUSAF = Transuranic Waste Storage and Assay Facility.

9 2 1 2 6 4 0 1 0 0 8

Table 3-19. Designation of 303-K Facility Stored Waste (June 1991).

	Waste description
Organic Constituents	
Perchloroethylene	Spent halogenated solvent
Trichloroethylene	Spent halogenated solvent
1,1,1-trichlorethane	Spent halogenated solvent
Ethyl acetate	Spent nonhalogenated solvent
Organic Degradation Products	
1,1-dichloroethylene	Spent halogenated solvent
cis-1,2-dichloroethylene	Spent halogenated solvent
trans-1,2-dichoroethylene	Spent halogenated solvent
Vinyl chloride	Solvent
Inorganic Constituents	
5% Beryllium/Zircaloy-2[a]	Metal alloy
Cadmium ion	Solution, sludge
Zircaloy-2[a]	Metal alloy

[a]Comprised of zirconium with 1.2 - 1.7% tin, 0.07 - 0.2% iron, 0.05 - 0.15% chromium, and 0.03 - 0.08% nickel.

9 2 1 2 6 4 0 1 0 0 9

4.0 REFERENCES

4.1 DOCUMENTS

Adams, M. R., L. Jensen, and W. W. Schulz, 1986, *Preliminary Assessment of the TRAC Model Predictor of Key Radionuclides*, RHO-RE-EV-89-P, Rockwell Hanford Operations, Richland, Washington.

DOE, 1987, *Final Environmental Impact Statement - Disposal of Hanford Defense High-Level, Transuranic and Tank Wastes*, DOE/EIS-0013, Vol. 1, U.S. Department of Energy, Washington, D.C.

DOE, 1990, *National Report on Prohibited Wastes and Treatment Options*, U.S. Department of Energy, Washington, D.C.

DOE-RL, 1989a, *Single-Shell Tank System Closure/Corrective Action Work Plan*, DOE/RL-89-16, Draft A, U.S. Department of Energy-Richland Operations Office, Richland, Washington.

DOE-RL, 1989b, *Hanford Site Dangerous Waste Part A Permit Application*, DOE/RL-88-21, Vol. 1-3, U.S. Department of Energy-Richland Operations Office, Richland, Washington.

DOE-RL, 1990a, *183-H Solar Evaporation Basins Closure/Postclosure Plan*, DOE/RL-88-04, Rev. 2, U.S. Department of Energy-Richland Operations Office, Richland, Washington.

DOE-RL, 1990b, *PUREX Storage Tunnels Dangerous Waste Permit Application*, DOE/RL-90-24, Rev. 0, DOE/RL Review Draft, U.S. Department of Energy-Richland Operations Office, Richland, Washington.

DOE-RL, 1990c, *Grout Treatment Facility Dangerous Waste Permit Application*, DOE/RL 88-27, Rev. 1, U.S. Department of Energy-Richland Operations Office, Richland, Washington.

DOE-RL, 1990d, *303-K Radioactive Mixed-Waste Storage Facility Closure Plan*, DOE/RL-90-004, Rev. 0, U.S. Department of Energy-Richland Operations Office, Richland, Washington.

DOE-RL, 1991, *Hanford Federal Facility Agreement and Consent Order Quarterly Progress Report for the Period Ending June 30, 1991*, DOE/RL-91-30, U.S. Department of Energy-Richland Operations Office, Richland, Washington.

Ecology, EPA, and DOE, 1990, *Hanford Federal Facility Agreement and Consent Order*, Vol. 1 and 2, as amended, Washington State Department of Ecology, U.S. Environmental Protection Agency, and U.S. Department of Energy, Olympia, Washington.

EPA, 1983a, *Guidelines and Specifications for Preparing Quality Assurance Program Plans*, QAMS-004/80, U.S. Environmental Protection Agency, Washington, D.C.

9 2 1 2 6 4 0 1 0 1 0

EPA, 1983b, *Interim Guidance and Specifications for Preparing Quality Assurance Project Plans*, QAMS-005/80, U.S. Environmental Protection Agency, Washington, D.C.

EPA, 1986, *Test Methods for the Evaluation of Solid Waste: Physical/Chemical Methods*, SW-846, 3rd ed., U.S. Environmental Protection Agency, Washington, D.C.

RHO, 1985, *Hanford Defense Waste Disposal Alternatives: Engineering Support Data for the Hanford Defense Waste Environmental Impact Statement*, RHO-RE-ST-30P, Rockwell Hanford Operations, Richland, Washington.

Sasaki, L. M., 1990, *Waste Characterization Plan for the Hanford Site Single-Shell Tanks*, WHC-EP-0210-REV2, Westinghouse Hanford Company, Richland, Washington.

Weiss, R. L., 1986, *TY Tank Farm Waste Characterization Data*, RHO-WM-TI-1P, Rockwell Hanford Operations, Richland, Washington.

WHC, 1989a, *Double-Shell Tank Waste Disposal Integration Plan*, WHC-EP-0229, Rev. 1, Westinghouse Hanford Company, Richland, Washington.

WHC, 1989b, *Characterization Plan for Stored Contact Handled Transuranic Waste*, WHC-EP-0223, Westinghouse Hanford Company, Richland, Washington.

WHC, 1989c, *Sampling Plan for Retrievably Stored Contact Handled Transuranic Waste at Hanford*, WHC-EP-0226, Westinghouse Hanford Company, Richland, Washington.

WHC, 1990a, *Hanford Site LDR RMW Stream Data Package*, WHC-MR-0224, Westinghouse Hanford Company, Richland, Washington.

WHC, 1990b, *Tank Farm Surveillance and Waste Status Summary Report for December 1990*, WHC-EP-0182-33, Westinghouse Hanford Company, Richland, Washington.

WHC, 1990c, *Annual Report of Tank Waste Treatability*, WHC-EP-0365, Westinghouse Hanford Company, Richland, Washington.

WHC, 1990d, *Single-Shell Tank Waste Retrieval Study*, WHC-EP-0352, Westinghouse Hanford Company, Richland, Washington.

WHC, 1990e, *Functional Requirements Baseline for the Closure of Single-Shell Tanks-Draft*, WHC-EP-0338, Westinghouse Hanford Company, Richland, Washington.

WHC, 1990f, *242-A Evaporator Process Condensate Stream-Specific Report*, Addendum 15-Final, WHC-EP-0342-15, Westinghouse Hanford Company, Richland, Washington.

WHC, 1990g, *PUREX Plant Ammonia Scrubber Distallate Stream-Specific Report*, Addendum 14-Final, WHC-EP-0342-14, Westinghouse Hanford Company, Richland, Washington.

WHC, 1990h, *Solid Waste Management Program Plan*, WHC-EP-0363, Westinghouse Hanford Company, Richland, Washington.

WHC, 1990i, *Hanford Site Radioactive Solid Waste Acceptance Criteria*, WHC-EP-0063-2, Westinghouse Hanford Company, Richland, Washington.

WHC, 1991, *Tank Wastes Discharged Directly to Soil at the Hanford Site*, WHC-MR-0227, Westinghouse Hanford Company, Richland, Washington.

4.2 CODE OF FEDERAL REGULATIONS AND FEDERAL REGISTER

40 CFR 265, *Interim Status Standards for Owners and Operators of Hazardous Waste Treatment, Storage, and Disposal Facilities*, Title 40, Code of Federal Regulations, Part 265, as amended, U.S. Environmental Protection Agency, Washington, D.C.

40 CFR 268, *Land Disposal Restrictions*, Title 40, Code of Federal Regulations, Part 268, as amended, U.S. Environmental Protection Agency, Washington, D.C.

40 CFR 761, *Polychlorinated Biphenyls (PCBs) Manufacturing, Processing, Distribution in Commerce, and Use Prohibitions*, Title 40, Code of Federal Regulations, Part 761, as amended, U.S. Environmental Protection Agency, Washington, D.C.

55 FR 22520, et seq., *Land Disposal Restrictions for Third Third Scheduled Wastes; Final Rule*, Federal Register, Vol. 55, No. 106, Sec. III.A.8.C.(2), P. 22627, June 1, 1990, U.S. Environmental Protection Agency, Washington, D.C.

4.3 FEDERAL AND STATE ACTS

Atomic Energy Act of 1954, as amended, 42 USC 2011.

National Environmental Policy Act of 1969, as amended, 42 USC 4321, et seq.

Resource Conservation and Recovery Act of 1976, as amended, 42 USC 6901, et seq.

State of Washington Hazardous Waste Management Act of 1976, as amended, Revised Code of Washington, Chapter 70.105, Olympia, Washington.

Toxic Substances Control Act of 1976, 15 USC 2601, et seq.

4.4 WASHINGTON ADMINISTRATIVE CODE

WAC, 1990, *Dangerous Waste Regulations*, Washington Administrative Code 173-303, Washington State Department of Ecology, Olympia, Washington.

This page intentionally left blank.

9 2 1 2 6 4 0 1 0 1 3

DISTRIBUTION

Number of Copies		
OFFSITE		
10	Washington State Department of Ecology Olympia, Washington 98504	
	T. L. Nord (5)	PV-11
	U.S. Environmental Protection Agency Richland, Washington	
	P. T. Day (5)	B5-01
ONSITE		
11	U.S. Department of Energy Field Office, Richland	
	R. F. Guercia (10)	A5-21
	Public Reading Room	A1-65
1	Pacific Northwest Laboratory	
	Technical Files	K1-11
76	Westinghouse Hanford Company	
	J. G. Adler	S6-19
	J. W. Badden	B2-19
	D. G. Black (20)	B2-20
	V. L. Blanchard	N3-11
	L. E. Borneman	B2-35
	G. L. Borsheim	R2-11
	H. C. Boynton	N3-11
	B. J. Broomfield	N3-13
	F. M. Coony	R2-18
	P. A. Craig	H4-21
	P. T. Day	B5-01
	L. M. Dittmer	B2-20
	D. A. Dodd	T6-50
	D. L. Flyckt	R2-20
	R. D. Fox	H4-52
	R. G. Gant	L6-18
	C. J. Geier	B2-19
	J. L. Gilbert	L6-40
	V. W. Hall	L4-88
	W. F. Heine	B2-35
	P. H. Jacobsen	N3-13

9 2 1 2 6 4 0 1 0 1 4

DISTRIBUTION

Number of Copies

ONSITE

Westinghouse Hanford Company (cont)

N. W. Kirch	R2-11
O. S. Kramer	B2-35
G. J. LeBaron	S6-19
D. W. Lindsey	H4-21
P. J. Mackey	B3-15
D. C. McCann	B5-25
R. L. Miller	L4-88
R. D. Morrison	B2-35
D. H. Nichols	H4-21
R. D. Pierce (5)	N3-13
R. E. Raymond	R1-80
R. J. Roberts	N3-13
J. O. Skolrud	B2-20
D. R. Speer	R2-77
T. B. Veneziano	B2-35
E. A. Weakley	L6-28
D. W. Wilson	N3-11
W. I. Winters	T6-50
EDMC (8)	H4-22
Central Files	L8-04
Document Processing and Distribution (2)	L8-15
Information Release Administration (3)	A2-24

9 2 1 2 6 4 0 1 0 1 5