This document was too large to scan as a single document. It has been divided into smaller sections.

Section 8 of 13

Document Information			
Document #	RPP-24544	Revision	1D
Title	DEMONSTRATION BULK VITRIFICATION SYS INDEPENDENT QUALIFIED REGISTERED PROFESSIONAL ENGINEER (IQRPE & RCRA DESIGN REVIEW PACKAGE		
Date	05/11/2006		
Originator	SHUFORD DH	ORG CO	CH2M
Recipient		Recipient Co.	
References	ECN-723118-R5, RPP-24544-R0, RPP-24544-R1, RPP-24544-R1A, RPP-24544-R1B, RPP-24544-R1C, EDT-821657, ECN-723118-R0, ECN-723118-R1, ECN-723118-R3, ECN-723118-R4		
Keywords	SUPPL TREATMENT		
Projects			

Requirement Number	Source	Requirement Text	Verification/Validation R - Review A - Analysis T - Test I - Inspection	Design Document Reference (Where is this requirement incorporated in the design)
1037	7.3	*Welding:* Welding procedures, welders, and welding operators shall be qualified in accordance with ASME AG-1.		
1038	7.4	*Installation of HEPA Filters and Adsorbers:* Installation personnel shall be instructed in the proper handling of the HEPA filters and carbon cell adsorbers prior to the installation and clamping of the filters.		
1039	7.4	Components should not be removed from protective cartons, crates, pallets, or skids until immediately before they are to be installed. Each item should be checked for physical damage, or evidence of abuse. Replace or repair damaged items before use. The position and alignment of foundations, anchors, hangers, ducts, housings, dampers, fans, motors, and other components shall be checked and their locations shall be within tolerance as shown on the drawings. Pleats of HEPA filters shall be vertical, gaskets of HEPA filters and adsorbers shall be securely affixed so that they are not displaced during installation. Clamping devices shall be in place and completely tightened to produce the required gasket compression.		
1040	7.4	After filters and adsorbers are unpacked and opened to the atmosphere, extreme care is required to ensure that degradation does not occur either from exposure before loading or by system operation during testing, construction, repair, or plant modification. Refilters and HEPAs are particularly vulnerable to degradation due to construction dust. If additional welding is required on the filter housing after HEPA filters or adsorbent is installed, the HEPA filters and adsorbent must be removed before starting this work. HEPA filters are very susceptible to pinholes from welding sparks. Carbon adsorbent is aged or poisoned by trace concentrations of vapors such as solvents, paint off-gassing, engine exhaust and welding fumes, or by moisture condensation.		
	8	QUALITY ASSURANCE		
1041		The design organization, manufacturers of components, and constructors (including subcontractors) shall each establish and comply with a comprehensive quality assurance program and plan which meets the requirements of ASME NQA-1.		
	9	Acceptance Testing		
1042	9	Acceptance testing shall be in accordance with ASME AG-1, Section TA and operational testing shall be in accordance with ASME N510. It is recommended that prefilters be installed before fan is first turned on to protect filters and fans from construction debris, and the system fan(s) should be operated for at least 25 hr before installation of HEPA filters and adsorbers to clean up the worst of construction dirt (artificial resistance may have to be added during this operation to prevent overloading of the fan motor). Prefilters may have to be replaced after this evolution. For personnel protection, personnel should not enter housing until fan has operated for a sufficient period of time to remove air entrainable debris. After installing the HEPA filters and adsorbers, the system heaters should be operated, where provided, to reduce, if necessary, the relative humidity of the air prior to making tests on the adsorbers.		
1043	9	All dampers, valves, and controls shall be exercised through their full operating range and shown to be in good operating condition before the start of testing. After completion of acceptance testing, the system shall be sealed and the fan controls locked out to protect the components during the remainder of construction operations at the site.		
	ASME N510 1989	TESTING OF NUCLEAR AIR TREATMENT SYSTEMS		
1044	4	*General:* The tests covered by this Standard are of two types: a) acceptance tests which verify that the systems have been correctly installed and meets the requirements of the project specification. b) surveillance tests which monitor the condition of the systems. This classification of tests as acceptance or surveillance, and the recommended minimum frequency of tests are shown in Table 1.		
1045	4.1	*Test Procedure:* Procedures shall be prepared for each required test, based upon the requirements of this standard		
1046	4.2	*Personnel:* Tests shall be performed only by persons who have demonstrated the competence to satisfactorily perform the specific tests in question as evidenced by experience and training. Personnel shall be certified in accordance with ANSI/ASME NQA-1 or ANS 3.1 and in accordance with the facility project specifications and quality assurance program.		
1047	4.3	*Instrumentation - Permanent:* The permanent instrumentation used on the installed systems shall have an established routine calibration program in accordance with the facility project specifications and quality assurance program.		
1048	4.4	*Instrumentation – Portable:* Portable instrumentation used in the performance of the tests specified in this standard shall meet the accuracy requirements of this standard and shall be calibrated in accordance with the facility project specifications and quality assurance program.		
	5	VISUAL INSPECTION		

0069792
8/13

Requirement Number	Source	Requirement Text	Verification/Validation R - Review A - Analysis T - Test I - Inspection	Design Document Reference (Where is this requirement incorporated in the design)
1049	5.1	*Purpose:* A visual inspection of the air treatment system, as specified by the test program, shall be made in conjunction with each test series to identify visual deficiencies in the system prior to commencing the tests. In addition, this inspection may be used to verify that system design and construction are in accordance with ASME N509.		
1050	5.2	*Summary of Method:* Visual inspection shall be made under a combination of background light plus supplementary light that provides adequate illumination of the surface to be inspected.		
1051	5.3	*Prerequisites:* Construction, modification, and/or repairs shall be completed to the extent of supporting the test series.		
1052	5.4	*Apparatus:* Supplementary light as required to provide adequate illumination of the surface to be inspected.		
1053	5.5	*Procedure:* As a minimum, the lists of items in para. 5.5.1 should be checked. When performed as part of the acceptance test, the visual inspection should be started prior to filter media installation and completed after completion of media installation. Those items indicated by an asterisk (*) usually need only be inspected during acceptance testing and/or after any system modification or repair. Whenever "unacceptable" is used, it is intended to mean any damage or condition that would impair the ability of the item to perform its function (reference ASME N509).		
	5.5.1	GUIDANCE FOR VISUAL INSPECTION		
1054	5.5.1.1	*Housing and Ducts:* (a) Adequate access to housing. (b) Adequate space for personnel and equipment for maintenance and testing.* (c) Doors of rigid construction to resist unacceptable flexure under operating conditions.* (d) Adequate seal between door and casing. (e) Gasket joints are dovetail type with a seating surface suitable for accommodating a knife edged sealing device. (f) Provision for opening doors from inside and outside of housing.* (g) Adequate number and acceptable condition of operable latches on access doors to achieve uniform seating. (h) Provision for locking doors.* (i) Adequate structural rigidity of housing to resist unacceptable flexure during operating conditions.* (j) Access to upper tiers, (above the 7 ft level), provided with permanent ladders and platforms.* (k) At least 3 ft clearance between banks of components for maintenance and testing.* (l) Door provided on each side, (upstream and downstream of each HEPA filter and component bank).*		
1055	5.5.1.1	*Housing and Ducts:* (m) No back to back installation of components.* (n) Sample ports located and labeled upstream and downstream of each HEPA filter and adsorber bank. (o) Challenge injection ports located and labeled. (p) Sample and injection ports equipped with leak-tight caps or plugged. (q) Housekeeping in and around housing adequate for maintenance, testing, and operation. (r) Adequate guards provided on fans for personnel safety. (s) Condition of flexible connection between housing and fan located external to housing adequate to prevent leakage of untreated air. (t) Fan-shaft seals installed where required. (u) Airtight seals for conduits, electrical connections, plumbing, drains, or other conditions that could result I bypassing of the housing or any component therein. (v) No sealant or caulking of any type on/in housings or component frames. Caulking on/in ducts may be permissible depending on project specifications. (w) Loop seals have adequate water level.		
1056	5.5.1.2	*Local Instrumentation:* (a) No unacceptable damage to instrumentation (e.g., gages, manometers, thermometers, etc.). (b) All connections complete.		
1057	5.5.1.3	*Lighting, Housing:* (a) Adequate lighting provided for visual inspection of housing and components. (b) Flush mounted fixtures serviceable from outside the housing.*		

Requirement Number	Source	Requirement Text	Verification/Validation R - Review A - Analysis T - Test I - Inspection	Design Document Reference (Where is this requirement incorporated in the design)
1058	5.5.1.4	*Mounting Frames for Filters and Moisture Separators:* (a) Continuous seal weld between members of all frames and between frame and housing.* (b) Adequate structural rigidity for supporting internal components during operating conditions without flexure.* (c) No unacceptable damage to the frames that may interfere with proper seating of components. (d) Sample canisters installed and unused connections capped or plugged leak-tight. (e) No penetrations of the mounting frame except for test canisters. (f) No sealant or caulking of any type.		
1059	5.5.1.5	*Filter Clamping Devices:* (a) Sufficient number of devices of adequate size to assure specified gasket compression. (b) Individual Clamping of filters and adsorbers.* (c) All clamping hardware complete and in good condition. (d) Adequate clearances provided between filter and adsorber units in same bank to tightened clamping devices.*		
1060	5.5.1.6	*Moisture Separators:* (a) No unacceptable damage to media, frame, or gaskets. (b) No dirt or debris loading which creates a higher than the specified pressure drop across the bank of components at the design airflow rate. (c) Proper installation of moisture separators.		
1061	5.5.1.7	*Air Heating Coils – Inside Housing:* (a) No unacceptable damage to coils which may affect operability of the heaters. (b) No unacceptable dirt or debris on or between coils.		
1062	5.5.1.8	*Pre-Filters:* (a) No damage to media, frame, or gaskets which may affect operability of prefilters. (b) No dirt or debris loading which creates higher than the specified pressure drop across the filter bank at the design flow rate. (c) Proper installation of prefilters.		
1063	5.5.1.9	*HEPA Filters:* (a) No unacceptable damage to filter media. (b) Acceptable condition and seating of gaskets with at least 50% compression. (c) No dirt or debris loading which creates higher than the specified pressure drop across the filter bank at the design flow rate. (d) No sealant or caulking of any type. (e) Filters are properly installed with pleats vertical.		
1064	5.5.1.10	*Adsorbers:* (a) No unacceptable damage to adsorbers or adsorbent beds., (b) Acceptable condition and seating of gaskets with at least 50% compression. (c) No through bolts on Type II adsorbers or other structure that could cause bypass in an adsorber bank. (d) No sealant or caulking of any type.		
1065	5.5.1.11	*Dampers – Housing and Associated Bypass Duct:* (a) No unacceptable damage to or distortion of frame or blades. (b) No missing seats or blade edging. (c) No unacceptable damage to shaft, pivot pins, operator linkages, operators, or packing. (d) Linkage connected and free from obstruction. (e) No unacceptable damage to gaskets.		
1066	5.6	*Acceptance Criteria:* The acceptance criteria shall be in accordance with test program or project specifications.		
1067	5.7	*Report:* The test procedure shall document the results of the test and conform to the owner's test program. Items identified as unacceptable should be further documented in the comment section of the test report to assist the owner in preparation of corrective action.		
	6	DUCT AND HOUSING LEAK AND STRUCTURAL CAPABILITY TESTS		
1068	6.1	*Purpose:* These tests are to verify the leak tightness and structural integrity of housings and ducts.		
	6.2	SUMMARY OF METHOD		
1069	6.2.1	*Structural Capability Test:* Ducts and housings of once-through and recirculation air treatment systems which could be subjected to structural capability pressure due to closure of dampers on suction or discharge of fans shall be pressure tested and verified that there is no unacceptable distortion or breach of integrity.		

Requirement Number	Source	Requirement Text	Verification/Validation R - Review A - Analysis T - Test I - Inspection	Design Document Reference (Where is this requirement incorporated in the design)
1070	6.2.2	*Duct and Housing Leak Tests:* Ducts and housings shall be pressurized to determine leak tightness. If the measured leakage is in excess of the acceptance criteria, the leaks should be located by one of the methods listed in paras. 6.5.4 or 6.5.5. After leaks are repaired, the housing or duct shall be retested.		
1071	6.3	*Prerequisites:* Construction, modifications, and repairs affecting the test boundary shall be complete and the inlet and discharge openings of the duct or housing sealed before the test is started. All electrical, piping, and instrument connections shall be complete and all permanent seals installed before the test is started.		
	6.4	APPARATUS		
	6.4.1	STRUCTURAL CAPABILITY TEST		
1072	6.4.1.1	Test fan with flow control.		
1073	6.4.1.2	Covers to seal test boundaries.		
1074	6.4.1.3	Clock or timer accurate to +/- 1.0 sec.		
1075	6.4.1.4	Pressure indicating device accurate to +/- 0.1 in. w.g.		
	6.4.2	DUCT AND HOUSING LEAK RATE TEST		
1076	6.4.2.1	Test fan with flow control.		
1077	6.4.2.2	Flowmeter or totalizing gas volume meter accurate to +/- 5% of reading.		
1078	6.4.2.3	Temperature indicating device accurate to +/- 5 degrees F.		
1079	6.4.2.4	Pressure indicating device accurate to +/- 0.1 in. w.g.		
1080	6.4.2.5	Covers to seal test boundaries.		
1081	6.4.2.6	Clock or timer accurate to +/- 1.0 sec.		
1082	6.4.3	*Bubble Method:* Bubble solution in a plastic squeeze-type laboratory wash bottle (a commercial test solution or a solution consisting of equal parts liquid detergent, glycerin, and water).		
1083	6.4.4	*Audible Leak Method:* Suitable electronic sound detection equipment (optional).		
	6.5	PROCEDURE		
	6.5.1	STRUCTURAL CAPABILITY TEST		
1084	6.5.1.1	Connect the test fan with flow control to the housing and /or ducting.		
1085	6.5.1.2	Install a pressure indicating device so that it will indicate the pressure inside the duct and/or housing being tested.		
1086	6.5.1.3	Seal test boundaries and close access openings in the normal manner.		
1087	6.5.1.4	Start the fan and operate until the structural capability pressure is achieved. Maintain pressure for the duration of the inspection.		
1088	6.5.1.5	Inspect the pressure boundary for distortion or breach of integrity.		
1089	6.5.1.6	Release pressure and inspect for permanent distortion.		
	6.5.2	DUCT AND HOUSING LEAK RATE TEST (CONSTANT PRESSURE METHOD)		
1090	6.5.2.1	Connect the test fan with flow control to the housing and /or ducting. Connect the flowmeter or totalizing gas volume meter between the fan and the housing (downstream of the throttling valve, if used).		
1091	6.5.2.2	Install temperature and pressure devices to indicate representative temperature and pressure inside the duct and/or housing being tested.		
1092	6.5.2.3	Seal test boundaries and close access openings in the normal manner. Do not use temporary sealants, duct tape, or similar temporary materials except for sealing and temporary blankoffs.		
1093	6.5.2.4	Start the fan and operate until the maximum operating pressure is achieved. Maintain pressure constant with a flow control device until the temperature remains constant within +/-0.5 degrees F for a minimum of 10 min.		
1094	6.5.2.5	Measure the flow rate of the air being added to or removed from the duct/housing while maintaining the maximum operating pressure within +/- 0.1 in. w.g. The flow rate should be measured by one of the following methods. a) For a flowmeter: record flow readings once a minute for a 10 min continuous period and average the readings to calculate the measured leakage flow rate. b) For a totalizing gas volume meter: measure the total volume of air for a 10 min continuous period and divide the measured volume by time (10 min) to calculate the measured leakage flow rate.		
1095	6.5.2.6	If the calculated leak rate exceeds the acceptance value, report to the owner and locate the leaks in accordance with para. 6.5.4 and /or para. 6.5.5. Repair and retest as required.		
	6.5.3	DUCT AND HOUSING LEAK RATE TEST (PRESSURE DECAY METHOD)		
1096	6.5.3.1	Connect test fan with shutoff valve to duct/housing.		

Requirement Number	Source	Requirement Text	Verification/Validation R - Review A - Analysis T - Test I - Inspection	Design Document Reference (Where is this requirement incorporated in the design)
1097	6.5.3.2	Install temperature and pressure devices to indicate representative temperatures and pressures inside the duct and/or housing being tested.		
1098	6.5.3.3	Seal test boundaries and close access openings in the normal manner.		
1099	6.5.3.4	Start the fan and operate until the maximum operating pressure is achieved. Maintain pressure constant with a flow control device until the temperature remains constant within +/-0.5 degrees F for a minimum of 10 min. Close shutoff valve.		
1100	6.5.3.5	Record initial time, pressure, and temperature.		
1101	6.5.3.6	Record barometric pressure.		
1102	6.5.3.7	Record pressure readings once a minute until pressure decays to 75% of the test pressure, or for a maximum of 15 min.		
1103	6.5.3.8	Record final time, pressure, and temperature.		
1104	6.5.3.9	Calculation leakage from the equation:...		
1105	6.5.3.10	If calculated leak rate exceeds the acceptance value, report to owner. Locate leaks in accordance with paras. 6.5.4 or 6.5.5. Repair and retest as required.		
	6.5.4	BUBBLE LEAK LOCATION METHOD		
1106	6.5.4.1	Pressurize the test boundary to a pressure adequate to locate leaks (not to exceed structural capability pressure).		
1107	6.5.4.2	With test boundary under continuous pressure, apply bubble solution to areas to be tested. Identify places where bubbles are found.		
1108	6.5.4.3	After repair of leaks, retest as required.		
	6.5.5	AUDIBLE LEAK LOCATION METHOD		
1109	6.5.5.1	Pressurize the test boundary to a pressure adequate to detect leaks (not to exceed structural capability pressure).		
1110	6.5.5.2	With test boundary under continuous pressure, located audible leaks (electronic sound detection equipment optional). Identify places where leaks are found.		
1111	6.5.5.3	After repair of leaks, retest as required.		
	6.6	ACCEPTANCE CRITERIA		
1112	6.6.1	*Structural Capability Test:* Meets the requirements of ASME N509, test program and project specifications.		
1113	6.6.2	*Duct and Housing Leak Test:* Meets the requirements of ASME N509, test program and project specifications.		
1114	6.7	*Report:* The test procedure shall include documentation of the results of the test and conform to the owner's test program.		
	7	MOUNTING FRAME PRESSURE LEAK TEST (OPTIONAL)		
1115	7.1	*Purpose:* This optional test is used to verify the absence of leaks through seal welds of the HEPA filter and/or adsorber frames, and between the frames and housing.		
1116	7.2	*Summary of Method:* Openings of the test boundary and mounting frame shall be sealed with blank-off plates. The leak tightness of the mounting frames meets requirements of para. 6.6.2 when tested by the pressure decay method (para. 6.5.3) or the constant pressure method (para. 6.5.2).		
	7.3	PREREQUISITES		
1117	7.3.1	Construction, modifications, and repairs of the test boundary shall be completed.		
1118	7.3.2	Mounting frame blank-off plates installed.		
1119	7.3.3	Test boundary sealed and all doors and access panels closed in the normal manner.		
1120	7.4	*Apparatus:* The same as para. 6.4.		
1121	7.5	*Procedure:* The same as paras. 6.5.2 or 6.5.3		
1122	7.6	*Acceptance Criteria:* Meets the requirements of ASME N509, the test program and project specifications.		
1123	7.7	*Report:* The test procedure shall include documentation of the results of the test and conform to the owner's test program or project specifications.		
	8	AIRFLOW CAPACITY AND DISTRIBUTION TESTS		
1124	8.1	*Purpose:* These tests shall be used: a) to verify that the design airflow can be achieved with the fan as furnished, under actual field conditions at maximum and minimum filter pressure drop; b) to verify that airflow distribution across each HEPA filter bank or adsorber bank is uniform at the design flow rates.		

Requirement Number	Source	Requirement Text	Verification/Validation R - Review A - Analysis T - Test I - Inspection	Design Document Reference (Where is this requirement incorporated in the design)
	8.2	SUMMARY OF METHOD		
1125	8.2.1	*Airflow Capacity Test:* Test airflow is measured to verify capacity at clean and dirty filter conditions when the system is operated at normal or simulated minimum and maximum design conditions.		
1126	8.2.2	*Airflow Distribution Test:* Velocity profiles of the filter bank(s) shall be made to evaluate uniform airflow distribution. The presence of uniform airflow distribution for the upstream HEPA filter bank shall be adequate to verify uniform distribution for the downstream adsorber and/or HEPA filter banks if the banks have relatively uniform geometry and cross-sectional area, and are not interrupted by turns or bends.		
	8.3	PREREQUISITES		
1127	8.3.1	*Airflow Capacity Test:* System airflow balancing required for the performance of these tests shall be completed. The extent of the system balancing requirement shall be documented in the test program. All housing components, or equal artificial resistance devices shall be installed.		
1128	8.3.2	*Airflow Distribution Test:* Airflow capacity test is complete and all components shall be installed. Note: filters should be in clean condition to prevent variations in flow due to unequal loading.		
	8.4	APPARATUS		
1129	8.4.1	Standard pitot tube (length as required).		
1130	8.4.2	Pressure indicating device accurate to +/-5.0% of reading.		
1131	8.4.3	Rotating vane, heated wire or heated thermocouple anemometer or other suitable measuring device accurate to +/-5.0% of reading.		
	8.5	PROCEDURE		
1132	8.5.1	*Airflow Capacity Test:* 1) Start system fan and verify stable (no surging) fan operation for 15 min. 2) Measure system airflow in accordance with para 2.2 or equivalent. 3) *Clean System Airflow:* With new housing components installed, or simulated, operate at the clean differential pressure and compare measured flow rate (using methods of para. 8.5.1.2) with the value specified by the test program or project specifications. If the specified value cannot be achieved, report to owner. 4) *Maximum Housing Component Pressure Drop Airflow:* After successful completion of para. 8.5.1.3, increase housing component resistance (artificially by blanking off portions of the filter bank or by adjusting throttling dampers) until the maximum housing component pressure drop for the system (as specified in the test program or project specifications) is achieved. Measure flow rate per para. 8.5.1.2. If the maximum housing component pressure drop airflow cannot be achieved, report to owner. 5) Return system to "clean" condition.		
	8.5.2	AIRFLOW DISTRIBUTION TEST		
1133	8.5.2.1	*Airflow Distribution through HEPA Filter Banks:* The minimum number of velocity measurements shall be one in the center of each filter. All measurements should be made an equal distance way from the filters. Velocity measurements should be made downstream of the filters to take advantage of the airflow distribution dampening effects of the HEPA filters.		
1134	8.5.2.2 to 8.5.2.4	*Airflow Distribution through Adsorber Banks:* 1) Type I – Follow same procedures specified for HEPA filter banks in para. 8.5.2.1. 2) Type II Modular Trays – Same procedure specified in 8.5.2.1 except that all velocity measurements shall be made in the plane of the face of the air channels, in the center of every open channel and an equal distance away from the adsorbers. 3) Type III – Velocity measurements shall be made in the plane of the face of the air channels. These measurements shall be made in centers of equal area that cover the entire open face, not in excess of 12 in. between points on a channel, and an equal distance away from the adsorber. (c) Calculate the average of the velocity readings (Section 3). (d) Note the highest and lowest velocity readings and calculate the percentage they vary from the average found in para. 8.5.2.3. If acceptance criteria are exceeded, notify owner.		
	8.6	ACCEPTANCE CRITERIA		
1135	8.6.1	*Airflow Capacity Test:* Airflow shall be within +/-10% of the value specified in the test program or project specifications. Maximum housing component pressure drop airflows shall be +/-10% of the value specified in the test program or project specifications with the pressure drop greater than or equal to the maximum housing component pressure drop. For systems with carbon adsorbers, the maximum velocity of air through the carbon beds shall be limited to that value specified in the laboratory test (Section 15).		
1136	8.6.2	*Airflow Distribution Test:* No velocity readings shall exceed 420% of the calculated average. For systems with carbon adsorbers, maximum velocity of air through the carbon beds shall be limited to that value specified in the laboratory test (Section 15).		

Requirement Number	Source	Requirement Text	Verification/Validation R - Review A - Analysis T - Test I - Inspection	Design Document Reference (Where is this requirement incorporated in the design)
1137	8.7	*Report:* The test procedure shall include documentation of the results of the test and conform to the owner's test program.		
	9	AIR-AEROSOL MIXING UNIFORMITY TEST		
1138	9.1	*Purpose:* This test is a prerequisite for conducting the tests in Sections 10 and 11, in-place leak tests of HEPA filter and adsorber banks, respectively. The purpose of the test is to verify that the challenge gas is introduced so as to provide uniform mixing in the airstream approaching the HEPA filter bank or adsorber stage to be tested. When acceptable uniformity is achieved, an upstream sample taken in the same position that the uniformity data were obtained is defined as an acceptable single point upstream sample. This test is performed upon completion of initial system installation and after modification or major repair. It is not required each time an in-place leak test of the filters or adsorbers is performed. If the location of the injection and/or upstream sample ports is changed, the air-aerosol mixing uniformity shall be recertified.		
1139	9.2	*Summary of Method:* DOP aerosol is introduced into the airstream at a previously selected injection point. Aerosol concentration readings shall be taken across a plane parallel to, and a short distance upstream of, the HEPA filter bank or adsorber stage. The uniformity of the reading establishes the acceptability of the injection port location. DOP aerosol is used to establish uniform challenge/air mixing upstream of both HEPA filter and adsorber banks.		
1140	9.3	*Prerequisites:* The airflow capacity and distribution tests of Section 8 have been satisfactorily performed. If permanent manifolds are installed, the injection and sample manifold qualification testing has been completed in accordance with Appendix D of ASME N509.		
	9.4	APPARATUS		
1141	9.4.1	Aerosol generator.		
1142	9.4.2	Aerosol detection instrument.		
1143	9.4.3	System fan or auxiliary fan (for systems normally without fans) capable of producing the airflow specified in the test program.		
	9.5	PROCEDURE		
1144	9.5.1	Connect an aerosol generator to the injection port.		
1145	9.5.2	Start system fan (or auxiliary fan). Establish airflow as specified by the test program and project specifications.		
1146	9.5.3	Connect aerosol detection instrument to an upstream sample port.		
1147	9.5.4	Start DOP injection.		
1148	9.5.5	Take a concentration reading approximately 1 ft upstream and at the center of each filter. Allow adequate time at each location to ensure representative readings.		
1149	9.5.6	Calculate average concentration (Section 3).		
1150	9.5.7	Calculate the percent difference of each reading with respect to the average.		
1151	9.5.8	If the maximum and minimum readings do not meet the acceptance criteria, notify owner.		
1152	9.6	*Acceptance Criteria:* No readings shall exceed +/-20% of the calculated average reading.		
1153	9.7	*Report:* The test procedure shall include documentation of the results of the test and conform to the owner's test program.		
	10	HEPA FILTER BANK IN-PLACE TEST		
1154	10.1	*Purpose:* This test is used for both acceptance and surveillance leak testing of the installed HEPA filter bank.		
1155	10.2	*Summary of Method:* A DOP challenge is injected into the airstream upstream of the HEPA filter bank. Concentrations shall be determined upstream and downstream of the filter bank. Percent penetration is determined from the ratio of the downstream to upstream concentrations (Section 3).		
1156	10.3	*Prerequisites:* The upstream sample and injection points to be used are those qualified per Section. Single point downstream sample points shall be downstream of a fan, or downstream sample manifolds shall be qualified per ASME N509.		
	10.4	APPARATUS		
1157	10.4.1	DOP aerosol (or suitable alternate).		
1158	10.4.2	DP aerosol generator.		
1159	10.4.3	Aerosol detection instrument.		
1160	10.4.4	System fan or auxiliary fan (for systems normally without fans) capable of producing the airflow specified in the test program.		
	10.5	PROCEDURE		
1161	10.5.1	Establish airflow through the HEPA filter bank at the flow rate specified by the test program or project specifications.		
1162	10.5.2	Measure and record the pressure drop across the bank, using system or temporary test instrumentation.		

Requirement Number	Source	Requirement Text	Verification/Validation R - Review A - Analysis T - Test I - Inspection	Design Document Reference (Where is this requirement incorporated in the design)
1163	10.5.3	Connect aerosol detection instrument sample lines to the upstream and downstream sample ports.		
1164	10.5.4	Check the background particulate concentration upstream and downstream of the HEPA filter bank. The preinjection background levels shall be stable to ensure proper instrument response. The levels shall not interfere wit the detector's ability to detect penetration smaller than the maximum penetration allowed by the test program or project specifications.		
1165	10.5.5	Connect DOP aerosol generator to injection port and start injection.		
1166	10.5.6	Record upstream concentration reading.		
1167	10.5.7	Record downstream concentration reading.		
1168	10.5.8	Repeat steps from paras. 10.5.6 and 10.5.7 until readings are repeatable within +/-5% of respective previous readings. Use final set of readings to calculate penetration.		
1169	10.5.9	Calculate penetration (Section 3). If calculated penetration exceeds the acceptance criteria, notify the owner.		
1170	10.5.10	When the housing contains more than one bank of HEPA filters in series which are required to be leak tested, repeat the procedure for each bank.		
1171	10.6	*Acceptance Criteria:* Allowable penetration shall be as stated in the test program or project specifications.		
1172	10.7	*Report:* The test procedure shall include documentation of the results of the tests and conform to the owner's test program or Project specifications.		
	11	ADSORBER BANK IN-PLACE LEAK TEST		
1173	11.1	*Purpose:* This test shall be used for both acceptance and surveillance leak testing of the installed adsorber bank. If samples of adsorbent are to be taken for laboratory testing (Section 15), remove such samples prior to this test, and restore bank to operating condition.		
1174	11.2	*Summary of Method:* A halide challenge gas is injected into the airstream upstream of the adsorber bank. Concentrations shall be determined upstream and downstream of the bank. Percent penetration is determined from the ratio of downstream to upstream concentration (Section 3).		
1175	11.3	*Prerequisites:* The upstream sample and injection points to be used shall be those qualified per Section 9. Downstream sample points shall be downstream of a fan; or downstream sample manifolds shall be qualified per ASME N509.		
	11.4	APPARATUS		
1176	11.4.1	Halide gas R-11 is preferred; R-112 (or R-12A) is an acceptable alternate.		
1177	11.4.2	Halide gas generator.		
1178	11.4.3	Halide gas detection instrument.		
1179	11.4.4	System fan or auxiliary fan (for systems normally without fans) capable of producing the airflow specified in the test program or project specifications. NOTES: 1) Sample line lengths should be minimized to reduce sample response time and of equal lengths to eliminate time delay errors. 2) It may be necessary to operate system for a period to purge all residual challenge gas from a prior test to reduce background concentrations to acceptable values.		
	11.5	PROCEDURE		
1180	11.5.1	Establish airflow through the adsorber bank at the flow rate specified by the test program or project specifications.		
1181	11.5.2	Connect sample lines to the upstream and downstream sample ports.		
1182	11.5.3	Measure upstream and downstream background halide concentrations. The concentrations shall not interfere with the halide detection instrument's capability to detect leaks smaller than the maximum leak allowed by the test program or project specifications.		
1183	11.5.4	Connect the generator to the injection port.		
1184	11.5.5	Start injection. After generator stabilization, maintain upstream challenge concentration +/-20% of average concentration during the injection period.		
1185	11.5.6	Take upstream and downstream halide concentration readings as rapidly as instrument response permits. Record the time and concentration for each reading.		
1186	11.5.7	Calculate penetration. If calculated penetration exceeds the acceptance criteria, notify the owner.		
1187	11.5.8	When the housing contains more than one bank of adsorbers in series, repeat the procedure for each bank utilizing the injection and sample ports qualified in Section 9.		
1188	11.6	*Acceptance Criteria:* Allowable penetration shall be as stated in the test program or project specifications.		
1189	11.7	*Report:* The test procedure shall include documentation of the results of the tests and conform to the owner's test program or Project specifications.		

Requirement Number	Source	Requirement Text	Verification/Validation R - Review A - Analysis T - Test I - Inspection	Design Document Reference (Where is this requirement incorporated in the design)
	12	DUCT DAMPER BYPASS TEST		
1190	12.1	*Purpose:* To measure the leakage through closed dampers or valves intended to eliminate flow through a bypass duct.		
1191	12.2	*Summary of Method:* For low leakage valves, a pressure decay test is usually the method of choice. For higher leakage devices (a few tenths of a percent of rated flow or greater) a DOP aerosol or halide leak test may be more convenient. If a DOP aerosol or halide leak test is specified, only one damper at a time is to be tested. The method shall be defined in the test program or project specifications.		
	12.3	PREREQUISITES		
1192	12.3.1	A duct leak test shall have been performed prior to this test in accordance with Section 6 of this Standard.		
1193	12.3.2	For a DOP aerosol leak test or a halide leak test, injection and sample ports shall be located to ensure proper challenge to the damper and representative upstream and downstream samples.		
	12.4	APPARATUS		
1194	12.4.1	For a DOP aerosol leak test or a halide leak test, the equipment shall be that listed in Section 10 or 11, respectively.		
1195	12.4.2	For a pressure decay leak test, the equipment shall be that listed in Section 6.		
	12.5	PROCEDURE		
1196	12.5.1	For a DOP aerosol leak test or a halide leak test, the procedure shall be that listed in Section 10 or 11, respectively.		
1197	12.5.2	For a pressure decay leak test, the procedure shall be that listed in Section 6.		
1198	12.5.3	If the calculated leakage exceeds the acceptance criteria, notify owner.		
1199	12.6	*Acceptance Criteria:* Airflow leakage rates can be calculated in percentage penetration by the following formula: % penetration = 100 x bypass leakage rate/measured airflow capacity flow rate. Allowable penetration shall be in accordance with the test program or project specifications.		
1200	12.7	*Report:* The test procedure shall include documentation of the results of the tests and conform to the owner's test program or Project specifications.		
	13	SYSTEM BYPASS TEST		
1201	13.1	*Purpose:* Systems using HEPA filters and adsorber banks may contain bypass dampers, ducts, conduits, floor drains, pipe penetrations, etc., which could potentially defeat the purpose of high efficiency nuclear air treatment components. Therefore, it is necessary to perform tests which challenge all these potential bypass leakage paths. In cases where performance of Sections 10, 11, and 12 can be shown to have challenged all potential bypass paths, then the requirements for the system bypass test may be considered to have been satisfied.		
1202	13.2	*Summary of Method:* Select injection and sample locations which encompass al possible bypass leakage paths to the treatment system. Testing is performed per Sections 10 or 11.		
	13.3	PREREQUISITES		
1203	13.3.1	Sections 10 and 11 of this Standard shall have been completed prior to the performance of this test.		
1204	13.3.2	For bypass leakage paths, uniform upstream challenge agent mixing is required to ensure adequate challenge during the test. If challenge cannot be verified during the system test, a separate test should be specified per Section 12.		
1205	13.4	*Apparatus:* The DOP or halide leak test equipment shall be that listed in Sections 10 or 11, respectively.		
	13.5	PROCEDURE		
1206	13.5.1	Establish airflow through the system as specified by the test program or project specifications.		
1207	13.5.2	Connect sample lines from the detector(s) to upstream and downstream sample ports.		
1208	13.5.3	Check the background concentration levels. The levels shall not interfere with the detector's capability to detect leaks smaller than the maximum leak allowed by the test program or project specifications.		
1209	13.5.4	Connect the challenge generator to the injection port. Start injection.		
1210	13.5.5	Record upstream and downstream readings per sections 10 and 11 depending on type of challenge used.		
1211	13.5.6	Calculate penetration (section 3). If calculated penetration exceeds the acceptance criteria, notify the owner.		
1212	13.6	*Acceptance Criteria:* Allowable penetration shall be as stated in the test program or project specifications.		
1213	13.7	*Report:* The test procedure shall include documentation of the results of the tests and conform to the owner's test program or project specifications.		
	14	AIR HEATER PERFORMANCE TEST		

Requirement Number	Source	Requirement Text	Verification/Validation R - Review A - Analysis T - Test I - Inspection	Design Document Reference (Where is this requirement incorporated in the design)
1214	14.1.1	*Purpose:* This test is used to verify that the nuclear air treatment system air heater performance meets the test program or project specifications.		
1215	14.2	*Summary of Method:* Power-on electrical and mechanical tests shall be performed to verify correct operation and condition of the air heater.		
	14.3	**PREREQUISITES**		
1216	14.3.1	Visual inspection of the heater is completed (para. 5.5.1.7).		
1217	14.3.2	Electrical control and feed power is available and all safety interlocks have been checked.		
	14.4	**APPARATUS**		
1218	14.4.1	Clamp-on ammeter and voltmeter accurate to +/-5% of reading.		
1219	14.4.2	Temperature indicating device accurate to +/-1.0 degrees F.		
	14.5	**PROCEDURE**		
1220	14.5.1	*Power-On Electrical Tests:* With power on, and system operating at rated airflow, measure the voltage and current of all power circuits.		
1221	14.5.2	*Power-On Mechanical Tests:* With heater energized and system operating at rated airflow, measure the temperature of the entering and leaving air. A sufficient number of measurements shall be taken to determine average entering and leaving temperatures.		
1222	14.5.3	If measured values do not meet acceptance criteria, notify the owner.		
1223	14.6	*Acceptance Criteria:* Operating currents, voltages and change in temperature shall be within the limits of test program or project specifications.		
1224	14.7	*Report:* The test procedure shall include documentation of the results of the tests and conform to the owner's test program or Project specifications.		
	15	**LABORATORY TESTING OF ADSORBENT**		
1225	15.1	*Purpose:* These tests shall be performed to verify the acceptability of the adsorbent in the adsorber bank on periodically withdrawn samples.		
1226	15.2	*Summary of Method:* Adsorbent samples shall be tested in the laboratory to determine the overall efficiency of the entire bank for the retention of radioiodine.		
1227	15.3	*Prerequisites:* Refer to Table 1, Note (3) (Exhibit G)		
1228	15.4	*Apparatus:* The laboratory apparatus required for the performance of these tests is that specified in ASTM D 3803.		
	15.5	**PROCEDURE**		
1229	15.5.1	Test adsorbent samples in accordance with ASTM D 3803.		
1230	15.5.2	If results do not meet acceptance criteria, notify the owner.		
1231	15.6	*Acceptance Criteria:* Adsorbent test criteria shall be as stated in the test program or project specifications.		
1232	15.7	*Report:* The test procedure shall include documentation of the results of the tests and conform to the owner's test program or Project specifications.		

STD.ASME AG-1-ENGL 1997 ■ 0759670 0603314 48T ■

TABLE DA-3100
ALLOWABLE MATERIALS

Designation	Title
	ASME Ferrous Material Specifications
Pipe	
SA-106	Seamless Carbon Steel Pipe for High-Temperature Service
SA-134	Electric-Fusion (Arc)-Welded Steel Plate Pipe
SA-135	Electric-Resistance-Welded Steel Pipe
SA-155	Electric-Fusion-Welded Steel Pipe for High-Pressure Service
SA-312	Seamless and Welded Austenitic Stainless Steel Pipe
SA-335	Seamless Ferritic Alloy Steel Pipe for High-Temperature Service
SA-530	General Requirements for Specialized Carbon and Alloy Steel Pipe
Tubing	
SA-213	Seamless Ferritic and Austenitic Alloy Steel Boiler, Superheater, and Heat Exchanger Tubes
Plates	
SA-240	Chromium and Chromium-Nickel Stainless Steel Plate, Sheet, and Strip for Fusion-Welded Unfired Pressure Vessels
SA-285	Plates for Pressure Vessels
SA-515	Carbon Steel Plates for Pressure Vessels for Intermediate and Higher Temperature Service
SA-516	Carbon Steel Plates for Pressure Vessels for Moderate and Lower Temperature Service
Forgings	
SA-105	Forged or Rolled Steel Pipe Flanges, Forged Fittings, and Valves and Parts for High-Temperature Service
SA-181	Forged or Rolled Steel Pipe Flanges, Forged Fittings, and Valves and Parts for General Service
SA-182	Forged or Rolled Alloy-Steel Pipe Flanges, Forged Fittings, and Valves and Parts for High-Temperature Service
Bolts, Nuts, and Studs	
SA-193	Alloy Steel Bolting Materials for High-Temperature Service
SA-194	Carbon and Alloy Steel Nuts for Bolts for High-Pressure and High-Temperature Service
SA-307	Low-Carbon Steel Externally and Internally Threaded Standard Fasteners
SA-354	Quenched and Tempered Alloy Steel Bolts and Studs with Suitable Nuts
Castings	
SA-216	Carbon Steel Castings Suitable for Fusion Welding for High-Temperature Service
SA-217	Alloy Steel Castings for Pressure-Containing Parts Suitable for High-Temperature Service
SA-351	Ferritic and Austenitic Steel Castings for High-Temperature Service
Structural Components	
SA-36	Structural Steel
SA-283	Low and Intermediate Tensile Strength Carbon Steel Plates of Structural Quality
	ASME Nonferrous Material Specifications
SB-209	Aluminum Alloy Sheet and Plate

(Continued)

Exhibit A

TABLE DA-3100 (CONT'D)
ALLOWABLE MATERIALS

Designation	Title
SB-211	Aluminum Alloy Bars, Rods, and Wire
SB-221	Aluminum Alloy Extruded Bars, Rods, and Shapes
	ASTM Ferrous Material Specifications
Structural Components	
A-36	Structural Steel
A-108	Steel Bars, Carbon, Cold Finished, Standard Quality
A-176	Stainless and Heat-Resisting Chromium-Nickel Steel Plate, Sheet, and Strip
A-242	High-Strength, Low Alloy Structural Steel
A-276	Stainless and Heat-Resisting Steel Bars and Shapes
A-284	Low and Intermediate Tensile Strength Carbon Steel Plates for Machining and General Construction
A-575	Steel Bars, Carbon, Merchant Quality 'M' Grades
A-576	Steel Bars, Carbon, Hot-Wrought, Special Quality
Plate, Sheet, and Strip	
A-123	Zinc (Hot-Galvanized) Coatings on Products Fabricated from Rolled, Pressed, and Forged Steel Shapes, Plates, Bars, and Strip
A-167	Stainless and Heat-Resisting Chromium-Nickel Steel Plate, Sheet, and Strip
A-240	Heat-Resisting Chromium and Chromium–Nickel Stainless Steel Plate, Sheet, and Strip for Fusion Welded Unfired Pressure Vessels
A-366	Cold-Rolled Carbon Steel Sheet, Commercial Quality
A-446	Steel Sheet, Zinc-Coated (Galvanized) by the Hot-Dip Process, Structural (Physical) Quality
A-480	General Requirements for Flat-Rolled Stainless and Heat-Resisting Steel Plate, Sheet, and Strip
A-484	General Requirements for Stainless and Heat-Resisting Wrought Steel Products (Except Wire)
A-525	General Requirements for Steel Sheet, Zinc Coated by Hot-Dip Process
A-526	Steel Sheet, Zinc Coated by Hot-Dip Process, Commercial Quality
A-527	Steel Sheet, Zinc Coated by Hot-Dip Process, Lock Forming Quality
A-570	Hot Rolled Carbon Steel Sheet and Strip, Structural Quality
A-582	Free Machining Stainless and Heat-Resisting Steel Bars, Hot-Rolled or Cold-Finished
A-606	Steel Sheet and Strip, Hot- and Cold-Rolled, High Strength, Low-Alloy with Improved Corrosion Resistance
A-607	Steel Sheet and Strip, Hot- and Cold-Rolled, High Strength, Low-Alloy Columbium and/or Vanadium
A-611	Steel, Cold-Rolled Sheet, Carbon, Structural
	ASTM Nonferrous Material Specifications
Tubing	
B-68	Seamless Annealed Soft Copper Tubing
B-75	Seamless Copper
B-88	Seamless Copper Tube

STD.ASME AG-1-ENGL 1997 ■ 0759670 0603631 201 ■

TABLE FG-3100
ALLOWABLE MATERIALS

ASTM Desig.	ANSI Desig.	
Carbon Steel Plates and Sheets		
A 283		Low and Intermediate Tensile Strength Carbon Steel Plats, Specification for,
A 284		Pressure Vessel Plates, Carbon Steel Low and Intermediate Strength, Specification for,
A 366		Steel, Carbon, Cold Rolled Sheet, Commercial Quality, Specification for,
A 414		Carbon Steel Sheet for Pressure Vessels, Specification for,
A 568		General Requirements for Steel, Carbon and High Strength Low-Alloy Hot-Rolled Sheet, and Cold-Rolled Sheet, Specification for,
A 569		Steel, Carbon (0.15 Maximum Percent), Hot-Rolled Sheet and Strip, Commercial Quality, Specification for,
A 570		Hot-Rolled Carbon Steel Sheet and Strip, Structural Quality, Specification for,
A 611		Steel, Cold-Rolled Sheet, Carbon, Structural Quality, Specification for,
A 620		Steel, Sheet, Carbon Drawing Quality, Special Killed, Cold-Rolled, Specification for,
A 621		Steel Sheet and Strip, Carbon, Hot Rolled, Drawing Quality, Specification for,
A 635		Steel Sheet and Strip, Heavy Thickness Coils, Carbon, Hot-Rolled, Specification for
A 659		Steel, Carbon (0.16 Maximum to 0.25 Maximum Percent), Hot-Rolled Sheet and Strip, Commercial Quality, Specification for,
A 236		Structural Steel, Specification for,
Stainless Steel Plates and Sheets		
A 167		Stainless and Heat-Resisting Chromium Steel Plate, Sheet, and Strip, Specification for,
A 240		Heat-Resisting Chromium and Chromium-Nickel Stainless Steel Plate, Sheet, and Strip for Pressure Vessels, Specification for,
Galvanized Steel Plates and Sheets		
A 446		Steel Sheet, Zinc-Coated (Galvanized) by the Hot-Dip Process, Structural (Physical Quality), Specification for,
A 525		Steel Sheet, Zinc-Coated (Galvanized) by the Hot-Dip Process, General Requirements for, Specification for,
A 526		Steel Sheet, Zinc-Coated (Galvanized) by the Hot-Dip Process, Commercial Quality, Specification for,
A 527		Steel Sheet, Zinc-Coated (Galvanized) by the Hot-Dip Process, Lock Forming Quality, Specification for,
A 528		Steel Sheet, Zinc-Coated (Galvanized) by the Hot-Dip Process, Drawing Quality, Specification for,
A 591		Steel Sheet, Cold Rolled, Electrolytic Zinc-Coated, for Light Coating Mass Applications, Specification for,
A 642		Steel Sheet, Zinc-Coated (Galvanized) by the Hot-Dip Process, Drawing Quality, Special Killed, Specification for,

(Continued)

STD.ASME AG-1-ENGL 1997 ■ 0759670 0603632 148 ■

TABLE FG-3100 (CONT'D)
ALLOWABLE MATERIALS

ASTM Desig.	ANSI Desig.	
Carbon Steel Structural Members		
A 36		Structural Steel, Specification for,
A 106		Seamless Carbon Steel Pipe for High Temperature Services, Specification for,
A 108		Steel, Bars, Carbon, Cold Finished, Standard Quality, Specification for
A 500		Cold-Formed Welded and Seamless Carbon Steel Structural Tubing in Rounds and Shapes, Specification for,
A 501		Hot-Formed Welded and Seamless Carbon Steel Structural Tubing, Specification for,
A 575		Steel Bars, Carbon, Merchant Quality, M-Grades, Specification for,
A 576		Steel Bars, Carbon, Hot Wrought, Special Quality, Specification for,
Stainless Steel Structural Members		
A 276		Stainless and Heat Resisting Steel Bars and Shapes, Specification for,
A 312		Seamless and Welded Austenitic Stainless Steel Pipe, Specification for,
A 479		Stainless and Heat-Resisting Steel Wire, Bars and Shapes for Use in Boilers and Other Pressure Vessels, Specification for,
A 511		Seamless Stainless Steel Mechanical Tubing, Specification for,
A 554		Welded Stainless Steel Mechanical Tubing, Specification for,
Galvanized Steel Structural Members		
A 53		Pipe, Steel, Black and Hot-Dipped, Zinc-Coated Welded and Seamless, Specification for,
	C80.3	Electrical Metallic Tubing-Zinc Coated
Stainless Steel Bolts and Nuts		
A 193		Alloy-Steel and Stainless Steel Bolting Materials for High-Temperature Service, Specification for,
A 194		Carbon and Alloy Steel Nuts for Bolts for High-Pressure and High-Temperature Service, Specification for,
A 493		Stainless and Heat-Resisting Steel forCold Heading and Cold Forging Bar and Wire, Specification for,
Carbon Steel Bolts and Nuts		
A 307		Carbon Steel Bolts and Studs, 60 000 psi Tensile Strength, Specification for,
A 325		High-Strength Bolts for Structural Steel Joints, Specification for,
A 449		Quenched and Tempered Steel Bolts and Studs, Specification for,
A 548		Steel Wire, Carbon, Cold-Heading Quality, for Tapping or Sheet Metal Screws, Specification for,
A 563		Carbon and Alloy Steel Nuts, Specification for,
	B18.21.1	Lock Washers
	B18.22.2	Plain Washers

(Continued)

Exhibit B

STD·ASME AG-1-ENGL 1997 ■ 0759670 0603633 084 ■

TABLE FG-3100 (CONT'D)
ALLOWABLE MATERIALS

ASTM Desig.	ANSI Desig.	
Nonferrous Nuts		
F 467		Nonferrous Nuts for General Use, Specification for,
Coatings		
A 123		Zinc (Hot-Galvanized-Coatings on Products Fabricated from Rolled, Pressed, and Forged Steel Shapes, Plates, Bars, and Strip, Specification for,
B 633		Electrodeposited Coatings of Zinc on Iron and Steel, Specification for,
A 153		Zinc Coating (Hot-Dip) on Iron and Steel Hardware, Specification for,
B 766		Electrodeposited Coatings of Cadmium, Specification for,

Exhibit C

TABLE HA-3100
ALLOWABLE MATERIALS

ASME Desig.	ASTM Desig.	Title
Plate, Sheet, and Strip		
...	A 167	Stainless and Heat Resisting Chromium Nickel Steel Plate, Sheet, and Strip
SA-240	A 240	Heat Resisting Chromium and Chromium Nickel Stainless Steel Plate, Sheet, and Strip for Pressure Vessels
SA-36	A 36	Structural Steel
...	A 283	Low and Intermediate Tensile Strength Carbon Steel Plates
...	A 284	Pressure Vessel Plates, Carbon Steel, Low and Intermediate Strength
...	A 366	Steel, Carbon, Cold-Rolled Sheet, Commercial Quality
SA-414	A 414	Carbon Steel Sheet for Pressure Vessels
...	A 446	Steel Sheet, Zinc Coated (Galvanized) by the Hot-Dip Process, Structural (Physical Quality)
...	A 525	Steel Sheet, Zinc Coated (Galvanized) by the Hot-Dip Process, General Requirements
...	A 526	Steel Sheet, Zinc Coated (Galvanized) by the Hot-Dip Process, Commercial Quality
...	A 527	Steel Sheet, Zinc Coated (Galvanized) by the Hot-Dip Process, Lock Forming Quality
...	A 568	General Requirements for Steel, Carbon, and High Strength, Low-Alloy, Hot-Rolled Sheet and Cold-Rolled Sheet
...	A 569	Steel, Carbon (0.15 max. %), Hot-Rolled Sheet and Strip, Commercial Quality
...	A 570	Hot-Rolled Carbon Steel Sheet and Strip, Structural Quality
...	A 611	Steel, Cold-Rolled Sheet, Carbon, Structural
...	A 620	Steel, Sheet, Carbon Drawing Quality, Special Killed, Cold-Rolled
...	A 621	Steel Sheet and Strips, Carbon, Hot-Rolled, Drawing Quality
...	A 635	Steel Sheet and Strips, Heavy Thickness Coils, Carbon, Hot-Rolled
...	A 642	Steel Sheet, Zinc Coated (Galvanized) by the Hot-Dip Process, Drawing Quality, Special Killed
...	A 666	Austenitic Stainless Steel Sheet, Strip, Plate, and Flat Bar for Structural Applications
SB-209	B 209	Aluminum and Aluminum-Alloy Sheet and Plate
	B 16	Standard Specification for Free Cutting Brass Rod, Bar, and Shapes for Screw Machines
	B 140	Standard Specification for Copper-Zinc-Lead (Leaded Red Brass or Hardware Bronze) Rod, Bar, and Shapes
Structural Bar and Shapes		
SA-36	A 36	Structural Steel
...	A 108	Steel, Bar, Carbon, Cold Finished, Standard Quality
...	A 276	Stainless and Heat Resisting Steel Bars and Shapes
...	A 493	Stainless and Heat Resisting Steel for Cold Heading and Cold Forging Bar and Wire
...	A 500	Cold-Formed Welded and Seamless Carbon Steel Structural Tubing in Round and Shapes
...	A 501	Hot Formed Welded and Seamless Carbon Steel Structural Tubing
...	A 576	Steel Bars, Carbon, Hot Wrought, Special Quality
Hardware		
SA-182	A 182	Forged or Rolled Alloy Steel Pipe Flanges, Forged Fittings, Valves, and Parts for High Temperature

(Continued)

228.11

0759670 0620828 603

TABLE HA-3100
ALLOWABLE MATERIALS (CONT'D)

ASME Desig.	ASTM Desig.	Title
Plate, Sheet, and Strip		
SA-193	A 193	Alloy Steel and Stainless Steel Bolting Material for High Temperature Service
SA-194	A 194	Carbon and Alloy Steel Nuts for Bolts for High Pressure and High Temperature Service
SA-307	A 307	Carbon Steel Bolts and Studs, 60,000 psi Tensile Strength
SA-325	A 325	High Strength Bolts for Structural Steel Joints
SA-403	A 403	Wrought Austenitic Stainless Steel Piping Fittings
SA-449	A 449	Quenched and Tempered Steel Bolts and Studs
...	A 548	Steel Wire, Carbon, Cold-Heading Quality, for Tapping or Sheet Metal Screws
...	A 563	Carbon Steel Nuts
		ANSI B18.21.1 Lock Washers
		ANSI B18.22.1 Flat Washers
...	F 467	Nonferrous Nuts for General Use
ANSI B18.21.1		Lock Washers
ANSI B18.22.1		Flat Washers
Pipe and Tube		
...	A 53	Pipe, Steel, Black and Hot-Dipped, Zinc Coated, Welded and Seamless
...	A 450	General Requirements for Carbon, Ferritic Alloy, and Austenitic Alloy Steel Tubes
	A 511	Seamless Stainless Steel Mechanical Tubing
	A 554	Welded Stainless Steel Mechanical Tubing
	A 312	Standard Specification for Seamless and Welded Austenitic Stainless Steel Pipes
	A 376	Standard Specification for Seamless Austenitic Stainless Steel Pipe for High Temperature Central Station Service
	A 632	Seamless and Welded Austenitic Stainless Steel Tubing (Small Diameter) for General Service
ANSI C80.3		Electrical Metallic Tubing Zinc Coated
Coatings		
	D 5144	Standard Guide for Protective Coating Standards in Nuclear Power Plants
Gaskets		
	ASTM D2000	Neoprene Class BC
	ASTM D1056	Silicone Rubber

Exhibit D

TABLE IA-3100
ALLOWABLE MATERIALS

ASME Desig.	ASTM Desig.	Title
Plate, Sheet, Strip		
...	A 167	Stainless and Heat-Resisting Chromium Nickel Steel Plate, Sheet, and Strip
SA-240	A 240	Heat-Resisting Chromium and Chromium Nickel Stainless Steel Plate, Sheet, and Strip for Pressure Vessels
...	A 366	Steel, Carbon, Cold-Rolled Sheet, Commercial Quality
SA-414	A 414	Carbon Steel Sheet for Pressure Vessels
	A 525	Steel Sheet, Zinc Coated (Galvanized) by the Hot-Dip Process, General Requirements
...	A 568	General Requirements for Steel, Carbon, and High Strength Low-Alloy Hot-Rolled Sheet and Cold-Rolled Sheet
...	A 570	Hot-Rolled Carbon Steel Sheet and Strip, Structural Quality
...	A 666	Austenitic Stainless Steel Sheet, Strip, Plate, and Flat Bar
SB-209	B 209	Aluminum and Aluminum and Aluminum-Alloy Sheet and Plate
Structural and Bar		
SA-36	A 36	Structural Steel
...	A 276	Stainless and Heat-Resisting Steel Bars and Shapes
...	B 187	Copper Bus Bar, Rod, and Shapes
Hardware		
SA-182	A 182	Forged or Rolled Alloy Steel Pipe Flanges, Forged Fittings, Valves, and Parts for High Temperature
SA-193	A 193	Alloy Steel and Stainless Steel Bolting Material for High Temperature Service
SA-194	A 194	Carbon and Alloy Steel Nuts for Bolts for High Pressure and High Temperature Service
SA-325	A 325	High Strength Bolts for Structural Steel Joints
SA-403	A 403	Wrought Austenitic Stainless Steel Piping Fittings
SA-449	A 449	Quenched and Tempered Steel Bolts and Studs
Pipe and Tube		
SA-312	A 312	Seamless and Welded Austenitic Stainless Steel Pipe
...	A 450	General Requirements for Carbon, Ferritic Alloy, and Austenitic Alloy Steel Tubes
...	A 511	Seamless Stainless Steel Mechanical Tubing
...	A 554	Welded Stainless Steel Mechanical Tubing
...	A 632	Seamless and Welded Austenitic Stainless Steel Tubing (Small Diameter) for General Service
...	B 68	Seamless Copper Tube, Bright Annealed
SB-75	B 75	Seamless Copper Tube

Exhibit D

STD-ASME AG-1-ENGL 1997 ■ 0759670 0603657 518 ■

TABLE IA-3100 (CONT'D)
ALLOWABLE MATERIALS

ASME Desig.	ASTM Desig.	Title
...	B 88	Seamless Copper Water Tube
...	B 210	Aluminum and Aluminum Alloy Drawn Seamless Tubes
Conduit-Plastic		
...	D 3485	Smooth Wall Coilable Polyethelene (PE) Conduit for Pre-Assembled Wire and Cable
Wire and Wire Insulation		
...	B 3	Soft or Annealed Copper Wire
...	B 8	Concentric Lay Stranded Copper Conductors, Hard, Medium Hard, or Soft
...	B 33	Tinned Soft or Annealed Copper for Electrical Purposes
...	B 105	Hard-Drawn Copper Alloy Wires for Electrical Conductors
...	B 206	Copper-Nickel-Zinc Alloy (Nickel Silver) Wire and Copper-Nickel Alloy wire
...	B 250	General Requirements for Wrought Copper Alloy Wire
...	D 2802	Ozone Resistant Ethylene-Propylene Insulation for Wire and Cable
...	D 4246	Ozone Resistant Thermoplastic Elastomer Insulation for Wire and Cable, 90°C Operation

STD.ASME AG-1-ENGL 1997 ■ 0759670 0603350 410 ■

TABLE SA-3400-1
ALLOWABLE MATERIALS

ASME Desig.	ASTM Desig.	Title
Carbon Steel Plates and Sheets		
...	A 283	Standard Specification for Low and Intermediate Tensile Strength Carbon Steel Plates
...	A 284	Standard Specification for Low and Intermediate Tensile Strength, Carbon-Silicon Steel Plates for Machine Parts and General Construction
...	A 366	Standard Specification for Steel Sheet, Carbon, Cold Rolled Commercial Quality
SA 414	A 414	Standard Specification for Steel, Sheet, Carbon, for Pressure Vessels
...	A 568	Standard Specification for Steel, Sheet, Carbon, and High-Strength Low-Alloy Hot-Rolled, and Cold-Rolled, General Requirements for
...	A 569	Standard Specification for Steel, Carbon (0.15 Maximum, Percent), Hot-Rolled Sheet and Strip, Commercial Quality
...	A 570	Standard Specification for Steel Sheet and Strip, Carbon, Hot-Rolled Structural Quality
...	A 611	Standard Specification for Steel, Sheet, Carbon, Cold-Rolled Structural
SA 620	A 620	Standard Specification for Steel, Sheet, Carbon, Drawing Quality, Special Killed, Cold-Rolled.
...	A 621	Standard Specification for Steel, Sheet, Carbon, Hot-Rolled, Drawing Quality
...	A 635	Standard Specification for Steel, Sheet and Strip, Commercial Quality, Heavy-Thickness Coils, Carbon, Hot-Rolled
...	A 659	Standard Specification for Steel, Carbon (0.16 Minimum to 0.25 Maximum Percent), Hot-Rolled Sheet and Strip, Commercial Quality
SA 36	A 36	Standard Specification for Structural Steel
Stainless Steel Plates and Sheets		
...	A 167	Standard Specification for Stainless and Heat Resisting Chromium-nickel Steel Plate, Sheet, and Strip
SA 240	A 240	Standard Specification for Heat Resisting Chromium and Chromium-nickel Stainless Steel Plate, Sheet, and Strip for Pressure Vessels
...	A 666	Standard Specification for Austenitic Stainless Steel, Sheet, Strip, Plate, and Flat Bar
Galvanized Steel Plates and Sheets		
...	A 446	Standard Specification for Steel Sheet, Zinc-Coated (Galvanized) by the Hot-Dip Process Structural (Physical) Quality
...	A 525	Standard Specification for General Requirements for Steel Sheet, Zinc-Coated (Galvanized) by the Hot-Dip Process
...	A 526	Standard Specification for Steel Sheet, Zinc-Coated (Galvanized) by the Hot-Dip Process, Commercial Quality.
...	A 527	Standard Specification for Steel Sheet, Zinc-Coated (Galvanized) by the Hot-Dip Process, Lock Forming Quality
...	A 528	Standard Specification for Steel Sheet, Zinc-Coated (Galvanized) by the Hot-Dip Process, Drawing Quality
...	A 591	Standard Specification for Steel Sheet, Electrolytic Zinc-Coated, for Light Coating Mass Applications
...	A 642	Standard Specification for Steel Sheet, Zinc-Coated (Galvanized) by the Hot-Dip Process, Drawing Quality, Special Killed

(Continued)

STD.ASME AG-1-ENGL 1997 ■ 0759670 0603351 357 ■

TABLE SA-3400-1
ALLOWABLE MATERIALS (CONT'D)

ASME Desig.	ASTM Desig.	Title
Carbon Steel Structural Members		
SA 36	A 36	Standard Specification for Structural Steel
...	A 106	Standard Specification for Seamless Carbon Steel Pipe for High Temperature Service
...	A 108	Standard Specification for Steel Bars, Carbon, Cold Finished, Standard Quality
...	A 500	Standard Specification for Cold-Formed Welded and Seamless Carbon Steel Structural Tubing in Rounds and Shapes
...	A 501	Standard Specification for Hot-Formed Welded and Seamless Carbon Steel Structural Tubing
...	A 575	Standard Specification for Steel Bars, Carbon, Merchant Quality, M-grades
...	A 576	Standard Specification for Steel Bars, Carbon, Hot-Wrought, Special Quality
Stainless Steel Structural Members		
...	A 276	Standard Specification for Stainless and Heat Resisting Steel Bars and Shapes
SA 312	A 312	Standard Specification for Seamless and Welded Austenitic Stainless Steel Pipes
SA 476	A 479	Standard Specification for Stainless and Heat Resisting Steel Bars, and Shapes for Use in Boilers and Other Pressure Vessels
...	A 511	Standard Specification for Seamless Stainless Steel Mechanical Tubing
...	A 554	Standard Specification for Welded Stainless Steel Mechanical Tubing
Galvanized Steel Pipe and Conduit		
...	A 53	Standard Specification for Pipe, Steel, Black and Hot-Dipped, Zinc-Coated, Welded and Seamless
	ANSI C80.3	Electrical Metallic Tubing, Zinc-Coated
Stainless Steel Bolts and Nuts		
SA 193	A 193	Standard Specification for Alloy-Steel and Stainless Steel Bolting Materials for High Temperature Service
SA 194	A 194	Standard Specification for Carbon and Alloy Steel Nuts for Bolts for High Pressure and High Temperature Service
...	A 320	Standard Specification for Alloy Steel Bolting Materials for Low Temperature Service
...	A 493	Standard Specification for Stainless and Heat Resisting Steel for Cold Heading and Cold Forging
...	ANSI B18.21.1	Lockwashers (Inch series)
...	ANSI B18.22.1	Plain Washers

(Continued)

STD.ASME AG-1-ENGL 1997 ■ 0759670 0603352 293 ■

TABLE SA-3400-1
ALLOWABLE MATERIALS (CONT'D)

ASME Desig.	ASTM Desig.	Title
Carbon Steel Bolts and Nuts		
SA 193	A 193	Standard Specification for Alloy-Steel and Stainless Steel Bolting Materials for High Temperature Service
SA 194	A 194	Standard Specification for Carbon and Alloy Steel Nuts for Bolts for High Pressure and High Temperature Service
SA 307	A 307	Standard Specification for Carbon Steel Bolts and Studs
SA 325	A 325	Standard Specification for High Strength Bolts for Structural Steel Joints
SA 449	A 449	Standard Specification for Quenched and Tempered Steel Bolts and Studs
...	A 548	Standard Specification for Steel Wire, Carbon, Cold Heading Quality, for Tapping and Sheet Metal Screws
...	A 563	Standard Specification for Carbon and Alloy Steel, Steel Nuts
...	ANSI B18.21.1	Lockwashers (Inch Series)
...	ANSI B18.22.1	Plain Washers
Aluminum Material — Grilles, Registers, Diffusers		
...	B 209	Standard Specification for Aluminum and Aluminum Alloy Sheet and Plate
...	B 221	Standard Aluminum and Specification for Aluminum-Alloy Extruded Bars, Rods, Wire, Shapes, and Tubes
SB 308	B 308	Standard Specification for Aluminum-Alloy, 6061-T6 Standard Structural Shapes
Zinc Coatings		
...	A 123	Standard Specification for Zinc (Hot-Dip Galvanized) Coatings on Iron and Steel Products
...	A 153	Standard Specification for Zinc Coating (Hot-Dip) on Iron and Steel Hardware
...	B 633	Standard Specification for Electro-deposited Coatings of Zinc on Iron and Steel

NOTE:
Unless specified otherwise, the effective date of specifications listed above is the latest approved revision. Where ASTM materials are specified, the equivalent ASME material specification may be substituted.

Exhibit F

ASME N509 89 ■ 0759670 0050564 6 ■

TABLE 4-1 INSTRUMENTATION FOR ESF AIR-CLEANING UNITS

Sensing Location (Note (1))	Readout/Alarm Location: Local	Readout/Alarm Location: Remote Manned Control Panel	
Unit Inlet (High Velocity Portion)	F(I) alternately at location No. 16; T(I) alternately at location No. 2 or No. 4	F(AH, AL) alternately at location No. 16	
Space	...	...	
Demister	ΔP(I,AH*) (NOTE (2))	...	
Space	...	...	
Electric Heating Coil	SL	...	
Space	T(I,AL,AH)	T(I,AH,AL,AT)	ΣP(AH) optional (Note (4))
Prefilter	ΔP(I,AH)	...	
Space	...	...	
Pre-HEPA	ΔP(I,AH)	ΔP(AH)	
Space	...	...	
Adsorber	...	...	
Space	T(I,AH-2 STAGE) (Note (3))	T(I,AH-2 STAGE) (Note (3))	
Postfilter	ΔP(I,AH)	...	
Space	...	...	
Fan	HS* SL* (Note (2))	HS,SL	
Unit Outlet (High Velocity Portion)	See location No. 1	See location No. 1	
Valve/Damper Operator	SL* (Note (2))	SL	
Fire Protection System	I,AT (Note (5))	AT (Note (5))	

Parameters (A) (Note (6))	Instrument Function (x) (Note (6))	
F = Flow	I = Indication	SL = Status Indication
T = Temperature	AH = High Alarm	HS = Handswitch
ΔP = Differential Pressure	AL = Low Alarm	R = Record
ΣΔP = Summation Alarm (ΔP)	AT = Trip Alarm	

NOTES:

(1) The "Sensing Location" indicates the location within an air treatment unit where the specified sensors shall be located. The components are listed in the sequence they are typically used, with "Space" indicating the component between two components.

(2) All instruments are required except those marked with an (*) which are recommended.

(3) 1st Stage signals an alarm only, 2nd stage signals an alarm and permits manual actuation of fire protection system.

(4) Total air-cleaning unit ΔP alarm is optional if each component whose pressure drop is subject to change over time has individual alarm or indication in Main Control Room.

(5) Manual valves are recommended with local indication at valve. Power actuated valves, if used, shall have local handswitches, and indication; and trip alarms on local and remote manned control panels. Flow of extinguishing agent shall be alarmed on local and remote-manned control panels.

(6) A(x): Measurement of parameter A requires instrument function x.

Exhibit F

TABLE 4-2 INSTRUMENTATION FOR NON-ESF AIR-CLEANING UNITS

Sensing Location (Note (1))	Readout/Alarm Location: Local (Note (2))	Readout/Alarm Location: Remote Manned Control Panel
Unit Inlet (High Velocity Portion)	F(I) alternately at location No. 16, T(I) alternately at location No. 2 or 4	
Space	...	...
Demister (if applicable)	ΔP(I,AH*) (Note (3))	...
Space	...	...
Electric Heating Coil	SL	...
Space	T(AH,AL,AT)	...
Prefilter	ΔP(I,AH) (Note (3))	...
Space	...	...
Pre-HEPA	ΔP(I,AH*) (Note (3))	...
Space	...	...
Adsorber	...	...
Space	T(I,AH-2 STAGE) (Note (4))	T(I,AH-2 STAGE) (Note (4))
Postfilter	ΔP(I)	...
Space	...	...
Fan	HS,S	L
Unit Outlet (High Velocity Portion)	See location No. 1	...
Valve/Damper Operator	SL* (Note (3))	...
Fire Protection System	(Note (5))	(Note (5))

Parameters (A) (Note (6))	Instrument Function (x) (Note (6))	
F = Flow	I = Indication	SL = Status Indication
T = Temperature	AH = High Alarm	HS = Handswitch
ΔP = Differential Pressure	AL = Low Alarm	R = Record
	AT = Trip Alarm	

NOTES:

(1) The "Sensing Location" indicates the location within an air treatment unit where the specified sensors shall be located. The components are listed in the sequence they are typically used, with "Space" indicating the component between two components.

(2) For air-cleaning units located inside containment, the requirement for LOCAL controls for handswitches, flow indication, and alarms for high differential pressure, low and high flow and high temperature shall mean controls shall be located on a panel located outside containment.

(3) All instruments are required except those marked with an (*) which are recommended.

(4) 1st Stage signals an alarm only, 2nd stage signals an alarm and permits manual actuation of fire protection system.

(5) See Note (4) in Table 4-1.

(6) A (x): Measurement of parameter A requires instrument function x.

TABLE 5-2 DAMPER CLASSIFICATION FOR CONSTRUCTION AND LEAKAGE

Function of Damper (Note (1))	Construction Class (Note (2))	Leakage Class (Note (3))
Flow control	B	III
Pressure control	B	III
Balancing	B	IV
Shutoff		
(a) Contaminated air stream	A,B	I
(b) Noncontaminated air stream (Note (4))	B	II
Isolation		
(a) Contaminated air stream	A,B	I
(b) Noncontaminated air stream (Note (4))	B	II
Backdraft prevention		
(a) Contaminated air stream	B,A	I,II
(b) Noncontaminated air stream (Note (4))	B	II
Pressure relief	B	II

NOTES:
(1) Where a damper serves more than one function, for example, flow control and shutoff, then the more stringent leak class governs.
(2) Refer to para. 5.9.1.3.
(3) Refer to para. 5.9.1.4.
(4) Where the calculated biological effects on complete damper failure are within governmental guidelines for continuous exposure, the air stream may be considered noncontaminated.

TABLE 5-3 MAXIMUM PERMISSIBLE DAMPER LEAK RATE, CLASS II AND III

Damper Blade Length or Diameter, in.	Maximum Permissible Leak Rate scfm/sq ft of Damper Face Area, at 1 in. w.g. Differential Pressure (Note (1))	
	Leakage Class II	Leakage Class III
12	15	60
24	10	40
36	8	32
48	8	32

NOTE:
(1) Interpolation may be used for other blade lengths. Extrapolation is not recommended.

Exhibit F

TABLE 5-4 MULTIPLYING FACTORS FOR OBTAINING MAXIMUM PERMISSIBLE LEAKAGE RATES AT HIGHER PRESSURES

Differential Pressure, in. w.g.	Multiplier [Note (1)]
2	1.4
3	1.7
4	2.0
5	2.2
6	2.4
7	2.6
8	2.8
9	3.0
10	3.2
11	3.3
12	3.5

NOTE:
(1) Multiplier = (differential pressure, in. w.g.)$^{1/2}$ which is applied to leakage noted in Table 5-3.

Exhibit F

TABLE 9-1 SUMMARY OF CRITERIA FOR ACCEPTANCE TESTING

N510 Test	N510 Section	Information and Acceptance Criteria Provided by System Engineer	N509 Reference
Visual Inspection	5	None required from system engineer	5.6.5.2
Housing Leak Test	6	Test pressure(s) and tolerance	4.6.4
		Maximum allowable leakage at test pressure boundary to be tested	4.14, 4.2
Mounting Frame Leak Test	7	Identification of frames to be tested	5.6.5.3
		Test pressure(s) and tolerance	4.6.4
		Maximum allowable leakage	4.14
Duct Leak Test	8	Boundaries to be tested, applicable test pressure (and tolerance), and maximum allowable leakage	4.14, 4.2, 4.6.4
		Justification for duct test exceptions	5.10.8
Airflow Capacity and Distribution	8	Required minimum design airflow rate for each operating mode	4.14, 4.2
		Maximum allowable airflow rate	4.14, 4.2
		Design flow rate	4.2
		Minimum filter housing pressure drop with clean filter components and test pressure tolerance	4.2
		Maximum filter housing pressure drop with coincident dirty filter pressure drop and test pressure tolerance	4.2
Air-Aerosol Mixing Uniformity	9	Design airflow rate	4.2
In-Place HEPA Leak Test	10	Design airflow rate	4.2
		Maximum (dirty) and minimum (clean) filter bank pressure drop	4.2
		Maximum allowable penetration	PSAR/FSAR/Technical Specification
In-Place Adsorber Leak Test	11	Design airflow rate	4.2
		Maximum allowable penetration	PSAR/FSAR/Technical Specification

Exhibit F

TABLE 9-1 SUMMARY OF CRITERIA FOR ACCEPTANCE TESTING (CONT'D)

N510 Test	N510 Section	Information and Acceptance Criteria Provided by System Engineer	N509 Reference
Duct Damper Bypass Test	12	Test boundary to be tested	4.14
		Design airflow rate	4.2
		Operating pressure differential across damper	4.6
		Maximum allowable penetration	4.14
System Bypass Test	13	Test boundary to be tested	4.14
		Design airflow rate	4.2
		Operating pressure differential	4.6
		Maximum allowable penetration	4.14
Air Heater Performance Test	14	Design airflow rate	4.2
		Design capacity	4.2
		Design temperature differential (leaving temperature — entering)	4.2
		Design current (amps), each circuit at design voltage	6.5
Laboratory Testing of Adsorbent	15	Design airflow rate	4.2
		Bed thickness	4.2, 5.2
		Design velocity	4.14, 5.2
		Minimum residence time	PSAR/FSAR/Technical Specification
		Test conditions	PSAR/FSAR/Technical Specification
		Maximum allowable penetration	PSAR/FSAR/Technical Specification

Exhibit G

TABLE 1 TESTS AND INSPECTIONS WITH RECOMMENDED FREQUENCIES

Test	Section of Standard	Recommended Frequency (Note (1))
Visual inspection	5	Before each test series (Note (2))
Duct leak test	6	Acceptance (Note (3))
Structural capability test	6	Acceptance (Note (3))
Housing leak test	6	Acceptance and at least once each 10 years (Note (3))
Mounting frame pressure leak test	7	Optional (Note (4))
Airflow capacity and distribution	8	Acceptance (Note (3)) Surveillance (Note (5))
Air–aerosol mixing uniformity test	9	Acceptance (Note (3))
In-place leak test, HEPA filters	10	Acceptance, after each HEPA filter replacement and at least once each operating cycle (Notes (3), (6))
In-place leak test, adsorbers	11	Acceptance, after each adsorber replacement and at least once each operating cycle (Notes (3), (6))
Duct damper bypass test	12	Acceptance and at least once each operating cycle (Notes (3), (6))
System bypass test	13	Acceptance and at least once each operating cycle (Notes (3), (6))
Air heater performance test	14	Acceptance and at least once each operating cycle (Note (3))
Laboratory tests of adsorbent	15	Acceptance, before each adsorber replacement, and at least once each operating cycle (Notes (3), (7), (8))

NOTES:
(1) Field test of motors, valve and damper actuators, and fire protective systems are not covered by this Standard.
(2) Frequency of verifying loop seals and traps shall be evaluated by the owner to assure integrity at all times.
(3) Acceptance tests to be made after completion of initial construction and after any major system modification or repair.
(4) The mounting frame leak test is a recommended, but optional test which serves to identify mounting frame leakage which would be included as a part of total bank leakage during HEPA filter bank and adsorber bank in-place leak tests. In many cases, a thorough visual inspection of the mounting frame ensures the mounting frame leakage component of total bank leakage will be minimal. It is left up to the owner to determine whether a mounting frame leak test is warranted based upon the visual examination.
(5) Airflow capacity for surveillance purposes is performed prior to any in-place leak test per para. 8.6.1.2.
(6) Periodic in-place leak tests of systems located within reactor containments and used only for 100% recirculation are not necessary.
(7) Adsorbents must be tested before installation or replacement to establish efficiency. Samples for laboratory testing should be taken before the routine in-place testing of the installed system to verify the condition of the adsorbent.
(8) Adsorbent is sampled and laboratory tests shall be made to confirm performance at intervals not exceeding 720 hr of system operation or for any system immediately following inadvertent exposure to solvent, paints, or other organic fumes or vapors which could degrade the performance of the adsorbent. The 720 hr requirement may be modified based on laboratory test history.

DMM technology

amec

TECHNICAL SPECIFICATION

PROJECT:	Final DBVS Design	145579-D-SP-036	REV. 1
PROJECT NO.:	145579	OFF-GAS TREATMENT SYSTEM HEPA FILTER SKID ASSEMBLY DESIGN AND FABRICATION	
CLIENT:	AMEC E&E - Richland, Washington		

Appendix C

Example Data Sheets

Title	Number of Pages
Cover Page	1
Control Valves, Example	1
Valves (Full Port Ball Valve 300# Class), Example	1
Filter DP, Example	1
Distribution Panel (120/240V ac, single phase), Example	1
Nonfused Disconnect Switch, Example	1
Total Data Sheet Pages:	6

amec

Control Valves				SPEC. No. 145579-D-SP-036		
NO.	BY	DATE	REVISION	SHEET 1	OF 1	DATE 12/16/2004
				BY JI	CHK'D	APPR.
				P.O.		
				REQ.		

Project: Demonstration Bulk Vitrification Project

1 Tag No.: DBVS-HEPA-HV-xxx Service: HEPA Sys P&ID : DBVS-SK-P102
Fluid Code: Desc. : Line no.:

		Units	Max Flow	Norm Flow	Min Flow	Shut Off	
2	* Flow rate	ACFM				-	
3	* Inlet Pressure P1	in w.g.			0		
4	* Outlet Pressure P2	in w.g.			0		
	* Differential Pressure dP = P1 - P2	in w.g.			0		
5	* Inlet Temperature	F					
6	Spec.Weight / Spec.Gravity / Mol. Weight		1/18	1/18	1/18	-	
7	Viscosity / Specific Heats Ratio	cp	0.02/1.4	0.02/1.4	0.02/1.4	-	
8	Vapor Pressure Pv / Crit Press PC					-	
9	* Required Cv			10400		-	Flow Thru
10	* Travel	%				0	
11	* Predicted Sound press. level (at 1 m.)	dBA				-	Max. 85 dbA
12	Compressibility (Z)						
	Solids conc. / Particule size			0%			

SERVICE CONDITIONS

LINE

13 Pipe Line Size In 16" Out 16"
14 Pipe Sch./W.thick. In 10 Out 10
15 Mater'l A312 ANSI Ins.

VALVE BODY / BONNET

16 * Type Butterfly Valve * Std / Full port Full
17 * Size 16" ANSI class 150#
18 * Valve max P / T°
19 * Manufacturer Keystone Series
* Model Seller Selected (e.g. K-Lok Fig 360-134)
20 * Body / Bonnet Mater'l ASTM A351 CF8M (2)
21 * Liner Mater'l / In.Diam.
22 End In 16" Flange
23 Connection Out 16" Flange
24 Flange Face Finish
* Face to Face dim.
25 End Ext / Mater'l
26 * Flow Direction
27 * Type of Bonnet
28 * Lube & Iso Valve * ISO
29 * Packing Material RTFE
30 * Packing Type

TRIM

32 * Type
33 * Size * Rated Travel
34 * Characteristic
35 * Balanced / Unbalanced
36 * Rated * Cv * FL * Xt
37 * Plug/Ball/Disk Matr'l 316 SS
38 * Seat Material Buna-N
39 * Cage/Guide Mtr'l
40 * Stem Material Nitronic 50
41

ACCESS.

43 NEC Class Group Div.
44
45

ACTUATOR

53 * Type Pneumatic/Spring Return
54 * Manufacturer Keystone Series
* Model Seller Selected (e.g. Keystone F453+F79U.)
55 * Size Seller * Eff Area
57 Action Open / Close / Lock
58 * Max Allowable Press. 125 psig
59 * Min Required Press. 100 psig
60 Available Air Supply Pressure :
61 Max Min
62 * Bench Range /
63 Actuator Orientation
64 Handwh'l Type
65 Air Failure Valve Set at
66 Fail Closed

POSITIONER

67 Input Signal
68 * Type
Smart Communic.
69 * Mfr & Model Keystone Series
70 * On Incr. Signal, Output: Incr. / Decr.
71 Gauges By pass
72 * Cam Charact's.
73 * Air Port size * Boosters

SWITCHES

74 Type 24VDC Proximity (3) Quantity 2
75 * Mfr & Model Keystone Series
76 Nb. contacts / rating
77 Actuation Points
78

AIR SET

79 * Mfr & Model
80 * Set Press.
81 Filter Gauge

TESTS

83 * Hydro Pressure per ASME B16.34
84 ANSI / FCI Leak. Class per ASME N509, sect.5.9.7
85 Test Results submittals required

NOTES

47 1) 100 to 125 psig Compressed air is available
48 2) CMTRs Required if Available
49 3) The solenoid valve (if used) and proximity sensor shall be in NEMA 4 enclosures.
50

S20.50

* : Information supplied by Seller unless already specified.

amec

Valves					SPEC. No. 145579-D-SP-036		
NO.	BY	DATE	REVISION		SHEET 1	OF 1	DATE 12/16/2004
					BY JI	CHK'D	APPR.
					P.O.		
					REQ.		

Project: Demonstration Bulk Vitrification Project

1. Type: FULL PORT BALL VALVE, 300# CLASS
2. Body Size: 1"
3. Body Material: Seller Selected (e.g. Carbon Steel, WCB)
4. Port Size: FULL PORT
5. Number of Ports: 2
6. Guiding:
7. End Conn/Rating: Seller Selected (e.g. 1" Extended Butt Weld for Sch 40 Pipe)
8. Packing Material/Type: UHMWPE
9. Lubricator:
10. Iso Valve:
11. Bonnet Type:
12. Trim From: 316 SS Ball
13. Trim Material Seat/Plug: UHMWPE w/ Cavity Filled Seats
14. Shaft Material: 316 SS
15. Required Seat Tightness: B16.34
16. Max Allow Sound Level dBA: 65 dba

Design Pressure:
Design Temperature:

17. MFR: FLOWTEK TRIAD SERIES
18. Model No.: Seller Selected (e.g. 1"-FP-2-3-04-3-U-G-L, UHWPE Cavity Filled)
19. Flow Composition: Water
20. Required Cv: 120 (Flow thru)
21. Inlet Press Norm/Max:
22. Flow Rate Norm/Max:
23. dP/Max Shut Off dP:
24. Temp Oper/Max:
25. Oper sp gr/Visc: 1 / 1 cp
26. % Superheat/Flash:
27. Crit Press/% Solids:
28. Mol Wt/Vapor:
29. Pred. Sound Level dBA:
30. Supplier: UNIT PROCESS COMPANY
31. Address: Royal City, WA
32. Phone: (509) 346-9920
33. Fax: (509) 346-9951

Rev.	Tag. No.	Line no. /Equip.	P&ID	Dia.Seat Matr'l	T° Max.	Pressure Norm.	Pressure Max.	Pressure Range	Service	Notes
	DBVS-HEPA-V-XXX		DBVS-SK-P102						Filtered Water, Condensate	

NOTES
Shell and seat test required with test report per ASTM B16.4, MSS-SP-61 and MSS-SP-72.

S20.41

145579-D-SP-036_Data_Sheets.xls

amec AMEC E&C Services Limited Trail, BC Canada	Instrumentation Data Sheet

ASSET NUMBER: 145579-D-SP-036 **TAG NUMBER: 36-PDIS-XXX**

SUBJECT:	Bulk Vitrification HEPA Filter System		
SERVICE:	Filter DP		
SUPPLIER:			
MAKE:	Dwyer	P.O. No.:	
MODEL:	Series 3000 Photohelic Pressure Switch/Gage	P&ID No.:	DBVS-SK-P102

TRANSMITTER

		Power Supply:	24V dc
Model No.:	3310MRS Photohelic	Output:	
Range:	0-10 in H_2O	Relay Output:	PDAH (TBD)
Calibrated Range:	0-10 in H_2O	Local Indication:	0-10 in H_2O
Case Material:	Aluminum (hammerloid finish)	Conduit Connect:	
Enclosure Rating:		Mounting Bracket:	

TRANSDUCERS

Model No.:	3310MRS-0-10-24V dc	
Line Material:	SS	
Line Size/Sch'd:		
Transducer Mat'l.:		
Process Connection:		
Signal Cable Length:		
Mounting.:	Vertical	
Classification:		

316SS Tags permanently affixed to instrument:

OPTIONS

Accuracy 0.25% span or better
Display to read in "in H_2O"
Weather-proof housing

SERVICE CONDITIONS:

Line No./Size/Sch		Max. Velocity:	
Fluid:	Air	Spec. Gravity:	
Flow:		Acidity:	
Temp Min.:		Percent Solids:	
Temp Oper.:		Material Build-Up:	
Temp Max.:		Vibration:	
Press Oper.:	0-10 inH_2O	Line Material:	
Press Max.:			

NOTES:

1. The Buyer has reviewed the transmitters offered and found that the following ordering information from Dwyer Instruments, Series 3000 Photohelic model 3310MRS-0-10-24VDC may be suitable. In any case, the final selection the component is the responsibility of the Seller as this is provided for information only.

By: RW	Chk:	Appd.	Date: 101504	Project: DBVS	Rev: 0

amec

Distribution Panel				SPEC. No. 145579-D-SP-036		
NO.	BY	DATE	REVISION	SHEET 1	OF 1	DATE 12/16/2004
				BY JJI	CHK'D	APPR.
				P.O.		
				REQ.		

Project: Demonstration Bulk Vitrification Project

1. Volts	120/240V ac, single-phase	9. MFR.	
2. Amps		10. Model No.	
3. Breaker type	Bolt-on		
4. Main Breaker	yes		
4.a. Amps (trip)			
4.b. MFR			
4.c. Model No.			
5. Therm. Mag. breakers	yes		
5.a. MFR			
5.b. Model No.			
6. GFCI breakers	yes		
6.a. MFR			
6.b. Model No.			
7. GFPE breakers	yes		
7.a. MFR			
7.b. Model No.		11. Supplier	
8. Documentation	detailed panel schedule, inside door	12. Address	
9. Enclosure	NEMA 4	13. Phone	
		14. Fax	

Rev.	Tag. No.	Line no. /Equip.	P&ID							Notes

NOTES

S20.41

145579-D-SP-036_Data_Sheets.xls

	Nonfused Disconnect Switch				SPEC. No. 143643-D-SP-036		
	NO.	BY	DATE	REVISION	SHEET 1	OF 1	DATE 12/16/2004
					BY JJI	CHK'D	APPR.
					P.O.		
Project: Demonstration Bulk Vitrification Project					REQ.		

1. Volts: 480V ac
2. Amps (frame):
3. Poles: 3
4. Enclosure: NEMA 4
5. Options: 1 NO, 1 NC auxiliary contact (for motor circuits only)
6. MFR.
7. Model No.
8. Supplier.
9. Address
10. Phone
11. Fax

Rev.	Tag. No.	Line no. /Equip.	P&ID							Notes

NOTES:

Alternate MFR: HMD-Kontro MMA 1.5x1x6H

Performance and Dimensions shall be in accordance with ANSI B73.M, and HI-3.1 through 3.6.

S20.41

DMM technology

amec

TECHNICAL SPECIFICATION

PROJECT:	Final DBVS Design	145579-D-SP-036	REV. 1
PROJECT NO.:	145579	OFF-GAS TREATMENT SYSTEM HEPA FILTER SKID ASSEMBLY DESIGN AND FABRICATION	
CLIENT:	AMEC E&E - Richland, Washington		

Appendix D

Bidder's Drawing and Data Commitments

(4 pages including cover)

DMJM technology

amec

TECHNICAL DATA SHEETS

PROJECT:	Final DBVS Design	145579-D-DS-036.1	REV. 1
PROJECT NO.:	145579	OFF-GAS TREATMENT SYSTEM HEPA FILTER SKID ASSEMBLY DESIGN AND FABRICATION	
CLIENT:	AMEC E&E - Richland, Washington	EQUIPMENT NO.: 36-D58-003	

BIDDER'S DRAWING AND DATA COMMITMENTS

Vendor shall supply all drawings, manuals and documentation in the quantities indicated. Approval drawings are due within the listed number of calendar days after issue of the Purchase Order or Letter of Intent. The dates set out for drawing and data submissions are governed by the engineering design schedule of the project. The Vendor shall supply one Autocad disk file and requested number of copies within the listed number of calendar days. Final drawings must be certified as correct and bear the Vendors name, equipment number and Purchase Order Number. **Drawing Transmittals listing the document numbers, revison numbers, quantities, status and document types must be included with all submissions (including electronic submittals)**

SEND ALL DOCUMENTS TO:

Submit all documents via courier service
Faxed documents must be followed by the originals.
Electronic E-mail or FTP transmissions of drawings & data must be copied to Document Control
Always include a transmittal

DMJMH+N, Inc.
dba DMJM Technology
3250 Port of Benton Blvd
Richland, WA 99354-1670
Attn: Project Records
Phone: (509) 375-7856
Fax: (509) 375-5331

BIDDERS MUST PROVIDE ESTIMATED LEAD TIMES FOR APPROVAL DRAWINGS

Proposal — Bidder shall include this data for each item
Review — Required before ordering or start of fabrication
Final — Required within 7 days prior to shipment and before final payment

PROPOSAL	REVIEW	FINAL	DESCRIPTION	REVIEW ITEMS DUE WITHIN (DAYS)	VENDOR COMMITMENT (DAYS)
E+3			Proof of NQA-1 or equivalent QA program		
E+3			Experience list and maintainability information		
E+3			Completed data sheet		
E+3			Subcontractor list		
E+3	E+3		Design, fabrication & delivery schedule	PO+7	
	E+3	E+6	90% Design and Fabrication Package including: - Drawings - Calculations - Completed Equipment Data Sheets - Vendor Cut Sheets/Technical Brochers - Bill of materials	PO+21	
	E+3	E+1	Test Plan/Test Procedure	PO+21	
	E+1	E+1	NDE personnel certifications	PO+21	
	E+1	E+1	Visual Weld/NDE procedures	PO+21	
	E+1	E+1	Visual weld examination procedure/weld map	Fab-10	
	E+3	E+1	Welding procedures, procedure qualification records, and welder procedure qualification records	Fab-10	
	E+3	E+1	AWS CWI certificate	Fab-10	
	E+3	E+1	Material Control Procedures	Fab-10	
	E+3	E+3	Protective coating specifications	Fab-10	
	E+3	E+1	Fabrication travelers	Fab-10	
	E+3	E+1	Cleaning procedures	Fab-10	

DMJM technology

amec

TECHNICAL DATA SHEETS

PROJECT:	Final DBVS Design	145579-D-DS-036.1	REV. 1
PROJECT NO.:	145579	OFF-GAS TREATMENT SYSTEM HEPA FILTER SKID ASSEMBLY DESIGN AND FABRICATION	
CLIENT:	AMEC E&E - Richland, Washington	EQUIPMENT NO.: 36-D58-003	

BIDDER'S DRAWING AND DATA COMMITMENTS

Vendor shall supply all drawings, manuals and documentation in the quantities indicated. Approval drawings are due within the listed number of calendar days after issue of the Purchase Order or Letter of Intent. The dates set out for drawing and data submissions are governed by the engineering design schedule of the project. The Vendor shall supply one Autocad disk file and requested number of copies within the listed number of calendar days. Final drawings must be certified as correct and bear the Vendors name, equipment number and Purchase Order Number. **Drawing Transmittals listing the document numbers, revison numbers, quantities, status and document types must be included with all submissions (including electronic submittals)**

SEND ALL DOCUMENTS TO:

Submit all documents via courier service
Faxed documents must be followed by the originals.
Electronic E-mail or FTP transmissions of drawings & data must be copied to Document Control
Always include a transmittal

DMJMH+N, Inc.
dba DMJM Technology
3250 Port of Benton Blvd
Richland, WA 99354-1670
Attn: Project Records
Phone: (509) 375-7856
Fax: (509) 375-5331

BIDDERS MUST PROVIDE ESTIMATED LEAD TIMES FOR APPROVAL DRAWINGS

Proposal	Bidder shall include this data for each item			REVIEW ITEMS DUE WITHIN	VENDOR COMMITMENT
	Review	Required before ordering or start of fabrication			
		Final	Required within 7 days prior to shipment and before final payment		
PROPOSAL	REVIEW	FINAL	DESCRIPTION	(DAYS)	(DAYS)
	E+3	E+6	100% Design and Fabrication Package including: - Mechanical, Structural and Electrical Drawings - Mechanical, Structural and Electrical Calculations - Completed Equipment Data Sheets - Vendor Cut Sheets/Technical Brochers - Bill of materials	PO+21	
	E+3	E+1	NCR's	When identified +3	
	E+3	E+3	Fabrication red-line changes	When identified	
	E+3	E+1	Preliminary Data Package Including: - As-Built Drawings and Weld Maps - Fabrication Travler Closeout - Recommended spare parts and frequency of replacement - Rigging sketches - System assembly instructions - Operation and maintenance manuals - Completed Test results (document and video records) - Packing list and identification of shipping supports - Field Calibration Procedures and Reports - Inspection Reports - CoC's / CMTRs - NEC inspection certificate & electromagnetic interference test results	Prior to FAT	

DMJM technology

amec

TECHNICAL DATA SHEETS

PROJECT:	Final DBVS Design	145579-D-DS-036.1	REV. 1
PROJECT NO.:	145579	OFF-GAS TREATMENT SYSTEM HEPA FILTER SKID ASSEMBLY DESIGN AND FABRICATION	
CLIENT:	AMEC E&E - Richland, Washington	EQUIPMENT NO.: 36-D58-003	

BIDDER'S DRAWING AND DATA COMMITMENTS

Vendor shall supply all drawings, manuals and documentation in the quantities indicated. Approval drawings are due within the listed number of calendar days after issue of the Purchase Order or Letter of Intent. The dates set out for drawing and data submissions are governed by the engineering design schedule of the project. The Vendor shall supply one Autocad disk file and requested number of copies within the listed number of calendar days. Final drawings must be certified as correct and bear the Vendors name, equipment number and Purchase Order Number. Drawing Transmittals listing the document numbers, revison numbers, quantities, status and document types must be included with all submissions (including electronic submittals)

SEND ALL DOCUMENTS TO:

Submit all documents via courier service
Faxed documents must be followed by the originals.
Electronic E-mail or FTP transmissions of drawings & data must be copied to Document Control
Always include a transmittal

DMJMH+N, Inc.
dba DMJM Technology
3250 Port of Benton Blvd
Richland, WA 99354-1670
Attn: Project Records
Phone: (509) 375-7856
Fax: (509) 375-5331

BIDDERS MUST PROVIDE ESTIMATED LEAD TIMES FOR APPROVAL DRAWINGS

Proposal	Bidder shall include this data for each item			REVIEW ITEMS DUE WITHIN	VENDOR COMMITMENT
	Review	Required before ordering or start of fabrication			
		Final	Required within 7 days prior to shipment and before final payment		
PROPOSAL	REVIEW	FINAL	DESCRIPTION	(DAYS)	(DAYS)
	E+3	E+1	Packaging and Shipping Plan	Del-21	
	E+3	E+1	Final Data Package including: - Approved Preliminary Data Package - Final FAT results	Del-10	

Electronic Copy: PO Date + Lead Time = Due Date; Due Date - 7 Days = Due Date; Due within xx days of delivery; COMP = Due within xx days of completion

THE TIMELY RECEIPT OF THE VENDOR DOCUMENTS IS CRITICAL TO THIS PROJECT.

Buyer commits to a 15 working day turnaround cycle after reciept of approval documents.

I agree to provide the listed documentation and data and the dates shown above.

Vendor Signature _____ Date _____

DMJM technology

amec

TECHNICAL SPECIFICATION

PROJECT:	**Final DBVS Design**	**145579-D-SP-036**	**REV. 1**
PROJECT NO.:	**145579**	**OFF-GAS TREATMENT SYSTEM HEPA FILTER SKID ASSEMBLY DESIGN AND FABRICATION**	
CLIENT:	**AMEC E&E - Richland, Washington**		

Appendix E

TFC-ESHQ-Q_C-C-03, Revision B, *Control of Suspect/Counterfeit Items*

(53 pages including cover)

TABLE OF CONTENTS

1.0 PURPOSE AND SCOPE 2
2.0 IMPLEMENTATION 2
3.0 RESPONSIBILITES 2
3.1 Procurement Personnel 2
3.2 Inspection Personnel 2
3.3 Quality Assurance Engineer 2
3.4 S/CI Coordinator 2
3.5 Assigned Engineering Personnel 3
3.6 Responsible Managers and Supervisors 3
4.0 PROCEDURE 3
4.1 Introduction 3
4.2 Procurement 3
4.3 Inspection for Potential S/CI 4
4.4 Control of Material Identified as S/CI 4
4.5 Reporting of S/CI 5
4.6 Acceptance, Removal, and Disposition of S/CI 5
4.7 Surplus/Excess Material 7
4.8 Assessments 7
4.9 Training 7
5.0 DEFINITIONS 8
6.0 RECORDS 9
7.0 SOURCES 9
7.1 Requirements 9
7.2 References 9

TABLE OF FIGURES

Figure 1. Management of Suspect/Counterfeit Items. 11

TABLE OF ATTACHMENTS

ATTACHMENT A - SUSPECT COMPONENTS LIST 12
ATTACHMENT B - CLASSIFICATION OF POTENTIALLY SUSPECT/COUNTERFEIT ITEMS 30
ATTACHMENT C - SUSPECT/COUNTERFEIT ITEMS INFORMATION SOURCE LIST 32
ATTACHMENT D - CHARACTERISTICS THAT MAY MAKE PRODUCTS VULNERABLE TO MISREPRESENTATION, FRAUDULENT PRACTICES, AND COUNTERFEITING 34
ATTACHMENT E - WHERE TO LOOK FOR SUSPECT/COUNTERFEIT ITEMS 35
ATTACHMENT F - SUSPECT/COUNTERFEIT PARTS DETECTION 36
ATTACHMENT G - FASTENERS 41
ATTACHMENT H - DOE HEADMARK LIST 45
ATTACHMENT I - REFURBISHED MOLDED CASE CIRCUIT BREAKERS 47
ATTACHMENT J - ASSESSMENT/SURVEILLANCE LINES OF INQUIRY 51

1.0 PURPOSE AND SCOPE
(7.1.1, 7.1.2, 7.1.3, 7.1.4)

This procedure describes the process for the identification, prevention, evaluation, notification, and disposition of suspect/counterfeit items (S/CIs) at CH2M HILL. This procedure applies to items that are:

- In the procurement cycle
- In source or receiving inspection
- In inventory at warehouses and staging areas
- Installed
- In operation.

This procedure applies to:

- Company ordered material
- Material supplied by subcontractors
- Material and test equipment supplied by test sponsors
- Construction
- Fabrication shops
- Laboratory work and experiments
- Surplus/excess property
- Government property
- Material obtained from U.S. Department of Energy (DOE) sources.

2.0 IMPLEMENTATION

This procedure is effective on the date shown in the header.

3.0 RESPONSIBILITES

3.1 Procurement Personnel

Maintain awareness of S/CI and support S/CI program implementation.

3.2 Inspection Personnel

Perform inspections for conformance or acceptance of material including verifications that the item(s) being inspected do not exhibit indications attributed to potential suspect/counterfeit items.

3.3 Quality Assurance Engineer

1. Ensures appropriate procurement controls are implemented to preclude entry of S/CI to the site through review of procurement documents.

2. Notifies the S/CI coordinator of nonconformance reports (NCRs) associated with S/CI.

3.4 S/CI Coordinator

Apprises company, DOE, and DOE local Office of the Inspector General personnel of S/CI status and final disposition.

3.5 Assigned Engineering Personnel

1. Evaluate S/CI information for applicability to design and procurement specifications, system configuration, and operating conditions.

2. Provide technical specifications, critical characteristics, and acceptance methods in support of procurement and inspection activities to prevent introduction of S/CI.

3.6 Responsible Managers and Supervisors

1. Maintain awareness of S/CI.

2. Control potential S/CI.

3. Evaluate training needs based on job classification and ensure individuals receive training in S/CI awareness, prevention, detection, and reporting, as appropriate, to respective assignments.

4.0 PROCEDURE

4.1 Introduction

The two most common S/CIs found at DOE facilities have been threaded fasteners fraudulently marked as high-strength bolts, and refurbished electrical circuit breakers sold and distributed under false certifications. Purchasers have also been misled into accepting S/CIs that do not conform to specified requirements by falsified documentation.

NOTE: Questions about a specific item should be referred to the S/CI coordinator. Attachment A provides a historical listing of suspect components. Equipment/material types or classes have been established to identify those specific items which are classified as potentially misrepresented or S/CI. Attachment B provides a listing of those classifications and items subject to S/CI control at tank farm facilities.

4.2 Procurement

CH2M HILL Personnel

1. Ensure material requirements are specified in subcontracts to preclude the purchase or introduction of S/CI. Use the information in Attachments A, B, C, D, E, F, G, H, and I to identify specific components, characteristics, precautions, and other considerations that are to be addressed during the procurement process to prevent introduction of S/CI.

2. Ensure material requests for quality level 1, 2, and 3 items and services include appropriate technical specifications, procurement quality clauses, documentation, and inspection requirements to prevent introduction of S/CI.

3. In maintenance and construction/fabrication subcontracts, specify appropriate requirements to preclude the purchase or introduction of S/CI.

Quality Assurance Engineer	4.	Review procurement documents to ensure they contain the appropriate procurement controls to preclude entry of S/CI to the site.
Procurement Personnel	5.	Ensure vendor selection complies with qualification requirements for the quality level of the items and services and is based on the vendor's ability to demonstrate the capability of delivering acceptable items.

4.3 Inspection for Potential S/CI

Bill of Material Preparers	1.	For quality level 0 and P-Card items listed in Attachment B, designate an S/CI inspection in the special instruction of the Bill of Material (BOM) in accordance with the requirements of TFC-BSM-FPM_MC-C-01.
	2.	Ensure quality level 0 and P-Card items are inspected prior to material issuance.
First Line Manager	3.	Obtain on-site S/CI inspection for quality level 0 and P-Card items prior to material issue and use.
Engineering Personnel	4.	Provide technical specifications, critical characteristics, and acceptance methods to facilitate inspection planning for S/CI prevention and detection.
Quality Assurance Engineer	5.	Ensure S/CI detection criteria is incorporated into QA inspection planning activities.
Assigned Inspection Personnel	6.	Use Attachments G, H, and I as resources for detecting S/CIs during walkdowns and inspections. Specific items are subject to inspection.
	7.	Verify and document that the items being inspected do not exhibit indications attributed to potential S/CIs as described in Attachments G through J.
	8.	If an S/CI is detected during inspection activities, document and control the S/CI in accordance with TFC-ESHQ-Q_ADM-C-02.

4.4 Control of Material Identified as S/CI

Responsible Manager or Delegate	1.	Ensure items identified as potential S/CI are documented as nonconforming and controlled in accordance with TFC-ESHQ-Q_ADM-C-02. Non conformances identified as S/CI shall be reviewed and processed within four working days to determine whether or not the items are S/CI.
	2.	Transfer tagged S/CIs to 2101-HV for storage.
Cognizant Quality Engineer	3.	Notify the S/CI coordinator of all NCRs associated with the S/CI.

4.5 Reporting of S/CI

Assigned Company Personnel

1. Report all items identified as potential S/CI in accordance with TFC-OPS-OPER-C-24. (7.1.1)

   NOTE: Reporting of S/CIs is required regardless of safety class, where the S/CIs are located (receiving inspection, inventory/storage areas, fabrication and maintenance areas, installed, etc.), or their operating status.

S/CI Coordinator

2. Notify the DOE S/CI coordinator of all occurrence reports associated with S/CIs. As appropriate, transmit copies of NCRs and applicable documentation.

3. Notify the DOE local Office of Inspector General of all S/CIs. Notification should be e-mailed to the DOE local Office of Inspector General points of contact providing information in the following format:

   - NCR number
   - Date NCR was written
   - Purchase order/job control number (if known)
   - End use of product
   - Name of manufacturer, distributor, supplier
   - Safety class (if known)
   - Occurrence report number
   - Value of item(s)
   - Point(s) of contact
   - Description of item(s)
   - Quantity
   - Description of nonconformance
   - Any other pertinent information that would help the DOE local Office of Inspector General.

4.6 Acceptance, Removal, and Disposition of S/CI

S/CI Coordinator

1. Notify responsible company personnel that S/CI may not be destroyed or disposed of without written release from the DOE local Office of Inspector General.

2 Prior to destroying or disposing of S/CIs, consult the Inspector General to determine if there is a need to retain the items as evidence for potential litigation. Based on the Office of Inspector General's decision, either:

   a. Retain S/CI material as evidence for potential litigation, or

   b. Release S/CI material for final disposition and/or disposal as directed by the S/CI coordinator.

Engineering Personnel	3. Evaluate S/CI to determine if its use could create a safety hazard in its current/proposed application.
Assigned Company Personnel	4. If the engineering evaluation of the S/CI has determined that its use could not create a safety hazard in its current/proposed application:

a. Disposition the S/CI to remain in place.

NOTE: Criteria for dispositioning S/CI is by acceptance, removal, or replacement after an engineering evaluation. This should be based on the deficient characteristic of the particular item.

b. Identify the accepted S/CI by marking with orange paint or other appropriate methods and note its location.

c. In areas where operating temperatures are 500°F and above or are subject to cyclic loading where fatigue failure is likely to occur, replace all grades 8 and 8.2 S/CI fasteners prior to further use of the equipment.

d. Engineering must also identify a way to prevent its reuse in an application it may not be suitable for.

e. If removed, prepare the S/CI for disposal.

5. If the engineering evaluation of the S/CI has determined that its use could create a safety hazard in its current/ proposed application:

a. Contact Waste Feed Operations (WFO) Shift Operations to secure the equipment.

b. Remove the S/CI as soon as practical.

c. Tag, segregate, or otherwise control the S/CI to prevent inadvertent use.

d. Prepare the S/CI for disposal.

S/CI Coordinator

6. Ensure that all S/CI material dispositioned for disposal is properly controlled and arranged for the material to be permanently and irrevocably altered so that it cannot be used. Examples of alterations include:

- Melting
- Shredding
- Destroying the threads on fasteners.

7. If the DOE/Office of Inspector General has approved disposal, arrange for pick-up and disposal of the altered S/CI material on a yearly basis. Burying S/CIs may be acceptable if they do not contain hazardous material or material prohibited by federal, state, or local regulations.

4.7 Surplus/Excess Material

Responsible Personnel

1. Remove S/CI from surplus/excess material before they are released for sale or transfer of accountability.

2. Ensure surplus items received from DOE or other facilities are inspected for S/CI prior to installation.

4.8 Assessments

Quality Assurance

1. Conduct assessments of the effectiveness of the S/CI program.

   NOTE: The assessment should be performance based and designed to determine if company activities are conducted in accordance with this procedure, DOE 414.1A, DOE O 440.1A, DOE G 440.1-6, and 10 CFR 830, Subpart A.

2. Lines of inquiry will be used as appropriate during assessments in areas that interface with the S/CI process. See Attachment J.

4.9 Training

Managers and Supervisors

1. Evaluate individual training needs of assigned personnel to ensure they are proficient in S/CI identification and control procedures within their areas of responsibility.

2. All personnel involved in the following specific areas will receive S/CI process and hands-on training, whether it be formal, continuing training, or required reading. The formal training course that is available is Module #1, Course 170720, "Suspect/Counterfeit Items."

   - Quality Assurance/technicians
   - Engineers (design, systems, etc.) who procure materials/equipment
   - Maintenance personnel (electricians, pipefitters, millwrights, instrument technicians)
   - Warehouse personnel who handle and process materials/equipment
   - Tool Crib attendants.

5.0 DEFINITIONS

Counterfeit part. A part made or altered so as to imitate or resemble an "approved part" without authority or right, and with the intent to mislead or defraud by passing the imitation as original or genuine. (Source: U. S. Department of Transportation Federal Aviation Administration Advisory Circular 21-29B, Detecting and Reporting Suspected Unapproved Parts).

Fastener (regardless of the safety classification). (Source: Fastener Quality Act, Public Law 101-592 as amended by Public Law 104-113).

- A screw, nut, bolt, or stud with internal or external threads or a load-indicating washer with a nominal diameter of 5 millimeters or greater in the case of such items described in metric terms; or 1/4 inch or greater in the case of such items in terms of the English system of measurement which contains any quantity of metal and held out as meeting a standard or specification which requires through-hardening; or

- A screw, nut, bolt, or stud having internal or external threads which bears a grade identification marking required by a standard or specification; or

- A washer to the extent that it is subject to a standard or specification applicable to a screw, nut, bolt, or studs described above, except that such term does not include any screw, nut, bolt, or stud that is produced and marked as American Society for Testing and Materials (ASTM) A 307 Grade A or produced in accordance with ASTM F432.

Grade identification. Any symbol appearing on a fastener purporting to indicate that the fastener's base material, strength properties, or performance capabilities conform to a specific standard of a consensus standards organization or government agency.

Graded classifications. System used to determine minimum requirements for structures, systems and components (e.g., design, operation, procurement, and maintenance requirements). The graded classifications in order of precedence are safety class, safety significant, and enhanced quality general services.

High strength graded fastener. Fasteners having a minimum tensile strength of 75 ksi, including those produced and procured in accordance with the Society of Automotive Engineers Standard J429, Grades 5, 5.2, 8, and 8.2; ASTM Standard A325, Types 1, 2, and 3; ASTM A490, ASTM A354, ASTM A449 (I&II), and some ASTM F468.

Item. An all-inclusive term used in place of any of the following: appurtenance, assembly, component, equipment, material, module, part, structure, subassembly, subsystem, system, or unit. (Source: ASME-NQA-1-1989, Quality Assurance Requirements for Nuclear Facilities).

An all-inclusive term used in place of any of the following: appurtenance, facility, sample, assembly, component, equipment, material, module, part, structure, subassembly, subsystem, system, unit, documented concept, or data. (Source: DOE G 440.1-6, Implementation Guide for use with Suspect/Counterfeit Items Requirements of DOE O 440.1, Worker Protection Management; 10 CFR 830.120; and DOE 5700.6C, Quality Assurance).

Substantial safety hazard. A loss of safety function to the extent that there is a major reduction in the degree of protection to the public or employee health and safety. (Source: U.S. Department of Energy (DOE) M 232.1-1A, "Occurrence Reporting and Processing of Operations Information").

Suspect/counterfeit items. A suspect item is one in which there is an indication by visual inspection, testing, or other information that it may not conform to established Government or industry-accepted specifications or national consensus standards. A counterfeit item is a suspect item that is a copy or substitute without legal right or authority to do so or one whose material, performance, or characteristics are knowingly misrepresented by the vendor, supplier, distributor, or manufacturer. An item that does not conform to established requirements is not normally considered S/CI if the nonconformity results from one or more of the following conditions, which should be controlled by site procedures as nonconforming items:

- Defects resulting from inadequate design or production quality control
- Damage during shipping, handling, or storage
- Improper installation
- Deterioration during service
- Degradation during removal
- Failure resulting from aging or misapplication, or
- Other controllable causes.

(Source: DOE G 440.1-6, Implementation Guide for use with Suspect/Counterfeit Items Requirements of DOE O 440.1, "Worker Protection Management;" 10 CFR 830.120; and DOE 700.6C, "Quality Assurance").

6.0 RECORDS

No records are generated during the performance of this procedure.

7.0 SOURCES

7.1 Requirements

1. DOE-O-232.1A Part 4.f. (1), "Occurrence Reporting and Processing of Operations Information." (S/RID)

2. DOE O 414.1A, "Quality Assurance."

3. 10 CFR 830, Subpart A, "Quality Assurance Requirements."

4. DOE O 440.1A, "Worker Protection Management for DOE Federal and Contractor Employees."

7.2 References

1. HNF-SD-MP-SRID-001, "Standards/Requirements Identification Document for the Tank Farm Contractor."

2. DOE G 440.1-6, "Implementation Guide for use with Suspect/Counterfeit Items Requirements of DOE O 440.1, Worker Protection Management; 10CFR830.120; and DOE5700.6C, Quality Assurance."

3. NRC Information Notice 89-70: "Possible Indications of Misrepresented Vendor Products."

4. NRC Information Notice 89-70, Supplement 1: "Possible Indications of Misrepresented Vendor Products."

5. TFC-BSM-CP_CPR-C-01, "Purchasing Card (P-Card)."

6. TFC-BSM-CP_CPR-C-03, "Buyer's Technical Representative Process."

7. TFC-BSM-CP_CPR-C-06, "Procurement of Items (Materials)."

8. TFC-BSM-CP_CPR-C-09, "Supply Chain Process."

9. TFC-BSM-CP_CPR-C-11, "Acquisition Planning."

10. TFC-BSM-FPM_MC-C-01, "Material Receipt, Storage, Issuance, Return, and Excess Control."

11. TFC-ESHQ-Q_ADM-C-02, "Nonconforming Item Reporting and Control."

12. TFC-OPS-OPER-C-24, "Occurrence Reporting and Processing of Operations Information."

13. TFC-PLN-03, "Engineering Program Management Plan."

Figure 1. Management of Suspect/Counterfeit Items.

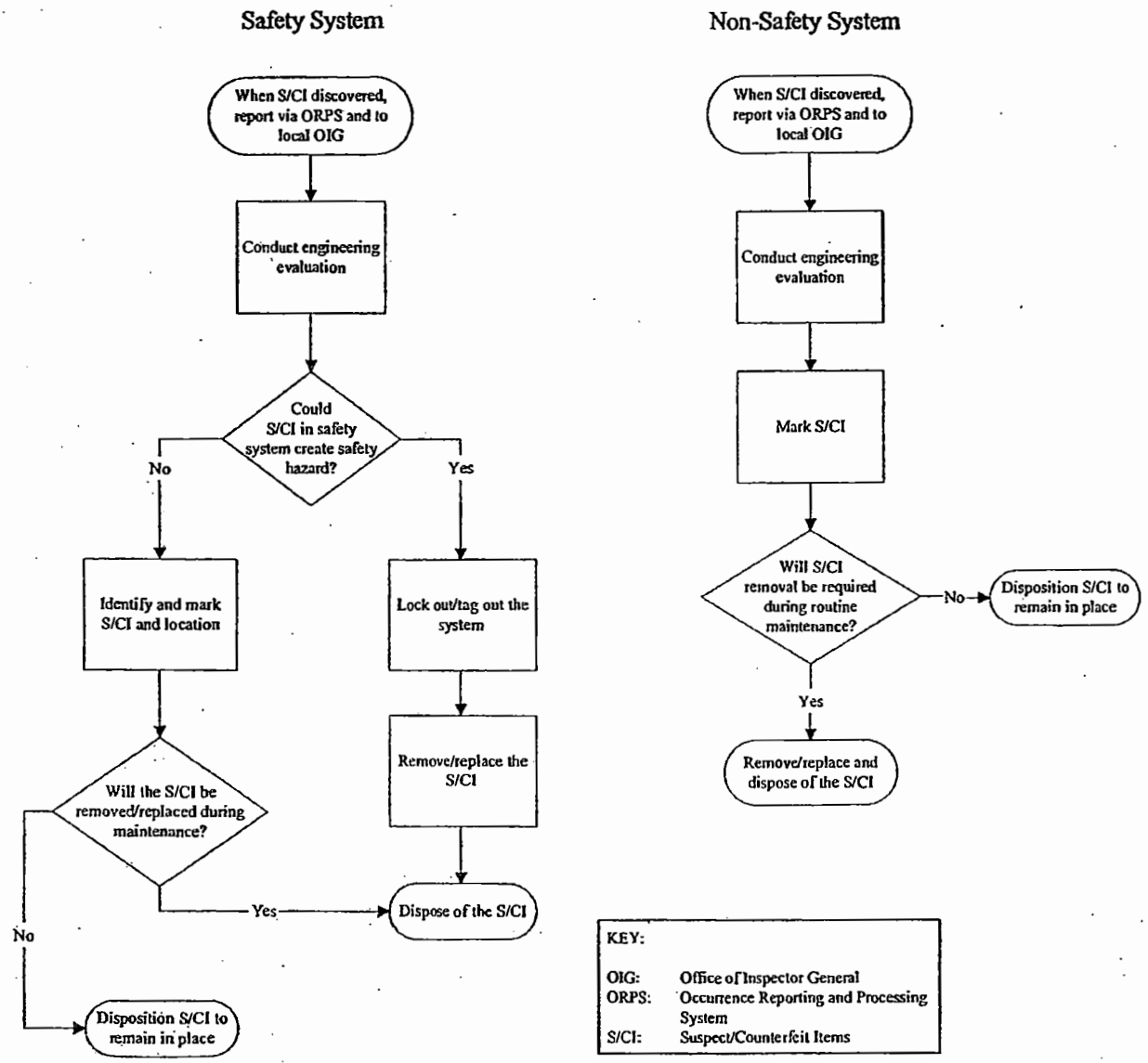

ATTACHMENT A - SUSPECT COMPONENTS LIST

This list was extracted from the U.S. Department of Energy Quarterly Reports on the "Analysis and Trending of Suspect/Counterfeit Items at Department of Energy Facilities," July 1997.

NOTE: It is not necessarily a negative reflection on a supplier or manufacturer if S/CIs are reported regarding its particular product. Reputable manufacturers and suppliers have a vital interest in preventing the manufacture or distribution of S/CI associated with themselves. It may be that the supplier or manufacturer was victimized and is pursuing S/CI associated with its products in an aggressive, prudent, and professional manner in order to get such items off the market. Therefore, each particular case regarding the manufacture or supply of S/CI must be examined on its own merit without making premature conclusions regarding fault or culpability of the manufacturer or supplier whose name is associated with the S/CI. In short, what follows is a "suspect components list" and not a "suspect manufacturer or supplier list." The manufacturer or supplier identified in the following table should not be considered to have engaged in any wrongdoing without additional information.

ATTACHMENT A - SUSPECT COMPONENTS LIST (cont.)

Component	Manufacturer/Type	Description	Supplier	References
Circuit Breakers	General Electric (Component Examples) • AKF-2-25 • EC Trip Types, E-C-1, E-C-2A • AK All Types	Metal clad, low voltage, DC	Satin America & Circuit Breaker Systems Inc.	NRC I.N. 89-45, Supplements and Attachments SENS Report ID #6 5/23/89
Circuit Breakers	General Electric (Component Examples) • AK-3A-25 • KHL-36 125 • THEF 136050 • AK-2-75-3 • AK-2 • AK-1-50 • AK-1-75 • B • TDQ • TCVVFS • TFJ • TEB122015-WL • TEB132090-WL • TE111015 • TED134060-WL • TEB124050-WL • THED136100 WL • TED126050 • THED136060 WL • THGB2120 • TEF134015 • THEF136M1100 • TED 134030-WL • AK2A25 • THED-136100-WL • THED-136050-WL • THED-136045-WL • THFK-236070-WL • TE-122070 • THED-136150-WL • THED-13600-WL • TED-113020 • TEC-360S0 • THED-124015-WL	1, 2, & 3 pole, various amperages	Bud Ferguson's Industrial Control & Supply, Inc., General Circuit Breaker & Electrical Supply HLC Electric Supply NSSS, Inc. California Breakers, Inc. Rosen Electric Equipment PENCON International (DBA) General Magnetics/ Electric Wholesale Lakeland Engineering Equipment Co. ANTI THEFT Systems, Inc. (DBA) ATS Circuit Breakers and AC Circuit Breaker Electrical Supply California Breakers Voyter Electric Co.	NRC I.N. 88-46 Supplements and Attachments NRC I.N. 90-46 Office of Nuclear Safety 93-5 (#11)

ATTACHMENT A - SUSPECT COMPONENTS LIST (cont.)

Component	Manufacturer/Type	Description	Supplier	References
Circuit Breakers	Westinghouse (Component Examples) • TF136090 • TF361050WL • TED1130020			
	• Not Provided	Commercial Grade	Westinghouse Electric Supply Co. (WESCO)	NRC I.N. 91-48
	• DB-25 & DS-416	Low Voltage	Satin America & Circuit Breaker Systems, Inc.	NRC I.N. 89-45 & Supplement #2
	• FSN-5925-628-0641 • DB-25 • DB-50 • HKB3150T • FB3020 • FB3070 • FB3050 • EHB3025 • LBB3125 • HKA31250 • JA3200 • EHB2100 • 225N	Trip units; Navy Trip units; 1, 2, & 3 pole various amp. ratings	General Circuit Breaker & Electrical Supply HLC Electrical Supply California Breakers, Inc. PENCON International (DBA) General Magnetics/Electric Wholesale	NRC I.N. 88-46, Supplements and Attachments Office Of Nuclear Safety 93-9
	• EB 1020 • HDEA 2030 • MCP331100R • MCP431550CR • BAB3060H • 656D14 8G03		ANTI THEFT Systems, Inc. (DBA) ATS Circuit Breakers and AC Circuit Breaker - Electrical Supply	
	• FA-2100 • EH-2050 • HFB-3050		Molded Case Circuit Breakers	
	• HFD(B)-3020 • MA3600		NSSS, Inc.	
	• F2020 • EH2100 • EB3050 • HMC3800F		Spectrum, Tech.	
	• EA2090 • FA3125		Rosen Electric	
	• HMCP 150		Luckow Circuit Breaker	

ATTACHMENT A - SUSPECT COMPONENTS LIST (cont.)

Component	Manufacturer/Type	Description	Supplier	References
Circuit Breakers	Westinghouse (cont.) (Component Examples) • HFD • EH2070 • FA2050 • JA2225 • JL3B125 • JL3B070 • JL3B150 • JL3B200 • JL3B090 • JL3B100 • HLM3800T • F3100N • MA3500 • EH2015 • FA3035 • FA2100 • HLA2125OTM • EH2070 • JB3100 • EB2030 • 8MC800 • CAH3200 • EHB3040 • JL3-B150 • JL3-B200 • JL3-B090 • JL3-B1000 • HFA, HFB, FA • JL3-(B)8070 • JL3-B125 • EH-2020 • FA-3035 • EH-2050 • FA-2100 • FA-2050 • HFB-3050 • JA-2225 • HLM3800T • F3100N • MA3500 • EH2015 • LA3200WL • HLA3200T • 2602D58U9	Shunt Trips Aux. Contacts 2 & 3 pole circuit breakers of various amperages	General Circuit Breaker & Electrical Supply HLC Electrical Supply PENCON International (DBA) General Magnetics/ Electric Wholesale ANTI THEFT Systems, Inc. (DBA) ATS Circuit Breakers and AC Circuit Breaker - Electrical Supply Molded Case Circuit Breakers Co. (MCCB)	NRC I.N. 88-46 Supplements and Attachments

ATTACHMENT A - SUSPECT COMPONENTS LIST (cont.)

Component	Manufacturer/Type	Description	Supplier	References
Circuit Breakers	Westinghouse (cont.) (Component Examples)			
	• HLB3200T • 262156G19 • 1A & 1B			NRC I.N. 88-46 Supp. & Attach.
	• HL300T • HLA2400TM • HMA3600T • HMA3700T • HKA3225T • HNB2700T	225 amp, 3 pole 3 pole, 20 amp 3 pole, 30 amp 1 pole, 20 & 30 amp 2 pole, 20 & 30 amp 3 pole, 60 amp	Not Provided	
	• MDL#KAF • QNB3020 • QNB3030			SENS ID #10 3-17-89 SENS ID #11 3-3-89
	• BA • BA • BA • E3060 • F3020	3 pole, 20 amp	Not Provided	SENS Report ID #12 10-19-88 NRC I.N. 88-46
Circuit Breakers	ITE (Component Examples)			
	• Model - E43B015	3-phase 480 volt	Cal. Breakers/Elect. Wholesale Supply Co.	SENS Report ID #8, 5-5-89
	• EQ-B	1 pole, 20 amp 3 pole, 30 amp	Not Provided	SENS ID #10 3-17-89
	• EE-3B030			SENS ID #11 3-3-89
	• EF3B070 • EF3H050 • EF3B125 • EF3B040 • E42B020 • QJ2B200 • JL3B400	2 & 3 pole various amperages	General Circuit Breaker & Electrical Supply HLC Electrical Supply	NRC I.N. 88-46, Supplements and Attachments

ATTACHMENT A - SUSPECT COMPONENTS LIST (cont.)

Component	Manufacturer/Type	Description	Supplier	References
Circuit Breakers	ITE (cont.) (Component Examples) • HE9B040 • EE3B050 • BQ2B030 • EE3B070 • EE2B100 • EE2B050 • EE2B030 • FJ3B225 • ET • KA • EH-313015 • JL-3B070 • JL-3B150 • E43B015 • EF2-B030 • EH3B100 • QP1B020 • QJ3B200 • EF3B100 • 1193		California Breakers, Inc. PENCON International (DBA) General Magnetics/ Electric Wholesale ATS Circuit Breakers, Inc. Panel Board Specialties Rosen Electric Equipment	
Circuit Breakers	ITE, Gould & ITE Imperial Brown Boveri Elect. (BBE) ASEA Brown Boveri (Component Examples) • Type HK • 5 HK • 7.5 HK • 15 HK • 38 HK • ITE 62-6	Not Provided ID-4KV Not Provided Not Provided Not Provided	Brown Boveri ASEA Brown Boveri	NRC I.N. 89-86 NRC I.N. 87-41 Office of Nuclear Safety, 92-25
Circuit Breakers	Square "D" Co. Component Examples. • KHL 36125 (Any Type)	Molded Case	General Circuit Breaker & Electrical Supply HLC Electric Supply California Breakers, Inc. PENCON International (DBA) General Magnetics/Electric Wholesale	NRC I.N. 88-46 Supp. & Attach. NRCB 88-10 NRC I.N. 90-46

ATTACHMENT A - SUSPECT COMPONENTS LIST (cont.)

Component	Manufacturer/Type	Description	Supplier	References
Circuit Breakers	Square "D" Co. Component Examples (cont.)		ANTI THEFT Systems Inc. (DBA) ATS Circuit Breakers and AC Circuit Breaker - Electrical Supply	
	• QOB220	1 pole, 15 amp	Not Provided	SENS ID #10 3-17-89
	• QO220 • LO-3	2 & 3 pole 20 & 50 amp breakers	General Circuit Breaker & Electrical Supply	NRC I.N. 89-45 & Supplement #2
	• SBW-12 • 989316 • FAL3650-16M or • FAL36050-16M • KA36200	3 pole - 200 amp breaker 30A/600V	HLC Electric Supply California Breakers, Inc.	
	• 999330	Not Provided	PENCON International (DBA) General Magnetics/Electric Wholesale	
	Manufacturer not Provided • EHB3025	Not Provided	Stokely Enterprises Molded Case Circuit Breakers	DOE Letter 8-26-91 Reprinted NuVEP: Bulletin 7-26-91
Circuit Breakers	Fed. Pacific (Component Examples)		General Circuit Breaker & Electrical Supply	
	• NEF431020R • NE111020 • NE	3 pole, 20 amp 1 pole, 20 amp 1 pole, 15 amp	HLC Electric Supply California Breakers, Inc. PENCON International (DBA) General Magnetics/Electric Wholesale	SENS ID. #10 3-17-89

ATTACHMENT A - SUSPECT COMPONENTS LIST (cont.)

Component	Manufacturer/Type	Description	Supplier	References
Circuit Breakers	Fed. Pacific (Component Examples) (cont.) • NF63-1100 • NE22-4060 • NE22-4100 • NEF-433030 • 2P125	1, & 3 pole - 30, 60 & 100 amp breakers	ANTI THEFT Systems, Inc. (DBA) ATS Circuit Breakers and AC Circuit Breaker - Electrical Supply General Circuit Breaker & Electrical Supply HLC Electric Supply California Breakers, Inc.	SENS ID. #11 3-3-89 NRC I.N. 88-46, Supp. & Attach.
	Jefferson (Component Examples)	Not Provided	PENCON International (DBA) General Magnetics/electric Wholesale ANTI THEFT Systems, Inc. (DBA) ATS Circuit Breakers and AC Circuit Breaker - Electrical Supply Mid West Co.	NRC I.N. 88-46, Supp. & Attach.
Circuit Breakers	Superior (Component Examples) • 246U-3	Not Provided	General Circuit Breaker & Electrical Supply Rosen Electric HLC Electric Supply California Breakers, Inc. PENCON International (DBA) General Magnetics/Electric Wholesale ANTI THEFT Systems, Inc. (DBA) ATS Circuit Breakers and AC Circuit Breaker - Electrical Supply	NRC I.N. 88-46 Supp.& Attach.

ATTACHMENT A - SUSPECT COMPONENTS LIST (cont.)

Component	Manufacturer/Type	Description	Supplier	References
Circuit Breakers	Manufacturer Not Provided (Component Examples) 50DHP250	 2 pole - 50 amp	General Circuit Breaker & Electrical Supply HLC Electric Supply California Breakers, Inc. PENCON International (DBA) ATS Circuit Breakers and AC Circuit Breaker - Electrical Supply	NRC I.N. 88-46, Supp. & Attach.
Circuit Breakers Heaters	Cutler Hammer (Component Examples) • 10177H13 • 10177H21 • 10177H32 • 10177H036 • 10177H1049	 Not Provided	AAKER General Circuit Breaker & Electrical Supply HLC Electrical Supply California Breakers, Inc. PENCON International (DBA) General Magnetics/Electric Wholesale ANTI THEFT Systems, Inc. (DBA) ATS Circuit Breakers and AC Circuit Breaker - Electrical Supply	NRC I.N. 88-46, Supp. & Attach.

ATTACHMENT A - SUSPECT COMPONENTS LIST (cont.)

Component	Manufacturer/Type	Description	Supplier	References
Switches	(Component Examples) Crouse Hinds #EDSC2129 Sq. D Type G. Class 9012, 9025, 9016	Tumbler, ft. op	Platt Electric Supply Co. Gen. Motors, Electro-Motive Design	SENS ID #16 1-27-92 Office of Nuclear Safety 93-24 & 93-27
Transmitters	Rosemount	(Component Examples) • Model 1151 GP • Model 1151 DP	Venetech	E.L. Wilmot letter dated 8-1-91 H. Richardson letter HR-81-91 dated 8-15-91
Motors	Siemen & Allis (Component Examples) INP 143 T 215 T	10 H.P.	General Circuit Breaker & Electrical Supply HLC Electric Supply California Breakers, Inc. PENCON International (DBA) General Magnetics/Electric Wholesale ANTI THEFT Systems, Inc. (DBA) ATS Circuit Breakers and AC Circuit Breaker - Electrical Supply Rosen Electric Equipment	NRC I.N. 88-46, Supplements and Attachments

ATTACHMENT A - SUSPECT COMPONENTS LIST (cont.)

Component	Manufacturer/Type	Description	Supplier	References
Relays	Potter & Brumfield (Component Examples) MDR-138, 173-1 134-1, 142-1	Not-latching rotary	Stokely Enterprises Spectronics, Inc. Nutherm International The Martin Co.	NRC I.N. 90-57 & Attach.
	Teledyne	All qualified to MIL-R-28776 and MIL-R-39016	Not Provided	DOE-ID Wilmot letter, 7-16-91
	G.E. & Exide (Component Examples) • 12HGA-11S52 • NX 400	Overload & Aux.	General Circuit Breaker & Electrical Supply HLC Electric Supply California Breakers, Inc. PENCON International (DBA) General Magnetics/Electric Wholesale ANTI THEFT Systems, Inc. (DBA) ATS Circuit Breakers and AC Circuit Breaker - Electrical Supply	NRC I.N. 88-46, Supp. & Attach.
	Manufacturer not provided • FSC-5945	Not Provided	Stokely Enterprises	DOE Letter 8-26-91 Reprinted NuVEP: Bulletin 7-26-91
	Amerace (or Agastat) (Component Examples) Models: E7024 E7022	Electro Pneumatic Timing Relays	Amerace Control Components Supply	SENS ID #1 11-1-91 NRC I.N. 92-24
	A through L Series Model 7032	PRB		

ATTACHMENT A - SUSPECT COMPONENTS LIST (cont.)

Component	Manufacturer/Type	Description	Supplier	References
Fuses	Bussman Co. (Component Examples) REN 15 & NOS-30	15A-250V & 30A-600V	General Circuit Breaker & Electrical Supply HLC Electric Supply California Breakers, Inc. PENCON International (DBA) General Magnetics/Electric Wholesale ANTI THEFT Systems, Inc. (DBA) ATS Circuit Breakers and AC Circuit Breaker - Electrical Supply	NRC I.N. 88-46, Supp. & Attach.
	Class 1E	All Supplied by PMS	Preventive Maintenance Systems (PMS)	NRC I.N. 88-19
Controllers	Manufacturer Not Listed (Component Examples)	Motor Controllers	Stokely Distributors & Stokely Enterprises, Inc.	DOE letter 8-26-91 & NUVEP Bulletin 7-26-91
Starters	Westinghouse (Component Examples) 626B187G17 626B187G13	Not Provided	General Circuit Breaker & Electrieal Supply HLC Electric Supply California Breakers, Inc. PENCON International (DBA) General Magnetics/Electric Wholesale ANTI THEFT Systems, Inc. (DBA) ATS Circuit Breakers and AC Circuit Breaker - Electrical Supply	NRC I.N. 88-45 Supp. & Attach.
Resistors	Unknown	All	Impala Electronics	NRC I.N. 91-01

ATTACHMENT A - SUSPECT COMPONENTS LIST (cont.)

Component	Manufacturer/Type	Description	Supplier	References
Semiconductors	Solid State Devices Inc. (SSDI) SFF 9140	P-Channel MOSFET	SSDI	DOE Albuquerque Letter, 06-25-96 to DOD Inspector General
	SPD 1511-1-11	Pin Diode (SA3059)		
	2A14/18 or 2A14/52	Ion Implanted Diode		
	SSR4045CTTXV	SCHOTTKY Diodes		
	SFF9140TWX	Power Transistors		
	SPMF106ANH	Special Pack MOSFET Switch		
	SPD 5818 or IN5858JTXV	Axial Leaded SCHOTTKY Diode		
	2N797	Transistor		
	Unknown	Diode (SA 3436)		
Starter Controls	Westinghouse (Component Examples)	Not Provided	General Circuit Breaker & Electrical Supply	NRC I.N. 88-48
	• A200MICAC		HLC Electric Supply	
	• A201KICA		California Breakers, Inc.	
	• A201L2CA			
	• AN13A		PENCON International (DBA) General Magnetics/Electric Wholesale	
			ANTI THEFT Systems, Inc. (DBA) ATS Circuit Breakers and AC Circuit Breaker - Electrical Supply	

ATTACHMENT A - SUSPECT COMPONENTS LIST (cont.)

Component	Manufacturer/Type	Description	Supplier	References
Gauge Glasses	Siemen & Allis (Component Examples) #00-737-637-118 215 T	Not Provided	Rosen Electric Co.	NRC I.N. 88-46 Supp. & Attach.
Mercury Lamps	Spectro Inc. (Component Examples) V00014	Not Provided	General Circuit Breaker & Electrical Supply HLC Electric Supply California Breakers, Inc. PENCON International (DBA) General Magnetics/Electric Wholesale ANTI THEFT Systems, Inc. (DBA) ATS Circuit Breakers and AC Circuit Breaker - Electrical Supply	NRC I.N. 88-46
Electrical Frames	Westinghouse (Component Examples) LA2600F LA3600F MA2800F	Not Provided	General Circuit Breaker & Electrical Supply HLC Electric Supply California Breakers, Inc. PENCON International (DBA) General Magnetics/Electric Wholesale ANTI THEFT Systems, Inc. (DBA) ATS Circuit Breakers and AC Circuit Breaker - Electrical Supply	NRC I.N. 88-46
Push button station	Crouse Hinds (Component Examples) #00-737-637-118	Single gang, pushbutton	Platt Electric Supply Co.	SENS Report ID #16 1-27-92

ATTACHMENT A - SUSPECT COMPONENTS LIST (cont.)

Component	Manufacturer/Type	Description	Supplier	References
Overload Relay Thermal Unit	Square D (Component Examples) B19.5, B22	Not Provided	Not Provided	NRC I.N. 88-46
Piping, Fittings Flanges, and Components	Tube-line Corp. Ray Miller, Inc.	Subassemblies, fittings, flanges, & other components (Carbon and Stainless Steel components)	Tube-line Ray Miller, Inc.	NRC IEB 83-06 NRC I.N. 89-18 NRC IEB 83-07 NRC I.N. 83-01
Piping, Fittings, Flanges, and Components	Piping Supplies, Inc. & West Jersey Mfg. & Chews Landing Metal Mfg.	Carbon and Stainless Steel Fittings and Flanges	Piping Supplies, Inc. & West Jersey Mfg. & Chews Landing Metal Mfg.	NRC Bulletin 88-05 & Supplements
Valves	VOGT	Full port design 2-inch Model SW-13111 & 1023	CMA International IMA Valve Refurbisher	NRC I.N. 88-48 & Supplements
	Crane	4"-1500psi, pressure sealed	Southern Cal. Valve Maintenance co., Amesse Welding Service & CMA Int.	NRC I.N. 91-09
	ITT Grinnell Valve Co., Inc	Diaphragm valves	ITT Grinnell Valve Co. Inc. Div. of Diaflo & ITT Engineered Valves	NRC Comp. Bulletin 87-02
	Crane, Pacific, Powell, Walworth & Lunkenheimer	Gate Valves	Coffeyville Valve Inc.	NRC I.N. 92-56
	Pacific	8" & 3" Globe Valve	CMA & IMA Valve Refurbisher	NRC I.N. 88-48, Supp. & Attach.
	Crane Chapman	24" Check Valve	CMA & IMA Valve Refurbisher	NRC I.N. 88-48, Supp. & Attach.
	Pacific	Check Valve	CMA & IMA Valve Refurbisher	NRC I.N. 88-48, Supp. & Attach.

ATTACHMENT A - SUSPECT COMPONENTS LIST (cont.)

Component	Manufacturer/Type	Description	Supplier	References
Valves	Kerotest	8" Valve	CMA & IMA Valve Refurbisher	NRC I.N. 88-48 Supp. & Attach.
	Pacific	4" Gate Valve	CMA & IMA Valve Refurbisher	NRC I.N. 88-48 Supp. & Attach.
	Lukenheimer	6" Model 1542 20" Model 3013	CMA & IMA Valve Refurbisher	NRC I.N. 88-48 Supp. & Attach.
	Crane	All	CMA & IMA Valve Refurbisher	NRC I.N. 88-48 Supp. & Attach.
Flanges	China Ding Zinang Nan Xi Li Flange Co. Shou Gang Mach. Eng. Co.	Flanges, ASTM A105, ASME SA105	Billiongold Co. LTD. Tain Gong Co. Sanxi Province Overseas Trading Corp	NRC I.N. 92-68 and Attachments Office of Nuclear Safety 92-25, 93-23, and 92-35 National Board of Boiler and Pressure Vessel Inspectors (NBBI) Bulletin: Special Report, 1992, Volume 48, Number 2, The Chinese Flange Investigation
Valve Replacement Parts	Masoneilian-Dresser Industries	Plug stem, stem to plug anti-rotation pin, seat ring, valve plugs, bushings, cages & packing box components	Cor-Val, Control Valve Specialists, H.H. Barnum & M.D. Norwood, Sample Webtrol Controls, Inc.	NRC I.N. 88-97 Supp. & Attach.
Pumps & Replacement Parts	Hayward Tyler Pump Co.	HTPC ASME Nuclear Code	Hayward Tyler Pump Co.	IEB 83-05 & Attachments
Channel Members	Unistrut Corporation	Continuously slotted channels, structural framing members, fasteners, nuts, fittings, pipe clamps	Unistrut Corporation	NRC I.N. 91-25
Fire Barriers	Thermal Science Inc.	Thermo-Log 330	None Listed	ES&Q Update #8 NRC I.N. 92-55
Valve Actuator	Limitorque	Eyebolts on housing cover	None Listed	Office of Nuclear Safety 93-25 NRC I.N. 93-37

ATTACHMENT A - SUSPECT COMPONENTS LIST (cont.)

Component	Manufacturer/Type	Description	Supplier	References
Steel	Alloy & Carbon Steel Co. Inc., Atlantic Steel Co., Levingston Steel Co., & Copperweld Steel co.	Plate Angle Flat Bar Bar	Meredith Corporation Pressure Vessel Nuclear Alloy & Carbon Steel Co., Inc.	NRC I.N. 89-56, Attachments and Supplements
Fasteners (Bolts, Screws, Nuts, and Washers)	(parentheses designated headmark) Asahi (A) Daiichi (D) Daiei (E) Fastener Co. of Japan (FM) Hinomoto Metal (H) Jin Her (J) Kyowa (K) Kosaka Kogyo (KS) Kyoei Minamida Seiybo (M) Mnato Kogyo (MS) Nippon (NF) Takai (RT) Tsukimori (S) Unytte (UNY) Yamadai (Y) Ivaco, Infasco (hollow triangled)	• Those with suppliers or manufacturers • Those that are improperly marked • Those of foreign manufacture that do not meet Public Law 101-592. Fastener Quality Act	Note: Listed suppliers may also be manufacturers Lawrence Engineering & Supply Co. Metal Building Bolts Nichimin Corporation UNICO Ace Corporation E. K. Fasteners, Inc. H. Y. Port Fasteners Co. Kobayashi Metals, LTD. Takai Screw Mfg. Co. LTD. Yamaguchi Sesakusho Co. LTD. Highland Bolt & Nut Porteous Fastener Co. Northwest Fasteners Ziegler Bolts & Parts Co. Edgewater Fasteners, Inc. Reynolds Fasteners A & G Engineering	Commercial Carrier Journal Articles for: 6/88, 1/90, 2/90, 3/90, 4/90, 6/90, 7/90, 12/90 INEL Suspect Headmark List SENS Report #5 2/6/91 SENS Report #13 2/6/91 HR 3000, U.S. House of Representatives, July 1988 J. A. Jones, Ltr, 9/23/92 Memo from L. Kubicek, 3/28/91 Memo from D. Sanow, 3/8/91 "Fastener Technology International," Feb., April, and June 1993 Rep. J. Dingell Ltr to Comm. Dept. & NRC June 18, 1993 Office of Nuclear Safety 93-26, 93-22, 93-11 DOE Quality Alert, Bulletin, Issue No. 92-4, August 1992 FDH Hanford Suspect Headmark List

ATTACHMENT A - SUSPECT COMPONENTS LIST (cont.)

Component	Manufacturer/Type	Description	Supplier	References
Fasteners (Bolts, Screws, Nuts, and Washers)	NUCOR	1-1/4" x 2" Zinc Chromate plated surface Hexhead cap screws	Cordova Bolt, Inc.	SENS ID #13 11-6/91
	Any	Any	Aircom Barnett Bolt Works Bolts & Nuts, Inc. Glasser & Assoc. Knoxville Bolt & Screw Metal Fastener Supply Phoell Mfg. Co. Service Supply Co. Southeastern Bolt & Screw Sure Loc Victory Bolt	NRC Compliance Bulletin 87-02 NRC I.N. 89-59

ATTACHMENT B - CLASSIFICATION OF POTENTIALLY SUSPECT/COUNTERFEIT ITEMS

A. ELECTRICAL ITEMS

- Molded Case Circuit Breakers
- Motor Control Centers
  - Complete Units
  - Components
  - Starters
  - Starting coils
  - Contactors
  - Overload relays
  - Starter control relays
  - Overload heaters
- Protective/control relays
- DC power supplies/chargers
- AC inverters
- Current/potential transformers
- Exciters/regulators
- Bus transfers/auto bus transfers
- Motor generator sets
- Generators
- Rewindable motors
- Printed circuit boards
- Bulk commodity items
  - Fuses
  - Splices
  - Electrical connectors
- Indicators/controllers
- Panel lights/switches
- Transmitters/instrument switches
- Isolation devices.

The following items are excluded unless required by the applicable program/project: 600V or less: motors; outlets, switches, and plugs; boxes, conduit (i.e., bodies and covers, nipples, fittings, EMT, flex, liquid tight, rigid); wire; miscellaneous wire connections #10 and below; fixtures; lights.

B. MECHANICAL ITEMS

- Welding materials
  - Rod
  - Wire
  - Flux
- Structural members (pipe supports)
- Channel members

ATTACHMENT B - CLASSIFICATION OF POTENTIALLY SUSPECT/COUNTERFEIT ITEMS (cont.)

- Sheet
- Plate
- Bars
- Round stock
- Other raw material which requires an ASTM or national standard
- All lifting/rigging gear (wire rope shall be made in the United States by a member of the Wire Rope Technical Board (WRTB) or the Associated Wire Rope Fabricators (AWRF) (except stainless steel, and unless recommended otherwise by a crane or hoist manufacturer); stainless steel wire rope shall be made in the United States and shall be 302 or 304 grade stainless steel unless otherwise recommended by a crane or hoist manufacturer)
- Ratchet tie-downs/strapping devices and come-a-longs, with fasteners.

The following materials are excluded unless required by the applicable program/project: ASTM-A36, brass, copper, sheet metal 7 GA or less, and aluminum.

C. PIPING - which requires an ASTM or ASME standard
- Fittings
- Flanges
- Valves
- Pipe
- Components.

The following materials are excluded unless required by the applicable program/project: ASTM-A-53, Swagelock; cast iron, galvanized, copper, bronze, and brass; PVC; and gaskets.

D. FASTENERS - All fasteners 1/4" and above in diameter
- Bolts
- Studs
- Cap screws
- High-strength washers
- Nuts
- Anchors.

NOTE: Attachment I identifies headmarkings for stainless steel and carbon steel high strength fasteners that are considered counterfeit. Fasteners exhibiting these headmarks are counterfeit and no further testing is required.

The following items are excluded, unless required by the applicable program/project: sheetmetal screws, wood screws, stove bolts, pan heads, machine screws, lag bolts, threaded rod, rivets, and carriage bolts.

ATTACHMENT C - SUSPECT/COUNTERFEIT ITEMS INFORMATION SOURCE LIST

A wide variety of industry and Government sources publish information relative to suspect/counterfeit products. The following sources provide information which is available on a continuing basis:

Industrial Fasteners Institute (IFI)

The following information is available from IFI via subscription:

- "Fastener Application Advisory" (Published Monthly)
- "North American Manufacturers Identification Markings for Fasteners"
- Fastener-related video cassettes.

The National Board of Pressure Vessel Inspectors (NBBI)

The NBBI publishes "National Board Bulletins" to alert manufacturers and users of misrepresented products as they are discovered.

National Highway Traffic Safety Administration (NHTSA)

The NHTSA's Office of Defects Investigation issued a "Suspect Bolt List" in late 1990 identifying numerous fasteners, which they determined to be misrepresented.

Trade Journals and Magazines

There are numerous trade-oriented magazines which have carried articles identifying incidents of failure of substandard parts in industry applications which have caused personal injury and death, as well as serious property damage.

Newspaper and Television Reports

Another good source of information are news reports, which provide current accounts of problems encountered as a result of misrepresented products.

U.S. Nuclear Regulatory Commission (NRC)

The NRC issues bulletins, notices, and regulatory guidance on a continuing basis to alert nuclear power utilities of potential intrusion of misrepresented products into the operations environment of operating nuclear power plants.

U.S. Department of Defense (DOD) and U.S. Department of Commerce publications are also monitored by the DOE to assure that the deficiencies identified do not contaminate DOE facilities.

ATTACHMENT C - SUSPECT/COUNTERFEIT ITEMS INFORMATION SOURCE LIST (cont.)

Government Industry Data Exchange Program (GIDEP)

The mission of this program, established by the Office of Management and Budget, is to support government systems readiness, logistics effectiveness, productivity, and cost reduction through timely retrieval, storage, and distribution of data among government and industry organizations.

U.S. Department of Energy

The following documents are issued by the DOE to provide information and guidance relative to the suspect/counterfeit parts issue:

- DOE Orders
- Letters of Direction
- Bulletins and Quality Alerts

(In addition, the DOE periodically sponsors seminars/workshops relative to the detection and control of suspect/counterfeit parts).

U.S. Customs Service

The U.S. Customs Service has published the Suspect Headmark List (Figure 1) identifying graded fasteners determined to be of indeterminate quality, which has been adopted by DOE and, ultimately, Project Hanford, as a formal guide for use when evaluating currently installed and newly procured graded fasteners to assure their fitness for use on the Hanford Site.

ATTACHMENT D - CHARACTERISTICS THAT MAY MAKE PRODUCTS VULNERABLE TO MISREPRESENTATION, FRAUDULENT PRACTICES, AND COUNTERFEITING

The following information has been extracted from the NRC Information Notice 89-70, Supplement 1, Attachment 3:

- High-turnover usage rate.
- No easy or practical way to uniquely mark the component itself.
- Critical characteristics, including environmental qualification not easily discernable in external visual inspection, or characteristics that are difficult to verify through receipt testing.
- May be widely used in non-critical and critical applications.
- Use may not result in used appearance.
- Often marketed through a supplier and dropped shipped from locations other than that of the original supplier.
- Special processes for ASME materials may be subcontracted (heat treating, testing, and inspections).
- Easily copied by secondary market suppliers.
- Viable salvage market.
- Reduced number of original equipment manufacturers.
- Obsolete or hard-to-get components.
- Components manufactured by a company that is no longer in business.
- Items with documentation from a plant where construction has been suspended, canceled, or deferred.
- Moderate or low cost.
- High potential for profit (rejected heats of material are purchased and decertified).

ATTACHMENT E - WHERE TO LOOK FOR SUSPECT/COUNTERFEIT ITEMS

The following areas should receive increased scrutiny to assure that suspect/counterfeit items are not evident:

Items in Supply

- Company supply stock
- Wagon stock
- Other sources of supply contamination.

Items in Use

- Plant facilities, components, and systems
- Equipment
- Operations and maintenance.

Items Being Procured

- "Known" critical items
- Critical equipment and assemblies
- Non-critical "known" purchases.

Operations Decisions

- Major disaster risks
- Personnel safety risks
- Program/mission risks (cost and schedule).

Cost of Implementation

- Potential consequential costs
- Management risk assessment
- Cost of focusing established controls
- Impact on schedule and program mission.

Cost of Focus on Known Suspect/Counterfeit Parts

- Uses existing procurement program
- Focuses on "known parts first"
- Reduction in major disaster potential
- Program costs low/benefits high.

ATTACHMENT F - SUSPECT/COUNTERFEIT PARTS DETECTION

It is very important to remember that just because an item is identified as being "suspect/counterfeit" it may not be appropriate to simply reject it. A review should be performed prior to formal disposition of the item to assure that it is indeed unfit for the intended application.

DETECTION METHODS

Visual Inspection

Items may be substandard or fraudulent when:

- Nameplates, labels, or tags have been altered, photocopied, painted over, are not secured well, show incomplete data, or are missing (e.g., preprinted labels normally show typed entries).
- Obvious attempts at beautification have been made, e.g., excess painting or wire brushing, evidence of hand painting (touch-up), or stainless steel is painted.
- Handmade parts are evident, gaskets are rough cut, shims and thin metal part edges show evidence of cutting or dressing by hand tools (filing, hacksaw marking, use of tin snips or nippers).
- Hand tool marks on fasteners or other assembly parts (upset metal exists on screw or bolt heads) or dissimilar parts are evident (e.g., seven or eight bolts are of the same material and one is a different material).
- Poor fit between assembled items.
- Configuration is not consistent with other items from the same supplier or varies from that indicated in supplier literature or drawings.
- Unusual box or packing of component or item.
- The supplier is not a factory-authorized distributor.
- Dimensions of the item are inconsistent with the specifications requested on the purchase order and/or those provided by the supplier at the time of shipment.
- The item or component matches the description of one that is on a suspect items list (e.g., U.S. Customs Service "Suspect Headmark List," National Board of Boiler and Pressure Vessel Inspectors (NBBI) "Special Bulletin," etc.).

ATTACHMENT F - SUSPECT/COUNTERFEIT PARTS DETECTION (cont.)

Documentation

Documents may be suspect/counterfeit when:

- The use of correction fluid or correction tape is evident. Type or pitch change is evident.
- The document is not signed or initialed when required, is excessively faded or unclear (indicating multiple, sequential copying), or data are missing.
- The name or title of the document approved cannot be determined.
- Technical data is inconsistent (e.g., chemical analysis indicates one material and physical tests indicate another).
- Certification or test results are identical between items when normal variations should be expected.
- Document traceability is not clear. The document should be traceable to the item(s).
- Technical data are not consistent with code or standard requirements (e.g., no impact test results provided when impact testing is required or CMTRS physical test data indicate no heat treatment and heat treatment is required).
- Documentation is not delivered as required on the purchase order or is in an unusual format.
- Lines on forms are bent, broken, or interrupted indicating data has been deleted or exchanged (cut and paste).
- Handwritten entries of data are on the same document where typed or preprinted data exists.
- Data on a single line located at different heights indicate the possibility of retyping.

ATTACHMENT F - SUSPECT/COUNTERFEIT PARTS DETECTION (cont.)

Fasteners

- Headmarkings are marred, missing, or appear to have been altered.
- Threads show evidence of dressing or wear (threads should be of uniform color and finish).
- Headmarkings are inconsistent with a heat lot.
- Headmarkings matching one of those identified on the U.S. Customs Service, "Suspect Headmark List" (Figure QP 3.2-1).
  - Headmarkings which depict both raised and hand-stamped markings, such as those described in WHC Quality Assurance Bulletin # 94-01, "Discrepant Dual Head Stamped Stainless Steel Bolts." This bulletin documents the results of internal inspections and independent testing of stainless steel bolts purchased to ASTM A193, Grade B8, which were found to be substandard.
  - Only manufacturers listed on the "Suspect Fastener Headmark List" (Figure QP 3.2-1) are known to produce substandard graded fasteners. If graded fasteners are discovered which exhibit headmarks matching those on the Suspect/Fastener Headmark List, they shall be considered to be defective without further testing, unless traceable manufacturer's certifications are received which provide documented evidence that the fasteners were not produced by the manufacturer listed on the Suspect Fastener Headmark List.
  - Interpretation of headmark/manufacturers listed on the "Suspect Fastener Headmark List," including newly discovered variations thereto, shall only be provided by the designated S/CI coordinator based on guidance received from the DOE.

Electrical Devices

- Connections show evidence of previous attachment (metal upset or marring).
- Connections show arcing or discoloration.
- Fasteners are loose, missing, or show metal upset.
- Molded case circuit breakers are not consistent with manufacturer-provided checklists for detecting substandard/fraudulent breakers.
- Missing or photocopied Underwriters Laboratories (UL) labels on products requiring such.

ATTACHMENT F - SUSPECT/COUNTERFEIT PARTS DETECTION (cont.)

Rotating Machinery and Valve Internal Parts

- Shows marring, tool impressions, wear marks, traces of Prussian blue or lapping compound, or other evidence of previous attempts at fit up or assembly.
- Heat discoloration is evident.
- Evidence of erosion, corrosion, wire-drawing or "dimples" (inverted cone-shaped impressions) on valve discs, seats, or pump impellers.

Valves

- Paint
  - Valve appears to be freshly painted and valve stem has paint on it
  - Wear marks on any painted surface
  - Valve stem is protected, but protection has paint on it
  - Paint does not match standard Original Equipment Manufacturer (OEM) color.
- Valve Tags
  - Tags attached with screws instead of rivets
  - Tags attached in a different location than normal
  - Tags appear to be worn or old
  - Tags with paint on them
  - Tags that look newer than the valve
  - Tags with no part numbers
  - Tags with irregular stamping.
- Hand Wheels
  - Old looking hand wheels on new looking valves
  - Hand wheels that look sand blasted or newer than the valve
  - Different types of hand wheels on valves of the same manufacturer.
- Bolts and Nuts
  - Bolts and nuts have a used appearance (excessive wrench marks on flats)
  - Improper bolt/nut material (e.g., a bronze nut on a stainless stem).

ATTACHMENT F - SUSPECT/COUNTERFEIT PARTS DETECTION (cont.)

- Valve Body
  - Ground off casting marks with other markings stamped in the area (OEM markings are nearly always raised, not stamped)
  - Signs of weld repairs
  - Incorrect dimensions
  - Freshly sand-blasted appearance, including eye bolts, grease fittings, stem, etc.
  - Evidence of previous bolt head scoring on backsides of flanges, or evidence that this area has been ground to remove such marks
  - On a stainless valve, a finish that is unusually shiny indicates bead-blasting. A finish that is unusually dull indicates sand-blasting. The finish on a new valve is in-between.

Manufacturer's Logo

- Missing.
- Logo plate looks newer than the valve.
- Logo plate shows signs of discoloration from previous use.

Other

- Foreign material inside the valve (e.g., metal shavings).
- Valve stem packing that shows all the adjustments have been run out.
- In gate valves, a gate that is off-center when checked through the open end of the valve.
- Obvious differences between valves in the same shipment.

Price

- Price is significantly less than that of the competition.

ATTACHMENT G - FASTENERS

1.0 Counterfeit/Substandard High-Strength Bolts

1.1 General Background

Counterfeit bolts have been found in military and commercial aircraft, surface ships, submarines, nuclear weapon production facilities, bridges, buildings, and the space shuttle. These bolts often do not possess the capabilities of the genuine bolts they counterfeit and can threaten the reliability of industrial and consumer products, National Security, or lives. At Congressional hearings in 1987, the Army testified that they had purchased bolts that bore the headmarks of Grade 8 high-strength bolts, but that were actually inferior Grade 8.2 bolts.

The International Fasteners Institute (IFI) reported finding substandard, mis-marked, and/or counterfeit high-strength Grade 8 bolts in the United States commercial marketplace. In 1988, IFI reported that counterfeit medium- strength Grade 5 bolts had also been found.

Foreign bolts dominate the American marketplace due to their price advantage, and the majority of suspect/counterfeit bolts are imported. Identifying, testing, and replacing these bolts has proven expensive and difficult, both mechanically and technically. Not finding and replacing these bolts, however, has proven fatal in some instances.

1.2 Headmarks

Attachment I may be removed and photocopied, as needed, for use as a poster and reference to known suspect fastener headmarks. Bolts with the headmarkings shown have a significant likelihood of being found to be inferior to standards. Generally, the cost of replacement of these bolts is less than the cost of chemical, hardness, and tensile strength testing. Note also that counterfeit bolts can be delivered with counterfeit certificates. Documentation alone is insufficient to demonstrate compliance with standards.

1.3 Consensus Standards

There are several consensus organizations that have published standards for the properties of fasteners. One of these is the Society of Automotive Engineers (SAE). The SAE grade (or alleged grade on a suspect item) of a bolt is indicated by raised or indented radial lines on the bolt's head, as shown in Attachment I. These markings are called headmarks. DOE is currently concerned with two different grades of fasteners: one has three equally spaced radial lines on the head of a bolt which indicate that it should meet the specifications for a Grade 5 bolt; the other has six equally spaced radial lines which indicate a Grade 8 bolt. Letters or symbols on the head of a bolt indicate the manufacturer.

ATTACHMENT G - FASTENERS (cont.)

Attachment I is a Suspect/Counterfeit Headmark List that was prepared by the United States Customs Service after extensive testing of many samples of bolts from around the nation. Any bolts anywhere in the DOE community that are currently in stock, in bins, or installed that are on the Customs Headmark List should be considered suspect/ counterfeit. The headmarks on this list are those of manufacturers that have often been found to have sold bolts that did not meet the indicated consensus standards. Sufficient testing has been done on the bolts on this list to presume them defective without further testing.

1.4 Precautions: Selective Testing

Some facilities (manufacturers, distributors, etc.) perform selective testing of sample bolts rather than have an independent testing laboratory run all the tests required by consensus standards. In many cases, a new counterfeit bolt has roughly the same physical strength as the graded bolt it mimics, but does not have either the chemical composition or the heat treatment specified by the consensus standards. As a result, it will stretch, exhibit metal fatigue, or corrode under less harsh service than the genuine bolt. Simple tensile strength tests cannot be used to identify substandard high-strength fasteners and should not be solely relied upon in performing acceptance test.

1.5 Using Suspect/Counterfeit Grade 5 Bolts in Grade 2 Applications

Some sites use suspect/counterfeit Grade 5 bolts in applications that only call for Grade 2 bolts. Eventually, the suspect/counterfeit Grade 5 bolts may find its way into an application that requires a genuine Grade 5 bolt and that application may fail. In some cases, cheap imported graded bolts have been purchased in place of upgraded bolts because the small price differential made the extra quality seem to be a bargain. Given the expense of removing suspect bolts from DOE facilities, the practice of using suspect bolts for any application should be discontinued.

1.6 Keep Bolts in Original Packages

All bolts purchased should be kept in the original packages, not emptied into bins. The packages should have labels or other markings that would permit them to be associated with a particular procurement action and a specific vendor. Approved supplier lists should be checked to assure that fastener suppliers on that list have been recently qualified/audited for adequacy of their quality programs.

ATTACHMENT G - FASTENERS (cont.)

2.0 Stainless Steel fasteners

2.1 Purpose

To provide follow-up information to the previous notification sent to the DOE field and contractor organizations in late 1996.

2.2 Background

In November 1993, the Industrial Fastener Institute (IFI) issued a Fastener Advisory regarding 18-8 stainless steel bolts. The advisory warned about a "bait and switch" tactic in which a distributor takes an 18-8 bolt (indicated by two radial lines 90 degrees apart), but no manufacturer's marking, and sells them as ASTM A320 Grade B8 bolts after hand-stamping B8 on to the heads.

As a result of this IFI Advisory, DOE sites conducted a search of facility stores for stainless steel fasteners with hand-stamped B8 grade marks. Hundreds of stainless steel bolts with hand-stamped B8 grade markings, along with a variety of other raised and depressed head and manufacturer's markings were identified in facility stores throughout the DOE complex.

For example, an inspection of shop stock at a Hanford Site facility revealed bolts with three different raised grade markings, 18-8, 304, and F593C, along with raised manufacturer's identifications of CK, H, HP, C, SO, CS, PMC, TH, THE, and a STAR. The majority of the remaining samples found at Hanford exhibited raised grade markings of 18-8 and 304, with a B8 grade marking and manufacturer's identification hand-stamped into the head of the bolt.

Finally, a few samples did not display any manufacturer's markings. Most of the bolts discovered were purchased with the specification to meet a national consensus standard, American Society for Testing and Materials (ASTM) A193, B8 Class 1 rather than the ASTM A320 standard discussed in the IFI warning.

The Savannah River Site also conducted a site-wide search of facility stores with similar results. A total of 159 stainless steel fasteners with hand-stamped B8 grade marks and raised or hand-stamped manufacturer's symbols were found. Fifteen stainless steel fasteners that had no manufacturer's symbol were also found.

ATTACHMENT G - FASTENERS (cont.)

2.3 Issue

The requirements of the ASTM A193 standard regarding fastener marking and certification are very similar those required by the ASTM A320 standard discussed in the IFI advisory. The ASTM A193 standard requires that grade and manufacturer's identification symbols be applied to the heads of bolts that are larger than 1/4" in diameter. The standard, however, does not specifically differentiate between raised and depressed headmarkings, but states only that "for the purposes of identification marking, the manufacturer is considered the organization that certifies the fastener was manufactured, sampled, tested, inspected in accordance with this specification." In other words, the standard allows for some of the required markings to be formed into the head of the bolt (either raised or lowered) during manufacturing, and the rest to be applied later on via hand-stamping.

Since ASTM A193 does not differentiate between raised and depressed markings, these fasteners can be counterfeited in the same way as the ASTM A320 fasteners discussed in the November 1993 IFI warning. For example, distributors can procure 18-8 stainless steel bolts that were manufactured by an anonymous party, and without conducting the necessary upgrading process or certification testing, a second party could hand-stamp B8 and a manufacturer's marking into the heads to indicate that the fasteners exhibit the mechanical and chemical properties required of ASTM A193Grade B8 Class 1.

Unless the certification documentation is specifically requested, and in most cases it is not, there is no way to determine by visual inspection whether these fasteners were properly certified and tested to meet the requirements of the ASTM standard.

ATTACHMENT H - DOE HEADMARK LIST

Help Stamp Out Suspects/Counterfeits

Examples of stainless steel fasteners that have been upgraded from 18-8 to ASTM A320 or ASTM A193 Grade B8 after hand stamping. The last three examples show samples of fasteners to indicate conformance to two non-compatible standards, ASTM A193 and ASTM F 593C.

Any bolt on this list should be treated as defective without further testing and process in accordance with HNF-PRO-301. Note: This list was originally Published by DOE /EH-0196, Issue No. 97-6

If any of these fasteners are located, contact your facility S/CI Point of Contact (POC) for instructions. The POC list is on the Hanford Intranet at: http://docs.rl.gov/han.info/hianoci/hianoci.doc. Scroll to the end of the document for the list.

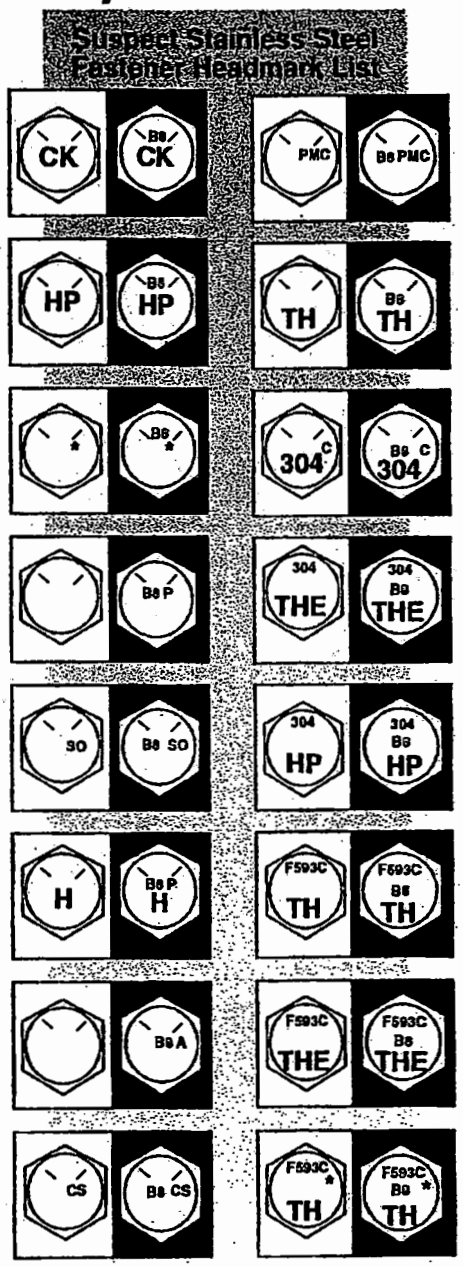

ATTACHMENT H - DOE HEADMARK LIST (cont.)

Help Stamp Out Suspects/Counterfeits

Suspect Fastener Headmark List

All Grade 5 and Grade 8 fasteners of foreign origin which do not bear any manufacturers' headmarks:

Grade 5 Grade 8

Grade 5 fasteners with the following Manufacturers' headmarks:

Mark	Manufacturer	Mark	Manufacturer
J	Jinn Her (TW)	KS	Kosaka Kogyo (JP)

Grade 8 fasteners with the following Manufacturers' headmarks:

Mark	Manufacturer	Mark	Manufacturer
A	Asahi Mgf (JP)	KS	Kosaka Kogyo (JP)
NF	Nippon Fasteners (JP)	RT	Takai Ltd (JP)
H	Hinomoto Metal (JP)	FM	Fastener Co. of Japan (JP)
M	Minamida Sieybo (JP)	KY	Kyoei Mfg (JP)
MS	Minato Kogyo (JP)	J	Jinn Her (TW)
Hollow Triangle	Infasco (CA, TW, JP, YU) (Greater than 1/2-inch diameter Grade 8 Hollow Triangle only)		
E	Daiei (JP)	UNY	Unytite (JP)

Grade 8.2 fasteners with the following headmarks:

Mark	Manufacturer
KS	Kosaka Kogyo (JP)

Grade A325 fasteners (Bennett Denver target only) with the following headmarks:

	Mark	Manufacturer
Type 1	A325 KS	Kosaka Kogyo (JP)
Type 2		
Type 3		

Key: CA-Canada, JP-Japan, TW-Taiwan, YU-Yugoslavia

Any bolt on this list should be treated as defective without further testing.

ATTACHMENT I - REFURBISHED MOLDED CASE CIRCUIT BREAKERS

Investigations thus far of electrical components at DOE facilities uncovered over 700 suspect/ counterfeit molded-case circuit breakers that were previously used, refurbished and sold to DOE contractors.

1. Recognition Factors

The following factors should be recognized regarding suspect or refurbished circuit breakers:

A. The quality and safety of refurbished molded-case circuit breakers is questionable since they are not designed to be taken apart and serviced or refurbished. There are no electrical standards established by Underwriters Laboratory (UL) for the refurbishing of molded-case electrical circuit breakers, nor are there any "authorized" refurbishes of molded case circuit breakers. Therefore, "refurbished" molded-case circuit breakers should not be accepted for use in any DOE facility.

B. One source of refurbished molded-case circuit breakers is from the demolition of old buildings. Some refurbishes are junk dealers who may change the amperage labels on the circuit breakers to conform to the amperage ordered and then merely clean and shine the breakers.

This situation was brought to DOE's attention by the Nuclear Regulatory Commission (NRC), which, in turn, had been informed of the practice by the company that manufactures circuit breakers. In early 1988, a sales representative identified "refurbished" circuit breakers at Diablo Canyon Nuclear Power Plant. A subsequent investigation confirmed that circuit breakers sold to the power plant as new equipment were actually refurbished. The managers of the two firms that refurbished and sold these breakers have been convicted of fraud and have paid a substantial fine.

C. NRC published information Notice No. 88-46 dated July 8, 1988, on the investigation findings and circulated it to all applicable government agencies, including DOE. On July 20, 1988, DOE notified all field offices that refurbished circuit breakers may have been installed in critical systems. Shortly thereafter, DOE established the Suspect Equipment Notification System (SENS), a sub-module of ES&H Events and News on the Safety Performance Measurement System (SPMS). SENS has since been replaced by the Supplier Evaluation and Suspect Equipment (SESE) sub-module which includes Suspect Equipment Reports.

D. Some of DOE's older sites have circuit breakers in use that are no longer manufactured. According to the Nuclear Management and Resources Council (NUMARC), examples of such breakers are Westinghouse breakers with frames E, EA, F, and FA. If a DOE contractor has an electrical box that requires a breaker with one of these frame sizes, that contractor would not have been able to purchase it from Westinghouse for several years. If the contractor were to order a replacement breaker from an authorized Westinghouse dealer, the dealer could not get a new replacement breaker from the manufacturer. To fill the order, the dealer had to turn to the secondary or refurbished market.

ATTACHMENT I - REFURBISHED MOLDED CASE CIRCUIT BREAKERS (cont.)

Dealing with an authorized distributor does not preclude ending up with refurbished circuit breakers. Westinghouse has announced that it is considering satisfying this market by manufacturing circuit breakers that will fit in these applications.

The solution, as recommended by NUMARC, is not to focus on the credentials of the distributor but on the traceability of the circuit breaker itself. A purchaser can be assured of having a new circuit breaker only if the breaker can be traced back to the original manufacturer.

2. Indicators of Refurbished Breakers

Typically, refurbished circuit breakers sold as new equipment have one or more of the following characteristics:

- The style of breaker is no longer manufactured.
- The breakers may have come in cheap, generic-type packaging instead of in the manufacturer's original boxes.
- Refurbished circuit breakers are often bulk-packaged in plastic bags, brown paper bags, or cardboard boxes with handwritten labels. New circuit breakers are packed individually in boxes that are labeled with the manufacturer's name, which is usually in two or more colors, and are often date stamped.
- The original manufacturer's labels and/or the Underwriter's Laboratory (UL) or Factory Mutual (FM) labels may have been counterfeited or removed from the breaker. Refurbishing operations have been known to use copying machines to produce poor quality copies of the original manufacturer's and the certifying body's labels.
- Breakers may be labeled with the refurbisher's name rather than the label of a known manufacturer.
- The manufacturer's seal (often multicolored) across the two halves of the case of the breaker is broken or missing.
- Wire lugs (connectors) show evidence of tampering.
- The surface of the circuit breaker may be nicked or scratched yet have a high gloss. Refurbishers often coat breakers with clear plastic to produce a high gloss that gives the casual observer the impression that the breaker is new. The plastic case of new circuit breakers often have a dull appearance.
- Some rivets may have been removed and the case may be held together by wood screws, metal screws, or nuts and bolts.

ATTACHMENT I - REFURBISHED MOLDED CASE CIRCUIT BREAKERS (cont.)

- Contradictory amperage ratings may appear on different parts of the same refurbished breaker. On a new breaker, the amperage rating is stamped into, raised from, or machine-painted on the handle of the circuit breaker. In order to supply a breaker with a hard-to-find rating, refurbishers have been known to file down the surface of the handle to remove the original rating and hand-paint the desired amperage rating.

3. Testing

In a news release dated February 6, 1989, the National Electrical Manufacturers Association (NEMA) announced the cancellation of its Publication AB-2-1984 entitled, "Procedures for Field Inspection and Performance Verification of Molded-Case Circuit Breakers used in Commercial and Industrial Applications," and stated the following:

"These procedures were intended for use with breakers that had been originally tested and calibrated in accordance with NEMA Standards Publication AB 1 or Underwriters Laboratories Standard UL 489, and not subsequently opened, cleaned or modified...Therefore, the Standards Publication contained none of the destructive test procedures...necessary to verify the product's ability to withstand such conditions as full voltage overload or short circuit. Without such tests, even if a rebuilt breaker had passed the tests specified in AB-2, there would be no assurance that it would not fail under overload or short circuit conditions. It is NEMA's position that regardless of the results of electrical testing, refurbished electrical circuit breakers are not reliable and should not be used."

4. Precautions

Follow these precautions regarding suspect or refurbished circuit breakers.

A. Require that molded-case breakers be new and unaltered. Proof that they are new and unaltered requires the vendor to show traceability back to the original manufacturer.

B. Do not rely completely on dealing with authorized dealers for protection from purchasing refurbished molded-case circuit breakers.

C. Approve formal procedures for inspecting circuit breakers that are received and installed according to the indicators of refurbished breakers listed above.

D. Contact the original manufacturer if any indication of misrepresentation is encountered. There are many original manufacturers of molded-case circuit breakers whose products are being refurbished and sold as new. These manufacturers have the most specific information about how to ensure that their products have not been refurbished.

ATTACHMENT I - REFURBISHED MOLDED CASE CIRCUIT BREAKERS (cont.)

5. Disposition

A. Segregate and retain all circuit breakers found with indications that they may be refurbished. These will be retained as potential evidence until specifically released by the Office of Inspector General and the Office of Nuclear Safety for Price Anderson Enforcement. Circuit breakers that may be refurbished may only be disposed of when the above organizations no longer need them as evidence.

B. Report suspect electrical components to Occurrence Reporting and Processing System (ORPS). The ORPS categorization group should be identified as "Cross-Category items, Potential Concerns or issues." The description of cause section in the ORPS report should included the text "suspect counterfeit parts."

C. Witness and document the destruction of all suspect/counterfeit circuit breakers when approval is given for disposal.

ATTACHMENT J - ASSESSMENT/SURVEILLANCE LINES OF INQUIRY

1. S/CI processes and other S/CI related processes are effective in addressing the safety-related aspects of S/CI.

2. Formal supplier qualification and re-qualification processes are established and implemented, including routine collection of evaluations of feedback on vendor performance.

3. Controls are established on a graded basis that considers the risks involved and historical experience with S/CIs.

4. Controls are implemented for segregation and separate storage of material identified as suspect/counterfeit

5. Subcontractors have established and implemented sufficient controls to preclude an introduction or use of S/CIs. These controls address construction materials, maintenance or modification equipment and components, and the use subcontractor owned or rented equipment (cranes, hoists, etc.) on site.

6. S/CI processes, requirements, and controls are fully integrated into Integrated Safety Management (ISM) and quality assurance programs and procedures, e.g, training, procurement, maintenance, and assessment) to ensure adequate linkage to S/CI elements.

7. Expectations are established for timeliness in determining whether nonconforming items are S/CI.

8. Protocols are established for clearly identifying S/CIs that are determined to be acceptable for use

9. Inspections for S/CI materials are incorporated into routine maintenance activities, and clear guidance is provided for the disposition of installed S/CI materials identified during routine inspections and maintenance activities.

10. Expectations for S/CI controls are integrated within existing processes, such as routine and special inspections for S/CIs in site procedures, and guidance is provided for performing such inspections.

11. Roles and responsibilities and interfaces for management of S/CIs are clearly assigned, including provisions for the handling of sensitive information and interfacing with the local Office of the Inspector General (IG), to ensure effective, consistent, and timely communication of S/CI information.

12. S/CI reporting requirements are effectively integrated into the site contractors' processes for disposition of non-conforming items, such as NCR processes, as required by appropriate DOE directives.

13. Lessons learned processes are evaluated to determine whether all available and relevant information resources, such as the Government Industry Data Exchange Program (GIDEP), are being utilized for screening S/CI and other relevant information for potential applicability to site activities.

ATTACHMENT J – ASSESSMENT/SURVEILLENCE LINES OF INQUIRY (cont.)

14. Lessons learned processes are evaluated to ensure that significant requirements and performance expectations have been established for the documentation of applicability reviews, needed actions, and actions taken for lessons learned that require line management attention and action.

15. Lessons learned requiring line management actions are integrated with the site's corrective action management processes to ensure formal tracking, feedback, and closure of actions taken.

16. Corrective actions and management procedures include formal linkage to S/CI reporting requirements for the site office, Occurrence Reporting System (ORPS), contractor General Counsel, and the IG.

17. Site mechanisms, such as a controlled product list, are established and used to maintain current and accurate information on S/CIs. Provisions are available for making this list readily available to site personnel who have S/CI responsibilities for procurement, inspection, and other areas associated with the implementation of S/CI controls.

18. S/CI training programs-include the identification of positions and associated personnel required to receive training, the processes for designating those personnel who must receive initial and refresher training, and the required frequencies for refresher training.

19. All personnel involved in design, system engineering, procurement, inspection, maintenance, and other functions involving potential S/CI materials receive S/CI process and hands-on training.

20. Training programs place special emphasis on ensuring that system engineers involved in the design, procurement, and inspection of materials and components with the potential for S/CI receive such training.

21. Subcontractors involved in the procurement or handling of potential S/CI materials and components receive initial and refresher training and are knowledgeable of site S/CI processes, procedures, requirements, and controls.

22. S/CI training addresses site-specific processes and procedures for identifying, dispositioning, and reporting S/CIs, including reporting to the IG.

23. S/CI processes are subject to regular self-assessment, consistent with site self-assessment protocol.

24. Assessments are performed for S/CI processes to evaluate significant changes to the S/CI processes and to establish a baseline for implementation where appropriate. Based on that baseline review, further assessments are tailored to the maturity of the S/CI processes.

25. S/CI lines of inquiry are considered and evaluated, as appropriate, during assessments of areas that interface with S/CI processes (procurement process, NCR process, etc.).

DMJM technology

amec

TECHNICAL SPECIFICATION

PROJECT:	Final DBVS Design	145579-D-SP-036	REV. 1
PROJECT NO.:	145579	OFF-GAS TREATMENT SYSTEM HEPA FILTER SKID ASSEMBLY DESIGN AND FABRICATION	
CLIENT:	AMEC E&E - Richland, Washington		

Appendix F

Request for Information

(2 pages including cover)

DMJMtechnology

amec

TECHNICAL SPECIFICATION

PROJECT:	**Final DBVS Design**	**145579-D-SP-036**	**REV. 1**
PROJECT NO.:	**145579**	**OFF-GAS TREATMENT SYSTEM HEPA FILTER SKID ASSEMBLY DESIGN AND FABRICATION**	
CLIENT:	**AMEC E&E - Richland, Washington**		

REQUEST FOR INFORMATION

Project # RFI.XXX
Rev. ___
Page 1 of 1

Contract/Project No.

TO BE COMPLETED BY SUBCONTRACTOR

Insert Title of RFI Here

Originator (Name) & Company:

Problem/Deficiency: ☐ Clarification ☐ Change

Proposed Solution:

Basis of Change:

Note: Subcontractor to provide cost and schedule impacts associated with each discrete change line item.
Response: ☐ Clarification ☐ Change COST ☐ Yes ☐ No SCHEDULE ☐ Yes ☐ No
Required Response Date:

Cost Impact	Schedule Impact

Subcontractor (sign/date)

TO BE COMPLETED BY THE BUYER

RFI Approved ☐ Yes ☐ No CN Required: ☐ - CN # ____ CN Not Required: ☐ As-Built documentation Required: ☐ As-Built documentation Not Required: ☐ Submittal Data Required: ☐ Yes ☐ No	COMMENTS Design Lead / Proj Mgr / Date

RFI.Feb 2004

DMUM technology

amec

TECHNICAL SPECIFICATION

PROJECT:	**Final DBVS Design**	**145579-D-SP-036**	**REV. 1**
PROJECT NO.:	**145579**	**OFF-GAS TREATMENT SYSTEM HEPA FILTER SKID ASSEMBLY DESIGN AND FABRICATION**	
CLIENT:	**AMEC E&E - Richland, Washington**		

Appendix G

Instrumentation Naming and Tagging Convention

(3 pages including cover)

G1 EQUIPMENT IDENTIFICATION NUMBER

The equipment identification number (EIN) is comprised of three fields, SYSTEM-COMPONENT-SEQUENCE. Where SYSTEM is the plant Area 00, 31-37, COMPONENT is the ISA-loop function code, and SEQUENCE is the device number within the Area.

Example: Waste dryer Area 33 Instrument Junction Box 33-IJB-001.

Note: The Hanford FARM and LOCATION fields do not apply to the Demonstration Bulk Vitrification System and have been dropped from this convention.

G2 CABLE TAGGING

Cables shall be tagged using From Source & To Destination information. The format will be "FROM-TO" or "FROM-TO-##" if more than one cable run.

Example:

Two Cables:	From	36-CAB-123 to 36-IJB-123
Cable Tag:		"36CAB123-36IJB123-C1"
Cable Tag:		"36CAB123-36IJB123-C2"

G3 WIRE TAGGING

Wires will be tagged using the equipment tag and polarity.

Example 1: Wires connected from instrument 36-FIT-123 (24V dc)

Positive Tag "36FIT123(+)"
Negative Tag "36FIT123(-)"

Example 2: Wires connected from instrument 36-LSH-123 (110V ac)

Positive Tag "36LSH123(H)"
Negative Tag "36LSH123(N)"

G4 NOTES

1. Cables shall be identified with cable tag number "source-destination-type." Types will be as follows:

   M = Motor Feeder Cable; L = Local Control Station Cable; MH = Motor Stator Heater; RTD = Motor Winding Temperature Detector; MA = Motor Armature Cable; MF = Motor Field Cable; C = Control Cable; F = General Feeder Cable; A = Ammeter Cable; T = Tachometer Cable; COM = Communications Cable; RS484, Ethernet, Fibre.

2. Analog cables from junction box to field instrument will only be tagged with the instrument tag number

3. Cables will be tagged on both ends with the same cable tag number.

4. Equipment, motor, and instrument tag numbers shown are for illustration purposes only. Use project specific equipment, motor, and instrument tags.

145579-036-CN-001

RECORD COPY
T.2.3.14

DMJM technology

CHANGE NOTICE

Page 1 of 2

CN No.
145579-036-CN-001

Change Notice (CN) Category (Check One) Supplemental ☒ Direct Revision ☐ Cancel ☐ Quality Program Procedure Change ☐	Originator's Name and Signature. Jack McConwell *Jack McConwell*		Date 03/07/2005
Affects Cost? Yes ☒ No ☐	Project Title/ Project No. Demonstration Bulk Vitrification System / 145579	Design Verification Required (Independent Review) Yes ☐ No ☒	Safety Class (If Rq'd) N/A
Affects Schedule? Yes ☐ No ☒	Primary Document Changed by this CN (Include sheet no. and rev)	Affected Documents Superseded	Contract No.
Other Documents Affected by this CN: N/A	OGTS HEPA Filter Skid Specification 145579-D-SP-036, Rev 1	Yes ☐ No ☒	

Reason for Change:

1) Fabricator requested, in RFI 23410.OGTS.PTI-RFI-004, R0, that the HEPA filter housing Level Switches be relocated to the condensate lines below the housing rather than an extra penetration in the Filter housing. The relocation of the level switch will remove a potential leak path from the HEPA filter housing and allow detection of leaks prior to loading the bottom of the filter housing with condensate.

Detailed Description of Change (Use Continuation Sheet as Applicable):

Section 3.3.1.1.1.10: Delete all text in paragraph and Change paragraph to read, "Not used."

Appendix A, Drawing DBVS-SK-P102, Rev C, move location of level switches LSH-402A, -402B, -404A, and -404B from the filter housing to the condensate drain pipe above the condensate valve as shown on page 2 of this CN.

Review/Approval Authorities: A = Approval, R = Review, I = Information (Check where applicable for change notice)

Printed Name/Signature	Date	R	A	I	Printed Name/Signature	Date	R	A	I
Originator Jack McConwell *Jack McConwell*	3/7/05	☐	☒	☐	Process Technology Manager NA		☐	☐	☐
Project Manager Jim Frederickson *J. R. Frederickson*	3/7/05	☐	☒	☐	Independent Review* NA		☐	☐	☐
Program Director NA		☐	☐	☐	Professional Engineer, if required NA		☐	☐	☐
Discipline Lead Kurt McCracken *Jerald Lang PER TELECON*	3/7/05	☐	☒	☐	HNR Program Director NA		☐	☐	☐
Quality Assurance Ross Trutt *Ross Trutt*	3/7/05	☐	☒	☐	Client AMEC	3/9/05	☐	☒	☐
Manager of Projects NA		☐	☐	☐	Client CH2M HILL		☐	☒	☒

* Design Verification per EP 3.9 required? Yes ☐ No ☒ Assign Independent Reviewer *3/10/05*

CN Incorporated? PM or designee sign and date:_____

Pic 2.55

EP 3.8.1F October 2003

CHANGE NOTICE CONTINUATION SHEET

PAGE 2 OF 2

CN 145579-036-CN-001		
DATE 03-07-05		
DRAWING NO DBVS-SK-P102	SH 1	REV C

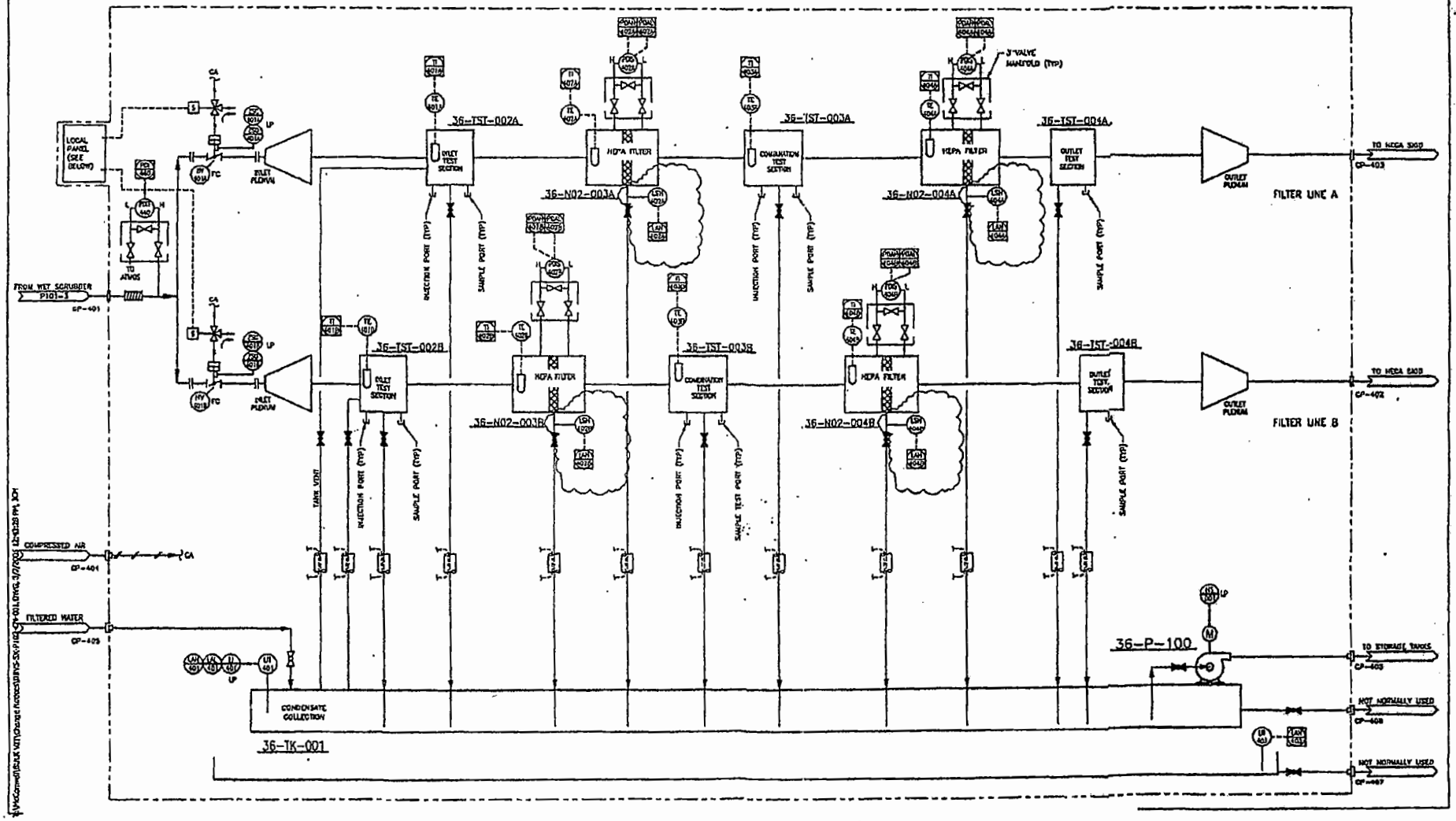

DMJM technology

23410.OGTS.PTI-RFI.004
Rev. 0
Page 1 of 2

Contract/Project No. 23410 (Subcontract No. 05-32SC-A79787)

Level Switch Location in HEPA Filter Housings

Originator (Name) & Company: Jeff Schutte; Premier Technology, Inc.

Problem/Deficiency: ☐ **Clarification** ☒ **Change**

Level switches LSH 402A, 402B, 404A & 404B located in the filter housing (as shown on the P&ID – DBVS-SK-P102 Rev. C) will be difficult to access and maintain.

Proposed Solution

Premier would like to suggest that the level switches be moved to a "T" (between filter housing and valve) in each of the respective condensate drain lines. This will improve access while maintaining the desired function. Also for information, the proposed type of level switch is attached.

Basis of Change:

Ease of access and fabrication.

RFI 2/03

DMJM technology

23410.OGTS.PTI-RFI.004
Rev. 0
Page 2 of 2

TO BE COMPLETED BY SUBCONTRACTOR

Note: Subcontractor to provide cost and schedule impacts associated with each discrete change line item.

Response: ☐ Clarification ☒ Change **COST** ☐ Yes ☒ No **SCHEDULE** ☐ Yes ☒ No

Required Response Date: 3/9/05

Cost Impact	Schedule Impact
None	None

Subcontractor (sign/date) Jeff Schutte 3/7/05

TO BE COMPLETED BY THE BUYER

RFI Approved ☒ Yes ☐ No

CN Required: ☒ - CN # 145579-036-CN-001

CN Not Required: ☐

As-Built documentation Required: ☐

As-Built documentation Not Required: ☐

Submittal Data Required: ☐ Yes ☐ No

COMMENTS

The attached Level switch is acceptable if it Interfaces with an Allen Bradley 1794-IB16 Flex I/O Interface card.

[illegible] 3/7/05

Design Lead/Proj Mgr/Date

RFI 2/03

Technical
Information
TI 244F/00/en

Limit Switch liquiphant T FTL 260

Vibration limit switch for liquids
The maintenance-free alternative to float switches

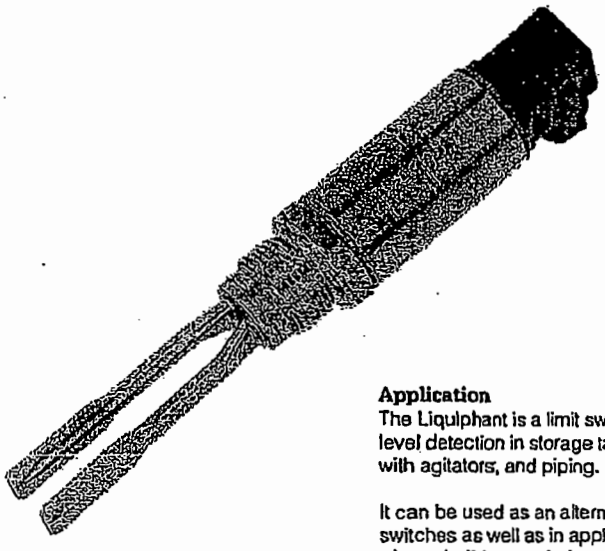

Application
The Liquiphant is a limit switch for liquid level detection in storage tanks, tanks with agitators, and piping.

It can be used as an alternative to float switches as well as in applications where build-up, turbulence, liquid flow and gas bubbles are present.

Features and Benefits
- Small, slender design: low space requirement, easy mounting in places with limited access
- Stainless steel housing: rugged
- Switching status and external testing: simple control
- Plug connection: low-cost connection

Measuring System
The Liquiphant FTL 260 is a compact limit switch, to which miniature contactors, magnetic valves and programmable logic controllers (PLC) can be directly connected.

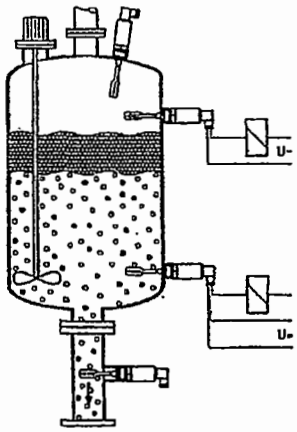

Endress+Hauser
The Power of Know How

Function and Dimensions

The symmetrical vibrating fork is excited to its resonant frequency which changes when the fork is submerged in liquid. The change is registered by the electronics, which actuate an electronic switch.

The Liquiphant FTL 260 can be operated in both minimum or maximum fail-safe mode, i.e. the electronic switch opens on reaching the limit value, in cases of fault or a loss of power.

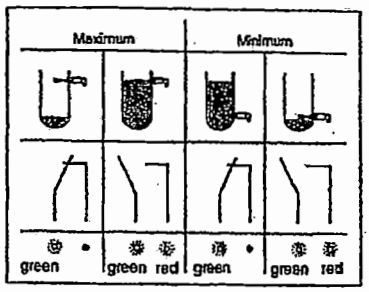

Diagram showing the function of the electronic switch and LED depending on the level and fail-safe mode

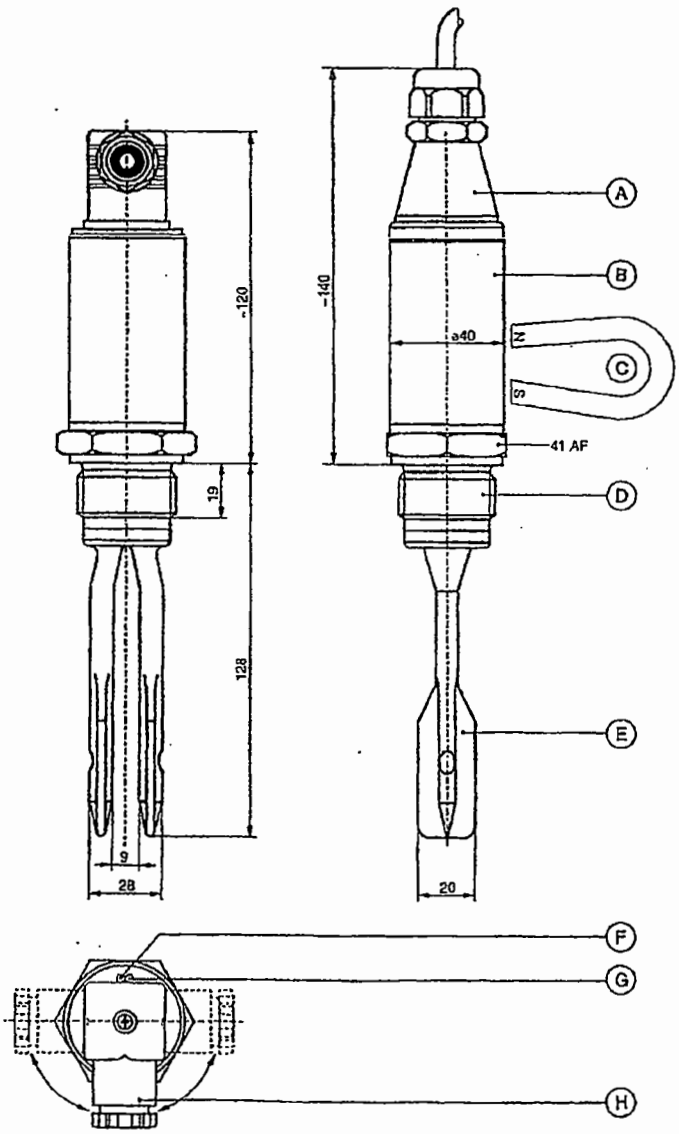

A Electrical connection with a standard plug and with cable gland Pg 11 (IP 65 / 67) or permanently attached cable (IP 68). The fail-safe mode is determined by the way the connection is wired

B The stainless steel housing protects the potted electronics

C The switching function can be checked externally by placing a magnet on the housing

D Process connection versions:
G 1 A (parallel)
1 - 1½ NPT (tapered)
R 1 (tapered)
in stainless steel

E Vibrating fork in solid stainless steel

F Green LED "Operating mode"

G Red LED to indicate switching mode "Circuit open"

H The plug housing can also be fitted offset by ±90°

Dimensions in mm
100 mm = 3.94 in
1 in = 25.4 mm

Technical Data

Output AC version

Power supply	Voltage at terminals 19 ... 253 V, 50 / 60 Hz, current consumption (stand-by) max. 4 mA
Connectable load (load switched over thyristor directly into the power supply circuit)	Short-term (40 ms): max. 1.5 A; max. 375 VA at 250 V or max. 36 VA at 24 V (no short-circuit protection) Continuous: max. 87 VA at 250 V (350 mA), max. 8.4 VA at 24 V (350 mA) min. 2.5 VA at 250 V (10 mA), min. 0.5 VA at 24 V (20 mA) Voltage drop across FTL 260: max. 12 V Residual current: max. 4 mA with open thyristor (stand-by)

Output DC version

Power supply	10 ... 55 V, ripple max. 1.7 V, 0 ... 400 Hz, current consumption max. 15 mA, reverse polarity protection
Connectable load (The load is switched via PNP-transistor)	Short-term (1 ms): max. 1 A, max. 55 V (overload and short-circuit protection) Continuous: max. 350 mA max. 0.5 µF at 55 V, max. 1µF at 24 V Residual voltage: < 3 V (with closed transistor) Residual current: < 100 µA (with open transistor)

Output

Fail-safe mode	Minimum or maximum fail-safe mode, depending on load connection
Signal failure	Output open
Switching time	Approx. 0.5 s when covered, approx. 1.0 s when free
Hysteresis	Approx. 4 mm with vertical mounting

Process conditions

Orientation	As required
Ambient temperature	-40 °C ... +70 °C, see also graphs on Page 3
Temperature of product	-40 °C ... +150 °C, see also graphs on Page 3
Operating pressure p_e	- 1 bar ... +40 bar, see also graphs on Page 3
Storage temperature	-40 °C ... +85 °C
Climatic protection	Climatic protection to IEC 68, Part 2-38, Fig. 2a
Ingress protection to EN 60529	With plug (cable gland Pg 11) IP 65 / IP 67, with cable IP 68 (24 h, 1.5 m)
Electromagnetic Compatibility	By attaching the CE Mark, Endress+Hauser confirms that the Liquiphant FTL 260 fulfils all legal requirements of EC directives. Interference immunity to EN 50082-2 (field strength 10 V/m). Interference emission to EN 50081-1
Density ρ of product	min. 0.7 g/cm³
Viscosity ν of product	up to 10000 mm²/s

Mechanical construction

Design	Compact unit, mounted using a 41 AF box spanner or open end spanner
Dimensions	See dimensional sketch on Page 2
Weight	Approx. 0.45 kg
Materials	Process connection and vibrating fork: stainless steel 1.4571, 1.4581 (AISI 316 Ti) Housing: stainless steel 1.4404 (AISI 316 L), Housing cover: PPSU Plug: PA, Plug seal: elastomer Flat seal ring for process connection G 1 A: elastomer-fibre, asbestos-free, resistant to oils, solvents, vapours, weak acids and alkalis
Process connections	Parallel thread G 1 A to DIN ISO 228/1 with flat seal 33x39 to DIN 7603 Tapered thread 1 - 11½ NPT to ANSI B 1.20.1 Tapered thread R 1 to DIN 2999 Part 1
Electrical connection	4-pole plug connection to DIN 43650-A, ISO 4400 with cable gland Pg 11, for cable diameters 6 to 9 mm, max. wire cross section 1.5 mm² or 5 m permanently attached cable, 4 x 0.75 mm²

Ordering

Product structure	See product structure on Page 3
Accessories	Box spanner 41 AF - order number 942 667-0000 Test magnet - order number 016920-0000
Supplementary Documentation	System Information "Liquiphant" SI 007F/00/e

Endress+Hauser
GmbH+Co.
Instruments International
P.O. Box 2222
D-79574 Weil am Rhein
Germany

Tel. (07621) 975-02
Tx 773926
Fax (07621) 975-345
http://www.endress.com
info@ii.endress.com

Endress+Hauser
The Power of Know How

08.99/MTM

TI 244F/00/en/11.99
EHF/CVS

Installation

The Liquiphant FTL 250 can be mounted in any position in a tank or in a section of piping.

A Vertical mounting

B Horizontal mounting

C Mounting in a 1" nozzle (A to C for the entire range of viscosities up to 10000 mm²/s)

D Flanged mounting in a nozzle (Liquiphant screwed into blind flange), Range of viscosities at DN 50 up to max. 2000 mm²/s

E For easy mounting in limited space: mount with 41 AF box spanner (Endress+Hauser accessory)

▶ Switchpoint

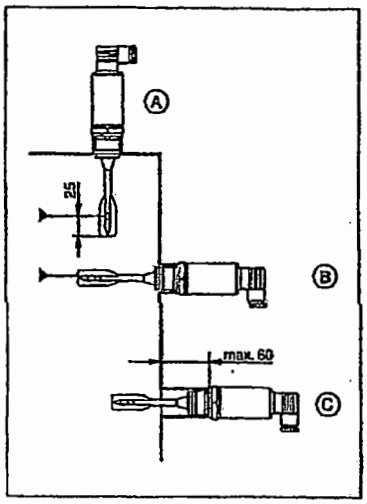

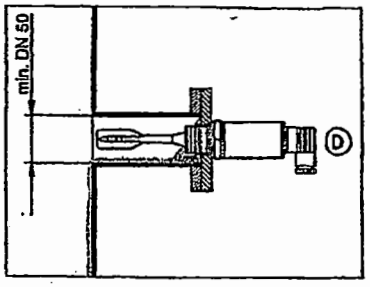

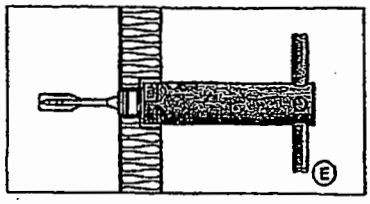

Electrical Connection

Electrical connection depending on version and fail-safe mode

Max. = maximum fail-safe mode

Min. = minimum fail-safe mode

② = cable connection

BU = blue
BK = black
BN = brown
GNYE = green/yellow

⓪ = plug connection

R = external load

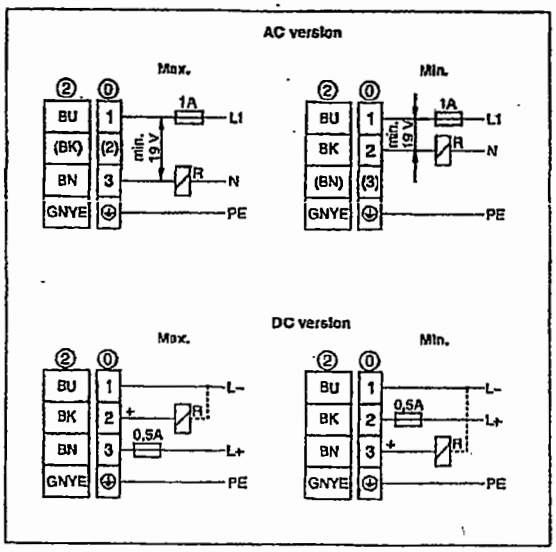

AC Version

A load must be connected in series with the Liquiphant, whereby:

- the voltage drop across the Liquiphant in closed mode (ON) may be up to 12 V
- a minimum terminal voltage of 19 V is required for the unit to switch correctly (check in particular for a low line voltage).

In open mode (OFF) a residual current of max. 3.8 mA flows.

DC Version

Recommended when used with programmable logic controllers (PLC). Positive signal at the switching output of the Liquiphant (PNP).

The fail-safe mode is determined by the way the output is connected up.

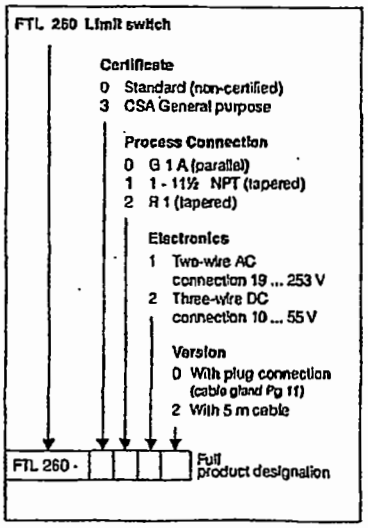

Product structure

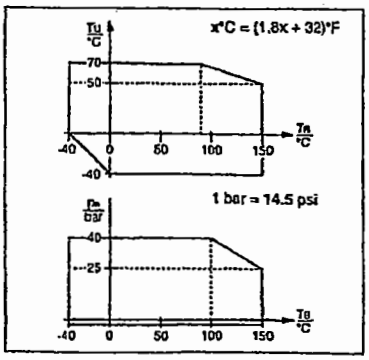

Top graph: Permissible values for ambient temperature T_u at housing are dependent on the operating temperature T_B in the tank

Bottom graph: Permissible values for operating pressure p_a are dependent on the operating temperature T_B in the tank

145579-036-CN-002

RECORD COPY

T.2.3.H

DMJM technology	CHANGE NOTICE	CN No. 145579-036-CN-002
	Page 1 of 2	2/15/06

Change Notice (CN) Category (Check One)	Originator's Name and Signature.		Date
Supplemental ☒	Jack McConwell		04/15/2005
Direct Revision ☐			
Cancel ☐			
Quality Program Procedure Change ☐	Project Title/ Project No.	Design Verification Required (Independent Review)	Safety Class (If Rq'd)
Affects Cost? Yes ☐ No ☒	Demonstration Bulk Vitrification System / 145579	Yes ☐ No ☒	N/A
Affects Schedule? Yes ☐ No ☒	Primary Document Changed by this CN (include sheet no. and rev)	Affected Documents Superseded	Contract No.
Other Documents Affected by this CN: N/A	OGTS HEPA Filter Skid Specification 145579-D-SP-036, Rev 1	Yes ☐ No ☒	

Reason for Change:

1) Fabricator requested, in RFI 23410.OGTS.PTI-RFI-014, R0, the use of 1" thick insulation material on the condensate lines. Based on the heat trace calculations using 1" at an R-value of 3.7 in lieu of 6.0 does not significantly impact the calculated heat trace wattage.

Detailed Description of Change (Use Continuation Sheet as Applicable):

Change paragraph 3.3.1.1.9.2 as follows:

The insulation material shall have a minimum ~~"R" value of 6~~ **thickness of 1"** and shall meet the requirements of the Midwest Insulation Contractors Association for materials, design, and application, and shall not interfere with the operating, testing, maintenance, and service of any components or systems. Insulation shall be removable and re-installable from components requiring periodic maintenance and inspection. Insulation material shall be free of halogenated hydrocarbons.

Review/Approval Authorities: A = Approval, R = Review, I = Information (Check where applicable for change notice)

Printed Name/Signature	Date	R	A	I	Printed Name/Signature	Date	R	A	I
Program Director: Michael Wiemers		☐	☐	☐	Independent Review*:		☐	☐	☐
Project Manager: Jim Frederickson	4/15/05	☐	☒	☐	AMEC E&E PM or designee for Bill Bishop	4/15/05	☐	☒	☐
Mechanical Engineering Manager: Ja-Kael Luey	4/15/05	☐	☒	☐	AMEC E&E QA or designee	4/18/05	☐	☒	☐
Electrical Engineering Manager: Dave King		☐	☐	☐	CH2M HILL Environmental or designee N/A DHS		☐	☐	☐
Process Technology Manager: Karyn Wiemers		☐	☐	☐	CH2M HILL PM or designee DHS	4/18/05	☐	☒	☐
Quality Assurance: Ross Truitt	4/15/05	☐	☒	☐	Other		☐	☐	☐

* Design Verification per EP 3.9 required? Yes ☐ No ☒ Assign Independent Reviewer

CN Incorporated? PM or designee sign and date:_____

Pic 255

EP 3.8.1F October 2003

145579-036-CN-003

T.2.3.14

RECORD COPY

L

DMJM technology	CHANGE NOTICE Page 1 of 2	CN No. 145579-036-CN-003

Change Notice (CN) Category (Check One)	Originator's Name and Signature.		Date
Supplemental ☒ Direct Revision ☐ Cancel ☐ Quality Program Procedure Change ☐	Jack McConwell Jack McConwell 4/19/05		04/19/2005
Affects Cost? Yes ☐ No ☒	Project Title/ Project No. Demonstration Bulk Vitrification System / 145579	Design Verification Required (Independent Review) Yes ☐ No ☒	Safety Class (If Rq'd) N/A
Affects Schedule? Yes ☐ No ☒	Primary Document Changed by this CN (include sheet no. and rev)	Affected Documents Superseded	Contract No.
Other Documents Affected by this CN: N/A	OGTS HEPA Filter Skid Specification 145579-D-SP-036, Rev 1	Yes ☐ No ☒	

Reason for Change:

1) Fabricator requested, in RFI 23410.OGTS.PTI-RFI-015, R0, that the fluid service category and testing requirements be evaluated for the piping services on the HEPA filter skid.

Detailed Description of Change (Use Continuation Sheet as Applicable):

Change the specification to allow the compressed air and filtered water systems to be designed, fabricated, installed, inspected, examined, and tested in accordance with ASME B31.3 Category D fluid service. This fluid service for these two systems is consistent with the designations throughout the DBVS project. The condensate collection piping will remain ASME B31.3 "Normal Fluid Service." The additional sensitive leak test imposed on the condensate collection piping will be deleted from the specification, however, the pressure decay test on the condensate collection system will remain. For changes to the specification see the continuation sheet.

Review/Approval Authorities: A = Approval, R = Review, I = Information (Check where applicable for change notice)

Printed Name/Signature	Date	R	A	I	Printed Name/Signature	Date	R	A	I
Program Director: Michael Wiemers		☐	☐	☐	Independent Review*:		☐	☐	☐
Project Manager: Jim Frederickson J.M. Frederickson	4/19/05	☐	☒	☐	AMEC E&E PM or designee M.E. Bierbaum 4-21-05		☐	☒	☐
Mechanical Engineering Manager: Ja-Kael Luey Ja-Kael Luey	4/19/05	☐	☒	☐	AMEC E&E QA or designee Cindy Taylor	4/21/05	☐	☒	☐
Electrical Engineering Manager: Dave King		☐	☐	☐	CH2M HILL Environmental or designee		☐	☐	☐
Process Technology Manager: Karyn Wiemers		☐	☐	☐	CH2M HILL PM or designee MWL	4/25/05	☐	☒	☐
Quality Assurance: Ross Truitt	4/19/05	☐	☒	☐	Other		☐	☐	☐

* Design Verification per EP 3.9 required? Yes ☐ No ☒ Assign Independent Reviewer

CN Incorporated? PM or designee sign and date:_____

Pic 8.55

EP 3.8.1F October 2003

DVM technology

CONTINUATION SHEET CHANGE NOTICE

CN No. 145579-036-CN-003
Page 2 of 2

1. Change Paragraph 3.3.1.2 as follows:

"3.3.1.2 Piping – Design

Piping systems for the system and interconnecting piping for the Condensate Collection **system piping**~~, Filtered Water and Compressed Air Systems~~ shall be designed, fabricated, inspected, examined, and tested in accordance with the ASME B31.3 piping code for "Normal Fluid Service." **Piping systems for the system and interconnecting piping for the Filtered Water and Compressed Air Systems shall be designed, fabricated, inspected, examined, and tested in accordance with the ASME B31.3 piping code for "Category D Fluid Service."** Piping systems include all piping components and supports. The minimum design pressure for the HEPA filter skid piping and components, including instrumentation shall be determined by the Seller for the design flow rate. The design temperature shall be determined by the Seller for the design flow rate taking into account insulation, air stream temperature, and environmental conditions."

2. Change Paragraph 4.2.3 as follows:

4.2.3 Pressure-leak Test

The HEPA filter skid assembly **Condensate Collection system** piping and components shall be pressure-leak tested in accordance with the ASME B31.3 piping code for "Normal Fluid Service." ~~A sensitive leak test in accordance with Section 345 of the piping code is required for all condensate drain piping; a soap bubble test has sufficient sensitivity.~~ **The HEPA filter skid assembly Compressed Air and Filtered Water system piping and components shall be pressure-leak tested in accordance with the ASME B31.3 piping code for "Category D Service."**

Results shall be recorded and shall be submitted to the Buyer with test records/documents.

EP 3.8-1F October 2003

145579-036-CN-005

UNCONTROLLED COPY FOR INFORMATION ONLY

DMJM technology

CHANGE NOTICE

Page 1 of 2

CN No. 145579-036-CN-005

Change Notice (CN) Category (Check One) Supplemental ☒ Direct Revision ☐ Cancel ☒ Quality Program Procedure Change ☐	Originator's Name and Signature. Jack McConwell		Date 05/17/2005
Affects Cost? Yes ☒ No ☐	Project Title/ Project No. Demonstration Bulk Vitrification System / 145579	Design Verification Required (Independent Review) Yes ☐ No ☒	Safety Class (If Rq'd) N/A
Affects Schedule? Yes ☐ No ☒	Primary Document Changed by this CN (include sheet no. and rev)	Affected Documents Superseded	Contract No.
Other Documents Affected by this CN: N/A	OGTS HEPA Filter Skid Specification 145579-D-SP-036, Rev 1	Yes ☐ No ☒	

Reason for Change:

1) During the design review of the Project's 90% design for the Off-Gas Treatment System, the fail position of the inlet valves to the HEPA filter housing was changed from fail closed to the fail open position.
2) Change equipment identification to match the AMEC generated P&ID, F-145579-36-A-0107, Rev C.
3) The P&ID is also being updated to reflect the Vendor's 90% design submittals.

Detailed Description of Change (Use Continuation Sheet as Applicable):

1. Cancel CN 145579-036-CN-004
2. Change Valves HV-401A and HV-401B to HV-313 and HV-309 respectively and from Fail Closed (FC) to Fail Open (FO) to match AMEC drawing F-145579-36-A-0107, Rev C.
3. Add Valve and instrument numbers to match AMEC drawing F-145579-36-A-0107, Rev C.
4. Add Quick connect numbers for all quick disconnects to match AMEC drawing F-145579-36-A-0107, Rev C.
5. Add depiction of Condensate collection tank pump within a pump enclosure.
6. Add sight glass to P&ID as called out in the Specification paragraph 3.3.1.1.8.2

Review/Approval Authorities: A = Approval, R = Review, I = Information (Check where applicable for change notice)

Printed Name/Signature	Date	R	A	I	Printed Name/Signature	Date	R	A	I
Program Director: Michael Wiemers		☐	☐	☐	Independent Review*:		☐	☐	☐
Project Manager: Jim Frederickson	5/17/05	☐	☒	☐	AMEC E&E PM or designee		☐	☒	☐
Mechanical Engineering Manager: Ja-Kael Luey	5/17/05	☐	☒	☐	AMEC E&E QA or designee		☐	☒	☐
Electrical Engineering Manager: Dave King		☐	☐	☐	CH2M HILL Environmental or designee		☐	☐	☐
Process Technology Manager: Karyn Wiemers		☐	☐	☐	CH2M HILL PM or designee	5/17/05	☐	☒	☐
Quality Assurance: Ross Truitt FOR	5/17/05	☐	☒	☐	Other		☐	☐	☐

* Design Verification per EP 3.9 required? Yes ☐ No ☒ Assign Independent Reviewer

CN Incorporated? PM or designee sign and date:_____

Pic 255

EP 3.8.1F October 2003

CHANGE NOTICE CONTINUATION SHEET PAGE 2 OF 2

CN	145579-036-CN-005	
DATE	05-16-05	
DRAWING NO	SH	REV
DBVS-SK-P102	1	C

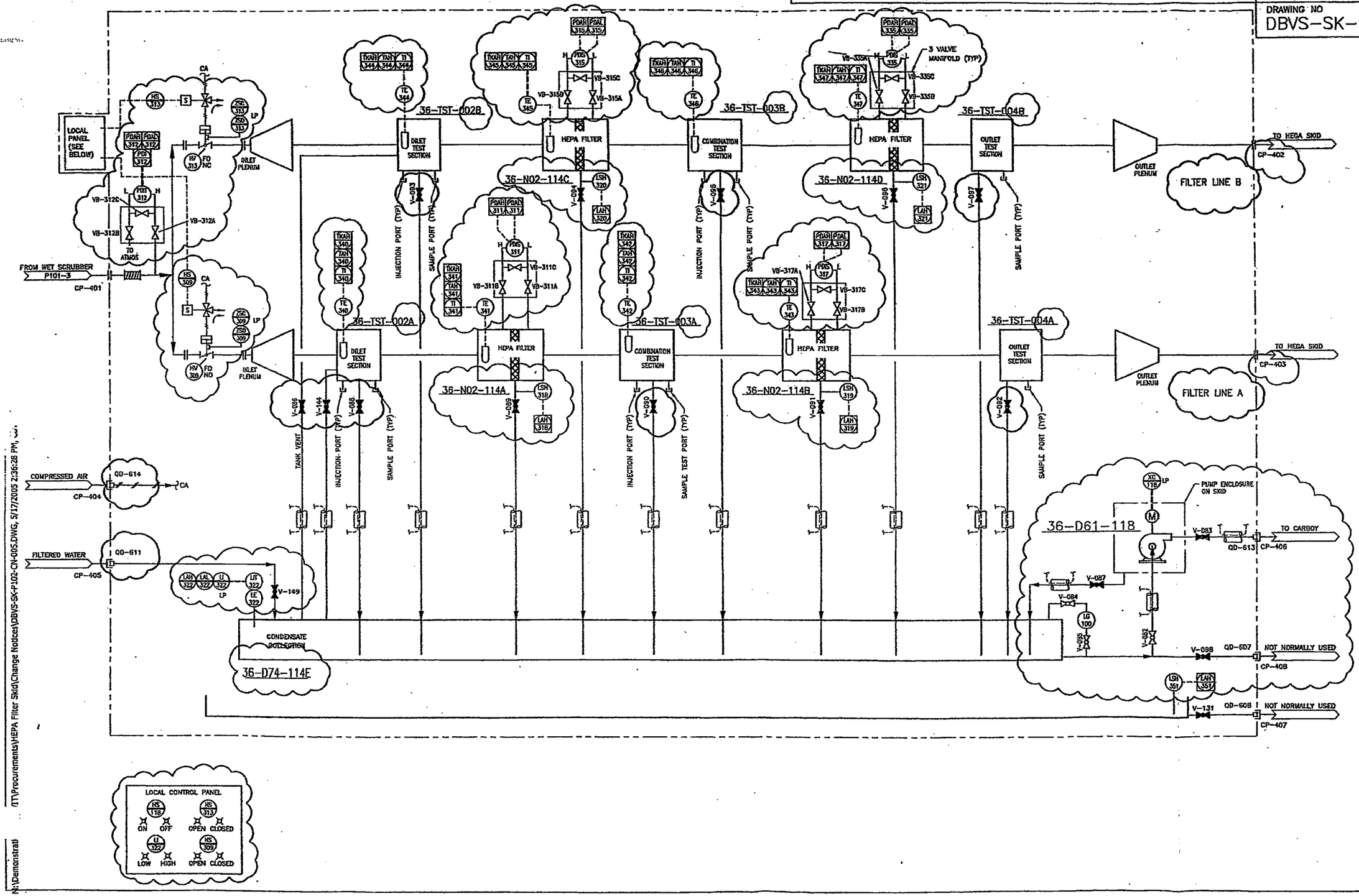

145579-036-CN-006

BNFM technology	CHANGE NOTICE Page 1 of 2	CN No. 145579-036-CN-006

Change Notice (CN) Category (Check One)	Originator's Name and Signature.		Date
Supplemental ☒ Direct Revision ☐ Cancel ☐ Quality Program Procedure Change ☐	Jack McConwell *Jack McConwell*		01/12/2006
Affects Cost? Yes ☒ No ☐	Project Title/ Project No. Demonstration Bulk Vitrification System / 145579	Design Verification Required (Independent Review) Yes ☐ No ☒	Safety Class (If Rq'd) N/A
Affects Schedule? Yes ☐ No ☒	Primary Document Changed by this CN (include sheet no. and rev)	Affected Documents Superseded	Contract No.
Other Documents Affected by this CN: N\A	OGTS HEPA Filter Skid Specification 145579-D-SP-036, Rev 1	Yes ☐ No ☒	

Reason for Change:

1) Incorporate International shipping standards to the specification in accordance with the response to RFI-23.

2) Add normally closed tank vents and valves to the condensate and secondary confinement tanks per client comments to FAT.

Detailed Description of Change (Use Continuation Sheet as Applicable):

1. Specification 145579-D-SP-036, Revision 1, change paragraph 5.3.1 as follows:

5.3.1 The Seller shall **require vendors/suppliers to** package equipment **for international transportation in solid wood crates to the Seller's facility** to protect items during shipping. **The seller shall package equipment for shipment to the buyer to protect items during shipping.** Bracing structures shall be installed where items could be damaged or vibrate loose during transportation. All bracing must be clearly identified, both in the packaging instruction and by labeling on the outside of the **crates** ~~receipt tanks~~.

2. Specification 145579-D-SP-036, Revision 1, Appendix A, change drawing DBVS-SK-P102, Rev C as shown on Page 2 of this ECN

Review/Approval Authorities: A = Approval, R = Review, I = Information (Check where applicable for change notice)

Printed Name/Signature	Date	R	A	I	Printed Name/Signature	Date	R	A	I
Program Director:		☐	☐	☐	Independent Review*:		☐	☐	☐
Project Manager: Jim Frederickson *J.R. Fred*	1/12/06	☐	☒	☐	AMEC E&E PM or designee		☐	☒	☐
Mechanical Engineering Manager: Ja-Kael Luey *Ja-Kael Luey*	1/12/06	☐	☒	☐	AMEC E&E QA or designee		☐	☒	☐
Electrical Engineering Manager: Dave King		☐	☐	☐	CH2M HILL Environmental or designee		☐	☐	☐
Process Technology Manager:		☐	☐	☐	CH2M HILL PM or designee		☐	☐	☐
Quality Assurance: *Nena Blumenthal*	1/12/06	☐	☒	■	Other		☐	☐	☐

* Design Verification per EP 3.9 required? Yes ☐ No ☒ Assign Independent Reviewer

CN Incorporated? PM or designee sign and date:_____

EP 3.8.1F October 2003

CHANGE NOTICE CONTINUATION SHEET PAGE 2 OF 2

CN 145579-036-CN-006		
DATE 01-12-06		
DRAWING NO DBVS-SK-P102	SH 1	REV C

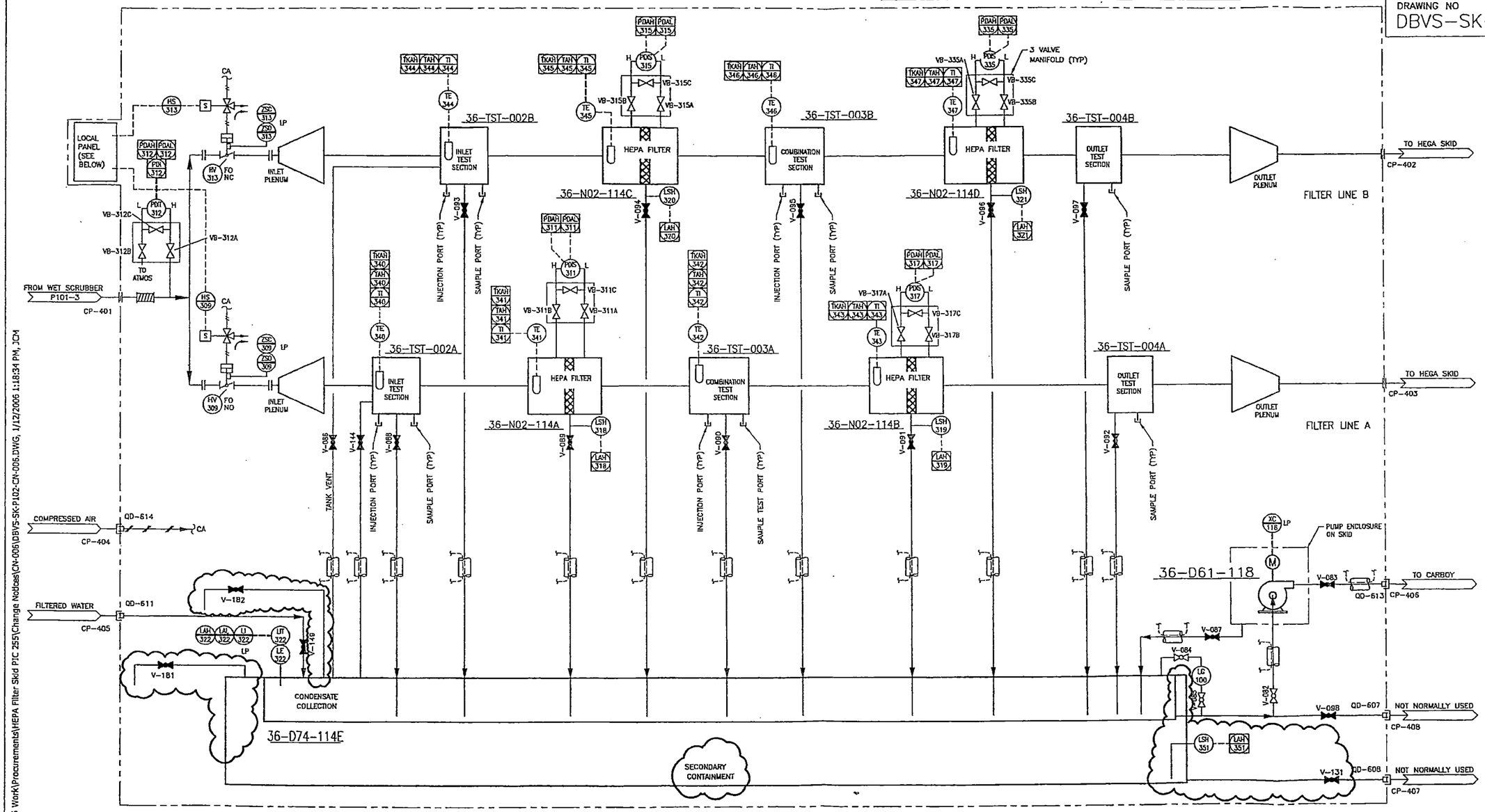

N:\Demonstration Bulk VIT\Fiscal Year 2006 Work\Procurements\HEPA Filter Skid PIC 255\Change Notices\CN-006\DBVS-SK-P102-CN-006.DWG, 1/12/2006 1:18:34 PM, JCH

145579-D-SP-037

DMJM technology

amec

TECHNICAL SPECIFICATION

The document revision number is indicated below. Please replace all revised pages of this document and destroy the superseded copies.

PROJECT:	**Final DBVS Design**	**145579-D-SP-037**	**REV. 1**
PROJECT NO:	**145579**	**WET SCRUBBER SKID ASSEMBLY DESIGN AND FABRICATION**	
CLIENT:	**AMEC E&E - Richland, Washington**		

REV No.	ISSUED FOR	ORIGIN	DATE	INITIAL
0	Approval	J. Irwin	22-Dec-04	JJI
1	Approval	J. Luey	03-Nov-05	JKL

DOCUMENT APPROVAL

CLIENT APPROVAL (AMEC RICHLAND)

Original Approvals On File

Project Manager:

Date: 11/4/05

Q.A. Rep.:

Date: 11/4/05

CLIENT APPROVAL (CH2M HILL)

Project Manager: 11/4/05 11/4/05

Date:

DMJM (RICHLAND)

Original Approvals On File

Project Manager:

Date: 11/4/05

Discipline Lead:

Date: 11/4/2005

Originator:

Date: 11/4/2005

DMJM technology

amec

TECHNICAL SPECIFICATION

PROJECT:	Final DBVS Design	145579-D-SP-037	REV. 1
PROJECT NO.:	145579	WET SCRUBBER SKID ASSEMBLY DESIGN AND FABRICATION	
CLIENT:	AMEC E&E - Richland, Washington		

TABLE OF CONTENTS

Page

1 SCOPE 7
1.1 INCLUDED IN SCOPE 7
1.2 NOT INCLUDED IN SCOPE 9

2 APPLICABLE DOCUMENTS 10
2.1 GOVERNMENT DOCUMENTS 10
2.2 NON-GOVERNMENT DOCUMENTS 10

3 TECHNICAL REQUIREMENTS 17
3.1 ITEM DEFINITION 17
3.1.1 Item Diagram 17
3.1.2 Interface Definition 18
3.2 CHARACTERISTICS 24
3.2.1 Functional Characteristics 24
3.2.2 Physical Characteristics 27
3.2.3 Reliability 27
3.2.4 Maintainability 28
3.2.5 Environment 29
3.2.6 Transportability and Storage 30
3.2.7 Safety 31
3.3 DESIGN AND CONSTRUCTION 31
3.3.1 Parts/Materials/Processes 31
3.3.2 Industry and Government Standards 58
3.3.3 Radiation 59
3.3.4 Cleanliness 60
3.3.5 Corrosion of Parts 61
3.3.6 Protective Coatings 61
3.3.7 Interchangeability 63
3.3.8 Identification and Marking 63
3.3.9 Nameplates 67
3.3.10 Human Engineering 67
3.3.11 Design and Qualification 67
3.3.12 Document Submittal 73
3.3.13 Personnel and Training 77

4 QUALITY ASSURANCE REQUIREMENTS 79
4.1 GENERAL 79
4.1.1 Design 79
4.1.2 Procurement Document Control 79
4.1.3 Instructions, Procedures, and Drawings 81
4.1.4 Identification and Control of Items 82

4.1.5 Control of Processes 82
4.1.6 Verification and Verification Methods 83
4.1.7 Test Control 84
4.1.8 Control of Measuring and Test Equipment 85
4.1.9 Handling, Storage, and Shipping 86
4.1.10 Inspection, Test, and Operating Status 86
4.1.11 Control of Nonconforming Items 86
4.1.12 Corrective Action 87
4.1.13 Quality Assurance Records 88
4.1.14 Control of Graded Fasteners 88
INSPECTIONS AND TESTS 88
4.2 88
4.2.1 Electrical Testing 89
4.2.2 Remote Operated Valve Tests 90
4.2.3 Pressure Leak Test 91
4.2.4 Wet Scrubber System Testing 91
4.2.5 Secondary Containment Leak Test 92
4.2.6 Lift Tests 93

5 PRESERVATION AND DELIVERY 94
5.1 GENERAL 94
5.1.1 Packaging and Shipping Instruction Manual 94
5.1.2 Operation and Maintenance Manual 94
5.2 PRESERVATION AND PACKAGING 95
5.3 PACKING 95
5.4 MARKING 98
5.5 HANDLING 98
5.6 SHIPPING 98
5.7 RECEIVING 98

6 NOTES 100

7 APPENDICES 101

APPENDICES

A Drawings and Sketches
B ASME AG-1 Compliance Requirements
C Example Data Sheets
D TFC-ESHQ-Q_C-C-03, Revision C-2, *Control of Suspect/Counterfeit Items*
E Request for Information
F Bidder's Drawing and Data Commitments
G Instrumentation Naming and Tagging Convention

FIGURE

Figure 3-1: Interface Panel Wiring to Instrument/Component Drawing (Example) 55

TABLES

Table 2-1: Government Documents 10
Table 2-2: Non-Government Documents 10
Table 3-1: Wet Scrubber Skid Assembly Interface Connections (2 sheets) 19
Table 3-2: Incoming Stream Properties 25
Table 3-3: Environmental Conditions 30
Table 3-4: Wire Color Coding Requirements 48
Table 3-5: Standard Drawing Dimension Tolerances 58
Table 3-6: Pipe Labeling Format 65
Table 3-7: Wet Scrubber Skid Assembly Piping Design Conditions 72

ABBREVIATIONS AND ACRONYMS

AISC	American Institute for Steel Construction
ANSI	American National Standards Institute, Inc.
ASCE	American Society of Civil Engineers
ASHRAE	American Society of Heating, Refrigerating, and Air Conditioning Engineers
ASME	American Society of Mechanical Engineers
ASNT	American Society of Nondestructive Testing
ASTM	American Society for Testing and Materials
AWG	American wire gauge
AWS	American Welding Society
B&PV	Boiler and Pressure Vessel
CFR	*Code of Federal Regulations*
CH2M HILL	CH2M HILL Hanford Group, Inc.
CMTR	Certified Material Test Reports
CoC	Certificate of Conformance
CWI	Certified Welding Inspector
DBVS	Demonstration Bulk Vitrification System
DOE	U.S. Department of Energy
EIN	Equipment Identification Number
FAT	Factory Acceptance Test
HEPA	high-efficiency particulate air
IEEE	Institute of Electrical and Electronics Engineers
MCS	Monitoring and Control System
NCR	nonconformance report
NDE	nondestructive examination
NEC®	*National Electric Code*
NEMA	National Electrical Manufacturers Association
NFPA	National Fire Protection Association
NIST	National Institute of Standards and Technology
NRTL	Nationally Recognized Testing Laboratory

OGTS	Off-Gas Treatment System
P&ID	piping and instrumentation diagram
QA	quality assurance
QD	quick disconnect
RGS	rigid galvanized steel
RTD	resistance temperature detector
SAE	Society of Automotive Engineers
UBC	Uniform Building Code
UL	Underwriters Laboratories, Inc.
WAC	*Washington Administrative Code*

TRADEMARKS

AutoCAD	Registered trademark of AutoDesk, Inc.
Bray	Registered trademark of BRAY INTERNATIONAL, Inc.
Buna N	Registered trademark of Buna Werke Huls G.m.b.h.
Electromark	Registered trademark of Permar Systems, Incorporated dba Electromark Company.
Keystone	Trademark of Tyco Industries.
LineBacker	Registered trademark of Professional Services Industries, Inc.
Loctite	Registered trademark of Henkel Loctite.
Mini Power-Zone	Registered trademark of Square D Company Corporation.
NEC	Registered trademark of the National Fire Protection Association.
Neo-Lube	Registered trademark of Watson Bowman ACME Corporation.
Square D	Registered trademark of Square D Company Corporation.
Sta-kon	Registered trademark of Thomas & Betts Corporation.
Super Therm	Registered trademark of Superior Products International II Incorporated dba Superior Products Corporation.
Swagelok	Registered trademark of Swagelok Company.
Teflon	Registered trademark of E.I. Du Pont De Nemours and Company.
Viton	Registered trademark of DuPont DOW Elastomers.
Weidmüller	Registered trademark of C. A. Weidmüller K.G. Company,

1 SCOPE

Throughout this specification, Contract Responder shall act as the Seller and AMEC Earth and Environmental, Inc. shall act as the Buyer.

The Demonstration Bulk Vitrification System (DBVS) will demonstrate a treatment process for radioactive waste located on the Hanford Site in Richland, Washington. This specification is for a wet scrubber skid assembly. Deviations from the treatment equipment are allowed, as long as all other requirements in the specification are met, but will require justification by the Seller with Buyer approval, contingent on discussions with the owners.

Unless otherwise stated, alternative equipment designs are permissible, if proven to be effective in meeting the requirements in this specification. Any alternative design must be thoroughly explained with text supplemented by drawings or sketches and proposed with the original bid. Buyer approval is required before proceeding with an alternative equipment design.

A Turn-Key Packaged System is preferred which would include all equipment and controls to meet the performance requirements listed in this specification. To allow for both a designed system and a packaged system, certain items will indicate an option within the body of this specification.

1.1 INCLUDED IN SCOPE

Conceptual piping and instrumentation diagram (P&ID) and electrical one-line diagrams (Appendix A) for the Off-Gas Treatment System (OGTS) wet scrubber skid assembly are provided to the Seller to illustrate design considerations currently identified by the Buyer. This specification provides the minimum requirements for design, analysis, fabrication, inspection, testing, documentation, packaging, and shipping of a wet scrubber skid assembly. The following lists equipment and design activities to be provided by the Seller:

1. A skid with leak catch pans, and piping and electrical connections. The skid will be installed on a concrete pad. The Seller is responsible for providing anchor points.

2. Venturi scrubber(s), quencher(s), condenser, mist eliminators, outlet heater, ductwork and enclosures, pressure control valves, and manual isolation valves.

3. Scrubber collection tank subsystem with pumps, flow control valves, manual isolation valves, piping and supports, and process instrumentation.

4. Makeup solution subsystem with caustic storage tank, mixer, centrifugal pump, isolation valves, piping and supports, and process instrumentation.

5. Electrical distribution equipment, including transformer (as required), distribution panel, wiring, conduit, local pushbutton stations, and convenience receptacles.

6. Instrumentation and control wiring from skid-based equipment connected to terminal box(s). For a packaged system, terminations for remote shutdown, alarm and run status signals shall be provided.

7. Support structure for component assembly and skid shipping.

8. Design, fabrication, assembly, inspection, testing, packaging, shipping, and test work plan, including Factory Acceptance Tests (FAT) for systems, subsystems, and components shall be provided (see Sections 4.1 and 4.2). The wet scrubber skid FAT will be performed at the Seller's facility.

9. Develop wet scrubber skid assembly design documentation, supporting calculations, and fabrication drawings; Drawings and sketches provided with this specification represent a minimum set of Buyer expectations for the assembled system. The Seller shall use this information, along with additional material in the specification, to generate a set of design and fabrication drawings with sufficient detail for construction. Examples of information to be developed by the Seller includes, but is not limited to dimensioning and associated tolerances, mounting and weld details, and material types and quantities.

10. Develop complete quality assurance (QA) data package for the design and assembly of one wet scrubber skid assembly.

11. The material handled is considered hazardous and radioactive waste that is regulated under the requirements of 40 CFR 264, Subpart J; 10 CFR 830; and WAC 173-303-640. The design shall take into consideration potential hazards during operation of the system and include in the design measures to prevent the hazardous conditions to operating personnel.

12. Component information provided on data sheets with this specification contain preferences identified by the Buyer for the assembled system. The Seller shall use this information, along with performance requirements either in the specification or generated from Seller prepared calculations, to generate a completed set of data sheets for components of the assembled system. Form, fit, and function shall be evaluated by the Seller in the course of design work and development of the design and fabrication drawings.

13. Any discrepancies noted in this specification or between this specification and other documentation shall be noted and referred to the Buyer for resolution before proceeding with design or fabrication of the item in question.

1.2 NOT INCLUDED IN SCOPE

Work not included in this specification is as follows:

1. Installation of the wet scrubber skid assembly at the Buyer's facilities.

2. Design and manufacture of connected ductwork or piping systems (external to the skid assembly) that are a part of the overall OGTS.

3. Design or manufacture of the electrical conductors on the line side of the 480V power terminal box.

4. No electric motor starters are required. The Buyer will provide starters located in a motor control center that is external to the wet scrubber skid assembly.

5. Chiller unit for the wet scrubber skid condenser. The Seller shall interface with Buyer-provided chiller unit.

6. Monitoring and Control System (MCS) is not included, however, if the proposed system is a packaged unit, it shall include all monitoring and control equipment.

7. Seller to provide option to support unit installation and testing at the Buyer facility. Option shall provide per diem rates for field support.

2 APPLICABLE DOCUMENTS

The codes, standards, and other documents listed in Table 2-1 and Table 2-2 are of the latest issue and addenda in effect at the time of procurement (unless otherwise specified). These documents form a part of the basis of design for this procurement to the extent specified in the applicable sections of this specification. All conflicts between documents referenced herein and the requirements of this specification, recommendations of alternative standards, or identification of omissions shall be brought to the attention of the Buyer for resolution.

2.1 GOVERNMENT DOCUMENTS

Table 2-1: Government Documents

Government Documents	Title
10 CFR 830	"Nuclear Safety Management," *Code of Federal Regulations*, as amended.
29 CFR 1910	"Occupational Safety and Health Standards," *Code of Federal Regulations*, as amended.
40 CFR 264	"Standards for Owners and Operators of Hazardous Waste Treatment, Storage, and Disposal Facilities," Subpart J, *Code of Federal Regulations*, as amended.
47 CFR 15	"Radio Frequency Devices," *Code of Federal Regulations*, as amended.
DOE/RL-92-36	*Hanford Site Hoisting and Rigging Manual*, U.S. Department of Energy, Richland, Washington.
WAC 173-303-640	"Tank Systems," *Washington Administrative Code*, as amended.

2.2 NON-GOVERNMENT DOCUMENTS

Table 2-2: Non-Government Documents (7 sheets)

Code/Standard	Title
AISC	*Manual of Steel Construction—Allowable Stress Design*, Ninth Edition, American Institute of Steel Construction, Chicago, Illinois.
AISC	*Manual of Steel Construction—Load and Resistance Factor Design*, Third Edition, American Institute of Steel Construction, Chicago, Illinois.

Table 2-2: Non-Government Documents (7 sheets)

Code/Standard	Title
ANSI/AWS D1.3	*Structural Welding Code—Sheet Steel,* American Welding Society, Miami, Florida.
ANSI C63.16	*American National Standard Guide for Electrostatic Discharge Test Methodologies and Criteria for Electronic Equipment,* American National Standards Institute, Washington, D.C.
ANSI/HI 3.1-3.5	*American National Standard for Rotary Pumps for Nomenclature, Definitions, Applications and Operation,* Hydraulic Institute, Parsippany, New Jersey.
ANSI/HI 3.6	*American National Standard for Rotary Pump Tests,* Hydraulic Institute, Parsippany, New Jersey.
ANSI/HI 5.1-5.6	*Sealless Centrifugal Pumps For Nomenclature, Definitions, Application, Operation and Test,* Hydraulic Institute, Parsippany, New Jersey.
ANSI Y14.1	*Drawing Sheet Size and Format*, American National Standards Institute, Inc., New York, New York.
ANSI Y14.5M	*Dimensioning and Tolerancing*, American National Standards Institute, New York, New York.
ASCE 4-98	*Seismic Analysis of Safety-Related Nuclear Structures*, American Society of Civil Engineers, Reston, Virginia.
ASCE 7-98	*Minimum Design Loads for Buildings and Other Structures*, American Society of Civil Engineers, Reston, Virginia.
ASHRAE Fundamentals Handbook	*2001 ASHRAE Handbook -- Fundamentals*, American Society of Heating, Refrigerating, and Air Conditioning Engineers, Atlanta, Georgia.
ASME AG-1	*Code on Nuclear Air and Gas Treatment*, American Society of Mechanical Engineers, New York, New York.
ASME B&PV Code	*ASME Boiler and Pressure Vessel Code*, American Society of Mechanical Engineers, New York, New York. Section VIII, "Rules for Construction of Pressure Vessels" Section IX, "Welding and Brazing Qualifications"
ASME B16.5	*Pipe Flanges and Flanged Fittings*, American Society of Mechanical Engineers, New York, New York.
ASME B16.9	*Factory-Made Wrought Steel Buttwelding Fittings*, American Society of Mechanical Engineers, New York, New York.

Table 2-2: Non-Government Documents (7 sheets)

Code/Standard	Title
ASME B16.11	*Forged Fittings, Socket Welding and Threaded*, American Society of Mechanical Engineers, New York, New York.
ASME B16.34	*Valves – Flanged, Threaded and Welding End*, American Society of Mechanical Engineers, New York, New York.
ASME B18.2.1	*Square and Hex Bolts and Screws Inch Series*, American Society of Mechanical Engineers, New York, New York.
ASME B18.2.2	*Square and Hex Nuts*, American Society of Mechanical Engineers, New York, New York.
ASME B30.20	*Below-the-Hook Lifting Devices*, American Society of Mechanical Engineers, New York, New York.
ASME B31.1	*Power Piping*, American Society of Mechanical Engineers, New York, New York.
ASME B31.3	*Process Piping*, American Society of Mechanical Engineers, New York, New York.
ASME N509	*Nuclear Power Plant Air-Cleaning Units and Components*, American Society of Mechanical Engineers, New York, New York.
ASME NQA-1, 1997*	*Quality Assurance Program Requirements for Nuclear Facilities*, American Society of Mechanical Engineers, New York, New York.
ASME PCC-1	*Guidelines for Pressure Boundary Bolted Flange Joint Assembly*, American Society of Mechanical Engineers, New York, New York.
ASNT SNT-TC-1A	*Recommended Practice*, American Society of Nondestructive Testing, Columbus, Ohio.
ASTM A 36/A 36M	*Standard Specification for Carbon Structural Steel*, American Society of Testing and Materials, New York, New York.
ASTM A 53/A 53M	*Standard Specification for Pipe, Steel, Black and Hot-Dipped, Zinc-Coated, Welded and Seamless*, American Society of Testing and Materials, New York, New York.
ASTM A 105/A 105M	*Standard Specification for Carbon Steel Forgings for Piping Applications*, American Society for Testing and Materials, West Conshohocken, Pennsylvania.
ASTM A 106	*Standard Specification for Seamless Carbon Steel Pipe for High-Temperature Service*, American Society for Testing and Materials, West Conshohocken, Pennsylvania.

Table 2-2: Non-Government Documents (7 sheets)

Code/Standard	Title
ASTM A 108	*Standard Specification for Steel Bars, Carbon, Cold-Finished, Standard Quality*, American Society for Testing and Materials, West Conshohocken, Pennsylvania.
ASTM A 182/A 182M	*Standard Specification for Forged or Rolled Alloy-Steel Pipe Flanges, Forged Fittings, and Valves and Parts for High-Temperature Service*, American Society for Testing and Materials, West Conshohocken, Pennsylvania.
ASTM A 193/A 193M	*Standard Specification for Alloy-Steel and Stainless Steel Bolting Materials for High-Temperature Service*, American Society for Testing and Materials, West Conshohocken, Pennsylvania.
ASTM A 194/A 194M	*Standard Specification for Carbon and Alloy Steel Nuts for Bolts for High Pressure and High Temperature Service, or Both*, American Society for Testing and Materials, West Conshohocken, Pennsylvania.
ASTM A 234/A 234M	*Standard Specification for Piping Fittings of Wrought Carbon Steel and Alloy Steel for Moderate and High Temperature Service*, American Society for Testing and Materials, West Conshohocken, Pennsylvania.
ASTM A 240/A 240M	*Standard Specification for Chromium and Chromium-Nickel Stainless Steel Plate, Sheet, and Strip for Pressure Vessels and for General Applications*, American Society for Testing and Materials, West Conshohocken, Pennsylvania.
ASTM A 269	*Standard Specification for Seamless and Welded Austenitic Stainless Steel Tubing for General Service*, American Society of Testing and Materials, New York, New York.
ASTM A 276	*Standard Specification for Stainless Steel Bars and Shapes*, American Society of Testing and Materials, New York, New York.
ASTM A 307	*Standard Specification for Carbon Steel Bolts and Studs, 60 000 PSI Tensile Strength*, American Society for Testing and Materials, West Conshohocken, Pennsylvania.
ASTM A 312/A 312M	*Standard Specification for Seamless and Welded Austenitic Stainless Steel Pipes*, American Society for Testing and Materials, West Conshohocken, Pennsylvania.

Table 2-2: Non-Government Documents (7 sheets)

Code/Standard	Title
ASTM A 325	*Standard Specification for Structural Bolts, Steel, Heat Treated, 120/105 ksi Minimum Tensile Strength*, American Society for Testing and Materials, West Conshohocken, Pennsylvania.
ASTM A 351	*Standard Specification for Castings, Austenitic, for Pressure-Containing Parts*, American Society for Testing and Materials, West Conshohocken, Pennsylvania.
ASTM A 354	*Standard Specification for Quenched and Tempered Alloy Steel Bolts, Studs, and other Externally Threaded Fasteners*, American Society for Testing and Materials, West Conshohocken, Pennsylvania.
ASTM A 403/A 403M	*Standard Specification for Wrought Austenitic Stainless Steel Piping Fittings*, American Society for Testing and Materials, West Conshohocken, Pennsylvania.
ASTM A 480/A 480M	*Standard Specification for* General Requirements for Flat-Rolled Stainless and Heat-Resisting Steel Plate, Sheet, and Strip, American Society for Testing and Materials, West Conshohocken, Pennsylvania.
ASTM A 500	*Standard Specification for Cold-Formed Welded and Seamless Carbon Steel Structural Tubing in Rounds and Shapes*, American Society for Testing and Materials, West Conshohocken, Pennsylvania.
ASTM A 563a	*Standard Specification for Carbon and Alloy Steel Nuts*, American Society for Testing and Materials, West Conshohocken, Pennsylvania.
ASTM A 569	*Standard Specification for Steel, Carbon (0.15 Maximum, Percent), Hot-Rolled Sheet and Strip Commercial*, American Society for Testing and Materials, West Conshohocken, Pennsylvania.
ASTM F 436	*Standard Specification for Hardened Steel Washers*, American Society for Testing and Materials, West Conshohocken, Pennsylvania.
AWS D1.1/D1.1M	*Structural Welding Code—Steel*, American Welding Society, Miami, Florida.
AWS D1.6	*Structural Welding Code—Stainless Steel*, American Welding Society, Miami, Florida.
AWS D9.1/D9.1M	*Sheet Metal Welding Code*, American Welding Society, Miami, Florida.
AWS QC-1	*Standard for AWS Certification of Welding Inspectors*, American Welding Society, Miami, Florida.

Table 2-2: Non-Government Documents (7 sheets)

Code/Standard	Title
HNF-2962	*A List of EMI/EMC Requirements*, Rev. 0, Numatec Hanford Corporation for Fluor Daniel Hanford, Inc., Richland, Washington.
HNF-SD-GN-ER-501	*Natural Phenomena Hazards, Hanford Site, Washington*, Revision 1B, Westinghouse Hanford Company, Richland, Washington.
IEEE C62.41.1	*IEEE Guide on the Surge Environment in Low-Voltage (1000 V and Less) AC Power Circuits*, Institute of Electrical and Electronics Engineers, New York, New York.
IEEE C62.41.2	*IEEE Recommended Practice on Characterization of Surges in Low Voltage (1000 V and Less) AC Power Circuits*, Institute of Electrical and Electronics Engineers, New York, New York.
IEEE Std C37.90.2	*IEEE Standard for Withstand Capability of Relay Systems to Radiated Electromagnetic Interference from Transceivers*, Institute of Electrical and Electronics Engineers, New York, New York.
IEEE Std 141	*IEEE Recommended Practice for Electric Power Distribution for Industrial Plants*, Institute of Electrical and Electronics Engineers, New York, New York.
IEEE Std 142	*IEEE Recommended Practice for Grounding of Industrial and Commercial Power Systems*, Institute of Electrical and Electronics Engineers, New York, New York.
IEEE Std 242	*IEEE Recommended Practice for Protection and Coordination of Industrial and Commercial Power Systems*, Institute of Electrical and Electronics Engineers, New York, New York.
IEEE Std 519	*Recommended Practices and Requirements for Harmonic Control in Electrical Power Systems*, Institute of Electrical and Electronics Engineers, New York, New York.
MSS SP-67	*Butterfly Valves*, Manufacturing Standardization Society of the Valve and Fittings Industry, Inc., Vienna, Virginia.
MSS SP-72	*Ball Valves with Flanged or Butt-Welding Ends for General Service*, Manufacturing Standardization Society of the Valve and Fittings Industry, Inc., Vienna, Virginia.
MSS SP-82	*Valve Pressure Testing Methods*, Manufacturing Standardization Society of the Valve and Fittings Industry, Inc., Vienna, Virginia.

Table 2-2: Non-Government Documents (7 sheets)

Code/Standard	Title
NEMA MG-1	*Motors and Generators*, National Electrical Manufacturers Association, Rosslyn, Virginia.
NFPA 70	*National Electrical Code*, 2002 Edition, National Fire Protection Association, Quincy, Massachusetts.
SAE J429	*Mechanical and Material Requirements for Externally Threaded Fasteners*, Society of Automotive Engineers, Warrendale, Pennsylvania.
UBC, 1997	*1997 Uniform Building Code*, International Conference of Building Officials, Whittier, California.
UL 508A	*Standard for Industrial Control Panels*, Underwriters Laboratories, Inc., Northbrook, Illinois.
*NQA-1 (the relevant requirements of NQA-1 are included in Section 4).	

3 TECHNICAL REQUIREMENTS

3.1 ITEM DEFINITION

The wet scrubber skid assembly consists of: (1) ductwork and enclosures for quencher(s), venturi scrubber(s), mist eliminators, condenser, outlet heater, and collection tanks; (2) a chilled water piping system containing heat exchangers, piping, and valves; (3) process instrumentation and termination panels; (4) electrical power components; (5) a caustic makeup system; and, (6) a support structure skid onto which the ductwork and piping system will be mounted and secured. Functionally, the wet scrubber skid assembly will receive a partially conditioned radioactive-contaminated air stream from a set of sintered metal filters (particulate removed), treat the air stream (remove particulate, remove acid gases, and cool the air stream), then route the scrubbed air stream to a high-efficiency particulate air (HEPA) filter skid assembly with containment pan. The skid assembly contains instruments to monitor the flow, pressure, and temperature of the air stream and the operating characteristics of the scrubber support systems.

3.1.1 Item Diagram

The wet scrubber skid assembly shall be designed to comply with Drawings F-45579-00-A-0099, F-145579-00-A-0100, F-145579-36-A-0100, F-145579-36-A-0102, and H-14-106796, and Sketch DBVS-SK-E104 provided in Appendix A for information.

Major components of the wet scrubber skid assembly include:

1. Air quencher(s);
2. Venturi scrubber(s);
3. Condenser;
4. Mist eliminator(s);
5. Interconnecting ductwork with valve(s) and ductwork supports;
6. Caustic circulation piping system with pump(s), valves, and heat exchanger(s);

7. Chilled water system piping, valves and heat exchanger(s);

8. Compressed air system piping;

9. Caustic addition tank with mixer and pump;

10. Electric heater at system outlet;

11. OGTS interfacing piping;

12. Process instrumentation; and

13. Electrical power distribution equipment.

3.1.2 Interface Definition

The wet scrubber skid assembly will interface with an incoming contaminated air stream, a downstream HEPA Filter System, a Chilled Water System, a Secondary Waste Storage System, electrical supply, a Monitoring and Control System, a Filtered Water System, and a Compressed Air System. System interface requirements for the wet scrubber skid assembly are shown on Sketches DBVS-SK-E104 and DBVS-SK-M103 and Drawings F-145579-36-A-0100, F-145579-36-A-0102, and H-14-106796 (Appendix A), and the interfacing process and electrical connections noted in Table 3-1.

The relative location for connection points discussed in Table 3-1 shall be as follows:

1. Inlet from Sintered Metal Filters – east side;

2. Outlet to HEPA Filter System – west side;

3. Chilled Water supply and return – east side;

4. Secondary containment drain – north side;

5. Secondary waste bleed to Buyer tanks – north side;

6. Filtered water and caustic supply from Buyer – north side;

7. Compressed air supply – north side;

8. Make-up air – east side;

9. Main electrical distribution terminal box – south side;

10. Push Button station – north side; and

11. Monitoring and Control termination panel – south side.

Specific interface locations on the skid shall be shown on conceptual sketches reviewed by the Buyer. Critical interface information, such as elevation and location relative to the skid, shall be shown so that the Buyer can reconcile Wet Scrubber Skid interfaces with other equipment located on the Buyer's site.

Table 3-1: Wet Scrubber Skid Assembly Interface Connections (2 sheets)

Connection Point (DBVS-SCBR-)	Description	Connection[a]
CP-101	Manifold inlet from the sintered metal filters	• Ductwork Termination: 16-in. 150-lb RF flange, ASTM A 105/A 105M[b].
CP-102	Chilled water supply	• Piping Termination: 3-in. 150-lb RF flange, ASTM A 105/A 105M[b].
CP-103	Compressed air supply	• Piping Termination: 1/2-in. threaded coupling, ASTM A 105/A 105M[b], Grade C with quick disconnect.
CP-104	Scrubber tank secondary containment drains	• Piping Termination: 1-1/2-in. threaded coupling, ASTM A 105/A 105M[b], Grade C with quick disconnect.
CP-106	Secondary waste bleed to Buyer tanks	• Inner Pipe Connection: 2-in. CJ Stud, River Bend Hose Specialty, Part No. JBW6-8, 316L stainless. • Encasement Flange Termination: 6-in. Class 150 RF, ASTM A 105/A 105M[b].
CP-107	Chilled water return	• Piping Termination: 3-in. 150-lb RF flange, ASTM A 105/A 105M[b].

Table 3-1: Wet Scrubber Skid Assembly Interface Connections (2 sheets)

Connection Point (DBVS-SCBR-)	Description	Connection[a]
CP-108	Manifold outlet to the High-Efficiency Particulate Filter System	• Ductwork Termination: 16-in. 150-lb RF flange, ASTM A 105/ A 105M[b].Piping Termination: 1-in. threaded coupling, ASTM A 105/A 105M[b], Grade C with quick disconnect.
CP-109	Caustic supply from Buyer tank	• Piping Termination: 1-in. 150-lb RF flange, ASTM A 105/A 105M[b].
CP-110	Filtered water supply	• 1-in. threaded coupling, ASTM A 105/A 105M[b], Grade C with quick disconnect.
CP-111	Make-up air	• Piping Termination: 8-in. 150-lb RF flange, ASTM A 105/A 105M[b].
N/A	Main electrical distribution connection	• Terminal box (480V ac).
N/A	Motor circuit and heater connections	• Terminal box (480V ac).
N/A	Pushbutton stations	• Terminal box (120V ac).
N/A	Main electrical ground connection	• Grounding Lug
N/A	Main Monitoring and Control System connection	• Generic termination panel.

NA = not applicable. RF = raised-face.

[a]All piping connectors shall have a suitable blank cover installed during storage or shipment of the skid assembly.

[b]ASTM A 105/A 105M, *Standard Specification for Carbon Steel Forgings for Piping Applications*, American Society for Testing and Materials, West Conshohocken, Pennsylvania.

3.1.2.1 Process Conditions

The process air stream entering the wet scrubber skid assembly originates from the OGTS sintered metal filters. The air stream process parameters are described in Section 3.2.1.1.

3.1.2.2 Process Connection Interface

The piping and ducting connections at the wet scrubber skid assembly are noted in Table 3-1. These ducting connections constitute the primary interface between the interfacing systems and the wet scrubber skid assembly. The main inlet and outlet connections shall be a 16-in. standard 150-lb raised-face flanged connection. A connection for make-up air shall be provided that consists of an 8-in. standard 150-lb raised-face flanged.

3.1.2.3 Scrubber Bleed Storage Tank Interface

The connection piping to the Buyer's waste storage tanks will be provided by the Buyer.

3.1.2.4 Chilled Water Connection Interface

The connection piping to the Buyer's chilled water supply and return will be provided by the Buyer. Three-inch standard 150-lb raised-face flanged connections shall be provided on these lines.

3.1.2.5 Scrubber Tank Secondary Containment Drain Interface

Removable scrubber tank secondary containment drain valve and quick disconnect (QD) shall be provided by the Seller. The drain valve and QD shall be removed for shipment.

3.1.2.6 Filtered Water Interface

Filtered water will be provided to the skid assembly at a maximum of 5 gal/min and 100 psig at the filtered water inlet penetration.

3.1.2.7 Compressed Air Interface

Compressed air (filtered and dried) will be provided to the skid assembly at a maximum of 5ft^3/min, and 100 psig, at the Compressed Air System inlet penetration.

3.1.2.8 Electrical Connection Interface

A one-line diagram of the electrical connections is shown on Sketch DBVS-SK-E104 (Appendix A). The following subsections describe the connections in more detail.

3.1.2.8.1 480V Power Connection

The wet scrubber skid assembly shall receive five sources of 480V ac power from an external source. One single-phase, 480V ac circuit shall be provided for a transformer and distribution panel. Three-phase, 3-wire, 480V ac circuits shall be provided for the remaining loads.

All 480V ac circuits shall terminate in a terminal box on the skid., All terminals in terminal boxes shall be rated for 194 °F (90 °C). 25 percent spare terminals shall be provided in all terminal boxes.

Power described above shall be routed from the terminal box to disconnect switches for the loads.

3.1.2.8.2 Grounding Connection

A grounding lug, suitable for #4/0 bare copper, shall be provided on the outside frame of the skid to facilitate attachment of the skid grounding electrode. The location of the grounding lug shall be shown on the shop drawings. See Section 3.3.1.9.3 and Sketch DBVS-SK-E104 for grounding requirements.

3.1.2.8.3 Monitoring and Control System Connection

Monitoring and Control System functions that are automatic or remote will be provided by the Buyer via the instrumentation interface described below. The local monitoring and control functions for the wet scrubber skid assembly shall be identified by the Seller for off-the-shelf components. The general control and operation philosophy for the unit, in order to be compatible with practices at the Buyer's Site, include the following:

1. Operation of valves is performed in such a way as to not expose an operator to a hazard. Acceptable methods include remote actuated valves (operated from a local control station or through the Buyer's MCS) or reach rods through a physical barrier between the process system and operator.

2. Operation of pumps to drain and fill the scrub solution tanks will be performed using local push button stations or via the MCS, requires continuous auto-bleed top-off from the MCS. The station shall be located so that the operator can terminate the action upon detection of a leak.

3. Critical operating parameters shall be identified by the Seller. These parameters shall be displayed locally at the enclosure to allow for an assessment of operating conditions during operator rounds. These parameters shall also be accessible by the Buyer's MCS.

The Seller shall interface with the physical instruments and components through the use of a Seller-provided termination panel mounted on the skid. This panel shall be rated NEMA 4x and the external top coat shall be Super Therm® coating; color shall be white, provided by G.E.M.S., Inc., Collins, Georgia. This surface will reduce the affects on direct sunlight thermal effects.

For a packaged system, terminations for remote shutdown, alarm, and run status may be on the skid.

Each wet scrubber skid MCS connection shall be capable of operating the contained process and utility equipment from either a 24V dc (preferable) or 120V ac termination (note that the Buyer has determined that solenoid valves shall be 24V dc for all systems). The MCS interfaces are identified as instruments or components shown on the system P&ID (Appendix A). The termination panel shall have a 20 percent spare capacity. For a packaged system, these requirements are not applicable. Interfacing with the external MCS shall be by dry contacts, rated at 120V ac, 5 amps for a remote shutdown, run, and alarm status.

See Section 3.3.1.15 for MCS termination details.

3.1.2.9 Skid Assembly Transport and Installation Interface

The wet scrubber skid assembly shall be configured for conventional transport by truck over public roads and lifted by crane for installation at the Buyer's designated location. The skid assembly shall be secured during transport and lift points provided for loading and unloading the assembly. The skid shall have a minimum of four anchor points designed for 1/2-in. or larger anchor bolts installed

in the concrete pad. Anchor points shall be shown on drawings with size and number clearly labeled.

3.2 CHARACTERISTICS

The characteristics (e.g., functional, physical, and environmental) that the wet scrubber skid assembly must comply with to satisfy the requirements of this specification are described below and on the datasheet.

3.2.1 Functional Characteristics

The wet scrubber skid assembly shall be designed to receive off-gas from the vitrification process, process the contaminated air stream (remove particulate and acid gases, and cool the air stream), and transfer the processed air to a HEPA Filtering System.

3.2.1.1 Air Stream Properties

The air stream properties entering the wet scrubber skid assembly are shown in Table 3-2.

Table 3-2: Incoming Stream Properties

Properties	Data
Design Air Flow Rate @ CP-101	3,115 acfm (12,375 lb/hr)
Estimated Temperature[a] @ CP-101	134 °F (57°C)
Estimated Pressure[a] @ CP-101	–13.6 in. w.g.
Relative Humidity @CP-101	100%
Chemical Components @ CP-101	SOx[b] = 72 ppmV = 159 ppmM NO_x[c] = 6,930 ppmV = 7,455 ppmM HCl = 7 ppmV = 8.75 ppmM HF = 170 ppbV = 117 ppbM CO = 806 ppmV = 780 ppmM CO_2 = 1,880 ppmV = 2,863 ppmM
Design Air Flow Rate @ CP-111	198 acfm (874 Lb/hr)
Estimated Temperature[a] @CP-111	77 °F (25 °C)
Estimated Pressure[a] @CP-111	-80.1 in. w.g.
Relative Humidity @CP-111	100%

ppmV = parts per million by volume.
ppbM = parts per billion by mass.
w.g. = water gauge.

[a] The Seller shall verify design conditions based on performance criteria of selected equipment.
[b] The concentration of SOx shall be assumed to be 100% SO_2.
[c] The concentration of NOx shall be assumed to be 10% NO_2 and 90% NO.

Note: The values represent normal operating conditions. During abnormal operating conditions the air flow rate may be as low as 862 acfm while the temperature could be as high as 572 °F.

3.2.1.2 Performance Range

Characteristics and requirements for the wet scrubber skid assembly shall be as specified below. Factory Acceptance Testing of the equipment is required. Factory Acceptance Test specifications, procedures, and documentation of test results shall be prepared and submitted. All temporary electrical equipment including wiring and instruments necessary to allow component testing will be provided by the Seller.

3.2.1.2.1 Air Stream Transfer Rate and Pressure

Flow through the wet scrubber skid assembly will be provided by the Buyer's exhaust fan located down stream of the assembly. This fan will provide a static pressure at the discharge of -90 in. w.g. and an estimated flow of 4,700 acfm.

The Seller shall target a maximum pressure drop through the system of no more than 60 in. w.g. Using this discharge pressure and the characteristics of the selected equipment, the Seller shall determine the design pressures as described in ASME N509.

3.2.1.2.2 Air Stream Discharge Conditions

A condenser and mist eliminator will remove excess moisture from the air stream before delivery to the final stage heater. The discharge temperature shall be based on a minimum 40 °F delta across the final stage heater. The minimum discharge temperature shall be 167 °F (75 °C) and the maximum shall be 200 °F (93 °C). The Seller's calculations shall identify the estimated maximum relative humidity at the heater outlet. The discharge from the heater will go to a downstream HEPA filter skid (HEPA filter skid not in the Seller's scope).

3.2.1.2.3 Scrubber Removal Efficiency Requirements

The following shall be the maximum required chemical compositions removal efficiencies (= 1 – Out/In) resulting from the nominal scrubber operation:

1. SO2 = 97 percent by mass removal,
2. NO = 0 percent by mass removal (Seller to provide incidental estimate),
3. NO2 = 40 percent by mass removal,
4. HCl = 97 percent by mass removal,
5. HF = 97 percent by mass removal,
6. CO = 0 percent by mass removal (Seller to provide incidental estimate),
7. CO2 = 0 percent by mass removal (Seller to provide incidental estimate),
8. Particulate = 99 percent above 1.0 -micron particle size, and
9. Particulate = 0 percent above 0.3-micron but less than 1 micron particle size (Seller to provide incidental estimate).

3.2.1.2.4 Secondary Containment

The secondary containment requirement for the enclosure (or insert) is for the containment to be capable of holding at least the total capacity of the caustic recirculation system inventory. The wet scrubber skid assembly will contain leak detection capability and a pump-out port for removal of any liquid contained in the skid assembly. The sump shall be designed such that 1.5 gal of liquid will provide a pool depth of at least 1 in. Leak detection shall provide dry contacts to the MCS termination panel or be part of a packaged system alarm status signal. A leak catch pan will be included for leak detection.

3.2.2 Physical Characteristics

The system with associated supports, piping, instruments, and electrical infrastructure shall be installed on the skid. Sizing shall be based on the contained processing equipment and on the dimensions allowed for transportation, however the maximum dimensions shall not exceed 10 ft in width and 40 ft in length. The skid will sit on a concrete pad. See Section 3.1.2.9 for anchor point requirements.

3.2.3 Reliability

All wet scrubber skid assembly equipment including, but not limited to, the piping, pumps and motors, casings, shafts, valves, filters, bearings, seals, and fasteners shall have a minimum service life of 2 years and a design life of 5 years. Documentation to demonstrate this requirement is met shall be collected and prepared by the Seller. Documentation shall be submitted to and verified by the Buyer before fabrication. Redundancy of wet scrubber skid assembly active components (e.g., pumps) shall be considered and incorporated into the assembly design as appropriate to minimize the possibility of a single active failure resulting in loss of wet scrubber function.

3.2.4 Maintainability

Maintainability characteristics that affect the design (lubrication, parts replacement and repair, spares, modular construction, test points, etc.), including, but not limited to, shall include the following:

1. Maintenance and Repair Cycles. The Seller shall specify frequency or availability requirements for maintenance of the component (e.g., scheduled maintenance every 40 operating hours).

2. Service and Access. The Seller shall specify requirements for ease of service (access openings/spacing, self-test capability, inspection windows, test fixtures, sealed bearings, etc.). Include requirements for service (remove and replace only, bench repair, special tools, remote handling/maintenance, etc.), and for capability of the item to be drained, connected, discharged, etc. Adequate working space shall be provided around all electrical equipment in accordance with the NEC® (NFPA 70). Critical equipment, instrumentation, or high maintenance items shall be accessible for ease of inspection and removal and replacement. Adequate space and accessibility shall be provided for removal and replacement of individual instruments or equipment without removal of adjacent equipment. Valves, test points or ports, and calibration adjustments shall be accessible.

3. Decontamination. All components in contact with processing fluids must be capable of being decontaminated and ultimately decommissioned, dismantled, and disposed of as radioactive waste. All material and equipment shall be fabricated and installed to facilitate routine removal, cleaning, or decontamination. Attention shall be paid to eliminating crevices and obtaining smooth weldments through the entire process flow stream.

4. Spares and Spare Parts. The Seller shall specify identification of recommended spares and spare parts and provide a listing to the Buyer.

5. Special Tools. The system shall facilitate maintenance with commercially available tools, wherever possible. The Seller shall furnish all special tools unique to the Seller's equipment that are necessary for installation, startup, operation, maintenance, and adjustment of the equipment and accessories furnished by the Seller. The special tools become the property of the Buyer. If supplied, the Seller shall also provide a list of all special tools

furnished, identifying the function of each tool and the specific item(s) for which the tool is used. The Seller shall also indicate if the tool is required for assembly, disassembly, installation, startup, operation, maintenance, or adjustment. The Seller shall provide detailed drawings or procurement information for the special tools.

6. Maintenance Considerations. The design of the assembled system shall follow a minimum maintenance philosophy (i.e., selection of components should take into consideration potential maintenance in addition to other considerations). Components shall be designed to allow handling and maintenance by personnel outfitted in protective clothing and gloves. Components shall also be designed so they can be removed and replaced in a modular manner.

7. Lock and Tag. Both mechanical and electrical systems shall be designed to be locked out and tagged out during maintenance actions. Where applicable, the Seller shall identify on fabrication drawings those components which have a built-in feature that support the application of a lock and tag.

8. Standardization. To the extent practical, common components shall be used to minimize spare parts, tools, and procedures. Fastener sizes, drive size, and type shall also be standardized to effect maintenance with a minimum number of tools.

3.2.5 Environment

The wet scrubber skid assembly shall be designed to operate and be stored in the climatic and environmental conditions listed in Table 3-3.

Table 3-3: Environmental Conditions

Parameter	Environmental Condition
Ambient air temperature range[a]	–25 to 115 °F with a maximum 24-h differential of 52 °F[b]
Relative humidity range[a]	Near 0 to 100%
Maximum precipitation[a]	2.5 in. in a 6-h period
Sand and dust concentrations[a]	1.10×10^{-5} lbm/ft^3 with a size of 150 µm or less
Solar Insulation[a]	900 langleys, distributed over a 12-h period
Heating basis wind factors (for freeze protection)	Derive from ASHRAE Fundamentals Handbook[c] for the Hanford Site

[a]HNF-SD-GN-ER-501, *Natural Phenomena Hazards, Hanford Site, Washington*, Revision 1B, Westinghouse Hanford Company, Richland, Washington.

[b]The system is not expected to operate below 0 °F, only provide freeze protection below 0 °F.

[c]*2001 ASHRAE Handbook– Fundamentals*, American Society of Heating, Refrigerating, and Air Conditioning Engineers, Atlanta, Georgia.

3.2.6 Transportability and Storage

The wet scrubber skid assembly equipment shall have a modular design to facilitate disassembly and relocation to the final destination at the Hanford Site.

1. The wet scrubber skid assembly equipment and components shall be capable of being moved by crane or truck with no modifications.

2. Lift points shall be provided for the lifting and handling of equipment and components. Lift points shall be determined by the Seller in calculations (see Section 3.3.11.1.8).

3. The wet scrubber skid assembly equipment packaging shall support the contained equipment so it can withstand 0.75-gravity (forward), hard-braking stop and a rearward acceleration of 0.25 gravity, as well as shock and vibration loads associated with transportation.

4. The wet scrubber skid assembly and any accessories shall be sized for transport using local roadways and freeways (i.e., less than 12 ft wide, 53 ft

long, and 13.5 ft tall). The height limit may be relaxed based on design requirements, but must not exceed limits allowed for road transportation.

5. The wet scrubber skid assembly shall be stored and operated outside for an extended period of time, five years maximum, and will be exposed to the environmental conditions found at the Hanford Site as identified in Section 3.2.5.

3.2.7 Safety

The equipment shall be designed to maintain the safety of operators and the general public. The Seller shall provide all necessary guards, lockouts, and other safety equipment for safe operation as required under 29 CFR 1910.

3.3 DESIGN AND CONSTRUCTION

3.3.1 Parts/Materials/Processes

It is the Seller's responsibility to develop a complete data sheet for the components identified in the Seller's design drawings. Completed data sheets, as well as vendor information (catalog cut sheets, vendor drawings, etc.) for components shall be developed by the Seller. The Seller shall provide data sheets and catalog cut sheets for all components. The data sheet format shall be in conformance with the Buyer-supplied forms contained in Appendix C (electronic forms can be provided by the Buyer).

Component substitutions may be proposed by the Seller on the fabrication drawings for approval by the Buyer. Substitutions will be considered if a component is no longer available, or the proposed substitution improves the design, reduces cost, or improves the production schedule.

Only new parts and materials shall be used for the assembly. Used, surplus, or reconditioned parts and materials are prohibited.

All components shall be installed in accordance with manufacturer's instructions. If conflicts arise with the specified components or component interfaces (line sizes, fittings, electrical requirements, etc.) during design and fabrication, they shall be brought to the attention of the Buyer for resolution.

No aluminum or "yellow" metals are to be used. No beryllium shall be present. Lead shall not be used unless the lead is fully encapsulated and identified with a permanent tag. Exposed polymer materials shall be constructed of anti-static materials. Polychlorinated biphenyls shall not be used in the design of the assembled system. No asbestos shall be used.

3.3.1.1 Components

3.3.1.1.1 Scrubber Mechanical Components

All equipment and components shall have an Equipment Identification Number (EIN) provided by the Buyer following a P&ID. The air stream handling components are listed below. The configuration is shown on the P&ID. As noted in Section 1, deviations are allowed, but must be approved by the Buyer. Packaged, off-the-shelf, demonstrated treatment units are encouraged as long as the performance, quality, and fabrication requirements of this specification are met.

1. A short diameter spool piece with standard 150-lb raised-face flanges,
2. An isolation valve,
3. Quencher(s),
4. Venturi scrubber(s) with recirculation system,
5. Mist eliminator(s),
6. An outlet header for the scrubber system(s),
7. A chilled water based condenser,
8. A final mist eliminator,
9. An electric air heater,
10. An isolation valve,
11. A short spool piece with standard 150-lb raised-face flanges,

12. Collection tanks, and

13. A single caustic makeup subsystem.

Scrubber system components shall be fabricated and/or assembled and tested to meet the latest requirements of ASME N509 and ASME AG-1 (as indicated in Appendix B) or ASME B&PV Code, Section VIII. The buyer in accordance with AG-1, Sections HA-4530 and SA-4530 shall determine allowable system/component leakage rates. Where conflicts occur, ASME AG-1 or ASME B&PV Code, Section VIII takes precedence.

3.3.1.1.2 Pumps and Motor

The venturi circulation transfer pumps shall be of the sealed canned motor-type rated for continuous duty and constructed with 316 stainless-steel wetted parts. The transfer pump shall be coupling driven by an electric motor (the Seller to confirm horsepower size). Motor voltage shall be 480V, 3 phase, 60 Hz. Total head loss and pump motor size shall be determined by the Seller. The pumps shall meet the requirements of ANSI/HI 3.1-3.5, ANSI/HI 3.6, or ANSI/HI 5.1-5.6, as applicable.

3.3.1.1.3 Isolation Dampers or Valves and Installation

All air stream and waste contacting valves/dampers shall be tested in accordance with AG-1, Section DA, Mandatory Appendix DA-I for zero leakage. Valve leak test reports shall be prepared and submitted to the Buyer for review and approval.

All valves shall be installed per manufacturer's instructions.

The Seller shall review manufacturer's supplied information for unique installation requirements and request written clarification if installation requirements do not match the design.

3.3.1.1.4 Thermal Insulation Material Requirements

The need for thermal insulation of components shall be determined by the Seller based on Seller-generated heat transfer calculations. At a minimum, freeze protection will be determined using the provided environmental conditions,

operating parameters for Seller-provided processing equipment. Insulation, if required, shall meet the following requirements:

1. Installed insulation shall not interfere with the operating, testing, maintenance, and service of any components or systems.

2. Insulation shall be removable and re-installable from components requiring periodic maintenance and inspection.

3. The use of lead or asbestos material is not permitted.

4. Insulation material shall be free of halogenated hydrocarbons.

The insulation jacket shall allow for ease of decontamination. Certificates of Conformance (CoC) shall be provided.

3.3.1.1.5 Pressure Monitoring

The system shall be instrumented with differential pressure transmitters to monitor the condition of the Wet Scrubber System. Signals shall be routed to a termination panel for access by the Buyer-provided MCS.

3.3.1.1.6 Temperature Monitoring

Temperature monitoring system shall consist of 100 ohm platinum resistance temperature detector (RTD) probes. The RTDs shall be installed in thermowells. The RTD signals shall be input to the MCS and shall be indicated on the control panel with digital indicators.

3.3.1.1.7 Liquid Monitoring

The caustic reservoir shall have a level transmitter. The liquid level measurement system shall be an impedance type of instrument with a 4-20-mA signal fed to the MCS termination panel, unless the system proposed is a packaged system. The system will be equipped with a low liquid level and high liquid level (30 and 80 percent of the liquid volume) alarms. For a packaged system, alarm contacts to indicate an off-normal condition shall be provided to a termination panel, which may be inside the enclosure. This contact will supply the MCS with a dry contact rated at 120V ac, 5 amps.

3.3.1.1.8 pH Monitoring

The caustic reservoir shall have a pH monitoring transmitter capable of operation at 5-10 percent caustic solutions. The liquid pH measurement system shall be an impedance type of instrument with a 4-20-mA signal fed to the MCS. For a packaged system, alarm contacts to indicate an off-normal condition shall be provided to a termination panel, which may be inside the enclosure. This contact will supply the MCS with a dry contact rated at 120V ac, 5 amps.

3.3.1.2 Piping – Design

Piping systems for the system and interconnecting piping for the caustic, chilled water, Filtered Water and Compressed Air Systems shall be designed, fabricated, inspected, examined, and tested in accordance with the ASME B31.3 piping code for "Normal Fluid Service." Piping systems include all piping components and supports.

The minimum design pressure for the wet scrubber skid piping and components, including instrumentation shall be determined by the Seller based on selected equipment and operating conditions. The design temperature shall be determined by the Seller based on selected equipment and operating conditions.

3.3.1.3 Piping – Line Routing

The proposed installation layouts shall meet the requirements of the ASME B31.3 piping code for "Normal Fluid Service."

The Seller shall provide detailed fabrication drawings of the required piping, including welding details, for review and approval.

3.3.1.4 Piping – Vents and Drains

High-point vent(s) shall be installed as required for venting air in preparation for testing or operation. Low-point drain(s) shall be installed as required for draining the system before maintenance or lay-up. Eliminate low spots to minimize freestanding liquids in the piping. Gravity draining of the piping system is preferred. The Seller shall provide basis for draining method if other than gravity draining.

3.3.1.5 Piping – Pipe and Equipment Supports

Piping attached to equipment shall be installed with fasteners made finger-tight until alignment is achieved, at which time all fasteners shall be tightened. Tightening torque shall be that which is recommended by the ASME B31.3 piping code for "Normal Fluid Service," or gasket manufacturer recommended torque values for the gasket system used. Flange assembly and bolting shall be performed in accordance with ASME PCC-1. Piping support bolting shall be installed and torqued in accordance with manufacturer's recommendations. Inspection documentation shall be provided as evidence of proper bolt torquing.

Piping and equipment shall be supported by pipe supports attached to the enclosure using strut. The Seller shall develop detailed fabrication drawings of the required piping and equipment supports, including welding details. Location of frames members and supports shall be based on analyses performed by the Seller (see Section 3.3.11.1 for required analyses).

All piping supports shall conform to the ASME B31.3 piping code for "Normal Fluid Service," with additional support at valves, elbows, tees, and equipment as required. Additional supports shall be provided, if necessary, to comply with the requirements stated in the design loads section, Section 3.3.11.2.

Piping supports shall be capable of supporting the piping in all conditions of operation. The supports shall allow free expansion and contraction of the piping and prevent excessive stress resulting from transferred weight being introduced into the piping of connected equipment.

Equipment that could be subjected to water damage shall be raised above the skid to protect components in the event of a piping leak.

The Seller shall level-plumb piping using shims, etc., to support the pipe and to avoid forced piping deflections at support points. The pipe supports may be stainless or painted carbon steel.

The Seller shall provide detailed fabrication drawings of the required piping supports, including welding details, for review and approval.

3.3.1.6 Piping Materials

Piping components shall be listed components in accordance with ASME B31.3 (Table 326.1).

The Seller shall select materials based on acceptable lifetime performance of materials subjected to the chemical and radiation exposures described in this specification. All parts and materials shall be new. No aluminum or "yellow" metals are to be used. No beryllium shall be present. Exposed polymer materials shall be constructed of anti-static materials. No lead shall be used in the design unless it is fully encapsulated and identified with a permanent tag. No equipment shall use or require the use of polychlorinated biphenyls. Material selection shall be identified in the Seller documents to the Buyer.

The Seller shall provide CoCs for review of all materials.

3.3.1.6.1 Screwed Pipe Fittings

Screwed pipe fittings shall be in accordance with ASME B16.11. Screwed fittings are acceptable for instrumentation taps, drains, and vents, and the filter water and Compressed Air Systems; but shall be avoided for main process pipe runs. Close or butt nipples are not permitted. For all male-tapered pipe threads, use polytetrafluoroethylene (TFE) tape, or equivalent. Threaded joints in process lines shall be joined using low-chloride, Loctite® PST.

3.3.1.6.2 Flanged Pipe Fittings

Flanges for pipe greater than 1/2 in. shall be standard 150-lb or 300-lb raised-face flanges in accordance with ASME B16.5 and shall be made from the same type of steel as the pipe in which it will be welded. Flange assembly and bolting shall be performed in accordance with ASME PCC-1.

3.3.1.6.3 Socket Welded Pipe Fittings

Socket welded pipe fittings shall be in accordance with ASME B16.11. Socket welds shall be avoided for main pipe runs.

3.3.1.6.4 Butt-Welded Fittings

Butt-welded fittings shall be in accordance with ASME B16.9.

3.3.1.6.5 Stainless-Steel Pipe Materials

Stainless-steel pipe shall be ASTM A 312/A 312M, Schedule 40 or 80 (as required), seamless, 300-series, Type 304, 304L, 316, or 316L. Stainless-steel pipe flanges and flanged, socket weld, or screwed fittings shall be ASTM A 182/A 182M, Grade F, 300-series, Type 304, 304L, 316, or 316L. Stainless-steel butt-welded fittings shall be ASTM A 403/A 403M, Grade WP-S, 300-series, Type 304, 304L, 316, or 316L.

1. All grades of stainless steel may be substituted for one another depending on availability and provided the substitution still complies with the above specifications and has prior approval of the Buyer.

2. Piping shall be a listed component as stated in ASME B31.3 (Table 326.1).

3.3.1.6.6 Carbon-Steel Pipe Materials

3.3.1.6.7 Carbon-steel pipe having a diameter of 1-1/2 in. and smaller shall be ASTM A 106, Grade B, seamless. Carbon-steel pipe having a diameter of 2 in. and greater shall be ASTM A 53/A 53M, Type S, Grade B. Carbon-steel pipe flanges and flanged, socket weld, or screwed fittings shall be ASTM A 105/A 105M. Material for butt-welded fittings shall be ASTM A 234/A 234M, Grade A WPB. Piping shall be a listed component as stated in ASME B31.3 (Table 326.1). Stainless-Steel Tubing

All stainless-steel tubing shall be seamless and shall meet the chemical and physical characteristics given in ASTM A 269. Tubing shall be a listed component as stated in ASME B31.3.

3.3.1.6.8 Stainless-Steel Tubing Fittings

Fittings for instrument air tubing may be Swagelok® compression fittings or approved equivalent, stainless steel, 300 series, per ASTM A 276 or ASTM A 182/A 182M. CoCs shall be provided.

3.3.1.6.9 Steel Forgings and Wrought Piping Fittings

All forgings, including flanges, and wrought piping fittings shall be listed components as stated in ASME B31.3 (Table 326.1), and shall meet the requirements of ASTM A 182/A 182M. All stainless-steel forgings and wrought

piping fittings used in the fabrication shall be 300-series stainless steel and shall meet the requirements of ASTM A 403/A 403M, Grade WP-S. Carbon-steel pipe flanges and flanged fittings, and socket weld or screwed fittings shall be ASTM A 105/A 105M. Material for carbon-steel butt-weld fittings shall be ASTM A 234/A 234M, Grade A WPB.

3.3.1.6.10 Piping Gaskets/Seals

Pipe flange connections shall use PSI Inc., LineBacker® sealing gaskets with stainless steel as the retainer material and Viton® as the sealing element. LineBacker® Type F sealing gaskets shall be used for raised-face flanges and LineBacker® Type E sealing gaskets shall be used for flat-face flanges.

1. All elastomeric seals shall have radiation resistance for the radiation dose levels shown in this specification. Viton® is acceptable for the radiation levels specified.

2. CoCs shall be provided.

3.3.1.6.11 Weld Filler

The weld filler material shall be as specified in the approved Welding Procedure Specification, see Section 3.3.1.13.

3.3.1.6.12 Pipe Bends

Considerations for pipe bending are listed below:

1. Elbows and pipe bends not manufactured in accordance with listed standards in ASME B31.3 (Table 326.1) may be provided in accordance with ASME B31.3 (Paragraphs 304.2 and 332).

   a. The material shall be suitable for the bending process.

   b. The finish shall be free of cracks and substantially free from buckling.

   c. The wall thickness after bending shall not be less than minimum wall thickness considering corrosion-erosion and mill under-run tolerance.

d. The minimum wall thickness of the bend intrados and extrados shall not be less than that calculated by equations listed in ASME B31.3 (Paragraph 304.2).

e. Bend flattening (the difference between maximum and minimum diameters at any cross section) shall not exceed 8 percent of nominal outside diameter for internal pressure. Metal shall not be removed to achieve these requirements.

f. The proposed assembly layouts shall meet the requirements of ASME B31.3.

3.3.1.7 Structural Materials

3.3.1.7.1 Weld Studs

Weld studs shall be metallurgically compatible with the material in which they are welded. Weld studs shall be made from stock material that meets the requirements of ASTM A 108 for mild carbon steel.

3.3.1.7.2 Carbon-Steel Plate and Sheet

All carbon-steel plate shall be general purpose, hot-rolled, low-carbon steel in accordance with ASTM A 36/A 36M. Carbon-steel sheet shall be provided in accordance with ASTM A 569.

3.3.1.7.3 Carbon-Steel Shapes

Carbon-steel structural shapes shall conform to the requirements of ASTM A 36/A 36M.

3.3.1.7.4 Carbon-Steel Bars and Rods

Carbon-steel bars and rods shall conform to ASTM A 108 with a minimum yield of 36,000 psi and maximum carbon content 0.35 percent.

3.3.1.7.5 Carbon-Steel Structural Rectangular Tube

Structural carbon-steel, rectangular tubing shall conform to the requirements of ASTM A 500, Grade B.

3.3.1.7.6 Stainless-Steel Sheet and Plate

Stainless-steel sheet shall meet the chemical and physical requirements of ASTM A 240/A 240M and ASTM A 480/A 480M. Stainless-steel plate shall meet the chemical and physical requirements of ASTM A 240/A 240M. The plate shall be provided with a cleaned finish.

3.3.1.7.7 Stainless-Steel Bars and Shapes

Parts made from stainless-steel bars and shapes shall be Series 300 stainless steel. Stainless-steel bars and shapes shall meet the chemical and physical requirements of ASTM A 276.

3.3.1.8 Fasteners

The Seller shall select fasteners, when they are not specifically called out in this specification, using the following guidelines:

1. Carbon-steel bolts, nuts, and washers shall be used where mating parts are not stainless steel;

2. Stainless-steel bolts, nuts, and washers shall be used when the mating parts are stainless steel;

3. Pipe flange bolting components shall be listed in ASME B31.3 (Table 326.1) meeting the requirements of ASME B18.2.1 and ASME B18.2.2.

4. No fasteners shall be capable of vibrating loose under operating conditions. All such joints should be tack welded or have some equivalent means of ensuring they remain intact. Double-nutting is not an acceptable method of securing fasteners. Low-chloride, Loctite® threadlock may be used where applicable.

5. Low-chloride, anti-galling compound (e.g., Loctite® 8013 or 8009 or Neo-Lube®) shall be applied where stainless-steel bolts are used.

6. Stainless-steel bolts, cap screws, and washers shall be ASTM A 193/A 193M, Grade B8. Stainless-steel nuts shall be heavy hex nuts in accordance with ASTM A 194/A 194M, Grade 8. Stainless-steel

washers shall be ASTM F 436. Bolts and cap screws shall be grade marked.

7. General purpose carbon-steel bolts shall be ASTM A 307 or better, depending on strength and torque requirements. Carbon-steel nuts shall be ASTM A 563a. Bolts and cap screws shall be grade marked.

8. Structural bolts shall be grade-marked and shall conform to ASTM A 325.

9. CoCs shall be provided for all fasteners used for piping, pipe supports, or component support structures.

10. All graded fasteners shall conform to ASME B18.2.1, SAE J429, and ASTM A 354.

11. The Seller shall ensure that suspect or counterfeit fasteners and components are not used. Suspect fasteners can be identified by the following inspection methods:

    a. Head markings are marred, missing, or appear to have been altered;

    b. Threads show evidence of dressing or wear (threads should be of uniform color and finish);

    c. Head markings are inconsistent within a heat lot; and

    d. Head markings matching one of those identified on the U.S. Customs Service *Control of Suspect/Counterfeit Items* (see Appendix D).

3.3.1.9 Electrical – Design and Component Selection

3.3.1.9.1 General

The electrical installation shall meet the requirements of the NEC® (NFPA 70), as administered by the CH2M HILL Hanford Group, Inc. (CH2M HILL) electrical inspector.

Electrical equipment shall be listed or labeled by a Nationally Recognized Testing Laboratory (NRTL), such as Underwriters Laboratories, Inc. (UL), when a

category exists. Note: NRTL's are listed on the Occupational Safety and Health Administration website at http://www.osha-slc.gov/dts/otpca/nrtl/index.html. It is the Seller's responsibility to ensure the listing is appropriate for the equipment specified.

It is the Seller's responsibility to obtain a listing or label for equipment without a listing or label by a NRTL.

When a listing or label can not be obtained, it is the Seller's responsibility to provide equipment critical characteristics, engineering data, and test data for the Buyers engineer to evaluate the acceptance of the product.

Any component, equipment, assembly, or system without a NRTL listing or label shall be subject to the approval of the CH2M HILL electrical inspector.

Where NEC® inspection is required, the Seller shall arrange for a CH2M HILL NEC® inspection to occur at the Seller's facility before shipping any assembly not covered in whole by a NRTL listing or label. The Seller shall perform modifications as required by the NEC® inspector before shipping.

Cabinets containing assembled control systems shall be designed, constructed, and listed or labeled to UL 508A, as applicable.

Design and operation of the assembled system shall meet the requirements of IEEE Std 141, IEEE Std 142, IEEE Std 242, and IEEE Std 519.

A permanent plaque or directory shall be installed at each feed and branch circuit disconnect location denoting all other services, feeder or branch circuits supplying the skid.

3.3.1.9.2 Electrical – Routing

The Seller shall select the routing of conduits between devices and the power and instrumentation and control enclosures. Care shall be taken to run conduit along the frame members where they can be mounted. Care shall be taken to select routes where conduit does not interfere with maintenance or replacement access to devices such as pumps or valves. Sketches of the routing locations shall be submitted to the Buyer for review and approval before proceeding with the work.

3.3.1.9.3 Electrical – Grounding

1. All power circuits shall include a ground wire that serves as the equipment grounding conductor, independent from the neutral wire. All powered devices shall be connected to the ground circuit wire. In addition, the skid frame, enclosures, raceways, covers, and enclosure doors shall be attached to the electrical ground. This may be accomplished by means of a screw, lock washer, and ring connector attachment at a spot where all paint and surface corrosion has been cleaned from the frame. The frame shall not be used as a current carrying conductor between devices.

2. Ground wires shall be green-insulated or bare-stranded copper wire.

3. Ground conductors shall be unspliced and continuous between termination points. Ground distribution shall be through terminal blocks or a ground bus. Wire nuts or butt splices are not acceptable.

4. The resistance between the main ground connection to the skid and any point in the ground circuit shall be less than 0.1 ohm as measured with a calibrated ohm meter.

5. The instrument ground circuit shall be separate and isolated from the power ground circuit to the extent allowed by the NEC® (NFPA 70). The requirements for the instrument ground circuit installation are the same as the power ground requirements given above.

3.3.1.9.4 Electrical – Conduit Fill

The sum of the cross-sectional areas of all contained conductors shall not exceed the interior cross-sectional area of the raceway as calculated in the tables in Chapter 9 of the NEC® (NFPA 70) for raceway fill.

3.3.1.9.5 Electrical – Strain Relief

Strain relief shall be provided for all cables. The strain relief device shall comply with the following:

Strength - The device shall be capable of withstanding a 35 lb pull for one minute (from any direction) without allowing movement of the raceway or cable that could damage the conductor insulation or strain the conductor terminations.

3.3.1.9.6 Electrical – Conduit Support

Conduit shall be supported by attachment to the frame. The Seller shall provide rigid brackets or additional frame members for attaching conduit when frame members are not in a convenient location. Attachment shall be on regular intervals per NEC® (NFPA 70). Attachment shall be made using "U" clips which may be connected to the frame using either weld studs and nuts or bolts or approved NEC® (NFPA 70) method.

3.3.1.9.7 Electrical – Segregation of Control and Power Wiring

Power circuit wiring and control circuit signal wiring shall be run in separate conduits. Signal wiring that transmits ac signals shall be run in separate conduits from signal wiring that transmits dc signals.

3.3.1.9.8 Electrical – Splicing

No splicing is allowed. The Seller shall provide junction boxes with terminal blocks for connection of devices such as valves and instrument sensors that are provided with pigtail leads.

3.3.1.9.9 Electrical – Enclosure Wiring

All enclosure wiring shall be routed, harnessed, appropriately laced, or in plastic wiring ducts. Where possible, all electrical penetrations into cabinets shall be from the bottom of the cabinet.

3.3.1.9.10 Electrical – Instrument Enclosures

Exposed live parts and contacts (greater than 50V) in enclosures shall be guarded to prevent unintentional contact during maintenance activities. Door-mounted equipment shall be constructed or shielded so that no live parts will be exposed to unintentional contact when the door is open.

3.3.1.9.11 Electrical – Enclosures

Unless otherwise noted, outdoor enclosures shall be rated NEMA 4; indoor enclosures shall be rated a minimum of NEMA 12.

3.3.1.9.12 Disconnect Switches

As shown on Sketch DBVS-SK-E104, 480V ac, nonfused, horsepower-rated, disconnect switches shall be installed on the skid assembly. They shall be accessible to maintenance personnel, be within sight of the associated load, and be labeled clearly with the equipment number and description of the load that they serve in accordance with Sketch DBVS-SK-E104. Disconnect switches shall be designed to be locked and tagged out. Disconnect switches shall be labeled with the load they serve. Incomplete load designators will be revised at the time of bid.

Component data sheets for the disconnect switches are provided in Appendix C.

3.3.1.9.13 Transformer and Distribution Panel

A 480-120/240V ac single-phase transformer and associated distribution panel shall be installed on the skid assembly. The distribution panel and transformer may be combined as a single unit (e.g., Square D® Mini Power-Zone®). A detailed panel schedule listing breaker sizes and loads shall be located inside the panel door and provided as one of the shop drawings.

Electrical power shall be distributed to all electrical components (except 3-phase motors) from this distribution panel. Circuit breakers serving convenience receptacles shall be protected by GFCI circuit breakers. GFPE breakers shall be used for heat-trace applications.

3.3.1.9.14 Electric Motors

1. Electrical motors shall be designed and tested in accordance with NEMA MG-1.

2. Motors 1 hp and greater shall be 3 phase.

3. Electrical motors shall be rated at 460V ac, 3 phase, 60 Hz.

4. Electrical motors shall have a minimum service factor of 1.15.

5. Electrical motors shall have a minimum insulation class of F, as defined in NEMA MG-1.

6. The Seller shall provide the electrical motor specifications and data sheet to the Buyer for approval before final selection.

3.3.1.9.15 Pushbutton Stations

Local pushbutton stations shall be provided for the pumps and motors, and shall be located on the support structure in a readily accessible location within sight of the motors. The Seller may combine the pushbutton stations into a single enclosure, providing that the orientation of the pushbuttons and lights remains the same for each motor, labeling is clear, and a terminal strip is provided in the enclosure. Each pushbutton station shall be labeled with its respective designator in accordance with Sketch DBVS-SK-E104 (Appendix A). Control wiring from pushbutton stations for Scrubber Tank Pump A and Scrubber Tank Pump B shall be routed to an external terminal box and labeled in accordance with Drawings F-145579-00-E-0111 (Sheets 1 and 2) and F-145579-00-E-0112 (Sheets 1 and 2) (Appendix A). Schematics shall be provided for other motor loads at the time of bid.

Component data sheets for the Pushbutton Stations are provided in Appendix C.

3.3.1.9.16 Receptacles

Convenience receptacles shall conform to NEMA 5-15R. Duplex receptacles shall be installed for general purpose use.

3.3.1.9.17 Lighting

The Seller shall provide photo-cell-activated skid-mounted, weatherproof, high-pressure sodium light fixtures as required around the perimeter of the skid. Lighting levels shall be confirmed by light meter test before delivery.

3.3.1.10 Electrical Materials

3.3.1.10.1 Conduit

Rigid galvanized steel (RGS) conduit or electrical metallic tubing shall be used in accordance with the NEC® (NFPA 70). The RGS shall be UL-approved standard weight, 1/2 in. minimum size for control wiring and 3/4 in. minimum size for power wiring.

Liquid-tight flexible conduit shall be installed where flexible conduit is required or where connecting to vibrating loads. Liquid-tight flexible conduit shall be grounding type with a polyvinyl chloride jacket.

Conduit fittings shall be standard steel threaded, liquid-tight, type-RGS fittings.

3.3.1.10.2 Wire and Cable

Conductors shall be stranded copper for all sizes of wire and cable unless specifically designated otherwise on the drawings.

Wire insulation shall be Type THHN (heat-resistant. thermoplastic)/THWN (moisture and heat-resistant thermoplastic) for all 600V conductors unless specifically noted otherwise on the drawings.

Minimum size of power conductors, 600V and below shall be No. 12 American wire gauge (AWG).

Conductors for control circuits shall be No. 14 AWG minimum, except that remote control circuits, signaling circuits, instrumentation, and power limited circuits may be sized smaller in accordance with the NEC® (NFPA 70).

Power wiring shall have color-coded insulation as indicated in Table 3-4.

Table 3-4: Wire Color Coding Requirements

Service, Feeder, or Branch Circuit	Conductor	Insulation Color	Insulation Type
480V ac, 3-phase systems	Phase A	Red	THWN/THHN
	Phase B	Yellow	
	Phase C	Blue	
	Equipment Grounding Conductor	Green (or bare)	
120/240V ac, 1-phase systems	Hot No. 1	Black	
	Hot No. 2	Brown	
	Neutral	White or Gray	
	Equipment Grounding Conductor	Green (or bare)	

Instrumentation cable shall be 600V, multiconductor for discrete signals, flame retardant, jacketed cable suitable for installation in wet or dry locations. Conductors shall be a minimum of No. 18 AWG stranded, tinned copper, in twisted pairs/triads with ethylene propylene insulation. Each pair/triad shall be shielded with a drain wire and metallic tape. Multipair cables shall have an individual shield and an overall shield of metallic tape and drain wire. Conductor color coding shall be black, white (and red if triad). Temperature rating shall be 194 °F (90 °C). Each pair/triad shall be numbered for simplified termination.

Control and power multiconductor cable shall be 600V, flame resistant, radiation resistant, jacketed cable suitable for wet or dry locations. Conductors shall be stranded copper with ethylene propylene insulation with a temperature rating of 194 °F (90 °C).

3.3.1.10.3 Connectors

Crimp-on, flat, loop connectors (i.e., Sta-kon®) shall be used. Crimp-on connections shall be performed in accordance with manufacturers-recommended crimping procedures. Flat-spade connectors shall not be permitted.

3.3.1.10.4 Electrical Wire/Cable Markers

Conductors shall be identified with white heat-shrink tubing with indelible black typed-on letters. Hand-lettered labels shall not be used.

3.3.1.11 Drawings

The Seller shall provide all design drawings necessary for the wet scrubber skid assembly which includes, but is not limited to, drawing outlines, interface drawings, electrical wiring diagrams, control wiring diagrams, pipe support drawings, dimensional drawings, rigging sketches, and as-built drawings. Drawings shall be submitted to the Buyer for review and approval.

The Seller shall develop drawings that detail how the specified parts and materials will be assembled to meet the requirements of this specification. The drawing package shall include detail fabrication drawings, assembly drawings, arrangement drawings, general electrical drawings, electrical wiring and conduit schedule, and final as-built drawings. Drawings shall have a parts and materials list, as applicable, that clearly identifies quantity, manufacturer, the part or model number, material type and grade, electrical characteristics, size, and general

descriptions. Drawings shall include dimensional layouts, dimensioned subassemblies, dimensioned component details (if not included on manufacturer's cut sheets), flow and electrical diagrams, material and fastener sizes, descriptions, weld symbols, and notes. The arrangement drawings shall provide weight and center of gravity locations for the overall assembly as well as for major subassemblies (e.g., skid-mounted equipment within a larger assembly or large equipment moved and mounted as a unit).

The assembled system shall be designed to comply with the P&ID and include all components specified on the P&ID provided in Appendix A. If conflicts arise between the proposed design and the P&ID, they shall be brought to the attention of the Buyer for resolution. Any changes from the approved drawings shall be identified to the Buyer using the Request for Information form (Appendix E) for review of the change. The change shall then be controlled by the Seller to ensure the fabrication drawings are properly updated to incorporate the change. Final as-built drawings shall be prepared by the Seller at the conclusion of fabrication and testing.

Drawing size shall be per ANSI Y14.1. Parts and materials list shall include quantity, manufacturer, the part or model number, material type and grade, electrical characteristics, size, and general descriptions. All component parts shall refer to applicable material specifications, such as the military, ASME, ASTM, federal, or other specifications. As-built drawings shall be verified in accordance with QA Program Controls before submittal, and shall be in accordance with Buyer-supplied drawing procedures.

Drawings shall be prepared using AutoCAD® compatible drafting software. A copy of all as-built drawing files (one of which shall be an electronic AutoCAD® release 2000 or higher compatible file format) shall be included in the final drawing package. Drawings shall use the ROMANS AutoCAD® text font and the minimum text height shall be 1/8 in.

3.3.1.12 Material Control Process

The Seller shall develop a material control procedure to be used in the execution of the work. The material control procedure shall address procurement controls, segregation, and traceability of materials including weld filler rod from receipt at the shop through processing.

3.3.1.12.1 Exposure of Stainless Steel to Chloride Materials

Stainless steel shall not be in contact with materials containing more than 250-pm chlorine. Low-chloride markers shall be used. Chlorinated solvents shall not be used to clean stainless steel.

Contact of Stainless and Carbon Steel Contact between carbon steel and stainless steel shall be avoided during fabrication. Temporary carbon-steel clamps, supports, braces, and fixtures shall not come into direct contact with stainless-steel surfaces. Galvanized-steel clamps or fixtures may not be used on stainless-steel piping or components. Wire brushes shall be stainless steel. Grinding wheels and wire brushes shall be new or used previously on stainless steel only.

3.3.1.13 Welding Process

All welding performed by the equipment housing manufacturer and/or the scrubber train fabricator/manufacturer shall be in accordance with ASME N509 and ASME AG-1 (see Appendix B) and based on published consensus standards such as AWS D1.1/D1.1M, ANSI/AWS D1.3, AWS D1.6, AWS D9.1/D9.1M, and ASME B31.3.

Weld size and type shall be selected by the equipment housing manufacturer and/or the scrubber train fabricator/manufacturer based on applicable seismic, wind loading, and system pressure requirements established within this specification.

Welding of all pressure piping shall be performed in accordance with the ASME B31.3 piping code for "Normal Fluid Service," at a minimum.

Certified welders shall perform welding of all structural steel in accordance with AWS D1.1/D1.1M or AWS D1.6 (depending on material).

Welding Procedures, Procedure Qualification Records, and Welder Procedure Qualification Records shall be submitted for review and approval.

3.3.1.13.1 Welding Procedure Requirements

All welding shall be performed in accordance with the Seller's approved Welding Procedure Specification. Each Welding Procedure Specification shall be

qualified with a Procedure Qualification Record as required in ASME B&PV Code, Section IX; AWS D1.1/D1.1M; and AWS D1.6, as applicable.

Welding of all stainless steel including, but not limited to, structural shapes, rectangular tubing, plate, and sheet shall be performed in accordance with AWS D1.6 nontubular, statically-loaded conditions. Welding of stainless-steel or carbon-steel piping shall be performed in accordance with the ASME B31.3 piping code for "Normal Fluid Service." Automatic pipe welding equipment and techniques may be used.

Welding of all carbon steel including, but not limited to, structural shapes, rectangular tubing, plate, and sheet shall be performed in accordance with AWS D1.1/D1.1M nontubular, statically-loaded conditions.

Welded connections on the lifting components shall be 100 percent visual and 100 percent Dye-Penetrant Test or Magnetic-Particle Test inspected. If a weld is in a radioactive material boundary (e.g., process piping), then these welds will require a minimum of a visual inspection and additional nondestructive examination (NDE) (dye penetrant, magnetic particle, or x-ray, as appropriate).

All load bearing welds, or welds deemed critical by the Buyer, shall be inspected with liquid penetrant by the Buyer. Examples of critical weldments are the venturi and ductwork connections that are deemed critical by the structural and applied loads analyses.

If the equipment housing manufacturer's weld inspection procedures defining specific weld acceptance criteria are based on, include or exceed this specification's referenced requirements of ASME N509 (Section 7.3), then a copy of their procedure, marked to indicate the applicable requirements, shall be submitted as part of the NDE procedures package for approval before the start of fabrication.

3.3.1.13.2 Weld Joints and Preparation

Weld joints are as permitted by the referenced standards. Weld joint design, as noted on the fabrication drawings, shall be sent to the Buyer for review and approval before fabrication.

Post-weld heat treatment of carbon-steel piping is not required.

3.3.1.13.3 Weld Repairs

Weld defects shall be removed and repaired as allowed by the referenced standards. The original Welding Procedure Specification shall be used for weld repair. Welds that fail inspection shall not be ground out and repaired more than twice before the section is abandoned and replaced.

3.3.1.13.4 Weld Map

Welds (including typical welds) shall have unique numbering listed on a weld map(s). The weld map(s) shall include the weld number, weld procedure number, filler material control number, welder identification, NDE procedure number, and examiner identification. Individual weld maps are to be provided per component when multiple components are produced.

Weld identification shall be performed as follows:

1. Prepare weld identification drawings, isometric or spool, which show relative position of pressure containing welds and attachment welds to pressure retaining components.

2. Assign weld numbers to pressure-containing welds and attachment welds to pressure retaining components as made. Record weld numbers on weld identification drawings as welds are made.

3. Place the welder bonder identification symbol and weld number adjacent to welds on completion. Place the identification symbol approximately every 3 ft on long seams or large welds.

4. Do not reuse weld numbers. If a weld is completely replaced, assign a new number.

5. Show heat and lot numbers on weld identification drawings for materials.

Weld identification documentation shall be submitted to the Buyer for review and approval.

3.3.1.14 Fabrication Traveler

The Seller shall provide fabrication traveler(s) for the fabrication and testing of the above described wet scrubber skid assembly equipment. The fabrication traveler(s) shall include detailed procurement, fabrication, assembly, testing, shipping, and handling steps required to properly fabricate, assemble, and test the equipment in accordance with the drawings and specifications.

3.3.1.15 Monitoring and Control System

The MCS philosophy is a combination of local and remote operations (Section 3.1.2.8.3). The Seller shall interface with the physical instruments and components through the use of a Seller-provided termination panel. The termination panel shall be located on the outside, shall meet UL 508A (as required), shall be rated for outside environmental condition, shall be easily accessible for maintenance (approximately 60 in. high from the ground); and shall meet NEC® (NFPA 70) requirements for working clearances. The exact location of the panel will be determined based on minimization of wiring, internal skid interferences, and external connection routing.

Only local instruments and components are required to be wired and terminated to the termination panel. The local instruments and components[1] shall be routed in conduit and terminated at the local termination panel. Terminations shall be tension-clamp terminals capable of individual replacement (i.e., DIN rail mounted). An example is a Weidmüller® type WDU. Alternating current power and alternating current/direct current inputs shall be physically separated.

The normal field voltages from or to the MCS is 24V dc, which enhances personal safety during maintenance. Over 50V represent hazardous voltage which should be avoided unless authorized by the Buyer. This does not apply to equipment that requires 120V ac, but with low voltage interfaces to the MCS.

The Seller shall provide an interface panel wiring to an instrument/component drawing. See Figure 3-1 as an example.

---

[1] Instruments shown on the drawings with a box around the symbol are Monitoring and Control System virtual displays or controls and require no action by the Seller.

DMJM technology

amec

TECHNICAL SPECIFICATION

PROJECT:	**Final DBVS Design**	**145579-D-SP-037**	**REV. 1**
PROJECT NO.:	**145579**	**WET SCRUBBER SKID ASSEMBLY DESIGN AND FABRICATION**	
CLIENT:	**AMEC E&E - Richland, Washington**		

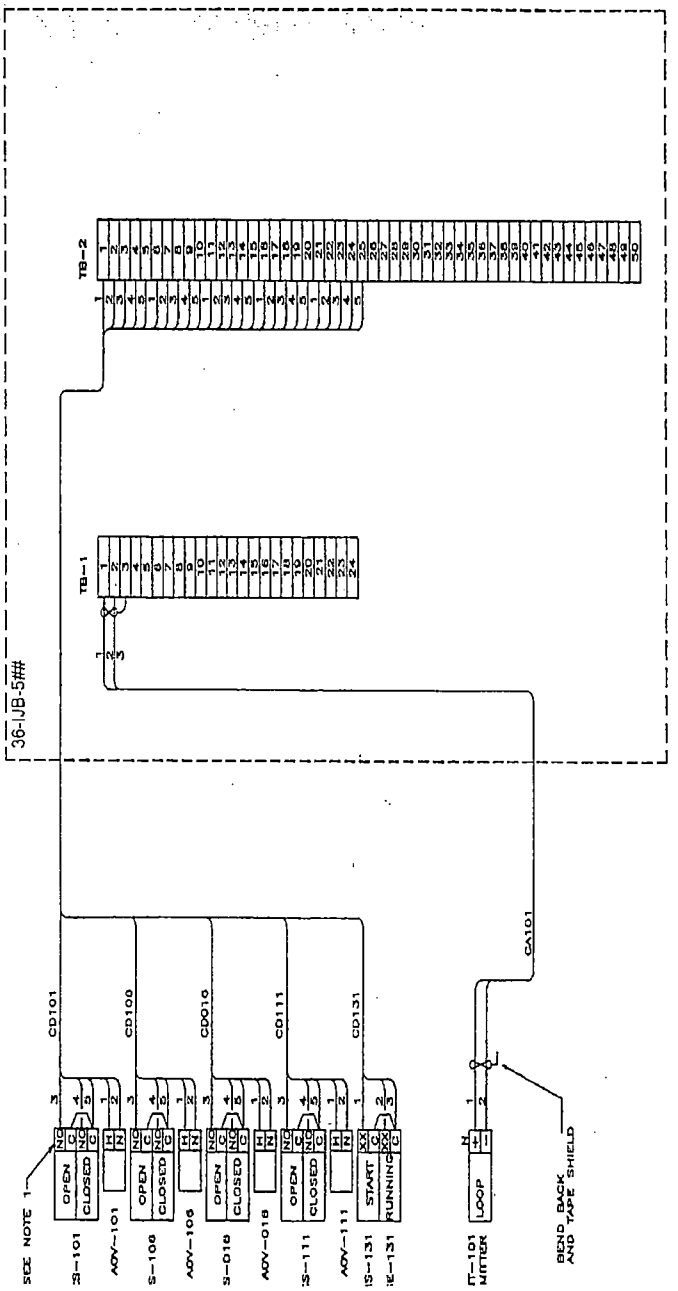

Figure 3-1: Interface Panel Wiring to Instrument/Component Drawing (Example)

Twisted shielded pair shall be used for analog instrument signal wiring. Individual wires shall be labeled for the destination with the cable being labeled with both FROM and TO information (see Appendix G).

3.3.1.16 Instrument Calibration and Characteristics

All instrument transmitters shall provide an isolated 4-20-mA signal to the MCS, unless a different output is required for the process. Justification shall be clearly indicated on the completed component data sheet. All pneumatic control valves shall accept a 4-20-mA control signal from the MCS and provide position indication to the MCS. Interface connections shall be through wire termination points on the instruments. Instruments, tubing, piping, and wiring shall be installed in accordance with the instrument manufacturer's recommendations and the best practice for the industry. Purchasing and installation of the MCS input/output modules are not included in this contract. Locally indicating instruments/sensors shall be installed such that they are easily readable by an operator standing on the floor at the entry access point to the wet scrubber skid assembly skid. The Buyer shall provide guidance with positioning based on best available knowledge of the configuration.

All instruments shall be factory-calibrated and a calibration data package shall be provided including a Certificate of Calibration traceable to the National Institute of Standards and Technology (NIST), for each article contracted. In addition, the actual Calibration Records for each instrument shall also be included containing the instrument identification, accuracy requirements and results, the as-found and as-left data, and the calibration expiration date.

Each calibration certificate shall be signed by the Seller's representative responsible for calibration, attesting to its authenticity and shall be identified with the:

1. Buyer's contract number,

2. Identification of the article to which the certificates applies, and

3. Standards used for calibration.

The Certificates of Calibration will be held on file by the Buyer's Records Management as objective evidence to support the actual test results and attest to the fact that the calibrated item(s) met requirements.

Certification stating the equipment furnished to the contract requirements has been calibrated using standards whose calibration is traceable to the NIST or other documented evidence, must be submitted stating the basis of the calibration. In addition, the Seller shall submit a report of actual calibration results. The report shall be identifiable to the acceptance criteria of the items submitted and shall meet contract requirements. The report shall contain the signature of the authorized representative of the agency verifying compliance. One copy of the documentation, unless otherwise specified, shall accompany the applicable item(s) shipped.

The Seller shall provide Instrumentation types and manufacturer to the Buyer for approval before purchase of the instrument. Recommended field recalibration procedures shall also be provided in the final data package along with a list of special tools required for recalibration.

Component data sheets for the process instrumentation are provided in the Bidder's Drawing and Data Commitments sheet (Appendix F).

3.3.1.17 Mechanical Assembly Requirements

All equipment shall be assembled to the structural frame observing the equipment manufacturer's recommended assembly instructions. Equipment shall be checked to ensure that it is provided with adequate amounts of fresh lubricants of the proper selection.

3.3.1.18 Workmanship

General: Remove all burrs and break all sharp edges.

1. Drawings:

    a. Dimensioning and tolerancing shall be interpreted per ANSI Y14.5M and

b. Tolerances not specified on drawings shall be as shown in Table 3-5.

Table 3-5: Standard Drawing Dimension Tolerances

Dimension	Tolerance
One Decimal Place	± 0.1
Two Decimal Places	± 0.06
Three Decimal Places	± 0.030
Angular	± 2°

2. Welding to ball valves:

   a. Ball valves shall be disassembled before welding to the valve body.

3. Piping and components:

   a. Pipe flange, man-way, and flange faces shall be within ± 2° of vertical or horizontal, whichever is appropriate;

   b. Pipe flange bolt holes shall straddle centerlines;

   c. Material and debris shall be removed from piping and components before welding/assembly; and

   d. Secondary containment housing flanges shall be flat.

3.3.2 Industry and Government Standards

The codes, standards, and source documents that provide the design fabrication and testing requirements are listed in Section 2. Sections within this specification provide specific details or reference for application of the codes and standards documents. Conflicts found between the referenced codes and standards will be referred to the Buyer for resolution.

3.3.3 Radiation

3.3.3.1 Electromagnetic Interference/ Electromagnetic Compatibility

The equipment shall be designed in accordance with the limits set forth in HNF-2962 as summarized in the following subsections.

3.3.3.1.1 Unintentional Radiators

Equipment shall comply with the emission limits specified in 47 CFR 15, Subpart B. The Seller must provide certification that the emissions from equipment or the device are within the limits specified in 47 CFR 15 or a Federal Communications Commission-accepted international standard.

3.3.3.1.2 Radio Frequency Interference Susceptibility

Applicable equipment shall be tested and evaluated for the immunity to radio frequency interference from portable communications equipment. The testing method and procedure for testing process instrumentation are found in IEEE Std C37.90.2.

Since the frequencies of interest are in the bands of 120 to 190 MHz and 420 to 480 MHz, the equipment shall be evaluated from 20 to 1,000 MHz. The electric field intensity of 30V/m shall be used for testing.

3.3.3.1.3 Equipment Alternating Current Mains Surge Protection

Applicable equipment shall be designed to withstand the surge waves specified in IEEE C62.41.1 and C62.41.2. The equipment shall be type tested by the manufacturer in accordance with this standard, and certification provided by the Seller.

3.3.3.1.4 Electrostatic Discharge Protection

The system or individual parts of the system shall not be damaged and shall continue to function after being subject to electrostatic discharge on operating panels and other controls normally available to operating personnel. The manufacturer shall provide certification that electrostatic discharge testing was performed according to the methodologies found in ANSI C63.16. The test

voltage should be at least 4 kV. ANSI C63.16 provides additional references to selecting the proper voltage ranges to be used.

3.3.3.2 Nuclear

All materials of fabrication shall be evaluated to be able to operate without loss of service while exposed to the maximum estimated unshielded contact radiation dose of 4.5×10^4 R based on a 5-year design life.

3.3.4 Cleanliness

Before assembly, and before preparing for shipment, all components shall be cleaned by flushing clean water and/or blown clean and dry with compressed air to the extent that extraneous materials, such as those listed below, are not present:

1. Metallic or other dusts (shop dust), chips, turnings, and weld splatter;
2. Abrasive particles;
3. Rust and other loose corrosion particles;
4. Magnetic/liquid penetrant residues, dye check, etc.;
5. Foreign material (i.e., paper, tape, plastic, sand, and wood);
6. Cutting oils;
7. Excess lubrication, grease, and oil; and
8. Marking dyes.

The fabrication traveler shall describe the cleaning and packaging steps taken.

The wet scrubber skid assembly equipment ports and pipe openings shall be temporarily capped following cleaning and drying for shipment. Packaging requirements following cleaning are documented in Section 5.2.

3.3.5 Corrosion of Parts

Solvents and cleaning solutions used on stainless steel shall be chloride-free. Stainless-steel components do not require painting except as required for identification or other markings. Paint, if used, used on stainless steel shall be epoxy-phenolic.

All exposed surfaces of carbon-steel parts shall be protected from corrosion by priming and painting (see Section 3.3.6 for protective coating requirements).

To the extent practical, connections between dissimilar metals shall be avoided.

3.3.6 Protective Coatings

Protective coatings shall be used on equipment where specified in this specification and shall be compatible with the process fluid streams. Protective coatings shall be used on the appropriate equipment in order to meet the reliability and maintainability requirements; to protect equipment from the environmental conditions; and to provide a clean, smooth surface for decontamination. The weldments shall be completed and painted entirely before installation of piping and components in the frames. Care shall be taken to protect the paint during equipment installation. Touch-up shall be performed to repair paint defects after the equipment installation is completed. Protective coating specifications shall be submitted to the Buyer for review and approval before fabrication. All exposed carbon-steel surfaces shall be painted with the manufacturer's standard color.

3.3.6.1 Painting Preparation

The Seller shall prepare all surfaces in accordance with the manufacturer's instructions. Painting shall be performed in a clean, well-ventilated area separated from airborne particulates generated by shop operations.

3.3.6.2 Paint Application

1. All exposed carbon-steel surfaces shall be prepared and painted with a minimum of one coat of primer and a minimum of two finish coats.

2. Paint shall be applied to dry, clean, and adequately prepared surfaces in accordance with manufacturer's instructions. Each coat of paint shall be

properly cured according to manufacturer's instructions before applying additional coats.

3. All paint containers shall remain closed until required for use. Paint shall be mixed before use in accordance with manufacturer's instructions. Agitation during application must be provided where specified by the manufacturer.

4. Paint may be applied with a brush or sprayer according to manufacturer's instructions.

5. All coats shall be applied in such a manner as to produce a film of uniform smoothness. Special attention shall be paid to crevices, weld lines, corners, and edges to obtain the required thickness.

6. The manufacturer's instructions for thinning, mixing, handling, and applying the products shall be considered to be part of this specification.

7. All coats shall be applied to produce a film of uniform smoothness and nominal thickness of not less than 3 mils with a total minimum thickness (with primer and top coat) of 5 mils. Special attention shall be paid to crevices, weld lines, corners, and edges to obtain the required thickness.

3.3.6.3 Primer

The Seller shall use standard zinc-rich primer for carbon-steel structures or piping. Precoated or stainless-steel pipe support components do not require painting.

3.3.6.4 Paint

1. The Seller shall use a standard top coat compatible with the primer for finish coats on carbon-steel structures or piping.

2. Precoated or stainless-steel pipe support components do not require painting.

3. The top coat of painted equipment shall be white to minimize solar heat load.

3.3.7 Interchangeability

The Seller shall specify the assembly level at which components shall be interchangeable or replaceable. This is a design consideration to be reflected on the design drawings and/or supporting documents (such as calculations and analyses).

3.3.8 Identification and Marking

Component identification labeling shall be performed in accordance with the following guidelines and shall match the final P&ID or electrical one-line diagram for the assembled system.

3.3.8.1 Equipment Labeling

The Seller shall label all valves, instruments, and mechanical equipment in accordance with this specification. Equipment to be labeled shall include, as a minimum:

1. Valves or dampers;
2. Label external valves;
3. Instruments and gauges, pumps, motors, and filters;
4. Transformers, distribution panels, instrument enclosures, and switches; and
5. Junction boxes shall follow the labeling convention below:
   a. Instrument (24V dc): 36-IJB-5##
   b. Electrical (110V ac): 36-EJB-5##
   c. Power (110V ac): 36-PJB-5##

Only the EIN is required to be on the tag. Tags shall be 1-3/8 in. by 2-3/4 in. minimum and use 3/16-in.-high black text on white background. The tags shall be plastic and have at least a single hole for attaching to components.

Tags shall be attached to components without a flat surface using a nylon tie wrap. Tags shall be attached to components with a flat surface using clear silicon rubber adhesive. Equipment tags shall be located where they are readily visible and not subject to damage or accidental removal during equipment operation. Tags shall be suitable for the environment on which they are installed.

3.3.8.2 Piping Labeling

Piping shall be marked with arrows and fluid type to denote the direction and the fluid conveyed. The fluid conveyed shall be marked as "PROCESS," "CAUSTIC," "CHILLED WATER," "FILTERED WATER," or "COMPRESSED AIR," etc. as applicable. Text shall be all capital letters. The label background and lettering colors shall be as follows:

1. Process fluid or caustic piping shall be yellow field with black letters.

2. Chilled water or refrigerant piping/tubing shall be blue field with white letters.

3. Compressed air piping/tubing shall be blue field with white letters.

4. Filtered water piping/tubing shall be green field with white letters.

5. Labels shall be made from self-sticking polyester or vinyl (Electromark® part number P400 series or approved equal). For pipes that are less than 3/4 in. in diameter, the label size and lettering shall be appropriately sized to the size of the pipe. Pipe that is greater than 3/4 in. in diameter, the lettering shall be sized in accordance with Table 3-6.

6. The labels shall be placed on pipes in the location most readable from the operator's normal viewing position.

7. Piping labels shall be placed before and after each valve and piping joint.

Table 3-6: Pipe Labeling Format

Pipe Outside Diameter (minimum) (inch)	Pipe Outside Diameter (maximum) (inch)	Length of Color for Field for Pipe Marker (inch)	Size of Letter for Legend (inch)
0.75	1.25	8	0.5
1.5	2	8	0.75
2.5	6	12	1.25
8	10	24	2.5
10	--	32	3.5

3.3.8.3 Wire and Cable Labeling

All wires and cables shall be labeled at both terminations with the identification specified on the contract drawings. Labels for instrumentation wire and cabling shall follow the convention in Appendix G. Wire label material requirements and color coding are given in Table 3-4.

3.3.8.4 Terminal Labeling

Terminal block label tags shall be a durable plastic material. The tag color shall be white background with black lettering. Each terminal on the terminal block shall be labeled with a clearly visible terminal number. Numbered terminal block covers may be used for this purpose.

The tag may be mounted on a surface of the enclosure in close proximity of the terminal block. Tags shall be attached securely by means of durable stranded stainless-steel cable, clamps, or chains.

3.3.8.5 Conduit Labeling

1. All conduits shall be labeled with the identification tag on the contract drawings and the highest voltage contained in the conduit as in the following example:

E-123 - 110 VAC 1PH

2. The minimum letter height shall be 1/4 in. The label length shall be as long as required to contain the required information. The label color shall be white background with black lettering. Text shall be all capital letters. The labels shall be a durable material that is permanently secured to the conduit by an adhesive or mechanical means. The label may be metallic or plastic. The label shall be affixed securely in place in a manner to prevent their loss, damage, slippage, or accidental removal. However, the means used to mount the label should permit its removal when necessary without damage to the surface to which it was attached.

3.3.8.6 Labeling of Handling and Lifting Devices

All equipment that is designed to be mechanically lifted shall have lifting points, the center of gravity, and the lifting weight marked. Lift points shall be identified with yellow paint. All specialized lifting devices shall be marked in accordance with DOE/RL-92-36, as follows.

Structural and mechanical below-the-hook devices shall be provided with identification displaying the following data, as a minimum:

1. Rated load,
2. Manufacturer's name,
3. Lifting device weight (if over 100 lb),
4. Drawing number (if applicable), and
5. Serial number (if applicable).

The identification data may be displayed on a nametag, nameplate, metal stamp, or other permanent marker. If the lifting device comprises several lifting devices that can be detached from the assembly, these individual lifting devices shall be marked with their individual load rating also.

Clearly mark and identify any components required for removal before equipment installation (e.g., shipping blocks).

3.3.8.7 Electric Motor Labeling

The markings on all motors shall be in accordance with the NEC® (NFPA 70) and NEMA MG-1. Care should be taken when painting, such that the motor nameplates, lifting eyes, or lifting swivel manufacture nameplates are not to be painted.

3.3.9 Nameplates

The wet scrubber skid assembly enclosure shall have a manufacturer's nameplate. The nameplate shall include: the project number, purchase order number, equipment name and number (provided by the Buyer), assembly weight; this specification number, latest revision, and other data to be supplied.

The wet scrubber skid assembly shall also have an EIN label (36-D58-002) centrally affixed to the skid. Letter height for this label shall be 3 in., minimum.

3.3.10 Human Engineering

Human factors engineering principles and criteria shall be integrated into the design of systems and the facilities that house and support these systems. Operator movements and accessibility of equipment and controls in the work area shall be considered. Clear and unobstructed access shall be provided to each system component for operation and maintenance.

3.3.11 Design and Qualification

The drawings, calculations, and associated design media shall show full compliance with this specification and Buyer-approved exceptions or modifications. Portions of drawings originated by others, such as as-built vendor information on P&IDs, shall be clearly identified.

To obtain approval for the design of the fabricated system the Seller shall perform the following:

1. Prepare calculations, required by this specification, and document how the results of the calculations were incorporated into the design and fabrication drawings (e.g., adequacy of pump to meet calculated demand, selection of weld size to meet structural requirement).

2. Identify those materials and/or components that require a CoC.

3. Prepare complete data sheets and obtain vendor cut sheets for major components of the assembled system. At a minimum, the set of major components shall be those shown on the P&ID (valves, instruments, equipment, etc.). This information package will be used to evaluate how the Seller has evaluated the form, fit, and function of components for their intended use as shown on drawings and in supporting calculations.

3.3.11.1 Structural Calculations

In general, equipment and structures shall be analyzed and designed in accordance with ASME AG-1, UBC (1997) and ASCE 7-98, as the minimum requirements. The loads and load combinations used in the analysis shall be as defined in UBC (1997) or other national codes and standards, as referenced in this section or as otherwise defined in this specification. In addition, the Hanford Site-specific design requirements are included as part of this specification and shall be incorporated in the analysis, as applicable, in determining the loads, load combinations, and allowable stresses to which the equipment or structures shall be designed.

Calculations shall demonstrate that equipment will withstand applied loads without loss of integrity or release of radioactive/hazardous material. The calculations shall also show that the skid will not tip over nor slide, the use of a friction factor shall be either justified or conservatively not allowed.

3.3.11.1.1 Dead Loads

Dead loads include the weight of all permanent materials and equipment, including the assembled system equipment weight, with and without the weights of fluids and materials being handled.

The unit weights of material and construction assemblies shall be those given in ASCE 7-98. Where unit weights are neither established in that standard nor determined by test or analysis, the weights shall be determined from data in the Seller design and fabrication drawings or from catalog cut sheets.

3.3.11.1.2 Live Loads

Live loads are those loads produced by the use and occupancy of the unit and do not include construction and environmental loads such as wind load, snow load, rain load, earthquake load, flood load, or dead load. Live loads are produced by operations, maintenance workers, and equipment.

1. Live loads shall be not less than the minimum uniform load or concentrated load stipulated in ASCE 7-98.

2. The weight of service equipment that may be removed with change of use of a given area shall be considered as live load.

3.3.11.1.3 Earthquake Loads

Earthquake induced design loads, as a minimum, shall comply with the UBC (1997) Seismic Zone 2B for essential facilities. Seismic assessments shall use the UBC (1997) (Section 1632) or ASCE 4-98, with an importance factor, I_p = 1.5 for structures, systems and components and seismic zone factor, Z = 0.2. The soil profile type as defined by UBC (1997) (Section 1636.2) is taken as SC and with a seismic coefficient, C_a = 0.24, for conservatism.

For load combination evaluations per ASME AG-1 (Table AA-4212), only levels A and B apply.

3.3.11.1.4 Snow Loads

Snow loads for the equipment shall be in conformance with ASCE 7-98. A ground snow load, Pg of 15 lbf/ft^2 shall be used for calculating roof snow load. Unbalanced snow loads resulting from drifting or sliding shall be considered. Live roof loads are not necessary when there is no enclosure of equipment.

3.3.11.1.5 Wind Loads

The equipment, if subjected to a wind load, shall be designed to resist pressures from wind from any direction. Partial wind loading shall be considered if it produces a more severe effect. Wind load design shall comply with ASCE 7-98, using the 85 mph "3-second gust wind velocity" with an importance factor of 1.15, exposure Category C.

3.3.11.1.6 Ash Loads

An ash loading of 5 lb/ft^2 shall be considered in the design of equipment or support structures exposed to the elements. The ash loading shall be evaluated using the load combination, S = D + L + A in addition to other load combinations, defined by the referenced codes and standards in determining the governing loads for design and analysis.

3.3.11.1.7 Load Combinations and Stresses

Load combinations, allowable stresses, and strength requirements as defined in ASME AG-1 (as identified in Appendix B), UBC (1997) and ASCE 7-98 shall be used in determining the governing load combination(s), acceptability of the design, and stability of the equipment or structure.

The stability of the equipment or structure against overturning and sliding shall be determined and the stability maintained, based on a safety factor of 1.5. Anchorage of the equipment components to the support structure(s) shall be designed using the methods in UBC (1997) for life-safety systems (importance factor, I = 1.5).

Anchorage shall comply with UBC (1997). Acceptable types of concrete anchorages include industry-standard, wedge-type, expansion-type anchors having capacities published by the International Conference of Building Officials. Anchor size shall be a minimum diameter of 1/2 in. (12 mm) regardless of calculated anchorage requirements. Alternative anchorage methods or types may be proposed for Buyer consideration.

3.3.11.1.8 Hoisting and Rigging Loads

The lifting apparatus (eyebolts, hoist rings, and lifting bails) shall be designed in accordance with the AISC *Manual of Steel Construction—Allowable Stress Design*, the AISC *Manual of Steel Construction—Load and Resistance Factor Design*, ASME B30.20, and DOE/RL-92-36. Equipment designed and fabricated by the Seller shall have a safety factor of 3 based on yield strength. Equipment purchased by the Seller shall have a safety factor of 5 based on ultimate strength. Documents shall be provided to the Buyer demonstrating incorporation of these safety factors. The Seller shall identify the total weight, the center of gravity, and the lift points and rigging methods necessary for lifting each component. Lift points shall be identified with yellow paint. Any special tooling,

spreader bars, or other recommended fabricated devices for lifting shall be provided by the Seller.

3.3.11.1.9 Secondary Containment Hydrostatic Load

For the secondary containment, the containment structure shall safely contain the volume of waste specified in Section 3.2.1.2.4.

3.3.11.2 Mechanical Calculations

Mechanical calculations performed for the piping system shall be prepared in accordance with piping code requirements in ASME B31.3. As a minimum, calculation shall include the following subjects:

1. Pipe wall thickness calculations for pressure (ASME B31.3, Paragraph 304.1).

2. Stress calculations for sustained loads because of pressure, dead load, and any other sustained loads (ASME B31.3, Paragraph 302.3.5).

3. Stress calculations for displacement stresses, such as thermal loads. Use Equation (16) in ASME B31.3 (Paragraph 319.4) for flexibility analysis on simple systems.

4. Stress calculations for occasional load such as pressure, dead weight, other sustained loads, and earthquake loads (ASME B31.3, Paragraph 302.3.6).

5. Hanger stress calculations for dead weight, wind, thermal, and seismic loads [ASME B31.3, Section 321; ASCE 7-98; UBC (1997); and the AISC *Manual of Steel Construction—Allowable Stress Design* for source reference, in addition use an Importance factor - Ip = 1.5 and seismic coefficient - Ca = 0.34]

The Seller shall determine the need for a corrosion allowance for the processing fluid and operating conditions. This assessment shall be documented and any allowance clearly identified in design calculations and/or material specifications.

3.3.11.2.1 Normal Operating Pressure Loads

Normal operating pressure loads in the piping resulting from the liquid flow condition shall be considered and are to be addressed in the design of the skid assembly. For the design analyses performed in accordance with this specification, the design flow, pressure, and temperature for the various piping systems are listed in Table 3-7.

Table 3-7: Wet Scrubber Skid Assembly Piping Design Conditions (2 sheets)

Description	Design Conditions
Main air stream flow	• To be specified by the Seller
Chilled water supply/return to skid assembly	• Design pressure of 30 psig at 50 °F. Available flow is 120 gal/min at 22 psig developed head. Chilled water will be 50/50 propylene glycol and water. The Seller to specify the required flow for the wet scrubber assembly.
Caustic System	• To be specified by the Seller.
Filtered Water System	• Design pressure of 150 psig at 150 °F.
Compressed air supply to skid assembly	• Maximum normal condition of 5 cfm air at 100 psig and 125 °F. • Design pressure of 150 psig at 150 °F.

w.g. = water gauge.

3.3.11.2.2 Additional Mechanical Calculations

Additional calculations that shall be performed, if applicable for the assembled system, include: head loss (for pump sizing), valve actuator sizing, air stream relative humidity evaluations, heater sizing, and piping and equipment heat-trace load determinations (for freeze protection), if required.

3.3.11.3 Electrical Calculations

Electrical calculations shall be done in support of NEC® (NFPA 70) requirements and requirements of this specification. Calculations shall include, but are not limited to:

1. Electrical load calculation, with any assumptions regarding demand factors or load diversity clearly stated.

2. Wire sizing calculation for all power conductors, with all assumptions regarding duty cycle clearly stated.

3. Equipment sizing/selection calculation (transformers, distribution panels, over current protection, etc.), with any assumptions clearly stated.

4. Raceway sizing calculation, for all conduit and other raceways.

Care shall be taken to ensure that ambient temperature considerations and heat gain from direct sun are considered appropriately when performing calculations for wire and equipment size.

3.3.12 Document Submittal

The following subsections provide the minimum document requirement submittals.

3.3.12.1 General Requirements

Information to be supplied with the bid, for review and as final is shown on the Bidder's Drawing and Data Commitments sheet (Appendix F). The submittals presented on this sheet shall be delivered as the delineated packages for review and approval.

Each document submittal shall be identified with this specification number, item number, purchase order number, and Seller's identification number. Submittals shall be transmitted to the Buyer in accordance with the directions found in the Request for Quote.

Data shall be sufficiently clear to allow legible copies to be made on standard reproduction equipment after microfilming.

Approval by the Buyer does not relieve the Seller from the responsibility for accuracy or adequacy of design under this specification.

Submittals are divided into two types: (1) those requiring "approval before proceeding" (i.e., weld procedures or prepurchase evaluation data) and (2) those requiring "approval before shipment" (i.e., vendor information data).

Submittals requiring approval before shipment will be reviewed to verify completeness and adequacy for their intended purposes.

Unacceptable items that require approval before proceeding will be handled as specified below.

A submittal requiring approval that is not approved by the Buyer will be dispositional as:

1. "Not Approved, Revise and Resubmit." The submittal is considered technically deficient, or incomplete, and is therefore unacceptable. Resubmittal is required; hence fabrication, procurement, or performance of procedures shall not proceed.

2. "Approved with Exception." Fabrication, procurement, and performance of procedures may proceed, and resubmittal is required to verify incorporation of the exception. Final acceptance of the item is contingent on the Buyer's receipt and approval of the corrected submittal.

Submittals requiring approval before shipment that are determined to be incomplete or inadequate will be marked "Resubmit" and will be returned. An explanation of the deficiencies will be included for corrective action by the Seller.

3.3.12.1.1 Design Documentation

The Seller shall provide all shop fabrication drawings that detail how the specified parts and materials will be assembled to meet the requirements of this specification. Shop fabrication drawings shall clearly identify the material type and grade on the Bill of Material. The Seller shall include a Bill of Material and submit to the Buyer for review and approval. Final as-built drawings shall be provided by the Seller at the conclusion of fabrication and testing. Modifications to the arrangement drawing can be proposed by the Seller to improve the fabrication of the total assembly; however, modifications and the detailed

fabrication drawings are to be approved by the Buyer before procurement of material or initiation of fabrication.

The Seller shall fabricate the equipment according to the approved design drawings submitted to the Buyer.

The Seller shall submit design questions and request design changes in writing to the Buyer for resolution or concurrence.

The Seller shall maintain designated full-size drawing sets for incorporating design changes concurred with the Buyer. The Seller shall incorporate all redline changes on the drawings and submit both paper and electronic copies of the as-built drawings to the Buyer.

All design calculations required for the ASME piping, support structure, and lifting and handling shall be included in reports that have undergone independent review by the Seller's qualified personnel. Design calculation reports shall be submitted to the Buyer for review and approval before the start of fabrication.

3.3.12.1.2 As-Built Drawings

The Seller shall deliver to the Buyer three hard copies and one electronic copy of the final fabrication level as-built drawings and specifications accurately depicting the product delivered. Drawings shall include dimensional layouts, dimensioned subassemblies, dimensioned component details (if not included on manufacturer's cut sheets), flow and electrical diagrams, material and fastener sizes, descriptions, weld symbols, and notes. The designer's name, responsible engineer's name, Bill of Materials, and drawing numbers shall appear on the index (cover sheet).

3.3.12.2 Fabrication Traveler Submittal

The Buyer will insert witness and hold points in the fabrication traveler during their review and approval of the fabrication traveler. Witness points can be waived by the Buyer, but must be documented in writing. Hold points require the Buyer personnel to be present during the fabrication, inspection, or test step.

3.3.12.3 Schedule and Component Lead Time

A proposed schedule of fabrication, inspection, and testing of all wet scrubber skid assembly equipment shall be submitted for review with the bid and approval with the submittal of the fabrication traveler(s).

A proposed schedule shall be provided showing the discrete steps and schedule to complete all work described in this specification. The schedule shall identify fabrication drawings, engineering, parts procurements, fabrication, examination, inspection, and testing activities. A list of components and lead time delivery for each component shall be provided to the Buyer. Component substitutions can be proposed by the Seller to improve the fabrication, schedule, or cost; provided such substitutions are approved by the Buyer.

The schedule shall allow two weeks for review and approval of structural calculations and one week for review and approval of all other documents. The Buyer shall provide a calculation review sheet identifying requirements for the calculations.

3.3.12.4 Spare Parts List and Special Tool Requirements

The Seller shall provide the following, as required for installation, maintenance, and operation of the assembly.

1. Recommended spare parts list for Buyer concurrence. The spare parts lists shall be based on equipment mean time between failures and long lead procurement items (long lead defined as longer than four weeks from order placement to delivery).

2. List of required special tools.

3. Special tools manufactured during fabrication shall also be provided on delivery.

4. List of required lubricants.

5. Lubricant required for startup and operations shall be delivered with Material Safety Data Sheets and shall be provided on delivery of related equipment.

Submit spare parts, special tool, and supporting vendor data for review and approval.

3.3.12.5 Final Data Package

The Seller shall not ship the skid assembly and ancillary hardware until all tests and inspections including the FAT have been performed and the final data package is complete and approved by the Buyer (as defined in Appendix F). The Seller shall notify the Buyer three weeks before the intended shipping date. The Seller shall allow the Buyer one week after receiving the package, and before shipment, to review the data package. The final data package shall include all items specified on the Bidder's Drawing and Data Commitments sheet (Appendix F).

3.3.13 Personnel and Training

Records for the following areas shall be prepared and made available for the Buyer. Review of the qualifications may be subject to a surveillance or source inspection by the Buyer.

3.3.13.1 Welder Qualification

Welder shall be qualified in accordance with ASME B&PV Code, Section IX and AWS D1.1/D1.1M, as applicable. Documentation for personnel performing welding, including tacking, shall be maintained in a Welder Performance Qualification Record.

3.3.13.2 Weld Examination

Welds shall be examined per ASME B31.3 at a minimum for piping and pipe supports and per AWS D1.1/D1.1M for structural steel. An ASME B31.3 weld examiner shall meet the code requirements. Welded connections on the lifting components shall be 100 percent visual and 100 percent Dye-Penetrant Test or Magnetic-Particle Test inspected.

3.3.13.3 Electrical Inspection

The Hanford Site CH2M HILL NEC® Electrical Inspector shall inspect equipment fabricated under this contract that is not NRTL-listed or labeled. All deficiencies found shall be corrected or dispositioned before shipment.

4 QUALITY ASSURANCE REQUIREMENTS

The following subsections provide the minimum QA requirements for this specification.

4.1 GENERAL

The Seller shall document, implement, and maintain a QA Program that identifies the activities and items to which it applies. The QA Program must address each of the areas discussed within this QA requirements flowdown. The Seller must submit the QA Program to the Buyer for review before award of contract.

The Seller shall assess its QA Program regularly to ensure its effective implementation.

The QA Program shall provide for indoctrination and training, as necessary, of personnel performing activities affecting quality to ensure that suitable proficiency is achieved and maintained. Personnel who conduct inspection and test activities shall be qualified to conduct those activities and certification of the qualification must be submitted to the Buyer on request.

4.1.1 Design

The Seller must define, control, and verify designs developed for this contract. Design inputs must be specified and correctly translated into design documents. Design interfaces must be identified and controlled. Persons who did not design the item must be used to verify design adequacy. Design changes, including field changes, must be reviewed and approved by the same personnel who reviewed and approved the initial designs.

4.1.2 Procurement Document Control

Procurement documents must include or reference sufficient quality and technical requirements in order to describe the items and services requested. Procurement documents must be reviewed and approved by the authorized personnel within the Seller's organization, and changes must be reviewed and approved by the same individuals who reviewed and approved the original procurement documents.

The Seller must have a process for accepting procured items. This process must include one or a combination of the following: Certificate of Conformance, source verification, receiving inspection, and post-installation testing.

The Seller shall provide a legible and reproducible CoC. The CoC shall be signed by the Seller's authorized representative responsible for quality assurance.

The CoC shall contain, as a minimum, the following information:

1. Identification of the Buyer's contract or purchase order number under which the materials, equipment, component, or service is being purchased.

2. Provide traceability by means of positive identification from the material, equipment, component, or service to the CoC.

3. Identify the specific procurement requirements met by the material, equipment, component, or service supplied (i.e., codes, standards, or other applicable specification). The procurement requirements shall include any approved changes, waivers, or deviations applicable to the subject materials, equipment, component, or service.

4. Identify any procurement requirements that have not been met, together with an explanation and the means for resolving the nonconformance.

The Seller's certification system, including the procedures to be followed in filling out a certificate and the administrative procedures for review and approval of the certificates, shall be described in the Seller's QA Program.

The certification system shall provide a means to verify the validity of the Seller's certificates.

The Seller is required to flowdown applicable QA requirements based upon a graded approach from this contract to any subtier subcontractor/suppliers. Any access to the subtier subcontractor/suppliers' facilities for verification activities will be requested through the Seller before access, and verification activities may be performed jointly.

The Seller shall warrant that all items furnished under the contract are genuine (i.e., new; not refurbished and/or counterfeit) and match the quality, test reports,

markings, and/or fitness for intended use as required by the contract. Any materials furnished as part of the contract that the government or other duly recognized agency had been previously found to be suspect/counterfeit shall not be used.

All items are subject to inspection at the Seller's facility or lower-tier subcontractor's facility. The Seller shall notify the Buyer, at least seven working days in advance, of the time when such items or activities will reach the Buyer's identified inspection hold points. As a minimum, final inspection before packaging for shipment shall be considered such a hold point, unless specifically waived by the Buyer.

The Seller shall obtain all materials to be delivered under the contract directly from the original manufacturer or an authorized manufacturer's representative. The Seller shall provide legible and reproducible documentation, with the materials, that provides objective evidence that the items were provided by the original manufacturer. Such documentation may include a copy of the purchase order to the manufacturer and shipping documentation or manufacturer invoice (each of which would identify that the materials were obtained from the original manufacturer).

The Seller shall submit, with or prior to item shipment, a recommended spare parts list. The list shall provide the name and address of the original supplier of the replacement part, and the part's drawings, specification, or catalog identity including applicable change or revision information.

The Seller shall grant access to the Seller's facilities and records for inspection or audit by the Buyer, his designated representative, and/or other parties authorized by the Buyer.

4.1.3 Instructions, Procedures, and Drawings

The Seller must document and implement appropriate instructions, procedures, and drawings. Instructions and procedures must include or reference appropriate quantitative or qualitative acceptance criteria for determining that prescribed activities have been satisfactorily accomplished.

4.1.4 Identification and Control of Items

The Seller shall establish controls to ensure that only correct and accepted items are used or installed.

All items shall be identified with the applicable part number, model number, or other identifier prescribed in this specification. Identification shall be on the item or the package containing the item. When the identification is on the item, such marking shall not impair the service of the item or violate dimensional, chemical, or physical requirements.

The Seller shall submit a legible and reproducible copy of the product data sheet (e.g., drawing, catalog cut sheet, brochure) that provides adequate information to enable the Buyer to verify the form and function of the articles procured. One copy of such documentation, unless otherwise specified, shall accompany the item.

The Seller shall identify each item, assembly, package, container, or material, having limited shelf life, with the cure date or date of manufacture and the expiration date. The Seller shall specify any storage temperatures, humidity and environmental conditions that should be maintained. Material shall not be furnished having less than 75 percent of the total shelf life available at the time of shipment.

4.1.5 Control of Processes

The Seller shall have processes to control processes, including special processes that control or verify quality (e.g., welding, heat treating, and NDE). Special processes must be performed by qualified personnel using qualified procedures in accordance with specified requirements.

Seller personnel performing weld inspections shall be certified as a Certified Welding Inspector (CWI) in accordance with the requirements of AWS QC-1. The following documentation shall be submitted for Buyer approval before the start of fabrication:

1. Current AWS CWI certification;

2. Current/valid visual acuity examination (must be given every three years); and

3. Visual weld inspection procedure(s).

Welding procedures and personnel shall be qualified in accordance with applicable AWS or ASME requirements specified in the contract. The Seller shall submit copies of all welding procedures, procedure qualification records, and welder qualification records to be employed. Buyer review and approval of these documents is required before start of fabrication.

Nondestructive examination personnel shall be qualified and certified in accordance with the recommended guidelines of ASNT SNT-TC-1A. The Seller is not authorized to begin fabrication until the following documentation has been approved by the Buyer:

1. NDE personnel qualification and certification procedure;

2. Level I, II, and/or III personnel qualification and certification records, including objective evidence of NDE training, formal education, examination, experience, date of hire, and current visual acuity exam; and

3. NDE method procedure(s) compliant with the applicable requirements of the Buyer's contract.

Nondestructive examination reports and radiographs shall be traceable to the item examined, shall include all essential examination parameters, and shall be signed and dated by a qualified/certified NDE examiner. All NDE reports and radiographs shall accompany or preceded shipment of the item or component. Radiographs and radiographic technique and examination reports shall be subject to approval by the Buyer before shipment.

These requirements shall be passed to lower-tier subcontractors.

4.1.6 Verification and Verification Methods

The Seller shall have a process to plan and execute inspections to verify conformance of an item or activity to specified requirements. The process shall document the characteristics to be inspected and inspection methods to be employed. The Seller shall document the results of inspections. Inspections for acceptance shall be performed by persons other than those who performed or directly supervised the work being inspected.

The Seller shall submit, as required by the contract, legible, reproducible copies of inspection and/or test reports. The reports shall include, as a minimum, the following information:

1. Identification of applicable inspection and/or test procedure;

2. Resulting data for all characteristics evaluated, as required by inspection or test procedures, including reference to information on action taken in connection with nonconformances;

3. Traceability to the item inspected/tested (e.g., serial number, part number, lot number), date of inspection, name of inspector, type of observation; and

4. Signature of the Seller's authorized representative or agency performing the inspection or test.

4.1.7 Test Control

The Seller shall have a process (to plan and execute tests) to verify conformance of an item or activity to specified requirements. The process shall document the characteristics to be tested and test methods to be employed. Tests required to collect data, such as for siting or design input; shall be evaluated.

The Seller shall prepare a detailed test plan. Before starting work, the plan shall be submitted to the Buyer for approval and insertion of Buyer's designated source inspection and witness notification points. The test plan shall provide the following, at a minimum:

1. Traceability to the Buyer's purchase/contract order document number;

2. Name or description of the item to be tested (e.g., components, assemblies, subassemblies);

3. Method/procedure to be used during test; and

4. Subsequent revisions/modifications to the test plan require review and approval by the Buyer before implementation of the changes.

The Seller shall provide test reports that include, as a minimum:

1. Item tested,
2. Date of test,
3. Tester or data recorder,
4. Type of observation,
5. Results and acceptability,
6. Action taken in connection with any deviations noted, and
7. Person evaluating test results.

Test plans and test reports must be submitted to the Buyer for the project records.

4.1.8 Control of Measuring and Test Equipment

The Seller shall control tools, gauges, instruments, and other measuring and testing equipment used for activities affecting quality, and shall calibrate at specified periods and adjust to maintain accuracy within necessary limits.

The Seller shall maintain legible, reproducible copies of the Certificates of Calibration, traceable to the NIST. Each Certificate of Calibration shall be signed by the Seller's representative responsible for calibration, attesting to its authenticity, and shall be identified with the following information:

1. Buyer's contract number,
2. Identification of the article to which the Certificate of Calibration applies, and
3. Standards used for calibration.

In addition, the Seller shall submit a report of actual calibration results. The report shall be identifiable to the acceptance criteria of the items submitted and shall meet the contract requirements. The report shall contain the signature of the authorized representative of the agency verifying compliance. One copy of the documentation, unless otherwise specified, shall accompany the applicable item(s) shipped.

4.1.9 Handling, Storage, and Shipping

The Seller shall prepare and submit for Buyer review and approval, before use, procedure(s) or plan(s) for the packaging and shipping of materials, equipment, or components to be furnished under the contract. The procedure(s) or plan(s) shall include, as appropriate, cleanliness inspection before packaging, use of preservatives and coatings, descriptions of specially designed shipping containers, handling and rigging data, final inspections, and the type of transfer and shipping vehicles.

4.1.10 Inspection, Test, and Operating Status

The Seller shall have a process to identify the status of inspection and test activities on items or in documents traceable to the items, and to ensure that items which have not passed the required inspections and tests are not inadvertently installed, used, or operated. Status shall be maintained through indicators (i.e., physical location) and tags, markings, shop travelers, stamps, inspection records, or other suitable means. The Seller must specify the authority for application and removal of tags, markings, labels, and stamps.

4.1.11 Control of Nonconforming Items

The Seller must have a process to control items that do not conform to specified requirements to prevent inadvertent installation or use. These controls must provide for identification, documentation, evaluation, segregation (when practical), and disposition of nonconforming items, and for notification to affected organizations.

All nonconforming conditions identified at the Seller's facility, with a proposed disposition of "Accept-As-Is" or "Repair," as defined below, shall be approved by the Buyer before supplier implementation of the nonconformance report (NCR) disposition:

1. Accept-As-Is: Nonconforming materials will perform its intended function.

2. Repair: Nonconforming item can be corrected so that its characteristics meet requirements of the contract.

Nonconforming items identified as "Repair" or "Rework" shall be re-examined in accordance with applicable procedures and with the original acceptance criteria, unless the nonconforming item disposition has established alternate acceptance criteria.

Nonconformances shall be documented by the Seller on their own nonconformance form or one provided by the Buyer. After documenting the nonconformance and providing a proposed disposition and technical justification, the report shall be submitted to the Buyer.

After the proposed disposition has been evaluated, and approved or rejected by the Buyer, the form shall be returned to the Seller. Corrective action may only take place after Buyer approval. Copies of completed, Buyer-approved, NCRs shall be shipped to the Buyer with the affected item.

4.1.12 Corrective Action

The Seller shall have a process to promptly identify conditions adverse to quality, and to correct them as soon as practical. The identification, cause, and corrective action for conditions adverse to quality shall be documented and reported to appropriate levels of management. Follow-up action shall be taken to verify implementation of this corrective action.

During the period of performance of work for this contract, the Seller shall provide, to the Buyer, copies of all documents that constitute reports of conditions adverse to quality (e.g., deficiencies, weaknesses, nonconformances, or noncompliances with established requirements) related to items or services provided to the Buyer.

4.1.13 Quality Assurance Records

The Seller shall have a process to specify, prepare, and maintain records that furnish documentary evidence of quality. Records shall be legible, identifiable, retrievable, and protected against damage, deterioration, or loss. The process shall establish and document responsibilities and requirements for records transmittal, distribution, retention, maintenance, and disposition.

4.1.14 Control of Graded Fasteners

The following are minimum requirements for high strength graded fasteners produced in compliance with national consensus standards (i.e., SAE, ASTM, ASME):

1. Fasteners shall exhibit grade marks and manufacturers identification symbols (headmarks) as required in the specifications referenced in the contract.

2. When requested by the Buyer, the Seller shall provide legible and reproducible copies of the manufacturers Certified Material Test Reports (CMTR). These CMTRs shall report the values of the actual chemical and physical tests performed on the represented fastener lot and material heat. Fastener packaging and labeling shall be traceable by lot number or other means to the CMTR.

3. Fasteners shall be inspected and documented to verify compliance with this QA Clause. Additionally, fasteners may also be subject to destructive testing by the Buyer to verify compliance.

4.2 INSPECTIONS AND TESTS

Each component, instrument, sensor, and valve shall be tested to verify that it is functional. In order to complete these functional check-out tests, the Seller will have to provide temporary power and switches for each valve activation and component activation circuit in the system. Compressed air or bottled nitrogen is also required for pneumatically-actuated valves. All electrical devices shall be tested from the skid junction box to the end device and all instrumentation shall be tested from the skid junction box termination.

Dated calibration labels shall be visible on all test equipment. Measuring and test equipment used for acceptance inspections and tests shall be controlled in accordance with the Seller's QA Program and shall be traceable to a national measurement standard.

4.2.1 Electrical Testing

The following sections detail the requirements for electrical testing.

4.2.1.1 Motor Test

All motors shall be given a routine test to demonstrate that the motors are installed correctly and free from mechanical and electrical defects. Motor tests shall be performed in accordance with the Seller's standard practice. Tests shall include but are not limited to:

1. Motors shall be designed and tested by the manufacturer. Certificates of Conformance and/or certified test results shall be supplied for the following tests:

    a. Rated load readings of current, power, and speed at rated voltage and frequencies;

    b. No load readings of current, power, and speed at rated voltage and frequencies;

    c. Mechanical vibration and motor balance test results in accordance with NEMA MG 1-12.06;

    d. High potential test results in accordance with NEMA MG 1-12.03; and

    e. 1000V dc Megger test for one minute, phase to ground.

2. Motors shall be checked for correct rotation and incoming power terminals shall be labeled by phase for proper rotation.

4.2.1.2 Wiring and Breaker Test

All wiring and breakers shall be given routine tests to demonstrate that they are free from mechanical and electrical defects. Wiring and breaker tests shall be

performed in accordance with the Seller's standard practice. The Seller shall provide wiring and breakers test data that include, but are not limited to:

1. Megger tests are required for all electrical power wiring;

2. Continuity testing is required for all electrical power and instrumentation wiring; and

3. Circuit breakers are to be inspected for proper size, correct installation, manual operation of handles, and suspect/counterfeit parts.

4.2.1.3 Instrumentation Testing

Each instrument will be tested for proper operation. This may require applying temporary power, a 4-20-mA loop with indicators, or other methods to verify proper indication and function. All signals that are fed to the termination panel shall be verified at the termination panel. The device should be tested with fluid to physically activate the devices for detecting level, pressure, flow, etc., as applicable.

For control loops provided by the MCS, no testing will be required except the individual sensors/switches and starters. Example: A level switch feeds the Programmable Logic Controller which controls the feed pump. The level switch shall be tested, but the shutdown signal to the pump can not be verified without the MCS hardware and program, provided later.

For local control function, the system shall be provided with the normal fluid, where practical, to operationally test the control loop. Example: Level interlock to the feed pump shutdown will be tested by filling the tank above the level switch position and verifying the pump shuts down.

The Seller shall prepare a log of instruments tested by a certified-Electrical Inspector. All testing performed shall be reported to the Buyer in a factory acceptance report.

4.2.2 Remote Operated Valve Tests

Verify remote operated valves cycle through an open and close cycle and achieve their specified fail position on loss of compressed air or loss of electric

power. Times from open to closed, and closed to open shall be recorded and provided to the Buyer.

Each valve shall be activated to verify that the valve functions and that valve-position-switch-contacts are properly made (using an ohmmeter). The valve shall be activated from the skid junction box and verify limit-switch-contacts change state at the skid junction box. The Seller shall make a checklist that indicates all contacts checked. The Valve-Test Checklist shall be submitted to the Buyer for review and approval. The checklist shall include all contacts where application of voltage would fire a solenoid, actuate an air-operated valve, and change positions between switch contacts.

4.2.3 Pressure Leak Test

The wet scrubber skid assembly piping and components shall be pressure-leak tested to 1.25 times the maximum operating pressure of the system (negative and positive.). Water used for hydrostatic testing shall be tested for chlorides before use. The chloride content of the test medium shall not exceed 250 ppm for water temperatures of 149 °F or less.

Results shall be recorded and shall be submitted to the Buyer with test records/documents.

4.2.4 Wet Scrubber System Testing

The tests (below) may be performed concurrently as practicable.

4.2.4.1 Wet Scrubber Air Stream Housing Testing

The housing assemblies, including inlet and outlet transitions and ductwork, shall be visually inspected in accordance with the requirements of ASME AG-1 (as identified in Appendix B) . Observed deficiencies shall be documented on the inspection checklist and as a NCR if needed. A corrective action shall be noted and re-inspection results documented on the inspection checklist and on the NCR disposition. The Seller shall submit NCRs, as applicable, to the Buyer in accordance with the Bidder's Drawing and Data Commitments sheet (Appendix F).

4.2.4.2 Scrubber System Structural Capability Tests

The wet scrubber ductwork and housings and complete assemblies, shall have a structural integrity test performed under vacuum. The structural integrity test shall be conducted in compliance with ASME AG-1 as identified in Appendix B.

4.2.4.3 Ductwork and Housing Leak Tests

Perform ductwork and housing leakage testing after the Structural Capability Test has been successfully completed. Leakage testing shall be in accordance with ASME AG-1 as identified in Appendix B. Allowable leakage rate of duct and housing sections shall be determined in accordance with ASME AG-1 as identified in Appendix B. Maximum allowable leakage shall be in accordance with ASME AG-1 as identified in Appendix B.

A Buyer's representative may be present to witness the decay leak test of the housings. The Seller shall give a minimum of five days advance notice before performing the test(s).

4.2.4.4 Alarm Check

This check will verify that switches perform as required to specific set-point conditions.

4.2.4.5 Caustic System Check

This check will verify that the caustic circulation pump functions properly. This will also perform a capacity check of the pump to verify the pump is operating within the limits of its pump curve.

4.2.5 Secondary Containment Leak Test

The Secondary containment pan shall be static leak tested by filling the secondary containment system with water to the calculated fill level and left standing for a period of 24 hours. No visible drop in water level or other signs of leakage shall be evident. Equipment, wiring, insulation, or other materials that may be damaged by the water shall be removed before the test or protected from damage.

4.2.6 Lift Tests

The fully assembled wet scrubber skid assembly shall be lifted from a horizontal position without incurring any damage. The lifting points shall be shown to account for the offset loads, such that the skid assembly hangs with its vertical axis within ten degrees of vertical. All lifting accessories or components shall be load tested to 125 percent of the rated load capacity.

Verify the weight and center of gravity of the overall assembly.

5 PRESERVATION AND DELIVERY

The following subsections provide the minimum requirements for packaging, labeling, handling, shipping, and receiving.

5.1 GENERAL

Every item that is shipped shall arrive at the jobsite in the same condition when it passed all quality control inspections and tests.

The equipment shall be prepared for delivery to the Buyer's specified site located near the U.S. Department of Energy's Hanford Site in Richland, Washington in a manner that can easily be inspected by the Buyer's personnel. The Seller shall be responsible for the equipment and associated components provided by the Seller through shipping and receiving of the equipment. The Seller shall be responsible for any damage that occurred during shipping.

The equipment will remain the property of the Seller until the Buyer has completed a receipt inspection at the Buyer's facility.

5.1.1 Packaging and Shipping Instruction Manual

The Seller shall prepare an instruction manual(s) that includes packaging information, handling information, shipping information, storage information, operational procedures, maintenance procedures, and special assembly procedures. The instruction manual(s) shall be submitted to the Buyer for approval before shipment.

A recommended spare parts list shall be prepared and provided to the Buyer.

5.1.2 Operation and Maintenance Manual

Provide an Operation and Maintenance Manual containing all information and procedures necessary to operate and maintain the assembled system. Component manuals and other vendor data such as the following shall be provided, as applicable:

1. One-line diagram, layout drawings, schematic and wiring diagrams;

2. Illustrated parts lists with manufacturer catalog numbers;

3. Certified copy of factory test results;

4. Recommended maintenance schedule;

5. Maintenance procedures; and

6. Operating procedures.

Submit Operation and Maintenance Manual, component manuals, and other vendor data to the Buyer for approval before shipment.

5.2 PRESERVATION AND PACKAGING

Before packaging, all residual water present in the systems from acceptance testing shall be thoroughly drained and dried by purging oil-free dry air through the system. All open pipe ends shall be sealed to prevent ingress of debris and vermin into the system. The assembly shall be thoroughly cleaned to remove any dirt or dust that may have accumulated on the equipment during testing. Defects in the paint shall be touched-up. Moving parts shall be secured to prevent movement during shipping.

5.3 PACKING

1. The Seller shall package equipment to protect items during shipping. Bracing structures shall be installed where items could be damaged or vibrate loose during transportation. All bracing must be clearly identified, both in the packaging instruction and by labeling on the outside of the receipt tanks.

2. Rigging sketches or a handling procedure shall be prepared by the Seller for items that require special handling. These sketches will identify weights, sling locations, balance points, methods of attachment, and other information necessary for safe handling.

3. Packaging or preservative coatings shall be visually inspected after loading. Damaged areas shall be repaired. Items shipped with desiccants shall be inspected after loading to verify that seals are intact.

4. Cushioning shall be used where protection from shock and vibration is required. Cushioning materials shall have sufficient strength to provide the

required protection, shall exhibit no corrosive effect when in contact with the item being cushioned, and shall not readily support combustion.

5. Temporary cushioning, blocking, bracing, or anchoring placed within an item for shipping protection that shall be removed before operation of the item, shall be identified by a warning(s) placed in a conspicuous manner to effect proper removal of the packing material.

6. Blocking and bracing used for protection of the load shall prevent item movement and withstand thrust and impact applied in any direction. Blocking and bracing used in direct contact with the item being blocked shall not have a corrosive effect on the item.

7. The weight, lifting points, or center of gravity indicated on the crate, skid, or package of major components shall be used to ensure proper handling during loading.

8. Written instructions covering the location and stacking limits of the crates or boxes on the transport vehicle shall be specified, as appropriate. These instructions should be marked on the container.

9. Precautions shall be taken to minimize marring of the finish of painted surfaces during handling and shipping, as practicable.

10. Cables, slings, chain falls, etc., shall not be placed where they can cause damage to any component part. Mating surfaces, machined areas, etc., shall be avoided.

11. All items shall be protected from the deleterious effects of shock, vibration, physical damage, moisture, salt spray, condensation, and weather during shipping, as applicable.

12. Items shall be inspected for cleanliness before packaging. Dirt, oil, residue, metal chips, or other forms of contamination shall be removed in accordance with Section 3.3.4. Any entrapped water shall be removed.

13. All openings into items shall be capped, plugged, and sealed with materials which perform their intended function without causing deleterious effects on the equipment or its operation.

14. Nonmetallic plugs and caps shall be brightly colored. Clear plastic caps or plugs are not to be used except when specified.

15. Plugs or caps shall be prevented from falling into, or being pushed into, openings after installation and shall be secured to prevent accidental removal.

16. Items subject to corrosion, either internal or external, shall be suitably protected.

17. Items packed in containers shall be blocked, braced, or cushioned to prevent physical damage.

18. Instrumentation, electrical and electronic equipment, motors, and other electrical assemblies and equipment shall be packaged in a waterproof enclosure. This may be the enclosure the item will operate in. For items without waterproof enclosures, a vapor barrier shall be placed around the enclosure. In either case, the enclosure shall be able to exclude dirt and facilitate handling and marking of the item. Barrier materials shall be nonhalogenated if used in contact with austenitic stainless steels, shall be noncorrosive, shall not readily support combustion, and shall not be, otherwise harmful to the item being packaged. Desiccants may be used inside the enclosure or vapor barrier.

19. "Anchoring" of the item within a crate or on a skid means to adequately fasten the item during shipment and protect the item from potential damage as a result of rough handling. Bolting is preferred. When bolts are used for anchoring, the following criteria shall apply:

    a. If precision holes in the item are used for anchoring, properly fitting bolts shall be used to prevent marring or elongation of the holes.

    b. Items shall be marked to preserve identity during shipping, receiving, and storage per the following requirements:

        i. Identification shall be stamped, etched, stenciled, or otherwise marked on the item or on tags affixed to the item.

        ii. The marking shall not be deleterious to the material nor violate any other section of this specification.

iii. When tags are employed, they shall be of material that will retain the marking and withstand weathering deterioration and other normal shipping and handling effects.

20. Items not specifically covered by these requirements shall be handled in accordance with sound material handling practices.

5.4 MARKING

Packages shall be properly and clearly marked. At a minimum, the required information shall include the contract number, the name and equipment number of the item within the package, the actual weight of the package and its contents, and the orientation of the equipment within the crate. Each package shall be labeled as part of the entire shipment, such as "Crate 1 of 2."

5.5 HANDLING

The Seller shall lift equipment using a forklift or crane, using the lifting points designed for that purpose.

5.6 SHIPPING

The Seller's truck driver shall carry bills of lading for each shippable unit that is delivered to the Buyer.

The Seller shall obtain approval to ship from the Buyer before the equipment is prepared for shipment.

5.7 RECEIVING

The Buyer's agent will perform a receipt inspection on receipt of the equipment at the Buyer's specified site.

This receipt inspection shall consist of the following:

1. Verify all parts are present and not damaged during shipping.

2. Documentation review—determine that documentation required by contract to accompany equipment is present and traceable to the equipment

shipped as required by the Bidder's Drawing and Data Commitments sheet (Appendix F).

The Seller is responsible for accommodating the receipt inspection process by:

1. Designing and using packaging that allows for easy opening or disassembly to reveal the item(s) for inspection, then reclosing to permit the same packaging to be used for post-receipt transportation on the Hanford Site.

2. Selecting locations on equipment for identification numbers that promotes easy identification without extensive disassembly of packaging materials. It is preferred that packaging be marked to indicate the approximate position of identification numbers on equipment within the packaging.

3. Ensuring that all required documentation accompanying the equipment is present and obvious on, or within, the packaging.

6 NOTES

1. Unless otherwise specified, equipment furnished under this section shall be fabricated and installed in compliance with the instructions of the manufacturer.

2. The Seller shall ensure that all equipment, accessories, and installation materials comply with the specification and that adequate provision is made in the skid assembly design and fabrication for mounting the specified system equipment and accessories.

3. The Seller is solely responsible for construction means, methods, techniques, sequences, procedures, and safety precautions and programs.

4. The Seller shall provide all labor, equipment, and material required to provide a complete and functional system.

5. To avoid delays in construction, the Seller shall ensure that all components of the system are available to meet the required schedule.

6. The Seller shall obtain necessary permits, arrange for inspections, and obtain approval of the appropriate Seller's local "Authority Having Jurisdiction" over the work described.

7 APPENDICES

The following appendices make up part of this specification:

Appendices	Description
A	Drawings and Sketches
B	ASME AG-1 Compliance Requirements
C	Example Data Sheets
D	TFC-ESHQ-Q_C-C-03, Revision C-2, *Control of Suspect/Counterfeit Items*
E	Request for Information
F	Bidder's Drawing and Data Commitments
G	Instrumentation Naming and Tagging Convention

DMJM technology

amec

TECHNICAL SPECIFICATION

PROJECT:	**Final DBVS Design**	**145579-D-SP-037**	**REV. 1**
PROJECT NO.:	**145579**	**WET SCRUBBER SKID ASSEMBLY DESIGN AND FABRICATION**	
CLIENT:	**AMEC E&E - Richland, Washington**		

Appendix A

Drawings and Sketches

Drawing or Sketch	Revision	Sheet	Title
F-145579-00-A-0099	I	1	Bulk Vitrification P&ID "Typicals" Legend
F-145579-00-A-0100	N	1	Bulk Vitrification P&ID Symbol Legend
F-145579-00-E-0107	C	1	Bulk Vitrification Off-Gas Caustic Pump Schematic Diagram
F-145579-00-E-0107	C	2	Bulk Vitrification Off-Gas Caustic Pump Wiring Diagram
F-145579-00-E-0108	C	1	Bulk Vitrification Off-Gas Caustic Mixer Schematic Diagram
F-145579-00-E-0108	C	2	Bulk Vitrification Off-Gas Caustic Mixer Wiring Diagram
F-145579-00-E-0111	C	1	Bulk Vitrification Scrubber TK Pump No. 1 Schematic Diagram
F-145579-00-E-0111	C	2	Bulk Vitrification Scrubber TK Pump No. 1 Wiring Diagram
F-145579-00-E-0179	C	1	Bulk Vitrification Off-Gas HEPA Heater Schem/Wiring Diagram
F-145579-36-A-0100	L	1	Bulk Vitrification Wet Scrubber Skid No. 1 P&ID
F-145579-36-A-0102	L	1	Bulk Vitrification Off-Gas Trailer Scurbber Filter P&ID
H-14-106796	0	1	Bulk Vitrification Off-Gas Area FDNS – Plans & Sections
DBVS-SK-E104	E	1	DBVS Scrubber Skid One-Line & Grounding Diagram
DBVS-SK-M103	B	1	Bulk Vitrification HIHTL Penetration Details
			Total Drawing Pages including cover: 15

P&ID INTERLOCK LEGEND:

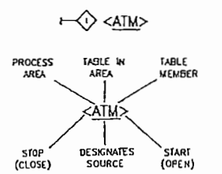

A = PROCESS AREA

AXX = AREA 00: PROCESS/FACILITY SUPPORT
BXX = AREA 31: SOIL RECEIPT
CXX = AREA 32: WASTE RECEIPT
DXX = AREA 33: DRYER
EXX = AREA 34: DRYER TO BOX
FXX = AREA 35: BOX (ICV)
GXX = AREA 36: OFF GAS TREATMENT
HXX = AREA 37: SECONDARY LIQUID WASTE

T = TABLE WITHIN AN AREA

XAX, XBX, XCX ..... etc.

M = MEMBER WITHIN A TABLE
(MAXIMUM 26 MEMBERS)

XXA, XXB, XXC ..... etc.

SEE 145579-F-DC-004 "NCS INTERLOCK REGISTER" FOR FURTHER DETAILS.

SEQUENCE CONTROLLER LEGEND

SEQUENCE CONTROLLERS USE A DIFFERENT METHOD OF IDENTIFYING INTERACTION WITH FIELD CHOICES:

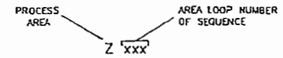

eg. THIS SEQUENCE CONTROLLER

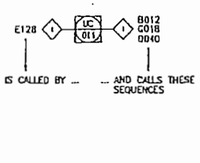

eg. THIS VALVE IS ACTUATED BY SEQUENCE CONTROLER D040 (33-UC-040)

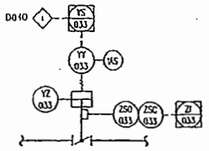

AREA SEQUENCE CONTROLLERS

AREA 31
CLEAN SOIL AIRLOCK SEQUENCE:
B012 = 31-UC-012
ZrO2 AIRLOCK SEQUENCE:
B512 = 31-UC-512
B203 AIRLOCK SEQUENCE:
B612 = 31-UC-612

AREA 32
WASTE RECEIPT VALVE SEQUENCE:
C016 = 32-UC-016

AREA 33
WASTE DRYER BATCH SEQUENCE:
D011 = 33-UC-011
WASTE DRYER DISCHARGE SEQUENCE:
D040 = 33-UC-040

AREA 34
RF UNIT 088 AIRLOCK SEQUENCE:
E031 = 34-UC-031
RF UNIT 089 AIRLOCK SEQUENCE:
E032 = 34-UC-032
ICV CAMPAIGN SEQUENCE:
E128 = 34-UC-128
TOP-OFF SOIL AIRLOCK 035 SEQUENCE:
E207 = 34-UC-207
TOP-OFF SOIL AIRLOCK 036 SEQUENCE:
E208 = 34-UC-208
TOP-OFF SOIL AIRLOCK 037 SEQUENCE:
E209 = 34-UC-209

AREA 35
ICV BOX ELECTRODE POWER CONTROLLER:
F110 = 35-UC-110

AREA 36
OGTS DUST FEED SEQUENCE:
G018 = 36-UC-018
EXHAUST FAN EMERGENCY SEQUENCE:
G531 = 36-UC-531

LIST OF ABBREVIATIONS FOR 'FLUID NOMENCLATURE' FINAL DBVS

AIR:
AA AMBIENT AIR
AC COMPRESSED AIR
AI INSTRUMENT AIR

DRY SOLID:
DBO BORON OXIDE
DCS CLEAN SOIL
DDW DRIED WASTE
DGF GLASS FORMER
DZO ZIRCONIUM OXIDE

GAS:
GAM AMMONIA GAS

OIL/GREASE:
ODF OIL-DIESEL FUEL
OH OIL-HYDRAULICS

PROCESS SOLUTION:
PDC DRYER CONDENSATE
PLS LIQUID SOLUTANT
PLW LOW ACTIVITY WASTE
PSS SCRUB SOLUTION
PSW SECONDARY WASTE
PTS TRI-MER SOLUTION

REAGENT:
RAM AMMONIA LIQUID
RAS SULPHURIC ACID
RNH CAUSTIC (NaOH)
RNP SODIUM PERCHLORATE (NaClO2)
RNS SODIUM SULPHIDE

VACUUM, VAPOUR AND VENT LINES:
VCS CLEAN SOIL VENT LINE
VOG OFF GAS VENT LINE
VAC VACUUM LINE
VVP VAPOUR LINE

WATER/STEAM:
STC STEAM CONDENSATE
STM STEAM
WBD BOILER BLOWDOWN WATER
WBF BOILER FEEDWATER
WC CHILLER WATER
WED EQUIPMENT DRAIN
WF FILTERED WATER
WFI FIRE WATER
WG GLYCOL
WGL GLAND WATER
WPO POTABLE WATER

NOTE:
1. THE FIRST LETTER IN THE LINE ABBREVIATION SHALL DESIGNATE THE FLUID CATEGORY, THE REMAINING LETTERS SHALL DESIGNATE THE FLUID.

In making requests for transmittal of data by any electronic media, the Company receiving such data agrees that AMEC Americas Limited cannot be held responsible for users of the data outside of or beyond the scope of our original agreement. Also, because data stored in electronic media or transmitted by electronic means can deteriorate undetected or be modified without the consultant's knowledge, the Company receiving data agrees that AMEC Americas Limited cannot be held liable for the compatibility, completeness or correctness of the data.

TYPICAL #05
ISO TRAILER
SPACE HEATER

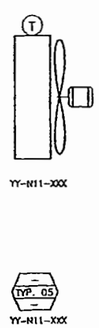

TYPICAL #06
ISO TRAILER
AIR CONDITIONING

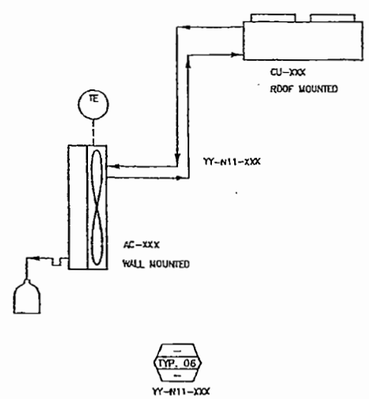

TYPICAL SYMBOL FOR LEGEND

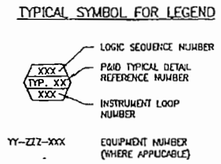

Rev.	REVISION DESCRIPTION	Date	By	Chk'd	Approved Proj Eng	Approved Proj Mgr
I	ISSUED FOR REVISION & SCE REPORT	26 MAY 05	AA	BM	FWS	FS
H	ISSUED FOR REVISION & SCE REPORT	24 MAR 05	AA	PCF	KS/FS	TH
G	ISSUED FOR APPROVAL & SCE REPORT	29 JAN 05	AA	BM	FWS	TH
F	ISSUED FOR CHCM HALL REVIEW	29 DEC. 04	AA	BM	FWS	TH
E	ISSUED FOR GENERAL UPDATES & INFORMATION	03 NOV 04	AA	BM	FWS	TH
D	ISSUED FOR VENDOR INFORMATION	8 Oct 04	MY	CCH	FWS	JDS
C	ISSUED FOR APPROVAL	27 AUG 04	RDB	CCH	FWS	TH
B	INTERNAL ISSUED FOR INFORMATION DRAWING NUMBER REVISED, WAS F-143643-00-A-0099 rA	23 JUL 04	JSM	CCH	FWS	JDS
A	ISSUED FOR TASK 6 REPORT	7 APR 04	RDB	CCH	FWS	TH

AMEC DRAWING NO: F-145579-00-A-0099 — REV: I

amec

AMEC PROJECT: 145579-FINAL DBVS DESIGN

U.S. DEPARTMENT OF ENERGY
Office of River Protection

BULK VITRIFICATION
P&ID
"TYPICALS" LEGEND

NAME	DATE	SIGNATURE
DRAWN BY		
TECHNICAL BY		
CHECKED BY		
DESIGN / ANALYSIS		
DISCIPLINE MANAGER		
PROJECT MANAGER		
PROJECT AUTHORITY		

SIZE: F — AMEC NO — PROJ NO — DWG NO — REV

SCALE — SHEET — OF

DWG NO	TITLE
-	-

DRAWING TRACEABILITY LIST

REF NUMBER	TITLE
-	-

REFERENCES — NEXT USED ON

REV NO	DATE	DESCRIPTION	REV BY	REV CHK'D	CHECKED BY	DATE	APPROVED
-	-	-	-	-	-	-	-

REVISIONS

EQUIPMENT

- CENTRIFUGAL PUMP
- METERING PUMP
- DIAPHRAGM PUMP
- PORTABLE SUMP PUMP
- DUAL BASKET STRAINER
- EXHAUST FAN
- MIXER/DRYER
- CONDENSER
- STORAGE BIN
- SELECTIVE CATALYTIC REDUCTION BED
- MIST ELIMINATOR
- VACUUM PUMP
- AIR COMPRESSOR
- SEALED TANK
- VENTURI SCRUBBER
- CAMERA
- HEPA FILTER
- HEATER
- MOTOR
- FILTER OR
- HYDRAULIC OIL FILTER
- VACUUM FILTER
- DOUBLE WALL TANK
- QUENCHER/SPRAY TOWER

EQUIPMENT (CONT'D)

- VANE SEPARATOR
- ELECTRIC HOIST OR WINCH
- SINTERED METAL FILTER OR RECOVER FILTER
- HYDRAULIC MOTOR
- HYDRAULIC PUMP
- LOAD CELL
- MIXER/AGITATOR
- CARTRIDGE FILTER
- COMPRESSED AIR BLOWER
- HEAT EXCHANGER
- AIR DRYER
- FLEX CHUTE
- VAPORIZER
- HEAT EXCHANGER/ VAPORIZER
- IMMERSION HEATER
- RADIATION SAMPLE COUPON

VALVE TYPES:

- GATE
- GLOBE
- CHECK
- BALL
- BUTTERFLY VALVE
- 3-WAY BALL
- PRESSURE REDUCING REGULATOR
- BACKPRESSURE REGULATOR
- CONTROL VALVE
- DISCRETE VALVE
- ANGLE VALVE (90°)
- PRESSURE RELIEF VALVE (PRV)
- INSTRUMENT PLUG VALVE
- 4-WAY ANGLE
- 3-WAY ANGLE
- PRESSURE RELIEF (PRV)
- SPHERICAL DISK VALVE
- STAR/ROTARY
- NEEDLE VALVE
- TURBINE TYPE FLOW ELEMENT
- DIVERGENCE VALVE (BY-PASS)
- DIVERGENCE VALVE (SINGLE) — DVS
- HAND KNIFE GATE
- EXTENSION HANDLE

ACTUATORS:

- S — SOLENOID
- CYLINDER (DISCRETE)
- DIAPHRAGM (ANALOG)
- A — AIR
- M — MOTOR
- VFD — VARIABLE FREQUENCY DRIVE

HVAC SYMBOLS

- AIR OPERATED DAMPER
- MANUAL OPERATED DAMPER
- M — MOTOR OPERATED DAMPER
- BACKDRAFT DAMPER

MEASURING ELEMENTS:

- FG — FLOW SIGHT GLASS
- LG — LEVEL SIGHT GLASS
- FI — FLOW INDICATOR (ROTAMETER)
- FIV — FLOW INDICATOR VALVED (ROTAMETER WITH ATTACHED VALVE)
- TE — TEMPERATURE ELEMENT (PENETRATION)
- TE — TEMPERATURE ELEMENT (SURFACE MOUNT)
- FCV — FLOW CONTROL VALVE
- FS — FLOW SWITCH

MANUAL VALVE NOMENCLATURE

32-V-012
- SEQUENTIAL NUMBER
- PROCESS VALVE
- PROCESS AREA

32-V8-012B (USED IN "TYPICALS")
- SEQUENTIAL COMPONENT LOOP
- INSTRUMENT LOOP NUMBER
- INSTRUMENT BLOCK VALVE
- PROCESS AREA

LINE NOMENCLATURE

FOR FLUID DEFINITIONS SEE DWG F-145579-00-A-0099

4-STC-33-0152
- NOMINAL LINE SIZE (INCHES)
- FLUID ABBREVIATION
- AREA WHERE LINE ORIGINATES
- SEQUENTIAL NUMBER

NOTATIONS:

NNF	NORMALLY NO FLOW
LO	LOCKED OPEN
LC	LOCKED CLOSED
AOV	AIR OPERATED VALVE
BB	BLOCK & BLEED
CA	COMPRESSED AIR
FC	FAIL CLOSED
FO	FAIL OPEN
FL	FAIL LAST
MOV	MOTOR OPERATED VALVE
NC	NORMALLY CLOSED
NO	NORMALLY OPEN
SOV	SOLENOID OPERATED VALVE
V	HAND VALVE
FW	FLUSH WATER
RCFD	REPLACEABLE CORE FILTER DRYER
THC	TOTAL HYDRO CARBONS
ORP	OXIDATION REDUCTION POTENTIAL ANALYZER

LINE TYPES:

- MAJOR PROCESS LINE
- MINOR PROCESS LINE
- CAPILLARY LINE
- AREA CROSS OVER LINE
- PNEUMATIC INSTRUMENT SIGNAL
- EXISTING DELETED
- ELECTRICAL POWER OR SIGNAL
- HEAT TRACED
- INSULATION
- DOUBLE CONTAINED
- 212° — ELECTRIC HEAT TRACED OR INSULATED LINE @ TEMPERATURE
- PNEUMATIC CONVEYANCE BOOST LINES
- FP — ELECTRIC HEAT TRACED (FREEZE PROTECTION, INSULATED)
- HIH — HOSE IN HOSE CONTAINMENT LINE (HEAT TRACED, INSULATED)
- SKID BOUNDARY
- CONTROL (LOGIC) SIGNAL
- LINE INSULATED FOR PERSONNEL PROTECTION OR STD. INSULATION. SEE ISOMETRIC DRAWING FOR EXTENT OF INSULATION
- SHIELD WALL

MISCELLANEOUS SYMBOLS:

- X — PROCESS STREAM LABEL
- FLANGED CONNECTION
- SPRAY NOZZLE
- TD — THERMO DISPERSION FLOW METER
- ANNUBAR
- SAMPLE C/W BOTTLE
- VORTEX SHEDDING FLOW ELEMENT
- MT — MOISTURE TRAP
- T — STEAM TRAP
- TR-XXX — LIQUID TRAP
- EXPANSION JOINT
- QUICK DISCONNECT
- M — MAG FLOW METER ELEMENT
- QUICK DISCONNECT WITH INTERNAL CHECK
- C — CORIOLIS MASS FLOW ELEMENT
- ALARM LIGHT
- SLIDING JOINT
- TDV — TRIPLE DUTY VALVE
- STRAINER
- REDUCER (SIZE DEFINED ON P&ID)
- DIAPHRAGM SEAL
- BACK FLOW PREVENTER C/W EQUIP. NO.
- FLEX HOSE
- RSE — RADIATION SENSING ELEMENT
- ALARM HORN
- RUPTURE DISK (PRESSURE RELIEF)
- FLOW ORIFICE
- CARBOY OR CONTAINER
- CONTAINED – PIPE CONNECTION PORT
- PIPING OR EQUIPMENT BOUNDARY MARKERS
- IAS — INSTRUMENT AIR SUPPLY

INSTRUMENT IDENTIFICATION:

In making requests for transmittal of data by any electronic media, the Company receiving such data agrees that AMEC Americas Limited cannot be held responsible for errors of the data outside of or beyond the scope of our original agreement, also, because data stored in electronic media or transmitted by electronic means can deteriorate undetected or be modified without the consultant's knowledge, the Company receiving data agrees that AMEC Americas Limited cannot be held liable for the compatibility, completeness or correctness of the data.

- CURRENT MCS TEXT
- CASS XXXX — CASS OCTAL NUMBER
- ASSOCIATED EQUIPMENT NO. — XX XXX
- INSTRUMENT ISA IDENTIFICATION
- MCS SHARED CONTROL OR DISPLAY
- ASSOCIATED EQUIPMENT NO. — XX XXX
- INSTRUMENT ISA IDENTIFICATION
- PANEL MOUNTED INSTRUMENT
- ELECTRICAL OR CONTROL SIGNAL — XX XXX
- LOCAL MOUNTED INSTRUMENT
- INSTRUMENT ISA IDENTIFICATION
- ASSOCIATED EQUIPMENT NO.
- ALPHA SUFFIX USED IN ASSOCIATED MELT SYSTEMS

"TYPICAL" IDENTIFICATION:

- XXX / TYP. XX / XXX — LOGIC SEQUENCE NUMBER; P&ID TYPICAL DETAIL REFERENCE NUMBER; INSTRUMENT LOOP NUMBER
- YY-ZZZ-XXX — EQUIPMENT NUMBER (WHERE APPLICABLE)
- K — RELAY
- I — INTERLOCK

- PRIMARY ELEMENT OR LOCALLY MOUNTED INSTRUMENT
- FRONT PANEL MOUNTED INSTRUMENT IN CONTROL ROOM
- INSTRUMENT MOUNTED ON BACK OF PANEL
- INSTRUMENT FRONT PANEL MOUNTED AT AN AUXILIARY LOCATION
- MONITOR AND CONTROL SYSTEM (MCS) LOCAL SHARED DISPLAY & CONTROL (VIDEO SCREEN)
- COMPUTER FUNCTION
- MONITOR AND CONTROL SYSTEM (MCS) SHARED DISPLAY (VIDEO SCREEN) THROUGH PLC IN CONTROL ROOM
- PROGRAMMABLE LOGIC CONTROLLER PRIMARY LOCATION
- PROGRAMMABLE LOGIC CONTROLLER FIELD MOUNTED
- CONVEYING FLUID — SHEET 2 — Z XX — DRAWING CONTINUATION ARROW USED ONLY FOR LINES ENTERING OR LEAVING THE FACE OF THE DRAWING; CONTINUATION DRAWING AND SHEET NUMBER; DWG ZONE LOCATION

ISA IDENTIFICATION LETTERS

	FIRST-LETTER		SUCCEEDING-LETTERS		
	MEASURED OR INITIATING VARIABLE	MODIFIER	READOUT OR PASSIVE FUNCTION	OUTPUT FUNCTION	MODIFIER
A	ANALYSIS		ALARM		
B	BURNER, COMBUSTION		USER'S CHOICE	USER'S CHOICE	USER'S CHOICE
C	CONDUCTIVITY	CONTROLLER		CONTROL	
D	DENSITY	DIFFERENTIAL/DETECTOR			
E	VOLTAGE		SENSOR (PRIMARY ELEMENT)		
F	FLOW RATE	RATIO (FRACTION)			
G	USER'S CHOICE		GLASS, VIEWING DEVICE		
H	HAND				HIGH
I	CURRENT (ELECTRICAL)		INDICATE		
J	POWER	SCAN			
K	TIME, TIME SCHEDULE	TIME RATE OF CHANGE		CONTROL STATION	
L	LEVEL		LIGHT		LOW
M	MOISTURE	MOMENTARY			MIDDLE, INTERMEDIATE
N	USER'S CHOICE		USER'S CHOICE	USER'S CHOICE	USER'S CHOICE
O	USER'S CHOICE		ORIFICE, RESTRICTION		
P	PRESSURE, VACUUM		POINT (TEST) CONNECTION		
Q	QUANTITY	INTEGRATE, TOTALIZE			
R	RADIATION		RECORD		
S	SPEED, FREQUENCY	SAFETY		SWITCH	SAMPLER
T	TEMPERATURE			TRANSMIT	
U	MULTIVARIABLE		MULTIFUNCTION	MULTIFUNCTION	MULTIFUNCTION
V	VIBRATION, MECHANICAL ANALYSIS			VALVE, DAMPER, LOUVER	
W	WEIGHT, FORCE		WELL		
X	MOTOR STARTER **	X AXIS	UNCLASSIFIED	UNCLASSIFIED	UNCLASSIFIED
Y	EVENT, STATE OR PRESENCE	Y AXIS		RELAY, COMPUTE, CONVERT	
Z	POSITION, DIMENSION	Z AXIS		DRIVER, ACTUATOR, UNCLASSIFIED	

** INCLUDES FIELD PUSH BUTTON STATION

EQUIPMENT NOMENCLATURE

32-061-014
- EQUIPMENT NUMBER
- EQUIPMENT CODE
- PROCESS AREA

Rev.	REVISION DESCRIPTION	Date	By	CHK'D	Approved Lead Tech	Approved Proj Eng
N	ISSUED FOR REVISION & 90% REPORT	26 MAY 05	AA	BM	FWS	FS

Rev.	REVISION DESCRIPTION	Date	By	CHK'D	Approved Lead Tech	Approved Proj Eng	
M	ISSUED FOR REVISION & 90% REPORT	22 APR 05	AA	BM	FWS	TH	1d
L	ISSUED FOR REVISION & 90% REPORT	01 APR 05	AA	BM	FWS	TH	
K	ISSUED FOR REVISION & 90% REPORT	03 MAR 05	AA	BM	FWS	TH	
J	ISSUED FOR REVISION & 90% REPORT	15 FEB 05	AA	BM	FWS	TH	1c
I	ISSUED FOR APPROVAL & 90% REPORT	20 JAN 05	AA	BM	FWS	TH	
H	ISSUED FOR CHEM INTL REVIEW	09 DEC 04	AA	BM	FWS	TH	
G	ISSUED FOR GENERAL UPDATES & INFORMATION	03 NOV 04	AA	BM	FWS	TH	
F	ISSUED FOR VENDOR INFORMATION	8 Oct 04	WV	CCH	FWS	JDS	
E	ISSUED FOR APPROVAL	27 AUG 04	ROB	CCH	FWS	TH	
D	INTERNAL ISSUED FOR INFORMATION DRAWING NUMBER REVISED, WAS F-143643-00-A-0100 rC	23 JUL 04	JEW	CCH	FWS	JDS	1b
C	ISSUED FOR TASK 6 REPORT	7 APR 04	ROB	CCH	FWS	TH	
B	ISSUED FOR COMMENT	27 FEB 04	JDY	CCH	FWS	JDS	
A	ISSUED FOR INTERNAL REVIEW	9 FEB 04	ROB		FWS		1a

DWG NO	TITLE	REF NUMBER	TITLE
–	DRAWING TRACEABILITY LIST	– REFERENCES	NEXT USED ON

REV	DATE	DESCRIPTION	DRAWN BY	CHECKED BY	CHK'D	CONTRACT
–						

REVISIONS

DWG NO F-145579-00-A-0100 — REV N

amec

NAME

145579-FINAL DBVS DESIGN

U.S. DEPARTMENT OF ENERGY
Office of River Protection

BULK VITRIFICATION
P&ID
SYMBOL LEGEND

SIZE F

In making requests for transmittal of data by any electronic media, the Company receiving such data agrees that AMEC Americas Limited cannot be held responsible for users of the data outside of or beyond the scope of our original agreement. Also, because data stored in electronic media or transmitted by electronic means can deteriorate undetected or be modified without the consultant's knowledge, the Company receiving data agrees that AMEC Americas Limited cannot be held liable for the correctness, completeness or correctness of the data.

EIN: 36-D61-094
H.P.: 0.5
F.L.A.: 1.1
RPM: ?????

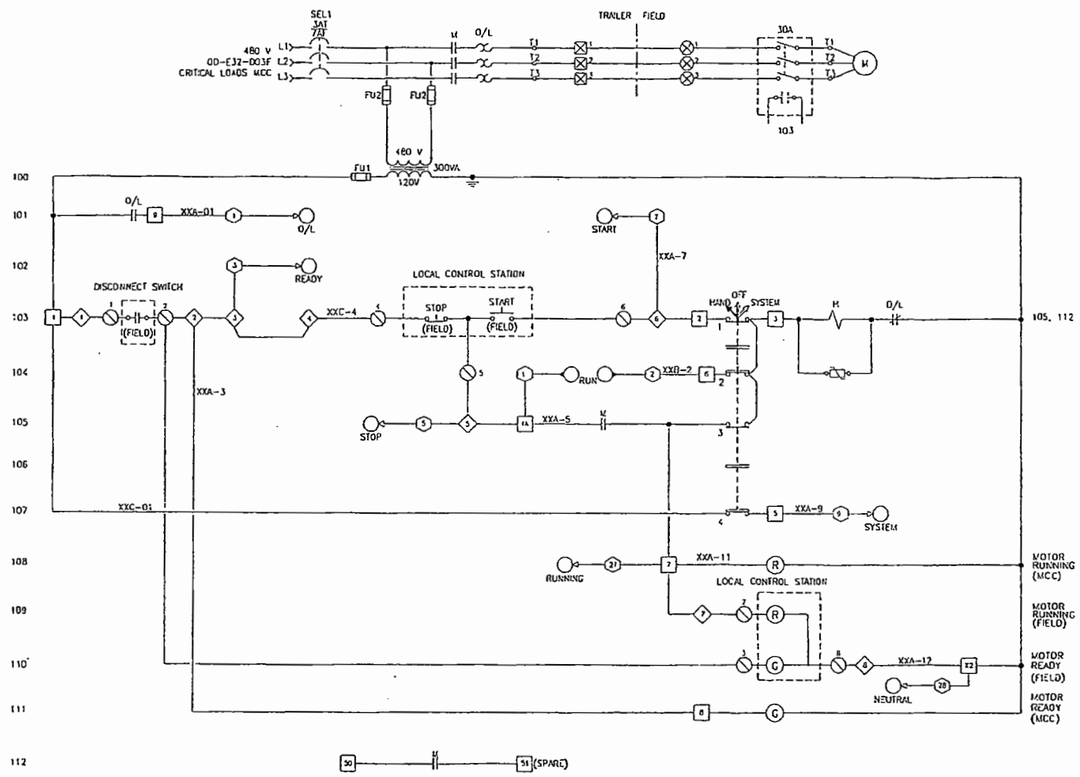

HAND/OFF/SYSTEM

CONTACT	HAND	OFF	SYSTEM
1	X	O	O
2	O	O	X
3	X	O	O
4	O	O	X

X = CLOSED
O = OPEN

LEGEND

- M — MOTOR
- M — CONTACTOR RELAY
- M — STARTER CONTACT
- C — GREEN INDICATING LIGHT
- R — RED INDICATING LIGHT
- START — MOMENTARY PUSH BUTTON SWITCH
- STOP — MOMENTARY PUSH BUTTON SWITCH
- THREE POLE CIRCUIT BREAKER
- SURGE SUPPRESSOR
- 480V TRAILER J.B., PTB208
- 120V TRAILER J.B., TB502
- 120V FIELD J.B., TB502
- FIELD J.B., TB208
- TERMINAL BLOCK IN STARTER
- I/O PANEL INPUT TB202, OUTPUT TB215
- PLC OUTPUT
- PLC INPUT
- ANALOG I/O PANEL TERMINAL
- MOTOR OVERLOAD RELAY
- O/L — MOTOR OVERLOAD CONTACTS
- CURRENT TRANSFORMER
- THREE POLE DISCONNECT SWITCH
- HAND OFF SYSTEM — THREE POSITION SELECTOR SWITCH

Rev.	REVISION DESCRIPTION	Date	By	CHK'D	Approved	Approved
C	ISSUED FOR CHIM REVIEW & SCX REPORT	30 Mar 05	MV	DJM	JFA	TH
B	FOR INTERNAL APPROVAL	11 MAR 05	JAA	DJM	JFA	TH
A	FOR INTERNAL REVIEW	03 DEC 04	DCM	DJM	JFA	TH

AMEC DRAWING NO: F-145579-00-E-0107 — REV: C

amec

AMEC PROJECT: 145579-FINAL DBVS DESIGN

U.S. DEPARTMENT OF ENERGY
Office of River Protection

BULK VITRIFICATION
OFF-GAS CAUSTIC PUMP
SCHEMATIC DIAGRAM

SIZE: F — SCALE: — SHEET 1 of 2

DWG NO	TITLE
–	–

DRAWING TRACEABILITY LIST

REF NUMBER	TITLE
–	–

REFERENCES — NEXT USED ON

REV NO	REV DATE	DESCRIPTION	CHK'D BY	APPROVED BY	CHECK
–					

REVISIONS

In making requests for transmittal of data by any electronic media, the Company receiving such data agrees that AMEC Americas Limited cannot be held responsible for loss of the data either at or beyond the scope of our original agreement. Also, because data stored in electronic media or transmitted by electronic means can deteriorate undetected or be modified without the consultant's knowledge, the Company receiving data agrees that AMEC Americas Limited cannot be held liable for the compatibility, completeness or correctness of the data.

EIN: 36-D61-094
H.P.: 0.5
F.L.A.: 1.1
RPM: ???

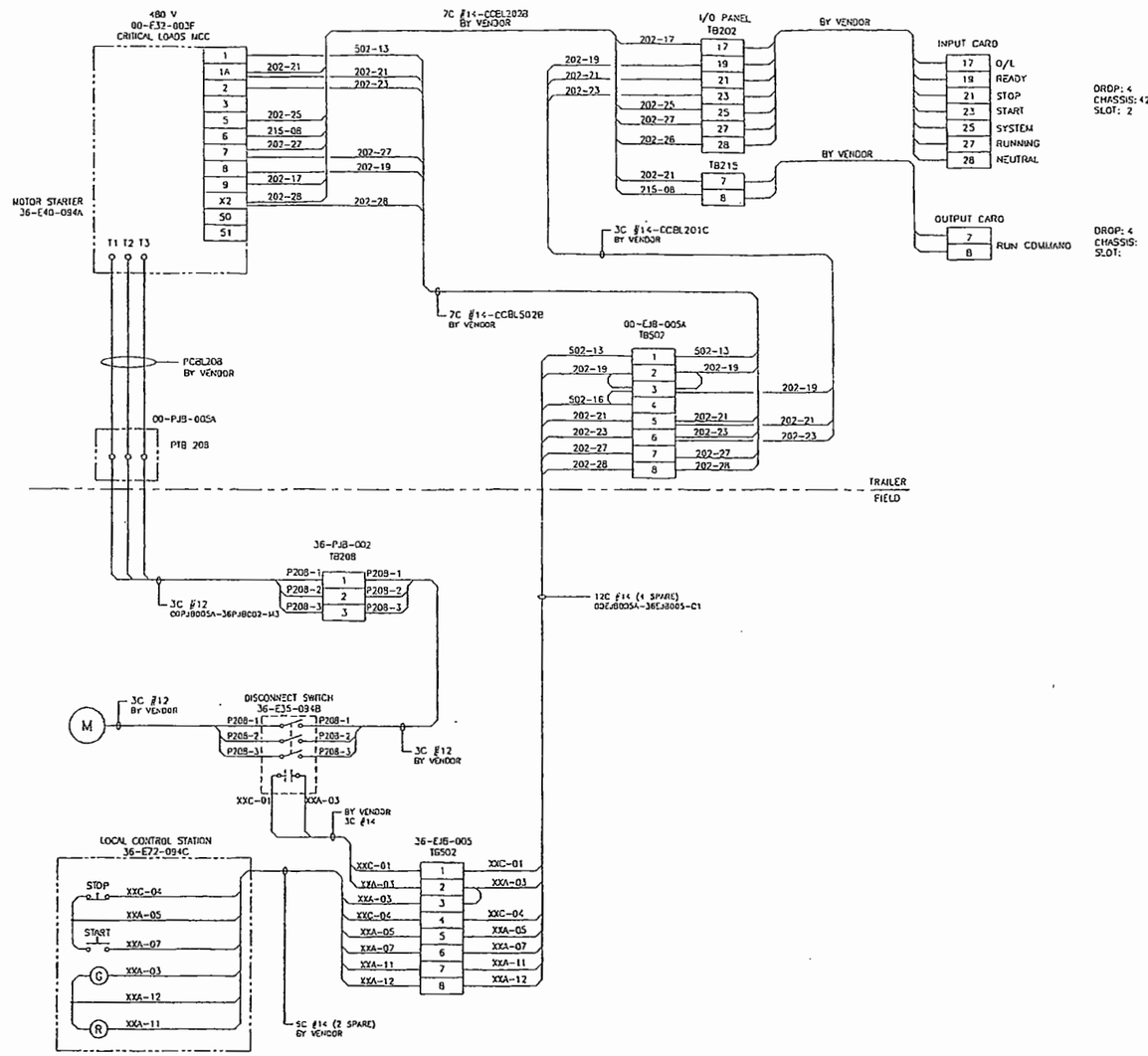

NOTES:
1. ENSURE ALL FIELD INSTALLED INTERCONNECTING CABLES INCORPORATE AN EQUIPMENT GROUNDING CONDUCTOR THAT IS GROUNDED AT BOTH ENDS. EQUIPMENT GROUNDING CONDUCTORS ARE NOT SHOWN ON DRAWING FOR CLARITY.
2. WIRING TO THE PLC DIGITAL I/O CARDS IS #18 AWG.

HOLD FOR VENDOR INFO

Rev.	REVISION DESCRIPTION	Date	By	Chk'd	Approved Design Eng.	Approved Proj. Eng.
C	ISSUED FOR CH2M REVIEW & 90% REPORT	30 Mar 05	MV	GJM	JTA	TH
B	FOR INTERNAL APPROVAL	11 MAR 05	JAA	GJM	JTA	TH
A	FOR INTERNAL REVIEW	09 DEC 04	DCW	DJM	JTA	BH

AMEC DRAWING NO: F-145579-00-E-0107 REV: C

amec

AMEC PROJECT: 145579-FINAL DBVS DESIGN

U.S. DEPARTMENT OF ENERGY
Office of River Protection

BULK VITRIFICATION
OFF-GAS CAUSTIC PUMP
WIRING DIAGRAM

SIZE: F

SHEET 2 OF 2

DWG NO	TITLE
DRAWING TRACEABILITY LIST	

REF NUMBER	TITLE
NEXT USED ON	REFERENCES

REV NO	DESCRIPTION	DATE	CHECKED BY	CHK'D
REVISIONS				

In making requests for transmittal of data by any electronic media, the Company receiving such data agrees that AMEC Americas Limited cannot be held responsible for uses of the data outside of or beyond the scope of our original agreement. Also, because data stored in electronic media or transmitted by electronic means can deteriorate undetected or be modified without the consultant's knowledge, the Company receiving data agrees that AMEC Americas Limited cannot be held liable for the compatibility, completeness or correctness of the data.

EIN: 36-D57-095

H.P.: 0.5

F.L.A.: 1.1

RPM: ?????

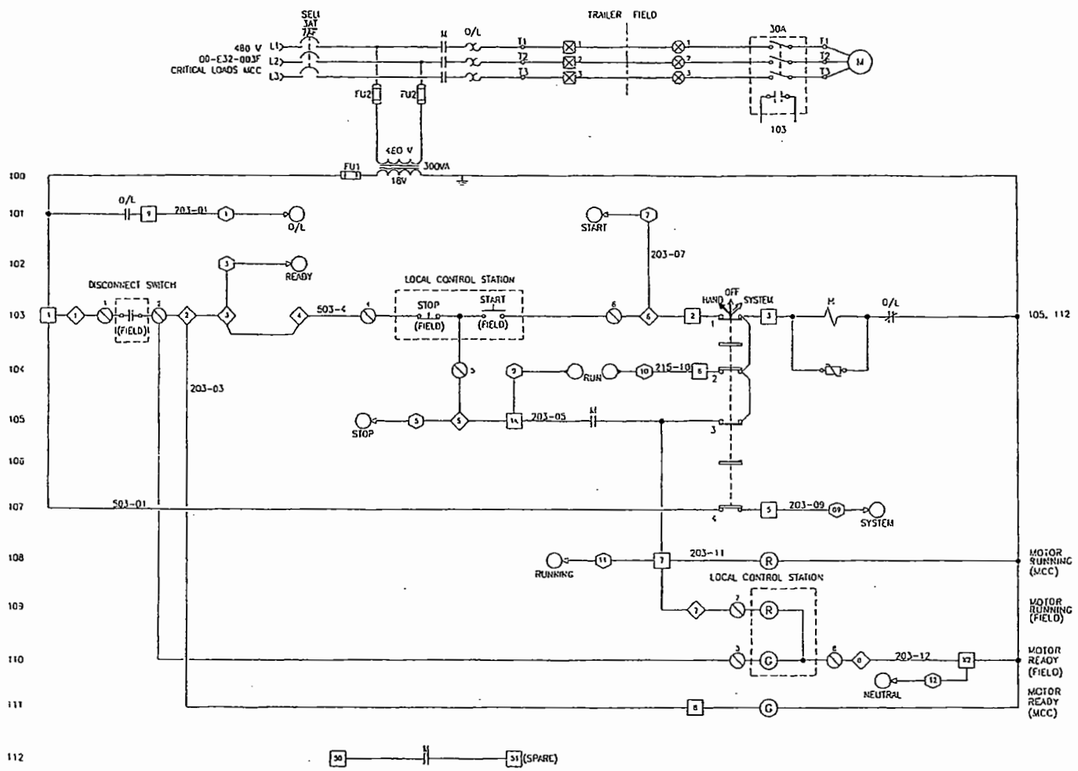

HAND/OFF/SYSTEM

CONTACT	HAND	OFF	SYSTEM
1	X	0	0
2	0	0	X
3	X	0	0
4	0	0	X

X = CLOSED

0 = OPEN

HOLD FOR VENDOR INFO

LEGEND

- M — MOTOR
- CONTACTOR RELAY
- STARTER CONTACT
- G — GREEN INDICATING LIGHT
- R — RED INDICATING LIGHT
- START — MOMENTARY PUSH BUTTON SWITCH
- STOP — MOMENTARY PUSH BUTTON SWITCH
- THREE POLE CIRCUIT BREAKER
- SURGE SUPPRESSOR
- 480V TRAILER J.B., PTB209
- 18V TRAILER J.B., TB503
- 16V FIELD J.B., TB503
- FIELD J.B., TB209
- TERMINAL BLOCK IN STARTER
- I/O PANEL INPUT TB203, OUTPUT TB215
- PLC OUTPUT
- PLC INPUT
- ANALOG I/O PANEL TERMINAL
- MOTOR OVERLOAD RELAY
- O/L — MOTOR OVERLOAD CONTACTS
- CURRENT TRANSFORMER
- THREE POLE DISCONNECT SWITCH
- HAND OFF SYSTEM — THREE POSITION SELECTOR SWITCH

Rev.	REVISION DESCRIPTION	Date	By	Checked	Approved Project Lead	Approved Proj Mgr	Approved Dept Mgr
C	ISSUED FOR CHEM REVIEW & SOK REPORT	30 Mar 05	LV	DJH	JTA	TH	
B	FOR INTERNAL APPROVAL	11 MAR 05	JAL	DJH	JTA	TH	
A	FOR INTERNAL REVIEW	09 DEC 04	DCW	DJH	JTA	TH	

AMEC DRAWING NO: F-25579-00-E-0108 REV: C

amec

AMEC PROJECT: 145579-FINAL DBVS DESIGN

U.S. DEPARTMENT OF ENERGY
Office of River Protection

BULK VITRIFICATION
OFF-GAS CAUSTIC MIXER
SCHEMATIC DIAGRAM

SIZE F

SCALE — SHT 1 OF 2

DWG NO	TITLE
DRAWING TRACEABILITY LIST	

REF NUMBER	TITLE
NEXT USED ON	REFERENCES

REVISIONS

In making requests for transmittal of data by any electronic media, the Company receiving such data agrees that AMEC Americas Limited cannot be held responsible for uses of the data outside of or beyond the scope of our original agreement. Also, because data stored in electronic media or transmitted by electronic means can deteriorate undetected or be modified without the consultant's knowledge, the Company receiving data agrees that AMEC Americas Limited cannot be held liable for the compatibility, completeness or correctness of the data.

EIN: 36-D57-095
H.P.: 0.5
F.L.A.: 1.1
RPM: ???

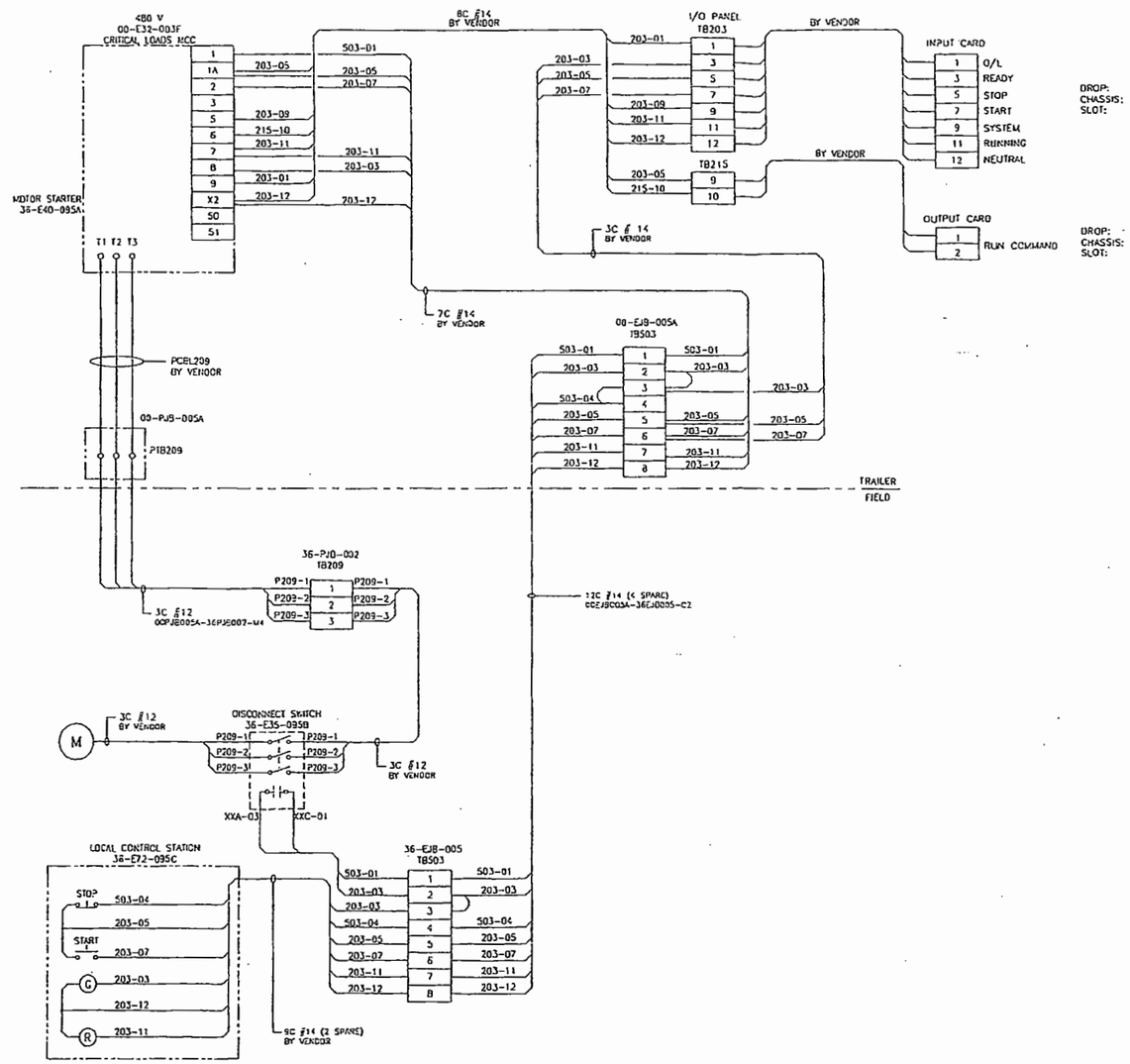

NOTES:
1. ENSURE ALL FIELD INSTALLED INTERCONNECTING CABLES INCORPORATE AN EQUIPMENT GROUNDING CONDUCTOR THAT IS GROUNDED AT BOTH ENDS. EQUIPMENT GROUNDING CONDUCTORS ARE NOT SHOWN ON DRAWING FOR CLARITY.
2. WIRING TO THE PLC DIGITAL I/O CARDS IS #16 AWG.

REV	REVISION DESCRIPTION	DATE	BY	CHKD	APPROVED	APPROVED
C	ISSUED FOR CH2M REVIEW & 90% REPORT	30 Mar 05	WV	DJM	JTA	TH
B	FOR INTERNAL APPROVAL	11 MAR 05	JAA	DJM	JTA	TH
A	FOR INTERNAL REVIEW	09 DEC 04	DCW	DJM	JTA	TH

AMEC SERVICE NO: F-145579-00-E-0108 REV: C

amec

AMEC PROJECT: 145579-FINAL DBVS DESIGN

U.S. DEPARTMENT OF ENERGY
Office of River Protection

BULK VITRIFICATION
OFF-GAS CAUSTIC MIXER
WIRING DIAGRAM

SIZE: F SCALE: SHEET 2 OF 2

DWG NO	TITLE
DRAWING TRACEABILITY LIST	

REF NUMBER	TITLE
REFERENCES	

REV	DESCRIPTION	DATE	BY	CHKD	APPROVED
REVISIONS					

In making requests for transmittal of data by any electronic media, the Company receiving such data agrees that AMEC Americas Limited cannot be held responsible for uses of the data outside of or beyond the scope of our original agreement. Also, because data stored in electronic media or transmitted by electronic means can deteriorate undetected or be modified without the consultant's knowledge, the Company receiving data agrees that AMEC Americas Limited cannot be held liable for the compatibility, completeness or correctness of the data.

EIN: 36-D61-051
H.P.: 0.5
F.L.A.: 1.1
RPM: ?????

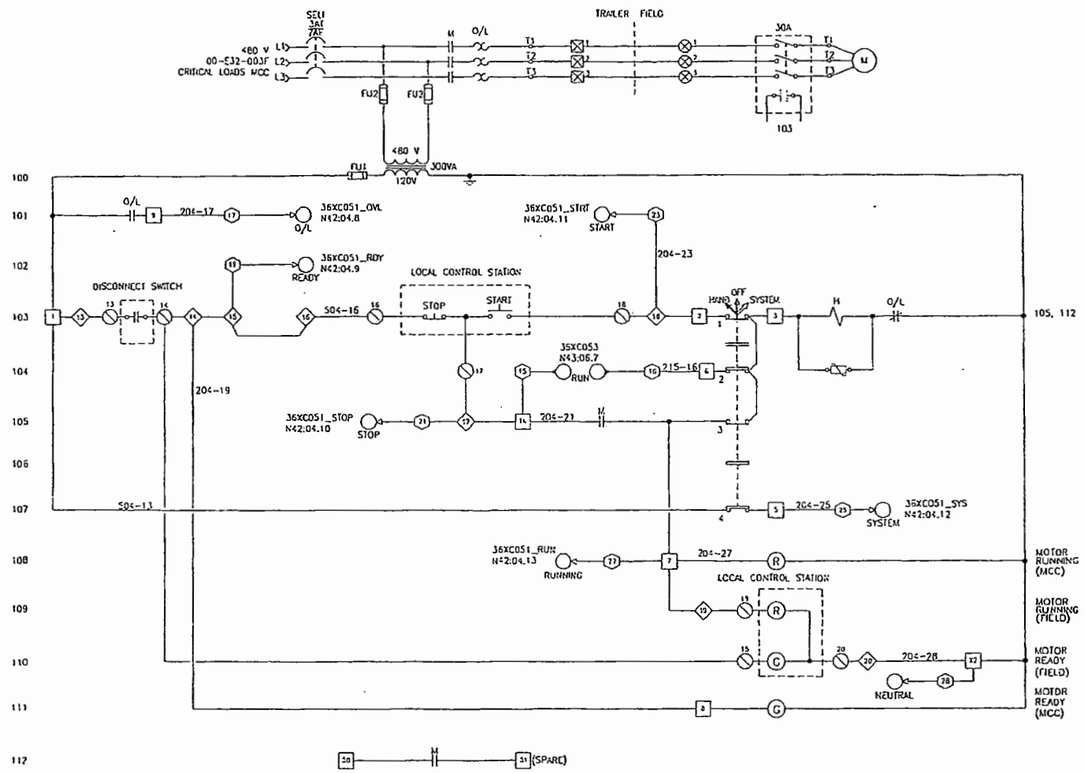

HAND/OFF/SYSTEM

CONTACT	HAND	OFF	SYSTEM
1	X	0	0
2	0	0	X
3	X	0	0
4	0	0	X

X = CLOSED
0 = OPEN

LEGEND

- M — MOTOR
- M — CONTACTOR RELAY
- M — STARTER CONTACT
- G — GREEN INDICATING LIGHT
- R — RED INDICATING LIGHT
- START — MOMENTARY PUSH BUTTON SWITCH
- STOP — MOMENTARY PUSH BUTTON SWITCH
- THREE POLE CIRCUIT BREAKER
- SURGE SUPPRESSOR
- <80V TRAILER J.B., PTB212
- 120V TRAILER J.B., TB504
- 120V FIELD J.B., TB504
- FIELD J.B., TB212
- TERMINAL BLOCK IN STARTER
- I/O PANEL INPUT TB204, OUTPUT TB215
- PLC OUTPUT
- PLC INPUT
- ANALOG I/O PANEL TERMINAL
- MOTOR OVERLOAD RELAY
- O/L — MOTOR OVERLOAD CONTACTS
- CURRENT TRANSFORMER
- THREE POLE DISCONNECT SWITCH
- HAND OFF SYSTEM — THREE POSITION SELECTOR SWITCH

Rev.	REVISION DESCRIPTION	Date	By	Chk'd	Approved Design Eng.	Approved Proj. Eng.
C	ISSUED FOR CHIM REVIEW & SOX REPORT	10 Mar 05	MV	DJM	JTA	TH
B	FOR INTERNAL APPROVAL	11 MAR 05	JAA	DJM	JTA	TH
A	FOR INTERNAL REVIEW	08 DEC 04	DCW	DJM	JTA	TH

AMEC DRAWING NO: F-145579-00-E-0111 REV: C

amec

AMEC PROJECT: 145579-FINAL DBVS DESIGN

U.S. DEPARTMENT OF ENERGY
Office of River Protection

BULK VITRIFICATION
SCRUBBER TANK PUMP No.1
SCHEMATIC DIAGRAM

NAME	DATE
DRAWN BY	
DESIGNED BY	
REVIEWED BY	
REVIEW BY INDUSTRY	
DISCIPLINE MANAGER	
PROJECT MANAGER	
PROGRAM MANAGER	

SIZE F | PLAN NO | PROJ NO | DWG NO | REV
SCALE | REV | SHEET 1 OF 2

DWG NO	TITLE
-	

DRAWING TRACEABILITY LIST

REF NUMBER	TITLE
-	

REFERENCES
NEXT USED ON

REV	DESCRIPTION	DATE	DRAWN BY	CHECKED BY	APPR
-					

REVISIONS

In making requests for transmittals of data by any electronic media, the Company receiving such data agrees that AMEC America Limited cannot be held responsible for users of the data outside of or beyond the scope of our original agreement. Also, because data stored in electronic media or transmitted by electronic means can deteriorate undetected or be modified without the consultant's knowledge, the Company receiving data agrees that AMEC America Limited cannot be held liable for the compatibility, completeness or correctness of the data.

EIN: 36-D61-051
H.P.: 0.5
F.L.A.: 1.1
RPM: ???

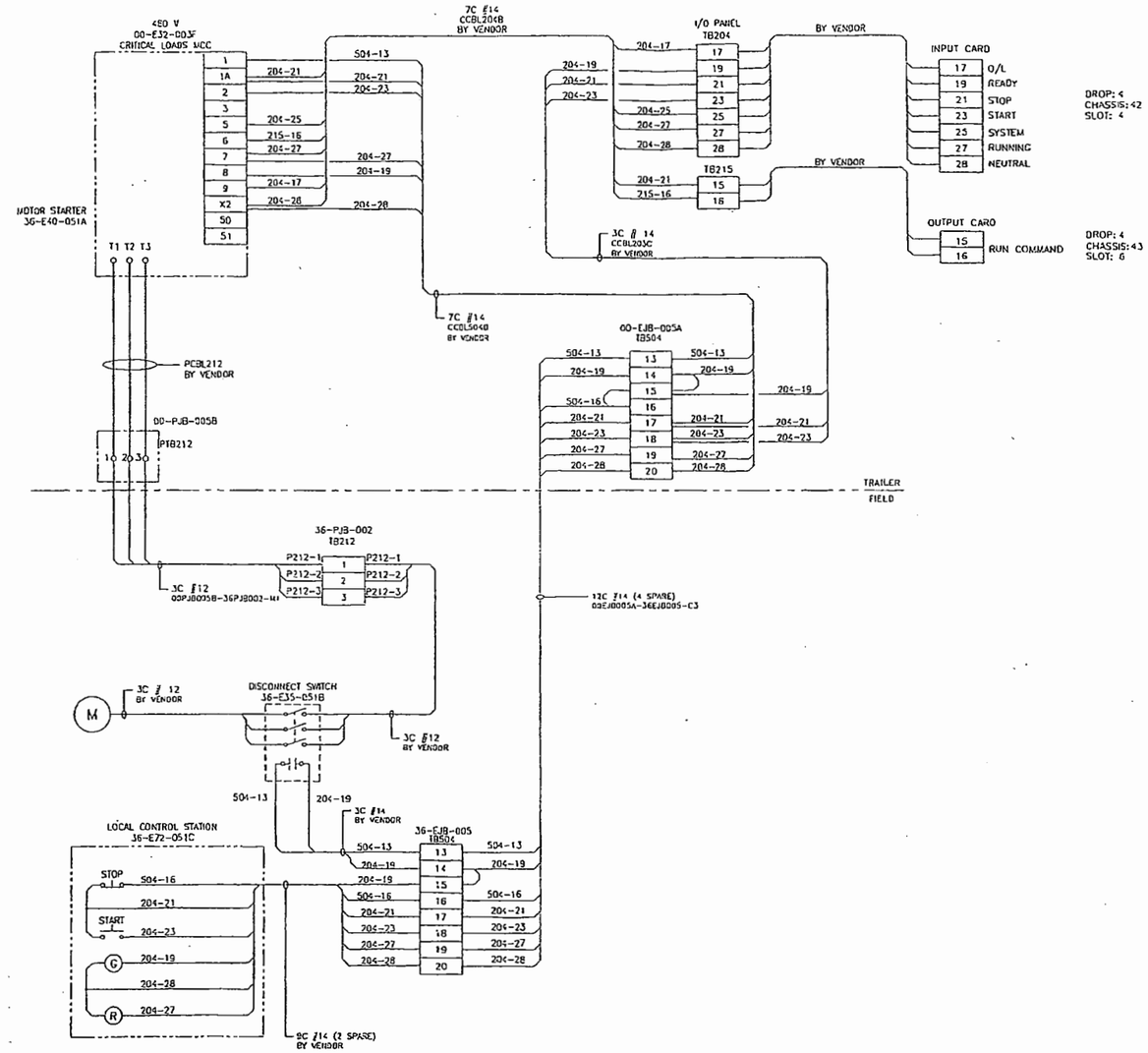

NOTES:
1. ENSURE ALL FIELD INSTALLED INTERCONNECTING CABLES INCORPORATE AN EQUIPMENT GROUNDING CONDUCTOR THAT IS GROUNDED AT BOTH ENDS. EQUIPMENT GROUNDING CONDUCTORS ARE NOT SHOWN ON DRAWING FOR CLARITY.
2. WIRING TO THE PLC DIGITAL I/O CARDS IS #16 AWG.

Rev.	REVISION DESCRIPTION	Date	By	CHK'd	Approved Design Eng.	Approved Proj. Eng.	DCN NO
C	ISSUED FOR CH2M REVIEW & 90% REPORT	30 Mar 05	KAY	DJM	JTA	TH	
B	FOR INTERNAL APPROVAL	11 MAR 05	JAK	DJM	JTA	TH	
A	FOR INTERNAL REVIEW	09 DEC 04	DCW	DJM	JTA	TH	

AMEC DRAWING NO: F-145579-00-E-0111 REV: C

amec

AMEC PROJECT: 145579-FINAL DBVS DESIGN

U.S. DEPARTMENT OF ENERGY
Office of River Protection

BULK VITRIFICATION
SCRUBBER TANK PUMP No.1
WIRING DIAGRAM

SIZE: F SCALE: SHEET 2 of 2

NAME	DATE	SIGNATURE
DRAWN BY		
REVIEWED BY		
CHECKED BY		
DESIGN ENGINEER		
DRAFTING MANAGER		
PROJECT MANAGER		
DESIGN AUTHORITY		

DWG NO	TITLE
-	

DRAWING TRACEABILITY LIST

REF NUMBER	TITLE
-	

REFERENCES
NEXT USED ON

REV	DESCRIPTION	DATE	CHECKED BY	PROJ ENGR	COMPANY
-					

REVISIONS

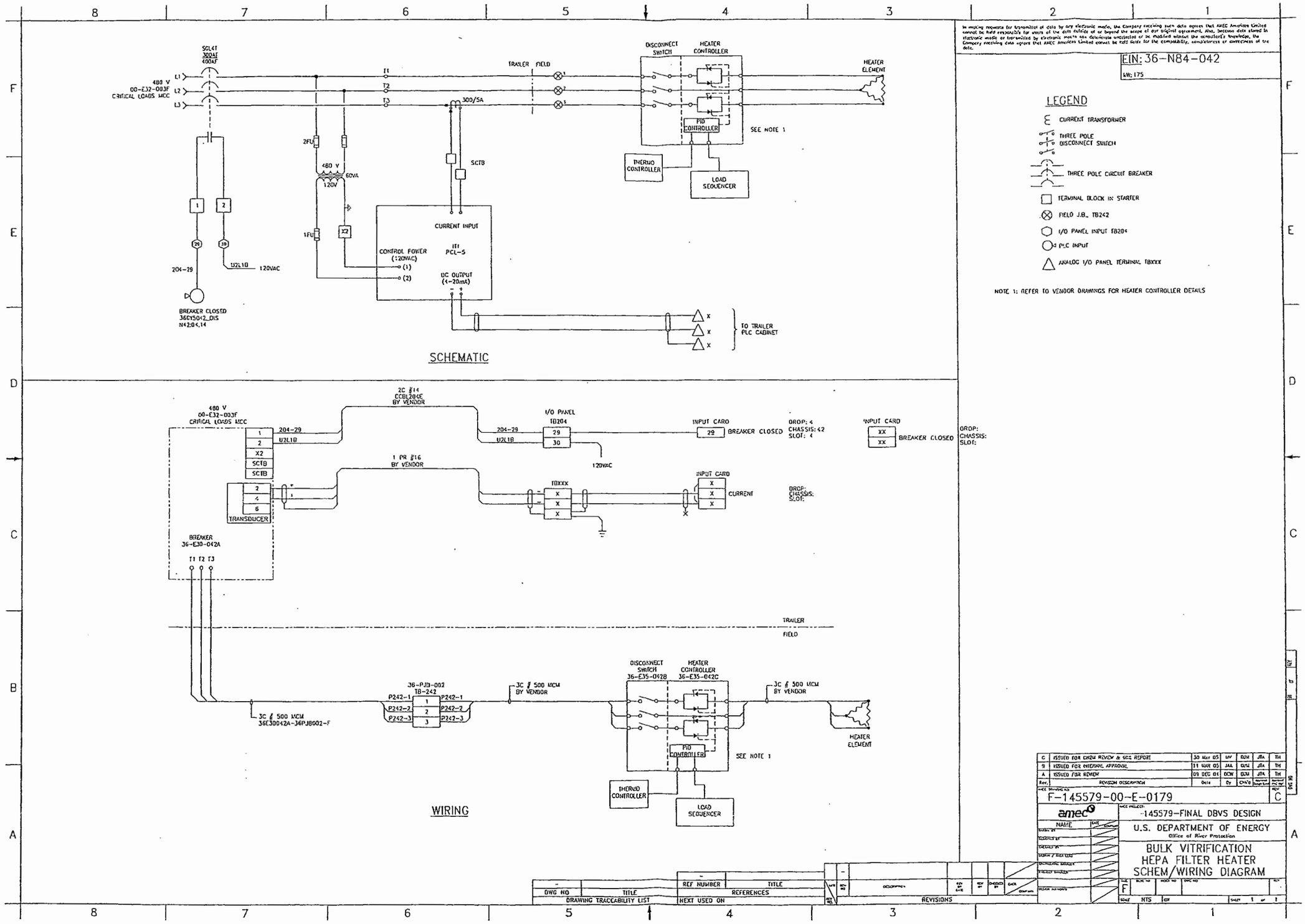
SCHEMATIC
WIRING
LEGEND
CURRENT TRANSFORMER
THREE POLE DISCONNECT SWITCH
THREE POLE CIRCUIT BREAKER
TERMINAL BLOCK IN STARTER
FIELD J.B. TB242
I/O PANEL INPUT TB204
PLC INPUT
ANALOG I/O PANEL TERMINAL TBXXX
NOTE 1: REFER TO VENDOR DRAWINGS FOR HEATER CONTROLLER DETAILS
EIN: 36-N84-042
480 V
00-E32-003F
CRITICAL LOADS MCC
SGL4T
300AF
400AF
TRAILER FIELD
DISCONNECT SWITCH
HEATER CONTROLLER
HEATER ELEMENT
PID CONTROLLER
SEE NOTE 1
THERMO CONTROLLER
LOAD SEQUENCER
300/5A
SCTB
2FU
1FU
480 V
120V
60VA
X2
CURRENT INPUT
CONTROL POWER (120VAC)
PCL-5
DC OUTPUT (4-20mA)
204-29
U2L1B
120VAC
BREAKER CLOSED
36GY5042_DIS
N42:04.14
TO TRAILER PLC CABINET
2C #14
CCBL204E
BY VENDOR
1 PR #16
BY VENDOR
I/O PANEL
TB204
INPUT CARD
BREAKER CLOSED
DROP: 4
CHASSIS: 42
SLOT: 4
TBXXX
CURRENT
TRANSDUCER
BREAKER
36-E30-042A
T1 T2 T3
TRAILER
FIELD
DISCONNECT SWITCH
36-E35-042B
HEATER CONTROLLER
36-E35-042C
36-PJB-002
TB-242
P242-1
P242-2
P242-3
3C # 500 MCM
BY VENDOR
3C # 500 MCM
36E30042A-36PJB002-F
HEATER ELEMENT
THERMO CONTROLLER
LOAD SEQUENCER
C ISSUED FOR CHZM REVIEW & SCE REPORT 30 Mar 05
B ISSUED FOR INTERNAL APPROVAL 11 MAR 05
A ISSUED FOR REVIEW 09 DEC 04
F-145579-00-E-0179
-145579-FINAL DBVS DESIGN
U.S. DEPARTMENT OF ENERGY
Office of River Protection
BULK VITRIFICATION
HEPA FILTER HEATER
SCHEM/WIRING DIAGRAM
SCALE NTS
DRAWING TRACEABILITY LIST
REFERENCES
REVISIONS

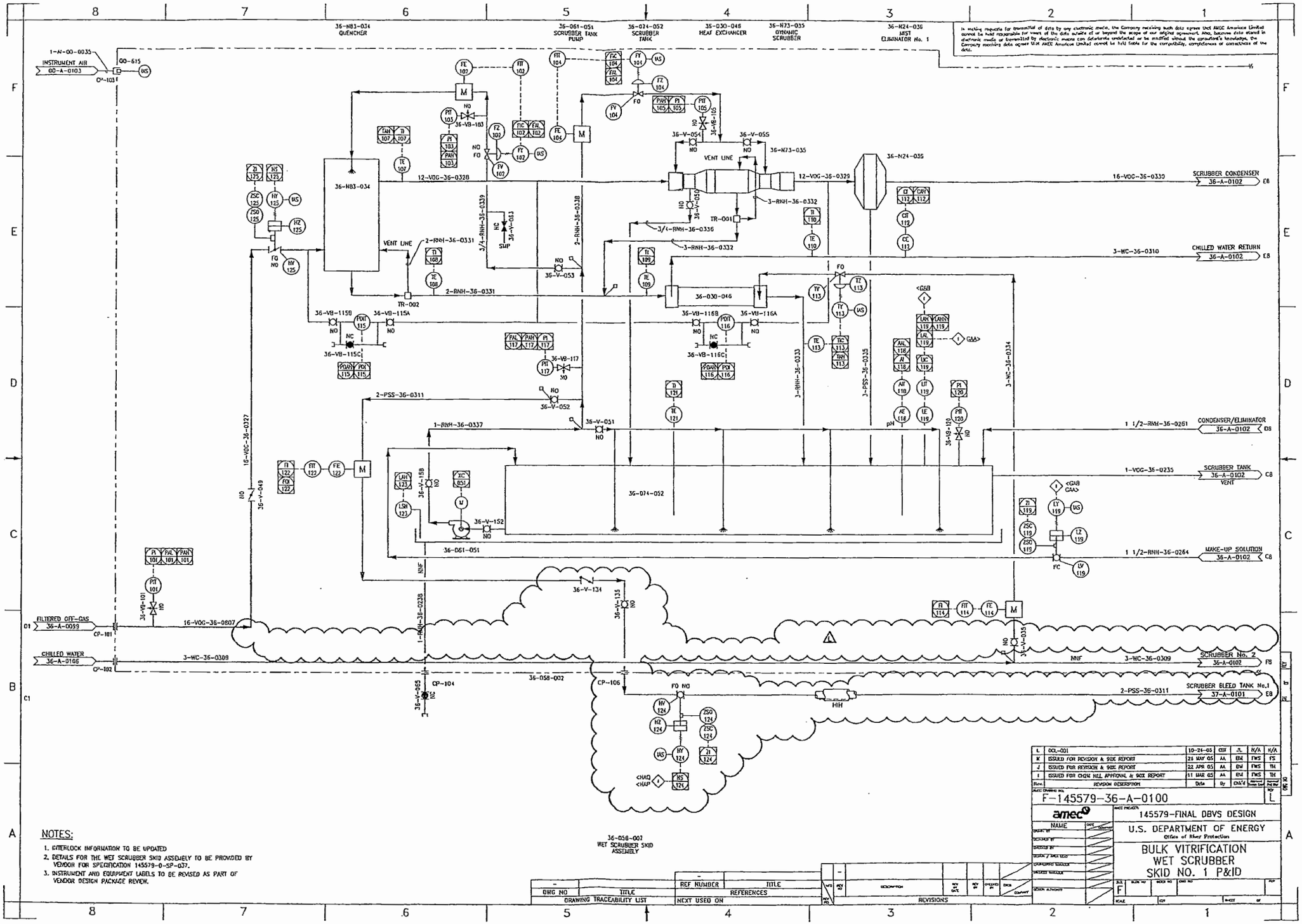
36-NB3-034 QUENCHER
36-061-051 SCRUBBER TANK PUMP
36-074-052 SCRUBBER TANK
36-030-046 HEAT EXCHANGER
36-N73-035 DYNAMIC SCRUBBER
36-N24-036 MIST ELIMINATOR No. 1
INSTRUMENT AIR
SCRUBBER CONDENSER 36-A-0102
CHILLED WATER RETURN 36-A-0102
CONDENSER/ELIMINATOR 36-A-0102
SCRUBBER TANK 36-A-0102 VENT
MAKE-UP SOLUTION 36-A-0102
FILTERED OFF-GAS 36-A-0099
CHILLED WATER 36-A-0106
SCRUBBER No. 2 36-A-0102
SCRUBBER BLEED TANK No.1 37-A-0101
36-058-002 WET SCRUBBER SKID ASSEMBLY
VENT LINE
F-145579-36-A-0100
145579-FINAL DBVS DESIGN
U.S. DEPARTMENT OF ENERGY
Office of River Protection
BULK VITRIFICATION WET SCRUBBER SKID NO. 1 P&ID
NOTES:
1. INTERLOCK INFORMATION TO BE UPDATED
2. DETAILS FOR THE WET SCRUBBER SKID ASSEMBLY TO BE PROVIDED BY VENDOR FOR SPECIFICATION 145579-0-SP-037.
3. INSTRUMENT AND EQUIPMENT LABELS TO BE REVISED AS PART OF VENDOR DESIGN PACKAGE REVIEW.
DRAWING TRACEABILITY LIST
REVISIONS

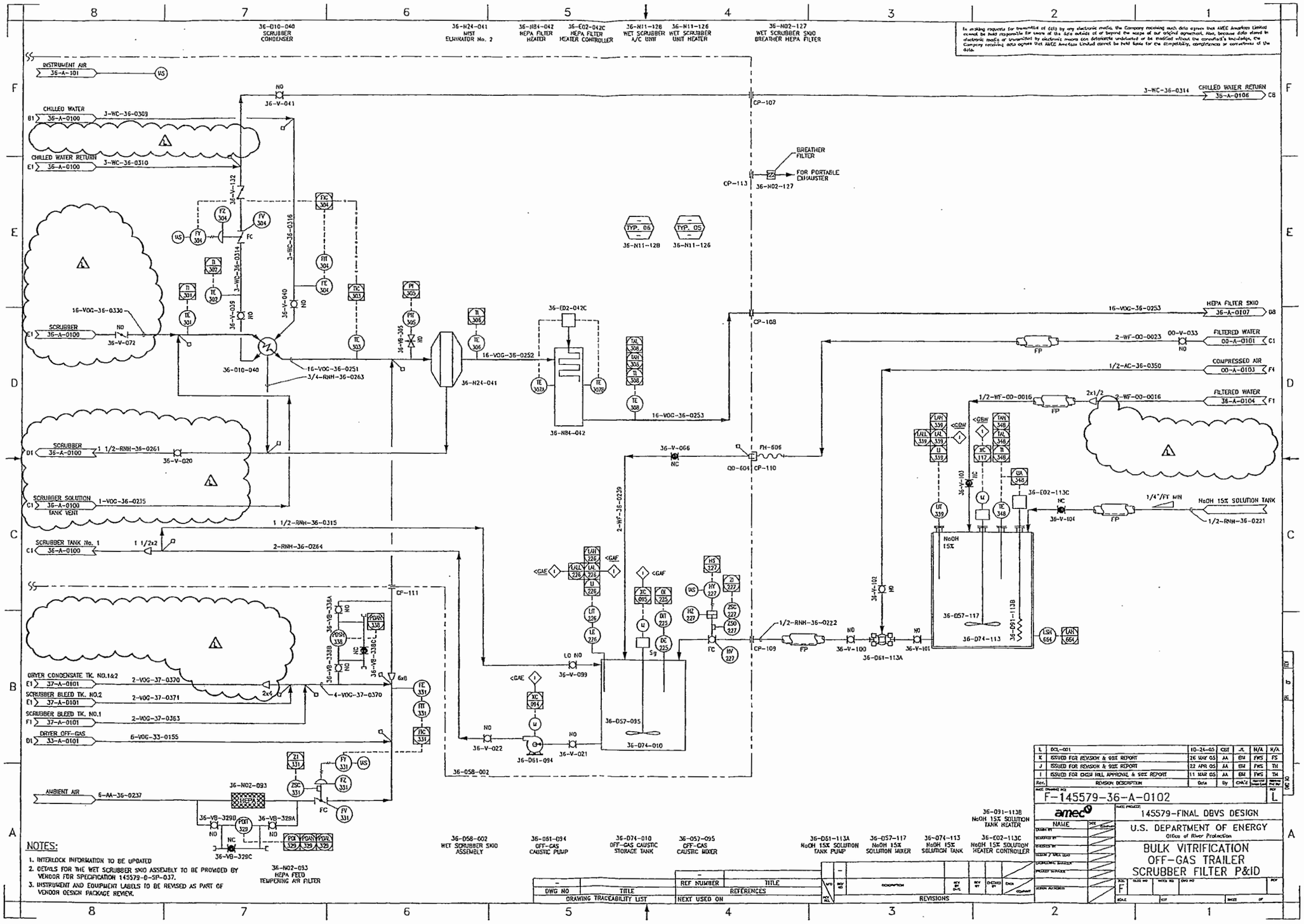
36-010-040 SCRUBBER CONDENSER
36-N24-041 MIST ELIMINATOR No. 2
36-H84-042 HEPA FILTER HEATER
36-E02-042C HEPA FILTER HEATER CONTROLLER
36-N11-128 WET SCRUBBER A/C UNIT
36-N11-126 WET SCRUBBER UNIT HEATER
36-N02-127 WET SCRUBBER SKID BREATHER HEPA FILTER
INSTRUMENT AIR 36-A-101
CHILLED WATER 36-A-0100
CHILLED WATER RETURN 36-A-0100
CHILLED WATER RETURN 36-A-0106
BREATHER FILTER
FOR PORTABLE EXHAUSTER
HEPA FILTER SKID 36-A-0107
FILTERED WATER 00-A-0101
COMPRESSED AIR 00-A-0103
FILTERED WATER 36-A-0104
SCRUBBER 36-A-0100
SCRUBBER SOLUTION TANK VENT
SCRUBBER TANK No. 1
NaOH 15% SOLUTION TANK
DRYER CONDENSATE TK. NO.1&2
SCRUBBER BLEED TK. NO.2
SCRUBBER BLEED TK. NO.1
DRYER OFF-GAS
AMBIENT AIR
36-N02-093 HEPA FEED TEMPERING AIR FILTER
36-058-002 WET SCRUBBER SKID ASSEMBLY
36-061-094 OFF-GAS CAUSTIC PUMP
36-074-010 OFF-GAS CAUSTIC STORAGE TANK
36-057-095 OFF-GAS CAUSTIC MIXER
36-061-113A NaOH 15% SOLUTION TANK PUMP
36-057-117 NaOH 15% SOLUTION MIXER
36-074-113 NaOH 15% SOLUTION TANK
36-091-113B NaOH 15% SOLUTION TANK HEATER
36-E02-113C NaOH 15% SOLUTION HEATER CONTROLLER
NOTES:
1. INTERLOCK INFORMATION TO BE UPDATED
2. DETAILS FOR THE WET SCRUBBER SKID ASSEMBLY TO BE PROVIDED BY VENDOR FOR SPECIFICATION 145579-0-SP-037.
3. INSTRUMENT AND EQUIPMENT LABELS TO BE REVISED AS PART OF VENDOR DESIGN PACKAGE REVIEW.
DRAWING TRACEABILITY LIST
REVISIONS
F-145579-36-A-0102
145579-FINAL DBVS DESIGN
U.S. DEPARTMENT OF ENERGY
Office of River Protection
BULK VITRIFICATION
OFF-GAS TRAILER
SCRUBBER FILTER P&ID

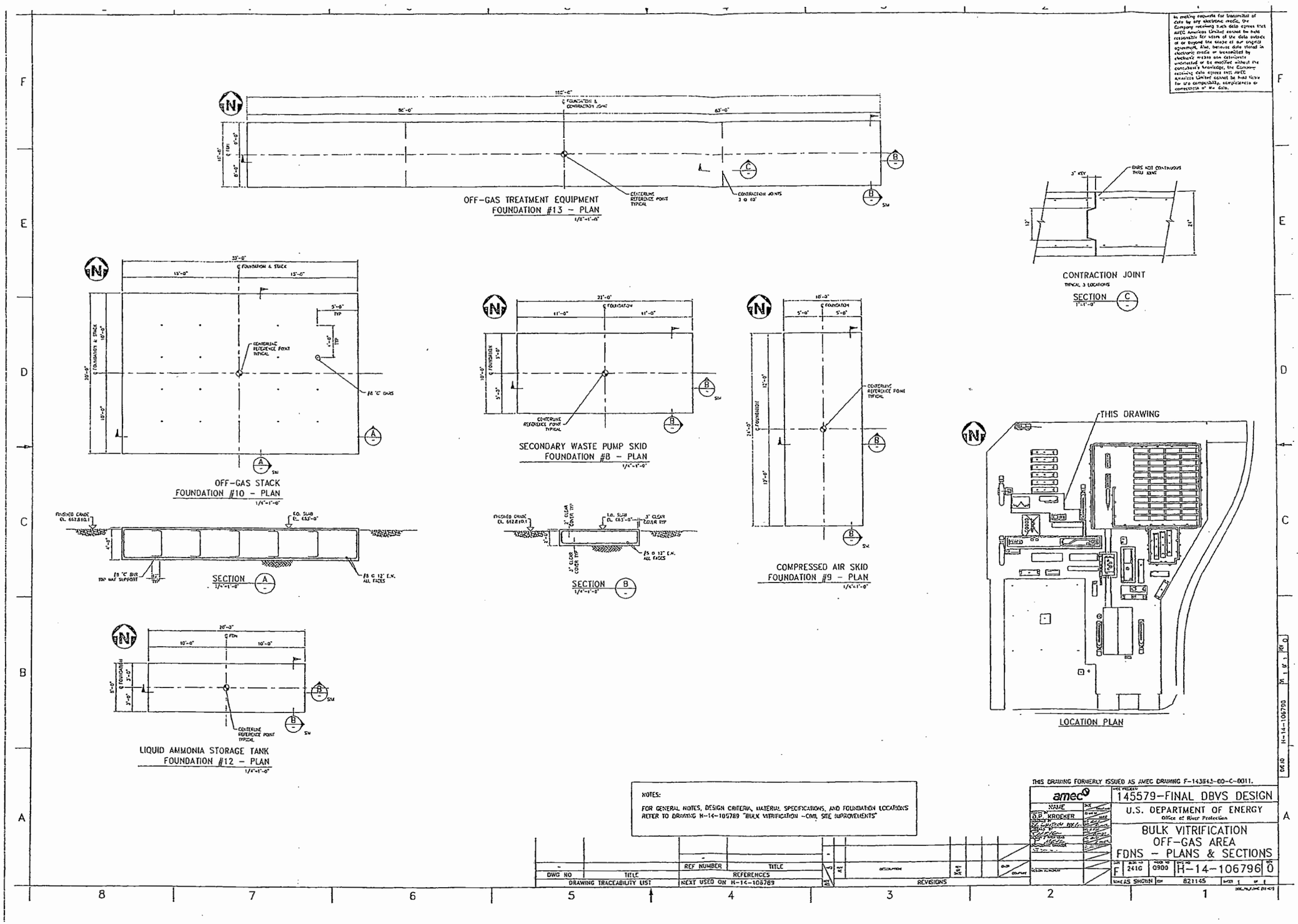
OFF-GAS TREATMENT EQUIPMENT
FOUNDATION #13 – PLAN
1/8"=1'-0"
CONTRACTION JOINT
TYPICAL 3 LOCATIONS
SECTION C
1"=1'-0"
OFF-GAS STACK
FOUNDATION #10 – PLAN
1/4"=1'-0"
SECONDARY WASTE PUMP SKID
FOUNDATION #8 – PLAN
1/4"=1'-0"
COMPRESSED AIR SKID
FOUNDATION #9 – PLAN
1/4"=1'-0"
THIS DRAWING
LOCATION PLAN
SECTION A
1/4"=1'-0"
SECTION B
1/4"=1'-0"
LIQUID AMMONIA STORAGE TANK
FOUNDATION #12 – PLAN
1/4"=1'-0"
NOTES:
FOR GENERAL NOTES, DESIGN CRITERIA, MATERIAL SPECIFICATIONS, AND FOUNDATION LOCATIONS REFER TO DRAWING H-14-106789 "BULK VITRIFICATION -CIVIL SITE IMPROVEMENTS"
THIS DRAWING FORMERLY ISSUED AS AMEC DRAWING F-143843-00-C-0011.
amec
145579-FINAL DBVS DESIGN
U.S. DEPARTMENT OF ENERGY
Office of River Protection
BULK VITRIFICATION
OFF-GAS AREA
FDNS – PLANS & SECTIONS
H-14-106796
DRAWING TRACEABILITY LIST
REVISIONS

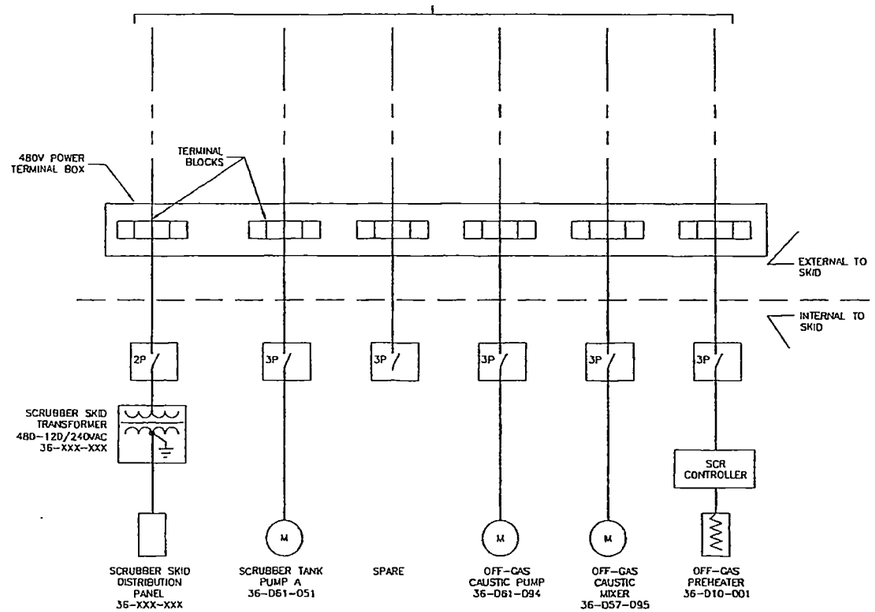

ONE-LINE DIAGRAM

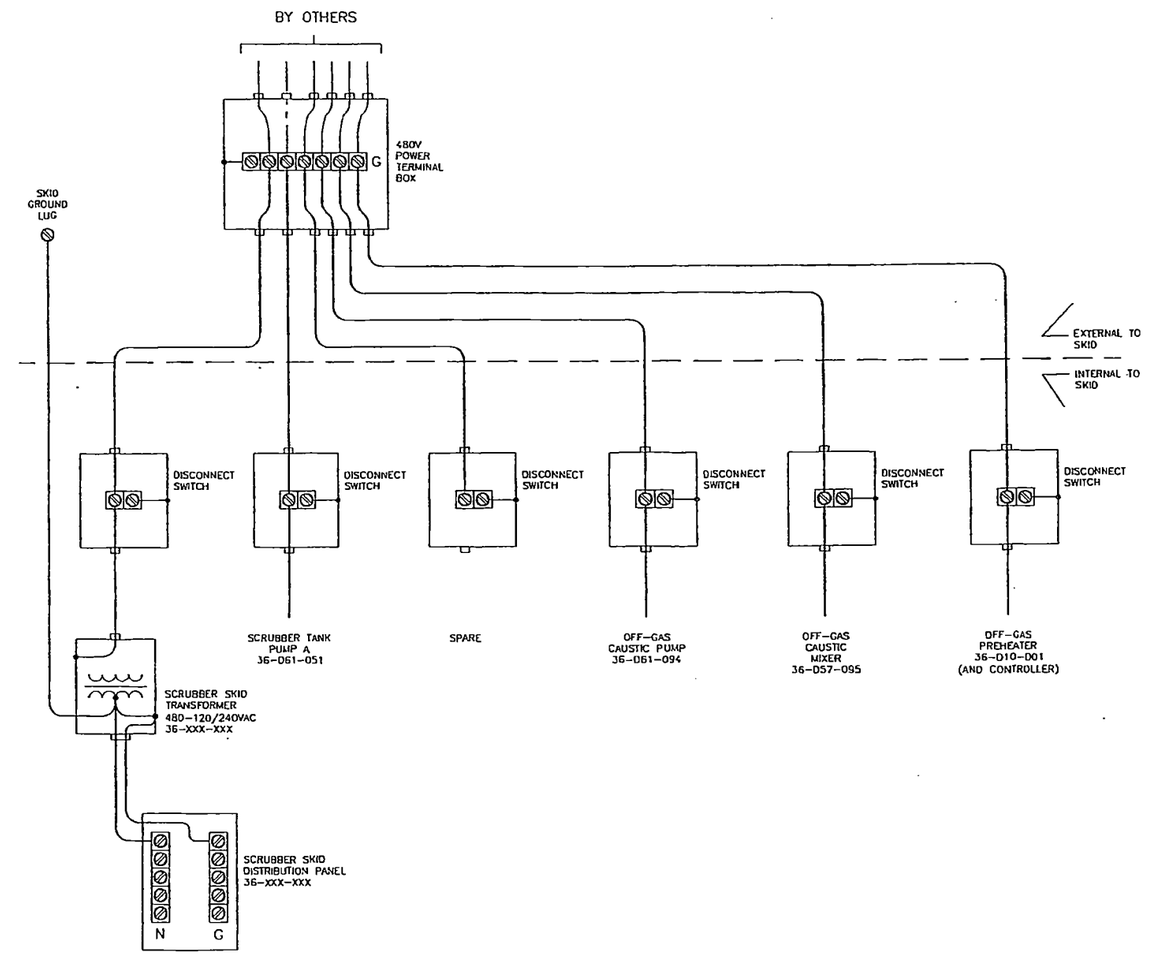

GROUNDING DIAGRAM

DMJM Technology

amec

DWG NO	TITLE
DRAWING TRACEABILITY LIST	

REF NUMBER	TITLE
REFERENCES	
NEXT USED ON END ITEM	

REV NO	DESCRIPTION	REV BY DATE	CHKD BY	ENGR CHKD	CHKD COMPANY
E	TECN EE-009	11/1/05	CBT	JL	DMJM H&N
A	RELEASED FOR INTERNAL REVIEW	8/12/04			

REVISIONS

NAME	DATE	COMPANY
DRAWN BY WB MONROE	10/1/05	DMJM
CHECKED B HICKMAN		DMJM
CONTROLS ENGINEER		
DESIGN ENGINEER		

AMEC PROJECT 145579-FINAL DBVS DESIGN

U.S. DEPARTMENT OF ENERGY
Office of River Protection

DBVS SCRUBBER SKID ONE-LINE & GROUNDING DIAGRAM

SIZE	BLDG NO	INDEX NO	DWG NO	REV
F	200W	7201 7301	DBVS-SK-E104	E

SCALE NONE SHEET 1 OF 1

M:\Designers\Thomasc\ADD WORKSPACE\A77977-E-104-1_A_1.dwg, 11/2/2005 10:10:30 AM, CBT

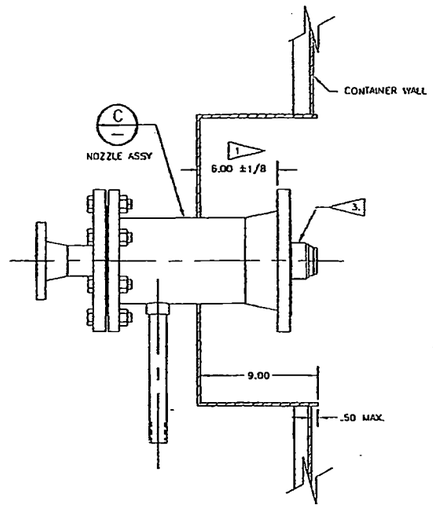

SECTION A–A

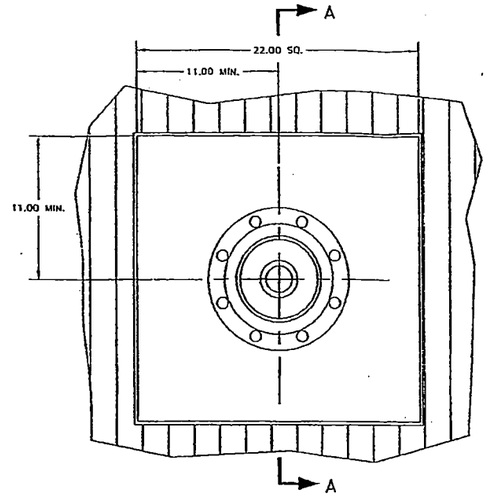

ELEVATION VIEW TYPE I

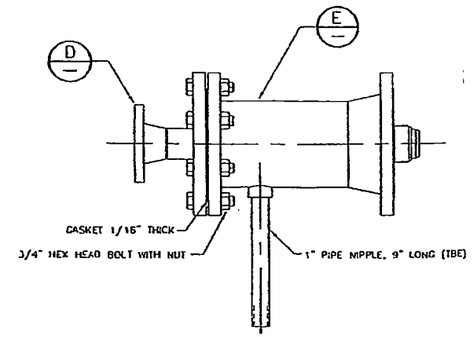

C NOZZLE ASSEMBLY

GENERAL NOTES:

1. CRITICAL DIMENSIONS
2. SEE PROCUREMENT SPECIFICATIONS FOR COMPONENT MATERIAL.
3. COVER AND PROTECT RIVERBEND CONNECTORS THROUGHOUT CONSTRUCTION, TRANSPORT AND STORAGE.

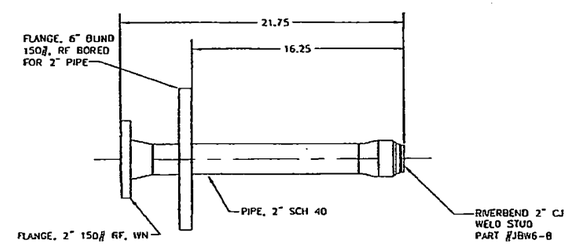

D DETAIL

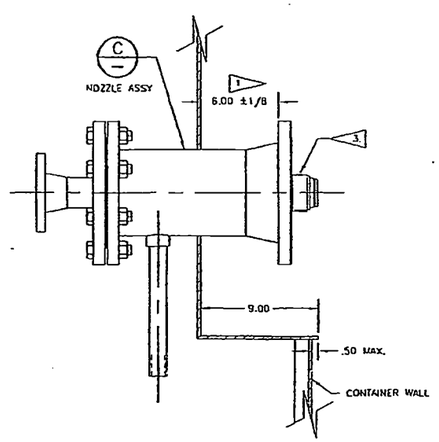

SECTION B–B

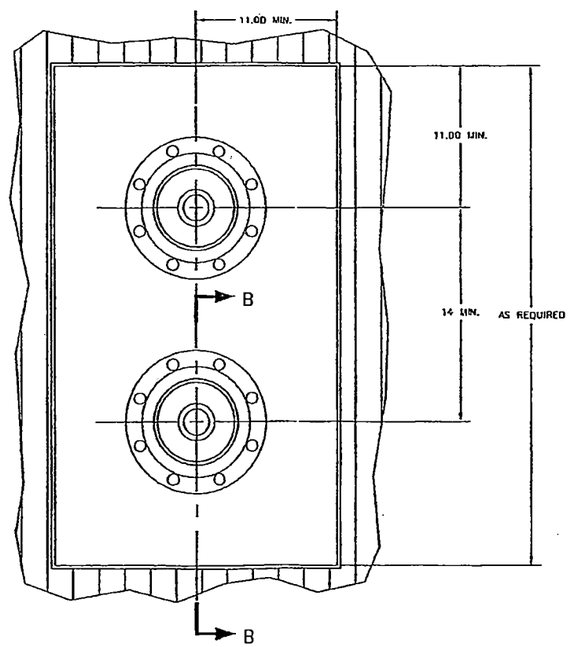

ELEVATION VIEW TYPE II

MULTIPLE HIHTL CONNECTIONS IN VERTICAL ORIENTATION. MAINTAIN MINIMUM CONNECTION SPACING.

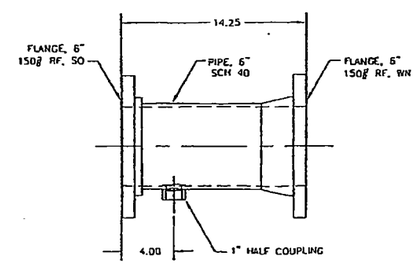

E DETAIL

DMJM Technology

amec

NAME	DATE
DRAWN BY WB MONROE	
STRESS BY	
CHECKED JOHN DUNN / PAUL GAU	
TECHNICAL REVIEW	
DESIGN AUTHORITY	

PROJECT 145579–FINAL DBVS DESIGN

U.S. DEPARTMENT OF ENERGY
Office of River Protection

BULK VITRIFICATION
HIHTL PENETRATION
DETAILS

SIZE F | BLDG NO 200W | DWG NO DBVS–SK–M103 | REV B

SCALE 3"=1" | SHEET 1 OF 2

DWG NO	TITLE
DRAWING TRACEABILITY LIST	

REF NUMBER	TITLE
REFERENCES	
NEXT USED ON END ITEM	

REV NO	REV BY	DESCRIPTION	REV BY	CHKD BY	APPD BY	DATE
REVISIONS						

DMJM technology

amec

TECHNICAL SPECIFICATION

PROJECT:	Final DBVS Design	145579-D-SP-037	REV. 1
PROJECT NO.:	145579	WET SCRUBBER SKID ASSEMBLY DESIGN AND FABRICATION	
CLIENT:	AMEC E&E - Richland, Washington		

Appendix B

ASME AG-1 Compliance Requirements

(57 pages including cover)

ASME-AG-1-2003 CODE ON NUCLEAR AIR AND GAS TREATMENT COMPLIANCE REQUIREMENTS

Source	Requirement Text	Verification/ Validation R- Review A-Analysis T-Test I-Inspection	Document Reference (Where requirement is incorporated)
AA	COMMON ARTICLES		
AA-1100	INTRODUCTION		
AA-1100 To AA-1130	SCOPE (AA-1100) – Purpose; Applicability; Definitions and Terms		
AA-2000	REFERENCED DOCUMENTS	NA	
	Referenced Documents	NA	
AA-3000	MATERIALS	NA	
AA-3000	Materials	R	
AA-4000	STRUCTURAL DESIGN		
AA-4100 To AA-4243	SCOPE (AA-4100) – Environmental Qualification DESIGN (AA-4200) – Loads Criteria; Stress Criteria, Deflection Criteria; Other Criteria		
	Design in accordance with the specification; these requirements are applicable to equipment housings and ductwork.		
AA-4300 To AA-4342	DESIGN OF EQUIPMENT SYSTEMS AND THEIR SUPPORTING ELEMENTS (AA-4300) – General Requirements; Design Verification of Plate - and Shell-Type Components and Their supporting Elements; Design Verification of Linear-Type Systems by Analysis, Functionability Requirements		
	Design in accordance with the specification; these requirements are applicable to equipment housings and ductwork.		
AA-4350 To AA-4358	DESIGN OF EQUIPMENT SYSTEMS AND THEIR SUPPORTING ELEMENTS (AA-4300) - Design Verification by Testing	NA	
	Show by analysis in accordance with the specification. The requirements are applicable to equipment housings and ductwork.		
AA-4360	DESIGN OF EQUIPMENT SYSTEMS AND THEIR SUPPORTING ELEMENTS (AA-4300) - Design of Bolts		
	Design in accordance with the specification; these requirements are applicable to equipment housings and ductwork.		
AA-4400 to AA-4443	DOCUMENTATION REQUIREMENTS (AA-4400) – Certification of Design Verification; Equipment Description; Safety Related Features; Report Content		
	These requirements are applicable to equipment housings and ductwork.		
AA-5000	INSPECTION AND TESTING		
AA5110 to AA-5300	GENERAL (AA-5100) – Scope and Applicability; Responsibility for Procedures; Measuring and Test Equipment Visual Inspection (AA-5200) – Scope; Description of Method; Requirements; Inspection Checklist; Reports Welded Connections (AA-5300)		
	These requirements are applicable to equipment housings and ductwork.		
AA-5400 To AA-5420	BOLTED CONNECTIONS (AA-5400) – Before Bolting; After Bolting		
	These requirements are applicable to equipment housings and ductwork.		
AA-5500	FABRICATION TOLERANCES (AA-5500)		
	These requirements are applicable to equipment housings and ductwork.		
AA-5600 To AA-5800	PRESSURE AND LEAK TESTING (AA-5600) PERFORMANCE AND FUCTIONAL TESTING (AA-5700) ~~SEISMIC TESTING (AA-5800)~~		

ASME-AG-1-2003 CODE ON NUCLEAR AIR AND GAS TREATMENT COMPLIANCE REQUIREMENTS

Source	Requirement Text	Verification/ Validation R- Review A-Analysis T-Test I-Inspection	Document Reference (Where requirement is incorporated)
	These requirements are applicable to equipment housings and ductwork.		
AA-6000	FABRICATION, JOINING, WELDING, BRAZING, PROTECTIVE COATING, AND INSTALLATION		
AA-6110 To AA-6130	GENERAL (AA-6100) – Scope and Applicability; Materials; Control of Fabrication and Installation Processes		
	These requirements are applicable to equipment housings and ductwork.		
AA-6200 To AA-6230	FABRICATION PROCESS (AA-6200) – Cutting; Forming and Bending; Forming Tolerances; Fitting and Aligning		
	These requirements are applicable to equipment housings and ductwork.		
AA-6240	FABRICATION PROCESS (AA-6200) – Welded Joints		
	These requirements are applicable to equipment housings and ductwork.		
AA-6250 To AA-6258	FABRICATION PROCESS (AA-6200) – Mechanical Joints		
	These requirements are applicable to equipment housings and ductwork.		
AA-6300 to AA-6336	WELDING REQUIREMENTS (AA-6300) - General; Workmanship; Inspection and Testing of Welds		
	These requirements are applicable to equipment housings and ductwork.		
AA-6400 To AA-6434.1	BRAZING (AA-6400) - General; Workmanship; Cleaning; Inspection and Testing		
	These requirements are applicable to equipment housings and ductwork.		
AA-6500 To AA-6560	CLEANING AND COATING (AA-6500) – General; Surface Preparation; Coating; Repair of Coating System; Inspection; Quality Assurance Requirements and Documentation		
	These requirements are applicable to equipment housings and ductwork.		
AA-6600 To AA-6610	INSTALLATION REQUIREMENTS (AA-6600) – Handling and Rigging		
	These requirements are applicable to equipment housings and ductwork.		
AA-6620 To AA-6630	INSTALLATION REQUIREMENTS (AA-6600) – Field Assembly & Temporary Field Attachments		
	These requirements are applicable to equipment housings and ductwork.		
AA-7000	PACKAGING, SHIPPING, RECEIVING, STORAGE, AND HANDLING		
AA-7100 To AA-7410	GENERAL (AA-7100) – Scope and Applicability; Responsibility GENERAL REQUIREMENTS (AA-7200) – Planning, Procedures, and Instructions; Personnel Qualifications; Classification of Items PACKAGING (AA-7300) – General; Level of Packaging SHIPPING (AA-7400) - General		
	Documentation verifying compliance with NQA-1 is not required. This requirement shall be met in accordance with Tank Farm Contractor QAPD procedures.		
AA-8000	QUALITY ASSURANCE		
AA-8100 To AA-8130	GENERAL (AA-8100) – Scope and Applicability; Responsibility; Responsibilities of Fabricators, Material Suppliers, and Material Manufacturers		

ASME-AG-1-2003 CODE ON NUCLEAR AIR AND GAS TREATMENT COMPLIANCE REQUIREMENTS

Source	Requirement Text	Verification/ Validation R- Review A-Analysis T-Test I-Inspection	Document Reference (Where requirement is incorporated)
	The manufacturer(s)'s quality assurance (QA) program shall meet the requirements of ASME NQA 1 or may be based on another accepted industry standard that meets the requirements of ASME NQA-1. *The tank farm contractor evaluates vendor QA programs for acceptability. Vendor QA programs can be based on QA program requirements other than ASME NQA-1 as long as the vendor's QA program is shown by evaluation to be equivalent to being based on NQA-1. As the requirement is stated, the quality assurance program do not have to be certified in accordance with ASME NQA -1, as long as the requirements specified as applicable in procurement documentation are addressed. The tank farm contractor has a quality assurance program compliant with ASME NQA-1 and has experience in evaluating quality assurance programs. The tank farm contractor's graded approach causes consideration of the ASME AG-1 requirements for quality assurance, and is used to establish the applicable QA program requirements passed to vendors in procurement documents. Guidance on the use of a graded approach to quality is provided in ASME NQA-1, Appendix 2A-2, Section 502.* *QA program requirements are flowed down to vendors through procurement documents. Additional quality assurance requirements of specific items are passed on by the tank farm contractor as applicable.* *The tank farm contactor has procedures in place for assuring fabricators, material suppliers, and material manufacturers deliver the intended product. Records and documentation for QA program compliance are generated and retained in accordance with the tank farm contractor's QA program.*		
AA-8200 To AA-8300	IDENTIFICATION AND CONTROL OF ITEMS (AA-8200) – Documentation; Identification and Completed Item; Marking Requirements for Small Products; ~~Certified Material Test Reports~~; Records of Examinations and Tests QUALITY ASSURANCE RECORDS (AA-8300) This requirement shall be met in accordance with the specification and Tank Farm Contractor QAPD procedures. Control of welding filler metal shall be in accordance with approved welding procedures. Certified Material Test reports are not required.		
AA-9000	NAMEPLATES AND STAMPING		
AA-9110 To AA-9140	GENERAL (AA-9100) – General; Requirements; Attachment of Nameplates; Location of Nameplates *This requirement shall be met in accordance with this specification and Tank Farm Contractor procedures. Manufacturer's standard nameplates shall be required. Information required by ASME AG-1, such as capacity and operating temperature and pressure may be impractical for manufacturers to include on component nameplates. Standard nameplates include adequate information necessary to verify correct installation, such as make, model number, and serial number. This information also allows traceability to additional technical information, if required, during system operation.* *Nameplates attachments by standard industrial practices follow this requirement. During assembly, any nameplate that interferes with operation is relocated as appropriate.* *Nameplates may not be shown on drawings. Showing the nameplate location on manufacturer's drawings may be impractical. Compliance with the other provisions of this section ensures adequate accessibility to the nameplate.*		

ASME-AG-1-2003 CODE ON NUCLEAR AIR AND GAS TREATMENT COMPLIANCE REQUIREMENTS

Source	Requirement Text	Verification/ Validation R- Review A-Analysis T-Test I-Inspection	Document Reference (Where requirement is incorporated)
DA	DAMPERS AND LOUVERS		
DA-1000	SCOPE		
	This section encompasses the minimum requirements for the design, fabrication, materials, performance, acceptance testing, and quality assurance, as well as component nomenclature, for dampers and louvers used as components in nuclear safety-related air or gas treatment systems in nuclear facilities. Also included in this section are minimum design specification requirements for actuators and other control-related accessories used in conjunction with nuclear safety-related dampers and louvers.		
DA-1100	Purpose: The purpose of this section is to identify and establish the requirements for the design, manufacture, shop test and installation of dampers and louvers for use in air and gas treatment systems which are associated with nuclear facilities. This section further identifies and establishes requirements for the installation of actuators and accessories and for the performance of a damper and louver assembly.		
DA-1200	LIMIT		
DA-1210	Exclusion of Items: Valves whose design, manufacture, test, and installation are covered by the ASME Code, Section III, or ASME B31.1, are excluded from this section even though they may be used to perform the function of a damper.		
DA-1220	Exclusion of Specific Designs: While certain minimum functional requirements of damper actuators and accessories are included in this section, it is not intended to include specific dimensional or material design requirements for these items.		
DA-1230	Boundary Limits: The requirements of this Code are limited to those parts which comprise a damper or louver assembly as defined in DA-1310. While general requirements are included for mating flanges and similar supports, the boundary limits are the damper or louver assembly, flange, or frame.		
DA-1300	DEFINITIONS AND TERMS		
DA-2000	REFERENCED DOCUMENTS		
DA-3000	MATERIALS		
DA-3100	ALLOWABLE MATERIALS		
DA-3110	Materials of Construction: Materials used in the construction of frames, blades, shafts, and linkages shall conform to requirements of specifications for materials given in Table DA-3110.		
DA-3120	Allowable Stress: Allowable stress values for the design of frames, blades, shafts, and linkages are specified in Article AA-4000. At temperatures above 650 °F (343 °C) for ferrous material or 200 °F (93 °C) for nonferrous material, the special limitations cited in DA-3211 shall apply.		
DA-3130	Bearing Materials: Bearing materials shall conform to the requirements of DA-4250.		
DA-3140	Seal Materials: Seal materials shall conform to the requirements of DA-4260.		
DA-3200	SPECIAL LIMITATIONS ON MATERIALS		
DA-3210	METALS		
DA-3211	Physical Properties Reduction		
DA-3212	Galvanic Corrosion		
DA-3213	Corrosive Vapors		
DA-3220	Nonmetallic Materials		
DA-3230	Deterioration of Materials in Service		

ASME-AG-1-2003 CODE ON NUCLEAR AIR AND GAS TREATMENT COMPLIANCE REQUIREMENTS

Source	Requirement Text	Verification/ Validation R- Review A-Analysis T-Test I-Inspection	Document Reference (Where requirement is incorporated)
DA-3300	Certification of Materials: The Manufacturer shall make available, as a minimum, ~~certified test reports of chemical and physical properties of material and hardware for stress components such as related accessories including frames, blades, shafts, and linkages.~~ For those ASTM materials which do not have physical testing required by the ASTM specification, testing should be performed per ASTM A370. All ~~other~~ components used in the construction of the damper shall be provided with a manufacturer's certificate of compliance covering the ASME or ASTM material specification, grade, and class, if applicable.		
	Damper materials shall be in conformance with the allowable materials of ASME AG-1, Table DA-3100. Manufacturer's Certificates of Conformance with the ASME or ASTM designations of Table DA-3100 shall be provided. Certified test reports shall not be required.		
DA-4000	DESIGN		
DA-4100	General Design: Design of dampers and louvers shall be in accordance with the requirements of Section DA and of those portions of Section AA invoked in Section DA.		
DA-4110	Requirements of Design Specification: Design specifications prepared by the Owner or his designee in sufficient detail to provide a complete basis for design and manufacture in accordance with this Code shall include, as applicable:		
DA-4120	DA-4120, Requirements of the Manufacturer: When required by the design specifications, documentation provided by the Manufacturer to the Owner or his designee shall include the following, as applicable: (a) through (o)		
DA-4130	PERFORMANCE REQUIREMENTS		
DA-4131	Seat Leakage: Seat leakage shall be equal to or less than the amount shown in Mandatory Appendix DA-I for the class specified in the design specification.		
DA-4132	Frame leakage: Frame leakage shall be equal to or less than the amount shown in Mandatory Appendix DA-I for the class specified in the design specification.		
DA-4133	Pressure drop: Pressure drop shall be less than or equal to that stated in the design specification at the design volumetric flow rate.		
DA-4131	Fire Ratings		
DA-4135	Fire Damper Closure		
DA-4136	Cycle Time		
DA-4200	TECHNICAL REQUIREMENTS		
DA-4210	STRUCTURAL		
DA-4211	Dampers or louvers shall be designed in accordance with the structural requirements given in AA-4000. Structural requirements and load definitions are given in DA-4212 through DA-4214.		
DA-4210	Support Boundary		
DA-4212.1	Methods of Support. A damper or louver assembly may be supported by one or more of several methods. It may be line supported as an assembly inserted into a run of duct; it may have its support at its end attachments to the duct and be totally supported by that line of duct; or it may be flange mounted to a bulkhead type of building structure or auxiliary structure.		
DA-4212.1 (a)	Line Supported Assembly		
DA-4212.1 (b)	Bulkhead or End Supported Assembly		
DA-4212.1 (c)	Side, Top, or Bottom Supported Assembly		

ASME-AG-1-2003 CODE ON NUCLEAR AIR AND GAS TREATMENT COMPLIANCE REQUIREMENTS

Source	Requirement Text	Verification/ Validation R- Review A-Analysis T-Test I-Inspection	Document Reference (Where requirement is incorporated)
DA-4212.2	Documentation: The damper or louver Manufacturer shall be responsible for providing all information necessary to define the support boundary interfaces. The interface control information to be specified shall include but not necessarily be limited to the following:		
DA-4212.2 (a)	Identification of any special support requirements as well as the configuration and size of the damper flanges;		
DA-4212.2 (b)	magnitudes and directions of all loads imposed on the anchorage points, including all static, dynamic, and operational loads resulting from the installed assembly. Load data shall be provided in a form which shall allow combinations to be considered as required in Article AA 4000.		
DA-4212.2 (c)	Other information, such as bending moments, shear forces, axial loads, torsional moments, or stiffness requirements necessary to assure that the damper or louver can perform its required safety function under all design conditions		
DA-4213	Loads (entire section): Loads to be considered are as given in AA-4211 and AA 4212 with the following clarifications		
DA-4213.1 DA-4213.2 DA-4213.3	Normal Loads Thermal Loads Other Loads		
DA-4214	Structural Verification: The technical and documentation requirements of AA-4000 shall apply to verification of design by analysis, test, or comparison.		
DA-4215	Special Considerations		
DA-4220	Thermal Expansion		
DA-4230	TORQUE		
DA-4231	Torque Determinations: In determining the torque required to actuate the blades, the Manufacturer shall consider the blade position and direction of the applied torque to produce the desired movement. At the maximum specified operating pressure this determination shall include, as a minimum, the following torque components: a) breakaway torque b) dynamic torque c) friction torque d) seating torque		
DA-4232	Actuator torque: The Actuator and associated linkage shall deliver to the damper or louver a minimum of 1-1/2 times the maximum torque as determined in DA-4231, except for self-contained actuators used to counterbalance a specific force, and must be designed to match the required torque. Actuators shall be evaluated in both directions for the maximum torque, at the beginning of the blade movement, while stroking the blades through the full range of movement.		
DA-4240	LINKAGE		
DA-4241	Linkage Components		
DA-4242	Linkage Design: Linkage design shall include the following minimum requirements:		
DA-4242 (a)	Brackets, arms, and levers shall be of a length and stiffness to provide stable operation of the blades at the maximum specified operating pressure and airflow without flutter or binding at all blade positions.		
DA-4242 (b)	The linkage system shall be designed to transmit sufficient torque to each blade to set the seals of each and every blade at the maximum specified operating pressure and airflow to limit leakage to less than the specified leakage.		
DA-4242 (c)	All linkage components shall be designed to transmit a minimum of 1-1/2 times the torque required by DA-4231 without exceeding the allowable stress listed in Article AA-4000.		

ASME-AG-1-2003 CODE ON NUCLEAR AIR AND GAS TREATMENT COMPLIANCE REQUIREMENTS

Source	Requirement Text	Verification/ Validation R-Review A-Analysis T-Test I-Inspection	Document Reference (Where requirement is incorporated)
DA-4242 (d)	If a linkage system is designed to be field adjustable, suitable locking devices such as jam nuts, etc., shall be provided.		
DA-4242 (e)	The linkage system shall be designed to be compatible with the actuator selected for the application.		
DA-4250	BEARINGS		
DA-4251	General Application		
DA-4251 (a)	Bearings shall permit axial shaft movement to provide for operating clearances and differential expansion in both vertical and horizontal installations.		
DA-4251 (b)	Bearing materials shall be selected for the loading and environmental conditions to which the bearings will be subjected.		
DA-4252	Bearing Types		
DA-4252.1	Metallic Sleeve Bearings		
DA-4252.2	Nonmetallic Sleeve Bearings		
DA-4252.3	Rolling Element Bearings		
DA-4253	Bearing Design		
DA-4253 (a)	Bearing running surfaces of sleeve bearings shall have a finish as recommended by the bearing Manufacturer.		
DA-4253 (b)	Sleeve bearings shall be contained to prevent axial displacement and to prevent rotational movement except between the intended bearing surfaces.		
DA-4253 (c)	Sleeve bearings shall have a bearing load surface diameter difference as recommended by the bearing Manufacturer.		
DA-4253 (d)	Sleeve bearing wall thickness shall be as recommended by the bearing Manufacturer.		
DA-4253 (e)	Rolling element bearings shall be sized to allow bearings to be slipped onto the shaft. The maximum clearance in shaft diameter shall be as recommended by the bearing Manufacturer, plus clearance for thermal expansion.		
DA-4254	Bearing Loading		
DA-4254 (a)	Sleeve bearing loading on		
DA-4254 (b)			
DA-4254 (c)			
DA-4254 (d)			
DA-4254 (e)			
DA-4260	SEALS		
DA-4261	General: Seals may be utilized to reduce seat leakage and frame leakage to the degree required by the design specification. The control of seat leakage requires seals such as metal or elastomer blade edges, stops, or seats. Control of frame leakage may require shaft seals such as stuffing boxes or cover plates.		
DA-4262	Design		
DA-4263	Material		
DA-4270	FRAME CONSTRUCTION		
DA-4271	Frame Construction Class A or B		
DA-4272	Gasket and Packing Material Requirements		
DA-4280	MOUNTING OF ACTUATORS AND ACCESSORIES		
DA-4281	Mounting Structure		
DA-4282	Accessibility		
DA-4283	Mounting Structure Material: The structure for mounting actuators and accessories shall be fabricated of material listed in Table DA-3 I 10. Structures shall be designed as required by Article AA-4000.		
DA-4284	Attachment of Actuators and Accessories: Actuators and accessories shall be attached to the mounting structure with removable fasteners, of materials listed in Table DA 3 110, sized to conform to the stress limitations stated in Article AA-4000.		

ASME-AG-1-2003 CODE ON NUCLEAR AIR AND GAS TREATMENT COMPLIANCE REQUIREMENTS

Source	Requirement Text	Verification/ Validation R- Review A-Analysis T-Test I-Inspection	Document Reference (Where requirement is incorporated)
DA-4285	Linkage Adjustability: The actuator mounting or linkage shall per adjustment to achieve the required positioning of the blades at each end of the actuator movement.		
DA-4300	ACTUATORS		
DA-4310	POWER-OPERATED ACTUATORS		
DA-4311	Torque Required		
DA-4312	Forces and Loads on Actuators		
DA-4313	Acceleration and Deceleration Loads		
DA-4314	Actuator Voltage or Pressure Load Rating		
DA-4315	Power Actuator Specification Requirements		
DA-4320	Manual Actuators: Manual actuators should be equipped with locking devices and position indicators.		
DA-4321	Torque Requirements: Manual actuators shall be capable of delivering the torque required by DA-4232. Manual actuator components shall be sized as required by Article AA-4000.		
DA-4322	Forces and Loads on Actuators		
DA-4323	Maximum Input Forces		
DA-4330	Self-Contained Actuators		
DA-4340	Heat- or Temperature-Operated Actuators		
DA-4400	ACCESSORIES		
DA-4410	Accessory Requirements: As required by the design specification, the damper or louver assembly shall be provided with appropriate accessory equipment to provide proper function and performance of the assembly.		
DA-4420	Auxiliary Energy Source: When required by the design specification, actuators shall be provided with an auxiliary energy source, such as springs, counterweights, or accumulators.		
DA-4430	Modulating Actuator Requirements: When required by the design specification, actuators for modulating service shall be provided with a pilot positioner or similar device to assure controlled positioning of the damper in response to the control signal.		
DA-4440	Position Indicators: When required by the design specification, local position indicators shall be provided to enable surveillance and operability verification.		
DA-4450	Environmental Design Requirements: Electrical devices such as position indicating switches, limit switches, and all other electrical components shall comply with the applicable IEEE standards stated in the design specification. All other pneumatic, hydraulic, or other type of accessories shall be suitable for the environment specified in the design specification.		
DA-4460	Piping of Pneumatic Actuators:		
DA-4470	Electrical Wiring Requirements		
DA-5000	INSPECTION AND TESTING		
DA-5000	Inspection and testing of louvers and dampers shall be in accordance with the requirements of this Article and of AA 5100, AA-5200, AA-5300, AA-5410, AA-5500, and AA 5800. The Manufacturer shall be responsible for establishing the written visual examination procedures and necessary tolerances to ensure that the products are built to the Manufacturer's drawings. Examination procedures shall include appropriate checklists to verify that the required observations were performed. Written reports of visual inspection shall contain, as a minimum, the requirements of AA 5200.		
DA-5100	Testing		
DA-5110	Pressure Drop Testing		
DA-5120	CYCLE TIME AND CYCLE REPETITION		
DA-5121	Required Cycles:		
DA-5122	Pneumatic Air Pressure:		
DA-5123	Cycle Time:		

ASME-AG-1-2003 CODE ON NUCLEAR AIR AND GAS TREATMENT COMPLIANCE REQUIREMENTS

Source	Requirement Text	Verification/ Validation R- Review A-Analysis T-Test I-Inspection	Document Reference (Where requirement is incorporated)
DA-5124	Operational Requirements		
DA-5130	Frame Leakage Testing for Frame Leakage Classes A and B		
DA-5140	Seat Leakage Testing		
DA-5141	Seat Leakage Test for Leakage Class 0 Dampers (Bubble Method)		
DA-5142	Seat Leakage Test for Leakage Class II or III Dampers or Louvers		
DA-5143	Seat Leakage Test for Leakage Class I Dampers		
DA-5144	Fire Damper Closure Test		
DA-6000	FABRICATION, FINISHING, AND INSTALLATION		
DA-6000	Fabrication, Finishing, and Installation – General: Article AA-6000 shall apply for fabrication, finishing, and installation, except that the design and seismic qualifications of the damper assembly are based on the damper assembly being adequately supported for the appropriate loads. The Owner or his designee shall provide supports for the damper assembly to ensure that the damper is adequately supported as required by the Manufacturer's requirements and DA-4212. All of the welding codes or standards listed are allowed. In addition, installation of Underwriters Laboratory (UL) fire dampers shall be in accordance with the Manufacturer's UL installation instructions.		
DA-6100	Welding and Brazing: Specific welding and brazing parameters shall conform to the requirements of Article AA-6000.		
DA-7000	PACKAGING, SHIPPING, AND STORAGE		
DA-7000	Packaging, shipping, and storage of damper and louver assemblies shall be in accordance with the requirements of Article AA-7000. Implementation requires an ANSI /ASME NQA-2 classification level for packaging, shipping, receiving, storage, and handling of all items. Packaging, shipping, and storage of damper and louver assemblies shall be in accordance with Article AA-7000. Implementation requires an ANSI/ASME NQA-2 classification level for packaging, shipping, receiving, storage, and handling of all items. Such classification is as follows: (a) dampers or louvers only: Level C (b) electric actuator: Level B (c) actuator, other than electric: Level C (d) accessories: Level B (e) dampers or louvers with electric actuators or accessories: Level B *Manufacturer's recommended practices in accordance with procurement documents and procurement procedures that incorporate the features of this section as applicable.*		
DA-8000	QUALITY ASSURANCE		
DA-8000	Quality Assurance of dampers and louvers shall be in accordance with the requirements of Section DA and Article AA-8000.		
DA-8100	Damper and Louver Performance: Documentation shall be established to verify that damper and louver performance complies with the testing criteria of DA-5000.		
DA-8300	Quality Assurance Records		
DA-9000	NAMEPLATES, STAMPINGS, AND MANUALS		

ASME-AG-1-2003 CODE ON NUCLEAR AIR AND GAS TREATMENT COMPLIANCE REQUIREMENTS

Source	Requirement Text	Verification/ Validation R-Review A-Analysis T-Test I-Inspection	Document Reference (Where requirement is incorporated)
DA-9000	Article AA-9000 requirements for nameplates, stampings, and manuals shall apply, except that the nameplate shall require only the following information: (a) Manufacturer's name (b) Equipment, tag, or mark number information as supplied by the purchaser (c) Size All items manufactured under the requirements of this Section shall be identified to assure compliance with the requirements of Subarticle AA-8200, and Subarticles AA-9130 and AA-9140. Records, as necessary to assure compliance with Sub-article AA-8200, shall be maintained by the responsible organization in accordance with the approved quality assurance program.		
DA-9100	Nameplates and Stampings:		
DA-9200	Manuals:		

ASME-AG-1-2003 CODE ON NUCLEAR AIR AND GAS TREATMENT COMPLIANCE REQUIREMENTS

Source	Requirement Text	Verification/ Validation R- Review A-Analysis T-Test I-Inspection	Document Reference (Where requirement is incorporated)
SA	SECTION SA: Ductwork		
SA-1000	INTRODUCTION		
SA-1100 SA-1110 SA-1120 SA-1130	Scope: This section provides requirements for the performance, design, construction, inspection, shop and field fabrication acceptance testing, and quality assurance for ductwork, including ductwork accessories, ductwork supports, and duct-mounted equipment supports, used in nuclear safety-related air treatment systems in nuclear facilities. Purpose: This section establishes requirements for ductwork and ductwork supports to ensure system performance and reliability under all required conditions of operation and postulated events. Applicability: This section applies only to ductwork and accessories, plenums, and ductwork supports. It does not cover sizing of complete air handling systems or any operating characteristics of such systems. Ductwork interface points, as applied to this section, are shown in Fig. SA-1 120. Definitions and Terms:		
SA-2000	REFERENCED DOCUMENTS		
SA-2000	Referenced Documents	NA	
SA-3000	MATERIALS		
SA-3100	General: For components of ductwork and ductwork supports, the supplier shall make available, (as a minimum) ~~certified test reports of chemical and physical properties.~~ For those ASTM materials, which do not have physical testing required by the ASTM specification, tensile testing shall be performed per ASTM A370. All ~~other~~ components used in the construction of ductwork shall be provided with a manufacturer's Certificate of Compliance covering the ASME, ASTM, or other material specification, grade, and class, if applicable.		
SA-3200	Material Substitution: Measures shall be established for controlling and identifying material substitutions throughout the manufacturing and installation process.		
SA-3300	Material Testing: When required by the Design Specification, material shall be tested in accordance with the applicable material specification. Supplemental material testing, when required, shall be performed in accordance with Article AA-3000.		

ASME-AG-1-2003 CODE ON NUCLEAR AIR AND GAS TREATMENT COMPLIANCE REQUIREMENTS

Source	Requirement Text	Verification/ Validation R- Review A-Analysis T-Test I-Inspection	Document Reference (Where requirement is incorporated)
SA-3400	Material Specifications: Material for ductwork and ductwork supports shall be capable of meeting all requirements of Article SA-4000. Materials shall be in conformance with the ASTM materials listed in Table SA-3400-1. Substitute materials shall be equivalent, or exceed the requirements of Table SA-3400-1, as determined by the Engineer. Materials selected shall be evaluated for suitability with service conditions and compatibility with other materials used in duct construction. The ASTM numbers in Table SA-3400-1 designate a chemical composition and a material thickness limit. A grade designation is usually required to determine the minimum strength of the material. If the specific grade material has an assigned minimum yield and tensile strength, these values shall be used for design purposes. If values have not been established and assigned, then tests in accordance with the procedures outlined in Article AA-3000 shall be performed to ensure that the strength of the material meets the required design stress values. Materials listed in Table SA-3400-1 under "Carbon Steel Plates and Sheets" when coated in Accordance with "Zinc Coatings," shall be allowable under "Galvanized Steel Plates and Sheets." Materials listed under "Carbon Steel Structural Members" and "Carbon Steel Bolts and Nuts" shall be coated in Accordance with "Zinc Coatings" when used in conjunction with materials listed under "Galvanized Steel Plates and Sheets."		
SA-3400	Material listed in Table SA-3400-1 under "Carbon Steel Plates and Sheets" when coated in accordance with "Zinc Coatings" shall be allowable under "Galvanized Steel Plates and Sheets." Materials listed under "Carbon Steel Structural Members" and "Carbon Steel Bolts and Nuts" shall be coated in accordance with Zinc Coatings" when used in conjunction with materials listed under "Galvanized Steel Plates and Sheets."		
SA-4000	DESIGN		
SA-4100	General: Ductwork and ductwork supports shall be designed in accordance with the requirements of Article AA-4000 and this Section.		
SA-4200	Design Criteria—Load Criteria		
SA-4211	Additional dynamic loads (ADL), dead weight (DW), design pressure differential (DPD), design wind (W), external loads (EL), normal operating differential pressure (NOPD), and system operational pressure transient (SOPT) as defined in AA-4211		
SA-4211 (a)	Constraints of free end displacement load (T): These are loads caused by thermal movement. When duct construction utilizes gasketed companion angle construction, effects of T for normal operations may be ignored. For postulated accident conditions, a review of the effect of T is necessary.		
SA-4211 (b)	Fluid momentum load (FML): This is as defined in AA-4211 with the following clarification: Ductwork shall be designed to withstand the FML resulting from air turbulence, often found in sections following fan discharges, and certain dampers and duct fittings. The termination of such sections is marked by the length of straight ductwork required to regain uniform airflow as given by AMCA 201 Fig 20:	NA	
SA-4211 (c)	Live load (L): Live loads shall be defined in the Design Specification. The live load shall not be less than a construction manload of 250 pounds. The load shall be applied at the mid-span of the duct, or midpoint of a stiffener, or within a panel. When applied to a panel, the load shall be assumed to be distributed over 10 square inches.		

ASME-AG-1-2003 CODE ON NUCLEAR AIR AND GAS TREATMENT COMPLIANCE REQUIREMENTS

Source	Requirement Text	Verification/ Validation R- Review A-Analysis T-Test I-Inspection	Document Reference (Where requirement is incorporated)
SA-4211	Normal Operating Pressure Differential (NOPD): For ease of design, a duct system may be designed using one pressure value that envelopes NOPD and SOPT (AA-4211). NOPD and SOPT may be positive or negative pressures. Worse case shall be considered in the design.		
SA-4211	Seismic loads (SL): Loads that are the result of the envelope of the operating basis earthquake (OBE) and the safe shutdown earthquake (SSE). As overall system functionalism is not generally compromised by loads from the OBE, the SSE will govern the design. As an option, the OBE, and SSE may be considered separately with the OBE loads used for the Level B load combination. The horizontal and vertical components of the seismic excitation shall be applied simultaneously in the direction that will produce worst-case stresses and deflections. These components may be combined by the square root of the sum of the squares (SRSS) method.		
SA-4211	Hydrostatic loads from accumulated condensate, water deluge systems, or moisture separators: The hydrostatic load shall be conservatively established by documented analysis base on ductwork configuration, accessories, and component function. Hydrostatic load shall be added to the dead weight as applicable.		
SA-4211	Design Pressure Differential (DPD): The dynamic pressure loads resulting from a design basis accident (DBA), intermediate break accident (IBA), or small break accident (SBA). Generally, HVAC should be routed outside the local pipe break affected area. If HVAC is subjected to these loads, the Design Specification (SA-4600) shall address the station specific design requirements considering a Service Level D combination.	NA	
SA-4211	For component load criteria see the following sections: (1) HEPA filters – FC-4300 (2) Mounting frames – FG-4200 (3) Fans – BA-4000 (4) Dampers – DA-4000 (5) Refrigeration equipment – RA-4000 (6) Conditioning – CA-4000 (7) Moisture separators – FA-4000 (8) Pre-filters – FB-4000 (9) Instrumentation – IA-4000		
SA-4212	Ductwork Load Combinations: The applicable component loading shall be combined in accordance with Table SA-4212.	NA	
SA-4214	Design and Service Limits: The requirements of AA-4214 apply.	NA	
SA-4215	Ductwork Support Loads: Loads per SA-4211 for L, NOPD, SL DW, EL, and ADL shall also be used for duct supports. Hydrostatic loads shall be treated as DW load when the loads have an effect on the supports. Hydrostatic loads as defined in para. SA-4211 (g) shall be treated as a DW load when the loads have an effect on the supports. The fluid momentum load as defined in para. SA-4211 (c) is not typically a significant load for supports and may be neglected.		
SA-4216	Ductwork Support Load Combinations: The applicable support shall be combined in accordance with Table SA-4216.		
SA-4220	Stress Criteria: The ductwork stress shall be based upon the AISI "Specifications for the Design of Cold Formed Steel Structural Members." The ductwork support stress shall be based upon the AISC "Specification for the Design, Fabrication and erection of Structural Steel for Buildings."		

ASME-AG-1-2003 CODE ON NUCLEAR AIR AND GAS TREATMENT COMPLIANCE REQUIREMENTS

Source	Requirement Text	Verification/ Validation R- Review A-Analysis T-Test I-Inspection	Document Reference (Where requirement is incorporated)
SA-4220	Stress Criteria: The basic general membrane design stress for the Service Level A condition shall not exceed 0.6 Fy and shall be reduced as appropriate to consider lateral-torsional buckling of bending members and effective lengths of compression members. The basic general membrane design stress for the Service Level C condition shall not exceed 1.2 X 0.6 Fy per AA-4321.		
SA-4220	Stress Criteria: The combined and bending design stress for Service Level C shall not exceed 0.9 Fy and shall be reduced as appropriate to consider lateral-torsional buckling of bending members and effective lengths of compression members. The combined and bending design stress for Service Level A shall not exceed 1.8 X 0.6 Fy per AA-4321.	NA	
SA-4231	Deflection Limits: The maximum deflection (dmax), may be sustained so that the duct function is not impaired shall be determined by analysis, test or both. The allowable deflections are as defined in AA-4231 for various Service level conditions.	NA	
SA-4232	Deflection Limits for Panels, Flanges, and Stiffeners: The maximum deflection (d), which occurs as the result of the applicable load combinations of SA-4212 is the lesser of two values derived from the following: Criterion No. 1 – Deflection shall not exceed the following criteria : (a) Plate or sheet: 1/8 in. per ft. of the maximum unsupported panel span in direction of airflow but not more than ¾ in. (b) Stiffeners and flange connections: Not to exceed 1/8 in. per foot of span but not more than ¾ in. (c) Flange connection to components: 1/360th of the span but not to exceed 1/8 in. Criterion No. 2 – Deflections shall be limited to assure that the following will not occur: (a) Distortion of air flow path cross-section in excess of tolerances specified on SA-6400. (b) Damage to safety related items such as instrumentation or accessories. (c) Impingement of deflected elements on adjacent services, such as equipment, pipe, cables, tubing, etc. (d) Loss of leak tightness in excess of leakage limit. See SA-4500. (e) Functional failure of components attached to the duct (e.g., instrument lines).	NA	
SA-4233	Deflection Limits for Mounting Frames and Equipment Interfaces: (a) See FG-4310 for mounting frame deflection limits. (b) See applicable equipment section for other deflection limits.		
SA-4241	Vibration Isolation: The vibration isolation type and efficiencies, primarily between duct and equipment, shall be as designated in the Design Specification. The vibration isolation equipment shall be designed with restraints to resist the loads generated under any Service Condition.		
SA-4242	Provisions for Relative Movement: Clearances shall be provided to allow for the relative motion between equipment, ductwork, and supports. When clearances or travel ranges or both are required to accommodate movements of ductwork or supports, design margins shall be introduced to allow for variations due to fabrication and installation. Design clearances and travel ranges shall be based on the maximum range that might occur between two operating conditions and not necessarily the maximum cold to hot range. All parts of support shall be disengaged by the movements of ductwork.		

ASME-AG-1-2003 CODE ON NUCLEAR AIR AND GAS TREATMENT COMPLIANCE REQUIREMENTS

Source	Requirement Text	Verification/ Validation R- Review A-Analysis T-Test I-Inspection	Document Reference (Where requirement is incorporated)
SA-4243	Tolerances: Installation and fabrication tolerances for duct-work shall be accounted for in the design of the ductwork and supports. Fabrication tolerances shall comply with SA-6400.		
SA-4244	Permanent Attachments: The attachment design shall include all Service Conditions and Load combinations set forth in SA-4212 and SA-4213, or as required by the Design Specification. The permissible types of welded joints shall be in accordance with AWS D1.1, or AWS D1.3, as applicable. Attachments may be either the welded or bolted type and shall be considered as follows:		
SA-4244 (a)	Welded Attachments: Consideration shall be given to local stresses induced in the ductwork by integral attachments as defined in AA-4243. For items used as part of an assembly for the support or guiding of ductwork, the materials shall be compatible for welding, see Article AA-6000.		
SA-4244 (b)	Bolted Attachments: Consideration shall be given to the mechanical connection and local stresses induced in the ductwork by nonintegral attachments as defined in paragraph AA-4243. The design of bolts for structural supports shall meet the requirements of Sub-article AA-4360.		
SA-4310	Ductwork Joints and Seams—General: Selection of joints and seams used in the assembly of ductwork sections shall be based on the required structural integrity, leak tightness, and the fluid flow within the system. Duct-housing interconnections shall be designed with consideration of the air distribution uniformity.		
SA-4320	Duct Joints and Seams		
SA-4321	The following longitudinal seams are acceptable for use in ductwork sections subject to the limitations of SA-4324. (a) groove weld (b) lock type (c) Pittsburgh lock (d) Fillet weld	NA	
SA-4322	The following longitudinal types of transverse joints are acceptable for use in ductwork sections: (a) welded flange (b) companion angle (c) Vanstone flange (d) Welded coupling		
SA-4323	Other types of rigid transverse connections may be acceptable provided that the structural characteristics are documented by engineering evaluation and tested per SA-5400		
SA-4324	Limitations of Ductwork Joints and Seams		
SA-4324 (a)	Longitudinal seams and transverse joints whose structural integrity is dependent on the folded or punched metal, shall be pressure tested. Test pressure shall be the structural capability pressure.	NA	
SA-4324 (b)	Longitudinal seams using sealants or elastomers to meet the leakage requirements shall be qualified by test, analysis, or test and analysis to assure meeting the design criteria of SA-4600. Brazed welding may be used for sealing purposes.		

ASME-AG-1-2003 CODE ON NUCLEAR AIR AND GAS TREATMENT COMPLIANCE REQUIREMENTS

Source	Requirement Text	Verification/ Validation R- Review A-Analysis T-Test I-Inspection	Document Reference (Where requirement is incorporated)
SA-4325	Bolts and Fasteners: Requirements for bolted connections of duct-to-duct and duct-to-housing, with a design pressure differential less than 15 in. w.g. shall be as follows: (a) Maximum bolt spacing shall be four inches on center unless otherwise specified by the Design Specification. The adequacy of bolt spacing greater than four inches on center, for pressure boundary integrity, shall be documented by calculation or testing. (b) Minimum bolt diameter shall be three-eighths inches unless otherwise specified by the Design Specification. The adequacy of bolt diameters less than three-eighths shall be documented by calculations or testing.		
SA-4325 (a)	Requirements for bolted connections for duct with design pressure differentials exceeding 15 in. w.g. shall be determined by calculations or testing.		
SA-4325 (b)	Nonbolted, nonwelded type fastening devices (e.g., screws, rivets, etc.) shall have their adequacy demonstrated for the load combinations of SA-4212 and documented by calculation or testing.		
SA-4325 (c)	Bolted connections shall be verified as being capable of sustaining all loading combinations by using an appropriate stress intensification factor.		
SA-4400	Components		
SA-4410	Flexible Connections: Flexible connections shall be designed to meet the requirements for design given by SA-4212, SA-4500~~, and NFPA 90A~~. Allowable leakage (fabric leakage and joint leakage) shall be determined in accordance with SA-4500.		
SA-4410	Flexible connections shall be rated by pressure and qualified life. The qualified life shall be determined by testing, or calculation, or both and be based on the environmental conditions provided by the Design Specification. Minimum physical properties (i.e., tensile strength), subject to degradation due to the environments required to satisfy design, shall be the basis of qualified life.		
SA-4410	Flexible connection pressure rating shall be determined by an ultimate strength test. The pressure rating of the connection shall be no greater than 50% of burst pressure. Calculation of burst pressure can be done in lieu of the test. Burst pressure shall exceed structural capability pressure.	NA	
SA-4410	If adhesive is used in fabrication or installation of flexible connections, it shall be environmentally qualified for use in expected environmental conditions.		
SA-4420	Gaskets: Gaskets shall be made of materials which are compatible with the Service Conditions (see SA-4600). Gasket material dimensions shall be based on joint design. An acceptable criterion for compression of gasket material shall be established on the basis of the gasket chosen. This acceptance criterion and the service life of the gasket material shall be documented by an engineering evaluation or testing.		
SA-4430	Access Doors and Panels: Construction of doors/panels and door frames shall be selected to meet the allowable leakage determined in SA-4500. Sealing surfaces between the door/panel frame shall be designed for compression sealing. The design shall incorporate means for adjusting compression forces, gasket compression, and alignment.		
SA-4430 (a)	Spacing of hinges, latches, and bolts shall be determined by calculation or test to ensure a uniform compression of the gasket. Spacing shall enable a compression of at least 50% of nominal gasket thickness and provide a gasket compression uniformity of +/- 20%.		
SA-4430 (b)	Door hinges shall be designed to minimize damage to compression seals due to friction and shear forces during opening and closing of the doors.		
SA-4430 ©	Dogs, hinges, latches, etc. shall be designed such that lubrication materials shall not enter the interior of the ductwork.		

ASME-AG-1-2003 CODE ON NUCLEAR AIR AND GAS TREATMENT COMPLIANCE REQUIREMENTS

Source	Requirement Text	Verification/ Validation R- Review A-Analysis T-Test I-Inspection	Document Reference (Where requirement is incorporated)
SA-4441	Provisions for Testing and Maintenance—Test Ports: The engineer shall evaluate the design function of the equipment to determine where test ports (including injection and sampling ports) are required.		
SA-4451	Miscellaneous—Drains: (a) Consideration shall be given to drains depending on requirements, services, or components within ductwork. (b) Drains form as integral part of the ductwork system pressure boundary and are subject to air leakage requirements established in SA-4500.		
SA-4452	Insulation: (a) Insulation shall be provided as required to ensure air conditioning function, limit condensation, or provide acoustic noise reduction. (b) Acoustic lining and thermal insulation shall not be applied to the inside of ducts which may become contaminated during normal plant operations. (c) Insulation applied to the outside of ducts shall not prevent access to doors, access hatches, or other components requiring adjustment or maintenance. (d) The fire hazard classification of applied insulation, adhesive, and sealer shall not exceed a flame spread of 25 and smoke developed of 50 in accordance with NFPA-90A (e) Insulation shall be attached to ductwork using a method which will not adversely affect the system/component safety function.		
SA-4453	Air Distribution Devices: Design of air distribution devices and their attachments shall comply with SA-4200 and AA-4300. The performance rating of air distribution devices shall be determined by actual tests performed in accordance with the Air Diffusion Council standard listed in SA-2000.	NA	
SA-4454	Security Barriers: The requirements for internal and bullet resistant barriers installed for the purpose of security shall be consistent with appropriate federal regulations. Consideration shall be given to the impact (pressure, noise, etc.) the installation of security and bullet resistant barriers will have on the overall performance of the air treatment system in which they are installed. The dead weight of the security and bullet resistant barriers shall be included in the design of ductwork supports.	NA	
SA-4510	Pressure Boundary Leakage—General: Pressure boundary leakage shall be limited that allowed by the system functional and environmental design requirements. Allowable leakage for a system, or portion of a system, shall be determined considering the following factors (as a minimum): (a) control of airborne contamination ~~(b) control of space pressure~~ ~~(c) control of space temperature~~ (d) ~~control of space humidity~~		

ASME-AG-1-2003 CODE ON NUCLEAR AIR AND GAS TREATMENT COMPLIANCE REQUIREMENTS

Source	Requirement Text	Verification/ Validation R-Review A-Analysis T-Test I-Inspection	Document Reference (Where requirement is incorporated)
SA-4520	Applicability: Pressure boundary leakage shall apply to air cleaning, air cooling, and ventilation systems. Each system's pressure boundary shall include, but not be limited to, the following items as applicable: (a) ductwork as defined I Subarticle SA-1130; (b) fan housings; (c) damper frames and valve bodies (and seats, where used for pressure boundary isolation); ~~(d) heating and cooling coil housings (or frames for duct mounted coils);~~ (e) mounting frames for components used for the reduction of radioactive contamination; (f) instrumentation or other components connected to the ductwork; (g) air cleaning unit housings.		
SA-4531	Evaluation—Responsibility: The Engineer shall evaluate each system to establish the allowable leakage to assure its design ventilation, temperature, and contamination control function is achievable.		
SA-4532	Allowable Leakage Determination: The following criteria shall be utilized in the determination of allowable leakage: (a) application of governing codes, regulations, and plant specific requirements; (b) consideration of each system's operating mode, including anticipated system upset conditions such as rapid closure of dampers; (c) normal and maximum operating static pressures throughout the pressure boundary; and (d) system internal and external environmental conditions.		
SA-4533	Exceptions to Leakage Requirements (however, all audible leaks shall be sealed): (a) all ducts serving the protected space and located within a protected space, regardless of length; (b) plant vent stacks or ducts outside plant buildings, when high level or mixed mode release credit is not required to meet off-site dose limits; (c) systems which provide air cooling or heating function only located entirely in a clean interspace; (d) other exceptions to quantitative measurement of leakage requirements shall be technically justified and specifically documented with basis by the Owner or his agent.	NA	
SA-4534	Documentation: Evaluation for allowable leakage of each system, or portion thereof, shall be documented. This documentation shall include the following: (a) identification of system or portion of system (b) governing codes, regulations, and plant specific requirements (c) purpose of leakage control; see SA-4510 (d) system modes of operation (e) normal operating pressure differential (NOPD) and system operating pressure transient (SOPT) (f) method of derivation of allowable leakage (g) test pressures and associated allowable leakage		
SA-4540	Leakage Testing: When specified for a system, shall be performed in accordance with SA-5300 and Section TA of this Code.		

ASME-AG-1-2003 CODE ON NUCLEAR AIR AND GAS TREATMENT COMPLIANCE REQUIREMENTS

Source	Requirement Text	Verification/ Validation R- Review A-Analysis T-Test I-Inspection	Document Reference (Where requirement is incorporated)
SA-4600	Design Specification: A design specification shall be prepared which consists, as a minimum, of the following information which is relevant to the ductwork and ductwork supports covered by this Section: (a) loads as defined by SA-4211; (b) environmental conditions (1) ductwork external design environmental conditions including pressure, temperature, relative humidity, radiation exposure, and hostile environmental factors for all plant conditions; (2) ductwork internal design environmental conditions for all system operating conditions; (c) service conditions as defined by AA-4213; (d) design and service limits as defined by AA-4214; (e) allowable ductwork leakage, as defined by SA-4500; and (f) system safety related function: Identify the function of the ductwork system for each plant condition. The function shall consist of purpose and operational parameters (i.e., flow, leakage, pressure, temperature.) Plant conditions and service limits are defined by AA-4213 and AA-4214.		
SA-5000	INSPECTION AND TESTING		
SA-5100	General: Inspection and testing shall be in accordance with the requirements of Sub-articles AA-5100, AA-5200, AA-5300, TA-3300, and the additional requirements of this Section.		
SA-5120	Responsibility for Procedures: When an inspection or test is required herein, written inspection or testing procedures shall be developed (by the parties performing the test or inspection), to the specified requirements of this Section. The inspection or testing shall be performed by personnel qualified in accordance with ASNT SNT-TC-1A as amended by ASME NQA-1 and AA-6433.		
SA-5210	Visual Inspection—General Requirements: Visual Inspections shall be performed in accordance with AA-5200 and TA-3510.		
SA-5220	Welded Connections: Inspection and testing of welds shall be performed in accordance with AA-5300 and AA-6000.		
SA-5230	Ductwork: Ductwork shall be visually inspected for proper dimensions including tolerances, as required by SA-6500 and governing construction documents. Ductwork fabrication shall meet the applicable requirements of SA-6000.		
SA-5231	Joints and Seams: Joints and Seams shall be visually inspected. Acceptance criteria shall be as follows: (a) Joints and seams shall comply with the requirements of SA-6400 and SA-6500. (b) Gasketed joints shall provide uniform gasket compression. Gaskets shall be installed per construction documents. (c) Brazed joints shall comply with the requirements of AA-6430. (d) Longitudinal or transverse welded joints shall comply with the requirements of SA-5220. (e) Threaded fasteners shall be provided with locking devices in accordance with AA-6258.		

ASME-AG-1-2003 CODE ON NUCLEAR AIR AND GAS TREATMENT COMPLIANCE REQUIREMENTS

Source	Requirement Text	Verification/ Validation R- Review A-Analysis T-Test I-Inspection	Document Reference (Where requirement is incorporated)
SA-5240	Stiffeners: Stiffeners shall be visually inspected to ensure compliance with the following acceptance criteria: (a) Stiffeners shall comply with the fabrication and installation requirements of SA-6000. (b) Welds shall comply with the requirements of SA-5220. (c) Threaded fasteners shall be provided with locking devices in accordance with AA-6258. (d) Removal of temporary attachments shall be confirmed.		
SA-5240	Ductwork Supports: Supports shall be visually inspected during installation, after installation, or both in accordance with the following acceptance criteria: (a) Supports shall comply with the fabrication and installation requirements of SA-6400 and SA-6500. (b) Welded joints shall comply with the requirements of SA-5220. (c) Threaded fasteners shall be provided with locking devices in accordance with AA-6258. (d) Removal of temporary attachments shall be confirmed.		
SA-5300 SA-5310	Pressure Boundary Leakage Testing—General: The ductwork system shall be tested to demonstrate compliance with the design leakage requirements identified in SA-4500, unless exempted by SA-4533.		
SA-5320	Systems Completeness: Prior to testing, the system shall be complete including all pressure boundary items identified in SA-4520, with the following exceptions: (a) Terminal air distribution devices may be excluded from the test. (b) Pressure boundary items not yet installed may be excluded from the testing with the approval of the Engineer. In such cases, prototype testing shall be performed to determine the typical leakage rate for the installation method. Detailed procedures shall be prepared to control installation of items not tested with the system. Procedures shall specify any hold points, special surface preparation or finish, and final inspection requirements to ensure that the item is installed similar to the prototype. Typical leak test values shall be increased by a factor of 10 percent and added to the actual leakage in the test report, and noted as such. (c) Systems may be testes in sections, if necessary, as allowed by SA-5330. Testing shall be in accordance with SA-5300.		
SA-5330	Allowances for Testing System Leakage Rates by Sections: Temporary isolation at a transverse joint shall be allowed subject to the following requirements: (a) Traverse joints not subjected to a quantitative leak test shall be companion angle type or other types which enable visual inspection of the sealing mechanism between mating ductwork sections. (b) Assembled joints utilizing mastic or liquid sealant shall be visually inspected to ensure uniformity of gasket compression. (c) Assembled joints utilizing mastic or liquid sealant shall be visually inspected to ensure that such material has been applied in accordance with the procedure approved by the Engineer. (d) The reduced allowable leakage (Lr) of ductwork sections shall be as follows: Lr = Ls – R....		
SA-5340	Testing Procedures: Prior to pressure boundary leakage testing, test procedures shall be developed in accordance with TA-3400. All test equipment shall be specified with the proper range and required accuracy. Test procedures shall include acceptance criteria determined by SA-4500, and SA-5320 and SA-5330.		

ASME-AG-1-2003 CODE ON NUCLEAR AIR AND GAS TREATMENT COMPLIANCE REQUIREMENTS

Source	Requirement Text	Verification/ Validation R- Review A-Analysis T-Test I-Inspection	Document Reference (Where requirement is incorporated)
SA-5350	Documentation: A test report shall be prepared to document the pressure boundary leakage test. This report shall include, as a minimum, the following information: (a) system or portion of system tested; (b) specified allowable leakage and test pressure; (c) calculations for ductwork square footage for systems tested by sections; (d) adjustments to allowable leakage per SA-5330 (d); (e) measured leak rates; (f) list of pressure boundary components which were not installed during the pressure boundary leakage test; (g) test equipment used; including Model No., Serial No., and evidence of calibration; (h) names of test personnel; (i) date of test.		
SA-5361	Quantitative Leakage Tests: Acceptance criteria for quantitative leakage tests shall comply with SA-4500 and SA-5350(d).		
SA-5362	Non-quantitative Leakage Tests: For non-quantitative leakage tests allowed by SA-4533, the acceptance criteria shall be that audible leaks have been sealed.		
SA-5410	Ductwork Pressure Test: A pressure test shall be performed at the structural capability pressure per TA-3522. This test pressure shall be maintained for the duration of the inspection. Upon completion of this pressure test, duct-work and equipment exhibiting permanent distortion or breach of integrity shall be repaired or replaced. The pressure test shall be repeated after repair or replacement until no permanent distortion or breach of integrity is observed. This test is not required if duct construction allowed in the SMACNA standards listed in Article SA-2000 for the system operational pressure transient (SOPT).		
SA-5420	Longitudinal Seam Qualification Test: Ductwork utilizing folded or punched metal longitudinal seams, shall be pressure tested to qualify the structural design capability of those seams. This pressure test shall be conducted at the beginning of fabrication and before any ductwork with these seams is installed in the facility. The pressure test shall be conducted on each sheet metal gauge utilizing these seams. Seams shall be tested at the structural capability pressure for the system(s).	NA	
SA-6000	FABRICATION AND INSTALLATION		
SA-6100	General: Ductwork and supports shall be fabricated and installed in accordance with this Section and Article AA-6000.		
SA-6121	Material Selection: Materials used in fabrication and installation performed under this Section shall conform to the requirements of SA-3000		
SA-6122	Material Identification: Materials to be utilized in the fabrication and installation of components, parts, and appurtenances shall be identified on fabrication or installation plans, or both and in the specifications, as required in AA-8000.		
SA-6123	Repair of Material With Defects: Material with defects that are discovered or produced during the fabrication and installation process may be used, provided the defects are repaired in accordance with the requirements of AA-8000, and for weld repairs, in accordance with AA-6300.		
SA-6130	Control of Installation and Fabrication Process: Quality control procedures shall be prepared and maintained current for all fabrication and installation processes in accordance with the requirements of AA-8000.		

ASME-AG-1-2003 CODE ON NUCLEAR AIR AND GAS TREATMENT COMPLIANCE REQUIREMENTS

Source	Requirement Text	Verification/ Validation R- Review A-Analysis T-Test I-Inspection	Document Reference (Where requirement is incorporated)
SA-6140	Welding: The welding of ductwork and ductwork supports shall comply with the requirements of AWS D1.1, AWS D1.3, AWS-D9.1 and ASME Code, Section IX, as applicable. Welding and brazing performed in accordance with this Section shall meet the requirements of AA-6300 and AA-6400.		
SA-6210	Fabrication Process--Cutting, Forming, Bending, Aligning, and Fitting: (a) Uncoated metal may be cut, formed, or bent by any means that does not degrade the mechanical or chemical properties of the material. (b) Coated metal may be cut, formed, or bent as described in SA-6211. Coating damaged by scratches, gouge marks or the removal of coating shall be repaired in accordance with AA-6540. (c) Inside bend radii shall not be less than the values given in the appropriate ASTM standard for the material grade. (d) Parts that are to be joined may be fitted, aligned and retained in position during the joining by the use of bars, jacks, clamps, drift pins, tack welds or other temporary attachment. The fitting and alignment process shall not cause damage to the joined parts, or their surfaces, or cause enlargement of bolt holes greater than 20% of hole diameter, or 1/8 in., whichever is greater. (e) Temporary welded attachments shall be completely removed after each use. They are subject to the following requirements: (1) Material shall be suitable for welding with no reduction in the structural integrity of the member to which the attachment is secured. (2) Attachment material shall be identified as required by SA-3000 (3) The welder and welding procedure shall be qualified in accordance with SA-6140. (4) The immediate area around and including the temporary attachment shall be marked in a suitable manner so that after attachment removal, the area can be examined in accordance with SA-5000. (f) Access doors and access panels shall be fabricated and designed to meet the design requirements of SA-4000. (g) Grilles, registers, diffusers and their accessories shall be designed to meet the design requirements of SA-4000.		
SA-6300 SA-6310	Mechanical Fastening—General: (a) Nuts for all bolts and studs shall be engaged for the full length of the nut thread. Margins shall be allotted to prevent nut from engaging the unthreaded portion of bolt or stud. (b) High strength bolts, used in making bolted joints, shall be installed in accordance with the requirements of the "Specification for Structural Joints Using A325 or A490 Bolts" AISC Code. Standard bolts used in making bolted joints shall be installed in accordance with the requirements of paras. 1.4.4 and 1.5.2 of the "Specification or the Design, Fabrication and Erection of Structural Steel for Buildings" AISC Code. (c) Self-drilling or self-threading screws are permissible if they are qualified in accordance with the design criteria in SA-4000. (d) Rivets must be qualified in accordance with SA-4000. (e) Pins for securing insulation should be secured to the metal surface by welding. Other attachment methods are acceptable, if allowed by the Design Specification. Justification of the method of attachment used shall be supported by evaluation or calculation, considering the requirements of Subarticle SA-4600. (f) Flange faces shall be free of joint crevices at comers. These defects shall be eliminated by welding and grinding.		

ASME-AG-1-2003 CODE ON NUCLEAR AIR AND GAS TREATMENT COMPLIANCE REQUIREMENTS

Source	Requirement Text	Verification/ Validation R- Review A-Analysis T-Test I-Inspection	Document Reference (Where requirement is incorporated)
SA-6400 SA-6410	Fabrication Tolerances—General: The fabrication of ductwork shall be accomplished within tolerances detailed in the following tables. These fabrication tolerances provide a method of quality control. Installation tolerances listed below are maximum deviations permitted from design dimensions. Greater deviations, due to rolling mill tolerances are not permitted. (a) Rectangular ducts, measured inside the duct at the joint end or stiffener, shall conform to Table SA-6400-1. (b) Circular ducts, measured by outside circumference or two interior diameters at 90 deg. (+/- 5) to each other, shall conform to Table SA-6400-2. (c) After fabrication is complete, flat sheet or plate surfaces shall not have a waviness, or bulge, greater than the flatness tolerance given in Table SA-6400-3. (d) The tolerances given in Tables SA-6400-1, 2, and 3 are for manufacturing. Maximum operating deflections are given SA-4230. (e) Holes prepared for joining mating flanges shall not exceed the required bolt diameter by more than 20%, or 1/8 in., whichever is larger, of bolt diameter. The center-to-center alignment of holes must be held to meet this tolerance or one flange must be drilled. Hole spacing shall be a maximum of 4 in. center-to-center, with holes at corners of the flange. (f) Grilles, registers, and diffusers shall be fabricated to manufacturer's dimensions and tolerances.		
SA-6500	Installation Tolerances: Ductwork and their supports shall be installed within the tolerance specified by approved construction documents. These tolerances shall comply with the design requirements of SA-4000.		
SA-6600	Cleaning, Finishing, and Coating: Galvanized surfaces shall be free of damage which impairs the effectiveness of the coating. Surfaces shall be repaired in accordance with AA-6540. Painted surfaces shall be prepared and finished as described in AA-6000. Painted surfaces shall be free of scratches and welding damage. Surfaces shall be repaired and repainted in accordance with AA-6000. Required marking, for identification, shall be on the exterior of each section.		
SA-7000	PACKAGING, SHIPPING, RECEIVING, STORAGE, AND HANDLING:		
SA-7100	General: Packaging, shipping, receiving, storage, and handling requirements shall be in accordance with Article AA-7000 and this Section.		

ASME-AG-1-2003 CODE ON NUCLEAR AIR AND GAS TREATMENT COMPLIANCE REQUIREMENTS

Source	Requirement Text	Verification/ Validation R-Review A-Analysis T-Test I-Inspection	Document Reference (Where requirement is incorporated)
SA-7210	Packaging—General: Ductwork and accessory items packaging requirements are dependent upon the protection level as described by Sub-article AA-7230. Additional clarification or exceptions are provided below: (a) Individual duct sections, assembled or unassembled, shall not require special packaging or end closures. These individually identified items may be pelletized for convenience. Protection equal to level "D" of NQA-2, Part 2.2, paragraph 2.2.4, is required. (b) Acoustically lined or insulated duct sections shall have protective wrapping to prevent water damage. Protection equal to level "C" of NQA-2, Part 2.2, paragraph2.2.4, is required. (c) Grilles, registers, and diffusers shall be packaged individually by the Manufacturer to prevent any degradation. Protection equal to level "C" of NQA-2, Part 2.2, paragraph 2.2.4, is required. (d) Extractors, turning vanes, and splitter dampers shall be packaged individually by the Manufacturer to prevent damage and degradation until installation. Protection equal to level "C" of NQA-2, is required. Should these devices be installed into the ductwork sections before shipment, all moving parts shall be secured and all sliding or operation points shall be protected from degradation by methods equal to level "C." The basic duct section level shall remain "D" of NQA-2, Part 2.2, paragraph 2.2.4.		
SA-7300	Shipping: This section relates to all transportation methods from the original manufacturer, or supplier, to the job site. In addition to the applicable Federal and State transport regulations, the provisions of Article AA-7000 shall also apply.		
SA-7400	Receiving: Receiving at the job site or intermediate location, where additional work is to be performed or for long term storage, shall be accomplished in accordance with the provisions of Article AA-7000. It shall be the requirement, at any receiving point, to have adequate descriptions of items to permit suitable inspection for conformance, damage acknowledgement, and proper documentation. Records of such inspections shall be maintained until the item is reshipped or installed.		
SA-7510	Storage—General: Ductwork and accessory item storage requirements are dependent upon the protection level described by Sub-article AA-7230. These levels shall be the required storage requirements except in certain circumstances as listed below: (a) Duct sections shall be stored, on adequate dunnage, in accordance with level "D" requirements. Lined or insulated ductwork, unless water-proofed at time of fabrication, shall be stored in accordance with level "C" requirements. Extractor and splitter dampers shall have moving parts protected in accordance with level "C" requirements. (b) Extractors, turning vanes, and splitter dampers shall be stored in accordance with the applicable levels in paragraph SA-7214. (c) Ductwork supports shall be stored in accordance with level "C" requirements for uncoated carbon steel and level "D" requirements for other ductwork support materials. (d) Components covered by others sections of this Code, that are installed into an integral assembly which is covered by this Section, shall be stored in accordance with Sub-article AA-7230.		
SA-8000	QUALITY ASSURANCE:		

ASME-AG-1-2003 CODE ON NUCLEAR AIR AND GAS TREATMENT COMPLIANCE REQUIREMENTS

Source	Requirement Text	Verification/ Validation R-Review A-Analysis T-Test I-Inspection	Document Reference (Where requirement is incorporated)
SA-8100	General: Equipment and material covered under this Section shall be manufactured, fabricated, installed, inspected, and tested in accordance with the provisions of a Quality Assurance Program meeting the requirements of Article AA-8000.		
SA-8200	Material Identification: Measures shall be established for controlling and identifying material throughout the manufacturing process and during shipment in accordance with Article AA-8000.		
SA-8300	Drawings and Documentation: As a minimum, the following drawings and documentation shall be provided to the Owner: (a) design parameters ~~(b) material certifications~~ (c) maximum operating pressure (d) structural capability pressure (e) test pressures (f) basis and quantity for maximum allowable leakage (g) system layout drawings (h) welding procedures (i) visual inspection reports (j) test acceptance criteria (k) leak test reports (l) environmental qualification reports (m) ductwork and ductwork support fabrication details		
SA-9000	NAMEPLATE AND STAMPING:		
SA-9100	General: All items manufactured under the requirements of this Section shall be identified to assure compliance with the requirements of Subarticle AA-8200, and Subarticles AA-9130 and AA-9140. Records, as necessary to assure compliance with Sub-article AA-8200, shall be maintained by the responsible organization in accordance with the approved quality assurance program.		
SA-9111	Ducts: Each duct section shall have noncorrosive, permanent identification markings. Identification markings shall relate each duct section to the applicable design and fabrication documents. Markings shall be located on the exterior of the duct. Markings need not be visible after installation is complete; however, markings shall be retrievable. It is recommended that the identification markings be placed on the "incoming air" end of the duct joint, as close to the end of the joint as possible, and not in such position as to be hidden or nonreadable.	NA	
SA-9112	Ductwork Supports: Each duct support shall have noncorrosive, permanent identification markings. Identification markings shall relate each ductwork support to the applicable design and fabrication documents.	NA	
SA-9113	Air Distribution Accessories: Air distribution devices (i.e., grilles, registers, diffusers, louvers, etc.) shall be marked, stamped or provided with a nameplate which shall relate to the design and fabrication documents. Identification shall be retrievable after completed installation.	NA	

ASME-AG-1-2003 CODE ON NUCLEAR AIR AND GAS TREATMENT COMPLIANCE REQUIREMENTS

Source	Requirement Text	Verification/ Validation R- Review A-Analysis T-Test I-Inspection	Document Reference (Where requirement is incorporated)
HA	SECTION HA: Housings		
HA-1000	INTRODUCTION		
HA-1100 HA-1110 HA-1120 HA-1130	Scope: This Section provides requirements for the design, construction, performance, fabrication, inspection, acceptance testing, and quality assurance for housings and housing supports in nuclear-safety related air treatment systems. Purpose: The purpose of this section is to ensure that the housings have acceptable design, performance, and construction. Applicability: This section applies to housings containing air cleaning, air handling, and air conditioning components. Internal components of housings including, but not necessarily limited to, HEPA filters, prefilters, adsorbers, moisture separators, cooling and heating coils, dampers, mounting frames, and fans are covered in other Division II Code sections. This section does not apply to sizing of housings, nor does it apply to the design of the nuclear air cleaning, air conditioning, or air handling systems in which the housings are installed. Housing interface boundaries, as applied to this section are shown on Figs. HA-1120-1, HA-1120-2, and HA-1 120-3. Interface boundaries occur between housing penetrations and external piping, instrumentation, and conduit. Interface boundaries also occur between internal and external components and structural support members directly attached to the housing. Definitions and Terms:		
HA-2000	REFERENCED DOCUMENTS		
	Referenced Documents	NA	
HA-3000	MATERIALS		
HA-3100 HA-3110	Allowable Materials (General Requirements): (a) Material used shall have properties and composition suitable for the application as defined by the Design Specification and the service conditions, as defined in AA-4213. Materials shall be in conformance with the ASME and the ASTM materials listed in Table HA-3100. Substitute materials shall be approved by the Owner or designee. (b) Materials that are part of the pressure boundary or equipment support shall meet the structural requirement of HA-4000. (c) Materials expressly prohibited or limited shall be explicitly described in the Design Specification.		
HA-3111	Protective Coatings: All carbon steel surfaces shall be painted to protect against corrosion and to facilitate cleaning and decontamination. Coatings shall comply with the requirements of Section AA-6500 and ASTM D5144. Coatings shall meet radiation resistance, chemical resistance, and decontamination requirements in accordance with the Design Specification. Stainless steel (galvanized), bronze, copper, aluminum, and glass surfaces are not required to be coated.		
HA-3200 HA-3210 HA-3211	Special Limitations on Materials (Metals): Physical Properties: Changes in the physical properties of metals at minimum and maximum design temperatures must be recognized and factored into the design of housings.		
HA-3212	Galvanic Corrosion: The possibility of galvanic corrosion due to the relative potentials of aluminum, copper, and their alloys should be considered when used in conjunction with each other, or with steel or other metals and their alloys.		

ASME-AG-1-2003 CODE ON NUCLEAR AIR AND GAS TREATMENT COMPLIANCE REQUIREMENTS

Source	Requirement Text	Verification/ Validation R- Review A-Analysis T-Test I-Inspection	Document Reference (Where requirement is incorporated)
HA-3213	Corrosive Vapors: Aluminum and zinc shall not be used in the presence of corrosive vapors unless protected by coatings designed to prevent deterioration of the metal. Protective measures other than coating shall be approved by the Owner or designee.		
HA-3214	Nonmetallic Materials: The use of nonmetallic materials such as plastics, elastomers, and similar substances is permitted in the construction of housings provided that in the selection of these materials, consideration is given to: (a) emission of toxic vapors; (b) degradation of properties caused by temperature extremes, radiation exposure, chemical exposure, and aging; and (c) maintainability.		
HA-3215	Deterioration of Materials in Service: It is the responsibility of the Owner or designee to identify the environment in which housings must operate so that the Manufacturer can select the grade of materials to meet the conditions stated in the Design Specification.		
HA-3300	Certification of Material: For structural and pressure boundary materials, the supplier shall make available ~~certified test reports of chemical and physical properties~~. For those ASTM materials which do not have physical testing required by the ASTM specification, tensile testing shall be performed per ASTM A370. All ~~other~~ materials used in the construction of housings shall be provided with a manufacturer's Certificate of Compliance covering the ASME, ASTM, or other material specification, grade, and class, if applicable.		
HA-4000	DESIGN		
HA-4100	General Design: Housings shall be designed in accordance with the requirements of AA-4000 and this Section. The design shall incorporate requirements for structural strength, rigidity, and sealing surfaces to provide leak-tightness of internal mounting frames to the housing. ~~Decontamination requirements shall be specified in the Design Specification, by the Owner or designee.~~		
HA-4200 HA-4210 HA-4211	Design Criteria (Load Criteria): Loads: Loads to be considered in the structural design of housings are listed in AA-4211 with the following additions and clarifications.		
HA-4211 (a)	Dead weight (DW): the weight of the Housing members excluding the dead weight of internal equipment such as HEPA filters and their respective mounting frames. DW includes sheet metal panels, door panels, frame members, and stiffeners.		
HA-4211 (b)	Component load (CL): The force of the internally mounted components imposed on the housing. CL is separated into four portions: dead weight, normal operating pressure differential (NOPD) for the particular component, OBE, and SSE. Additional dynamic loads (ADL), will be provided by the Design Specification, as applicable.		
HA-4211 (c)	External load (EL): as defined in AA-4211.		
HA-4211 (d)	Fluid momentum load (FML): as defined in AA-4211. Housing internal components shall be designed to withstand the FML resulting from air turbulence, from fan discharges into the housing. The housing portion where this load is significant is determined by the length required to regain uniform airflow as given by AMCA 201 Fig 3-3.	NA	
HA-4211 (e)	Hydrostatic load (HL): shall be added to the dead weight (DW) as applicable. Hydrostatic loads from accumulated condensate, water deluge systems, moisture separators, and associated housing flooding. The hydrostatic load shall be established by documented analysis base on housing internal and component function.	NA	

ASME-AG-1-2003 CODE ON NUCLEAR AIR AND GAS TREATMENT COMPLIANCE REQUIREMENTS

Source	Requirement Text	Verification/ Validation R-Review A-Analysis T-Test I-Inspection	Document Reference (Where requirement is incorporated)
HA-4211 (f)	Live load (L): includes a construction manload of 250 lb on the roof of the housing. Housing sheet metal floors shall be designed for at least a 50 psf live load when no other floor system is provided (e.g., grating, concrete slab).		
HA-4211 (g)	Normal operating pressure differential (component) ($NOPD_C$): the opening pressure differential across the component from upstream to downstream of the component included in the housing. See applicable Division II component sections for all component NOPD's.		
HA-4211 (h)	Normal operating pressure differential (housing) ($NOPD_h$): The maximum pressure differential between inside the housing and external to the housings. For ease of design, a housing may be designed using one pressure value that envelopes SOPT and NOPD.		
HA-4211 (i)	System operational pressure transient (SOPT): as defined in AA-4211 or may be enveloped with $NOPD_h$ and $NOPD_C$.		
HA-4211 (j)	Seismic loads (SL): Loads that are the result of the envelope of the operating basis earthquake (OBE) and the safe shutdown earthquake (SSE). As an option, the OBE, and SSE may be considered separately with the OBE loads used for the Level B load combination. Both orthogonal components of horizontal and vertical components of the seismic excitation shall be applied simultaneously in the direction that will produce worst-case stresses and deflections. These components may be combined by the square root of the sum of the squares (SRSS) method.		
HA-4211 (k)	T and N: defined in AA-4211		
HA-4211 (l)	Design pressure differential (DPD): The dynamic pressure loads resulting from a design basis accident (DBA), intermediate break accident (IBA), or small break accident (SBA). Housings should be located outside the local pipe break affected area. If housings are subjected to these loads, the Design Specification (HA-4600) shall address the specific design requirements considering a Service Level D combination.		
HA-4211 (m)	For other component load criteria see the following sections: (10) HEPA filters – FC-4300 (11) Type II adsorbers – FD-4400 (12) Type III adsorbers – FE-4400 (13) Mounting frames – FG-4200 (14) Dampers – DA-4000 (15) Moisture separators – FA-4000 (16) Pre-filters – FB-4000 (17) Coils – CA-4000 (18) Fans – BA-4000 (19) Ductwork – SA – 4200 (20) Type IV adsorbers – FH-4300	NA	
HA-4212	Load Combinations: The applicable loads are given in Table HA-4212.		
HA-4213	Service Conditions: The requirements of AA-4213 apply.		
HA-4214	Design and Service Limits: The requirements of AA-4214 apply.		

ASME-AG-1-2003 CODE ON NUCLEAR AIR AND GAS TREATMENT COMPLIANCE REQUIREMENTS

Source	Requirement Text	Verification/ Validation R- Review A-Analysis T-Test I-Inspection	Document Reference (Where requirement is incorporated)
HA-4215	Housing Supports: Housing supports shall be designed per the loads and load combinations in HA-4211 and HA-4212. The stress criteria for each load combination shall be per HA-4220. Floor mounted housing supports shall be designed to act as an integral base of the housing. Anchorage to the floor shall be designed to transfer the lateral forces without overturning or deformation of the housing unit. Units with internal mounting frames where leakage is a design consideration, shall have floor anchorages near the junction of the mounting frame and base. Small units which are typically provided with the base from the vendor's facility shall be designed for the installation/erection loads associated with a package unit. Larger units that are installed using modular construction need only consider the installation loads associated with each piece.		
HA-4220	Stress Criteria: The allowable stresses for housing sheet metal material and cold formed members shall be as defined in the AISI "Specification for the Design of Cold Formed Steel Structural Members." The allowable stresses for hot rolled shapes and plates shall be as defined in the AISC "Specification for the Design, Fabrication and Erection of Structural Steel for Buildings." The basic general membrane design stress for the Service Level A condition shall not exceed 0.6 F_y and shall be reduced as appropriate to consider lateral-torsional buckling of bending members and effective lengths of compression members. The basic general membrane design stress for the Level C condition shall not exceed 1.2 x 0.6 F_y per AA-4321. The combined membrane and bending design stress for Service Level A shall not exceed 1.5 x 0.6 F_y and shall be reduced as appropriate to consider lateral-torsional buckling of bending members and effective lengths of compression members. The combined membrane and bending design stress for the Level C condition shall not exceed 1.8 x 0.6 F_y per AA-4321.		
HA-4230 HA-4231	Deflection Criteria (Deflection Limits): The deflection limits shall be specified in the Design Specification and shall be in accordance with AA-4231.		
HA-4232	Deflection Limits for Mounting Frames and Equipment Interfaces: For walk-in housings, the deflection limits for the mounting frames shall also be considered at the interface between the frame and the housing. For deflection limitations of other equipment (e.g., fans, dampers, ductwork) see the applicable Division II Code Sections.		
HA-4240 HA-4241	Other Criteria: Vibration Isolation: Vibration isolation requirements shall be specified by the Owner or designee in the Design Specification.		
HA-4242	Provisions for Relative Movement: Clearance shall be provided to allow for relative movement of the internal equipment during operation and during maintenance of the equipment.		
HA-4243	Tolerances: Tolerances shall be specified for all external and internal interface boundaries. Tolerances shall be specified in the design documents. Tolerances shall be accounted for in applicable design analysis (e.g., location of applied load).		
HA-4244	Housing Attachments: Housing attachment design shall include all Service Links and Load Combinations set forth in HA-4212 and HA-4213, or as required by the Design Specification. Attachments shall be either the welded or bolted type.		

ASME-AG-1-2003 CODE ON NUCLEAR AIR AND GAS TREATMENT COMPLIANCE REQUIREMENTS

Source	Requirement Text	Verification/ Validation R- Review A-Analysis T-Test I-Inspection	Document Reference (Where requirement is incorporated)
HA-4245	Welded Attachments: Consideration shall be given to local stresses induced in the housing wall by integral attachments as defined in AA-4243. Attachment and housing material shall be compatible for welding. See AA-6000. The permissible types of welded joints shall be in accordance with AWS D1.1, AWS D9.1, AWS D1.3, or ASME Section IX, as applicable.		
HA-4246	Bolted Attachments: Consideration shall be given to bolting and local stresses induced in the housing wall by integral attachments as defined in AA-4243. The design of bolts for structural supports shall meet the requirements of AISC Specification for the Design, Fabrication, and Erection of Structural Steel, Ninth Edition, Part 4.		
HA-4247	Fatigue Considerations: Internal housing components subjected FML should be designed for fatigue based on cyclic loading of the element. See HA-4211 to determine the portion of the affected internal housing components. The appropriate reductions in allowable stresses are given in Section 5, Appendix B of the AISC Specification for the Design, Fabrication, and Erection of Structural Steel, Ninth Edition, Part 4.	NA	
HA-4248	Fire Protection: Fire protection requirements shall be specified by the Owner or designee commensurate with individual component requirements. Fire protection for Type III adsorbers shall be provided per FE-4620.	NA	
HA-4300 HA-4310	Housing Joints and Seams (General Requirements): Selection of joints and seams used in the assembly of housing sections shall be based on the required structural integrity, leak-tightness, and the fluid flow within the system. Duct-housing interconnections shall be designed with consideration of the air distribution uniformity.		
HA-4320 HA-4321	Housing Joints and Seams: Acceptable Longitudinal Seams and Joints: The following longitudinal seams and joints are acceptable for use in housing sections subject to limitations of HA-4330, -4340, -4500: (a) welded lap joint (b) welded butt joint (c) welded flange (d) fillet corner welds		
HA-4322	Acceptable Transverse Joints: The following types of transverse joints are acceptable for use in housing sections subject to limitations of HA-4330, -4340, -4500: (a) welded lap joint (b) welded butt joint (c) welded flange (d) companion angle: gasketed & bolted		
HA-4323	Other types of Connections: Other types of rigid longitudinal and transverse connections may be acceptable provided that the design structural characteristics are qualified. Qualification shall be documented by engineering evaluation or test as specified by the Owner or designee. Qualification test shall demonstrate the joint's ability to withstand load combinations in HA-4212. Joint design qualification shall be completed prior to the start of fabrication.		
HA-4324	Bolts and Fasteners: Connections shall be designed to sustain all loading combinations. Bolted connection and joint design shall be designed to meet allowable leakage of HA-4500.		
HA-4330 HA-4331	Air Cleaning Units Joints and Seams: The pressure boundary joints and seams for all air cleaning unit housings shall be continuously welded.		

ASME-AG-1-2003 CODE ON NUCLEAR AIR AND GAS TREATMENT COMPLIANCE REQUIREMENTS

Source	Requirement Text	Verification/ Validation R- Review A-Analysis T-Test I-Inspection	Document Reference (Where requirement is incorporated)
HA-4332	Seals: Penetrations on housings shall be sealed by welding, with a sealant qualified for the housing's environment, or with adjustable compression or gland-type seals. Gland-type seals include but are not limited to "O" rings, gaskets, and other nonmetallic materials.		
HA-4333	Electrical Conduits and Drains: All penetrations by electrical conduit and drains shall be arranged and individually sealed or valved so that bypassing of HEPA filter banks or adsorber banks cannot take place. Electrical conduit open to the inside shall be internally sealed to meet allowable leakage determined in HA-4500.		
HA-4334	Separate Mounting Frames: Where separate mounting frames for HEPA filters and adsorbers are required, they shall be continuously seal welded to the housing.		
HA-4340	Air Conditioning and Air Handling Units Housing Joints and Seams: These unit joints and Seams shall be of either welded or bolted construction or other types meeting the requirements of HA-4323 and the allowable leakage criteria specified in the Design Specification.	NA	
HA-4341	Penetrations: Penetrations on housings shall be sealed by welding, adjustable compression, gland-type seals, or other method capable of meeting allowable leakage criteria for the housing as determined in HA-4500.		
HA-4400 HA-4410	Accessories: Gaskets shall be made of materials which are compatible with the conditions of HA-4600. Gasket dimensions shall be based on joint design. An Acceptable criterion for compression of gasket material shall be established on the basis of the gasket chosen. This acceptance criterion and the service life of the gasket and joint shall be documented by evaluation or testing as determined by the Owner or designee.		
HA-4420	Access Doors and Panels: Construction of doors/panels and door frames shall be selected to meet the allowable leakage determined in HA-4500. Sealing surfaces between the door/panel and frame shall be designed for compression sealing. The design shall incorporate means for adjusting compression forces, gasket compression, and alignment. Spacing of hinges, latches, and bots shall be determined by calculation or test to ensure a uniform compression of the gasket. Spacing shall enable a compression tight enough to assure leakage requirements are met (HA-4500) and provide a gasket compression uniformity of +/-20 deg. Hinged, if specified, shall be designed to minimize damage to compression seals due to friction and shear forces during opening and closing of the doors. Doors shall be designed for ease of operation by one person. Man entry housing doors shall be operable from both inside and outside the housing and be clearly labeled for open and closed latch position. Hinges and latches shall be designed such that lubrication materials shall not enter the interior of the housing. See Non-mandatory Appendix HA-B (B-1110) for additional guidance on the design of access doors.		
HA-4430 HA-4431	Provisions for Testing and Maintenance: Test Ports: The Owner or designee shall evaluate the design function of the equipment to determine where test ports (including injection and sampling ports) are required. The penetration shall comply with HA-4332, and have a cap or plug that is suitable to meet the pressure requirements of the housing.		

ASME-AG-1-2003 CODE ON NUCLEAR AIR AND GAS TREATMENT COMPLIANCE REQUIREMENTS

Source	Requirement Text	Verification/ Validation R- Review A-Analysis T-Test I-Inspection	Document Reference (Where requirement is incorporated)
HA-4432	Manifolds: The Owner or designee shall determine where injection and sampling manifolds are required. Injection and sampling manifolds shall be constructed of metal to minimize damage potential and to maintain manifold qualification. Sampling and injection manifolds which are required to be installed within the filter housing should be designed for permanent installation within the housing. If permanently installed manifolds cannot be provided, then manifolds shall be designed to be removable, with each manifold piece numbered, tagged, and marked for reinstalling prior to each test. Permanent manifold installation is recommended to obtain better repeatability of test results. When an air cleaning unit contains two or more HEPA filter banks or adsorber banks in series, or both, injection and sampling manifolds for the respective test agents are required for each of the filter and/or adsorber banks. General guidance for manifolds is given in Nonmandatory Appendix HA-C. Injection manifolds shall be qualified in accordance with HA-5800.		
HA-4433	Housing Access: Walk-in housings shall be protected and braced to prevent damage by personnel entering for inspection and maintenance. Walk-in access doors (20 in. wide by 50 in. high, minimum) shall be provided on each side of each component section when housing size permits. A permanent platform shall be installed internal to the housing to provide access to filters for filter banks greater than or equal to six ft. in height. Platform shall not interfere with filter access or air flow distribution. Space shall be provided both internal and external to the housing for equipment removal and maintenance. See Nonmandatory Appendix HA-B for additional guidance.	NA	
HA-4434	Lighting: Walk-in housings shall be fitted with vapor-tight lights between each bank of components. For walk-in air cleaning unit housings, fixtures shall be flush mounted and serviceable from outside of the housing. Lighting levels shall be determined based on personnel safety visual requirements as given in the Design Specification and guidance provided by IES Lighting Handbook as published by the Illuminating Engineering Society of North America.	NA	
HA-4440 HA-4441	Miscellaneous: Drains: Consideration shall be given to drains depending on requirements, services, or components within each compartment. For example, drains shall be required for: (a) fire protection systems (b) removal of decontamination liquids (c) moisture separators (d) condensing cooling coils Drains form an integral part of the housing pressure boundary and are subject to air leakage requirements established in HA 4500. The size selected for each drain furnished in the housing as well as the collection point for each drain shall be documented by calculation or test as determined by the Owner or designee. For the additional guidance in the design of drains, see Nonmandatory Appendix HA-B.		

ASME-AG-1-2003 CODE ON NUCLEAR AIR AND GAS TREATMENT COMPLIANCE REQUIREMENTS

Source	Requirement Text	Verification/ Validation R-Review A-Analysis T-Test I-Inspection	Document Reference (Where requirement is incorporated)
HA-4442	Insulation: (a) Insulation shall be provided as specified by the Owner or designee to ensure air conditioning function, limit condensation, or provide acoustic noise reduction as required. (b) Acoustic linings and thermal insulation shall not be applied to the inside of housings that may become contaminated. (c) Insulation applied to the outside of housings shall not prevent access to doors, access panels, or other components requiring adjustment or maintenance. (d) The fire hazard classification of applied insulation, adhesive, and sealer shall not exceed a flame spread of 25 and smoke developed of 50 in accordance with NFPA-90A.		
HA-4443	Clamping Mechanism: Side access housings shall have a clamping mechanism, filter retrieval features, and filter indexing mechanisms. The clamping mechanism shall be individually adjustable for each HEPA filter or adsorber. For side access housings with fluid seals, the filter clamping mechanism shall be capable of moving the filter on and off through adequate travel to ensure the knife edge is embedded into the pliable sealant and provides seal for the complete perimeter of each filter or adsorber. The clamping mechanism shall provide for uniform gasket compression. ~~The clamping mechanism for walk-in housings shall be designed per Section FG.~~		
HA-4500 HA-4510	Pressure Boundary Leakage (General): Pressure boundary leakage shall be controlled to ensure satisfactory environmental conditions, either within or outside of the nuclear facility. Allowable leakage for a housing, or portion of a housing, shall be determined considering the following factors: (a) control of airborne contamination ~~(b) control of space pressure~~ ~~(c) control of space temperature~~ (d) ~~control of space humidity~~		
HA-4520	Applicability: Housing pressure boundary leakage shall apply to air cleaning, air conditioning, and air handling systems. Each housing's pressure boundary shall include the following items: (a) housing enclosure (b) access panels and doors (c) penetrations for instrumentation piping, electrical, and other utilities.		
HA-4530 HA-4531	Evaluation (Responsibility): The Owner or designee shall establish the allowable leakage to assure ventilation, temperature, and contamination control functions are achieved.		
HA-4532	Allowable Leakage Determination: The following criteria shall be utilized in the determination of allowable leakage. (a) application of governing codes, regulations, and plant-specific requirements (b) consideration of each housing's operating mode, including anticipated system upset condition, such as rapid closure of dampers (c) normal and maximum operating pressures throughout the pressure boundary (d) system internal and external environmental conditions Guidance for determination of allowable leakage is given in Section SA, Nonmandatory Appendix SA-B.		

ASME-AG-1-2003 CODE ON NUCLEAR AIR AND GAS TREATMENT COMPLIANCE REQUIREMENTS

Source	Requirement Text	Verification/ Validation R- Review A-Analysis T-Test I-Inspection	Document Reference (Where requirement is incorporated)
HA-4533	Exceptions to Leakage Requirements: Air cleaning, air conditioning, and air handling housings exhibiting one of the following conditions need not be subjected to quantitative measurement of leakage unless otherwise required by the Design Specification. (a) Housings in systems serving only the protected space and located only within the same protected space. (b) Housings under negative pressure which are located entirely in a clean interspace, and only provide air cooling or heating function. However, the housing shall be pressurized to locate and seal all audible leaks. Reference Section SA, Nonmandatory Appendix SA-B, Figs. B-1410-1 through B-1410-3 for typical system configurations.		
HA-4534	Documentation: Derivation of allowable leakage for each housing, or portion thereof, shall be documented by the Owner or designee. This documentation shall include the following: (a) identification of housing or portion of housing (b) governing codes, regulations, and plant-specific requirements (c) purpose of leakage control; see HA-4510 (d) system mode of operation (e) normal and maximum operating pressure (f) method of derivation of allowable leakage (g) test pressures and associated allowable leakage		
HA-4600	Design Specification: The Owner Design Specification shall contain the following information which is relevant to the housing and housing supports covered by this Section. (a) Loads as defined by HA-4211. (b) Environmental conditions. (1) Housing external-design environmental conditions including, but not limited to pressure, temperature, relative humidity, radiation exposure, and hostile environmental factors for all plant conditions. (2) Housing internal-design environmental conditions for all system operating conditions. (c) Service conditions as defined by AA-4213. (d) Design and service limits as defined by AA-4214. (e) Allowable housing leakage as defined HA-4500. (f) System safety-related function: Identify the function of the housing for each plant condition. The function shall consist of purpose and operational parameters (i.e., flow, leakage, pressure, temperature). Plant conditions and service limits are defined by AA-4213 and AA-4214. (g) Fire protection requirements. (h) Material certification requirements. (i) Tolerance requirements. (j) Inlet and outlet configurations. (k) Housing components: adsorbers, fans, filters, moisture separators, dampers, heaters, coils, insulation, access requirements (i.e., doors, access panels), instrumentation and controls, spray-type conditioners.		
HA-5000	INSPECTION AND TESTING		
HA-5100 HA-5110	General (Scope and Applicability): This Section contains general requirements for the inspection and testing of housings and housing supports.		
HA-5120	Responsibility for Procedures: When an inspection or test is required herein, written inspection or testing procedures shall be developed, by the parties performing the test or inspection, to the specific requirements of this Section. The inspection or testing shall be performed by personnel qualified in accordance with ASNT SNT-TC-1A as amended by ASME NQA-1 and AA-6433.		

ASME-AG-1-2003 CODE ON NUCLEAR AIR AND GAS TREATMENT COMPLIANCE REQUIREMENTS

Source	Requirement Text	Verification/ Validation R- Review A-Analysis T-Test I-Inspection	Document Reference (Where requirement is incorporated)
HA-5200 HA-5210	Inspection (General Requirements): Visual inspections shall be performed in accordance with AA-5200 and TA-3410. Inspection and testing of welds shall be performed in accordance with AA-5300 and AA-6000.		
HA-5220	Housings: Housings shall be inspected for proper dimensions including tolerances, as specified by HA-6400 and governing construction documents.		
HA-5221	Joints and Seams: Joints and seams shall be visually inspected. Acceptance criteria shall be as follows. (a) Joints and seams shall comply with the requirements of HA-6400 and HA-6500. (b) Gasketed joints shall provide uniform gasket compression. Gaskets shall be installed per construction documents. (c) Longitudinal or transverse welded joints shall comply with AA-6000 requirements. (d) Threaded fasteners shall be provided with locking devices in accordance with AA-6258.		
HA-5222	Stiffeners: Stiffeners shall be visually inspected to ensure compliance with the following acceptance criteria. (a) Stiffeners shall comply with the fabrication and installation requirements of HA-6000. (b) Welds shall comply with AA-6000 requirements. (c) Threaded fasteners shall be provided with locking devices in accordance with AA-6258. (d) Removal of temporary attachments shall be verified.		
HA-5230	Housing Supports: Supports shall be visually inspected during installation, after installation, or both in accordance with the following acceptance criteria. (a) Supports shall comply with the fabrication and installation requirements of HA-6400. (b) Welded joints shall comply with AA-6000 requirements. (c) Threaded fasteners shall be provided with locking devices in accordance with AA-6258. (d) Removal of temporary attachments shall be verified.		
HA-5240	Filter Mounting Frame to Housing Weld Inspection: The housing filter mounting frame for HEPA filter and adsorbers shall be inspected using visual and nondestructive test methods per AA-6330.		
HA-5300 HA-5310	Pressure Boundary Leakage Testing (General): Temporary isolation at a transverse joint shall be allowed subject to the following requirements. (a) Transverse joints not subjected to a quantitative leak test shall be companion angle type or other types which enable visual inspection of the sealing mechanism between mating housing sections. (b) Assembled joints utilizing gasketing shall be visually inspected to ensure uniformity of gasket compression. (c) The reduced allowable leakage (L_r) of housing sections shall be as follows: $L_r = L_s - R$ $R = (C_j / C_T)L_s$ Where...		
HA-5320	Allowances for Housing Leakage Rates by Sections: Temporary isolation at a transverse joint shall be allowed subject to the following requirements.		

ASME-AG-1-2003 CODE ON NUCLEAR AIR AND GAS TREATMENT COMPLIANCE REQUIREMENTS

Source	Requirement Text	Verification/ Validation R- Review A-Analysis T-Test I-Inspection	Document Reference (Where requirement is incorporated)
HA-5330	Testing Procedures: Prior to pressure boundary leakage testing, test procedures shall be developed in accordance with TA-3330. All test equipment shall be specified with the proper range and required accuracy. Test procedures shall include acceptance criteria determined by HA –4500, HA-5320, and HA-5350.		
HA-5340	Documentation: A test report shall be prepared to document the Pressure Boundary Leakage Test. This report shall include the following information. (a) housing or portion of housing tested (b) specified allowable leakage and test pressure (c) calculations for housing section square footage for housings tested by sections (d) adjustments to allowable leakage per HA-5310(c) (e) measured leakage test (f) list of pressure boundary components which were not installed during the pressure boundary leakage test (g) test equipment used; including model number, serial number, and evidence of calibration (h) names of test personnel (i) date of test		
HA-5350 HA-5351	Acceptance Criteria (Quantitative Leakage Tests): Acceptance criteria for quantitative leakage tests shall comply with HA-4500 and HA-5310(c)		
HA-5352	Non-quantitative Leakage Tests: For non-quantitative leakage tests allowed by HA-4533, the acceptance criteria shall be that audible leaks have been sealed.		
HA-5400	Mounting Frame to Housing Leakage Test: A mounting frame pressure leak test may be used to detect leaks in the HEPA filter and adsorber mounting frames that could affect the results of the in-place leak test I TA-4300. The test, if used, shall be conducted in accordance with Nonmandatory Appendix TA-A.		
HA-5500 HA-5510	Structural Capability Tests (Housing Pressure Test): A pressure test shall be performed at the structural capability pressure per TA-3422. This test shall be maintained for the duration of the inspection. Upon completion of this pressure test, housings exhibiting permanent distortion or breach of integrity shall be repeated after repair or replacement until no permanent distortion or breach of integrity is observed.		
HA-5600	Air Flow Distribution Tests: When required by the Owner, air flow distribution qualification test for housings containing more than one HEPA filter or adsorber bank shall be made in the shop in accordance with Section TA-4600. This requirement shall be specified in the Owner's Specification. Acceptance criteria shall be in accordance with TA-4600. Housings containing HEPA filter(s), adsorbers, or both shall be field tested to demonstrate adequate air flow distribution in accordance with TA-4600. Tests shall be performed with components in the housing and the housing complete (i.e., assembled). Minor items such as temperature elements, pressure taps, etc., do not need to be installed as these components do not significantly influence air flow distribution.	NA	

ASME-AG-1-2003 CODE ON NUCLEAR AIR AND GAS TREATMENT COMPLIANCE REQUIREMENTS

Source	Requirement Text	Verification/ Validation R- Review A-Analysis T-Test I-Inspection	Document Reference (Where requirement is incorporated)
HA-5700	Air-Aerosol Mixing Uniformity Tests: When required by the Owner or designee, air-aerosol qualification test for housings containing more than one HEPA/adsorber shall be made in the shop in accordance with TA-4600 for each manifold design. This requirement shall be specified in the Owner's Specification. Acceptance criteria shall be in accordance with TA-4600. Tests shall be performed with components in the housing and the housing complete (i.e., assembled). Minor items such as temperature elements, pressure taps, etc., do not need to be installed as these components do not significantly influence mixing. This design qualification test may be performed once and submitted to the Owner or designee for approval. This design qualification test may be performed once and submitted to the Owner or designee for approval. The design of the manifold and its location in the housing must be the same as qualified or a new aerosol mixing test is required.	NA	
HA-5800	Sample Manifold Testing: Sampling manifolds shall be qualified to demonstrate that they collect a representable sample equivalent to a single point sample taken at a point at least ten duct diameters downstream of the filters. Refer to Nonmandatory Appendix D for performance test guidance. To ensure required leakage detection, acceptance criteria for sampling manifold shall be equal to or greater than the concentration detected with the single point sample.	NA	
HA-5900	Air Conditioning and Air Handling Unit Testing: When required by the Owner or designee, integrated component functional acceptance testing shall be performed in the shop per TA-4000. This requirement shall be included in the Owner's Specification.	NA	
HA-6000	FABRICATION		
HA-6100	General: Air cleaning~~, air conditioning, and air handling unit~~ housings and supports shall be fabricated in accordance with this Section and AA-6000.		
HA-6120 HA-6121	Materials (Material Selection): Materials used in fabrication performed under this Section shall conform to HA-3000 requirements.		
HA-6122	Material Identification: Materials to be utilized in the fabrication and installation of components, parts, and appurtenances shall be identified on fabrication drawings and in the specification, as required in AA-6000.		
HA-6123	Repair of Material with Defects: Material with defects that are discovered or produced during the fabrication process may be used, provided the defects are repaired in accordance with the requirements of AA-8000, and for weld repairs, in accordance with AA-6300.		
HA-6130	Control of Installation and Fabrication Process: Quality control procedures shall be prepared and maintained current for all fabrication processes in accordance with AA-8000 requirements.		
HA-6140	Welding: The welding of filter housings and supports shall comply with the requirements of AWS D1.1, AWS D1.3, AWS D9.1, or ASME Boiler and Pressure Vessel Code, Section IX. Welding and brazing performed in accordance with this Section shall meet the requirements of AA-6300 andAA-6400.		
HA-6200	Fabrication Process		
HA-6210 HA-6211	Cutting, Forming, Bending, Aligning, and Fitting Uncoated Metal: Uncoated metal may be cut, formed, or bent by any means that does not degrade the mechanical or chemical properties of the material.		

ASME-AG-1-2003 CODE ON NUCLEAR AIR AND GAS TREATMENT COMPLIANCE REQUIREMENTS

Source	Requirement Text	Verification/ Validation R- Review A-Analysis T-Test I-Inspection	Document Reference (Where requirement is incorporated)
HA-6212	Coated Metal: Coated metal may be cut, formed, or bent as described in HA-6211. Coating damaged by scratches, gouge marks, or the removal of coating shall be repaired in accordance with AA-6540.		
HA-6213	Inside Bend Radii: Inside bend radii shall not be less than the values of the material grade given in the AISC Manual of Steel Construction, Allowable Stress Design.		
HA-6214	Joining Parts: Parts that are to be joined may be fitted, aligned, and retained in position during the joining operation by the use of bars, jacks, clamps, drift pins, tack welds, or other temporary attachment. The fitting and aligning process shall not damage the joined parts, or their surfaces, or enlarge bolted holes greater than the values shown in AISI, Specification for Design, Fabrication, Erection of Structural Steel for Buildings, Table 1.23.4.		
HA-6215	Temporary Attachments: Temporary welded attachments may be used in the fabrication process but shall be completely removed after use. Where such temporary attachments are used, they shall be subject to the following requirements. (a) Material shall be suitable for welding with no deduction in the structural integrity of the member to which the attachment is secured. (b) Attachment material shall be identified as required by HA-3000. (c) The welder and welding procedures shall be qualified in accordance with HA-6140.		
HA-6300	Mechanical Fastening		
HA-6310 HA-3211	General: Nuts: Nuts for all bolts and studs shall be engaged for the full length of the nut thread. Margin shall be allotted to prevent the nut from engaging the unthreaded portion of the bolt or stud.		
HA-6312	High Strength Bolts: High strength bolts, used in making bolted structural joints, shall be installed in accordance with the requirements of the "Specification for Structural Joints Using A325 or A490 Bolts," AISC Code.		
HA-6313	Pins: Pins for securing insulation should be secured to the metal surface by welding. Other attachment methods are acceptable, if allowed by the Design Specification. Justification of the attachment method used shall be supported by evaluation or calculation as determined by the Owner or designee, considering the requirements of the Design Specification.		
HA-6314	Connecting: Connecting flange faces shall be free of joint crevices at corners. These defects shall be eliminated by welding or grinding.		
HA-6400	Fabrication Tolerances		
HA-6410	General: Housing fabrication shall be accomplished within the tolerances detailed in the manufacturer's design drawings. These fabrication tolerances provide a method of quality control. ~~For separately installed frames in walk-in housings, see Section FG.~~		
HA-6420 HA-6421	Side Access Housing and Gasket Seal Surfaces: Flatness: Each HEPA filter/adsorber housing seating surface shall be plane within 1/16 in.	NA	
HA-6422	Surface Finish: Pits, roll scratches, weld spatter, and other surface defects within the sealing areas shall be ground smooth. After welding, ground areas shall merge smoothly with the surrounding base metal.		
HA-6430 HA-6431	Side Access Housing Filter Fluid Seal Surfaces: Flatness: The tolerance on each knife edge shall be plane within 1/8 in.		

ASME-AG-1-2003 CODE ON NUCLEAR AIR AND GAS TREATMENT COMPLIANCE REQUIREMENTS

Source	Requirement Text	Verification/ Validation R-Review A-Analysis T-Test I-Inspection	Document Reference (Where requirement is incorporated)
HA-6500	Cleaning: All surfaces shall be cleaned per AA-6500 prior to acceptance. No halogen-bearing materials or carbon steel tools shall be used to clean housings or components constructed of stainless steel. Cleaning shall be performed in accordance with the Manufacturer's written procedures.		
HA-7000	PACKAGING, SHIPPING, RECEIVING, STORAGE, AND HANDLING		
HA-7100	General: Packaging, shipping, receiving, storage, and handling requirements shall be in accordance with AA-7000 and this Section.		
HA-7210	Packaging (General): Air cleaning, air conditioning, and air handling unit housing packaging requirements are dependent upon the protection level as described in AA-7230. Additional clarification or exceptions are provided below.		
HA-7211	Packaging (Protection): Air cleaning, air conditioning, and air handling unit housings shall be protected to prevent physical damage. All openings shall be covered with wood, metal, or plastic. Waterproofing is required to exclude moisture from interior spaces and external devices. Mating surfaces shall be identified and specifically protected from damage. Protection equal to Level "D" is required for the basic unit. Protection for housing components must be equal to that required by the level of protection specified in the applicable Code section.		
HA-7300	Shipping: This Sub-article relates to transportation methods from the manufacturer or supplier, to the job site. Shipping shall comply with the provisions of AA-7100, AA-7200, and AA-7300.		
HA-7400	Receiving: Receiving at the job site or intermediate location, where additional work is to be performed or for long term storage, shall be accomplished in accordance with the provisions of AA-7000. It shall be the requirement, at any receiving point, to have adequate descriptions of items to permit suitable inspection for conformance, damage acknowledgment, and proper documentation.		
HA-7510	Storage (General): Housing storage requirements are dependent upon the protection level described by AA-7230. Protection equal to Level "D" is required for the basic unit. Protection for housing components must be equal to that required by the level of protection specified in the applicable Code section. These levels shall be the required storage requirements along with the requirements of HA-7511 and HA-7512.		
HA-7511	Storage (Drains and Vents): All housing drains or vents shall be sealed or closed as specified by the Owner or designee. Provisions may be made to use certain drains or vents for assurance that water or other objectionable material does not accumulate within the housing.		
HA-7512	Storage (Other Components): Components covered by other Sections of this Code, that are installed into and integral assembly which is covered by this Section, shall be stored in accordance with AA-7230.		
HA-8000	QUALITY ASSURANCE		
HA-8100	General: Equipment and material covered under this Section shall be manufactured, fabricated, installed, inspected, and tested in accordance with the provisions of a Quality Assurance Program meeting AA-8000 requirements.		
HA-8200	Material Identification: Measures shall be established for controlling and identifying material throughout the manufacturing process and during shipment in accordance with AA-8000.		

ASME-AG-1-2003 CODE ON NUCLEAR AIR AND GAS TREATMENT COMPLIANCE REQUIREMENTS

Source	Requirement Text	Verification/ Validation R- Review A-Analysis T-Test I-Inspection	Document Reference (Where requirement is incorporated)
HA-8300	Drawings and Documentation: The Design Specification shall list the documentation requirements for the housing and list when this documentation is to be provided by the manufacturer, supplied to the Owner or designee. Housing-related items shall include, but not be limited to the following: ~~(a) material certification and test reports;~~ (b) housing drawings including: (1) outline drawings (2) piping and instrumentation diagrams (3) wiring diagrams (c) material list (d) welding procedures and procedure qualification records as required by applicable welding codes listed in HA-6140 (e) reports for tests an inspections required by HA-5000 (f) seismic and environmental qualification reports (g) operating, installation, and maintenance manuals.		
HA-9000	NAMEPLATES AND STAMPING		
HA-9100	General: All items manufactured under the requirements of this Section shall be identified to assure compliance with AA-9000 requirements. Records, as necessary to assure compliance with AA-8200, shall be maintained by the responsible organization in accordance with the approved quality assurance program.		
HA-9110	Stamping/Marking: Stamping/marking, as used herein, provides a means of maintaining identification of finished products for the purpose of retaining traceability of material.	NA	
HA-9111	Housings: Housings shall be provided with nameplates, in accordance with AA-9120, which relate the housings to the applicable design and fabrication documents. Housings fabricated in multiple sections need only one nameplate. ~~Each section shall have identification markings, observable after completed installation, which relate all sections.~~ Nameplates shall be visible after completed installation.		
HA-9112	Housing Accessories: Housing accessories shall be marked, stamped, or provided with a nameplate which shall relate to the design and fabrication drawings. Identification shall be observable after completed installation.		

ASME-AG-1-2003 CODE ON NUCLEAR AIR AND GAS TREATMENT COMPLIANCE REQUIREMENTS

Section CA (Conditioning Equipment)

Not Applicable

None of the applicable components listed in CA-1110 are part of the OGTS. Section CA states the following:

"Applicability:
This Section establishes requirements for the design, manufacture, testing, and documentation for forced circulation air cooling and heating coils, air washers, evaporative coolers, and electric heating coils used in nuclear safety-related air conditioning and air and gas treatment systems in nuclear facilities."

The applicable components called out in CA-1110, General Requirements, are eliminated as part of this ventilation system as follows:

- Forced circulation air cooling and heating coils > Air heater type used in ventilation system does not use forced air circulation but uses a glycol heat exchanger that may be covered in ASME AG-1 future section GA.
- Air washers > None in this ventilation system
- Evaporative coolers > None in this ventilation system
- Electric Heating Coils > Heater does not have electric heating coils to directly heat the process air. The heat exchanger referenced in the future GA section is the closest component description to the heater used in this ventilation system.

The excluded components are called in CA-1132, Exclusion of Components as follows:

"Conditioning equipment and associated accessories not included in this section are humidifiers, dehumidifiers of the adsorption type, infrared heating devices, controllers, valves, strainers, traps, pumps, refrigerant expansion valves, shell- and tube-type refrigerant evaporators and condensers, and compressors."

CH2MHill Environmental discussions with the Washington State Department of Health (WDOH) in May 2004 verified that WDOH considers this section only applicable to electric heaters with coils exposed directly to the air stream.

ASME-AG-1-2003 CODE ON NUCLEAR AIR AND GAS TREATMENT COMPLIANCE REQUIREMENTS

Source	Requirement Text	Verification/ Validation R- Review A-Analysis T-Test I-Inspection	Document Reference (Where requirement is incorporated)
FA	SECTION FA: Moisture Separators		
FA-1000	INTRODUCTION		
FA-1100 FA-1110 FA-1120 FA-1130	Scope: This section of the Code provides requirements for the performance, design, construction, acceptance testing, and quality assurance for moisture separators use in air and gas cleaning systems in nuclear safety-related air or gas treatment systems. Purpose: The purpose of this Code is to assure that moisture separators used in nuclear safety-related air and gas treatment systems are acceptable in all aspects of performance, design, construction, and testing. Applicability: This section applies to modular, impingement-type liquid droplet separators which typically employ layers of fibers, layers of mesh, or alternating layers of each. This section does not include the integration of the moisture separators into a complete air cleaning system. It only applies to moisture separators ready for installation in air cleaning systems. Definitions and Terms:		
FA-2000	REFERENCED DOCUMENTS		
FA-2000	Referenced Documents	NA	
FA-3000	MATERIALS		
FA-3100	Allowable Materials: *Pads:* the pad is usually constructed of glass fiber and/or corrosion resistant (stainless steel) wire. Other materials that have demonstrated equal or better corrosion resistance are allowable if they meet the requirements of UL 900, Class 1 filters and the design conditions. *Frames, cross-grids, and supports:* material shall meet the requirements of ASTM-A 240, Type 304, stainless steel or as required to meet design conditions. *Rivets:* when rivets are used for fabrication or attachment they shall be 300 series austenitic steel meeting the minimum requirements of ASTM-A 581, Type 303. *Gaskets:* the material for these parts shall be closed cell silicone rubber sponge, Grade SCE-43-1 or SCE-44-1, in accordance with ASTM-D 1056. *Adhesive:* adhesive used to splice gaskets or to fasten gasket to cell shall be compatible wit gasket material and appropriate to intended application.		
FA-3200	Limits: Materials of construction specified here for the moisture separator are typical. Alternative materials are acceptable as long as they meet the design conditions, UL 900, Class 1 filter requirements and pass the qualification test of FA-5000.		
FA-3300	Material Certification: The Manufacturer shall supply certification to the purchaser that all materials used in fabrication of the moisture separator conform to the requirements of FA-3200		
FA-4000	DESIGN CONDITIONS		
FA-4000	General: Design conditions for moisture separators are a maximum relative humidity of 100%, operating temperature of up to 285 degrees F, and a total integrated radiation environment of 8×10^7 Rads unless otherwise specified in the design specifications.		

ASME-AG-1-2003 CODE ON NUCLEAR AIR AND GAS TREATMENT COMPLIANCE REQUIREMENTS

Source	Requirement Text	Verification/ Validation R- Review A-Analysis T-Test I-Inspection	Document Reference (Where requirement is incorporated)
FA-4100	General Design: Moisture separators shall consist of frames designed to retain the deep bed fibrous pads. The pad shall be held in place in the frame by a retaining grid(s) or mechanism. Frames shall be designed to include drain holes to prevent re-entrainment of trapped liquids. Seals shall be provided as necessary to prevent bypass of entrained liquid droplets. (Refer to Non-mandatory Appendix FA-A for a typical configuration).		
FA-4210	Design Requirements: The moisture separator shall meet the requirements given in Table FA-4200-1.		
FA-4220	Pad: The pad shall be fabricated of approved material (FA-3100). Fabrication of the pad shall be controlled as to provide the required pad density.		
FA-4230	Moisture Separator Assembly: The frame shall be fabricated from corrosion resistant non-perforated steel sheet and shall be formed and assembled in a manner that no bypassing of the separator pad is possible. Drain holes shall be provided in the bottom of the frame. Design shall include provisions to assure that the pad is maintained in its operating position and that the pad does not settle, pack down, or pull away from the top or sides of the frame when installed.		
FA-4300 FA-4310	Structural Requirements: The moisture separators shall be designed in accordance with the structural requirements given in AA-4000 or qualified by test in accordance with AA-4350 or FA-5210.		
FA-4320	Load Definition: Loads to be considered in the structural design of the moisture separator defined in AA-4211 are as follows. (a) Deadweight (DW) consists of the metal frame that contains the pad, and bolting integral to the moisture separator. Instrumentation and ancillary equipment attached to the moisture separator are treated as external loads (EL). (b) The pressure (NOPD) differential which must be considered is from the upstream to downstream side of the pad. (c) The seismic acceleration and response spectra (OBE and SSE) shall be as provided in the Design Specification. Additional dynamic loads (ADL) will also be provided by the Design Specification, as applicable.		
FA-4330	Load Combinations: Unless stated otherwise in the Design Specification, the applicable loading conditions noted in Table AA-4212 for moisture separators are as follows: (a) Service Level A – DW + EL + NOPD (b) Service Level B – DW + EL + NOPD + OBE (c) Service Level C – DW + EL + NOPD + SSE + ADL (d) Service Level D – not applicable		
FA-4340	Acceptance Criteria: The acceptance criteria are listed in Table AA-4321. The design stress values S shall be 0.6 S_y.		
FA-5000	INSPECTION AND TESTING		
FA-5000	Inspection and Testing: Inspection and testing of the moisture separator shall conform to requirements of this Section and to specific requirements set forth in Article AA-5000.		
FA-5100	Qualification Tests: A design qualification test shall be performed on each specific moisture separator design. Four units of each design shall be tested to all requirements of FA-5200. New or revised designs shall require requalification.		

ASME-AG-1-2003 CODE ON NUCLEAR AIR AND GAS TREATMENT COMPLIANCE REQUIREMENTS

Source	Requirement Text	Verification/ Validation R- Review A-Analysis T-Test I-Inspection	Document Reference (Where requirement is incorporated)
FA-5200	Production Inspection and Testing: Each moisture separator to be delivered to the purchaser shall be inspected and tested in accordance with this Section.		
FA-5210	Dimensional Inspection: Overall dimensions shall be inspected to determine conformity to drawing requirements. Each moisture separator shall be inspected to ensure that it conforms to all dimensional requirements of its design. Any components, which will be "hidden" in the final assembly, shall be inspected prior to assembly. Measurements of the pad depth and density shall be made to determine that it conforms to design requirements. Location and placement stiffeners and supports shall be inspected to determine conformance to drawing requirements.		
FA-5220	Welding Inspection		
FA-5221	Spot welds shall be inspected visually in accordance with Subarticle AA-6332.		
FA-5222	Seal welds shall be inspected visually in accordance with Subarticle AA-6331.		
FA-5223	Fillet welds shall be inspected visually in accordance with Subarticle AA-6331.		
FA-5230	Moisture Separator Air Flow Resistance Test: With the moisture separator oriented in a test tunnel in its service orientation and operating at its rated airflow, the pressure differential across the separator shall not exceed the maximum pressure drop rating in Table FA-4200-1 for the clean, dry condition.		
FA-5240	Moisture Separator Rough Handling Qualifications: Four moisture separators shall be selected at random, hard-mounted to a rough-handling machine with sharp cutoff cams in the service orientation (Section FA-4100), and vibrated for 10 min at a frequency of 200 cycles per minute at an amplitude of 0.75 in. (19 mm). There shall be no settling of the mesh pad and no broken welds or other physical damage as a result of the rough handling.		
FA-5250	Moisture Separator Air Flow Resistance Test: Each of the four separators subjected to the rough handling test shall be individually mounted in a test tunnel in its service orientation and operated at its rated airflow. The pressure differential across the separator shall not exceed the ratings in Table FA-4200-1 for the clean dry condition and clean wet condition. The separator shall also demonstrate that it can withstand the minimum burst pressure differential given in Table FA-4200-1 without any visible physical damage or change in pressure drop (clean) at rated flow.		
FA-5260	Moisture Separator Performance Test: The four separators subjected to the rough handling test after successfully meeting the requirements of FA-5220 shall be tested to demonstrate compliance with the moisture removal and efficiency requirements of Table FA-4200-1.		
FA-6000	FABRICTION		
FA-6000	General: The moisture separators shall be fabricated using only those materials designated in FA-3000 and in accordance with the design outlined in FA-4000. All welding shall be in accordance with AA-6300. After manufacture, the units shall be tested and inspected in accordance with FA-5000.		
FA-6100	Repairs: All welds shall be repaired in accordance with AA-6000. Damaged materials shall be replaced.		
FA-6200	Cleaning: Metal parts of the moisture separator shall be cleaned and degreased in accordance with ASTM A-380 before any welding.		

ASME-AG-1-2003 CODE ON NUCLEAR AIR AND GAS TREATMENT COMPLIANCE REQUIREMENTS

Source	Requirement Text	Verification/ Validation R-Review A-Analysis T-Test I-Inspection	Document Reference (Where requirement is incorporated)
FA-7000	PACKAGING, SHIPPING, AND STORAGE		
FA-7100	Packaging: Each moisture separator shall be individually wrapped and enclosed in a wood or heavy corrugated paperboard carton with internal cushioning to decouple shock and vibration under accelerations up to 50 g. Separators shall be oriented in the carton or crate with the top of the frame up. The cartons or crates shall be clearly marked with the legend "THIS SIDE UP" or a similar imprint to ensure proper orientation of cartons and crates during handling, shipping, and storage.		
FA-7200	Loading for Shipment: Cartons shall be banded to skids or pallets in the orientation specified in FA-7100. Wood separators and strapping protectors shall be provided between tiers of cartons and above the topmost cartons in the load. Sufficient steel strapping shall be used to prevent shifting of the load on the skid or pallet. Separators shall not be stacked higher than three cartons on a skid or pallet. Skids shall not be stacked more than two high unless bracing is provided to support the upper tiers to prevent damage to the bottom separators.		
FA-7300	Storage: Storage shall be in accordance with ANSI/ASME NQA-2, Part 2.2, Level C.		
FA-8000	QUALITY ASSURANCE		
FA-8000	General: The moisture separator manufacturer shall establish and comply with a comprehensive quality assurance program and plan in accordance with Article AA-8000.		
FA-8100	Documentation: The following documentation shall be provided to the Purchaser: (a) Drawing giving outline and interface dimensions of the separator; (b) List of materials of construction; (c) Qualification Reports; (Seismic) (d) Certification of Performance (resistance and performance tests); (e) Installation and maintenance instructions; and (f) Storage and handling instructions.		
FA-9000	NAMEPLATES, STAMPINGS, AND MANUALS		
FA-9000	General: Each separator shall have a nameplate permanently attached to the top or side of the frame with the following information: (a) Moisture separator; (b) Manufacturer's name or symbol; (c) Weight of separator; (d) Pressure drop across separator (clean) airflow velocity specified; (e) Serial number (each separator shall be identified by a nonrecurring alpha-numeric symbol which shall also identify all documentation for the separator); (f) Direction of flow; and (g) Mounting orientation.		

ASME-AG-1-2003 CODE ON NUCLEAR AIR AND GAS TREATMENT COMPLIANCE REQUIREMENTS

Source	Requirement Text	Verification/ Validation R- Review A-Analysis T-Test I-Inspection	Document Reference (Where requirement is incorporated)
IA	SECTION IA: Instrumentation and Controls		
IA-1000	INTRODUCTION		
IA-1100 IA-1110 IA-1120 IA-1130	Scope: This section establishes requirements for the design, manufacture, installation, testing, and documentation for instrumentation, control components, and control panels used in conjunction with nuclear safety-related air and gas treatment systems. Purpose: The purpose of this section is to ensure that the instrumentation and control equipment included herein are adequate for use in safety-related systems. Applicability: This section applies only to permanently installed instrumentation and control systems associated with safety-related nuclear air and gas treatment systems. This section does not cover the requirements for portable instrumentation or controls used for in-place testing or inspection of nuclear air and gas treatment systems. This section does not cover the requirements of temporary instrumentation and controls used for testing or inspection of nuclear air and gas treatment systems during fabrication or installation. The responsibility for meeting the requirements of this section shall be assigned by the Owner or his designee using Nonmandatory Appendix IA-A as a guide. Definitions and Terms:		
IA-2000	REFERENCED DOCUMENTS		
IA-2000	Referenced Documents	NA	
IA-3000	MATERIALS		
IA-3100	Materials of Construction: All materials used shall have properties and composition suitable for the application as defined by the Design Specification and the operating environmental conditions as defined in Subarticle IA-4120. Materials shall be in conformance with the latest revision of the ASME and ASTM materials listed in Table IA-3100. Substitute materials shall be equivalent to or exceed the requirements in Table IA-3100. Materials that are part of the pressure boundary or support equipment shall meet the structural requirements of Article AA-4000.		
IA-3200	Nonpermissable Materials: Use of the following materials is prohibited in the manufacture and installation of instrumentation and controls in nuclear air and gas treatment systems: (a) mercury (b) radiologically unstable fluorinated polymers (c) asbestos		
IA-3300	Restricted Materials: All material shall be compatible with the operating environment. The following material shall not be used unless approved by the Owner or his designee: (a) Aluminum and zinc in the presence of corrosive vapors (b) Adjoining materials which may cause galvanic corrosion. (c) Chlorine producing materials, e.g. Polyvinylchloride (PVC).		

ASME-AG-1-2003 CODE ON NUCLEAR AIR AND GAS TREATMENT COMPLIANCE REQUIREMENTS

Source	Requirement Text	Verification/ Validation R-Review A-Analysis T-Test I-Inspection	Document Reference (Where requirement is incorporated)
IA-3400	Certification of Material: The Manufacturer shall make available a Certificate of Conformance for panel structural material and tubing to the ASTM numbers listed in Table IA-3100. For those materials which do not have ASTM ratings, testing should be performed per ASTM A370. All other components used in the construction of the panel assembly shall be provided with a Manufacturer's Certificate of Compliance to the requirements in the Design Specification.		
IA-4000	DESIGN REQUIREMENTS		
IA-4120	Design Specification: The Design Specification shall establish the purpose (design function) of the instrumentation and control components. The Design Specification shall also identify the instrumentation and control component safety classifications. For guidance in determining instrumentation and controls for nuclear air and gas treatment systems refer to Nonmandatory Appendix IA-C. The Design Specification shall provide requirements for the design, fabrication, and selection of instrumentation and control systems in accordance with this Code and shall include, as applicable: (a) Performance requirements for all plant operating modes (accident and normal) wherein the equipment is expected to perform an intended function. (b) Ambient and process operating conditions including the measured variable for each of the applicable operating modes described in Subarticle IA-4120(a). (1) Temperature: the minimum and maximum temperatures to which the instrumentation and control system devices will be subjected. (2) Pressure: the minimum and maximum pressures to which the instrumentation and control system devices will be subjected. (3) Relative Humidity: the minimum and maximum relative humidity's to which the instrumentation and control system devices will be subjected. (4) Radiation – alpha, beta, and gamma: the cumulative dosage levels and maximum dose rates to which the equipment will be subjected. (5) Chemicals: concentration and duration of chemical exposure to which the equipment will be subjected. (6) Electrical: all electrical power transients to which the instrumentation and control system devices may be subjected. Variations in parameters such as voltage, frequency, and current shall include minimum and maximum values and their duration. (7) Structural: structural loads to which the instrumentation and control system components will be subjected. The loads shall include as a minimum the applicable loads listed in para. AA-4211.		

ASME-AG-1-2003 CODE ON NUCLEAR AIR AND GAS TREATMENT COMPLIANCE REQUIREMENTS

Source	Requirement Text	Verification/ Validation R- Review A-Analysis T-Test I-Inspection	Document Reference (Where requirement is incorporated)
IA-4130	Manufacturer's Documentation Requirements: When required by the Design Specification, documentation provided by the Manufacturer to the Owner or his designee shall include the following, as applicable: (a) mounting connection details (b) weight and center of gravity (c) service connections, size, type, and locations (d) materials of construction (e) design life (f) environmental and seismic qualifications (g) mounting restrictions and instructions (h) loop and logic diagrams (i) electric schematic and wiring drawings (j) panel general arrangement and construction drawings (k) instrument piping and tubing drawings (l) Certificate of Conformance (m) Calibration procedures and data (n) Panel mounted instrument list including nameplate engraving (o) Maintenance and surveillance requirements		
IA-4140	Clarification of Code Applicability: Pressure retaining part whose design, materials, manufacture, test, and documentation are covered by ASME Section III shall be in accordance with the applicable requirements of that Code. When conflict exists between this Section and ASME Section III, the latter shall take precedence.		
IA-4200	Single Failure Criteria: Where redundant safety channels are required by the Design Specification, they shall meet the single failure requirements of ANSI/IEEE 379.		
IA-4300	Separation Criteria		
IA-4311	Physical separation of nuclear safety-related circuits and devices shall be in accordance with IEEE Standards 384.	NA	
IA-4312	Instrument Cables, including but not limited to computer, transducer, thermocouple, resistance temperature detector, or other low level signal cables shall be installed in separate raceways from power-carrying cables.		
IA-4321	Instrument sensing lines and interconnecting tubing for redundant safety channels shall be routed a minimum of 18 in. apart from each other, in areas free of or protected from missiles, high-energy jet streams, and pipe whips.	NA	
IA-4322	Where 18 in. of separation cannot be maintained each line shall be separated by a barrier extending at least 1 in. beyond the line of sight between redundant sensing lines. The design and installation of separation barrier shall be in accordance with the requirements of Article AA-4000.	NA	
IA-4323	Tubing shall not rest against surfaces that can cause wear or mechanical damage.		
IA-4324	Sensing lines shall be routed to ensure that the intended function is not jeopardized due to high vibration, abnormal temperature or stresses due to thermal expansion.		
IA-4325	Divisional separation of permanently filled capillaries, sensing lines and interconnecting tubing for nuclear safety-related devices shall be identified by color coding and tagging, as a minimum, at both ends.	NA	
IA-4326	Redundant tubing inside panels shall be separated by a minimum of 1 in.	NA	
IA-4400	Qualification of Equipment: All components shall be operable when exposed to the range of operating conditions specified during normal and accident conditions. Manufacturer installation and maintenance requirements that are needed to maintain qualification of the equipment shall be identified by the Manufacturer and followed in the qualification program.		

ASME-AG-1-2003 CODE ON NUCLEAR AIR AND GAS TREATMENT COMPLIANCE REQUIREMENTS

Source	Requirement Text	Verification/ Validation R- Review A-Analysis T-Test I-Inspection	Document Reference (Where requirement is incorporated)
IA-4410	Normal Operating Conditions: All components shall be specified, manufactured, and qualified to ensure operation within performance limits (e.g., accuracy) when exposed to their normal operating conditions. Normal operating conditions include but are not limited to exposure to the following: temperature, pressure, humidity, vibration, chemicals, power levels and fluctuations, radiation.		
IA-4420	Environmental Qualification: Safety related components operating in a harsh environment (as defined in 10CFR50.49) shall be qualified in accordance with IEEE Standard 323.	NA	
IA-4430	Seismic Qualification: Safety related components and mounting shall be seismically qualified using the guidelines of IEEE Standard 344 to the Owner's required response spectra, plus applicable amplification factors, for the components location and mounting. Components that do not perform a safety-related function but must retain their structural integrity so as not to damage, degrade or interfere with the performance of safety functions by any safety related equipment or components shall maintain their structural integrity when subjected to applicable seismic loads.	NA	
IA-4440	Qualification Documentation: The Owner shall have documentation demonstrating the qualification of components and showing the Owner's acceptance of the qualification testing and results.		
IA-4500	Panels		
IA-4511	Control panels shall be designed to support and protect the nuclear safety-related instrumentation and controls and to facilitate the monitoring and control of the mechanical equipment operation and performance.		
IA-4512	Instrumentation and control devices on the front and the inside of control panels shall be arranged in accordance with the requirements of ISA-RP60.3.		
IA-4513	Temperature limits inside a control panel shall be maintained within the allowable specified design temperature range for all components mounted inside the panel.		
IA-4521	Material for enclosures, stiffeners, braces, supports and frames shall be selected to meet the structural design requirements of Article AA-4000.		
IA-4522	Support shall be provided for incoming cables, wiring, piping, and other appurtenances.		
IA-4523	Subpanels and brackets for mounting instruments shall meet the structural loads and load combinations set forth by the Design Specification.		
IA-4524	Panels weighing over 200lbs shall be provided with removable lifting eyes or other means as required for loading, unloading, and moving the panels to their final installation location.		
IA-4525	All tubing, wire troughs or raceways used in the panel shall be of the metallic type or shall be manufactured from fire retardant or self-extinguishing material. Nonmetallic components and devices shall be manufactured from self-extinguishing materials, as classified by ASTM Standard D635, Standard Method of Test for Flammability of Self-Supportive Plastics.		
IA-4526	Panels shall be provided with an integral mounting plate or a separate structural channel member, as required by the Design Specification, to facilitate the mounting of panels on imbedment plates or anchor bolts provided in walls or floors.		
IA-4531	Wiring bundles shall be supported by such devices as clamps, straps, wire ties, wire wrap, etc. Uninsulated metallic/wire ties shall not be used.		
IA-4532	Insulating grommets shall be installed through all openings provided in partitions for the passage of wires or cables.		
IA-4533	Where a cable crosses a panel hinge, multi-stranded flexible wire shall be used. The cable shall also be secured on each side of the hinge, protected from damage.		

ASME-AG-1-2003 CODE ON NUCLEAR AIR AND GAS TREATMENT COMPLIANCE REQUIREMENTS

Source	Requirement Text	Verification/ Validation R- Review A-Analysis T-Test I-Inspection	Document Reference (Where requirement is incorporated)
IA-4534	Both ends of each wire shall be marked with color-coded wire markers as required by the Design Specification.		
IA-4535	All wiring shall have current capacity, mechanical strength, thermal rating, and insulation characteristics to meet the circuit and installation requirements required by the Design Specification and NFPA 70, para. 384-9. The wire insulation and Class 1E cables shall meet the requirements of ANSI/IEEE 383.		
IA-4536	Terminal blocks shall be installed on subpanels for terminating cables entering and leaving the panels, except that wire leads from thermocouples and certain other temperature-detecting devices may be brought directly to the terminal blocks in the instrument cases.		
IA-4537	Terminal blocks shall be provided with a marking strip, and terminals shall be clearly identified.		
IA-4538	The terminal blocks used for the termination of power voltage circuits, the control voltage circuits, and signal circuits (low voltage or current) shall be physically separate from each other.		
IA-4539	The control panel and its appurtenant equipment shall be connected to a ground bus inside the panel for personal safety. The method of grounding shall not compromise the independence of the redundant safety-related instruments and shall be in accordance with IEEE 1050. A method of terminating to the Owner's station ground bus shall be provided.	NA	
IA-4541	Power supplies within control panels shall be provided with branch circuit overload protection and a means to disconnect incoming power.		
IA-4542	Fuses shall be installed in locations free from obstructions.		
IA-4543	Fuses shall be sized to limit fault currents within the requirements of the cable insulation.		
IA-4551	Process sensing lines, fittings and valves installed within panels shall meet the requirements of Subarticle IA-4600.		
IA-4552	All non-process piping, tubing, or valves installed inside panels shall be in accordance with ANSI B31.1 unless otherwise required by the Design Specification.		
IA-4553	Tubing bends shall be smooth and formed to avoid flattened, kinked, or wrinkled bends.		
IA-4554	Panel piping or tubing installation shall not interfere with panel mounted instrument removal or access to the instrument for maintenance purposes.		
IA-4555	Isolation valves and test connections shall be installed in an easily accessible location to allow in-place calibration of all instrumentation.		
IA-4556	Isolation valves shall not be solely supported by the instrument tubing. Isolation valve supports shall be secured to the panel structure or substructure to prevent torque being applied to the tubing.		
IA-4557	Bulkhead fittings shall be used for termination of the control tubing from inside and outside of the panel.		
IA-4558	Instrument lines shall have permanent tags on both ends where required to assure proper identification. The type of material, color coding, and method of tagging shall be as required by the Design Specification.		
IA-4561	Where required, pressure reducing valves, complete with isolation valves, relief valves, and gauges, shall be installed inside the panel to provide a regulated instrument air supply to an instrument air header.		
IA-4562	The instrument air header shall be provided with isolation valves for each branch line.		
IA-4570	Permanent nameplates shall be installed on control panels to designate instrument function and tag number. Nameplates shall be in accordance with ISA-RP60.6 or the Owner's requirements.		

ASME-AG-1-2003 CODE ON NUCLEAR AIR AND GAS TREATMENT COMPLIANCE REQUIREMENTS

Source	Requirement Text	Verification/ Validation R-Review A-Analysis T-Test I-Inspection	Document Reference (Where requirement is incorporated)
IA-4600	Mounted Instruments and Sensors: Instruments shall not be mounted in locations where their performance will be adversely affected by equipment vibration. Instrument chassis and attached capillary tubing shall be supported to meet the seismic requirements for their particular location.		
IA-4700	Interconnecting Wiring for Skid Mounted Components: Interconnecting circuits between components mounted on a skid shall meet the requirements of the National Electric Code, Sections 250-59 and 250-95, and paras. IA-4534 and IA-4535.		
IA-4800	Instrument Sensing Lines and Field-Installed Tubing		
IA-4811	Instrument piping, tubing, isolation valves, and permanently filled capillaries in systems designed to ASME Section III shall be designed and constructed to the requirements of ISA Standard S67.02 as supplemented below: (a) Instrument sensing lines that are connected to Class 2 process piping or vessels shall not be less than Class 2 Seismic Category I from their connections to the process piping or vessel to and including the accessible isolation valve. (b) Instrument sensing lines that are connected to Class 2 processing piping or vessels and that are used to actuate or monitor safety related systems shall not be less than Class 2 Seismic Category I from their connections to the process piping or vessel to the sensing instrumentation. (c) Instrument sensing lines that are connected to Class 3 processing piping or vessels and that are used to actuate or monitor safety related systems shall not be less than Class 3 Seismic Category I from their connections to the process piping or vessel to the sensing instrumentation.	NA	
IA-4812	Instrument sensing lines not connected to ASME Section III Class 2 or 3 piping, vessels or ductwork shall meet the requirements of ANSI B31.1.		
IA-4813	Fitting material shall be compatible with the tube or pipe material to avoid galvanic corrosion and provide acceptable soldering or brazing joints.		
IA-4820	Tube Pitch and Condensate Trap: Where the potential for condensation or oil migration exists, condensate or oil traps with valved drain legs shall be provided at the low points of the tubing.		
IA-4831	Sensing lines and tubing shall be installed in a continuous support system such as metal trays wherever practical. Sensing lines and tubing shall be run along walls, columns and ceilings to avoid damage by pipe whip, missiles. Jet forces or falling objects.		
IA-4832	The support system for instrument sensing or interconnecting lines shall be taken into account in the tray or duct hanger loading requirements.		
IA-4833	Supports for nuclear safety-related sensing lines shall be designed using the requirements of Article AA-4000.		
IA-4834	Loads such as thermal expansion and weight of insulation shall be evaluated in accordance with para. AA-4212 for instrument tubing.		
IA-4841	Root valves shall be located in the vicinity of the point of connection to the process pipe or duct.		
IA-4842	Isolation valves and test connections shall be installed in a location to allow in-place calibration of instrumentation.		
IA-4900	Instrument Setpoints		
IA-4910	The Owner shall establish setpoints for nuclear safety-related air and gas treatment systems with allowance for loop inaccuracy and have provision for margin to assure that systems perform within their design limits.		
IA-4920	Safety-related setpoints and loop error determinations shall be determined using the methodology of ISA Standard S67.04.		
IA-5000	INSPECTION AND TESTING		

ASME-AG-1-2003 CODE ON NUCLEAR AIR AND GAS TREATMENT COMPLIANCE REQUIREMENTS

Source	Requirement Text	Verification/ Validation R- Review A-Analysis T-Test I-Inspection	Document Reference (Where requirement is incorporated)
IA-5100	Inspection and testing of instrumentation and control components shall be in accordance with IEEE 336. In addition, the requirements of Article AA-5000 supplemented by the following shall apply.		
IA-5111	Written procedures with acceptance criteria for visual examination, inspection and functional testing shall be developed in accordance with Subarticle AA-5120 and Article TA-3000 for instrumentation and control components.		
IA-5112	The procedures shall be reviewed and approved by the Owner or designee.		
IA-5120	Test Reports: After inspection and testing is completed a written test report shall be prepared by personnel performing the test in accordance with Subarticle AA-5250.		
IA-5200	Visual Inspection: Visual inspection shall be performed in accordance with a written checklist per Subarticle AA-5240. For example of a checklist see Nonmandatory Appendix IA-B.		
IA-5220	Methods of Visual Examination: Visual examination shall be performed by either method of direct visual or remote visual examination in accordance with Subarticle AA-5220.		
IA-5230	Written Procedures: Visual examination shall be performed in accordance with approved written procedures.		
IA-5300	Calibration and Testing: Manufacturer's calibration and test instrumentation shall be in accordance with Article TA-3000 and traceable to NIST.		
IA-5311	All instruments and devices shall be calibrated and tested in accordance with the procedures developed for para. IA-5111.		
IA-5312	Wiring for control power shall be subjected to a Megger test at the panel assembly facility. Megger or other high voltage test shall not be applied to instrumentation or shielded cables.		
IA-5313	An electrical continuity test shall be performed to demonstrate the correctness of the wiring termination of all panel mounted instruments. Functional tests shall be performed in accordance with written test procedures approved by the Owner or designee.		
IA-5321	All local mounted instruments and devices shall be calibrated and tested in accordance with the Manufacturer's calibration and test procedures and the procedures developed for para. IA-5111.		
IA-5331	Pressure testing of pneumatic control circuits shall be performed in accordance with ISA Standard RP7.1.	NA	
IA-5332	Pressure testing of sensing lines shall be performed in accordance with ANSI/ASME B31.1 or ASME Section III as applicable		
IA-6000	PANEL FABRICATION AND ASSEMBLY		
IA-6100	General Requirements: In addition to the requirements of Article A-6000, the following requirements shall apply.		
IA-6111.1	Materials: Materials to be used in the fabrication of control panels, instruments, devices, components, parts, sensing lines; and support systems, anchors and bolts shall conform to the requirements of Article IA-3000.		
IA-6111.2	Materials: Thickness of plate material for the enclosure skin, stiffeners braces, and frame shall be selected to meet the structural loadings and applicable seismic requirements of Article IA-4000 and the Design Specification.		
IA-6112	Repair of materials and surfaces with defects shall be performed in accordance with para. AA-6123.		
IA-6200	Fabrication Process		

ASME-AG-1-2003 CODE ON NUCLEAR AIR AND GAS TREATMENT COMPLIANCE REQUIREMENTS

Source	Requirement Text	Verification/ Validation R- Review A-Analysis T-Test I-Inspection	Document Reference (Where requirement is incorporated)
IA-6210	Cutting, forming, and bending shall be in accordance with Sub-article AA-6210.		
IA-6211	Thermal cutting shall be in accordance with para. AA-6212		
IA-6212.1	Panel Fabrication by Welding: When the control panel enclosure is fabricated by welding more than one piece of sheet steel, the welding joint shall be made in accordance with the requirements of Sub-article AA-6300. Warping or distortion from cutting, punching or welding operations shall not extend beyond the outer edge of the panel mounted device.		
IA-6212.2	Panel Fabrication by Welding: The control panel shall be all welded sheet steel or plate construction. Reinforcing shall be provided so that the deflection due to the added weight of the instruments will not exceed 0.125 in. for any 4 ft of panel surface.		
IA-6220	Fittings and Aligning: Fitting and aligning shall be in accordance with Sub-article AA-6230.		
IA-6230	Mechanical Joints: Mechanical joints shall be in accordance with Sub-article AA-6230.		
IA-6300	Welding: Welding shall be in accordance with Sub-article AA-6300.		
IA-6400	Brazing: Brazing shall be in accordance with Sub-article AA-6400.		
IA-6500	Cleaning and Coating: Cleaning and coating shall be in accordance with Sub-article AA-6500.		
IA-6600	Installation Requirements – Handling and Rigging: Handling and rigging shall be in accordance with Sub-article AA-6610.		
IA-6700	Material Identification: Materials of construction of the control panel shall be as specified by the Owner or designee. A Certificate of Conformance shall be supplied as required by the Design Specification and Sub-article IA-3400.		
IA-7000	PACKAGING, SHIPPING, RECEIVING, STORAGE, AND HANDLING		
IA-7100	General Requirements: Packaging, shipping, receiving, storage, and handling of all control panels, instrumentation, and accessories shall be in accordance with Article AA-7000 and ANSI/ASME NQA-2, Part 2.2. Any control panel made of items requiring different levels of handling shall be classified to the highest level designated for any of the respective items.		
IA-7200	Packaging: All control panels and sensitive instrumentation (if packaged separately) shall meet the requirements of packaging level B in accordance with ANSI/ASME NQA-2, Part 2.2 paras. 2.2.2 and 3.2.2. When bulk accessories are packaged separately (i.e., valves, sensing lines, instrument cables) the packaging shall meet the requirements of packaging level C in accordance with ANSI/ASME NQA-2, Part 2.2 paras. 2.2.3 and 3.2.3. Identification and marking on the outside of all packages shall be maintained and weather-proofed.		
IA-7300	Shipping: The mode of transportation used shall be consistent with the protection classification of the item and with the packaging method employed.		
IA-7410	Inspection (Receiving): Preliminary visual inspection shall be performed prior to or immediately after unloading to determine if any damage occurred during shipping. Unless the packaging marking prohibits unpacking, the contents of all shipments shall be visually inspected to verify that the specified packaging and shipping requirements have been maintained. The inspection shall be performed in an area equivalent to the level of storage requirement for the item (see Sub-article IA-7500).		

ASME-AG-1-2003 CODE ON NUCLEAR AIR AND GAS TREATMENT COMPLIANCE REQUIREMENTS

Source	Requirement Text	Verification/ Validation R- Review A-Analysis T-Test I-Inspection	Document Reference (Where requirement is incorporated)
IA-7420	Disposition: Packages shall be controlled in accordance with ASME NQA-1.		
IA-7500	Storage: Control panels and sensitive instruments shall be stored indoors. This area shall have paved floor or equal and shall not be subject to flooding. The area shall be well ventilated and shall be provided with uniform temperature control to prevent condensation and corrosion. Original packaging is recommended if item is to be stored for a long period of time. Miscellaneous accessories such as valves, sensing lines, and instrument cables shall be stored as described above, except that temperature control is not required. All items shall be plainly marked so that they are easily identified, and shall be stored in a manner as to permit ready access for inspection, maintenance, or retrieval without excessive handling to minimize risk of damage.		
IA-8000	QUALITY ASSURANCE REQUIREMENTS		
IA-8100	General: Quality assurance for instrumentation and controls shall be in accordance with the requirements of Article AA-8000 and the requirements below.		
IA-8210 IA-8211 IA-8212	Test Reports and Data: The following test reports and data supporting the design and installation of instrumentation and control devices used in nuclear facilities air and gas treatment systems shall be maintained in records: (1) All records and procedures that are required to be maintained by ANSI B31.1 for the portion of installation designed to ANSI B31.1 and ASME Section III for the portions of installation designed to ANSI B31.1 and ASME Section III. (2) Documentation as identified in Sub-articles IA-4130 and IA-4440.		
IA-9000	NAMEPLATES		
IA-9100	General: Permanent types of nameplates shall be designed, manufactured, and installed in accordance with the requirements of Article AA-9000 and the requirements below.		
IA-9200	Requirements: Each instrument and control device shall be provided with a permanent type of Manufacturer's nameplate.		
IA-9310	Nameplate (Material): Nameplates supplied and installed by the manufacturer shall be made from noncorrosive material.		
IA-9320	Nameplate (Size): Nameplates shall be sized to accommodate all pertinent information.		
IA-9330	Information: The following information shall be stamped or engraved on each nameplate in lieu of requirements of Sub-article AA-9120: (a) Manufacturer; (b) Model or catalog number; (c) Serial number; (d) Range.		

ASME-AG-1-2003 CODE ON NUCLEAR AIR AND GAS TREATMENT COMPLIANCE REQUIREMENTS

Source	Requirement Text	Verification/ Validation R- Review A-Analysis T-Test I-Inspection	Document Reference (Where requirement is incorporated)
TA	SECTION TA: Field Testing of Air Treatment Systems	NA	
Mandatory Appendix TA-I	Visual Inspection Items	NA	
Mandatory Appendix TA-II	Structural Capability Test Procedural Guidelines		
TA-II-1000	Summary of Method: Ducts and housings which form the pressure boundary of the system shall be pressure tested, with air, to the structural capability pressure to verify that there is no breach of integrity or unacceptable distortion. Fans, dampers, and other components which form parts of the pressure boundary shall be installed and tested with the ducts and housings to verify the interface connection integrity.		
TA-II-2000	Prerequisites: Construction, modifications, or repairs affecting the test boundary shall be complete and inlet and discharge openings of the duct or housing sealed before the test is started. Electrical, piping, and instrument connections shall be complete and all permanent seals installed before the test is started.		
TA-II-3000	Test Equipment: (a) pressurization source (b) covers to seal test boundaries (c) pressure indicating device accurate to +/-0.1 in. w.g.		
TA-II-4000	Procedural Guidelines: (a) Connect the pressurization source to the duct or housing. (b) Install instrumentation to indicate the pressure inside the duct or housing being tested. (c) Start the pressurization source and operate until the structural capability pressure is achieved. Maintain pressure for the duration of the inspection. (d) Inspect the test boundary for breach of integrity or distortion. (e) Release pressure and inspect for permanent distortion.		
TA-II-5000	Acceptance Criteria: All distortion shall be measured and compared to the acceptance limits of the Owner's Design Specification.		
Mandatory Appendix TA-III	Duct and Housing Leak Test Procedural Guidelines		
TA-III-1100	Summary of Method: Ducts and housings that form the pressure boundary of the system shall be leak tested, with air, using one of the methods listed in this procedure. Either method may be used and will produce a similar result. The constant pressure method is useful in testing small volumes whereas the pressure decay method is useful in testing large volumes. Fans, dampers, and other components that are part of the pressure boundary shall be installed and tested with the pressure boundary to verify interface connection leak tightness. If the measured leak rate is in excess of the acceptance criteria, the leaks shall be located by one of the methods listed in this procedure. After leaks are repaired, the duct and housing shall be re-tested to verify leak tightness.		
TA-III-2000	Prerequisites: Construction, modifications, and repairs affecting the test boundary shall be complete and the inlet and discharge openings of the duct or housing sealed before the test is started. All electrical, piping, and instrument connections shall be complete and all permanent seals shall be installed before the test is started. For pressure decay testing, the volume of the pressure test boundary must be calculated.		

ASME-AG-1-2003 CODE ON NUCLEAR AIR AND GAS TREATMENT COMPLIANCE REQUIREMENTS

Source	Requirement Text	Verification/ Validation R- Review A-Analysis T-Test I-Inspection	Document Reference (Where requirement is incorporated)
TA-III-3000	Test Equipment: (a) pressurization source (b) covers to seal test boundaries (c) clock or timer accurate to +/-1.0 second (d) pressure indicating device accurate to +/- 0.1 in. (e) flowmeter or totalizing gas volume meter accurate to +/-5% (constant pressure method) (f) temperature indicating device accurate to +/-0.5 degrees F (g) bubble solution for detecting air leaks (bubble method) (h) optional portable electronic sound detection equipment (audible leak method) (i) barometer		
TA-III-4100	Constant Pressure Method...(see this article in AG-1 for test procedure)		
TA-III-4200	Pressure Decay Test...(see this article in AG-1 for test procedure)		
TA-III-4300	Acceptance Criteria: If the calculated leak rate exceeds the Owner's acceptance criteria, locate leaks in accordance with one of the techniques outlined in III-4400 or III-4500.		
TA-III-4400	Bubble Leak Location Method...(see this article in AG-1 for test procedure)		
TA-III-4500	Audible Leak Location Method...(see this article in AG-1 for test procedure)		
Mandatory Appendix TA-IV	Airflow Distribution Test Procedure Guidelines (for measuring the air flow distribution across the face of moisture separator, pre-filter, HEPA filter, and adsorber banks.)	NA	
Mandatory Appendix TA-V	Air-Aerosol Mixing Test Procedure Guidelines	NA (Not part of this specification)	
Mandatory Appendix TA-VI	HEPA Filter Bank In-Place Leak Test Procedural Guidelines	NA (Not part of this specification)	
Mandatory Appendix TA-VII	Adsorber Bank In-Place Leak Test Procedural Guidelines	NA (Not part of this specification)	
Mandatory Appendix TA-VIII	Refrigerant Piping and Coil System Leak Test Procedural Guidelines	NA	

DMJM technology

amec

TECHNICAL SPECIFICATION

PROJECT:	**Final DBVS Design**	**145579-D-SP-037**	**REV. 1**
PROJECT NO.:	**145579**	**WET SCRUBBER SKID ASSEMBLY DESIGN AND FABRICATION**	
CLIENT:	**AMEC E&E - Richland, Washington**		

Appendix C

Example Data Sheets

Title	Number of Pages
Cover	1
Butterfly Control Valves, Example	1
Full Port Ball Valve, Example	1
Check Valve, Example	1
Quick Disconnects, Example	1
Single-Phase Transformer, Example	1
Distribution Panel, Example	1
Nonfused Disconnect Switch, Example	1
Lighting Fixtures, Example	1
Local Control Station, Example	1
Total Data Sheet Pages:	10

amec

Butterfly Control Valves				SPEC. No. 145579-D-SP-037		
NO.	BY	DATE	REVISION	SHEET 1	OF 1	DATE 11/4/2005
				BY JI	CHK'D	APPR.
				P.O.		
				REQ.		

Project: Demonstration Bulk Vitrification Project

1 #Tag No.: DBVS-SCBR-HV-xxx Service: Scrubber Sys P&ID : DBVS-SK-P101
Fluid Code: Desc. : Line no.:

		Units	Max Flow	Norm Flow	Min Flow	Shut Off	
2	* Flow rate	ACFM				-	
3	* Inlet Pressure P1	in w.g.					
4	* Outlet Pressure P2	in w.g.					
	* Differential Pressure dP = P1 - P2	in w.g.					
5	* Inlet Temperature	F					
6	* Spec.Weight / Spec.Gravity / Mol. Weight					-	
7	* Viscosity / Specific Heats Ratio	cp				-	
8	* Vapor Pressure Pv / Crit Press PC					-	
9	* Required Cv					-	Flow Thru
10	* Travel	%				0	
11	* Predicted Sound press. level (at 1 m.)	dBA				-	Max. 85 dbA
12	Compressibility (Z)						
	Solids conc. / Particule size			0%			

SERVICE CONDITIONS

LINE

13 Pipe Line Size In Out
14 Pipe Sch./W.thick. In Out
15 Mater'l ANSI Ins.

VALVE BODY / BONNET

16 * Type Butterfly Valve * Std / Full port Full
17 * Size ANSI class
18 * Valve max P / T°
19 * Manufacturer Keystone Series
* Model
20 * Body / Bonnet Mater'l
21 * Liner Mater'l / In.Diam.
22 End In
23 Connection Out
24 Flange Face Finish
* Face to Face dim.
25 End Ext / Mater'l
26 * Flow Direction
27 * Type of Bonnet
28 * Lube & Iso Valve
29 * Packing Material
30 * Packing Type

TRIM

32 * Type
33 * Size * Rated Travel
34 * Characteristic
35 * Balanced / Unbalanced
36 * Rated * Cv * FL * Xt
37 * Plug/Ball/Disk Matr'l
38 * Seat Material
39 * Cage/Guide Mtr'l
40 * Stem Material
41

ACCESS.

43 NEC Class Group Div.
44
45

ACTUATOR

53 * Type
54 * Manufacturer Keystone Series
* Model
55 * Size * Eff Area
57 Action Open / Close / Lock
58 * Max Allowable Press.
59 * Min Required Press.
60 Available Air Supply Pressure :
61 Max Min
62 * Bench Range /
63 Actuator Orientation
64 Handwh'l Type
65 Air Failure Valve Set at
66

POSITIONER

67 Input Signal
68 * Type
Smart Communic.
69 * Mfr & Model Keystone Series
70 * On Incr. Signal, Output: Incr. / Decr.
71 Gauges By pass
72 * Cam Charact's.
73 * Air Port size * Boosters

SWITCHES

74 Type 24VDC Proximity (3) Quantity
75 * Mfr & Model Keystone Series
76 Nb. contacts / rating
77 Actuation Points
78

AIR SET

79 * Mfr & Model
80 * Set Press.
81 Filter Gauge

TESTS

83 * Hydro Pressure
84 ANSI / FCI Leak. Class
85 Test Results submittals required

NOTES

49
50

S20.50

amec

Valves				SPEC. No. 145579-D-SP-037		
NO.	BY	DATE	REVISION	SHEET 1	OF 1	DATE 11/4/2005
				BY JI	CHK'D	APPR.
				P.O.		
				REQ.		

roject: Demonstration Bulk Vitrification Project

1. Type FULL PORT BALL VALVE
2. Body Size
3. Body Material
4. Port Size
5. Number of Ports
6. Guiding
7. End Conn/Rating
8. Packing Material/Type
9. Lubricator
10. Iso Valve
11. Bonnet Type
12. Trim From
13. Trim Material Seat/Plug
14. Shaft Material
15. Required Seat Tightness
16. Max Allow Sound Level dBA

Design Pressure
Design Temperature

17. MFR. FLOWTEK
18. Model No.
19. Flow Composition
20. Required Cv
21. Inlet Press Norm/Max
22. Flow Rate Norm/Max
23. dP/Max Shut Off dP
24. Temp Oper/Max
25. Oper sp gr/Visc
26. % Superheat/Flash
27. Crit Press/% Solids
28. Mol Wt/Vapor
29. Pred. Sound Level dBA
30. Supplier
31. Address
32. Phone
33. Fax

Rev.	*Tag. No.	Line no. /Equip.	P&ID	Dia.Seal Matr'l	T° Max.	Pressure Norm.	Pressure Max.	Pressure Range	Service	Notes
									Raw Water, Caustic	

NOTES

S20.41

amec

Valves				SPEC. No. 145579-D-SP-037	
NO.	BY	DATE	REVISION	SHEET 1 OF 1	DATE 11/4/2005
				BY JI / CHK'D	APPR.
				P.O.	
				REQ.	

Project: Demonstration Bulk Vitrification Project

1. Type CHECK VALVE
2. Body Size
3. Body Material
4. Port Size
5. Number of Ports
6. Guiding
7. End Conn/Rating
8. Packing Material/Type
9. Lubricator
10. Iso Valve
11. Bonnet Type
12. Trim From
13. Trim Material Seat/Plug
14. Shaft Material
15. Required Seat Tightness
16. Max Allow Sound Level dBA

Design Pressure
Design Temperature

17. MFR. CHECK-ALL <-
18. Model No. <-
<-
19. Flow Composition <-
20. Required Cv <-
21. Inlet Press Norm/Max <-
22. Flow Rate Norm/Max <-
23. dP/Max Shut Off dP <-
24. Temp Oper/Max <-
25. Oper sp gr/Visc <-
26. % Superheat/Flash <-
27. Crit Press/% Solids <-
28. Mol Wt/Vapor <-
29. Pred. Sound Level dBA <-
<-
30. Supplier <-
31. Address <-
32. Phone <-
33. Fax <-

Rev.	*Tag. No.	Line no. /Equip.	P&ID	Dia.Seal Matr'l	T° Max.	Pressure Norm.	Pressure Max.	Pressure Range	Service	Notes

NOTES

S20.41

amec

Quick Disconnects				SPEC. No. 145579-D-SP-037		
NO.	BY	DATE	REVISION	SHEET 1	OF 1	DATE 11/4/2005
				BY JI	CHK'D	APPR.
				P.O.		
				REQ.		

roject: Demonstration Bulk Vitrification Project

1. Type "Andrews" / "Boss-Lock" Type A Adapters
2. Material

Coupling

3. Body Size
4. NPT Thread Size
5. Flow at 100 psi

4. MFR. DIXON VALVE & COUPLING
5. Model No.

6. Supplier DIXON VALVE & COUPLING
7. Address PORTLAND, OR
8. Phone (503) 289-0400
9. Fax -

Rev.	*Tag. No.	Line no. /Equip.	P&ID	Dia.Seal Matr'l	T° Max.	Pressure Norm.	Pressure Max.	Pressure Range	Service	Notes

NOTES

S20.41

amec

Single-Phase Transformer				SPEC. No. 145579-D-SP-037	
NO.	BY	DATE	REVISION	SHEET 1 OF 1	DATE 11/4/2005
				BY KJM	CHK'D / APPR.
				P.O.	
				REQ.	

Project: Demonstration Bulk Vitrification Project

1. Volts: 480-120/240V ac, single-phase
2. kVA:
3. Coil material: copper
4. Temperature rise: 115 deg C (min)

6. MFR.
7. Model No.

8. Supplier
9. Address
10. Phone
11. Fax

Rev.	*Tag. No.	Line no. /Equip.	P&ID						Notes

NOTES

S20.41

amec

Distribution Panel				SPEC. No. 145579-D-SP-037		
NO.	BY	DATE	REVISION	SHEET 1	OF 1	DATE 11/4/2005
				BY JJI	CHK'D	APPR.
				P.O.		
				REQ.		

Project: Demonstration Bulk Vitrification Project

1. Volts	120/240V ac, single-phase	9. MFR.	
2. Amps		10. Model No.	
3. Breaker type	Bolt-on		
4. Main Breaker	yes		
4.a. Amps (trip)			
4.b. MFR			
4.c. Model No.			
5. Therm. Mag. breakers	yes		
5.a. MFR			
5.b. Model No.			
6. GFCI breakers	yes		
6.a. MFR			
6.b. Model No.			
7. GFPE breakers	yes		
7.a. MFR			
7.b. Model No.		11. Supplier	
8. Documentation	detailed panel schedule, inside door	12. Address	
		13. Phone	
		14. Fax	

Rev.	*Tag. No.	Line no. /Equip.	P&ID							Notes

NOTES

S20.41

amec

Nonfused Disconnect Switch				SPEC. No. 143643-D-SP-037		
NO.	BY	DATE	REVISION	SHEET 1	OF 1	DATE 11/4/2005
				BY JJI	CHK'D	APPR.
				P.O.		
				REQ.		

Project: Demonstration Bulk Vitrification Project

1. Volts: 480V ac
2. Amps (frame):
3. Poles: 3
4. Enclosure: NEMA 4
5. Options: 1 NO, 1 NC auxiliary contact (for motor circuits only)

6. MFR.
7. Model No.
8. Supplier
9. Address
10. Phone
11. Fax

Rev.	*Tag. No.	Line no. /Equip.	P&ID						Notes

NOTES

S20.41

amec

Lighting Fixtures				SPEC. No. 145579-D-SP-037		
NO.	BY	DATE	REVISION	SHEET 1	OF 1	DATE 11/4/2005
				BY KJM	CHK'D	APPR.
				P.O.		
				REQ.		

Project: Demonstration Bulk Vitrification Project

1. Volts
2. Watts
3. Quantity
4. Fixture type
5. Lamp Type
6. Ballast
7. Diffuser
8. Mounting
9. Operating temp. range

9. MFR.
10. Iodel N

11. Supplier
12. Address
13. Phone
14. Fax

Rev.	*Tag. No.	Line no. /Equip.	P&ID							Notes

NOTES

S20.41

amec

TECHNICAL DATA SHEETS

PROJECT:	Final DBVS Design	145579-D-SP-037	
ROJECT NO.:	145579	Local Control Station	
LIENT:	AMEC E&E - Richland Washington		

No. Required	TBA	Area	
PFD #		Stream No.	
		Quality Assurance Level	Commercial

Operating Conditions			Rev				Rev
Location (Indoors/Outdoors)	Outdoors			Operation	- Days per year	365	
Operation (continuous/intermittent)	Continuous				- Hours per day	24	
Max. Ambient Air Temp. (° F)	115			Availability	%	90	
Min Ambient Air Temp. (° F)	-25			Elevation (ft)		663	
Equipment Numbers	See Note 2			Environment	- Radioactive	Yes	
					- Toxic	No	
					- Corrosive	No	
					- Flammable	No	

Equipment data		A-B Part #		Materials		
Enclosure (surface mount))	NEMA 4	800T-4TZ		Enclosure	Die Cast	
Dielectric strength (> 1 minute)	>1000V			Standard Legend Plate	Aluminum	
Push Button-red (1N.O+1N.C.) "Start"	Momentary	800T-A6A				
Push Button-green (1N.O+1N.C.) "Stop"	Momentary	800T-A1A				
Pilot light -red (120VAC, LED type with transformer)	Running	800T-PH16R				
Pilot light -green (120VAC, LED type with transforme	Ready	800T-PH16G				
Standard legend plate - START		800T-X547				
Standard legend plate - STOP		800T-X550				
Voltage (continuous) (v)	120					
Ampere (max continuous rate) (A)	10					
Approvals UL Listed						

nish				Enclosure Layout		
By VENDOR (Yes/No)	Yes			Conduit entries (bottom only) *		
Painting - External *						
- Internal *						

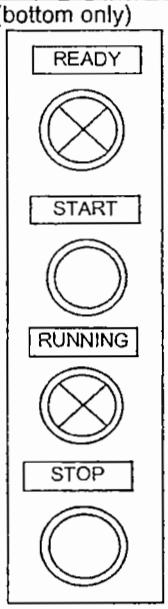

Comments/Notes:

1) All items with an * shall be filled in by the Seller.
2) Allen-Bradley Catalog have been indicated. Approved equals may be submitted.