This document was too large to scan as a single document. It has been divided into smaller sections.

Section 6 of 13

Document Information			
Document #	RPP-24544	Revision	1D
Title	DEMONSTRATION BULK VITRIFICATION SYS INDEPENDENT QUALIFIED REGISTERED PROFESSIONAL ENGINEER (IQRPE & RCRA DESIGN REVIEW PACKAGE		
Date	05/11/2006		
Originator	SHUFORD DH	ORG CO	CH2M
Recipient		Recipient Co.	
References	ECN-723118-R5, RPP-24544-R0, RPP-24544-R1, RPP-24544-R1A, RPP-24544-R1B, RPP-24544-R1C, EDT-821657, ECN-723118-R0, ECN-723118-R1, ECN-723118-R3, ECN-723118-R4		
Keywords	SUPPL TREATMENT		
Projects			

0069792

6/13

amec

CALCULATION SHEET

CALC. NO.:	145579-V-CA-005	REV:	1	DATE:	March 26, 2006
CALC. TITLE:	Off-Gas Treatment System Pipe Stress Analysis				
PROJECT NO.:	145579	PROJECT TITLE:	Final DBVS Design		

Attachment 14: Expansion Joint Schedule

NOTE: This cover sheet represents the approval signatures of the originator and checker for all pages of this attachment

ORIGINATOR:	DATE:	CHECKER:	DATE:
Kevin M. Jones KMJ	3/26/06	J. Van Corbach JVC	3/26/06

Calculation 145579-V-CA-005 Model 1 Expansion Joint Schedule

Tag Number	Node Numbers	X-Dspl (max)	X-Dspl (min)	Y-Dspl (max)	Y-Dspl (min)	Z-Dspl (max)	Z-Dspl (min)	X - Max Total Dspl	Y - Max Total Dspl	Z - Max Total Dspl
EJ-407	N95	-0.012	-0.024	0.009	0.007	-0.181	-0.253	0.024	0.009	**0.253**
	N96	0	0	0	0	0	0	Lateral	Lateral	**Axial**
EJ-502	N198	0.012	0.009	0.048	0.046	-1.537	-1.544	0.017	0.067	**1.725**
	N199	-0.004	-0.005	-0.018	-0.019	0.181	0.181	Lateral	Lateral	**Axial**
EJ-503	N84	0.121	-0.003	0.733	0.733	0.57	0.425	0.988	**1.333**	0.904
	N90	-0.805	-0.867	-0.577	-0.6	0.479	-0.28	Lateral	**Axial**	Lateral
EJ-601	N142	0	-0.001	0.183	0.024	0.161	-0.881	0.041	0.146	**1.763**
	N148	0.04	-0.021	0.17	0.124	0.882	0.395	Lateral	Lateral	**Axial**
EJ-602	N117	0.001	0	0	0	-0.087	-0.087	0.13	0.384	**0.937**
	N118	0.068	-0.129	0.384	0.372	0.85	0.278	Lateral	Lateral	**Axial**
EJ-603	N127	0	0	0	0	0.446	-0.116	0.002	0.001	**0.526**
	N128	0	-0.002	0.001	0	0.08	0.08	Lateral	Lateral	**Axial**
EJ-622	N208	0	0	-1.713	-1.746	0	0	0.009	**1.819**	0.02
	N209	0.009	0	0.073	0.073	0.012	-0.02	Lateral	**Axial**	Lateral
EJ-623	N210	0.092	0.026	-0.296	-0.34	-0.843	-0.969	0.056	0.344	**2.414**
	N212	0.082	0.074	0.004	0.001	1.445	1.276	Lateral	Lateral	**Axial**
EJ-627	N67	0.13	0.009	-0.087	-0.14	-0.072	-0.078	0.328	0.262	**0.174**
	N68	-0.055	-0.198	0.122	0.046	0.096	0.087	Lateral	Lateral	**Axial**
EJ-638	N21	-0.245	-0.265	0.328	0.218	0.543	-0.472	0.265	0.328	**0.543**
	N24	0	0	0	0	0	0	Lateral	Lateral	**Axial**
EJ	N206	0	0	0	0	0	0	0.399	0	**0.065**
	N274	0.399	0.381	0	0	-0.021	-0.065	Lateral	Lateral	**Axial**

Calculation 145579-V-CA-005 Model 2 Expansion Joint Schedule										
Tag Number	Node Numbers	X-Dspl (max)	X-Dspl (min)	Y-Dspl (max)	Y-Dspl (min)	Z-Dspl (max)	Z-Dspl (min)	X - Max Total Dspl	Y - Max Total Dspl	Z - Max Total Dspl
EJ-624	N33	0	0	0	-0.163	0	0	0	**0.458**	0
	N73A	0	0	0.295	-0.033	0	0	Lateral	**Axial**	Lateral
EJ-625	N30	0	0	0	-0.163	0	0	0.001	**0.345**	0
	N72A	0.001	0	0.182	-0.101	0	0	Lateral	**Axial**	Lateral
EJ-626	N63A	0	-0.576	0.026	0.017	0	0	**0.951**	0.009	0
	N64A	0.375	0	0.024	0.017	0	0	**Axial**	Lateral	Lateral
EJ-628	N16	0.013	0	0.001	0	0.086	0	0.013	0.002	**1.059**
	N64	0.013	0	0.002	0.002	0	-0.973	Lateral	Lateral	**Axial**
EJ-629	N69A	0	-0.219	0.013	0.004	0	-0.002	**2.233**	0.01	0.002
	N70A	2.014	0.004	0.011	0.003	0	-0.001	**Axial**	Lateral	Lateral

Calculation 145579-V-CA-005 Model 3 Expansion Joint Schedule										
Tag Number	Node Numbers	X-Dspl (max)	X-Dspl (min)	Y-Dspl (max)	Y-Dspl (min)	Z-Dspl (max)	Z-Dspl (min)	X - Max Total Dspl	Y - Max Total Dspl	Z - Max Total Dspl
EJ-406	N1	0	-0.015	0	0	0.257	-0.011	0.015	0	**0.257**
	N17	0	0	0	0	0	0	Lateral	Lateral	**Axial**
EJ-501	N18	0	0	0	0	0	0	0.017	0.062	**0.695**
	N19	0.017	-0.008	-0.002	-0.062	-0.007	-0.695	Lateral	Lateral	**Axial**

Calculation 145579-V-CA-005 Model 4 Expansion Joint Schedule										
Tag Number	Node Numbers	X-Dspl (max)	X-Dspl (min)	Y-Dspl (max)	Y-Dspl (min)	Z-Dspl (max)	Z-Dspl (min)	X - Max Total Dspl	Y - Max Total Dspl	Z - Max Total Dspl
EJ-630	N132A	0	-0.014	0.004	-0.006	0.006	0	**1.519**	0.119	0.107
	N137	1.505	0	0.016	-0.115	0	-0.101	**Axial**	Lateral	Lateral
EJ-631	N87	0	-0.005	0	0	0.014	0	0.011	0.002	**2.846**
	N88	0	-0.011	0.002	0.001	-0.025	-2.832	Lateral	Lateral	**Axial**
EJ-633	N1	0	0	0	0	0	0	0.025	0.007	**0.274**
	N131	0.005	-0.025	0	-0.007	0	-0.274	Lateral	Lateral	**Axial**

Calculation 145579-V-CA-005 Model 5 Expansion Joint Schedule

Tag Number	Node Numbers	X-Dspl (max)	X-Dspl (min)	Y-Dspl (max)	Y-Dspl (min)	Z-Dspl (max)	Z-Dspl (min)	X - Max Total Dspl	Y - Max Total Dspl	Z - Max Total Dspl
EJ-604	N19	0	-1.185	-0.019	-0.027	0.42	-0.214	**1.185**	0.027	0.42
	N20	0	0	0	0	0	0	**Axial**	Lateral	Lateral
EJ-605	N9	0.067	0	0	-0.095	0.067	0	0.106	**0.149**	0.106
	N10	0	-0.039	0.054	0	0	-0.039	Lateral	**Axial**	Lateral
EJ-606	N16	0	-1.185	-0.019	-0.027	0.214	-0.42	**1.185**	0.027	0.42
	N17	0	0	0	0	0	0	**Axial**	Lateral	Lateral
EJ-607	N4	0.067	0	0	-0.095	0	-0.067	0.106	**0.149**	0.106
	N5	0	-0.039	0.054	0	0.039	0	Lateral	**Axial**	Lateral
EJ-608	N54	0	0	0	0	0	0	0.041	0.179	**0.499**
	N56	0.041	-0.037	0.179	-0.003	0.499	-0.001	Lateral	Lateral	**Axial**
EJ-609	N100	0	0	0	0	0	0	0	0	**0.054**
	N108	0	0	0	0	0.054	0	Lateral	Lateral	**Axial**
EJ-610	N90	0	0	0	0	0	-0.061	0	0	**0.061**
	N96	0	0	0	0	0	0	Lateral	Lateral	**Axial**
EJ-611	N91	0	0	0	0	0	-0.061	0	0	**0.061**
	N97	0	0	0	0	0	0	Lateral	Lateral	**Axial**
EJ-632	N79	0	-0.013	0.016	0	0.099	0	0.048	0.03	**0.349**
	N80	0.035	0	0.03	0	0.349	-0.002	Lateral	Lateral	**Axial**

amec

CALCULATION SHEET

CALC. NO.:	145579-V-CA-005	REV:	1	DATE:	March 26, 2006
CALC. TITLE:	Off-Gas Treatment System Pipe Stress Analysis				
PROJECT NO.:	145579	PROJECT TITLE:	Final DBVS Design		

Attachment 15: RISA 3D Validation and Verification Coversheets

DMJMH+N

VERIFICATION & VALIDATION REVIEW AND APPROVAL FORM

SOFTWARE TITLE	DMJM H+N SOFTWARE ID NO.	DMJM H+N COMPUTER ID NO.
RISA-3D Rapid Interactive Structural Analysis – 3 Dimensional	3D03875	102561

VALIDATION PERFORMED BY (Print Name/Sign): James Van Corbach DATE: Nov. 10, 2004

PURPOSE AND SCOPE OF VALIDATION:

PURPOSE:
The purpose of this verification and validation is to ensure RISA–3D produces reliable data consistent with industry standards.

SCOPE:
The scope of this verification and validation includes static analysis of structures for deflection, stress, thermal loading, and "code check" values on standard steel shapes as well as tapered wide flanges and wooden structures.

REQUIREMENTS FOR SOFTWARE (INPUT RANGE, ETC):
Perform standard checks on structures to determine structural adequacy.

REV.	AFFECTED PAGES	REVISION DESCRIPTION	PREPARER	APPROVED BY	DATE:
0	All	Initial V & V	James Van Corbach	Michael R Curtis	1/17/05

DESCRIPTION OF SOFTWARE/USE:
RISA-3D is a three-dimensional structural analysis modeling package used to reduce the length of time necessary to calculate stresses/forces in structures by hand.

ORIGIN OF SOFTWARE: © 2001 RISA Technologies

REVISION	DOCUMENT NUMBER	TITLE	DATE	
N/A	N/A	RISA-3D Rapid Interactive Structural Analysis – 3 Dimensional Verification Problems	N/A	V&V REFERENCE
5.0d	N/A	RISA-3D Rapid Interactive Structural Analysis – 3 Dimensional Version 5.0d User's Guide	©2004	USER MANUAL

METHOD OF SOFTWARE VALIDATION

A. ☒ COMPARE TO HAND CALCULATIONS
B. ☒ COMPARE TO VALIDATED COMPUTER ANALYSIS RESULTS
C. ☒ OTHER (DESCRIBE): Compare output to that in the V & V reference which compares previous output to both hand calculations and computer analysis results.

METHOD OF HARDWARE VALIDATION

A. ☒ COMPARE TO HAND CALCULATIONS
B. ☒ COMPARE TO VALIDATED COMPUTER ANALYSIS RESULTS
C. ☒ OTHER (DESCRIBE): Compare output to that in the V & V reference which compares previous output to both hand calculations and computer analysis results.

RESULTS: The Verification and Validation of RISA-3D on DMJMH+N computer # 102561 is acceptable.

ATTACHMENTS

Attachment	Name	Sheets
A	RISA-3D Verification Problems	37
B	RISA Technologies Letter	1

Total number of pages of this V&V, including cover sheets and attachments – 86

DMJM technology

VERIFICATION & VALIDATION REVIEW AND APPROVAL FORM

SOFTWARE TITLE	DMJM H+N SOFTWARE ID NO.	DMJM H+N COMPUTER ID NO.
RISA-3D Rapid Interactive Structural Analysis – 3 Dimensional Version 5.0d	3D03875	9WQSP51

VALIDATION PERFORMED BY (Print Name/Sign): Kevin M. Jones Kevin M Jones **DATE: November 18, 2004**

PURPOSE AND SCOPE OF VALIDATION:

PURPOSE:
The purpose of this verification and validation is to ensure RISA–3D produces reliable data consistent with industry standards.

SCOPE:
The scope of this verification and validation includes static analysis of structures for deflection, stress, thermal loading, and "code check" values on standard steel shapes as well as tapered wide flanges and wooden structures.

REQUIREMENTS FOR SOFTWARE (INPUT RANGE, ETC):
Perform standard checks on structures to determine structural adequacy.

REV.	AFFECTED PAGES	REVISION DESCRIPTION	PREPARER	APPROVED BY	DATE:
0	All	Initial V & V	Kevin M. Jones	MICHAEL R. CUSTER Michael R. Custer	11-22-04

DESCRIPTION OF SOFTWARE/USE:
RISA-3D is a three-dimensional structural analysis modeling package used to reduce the length of time necessary to calculate stresses/forces in structures by hand.

ORIGIN OF SOFTWARE: © 2004 RISA Technologies

REVISION	DOCUMENT NUMBER	TITLE	DATE	
N/A	N/A	RISA-3D Rapid Interactive Structural Analysis – 3 Dimensional Verification Problems	N/A	V&V REFERENCE
4.5b	N/A	RISA-3D Rapid Interactive Structural Analysis – 3 Dimensional Version 4.5 User's Guide	©2001	USER MANUAL

METHOD OF SOFTWARE VALIDATION

A. ☒ COMPARE TO HAND CALCULATIONS
B. ☒ COMPARE TO VALIDATED COMPUTER ANALYSIS RESULTS
C. ☒ OTHER (DESCRIBE): Compare output to that in the V & V reference which compares previous output to both hand calculations and computer analysis results.

METHOD OF HARDWARE VALIDATION

A. ☒ COMPARE TO HAND CALCULATIONS
B. ☒ COMPARE TO VALIDATED COMPUTER ANALYSIS RESULTS
C. ☒ OTHER (DESCRIBE): Compare output to that in the V & V reference which compares previous output to both hand calculations and computer analysis results.

RESULTS: The Verification and Validation of RISA-3D on DMJMH+N computer # HK4CH31 is acceptable.

ATTACHMENTS

Attachment	Name	Sheets
A	RISA-3D Verification Problems	37
B	RISA Technologies Letter	1

Total number of pages of this V&V, including cover sheets and attachments – 86

amec

CALCULATION SHEET

CALC. NO.:	145579-V-CA-005	REV:	1	DATE:	March 26, 2006
CALC. TITLE:	Off-Gas Treatment System Pipe Stress Analysis				
PROJECT NO.:	145579	PROJECT TITLE:	Final DBVS Design		

Attachment 16: UBC 1997 Seismic Force Evaluation

DMJM H&N | AECOM

UBC 1997—Evaluation and Application of Seismic Force Components in the Design Analysis of PC-2 Duct and Duct Supports

January 2006

DMJM Technology
2250 Port of Benton Blvd
Richland, WA 99354-1870
Phone: 509 376-1774
Fax: 509 376-5331

The *Demonstration Bulk Vitrification System Specification* (RPP-17403) provides a list of the codes and standards to be applied in the design and analysis of the Demonstration Bulk Vitrification (DBVS) project. The document by direct reference and through another listed reference—*Design Loads for Tank Farm Facilities* [TFC-ENG-STD-06], CH2M HILL Hanford Group, Inc. provides the requirements and design basis information for the structural design and analysis of the DBVS facilities.

Further reference within TFC-ENG-STD-06 (per Section 3.6.5.1) requires earthquake loads applied in the design of PC-2 SSCs to comply with the *1997 Uniform Building Code* (UBC 1997) for Seismic Zone 2B, essential facilities.

The UBC, as indicated in Section 1630.0, "Minimum Design Lateral Forces and Related Effects," describes the general application and requirements for earthquake loads and states in general that the vertical, seismic component may be taken as zero for Allowable Stress Design.

Further review of the UBC reveals in Section 1632 (Eq. 32-2): "Lateral Force on Elements of Structures, Nonstructural components and Equipment Supported by Structures" was determined appropriate for application in establishing the required, seismic forces to be applied in the design of PC-2, ASME AG-1, HVAC systems and support structures. (Information from calculations for the Off-Gas Treatment System Pipe Stress Analysis [i.e., Calculation 145579-V-CA-005] is provided as an example analysis for reference.) In applications, such as those performed in accordance with ASME AG-1, the 1/3 increase in allowable stresses normally permitted under Section 1612.3.3 by the UBC code in the load combinations in Section 1612.3.2 would not be implemented, rather, the load combinations, allowable stresses and deflection limits imposed by ASME AG-1 would be applied in the design, based on the Service Level requirements of the system.

Equation 32-2 from the UBC is evaluated as follows:

F_P = [(ap Ca Ip)/ Rp] [1 + 3 (hx/ hr)] Wp

a_P	=	1.0	(UBC 1997, Table 16-0, Item 3.B, "Electrical, mechanical, and plumbing equipment and associated conduit and ductwork and piping).
Rp	=	3.0	(UBC 1997, Table 16-0, Item 3.B, "Electrical, mechanical, and plumbing equipment and associated conduit and ductwork and piping).
Ca	=	0.24	(Report of Geotechnical Engineering Services, AMEC, Earth & Environmental, Report No. 4-94M-000310-660)
Ip	=	1.5	(UBC 1997, Table 16-K)
hx	=	45.69 ft	(Element or component attachment elevation with respect to grade. Actual dimensional references are from calculation

			145579-V-CA-005 for the Off-Gas Treatment System Pipe Stress Analysis)
hr	=	42.75	(Structure roof elevation with respect to grade. Actual dimensional references are from calculation 145579-V-CA-005 for the Off-Gas Treatment System Pipe Stress Analysis)
Wp			(Weight of element or component)

F_P = 0.50 Wp

Fp not required to be greater than the following:

Fp max = 4.0 Ca Ip Wp (UBC 1997, Eq. 32-3)

Fp max = 1.44 Wp

Fp shall not be less than the following:

Fp min = 0.7 Ca Ip Wp (UBC 1997, Eq. 32-3)

Fp min = 0.25 Wp

Fp = 0.50 Wp would be the total, design lateral seismic force applied in the analysis performed under the UBC code.

The ASCE 7-98 (also a referenced design code in TFC-ENG-STD-06) provides design requirements for analysis of ductwork, as described in Section 9.6.3.10, "HVAC Ductwork." The following equation in Section 9.6.1.3-1 is referenced from Section 9.6.3.10 for determining the seismic forces to be applied in the design of the ductwork and supports. The equation is somewhat similar to that per the UBC, shown as follows:

$F_P = [(0.4\ a_P\ S_{DS})\ I_P / R_p]\ [1 + 2\ (z / h)]\ Wp$

a_P	=	1.0	(ASCE 7-98, Table 9.6.2.2)
Rp	=	2.5	(ASCE 7-98, Table 9.6.2.2)
S_s	=	0.5	(ASCE 7-98, Figure 9.4.1.1)
F_a	=	1.2	(ASCE 7-98, Table 9.4.1.2.4a, Site Class C)
S_{MS}	=	$F_a * S_s = 0.6$	(ASCE 7-98, Equation 9.4.1.2.4-1)
S_{DS}	=	$2/3 * S_{MS} = 0.4$	(ASCE 7-98, Equation 9.4.1.2.5-1)
Ip	=	1.5	(ASCE 7-98, Section 9.6.3.10)

z	=	45.69 ft	(Height in the structure at point of attachment of component. Dimensional references indicated are from calculation 145579-V-CA-005 for the Off-Gas Treatment System Pipe Stress Analysis)
h	=	42.75 ft	(Average roof height of structure relative to grade elevation. Dimensional references are from calculation 145579-V-CA-005 for the Off-Gas Treatment System Pipe Stress Analysis)
Wp			(component operating weight)

F_P = 0.30 Wp

Fp not required to be greater than the following:

Fp max = 1.6 S_{DS} Ip Wp (ASCE 7-98, Eq. 9.6.1.3-1)

Fp max = 0.96 Wp

Fp shall not be less than the following:

Fp min = 0.3 S_{DS} Ip Wp (ASCE 7-98, Eq. 9.6.1.3-2)

Fp min = 0.18 Wp

Fp = 0.30 Wp would be the total design lateral seismic force applied in the analysis performed under the ASCE 7-98 Standard.

Total seismic force, E for application in load combinations per ASCE 7-98, Section 2.4.1 is determined as defined under Section 9.5.2.7, "Combination of Load Effects," as follows:

$E = \rho\, Q_E + 0.2 S_{DS}\, D$ (ASCE 7-98, Eq. 9.5.2.7-1), (D, Effect of Dead Load)

$Q_E = F_P$, $\rho = 1.0$ (ASCE 7-98, Section 9.6.1.3)

The horizontal and vertical components as shown are summed for application in the load combination, however the more appropriate application of these components in the analysis is by vectorial combination of the components by square root of-the-sum of the squares, as follows:

Horizontal Seismic Force Component, $E_H = 0.30$ Wp

Vertical Seismic Force Component, $E_V = 0.08$ D

$E = [(E_H)^2 + (E_V)^2]^{1/2}$

E = 0.31 (Combined SRSS)

The ASCE approach provides a less conservative loading using the SRSS value, as compared to the loading per UBC.

Based on the preceding information and considering that the UBC 1997 is the principal code for determining the earthquake loads for this analysis, sufficient direction and basis is presented to provide a conservative design for the subject ductwork and support system, and application of other referenced codes is not necessary.

References

ASCE 7-98, *Minimum Design Loads for Buildings and Other Structures*, American Society of Civil Engineers, Reston, Virginia.

ASME AG-1, *Code on Nuclear Air and Gas Treatment*, American Society of Mechanical Engineers, New York, New York.

CH2M HILL, 2005, *Demonstration Bulk Vitrification System Specification*, RPP-17403, Revision 3, CH2M HILL Hanford Group, Inc., Richland, Washington.

TFC-ENG-STD-06, *Design Loads for Tank Farm Facilities*, Revision A, CH2M HILL Hanford Group, Inc., Richland, Washington.

UBC, 1997, *1997 Uniform Building Code*, International Conference of Building Officials, Whittier, California.

amec

CALCULATION SHEET

CALC. NO.:	145579-V-CA-005	REV:	1	DATE:	March 26, 2006
CALC. TITLE:	Off-Gas Treatment System Pipe Stress Analysis				
PROJECT NO.:	145579	PROJECT TITLE:	Final DBVS Design		

Attachment 17: ChemMet, LTD Corrosion Evaluation

CHEMMET, LTD., PC
POB 4068
West Richland, WA 99353
(509) 967-2309 or (800) 570-2309 Fax (509) 967-2459

March 24, 2006

Ja-Kael Luey, PE
DMJM Technologies
3250 Port of Benton Blvd
Richland, WA 99354-1670

Dear Mr Luey

Technical Specifications: *Sintered Metal Filter* (143643-V-SP-002, Rev 2), *Exhaust Fans* (145579-V-SP-004, Rev 4), *HEGA Filter Skid* (145579-V-SP-010, Rev 1), *Wet Scrubber Skid Assembly Design and Fabrication* (145579-D-SP-037, Rev 1), *Off-Gas Treatment System Bypass Filter/Fan and Bypass Bleed Skid Assemblies* (145579-V-SP-017, Rev 0) – A Corrosion Review

This document presents a limited number of general remarks about corrosion in the specifications and recommendations. Some remarks pertain to more than one system and are included in this introductory section.

- It is often stated in the documentation that the various 300 series stainless steels may be interchanged at will. Generally, for this system, this is true but it is strongly recommended that the stainless steel off-gas/process lines be 316L unless they remain above the dew-point.
- The off-gas typically contains much more NO_x than SO_x, HCl, or HF and therefore condensate is expected to be rather inert towards stainless steel because it should contain an excess of HNO_3.
- In many specifications, it is stated that stainless steel nuts are required with stainless steel bolts. Unless an anti-galling compound is used, it is worth considering the use of Nitronic 60 for one of the components, probably the nut, to prevent galling.
- If any of the particulates are hygroscopic at a system's operating temperature, there is a possibility of deposits and localized corrosion – no information is available about this.
- No stainless steel component should have carbon steel braces or supports welded directly to it if the interior of the stainless steel is exposed to process fluids.

***Sintered Metal Filter* (143643-V-SP-002, Rev 2)**

- In Table 2-2, where the ASME B&PV code is referenced, mention is made of brazing. Many brazes for stainless steel contain copper or silver. This is absolutely prohibited if there is any opportunity for condensate liquids to be present. These brazes dissolve rapidly in nitric acid!
- Section 3.3.1.11.1: Where 304/304L and 316/316L stainless steels and carbon steel are used in the same system, Positive Material Identification (PMI) is strongly recommended to ensure the wrong alloys are not used during welding.

Exhaust Fans **(145579-V-SP-004, Rev 4)**

- Any of the appropriate comments above apply here also. If condensate forms, there is some possibility of corrosion fatigue, but that does not appear too likely under the given conditions.

HEGA Filter Skid **(145579-V-SP-010, Rev 1)**

- Section 3.3.1.1 – As mentioned in the letter report last year, is there any chance of the NO_x reacting with the carbon to form a fire hazard? If so, what is the maximum temperature attainable? Is there a fire suppression system that could cause water to be present which would lead to the formation of carbon monoxide and hydrogen through the reaction of water with the carbon? This question is raised again because of a fire in a similar operation at Hanford this year.

Wet Scrubber Skid Assembly Design and Fabrication **(145579-D-SP-037, Rev 1)**

- Most of the ducting is resistant to the environment. However, at the entry to quencher, 36-N83-034, condensate conditions are expected to be more corrosive. (Based on Table 3-2 information and also area E7 on drawing F-145579-36-A-0100, Rev L.) Because the temperature there is less than 135 °F, and there is a high NO_x content relative to the HCl, SO_x, and HF, the corrosion is expected to be minimal.

Off-Gas Treatment System Bypass Filter/Fan and Bypass Bleed Skid Assemblies **(145579-V-SP-017, Rev 0)**

- Section 3.2.1.1 – it appears that if the temperature drops from the inlet value, nitric acid could condense. The stainless steel ducting and fans will accommodate this condition.
- Section 3.3.1.3.4 – If the heating coils are exposed to the off-gas, they may suffer some corrosion, particularly under off-normal conditions; the literature does not indicate a major problem but the coils should be monitored..
- Drawing 145579-36-V-0007, Rev G – shows the use of mild steel ducting/pipe after the SCR. If the temperature remains above the dew-point of the off-gas, bare mild steel would be acceptable for the 2-y design life of the system – particularly if it is schedule 10 pipe, or better. With off-normal conditions, it is possible that significant NO_x would be present and additional corrosion should be expected at temperatures below the dew-point. If un-coated pipe is used, the bottom of the line should be checked for corrosion whenever operation below the dew-point is conducted. In accordance with Section 3.3.6, however, coating the interior of the pipe with an acid resistant coating is recommended.
- Miscellaneous mild steel vent lines – some water will condense in the lower sections of the lines and result in corrosion. Corrosion rates will probably be less than about 5-mpy (0.005-inch/y) but definitely less than 10-mpy. Thus for a 2-y design life, a minimum corrosion allowance of about 0.02-inch should be used. The other consideration is that corrosion products will fall into the associated vessels.

Sincerely,

James R. Divine, PhD, PE
NACE Corrosion Specialist, #867
Chief Engineer

JAMES R. DIVINE
STATE OF WASHINGTON
12231
REGISTERED
PROFESSIONAL ENGINEER

EXPIRES: 3-11-08

DMJMH+N CALCULATION DESIGN VERIFICATION CHECKLIST	Task/Project #: A77977	
Calculation Number: 145579-V-CA-005 DBVS OGTS Pipe Stress Analysis	Revision 1	Safety Related N/A
Reviewer/Checker (print name): Douglas M. Chenault Reviewer performed or supervised subject calculation. __X__ NO _____YES Justification Attachment _____, _____ pages Alternate Verification method approved ___N/A___ Method		Date 3/27/2006

ITEM(S) CHECKED Note: Calculation Forms are per *amec*© format.	Accept Y/N	OBJECTIVE EVIDENCE Sheets		INITIAL/ DATE
1. Cover forms properly completed.	Y	1 & 2	of 602	DMC/3/27/06 DMC
2. Calculation Sheet headers complete with calc. no., rev., etc.	Y	1	thru 90	DMC/3/27/06 DMC
3. Calculation Sheet contents complete per format.	Y	3	thru 90	DMC/3/27/06 DMC
4. Listed attachments included.	Y	Att. 1 thru 17	512 pages	DMC/3/27/06 DMC
5. Calculation Objective clearly described.	Y	3	Section 1.1,1.2	DMC/3/27/06 DMC
6 Criteria are suitable and properly referenced to task-specific documents.	Y	4	Section 2.2	DMC/3/27/06 DMC
7. Assumptions and data described and attached or referenced to task documents.	Y	5,6	Section 2.3	DMC/3/27/06 DMC
8. Calculation method identified and appropriate for the design activity.	Y	9, 10	Section 4.0	DMC/3/27/06 DMC
9. Calculation results reasonable and correctly described in Results and Conclusions.	Y	10 thru 18	Section 5.0	DMC/3/27/06 DMC
10. Computer Program identified with version and revision.	Y	9	Section 4.0	DMC/3/27/06 DMC
11. Computer Program references method used, etc.	Y	19	Section 6.0	DMC/3/27/06 DMC
12. Computer input/output provided.	Y	Various pages	Attachment 4 thru 13	DMC/3/27/06 DMC
13. Computer run traceable to calculation.	Y	All pages of Listed Att.	Attachment 4 thru 8	DMC/3/27/06 DMC
14. Computer input data within permissible design input range.	Y	As noted in Section. 6.0 pages 19 to 90	Attachment 4 thru 13	DMC/3/27/06 DMC
15. Computer Program validation/verification addressed.	Y	9	Section 4.0	DMC/3/27/06 DMC

REMARKS:

Douglas M. Chenault

D. M. Chenault
Reviewer/Checker Signature
Printed Name

Date 3-26-06

Subcontractor Calculation Review Checklist
DBVS OGTS Calculations

Subject: Off-Gas Treatment System Pipe Stress Analysis

The subject document has been reviewed by the undersigned.
The checker reviewed and verified the following items as applicable.

Documents Reviewed: 145570-V-CA-005 Rev 1, OGTS Pipe Stress Analysis

Analysis Performed By: AMEC

- Design Input
- Basic Assumptions
- Approach/Design Methodology
- Consistency with item or document supported by the calculation
- Conclusion/Results Interpretation
- Impact on existing requirements
- _____

Checker (printed name, signature, and date)

Tom Mackey T. Mackey 4/24/2006

Organizational Manager (printed name, signature and date)

Mike Sutey 4/24/06

The drawings need to be updated to match the analysis. Calculations are needed for each duct support type. Detailed location of duct supports needs to be shown on the drawings. Update calculations to clearly state that the duct is analyzed to 0.5 Wp. Calculations need to be updated to fully describe duct runs analyzed including isometric sketches.

This page intentionally left blank.

145579-D-CA-061

DMJM H&N | AECOM

CALCULATION COVER SHEET

Date: 03-28-2006

Calculation No: 145579-D-CA-061
Calculation Title: DBVS OGTS Thermal Hydraulics Analysis
Project No. & Title: 145579 - Demonstration Bulk Vitrification System
Design Verification Required: ☒ Yes ☐ No
Calculation Type: ☐ Scoping ☐ Preliminary ☒ Final
☐ Superseded by Calculation No: _____ ☐ Voided

ORIGINAL AND REVISED CALCULATION/ANALYSIS APPROVAL

	Rev. A Printed Name/Signature/Initials/Date	Rev. 0 Printed Name/Signature/Initials/Date	Rev. Printed Name/Signature/Initials/Date
Originator:	John Irwin	John Irwin 3/28/06	
Checked By:	Jack McConwell	Jack McConwell 3-28-06	
Approved By:		Kurt McCracken 3/28/06	
Other:	Kurt McCracken		

AFFECTED DOCUMENTS

Document Number	Document Title	Rev. Number	Responsible Discipline Lead Initials

RECORD OF REVISION

Rev.	Reason for Revision
A	Initial Release
0	Incorporate Comments

ATTACHMENTS

Attachment #	Title	Total Pages
1	DBVS OGTS Drawings	30
2	AFT Arrow Model Input and Output Files	104
3	OGTS Fluid Flow Model Input Data	43
4	Equipment Data Sheets	10
5	ASHRAE Duct Fitting Database Printouts	32

TOTAL CALCULATION PAGE COUNT 238

DMJM H&N | AECOM

Calculation No 145579-D-CA-061	**ORIGINATOR:** John Irwin **DATE:** 03-28-2006
Rev. No. : 0	
Calculation Title : DBVS OGTS Thermal Hydraulics Analysis	**CHECKER:** Jack McConwell **DATE:** 3-28-06

This page intentionally left blank.

Calculation No 145579-D-CA-061	**ORIGINATOR:** John Irwin **DATE:** 03-28-2006
Rev. No. : 0	
Calculation Title : DBVS OGTS Thermal Hydraulics Analysis	**CHECKER:** Jack McConwell **DATE:** 3-28-06

1.0 INTRODUCTION

The Demonstration Bulk Vitrification System (DBVS) will be used to demonstrate the bulk verification process on low activity tank waste. Waste is retrieved by a Single-Shell Tank Waste Retrieval System and then delivered in batches to the DBVS Waste Staging Tanks. The liquid waste is dried and then transferred into a process system including an in-container vitrification station (ICV box). The ICV box is ventilated by an Off Gas Treatment system (OGTS). The purpose of the OGTS is to cool, filter, scrub, and chemically treat the ICV process off-gas, dryer off-gas, dried waste transfer motive air, and storage tank vent streams before the exhaust air fans discharge them through a monitored exhaust stack to atmosphere. Process structures associated with off gas treatment include the wet scrubber skid, the HEPA filter skid, the HEGA filter skid, the selective catalytic reduction skid, medium efficiency air filter, off gas stack and exhaust fans, sodium hydroxide tank, and liquid ammonia storage tank.

1.1 Purpose

This calculation provides a thermal hydraulic assessment of the main OGTS. The OGTS air flow rates, system pressure losses and temperatures will be determined during the expected normal operating conditions identified on the project Process Flow Diagrams (PFDs).

1.2 Scope

The scope of the calculation is limited to the determination of the system flow rates, pressure losses and temperature in the piping and components from the ICV box to the OGTS exhaust stack. This analysis will determine the fan/system operating point; assess the operating pressure in the ICV box (ensuring a negative pressure is maintained in the ICV Box) and predict the temperature of the piping from the ICV box to the OGTS exhaust stack for normal flow conditions as specified in the PFDs.

The following four fan cases have been analyzed in this calculation:

1. Isothermal case at 70 °F with all filters at their initial differential pressures (i.e., clean dPs).
2. Heat transfer case with an ICV Box outlet temperature at 875 °F, an ambient temperature of 115 °F and with all filters at their initial differential pressures (i.e. clean dPs).

Calculation No 145579-D-CA-061	**ORIGINATOR:** John Irwin **DATE:** 03-28-2006
Rev. No.: 0	
Calculation Title : DBVS OGTS Thermal Hydraulics Analysis	**CHECKER:** Jack McConwell **DATE:** 3-28-06

3. Heat transfer case with an ICV Box outlet temperature at 875 °F, an ambient temperature of 115 °F and with all filters at their change out points (i.e. max. dPs).
4. Heat transfer case with an ICV Box outlet temperature at 875 °F, an ambient temperature of 115 °F and with all filters at their change out points (i.e. max. dPs), with a backdraft damper, a fan speed adjustment to achieve the system design point.

2.0 Basis

2.1 Design Inputs

1. Component and pipe lengths are derived from the project drawings listed in the reference section and contained in Attachment 1 of this report. The main OGTS ducting is schedule 10S (8 inch and larger) and schedule 40S (6 inch and smaller), stainless steel pipe, A312 type 316L and schedule 10 carbon steel pipe from the SCR to the exhaust fans with surface roughness as specified in Crane 1988.

2. The maximum ambient temperature 115°F, HNF-SD-GN-ER-501.

3. All isolation and control valves were assumed to be Keystone butterfly valves, with the Cv flow parameter as provided by the manufacturer (See Attachment 4) for each size of valve and its relative open position percentage. The main fan backdraft damper was specified as a Ruskin damper with pressure drop characteristics as provided by the manufacturer (Attachment 4).

4. The HEPA and medium efficiency filters were assumed to be Flanders filters with pressure drops provided by the manufacturer for similar applications (See Attachment 4). Clean and dirty filter pressure drops were utilized for the various parametric models.

5. The fan characteristics were as provided by the manufacturer for a Robinson Company Model RB1806-5 fan (See Attachment 4).

6. The flow loss coefficients for the standard piping components of the system were determined using the ASHRAE duct fitting database. The ASHRAE duct fitting database was utilized to calculate these loss coefficients for standard fittings, including elbows, transitions and miscellaneous fittings. The ASHRAE duct fitting loss coefficients table from the 2005 ASHRAE Fundamentals are in Attachment 5.

Calculation No 145579-D-CA-061	**ORIGINATOR:** John Irwin **DATE:** 03-28-2006
Rev. No. : 0	
Calculation Title : DBVS OGTS Thermal Hydraulics Analysis	**CHECKER:** Jack McConwell **DATE:** 3-28-06

7. The site elevation at the 200W area location for the DBVS of 662 feet was utilized to determine the local atmospheric pressure of 14.3 psia (average).

8. A main input to the flow model was the heat transfer boundary conditions. The AFT Arrow model requires an input for the external heat transfer coefficient for the pipe system being analyzed. The external heat transfer coefficients were calculated from standard correlations found in the Holman, 1990. The simplified McAdams air correlations, found in Holman, for natural convection from a horizontal cylinder was used. In addition, heat transfer by thermal radiation from the pipe external surface was accounted for by using methods defined by Holman, 1990. A combined convection and thermal radiation heat transfer coefficient was an input parameter for the AFT Arrow flow model. The calculation of the external heat transfer coefficient is contained in Attachment 3.

9. The pipe internal convection coefficient was calculated by AFT Arrow using the standard Dittus-Boelter convection correlation for forced flow. The thermal properties of stainless steel were provided for by the AFT Arrow database to calculate the conductive heat transfer through the pipe wall.

10. The ICV box and the OGTS system components were given an arbitrary elevation of 0 feet relative to the project site elevation. Elevation changes and thus resulting air density changes have third order effects on the results of the analysis, and therefore were neglected.

11. The process conditions for the ICV box and the major components are as defined on the DBVS PFDs, F-145579-00-A-0021, F-145579-00-A-0022 and F-145579-00-A-0023. These conditions are listed in Table 1.

12. A nominal air flow of approximately 24,000 lbm per hour was specified for the OGTS system as stipulated in the project PFDs.

13. For the condition where flow from the ICV box is through the main OGTS system, mass flows through various air inlet bleed paths per the PFDs were utilized in the flow model. The mass flows from the PFDs are identified in Table 1.

DMJM H&N | AECOM

Calculation No 145579-D-CA-061	**ORIGINATOR:** John Irwin **DATE:** 03-28-2006
Rev. No. : 0	
Calculation Title : DBVS OGTS Thermal Hydraulics Analysis	**CHECKER:** Jack McConwell **DATE:** 3-28-06

Table 1. OGTS Design Basis Conditions as Defined in the Project PFDs.

Component	Current PFD Stream no.	Current Stream Condition (PFD Rev. 0H/0J)
ICV Air Inlet Filter	NA	NA
ICV Box Gas Generation	NA	NA
ICV Box Outlet	13	406 acfm at -2.46" w.g., 875 °F, 743 lb/hr
AWTE Air Inlet Filter	9	115 acfm at -2.24" w.g., 77 °F, 506 lb/hr
AWTE Outlet	13A	115 acfm at -2.57" w.g., 77 °F, 506 lb/hr
SMF Inlet Air Filter (Alternate Air)	14	536 acfm at -2.46" w.g. 77 °F, 2349 lb/hr (Note: not operating during melt)
SMF Inlet	15	536 acfm at -2.6" w.g., 572 °F max, 1248 lb/hr
SMF Outlet	17	549 acfm at -12.6" w.g., 572 °F max, 1241 lb/hr
WSS Inlet Air Filter	16	1973 acfm at -12.6" w.g., 77 °F and 8320 lb/hr (This accounts for the Vacuum Blower and WRT vent flows)
Dried Waste Feed Vacuum Pump	16	600 acfm of air at 1 atm, 77 °F and 2682 lb/hr
WRS Staging Tank Vent Stream	16	30 acfm at -12.6" w.g. and 77 °F, 132.5 lb/hr
WSS Combined Inlet	19	3115 acfm at -13.6" w.g. and 134 °F, 12,375 lb/hr
WSS Condenser Intermittent Air Inlet Filter	7C	198 acfm at -80.1" w.g. 77 °F, 874 lb/hr
Sec. Waste Storage Tank Vents & WSS tank Vent	NA	50 acfm at -80.1" w.g., 77 °F, 224 lb/hr
Combined Vent Flow into WSS Condenser	7B	198 acfm at -80.1" w.g. 77 °F, 874 lb/hr
WSS Heater Outlet/HEPA Inlet	31	4560 acfm at -85.1" w.g. and 167 °F, 13,468 lb/hr
HEGA Inlet	32	4642 acfm at -90.8" w.g. and 167 °F, 13,468 lb/hr
SCR Dilution Air Filter	39	3181 acfm at -96.2" w.g. and 77 °F, 10,723 lb/hr

Calculation No 145579-D-CA-061	**ORIGINATOR:** John Irwin **DATE:** 03-28-2006
Rev. No. : 0	
Calculation Title : DBVS OGTS Thermal Hydraulics Analysis	**CHECKER:** Jack McConwell **DATE:** 3-28-06

Component	Current PFD Stream no.	Current Stream Condition (PFD Rev. 0H/0J)
SCR Combined Inlet	40	7692 acfm at -96.2" w.g. and 128 °F, 24,191 lb/hr
Main Fan Inlet	45	10255 acfm at -117.6" w.g., 248 °F (SCR Outlet at 272 °F from Vendor Submittal), 24,224 lb/hr.
Main Fan Outlet	46	8455 acfm at 0.6" w.g., 372 °F, 24,224 lb/hr.
Bypass Flow into the Stack	NA	763 scfm at 0.0" w.g., 165 °F, 3429 lb/hr (Per Calculation 145579-D-CA-056)
Combined Stack Flow	NA	6855 scfm at 0.6" w.g., 320 °F, 27, 653 lb/hr

2.2 Assumptions

1. The process fluid was assumed to be dry air with temperature dependent properties that are accounted for by the fluid flow modeling software database of properties, including non-ideal gas behavior. The primary physical parameter used in the analysis is the viscosity of the fluid. The difference in viscosity of dry air and 100% relative humidity air is negligible (VDI Guideline 4670).

2. Worst case ambient conditions were assumed for conservative prediction of the heat loss from the ductwork/piping. An ambient temperature of 115 °F with no wind was assumed for all external heat transfer effects.

3. The thermal emissivity of 0.6 was assumed for the stainless steel piping, no piping insulation was assumed. The emissivity value chosen is conservative with respect to "as received" or oxidized stainless steel piping typically used in construction (Irwin 2000) Stainless steel will have an emissivity typically in the range of 0.6 to 0.8 while carbon steel will be 0.8 to 0.9. The higher the emissivity the cooler the gas stream will become in the OGTS application. Therefore; stainless steel bounds carbon steel. Stainless steel has about ½ the thermal conductivity of carbon steel; in the OGTS application this too will bound the temperatures in the ductwork.

Calculation No 145579-D-CA-061	**ORIGINATOR:** John Irwin **DATE:** 03-28-2006
Rev. No. : 0	
Calculation Title : DBVS OGTS Thermal Hydraulics Analysis	**CHECKER:** Jack McConwell **DATE:** 3-28-06

4. The HEPA filter pressure drops for dirty filters was assumed to be twice the value of clean filters, for example, the main HEPA filter element has a clean filter pressure drop of 1 inch w.c,, the dirty filter pressure drop was assumed to be 2 inches w.c. for each element or a total of 4 inches w.c. for the HEPA assembly.

5. The various air inlets were assumed to have 60% open screen with rectangular right angle rain caps or 45° elbows. The flow loss of these components was modeled using data from ASHRAE 2005 (Attachment 5).

6. The WRS and secondary waste tank vents and the Dryer Vacuum pump have minimal mass flows and therefore were neglected in this analysis.

7. A nominal fan efficiency of 67 percent was assumed based upon engineering judgment.

3.0 References (Update Drawing Rev. Letters)

1. AFT Arrow Compressible Pipe Flow Modeling, Users Guide, Version 3.0, Applied Flow Technology, 2005.

2. ASHRAE Fundamentals, 2005, American Society of Heating, Refrigerating and Air conditioning Engineers, Inc. Atlanta, GA.

3. Crane, Flow of Fluids Through Valves, Fittings, and Pipe, Technical Paper No. 410, 1988, Crane.

4. DBVS Drawing F-145579-00-A-0021, Rev 0J, "Full DBVS Feed Preparation & Melt Process Flow Diagram".

5. DBVS Drawing F-145579-00-A-0022, Rev 0H, "Full DBVS Trailer Off-Gas Treatment Process Flow Diagram".

6. DBVS Drawing F-145579-00-A-0023, Rev 0H, "Full DBVS Tri-Mer and SCR Process Flow Diagram".

7. DBVS Drawing F-145579-32-A-0101, Rev. OJ, "Bulk Vitrification Liquid Waste Staging Tanks P&ID."

8. DBVS Drawing F-145579-33-A-0101, Rev. R, "Bulk Vitrification Waste Dryer Vacuum P&ID."

Calculation No 145579-D-CA-061	**ORIGINATOR:** John Irwin **DATE:** 03-28-2006
Rev. No. : 0	
Calculation Title : DBVS OGTS Thermal Hydraulics Analysis	**CHECKER:** Jack McConwell **DATE:** 3-28-06

9. DBVS Drawing F-145579-33-A-0106, Rev. H, "Bulk Vitrification Waste Feed Dryer to Box P&ID."

10. DBVS Drawing F-145579-34-A-0101, Rev. K, "Bulk Vitrification AWTE Hood & Waste Feed P&ID."

11. DBVS Drawing F-145579-35-A-0100, Rev. P, "Bulk Vitrification ICV Box P&ID."

12. DBVS Drawing F-145579-36-A-0099, Rev. M, "Bulk Vitrification Off-Gas Dust Removal P&ID."

13. DBVS Drawing F-145579-36-A-0100, Rev. N, "Bulk Vitrification Wet Scrubber Skid No. 1 P&ID."

14. DBVS Drawing F-145579-36-A-0102, Rev. P, "Bulk Vitrification Off-Gas Trailer Scrubber Filter P&ID."

15. DBVS Drawing F-145579-36-A-0103, Rev. M, "Bulk Vitrification Selective Catalytic Reduction P&ID."

16. DBVS Drawing F-145579-36-A-0105, Rev. N, "Bulk Vitrification Stack Monitoring P&ID."

17. DBVS Drawing F-145579-36-A-0107, Rev. H, "Bulk Vitrification Off-Gas HEPA Filter P&ID."

18. DBVS Drawing F-145579-37-A-0101, Rev. 0F, "Bulk Vitrification Secondary Waste Storage P&ID."

19. DBVS Drawing F-145579-36-V-0003, Rev. K, "Bulk Vitrification Off-Gas Treatment Melt & Dryer Lower Plan."

20. DBVS Drawing F-145579-36-V-0004, Rev. J, "Bulk Vitrification Off-Gas Treatment Melt & Dryer Middle Plan."

21. DBVS Drawing F-145579-36-V-0005, Rev. H, "Bulk Vitrification Off-Gas Treatment Melt & Dryer Upper Plan."

Calculation No 145579-D-CA-061	**ORIGINATOR:** John Irwin **DATE:** 03-28-2006
Rev. No. : 0	
Calculation Title : DBVS OGTS Thermal Hydraulics Analysis	**CHECKER:** Jack McConwell **DATE:** 3-28-06

22. DBVS Drawing F-145579-36-V-0006, Rev. H, "Bulk Vitrification Off-Gas Treatment Wet Scrubber Skid Plan."

23. DBVS Drawing F-145579-36-V-0007, Rev. H, "Bulk Vitrification Off-Gas Treatment Scrub & Stack Plan."

24. DBVS Drawing F-145579-36-V-0021, Rev. F, "Bulk Vitrification Off-Gas Exhaust Stack Details."

25. DBVS Drawing F-145579-36-V-0027, Rev. H, "Bulk Vitrification Off-Gas Treatment Melt & Dryer Sections 'A' & 'B'."

26. DBVS Drawing F-145579-36-V-0028, Rev. K, "Bulk Vitrification Off-Gas Treatment Melt & Dryer Section 'C'."

27. DBVS Drawing F-145579-36-V-0029, Rev. J, "Bulk Vitrification Off-Gas Treatment Melt & Dryer Section 'D'."

28. DBVS Drawing F-145579-36-V-0030, Rev. J, "Bulk Vitrification Off-Gas Treatment Melt & Dryer Section 'E'."

29. DBVS Drawing F-145579-36-V-0031, Rev. G, "Bulk Vitrification Off-Gas Treatment Wet Scrubber Skid Sections."

30. DBVS Drawing F-145579-36-V-0033, Rev. H, "Bulk Vitrification Off-Gas Treatment Scrub & Stack Section."

31. DBVS Drawing F-145579-36-V-0034, Rev. H, "Bulk Vitrification Off-Gas Treatment Scrub & Stack Sections."

32. DBVS Specification 145579-V-SP-001, Rev. 2, "Specification for Selective Catalytic Reduction Unit (SCR)."

33. DBVS Specification 145579-V-SP-002, Rev. 2, "Sintered Metal Filters."

34. DBVS Calculation CAL-WSS-006, Rev. 1, "Demonstration Bulk Vitrification System Wet Scrubber Skid Calculation for Off-Gas Differential Pressure," Duratek.

35. Flanders Doc. PB20011-1099, "In-Place Test Housings", pg 3.

Calculation No 145579-D-CA-061	**ORIGINATOR:** John Irwin **DATE:** 03-28-2006
Rev. No. : 0	
Calculation Title : DBVS OGTS Thermal Hydraulics Analysis	**CHECKER:** Jack McConwell **DATE:** 3-28-06

36. Flanders Doc. PB2016-0900, "Nuclear Grade HEPA Filters", pg 7.

37. Flanders Doc. PB-2003-1103, "HEGA Filters", pg 10.

38. Flanders Doc. PB-1002-1103, "Precision Cell", pg 4.

39. HNF-SD-GN-ER-501, Natural Phenomena Hazards Hanford Site Washington, Rev. 1B, Fluor Hanford.

40. Holman, J. P., Heat Transfer, 1990, McGraw Hill.

41. Idelchik, I. E., Handbook of Hydraulic Resistance, 1996, Begell House Publishing.

42. Irwin, J.J., Thermal Analysis Methods for Safety Analysis Reports for Packaging, WHC-SD-TP-RPT-005, Rev. 1, 2000, Fluor Hanford Inc.

43. VDI Guideline 4670, Thermodynamic Properties of Humid Air and Combustion Gases, 2003, Verein Deutscher Ingenieure, Association of German Mechanical Engineers.

4.0 Methods

The OGTS thermal-hydraulic calculations are performed using AFT Arrow Version 3.0, with inputs provided from the MS Excel spreadsheets (Attachment 3), manufacturer's data (Attachment 4) and selected ASHRAE duct fitting printouts from ASHRAE 2005 (Attachment 5).

The AFT Arrow program was utilized for analyzing the one-dimensional compressible flow in the OGTS piping network. Temperature dependent thermo-physical properties of prescribed fluids are accounted for in the AFT Arrow program's database. Non-ideal gas effects can be accounted for in AFT Arrow by the use of a suitable thermodynamic equation of state. AFT Arrow utilizes the Redlich-Kwong equation of state to account for compressibility effects. The AFT Arrow program only models steady state conditions.

The cases analyzed by the AFT Arrow model are listed in Table 2 for the selected fan case. The major consideration is the operating pressure drops of the clean and dirty filters and the operating conditions of the various components in the OGTS. Clean filter pressure drops are as specified by the filter vendor per data in Attachment 4. The dirty

Calculation No 145579-D-CA-061	**ORIGINATOR:** John Irwin **DATE:** 03-28-2006
Rev. No. : 0	
Calculation Title : DBVS OGTS Thermal Hydraulics Analysis	**CHECKER:** Jack McConwell **DATE:** 3-28-06

filter pressure drops are based upon past Hanford experience at twice the as received filter pressure drop.

The operating conditions of the OGTS components, sintered metal filters, wet scrubber system, HEPA and HEGA skid and the selective catalytic reduction system were as specified in the respective Technical Specifications for these components. Flow loss coefficients were added to the pipe or component loss model within the AFT Arrow model for each pipe segment and component as required by the physical layout.

Table 2. OGTS System Selected Fan Cases

Case No.	Operating Points	ICV Outlet Temperature °F	Ambient Temperature °F	Filter Condition	Component Conditions
1	Per PFD	70	70	All Clean	Per Tech Spec.
2	Per PFD	875	115	All Clean	Per Tech Spec.
3	Per PFD	875	115	All at change out condition	Per Tech Spec.
4	Per PFD	875	115	All at change out condition	Per Tech Spec.

Notes: 1) Case 1 through 3 utilized dual butterfly isolation valves at the main fan exit.
2) Case 4 utilized a single butterfly valve a Backdraft damper at the main fan exit.

The initial case was for isothermal flow through the ICV Box and the main OGTS components with all inlet bleed filters, SMF, HEPA and HEGA filters having their clean pressure drops. The ambient and fluid temperature was maintained at 70°F to simulate a cold startup condition.

The second and third cases introduced the operating temperature of the major components as defined by the project PFDs. In addition, heat rejection from the external surfaces of the ductwork was modeled. Both natural convection and thermal radiation heat transfer effects were modeled. A maximum ambient temperature of 115 °F was utilized for conservatism. The difference between case 2 and case 3 involved the condition of the HEPA and medium efficient filters in the OGTS. For case 2, all filters were assumed to be in the as received or "Clean" condition. For case 3, all filters were assumed to be in the change out or "Dirty" condition.

Calculation No 145579-D-CA-061	**ORIGINATOR:** John Irwin **DATE:** 03-28-2006
Rev. No. : 0	
Calculation Title : DBVS OGTS Thermal Hydraulics Analysis	**CHECKER:** Jack McConwell **DATE:** 3-28-06

Case 4 is the same as case 3 except one main fan isolation valve was replaced with a high pressure drop Backdraft damper.

In all cases the inlet bleed filter flows at the wet scrubber and SCR were set to achieve a mass flow as prescribed by the PFD, 8323 lb/ hr for the wet scrubber inlet filter and 10,732 lb/hr for the SCR air dilution filter. This was achieved by modeling the isolation valve at the respective filter inlet stream as a fixed mass flow control valve.

AFT Arrow has been previously verified and validated on computer #DMJMH+N 102514. The ASHRAE duct fitting flow loss coefficients were derived from data in the ASHRAE Fundamentals handbook (ASHRAE 2005). MS Excel is a general purpose spreadsheet program.

5.0 Results and Conclusions

The AFT flow model results are categorized by the basic assumptions of the operating conditions of the components in the system and the assumption on the operating temperature, nominal cold startup condition or the hot operating condition. The HEPA and medium efficiency filters are defined by the condition of "clean", i.e. the manufacturer's stated pressure drop for new filter elements, or "dirty", the maximum expected pressure drop during operation.

5.1 Results for the Selected Fan Cases

For a nominal flow of 24,000 lb/hr (10,000 acfm) at the fan and an with 875 °F ICV outlet temperature, a fan was selected to achieve this flow rate with a static head capability of approximately 120 inches w.c. A Robinson fan, model number RB1806-5, was determined to be acceptable for this application. An evaluation of the selected fan was performed. The following results, Table 3, were determined by the AFT Arrow flow model.

Table 3. Fan Summary (Fan Curve @ 3550 RPM)

Case No.	Mass Flow, lb/hr	Vol. Flow, acfm	Static dP, inches w.c.	Power, hp
1	25,853	9,502	151.2	279.6
2	23,977	10,686	121.9	264.9
3	23,686	10,563	122.1	262.4
4	24,224	12,038	152.8	358.0

Calculation No 145579-D-CA-061	**ORIGINATOR:** John Irwin **DATE:** 03-28-2006
Rev. No. : 0	
Calculation Title : DBVS OGTS Thermal Hydraulics Analysis	**CHECKER:** Jack McConwell **DATE:** 3-28-06

For case 4, the fan speed (rpm) had to be increased by 18% to achieve a solution.

Tables 4 through 7 depict the system results for various components with in the OGTS.

Calculation No 145579-D-CA-061	**ORIGINATOR:** John Irwin **DATE:** 03-28-2006
Rev. No. : 0	
Calculation Title : DBVS OGTS Thermal Hydraulics Analysis	**CHECKER:** Jack McConwell **DATE:** 3-28-06

Table 4. Case 1 (70 °F Ambient, No Heat Transfer Effects, Fan Curve @ 3550 RPM, Clean Filters)

Component	Mass flow rate, lb/hr	Pressure drop, inches w.c.	Pressure, inches w.g.	Temperature, °F
ICV Air Inlet Filter	2,443	1.2	-2.1	70
ICV Box	2,443	3.7	-12.8	70
AWTE Air Inlet Filter	1,675	2.2	-5.4	70
SMF N02-019	4,117	3.2	-24.8	70
SMF N02-020	4,117	3.3	-33.5	70
WSS Inlet Air Filter	8,320	2.1	-2.0	70
Waste Feed Vacuum Pump	2,682	NA	NA	70
WSS Packed Column	15,144	5.8	-42.8	70
WSS Venturi	15,144	53.6	-72.6	70
WSS Condenser	15,144	10.1	-104.6	70
WSS Heater	15,144	4.0	-111.7	70
HEPA	15,144	4.6	-117.4	70
HEGA	15,144	4.2	-121.8	70
SCR Dilution Air Filter	10,723	0.4	-0.9	70
SCR	25,853	22.5	-136.6	70
Main Fan Inlet	25,853	NA	-148.8	70
Main Fan Outlet	25,853	NA	+1.7	183
Exhaust Stack	25,853	0.02	+0.2	183

Table 5. Case 2 (115° F Ambient, Heat Transfer Effects, Fan Curve @ 3550 RPM, Clean Filters)

Component	Mass flow rate, lb/hr	Pressure drop, inches w.c.	Pressure, inches w.g.	Temperature, °F
ICV Air Inlet Filter	1286.1	0.72	-0.4	115
ICV Box	1286.1	1.1	-4.25	875
AWTE Air Inlet Filter	966	1.4	-2.26	115
SMF N02-019	2,252	2.8	-10.65	432.8
SMF N02-020	2,252	2.7	-16.01	385.2

DMJM H&N | AECOM

Calculation No 145579-D-CA-061	**ORIGINATOR:** John Irwin **DATE:** 03-28-2006
Rev. No. : 0	
Calculation Title : DBVS OGTS Thermal Hydraulics Analysis	**CHECKER:** Jack McConwell **DATE:** 3-28-06

Table 5. Case 2 (115°F Ambient, Heat Transfer Effects, Fan Curve @ 3550 RPM, Clean Filters)

Component	Mass flow rate, lb/hr	Pressure drop, inches w.c.	Pressure, inches w.g.	Temperature, °F
WSS Inlet Air Filter	8,320	2.3	-2.15	115
Waste Feed Vacuum Pump	2,682	NA	NA	115
WSS Packed Column	13,254	5.2	-22.0	147
WSS Venturi	13,254	48.2	-49.2	147
WSS Condenser	13,254	9.3	-78.2	147
WSS Heater	13,254	3.4	-84.5	169
HEPA	13,254	4.3	-89.5	168
HEGA	13,254	4.0	-93.8	168
SCR Dilution Air Filter	10,723	0.47	-1.0	115
SCR	23,977	21.5	-107.5	272
Main Fan Inlet	23,977	NA	-119.4	256
Main Fan Outlet	23,977	NA	+1.9	374
Exhaust Stack	23,977	.025	+.02	343

Table 6. Case 3 (115°F Ambient, Heat Transfer Effects, Fan Curve @ 3550 RPM, Dirty Filters)

Component	Mass flow rate, lb/hr	Pressure drop, inches w.c.	Pressure, inches w.g.	Temperature, °F
ICV Air Inlet Filter	1,150	1.3	-1.0	115
ICV Box	1,150	0.9	-4.1	875
AWTE Air Inlet Filter	810	2.3	-2.3	115
SMF N02-019	1,961	4.9	-10.4	434
SMF N02-020	1,961	4.7	-17.2	382
WSS Inlet Air Filter	8,320	4.6	-3.3	115
Waste Feed Vacuum Pump	2,682	NA	NA	115
WSS Packed Column	12,963	5.0	-24.0	142
WSS Venturi	12,963	45.8	-49.5	142
WSS Condenser	12,963	9.0	-77.0	142
WSS Heater	12,963	3.2	-83.1	167
HEPA	12,963	6.5	-89.1	166

Calculation No 145579-D-CA-061	**ORIGINATOR:** John Irwin **DATE:** 03-28-2006
Rev. No.: 0	
Calculation Title: DBVS OGTS Thermal Hydraulics Analysis	**CHECKER:** Jack McConwell **DATE:** 3-28-06

Table 6. Case 3 (115°F Ambient, Heat Transfer Effects, Fan Curve @ 3550 RPM, Dirty Filters)

Component	Mass flow rate, lb/hr	Pressure drop, inches w.c.	Pressure, inches w.g.	Temperature, °F
HEGA	12,963	4.0	-94.4	166
SCR Dilution Air Filter	10,723	0.9	-1.25	115
SCR	23,686	21.2	-108.0	272
Main Fan Inlet	23,686	NA	-119.7	259
Main Fan Outlet	23,686	NA	1.85	373
Exhaust Stack	23,686	0.025	.02	372

Table 7. Case 4 (115°F Ambient, Heat Transfer Effects, Dirty Filters, Backdraft Damper)

Component	Mass flow rate, lb/hr	Pressure drop, inches w.c.	Pressure, inches w.g.	Temperature, °F
ICV Air Inlet Filter	1,450	1.6	-1.6	115
ICV Box	1,450	1.4	-6.8	875
AWTE Air Inlet Filter	1,049	0.7	-3.8	115
SMF N02-019	2,499	6.5	-16.1	446
SMF N02-020	2,499	6.3	-25.8	399
WSS Inlet Air Filter	8,320	4.6	-3.65	115
Waste Feed Vacuum Pump	2,682	NA	NA	115
WSS Packed Column	13,350	5.9	-34.7	153
WSS Venturi	13,350	54.5	-65.1	153
WSS Condenser	13,350	10.1	-97.6	153
WSS Heater	13,350	4.1	-104.8	177
HEPA	13,350	7.4	-111.9	176
HEGA	13,350	4.6	-118.0	176
SCR Dilution Air Filter	10,723	0.9	-1.64	115
SCR	24,224	23.8	-133.3	278
Main Fan Inlet	24,224	NA	-147.0	264
Main Fan Outlet	24,224	NA	+5.5	417
Exhaust Stack	24,224	0.03	+.01	416

DMJM H&N | AECOM

Calculation No 145579-D-CA-061	**ORIGINATOR:** John Irwin **DATE:** 03-28-2006
Rev. No.: 0	
Calculation Title: DBVS OGTS Thermal Hydraulics Analysis	**CHECKER:** Jack McConwell **DATE:** 3-28-06

5.2 Conclusions for the Specified Fan Case

The selected fan, Robinson model number RB1806-5 (Attachment 4), will be able to achieve the required flow rates through and pressure in the OGTS system as detailed in Cases 1 through 3. For case 4, the fan speed has to be increased by approximately 18% to achieve the required flow rate at the total system pressure drop.

J.J.I. 4/18/06

The expected temperatures at the OGTS SMFs are less than 572 °F, the HEPA and HEGA filters temperature are less than ~~250~~ 180 °F and therefore acceptable. The outlet temperature of the fan for the hot operation case was calculated to be 374 °F (for case 2 and 3), which is nominally the same as specified in the PFDs.

4/18/06

4/18/06

The negative pressure (relative to local atmosphere) within the ICV box is excessive during cold startup at -12 inches w.c. but acceptable during normal hot operation. Utilization of a variable frequency drive or a flow control valve at the ICV box inlet or outlet are two possible solutions to limit the amount of vacuum in the ICV box during cold startup. A variable frequency drive will be required on the fan if it is to achieve the required fan speed for the conditions of Case 4.

6.0 Calculations and Analyses

The AFT Arrow model is shown in the Figure 6-1 below.

The drawings used to develop the AFT physical model are contained in Attachment 1. The AFT Arrow Input and Output Files for the various cases analyzed are in Attachment 2. Attachment 3 contains the flow coefficient and physical configuration input data for the AFT Arrow thermal hydraulic model. Attachment 4 contains the manufacturer's data for the butterfly valves, Backdraft damper, HEPA filters and fans that may be used in the OGTS system.

The dashed lines depicted in the figure below signify that those ductwork or components were isolated in the flow model. This was done to simulate the normal flow conditions as specified in the project PFDs or to isolate negligible flows into the overall system (note: this was done to simplify the modeling effort).

Calculation No 145579-D-CA-061	**ORIGINATOR:** John Irwin **DATE:** 03-28-2006
Rev. No. : 0	**CHECKER:** Jack McConwell **DATE:** 3-28-06
Calculation Title : DBVS OGTS Thermal Hydraulics Analysis	

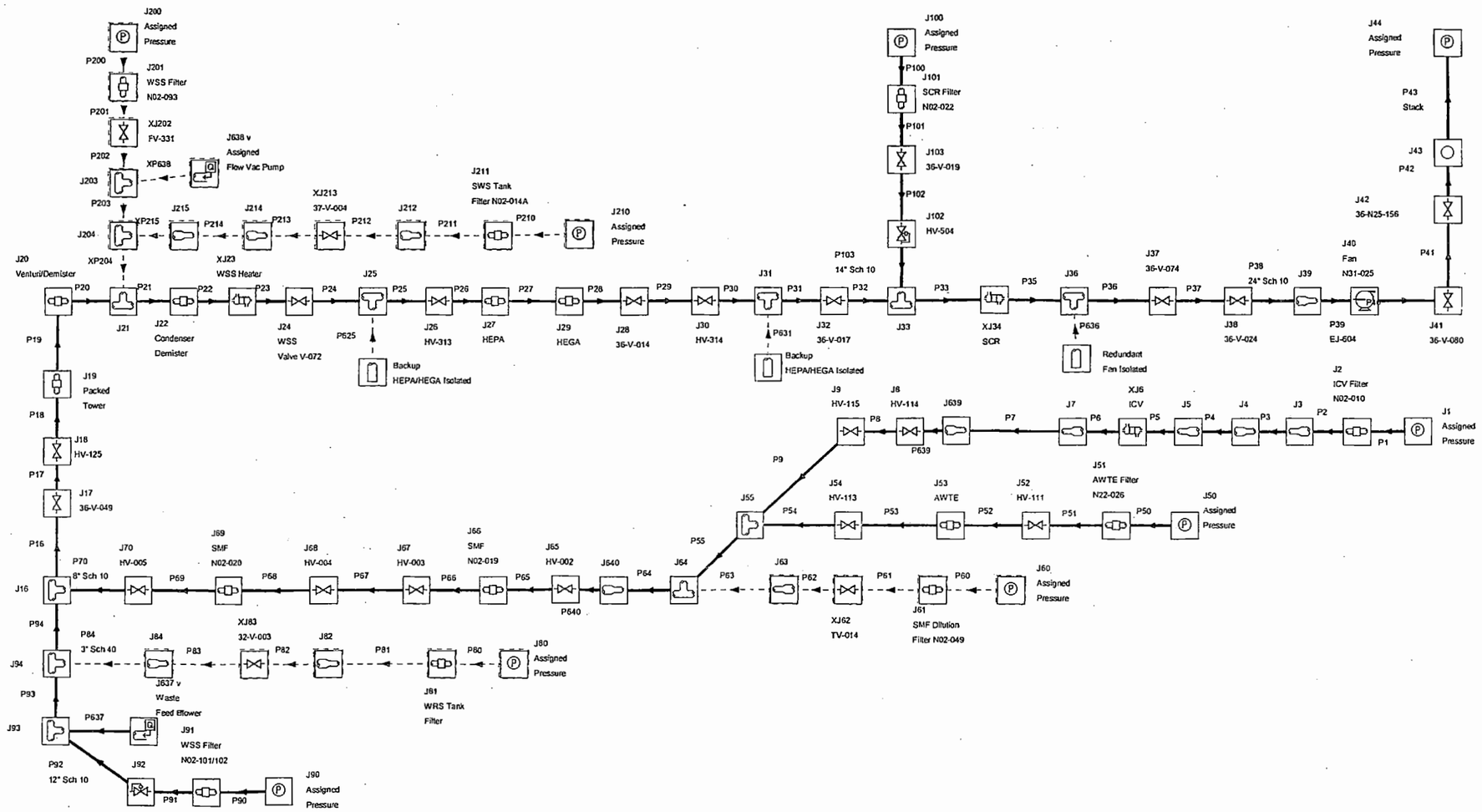

Figure 6-1. AFT Arrow Thermal Hydraulic Model of the DBVS Offgas System.

DMJM H&N | AECOM

Attachment 1

Calculation No. 145579-D-CA-061	**ORIGINATOR:** John Irwin **DATE:** 03-28-2006
Rev. No. : 0	
Calculation Title: DBVS OGTS Thermal Hydraulics Analysis	**CHECKER:** Jack McConwell **DATE:** 3-28-2006

DBVS OGTS Drawings

This page intentionally left blank.

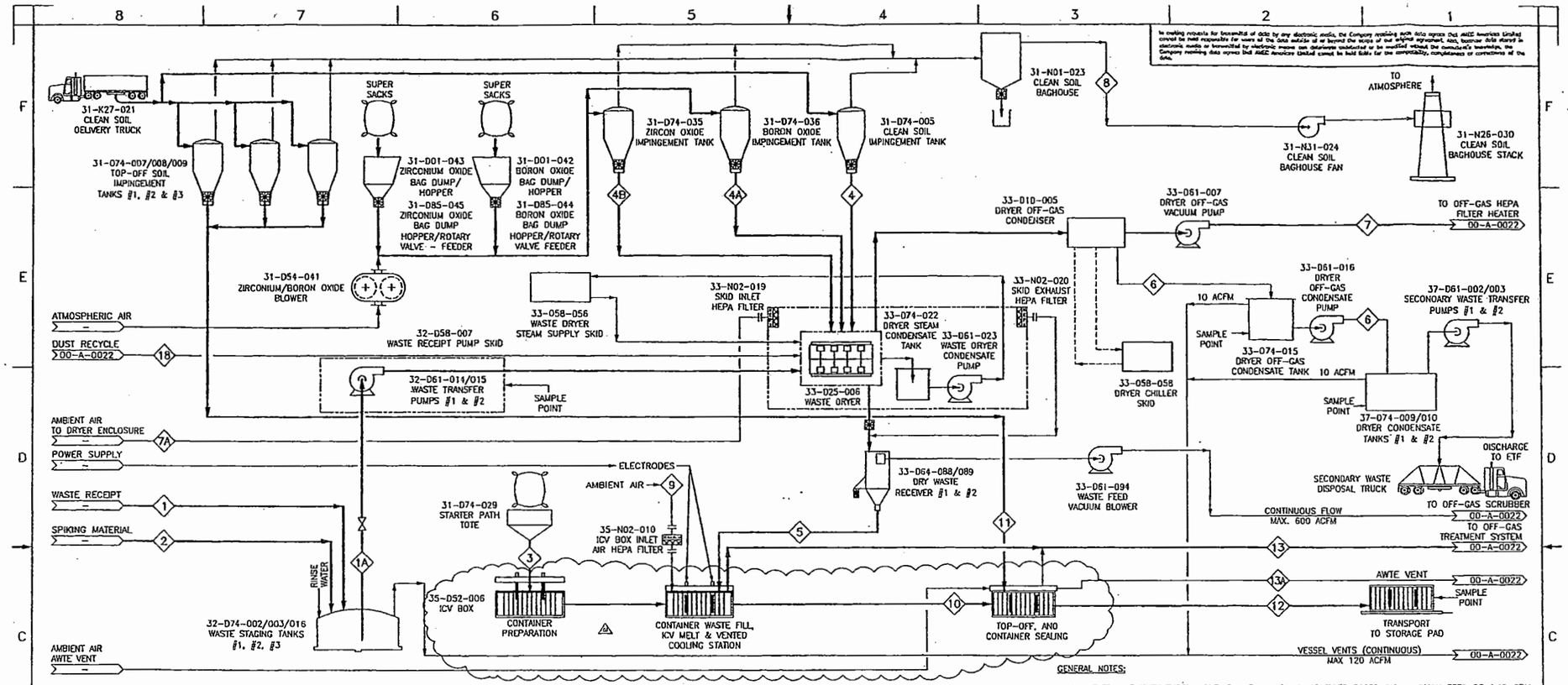

STREAM No.		1	2	1A	3	4	4A	4B	5	6	7	7A	8	9	10	11	12	13	13A	18
STREAM NAME	UNITS	WASTE RECEPT	SPIKING FLOW	WASTE FLOW	STARTER PATHS	SOL	B2O3 ADDITION	ZrO2 ADDITION	ICV FEED	DRYER CONDENSATE	DRYER AIR	DRYER VENT AIR	OFF GAS AIR	ICV AIR	HOT ICV PRODUCT	TOP UP SOIL	COOLED ICV PRODUCT	ICV OFF GAS	AWTE VENT AIR	DUST RECYCLE
PHASE		LIQUID	LIQUID	LIQUID	SOLID	SOLID	SOLID	SOLID	SOLID	LIQUID	GAS	GAS	GAS	GAS	SOLID	SOLID	SOLID	GAS	GAS	SOLID
CONTINUOUS MASS FLOWRATE	lb/hr	703		703	16	329	23.3	32.6	614	460	13	2566	651	350	467	66	467	513	350	5
CONT. VOL. FLOW RATE (LIQ/GAS)	GPM/ACFM	1.09		1.09						0.98	4.2	600	199	80				280	80	
BATCH VOLUME	USG/ACF	1646		1646						1483	2027	7230000	2400000	962168				3382386	962168	
BATCH MASS	lb	17671		17671	3300	8272	586	820	15420	12055	6345	515859	171097	70323	93769	13315	93769	103209	70323	125
BATCH TRANSFER TIME	Hr	1.14		1.14	0.5	0.25	0.25	0.25	1	8	8	201	5	139	201	4	201	139	139	139
BATCH VOLUME FLOW	USGPM/ACFM	24		24						3.1	13	600	1000	115				406	115	
BATCH MASS FLOW	lb/hr	15458		15458	6600	33088	2344	3281	15420	1507	42	2566	4277	506	467	3329	467	743	506	7.2
DESIGN FACTOR	DIMENSIONLESS	1		1	1	1	1	1	1	1.1	1	1	1	1	1	1	1	1	1	1
DESIGN VOLUME FLOW	USGPM/ACFM	24		24						3.4	13	600	1000	115				406	115	
DESIGN MASS FLOW	lb/hr	15458		15458	6600	33088	2344	3281	15420	1658	42	2566	4277	506	467	3329	467	743	506	7.2
SpG		1.29		1.29	2.32	2.40	1.51	5.70	2.09	0.98	0.001	0.001	0.001	0.001	2.65	2.40	2.7	0.0005	0.001	2.54
SpG (BULK SOLIDS ONLY)					1.50	1.43	1.03	1.96	1.49					-	2.65	1.43	2.7			1.50
PRESSURE	in. WG	n/a		n/a	n/a	n/a	n/a	n/a	n/a	n/a	-88.07			-2.24	n/a	n/a	n/a	-2.45	-2.57	n/a
TEMPERATURE	°F	82		82	77	77	77	77	83	122	212	77	77	77	2372	77	122	875	77	572
H2O LIQUID	lb/hr	469.5		469.5	0.41	16.5			6.1	479.8										
H2O GAS	lb/hr																	6.5		
FEED Na	lb/hr	62.6		62.6	0.2	6.5			70						69.2		69.2	0.7		0.7
SO2 GAS	ppmV																	1231		
NOx GAS	ppmV																	119238		
HCl GAS	ppmV																	119		
137Cs	Ci/hr	1.5E+00	0.0E+00	1.5E+00	0.0E+00	0.0E+00	0.0E+00	0.0E+00	1.5E+00	0.0E+00	0.00E+00	0.0E+00	0.0E+00	0.0E+00	1.5E+00	0.0E+00	1.5E+00	1.5E-02	0.0E+00	1.5E-02
99Tc	Ci/hr	1.2E-02	0.0E+00	1.2E-02	0.0E+00	0.0E+00	0.0E+00	0.0E+00	1.2E-02	0.0E+00	0.00E+00	0.0E+00	0.0E+00	0.0E+00	1.2E-02	0.0E+00	1.2E-02	6.2E-04	0.0E+00	6.2E-04
TRU	Ci/hr	9.0E-04	0.0E+00	9.0E-04	0.0E+00	0.0E+00	0.0E+00	0.0E+00	9.0E-04	0.0E+00	0.00E+00	0.0E+00	0.0E+00	0.0E+00	9.0E-04	0.0E+00	9.0E-04	9.0E-08	0.0E+00	9.0E-08
129I	Ci/hr	2.3E-05	0.0E+00	2.3E-05	0.0E+00	0.0E+00	0.0E+00	0.0E+00	2.05E-05	2.05E-05	0.00E+00	0.0E+00	0.0E+00	0.0E+00	2.0E-05	0.0E+00	2.05E-05	1.84E-05	0.0E+00	1.84E-05

GENERAL NOTES:

1. SINGLE TRAIN FACILITY THROUGHPUT: PROCESS FEED IS MODELLED BASED ON A DESIGN FEED OF 1.09 GPM. A TOTAL OPERATING EFFICIENCY OF 70 % SHOULD BE APPLIED TO ACHIEVE A 0.76 GPM PRODUCTION RATE WITH A 20.0 WT % Na2O GLASS LOADING IN THE GLASS PRODUCT.
2. FLOW IN STREAM 2 IS VARIABLE; A TESTING MATRIX WILL DETERMINE THE AMOUNT AND COMPOSITION OF SPIKING MATERIAL TO BE ADDED IN THE INDIVIDUAL TESTS.
3. VALVES ARE ONLY SHOWN TO INDICATE PROCESS INTENT.
4. FEED DATA BASED ON SECTIONS 3.1.2.1.1.1 AND 3.1.2.1.1.2 IN RPP-17403 REV 2.
5. RADIONUCLIDE CONTENT WAS BASED ON TABLE 3-3 IN SECTION 3.1.2.1.1.3 OF RPP-17403 REV 2.

LINES LEGEND:

MAJOR PROCESS STREAM
MINOR PROCESS STREAM
INTERMITTENT FLOWS

Rev.	REVISION DESCRIPTION	Date	By	Chk'd	Appr'd	Appr'd
OJ	REMOVED PROPRIETARY BLOCK	15/SEP/05	JBM	JBM	PAG	PAG
OH	ISSUE FOR CLIE APPROVAL AND SOIL REPORT	10 MAY 05	SB	TH	KM	TH
OG	ISSUED FOR CLIENT APPROVAL & SOIL REPORT	24 MAR 05	KRB	RC	KM	TH
OF	ISSUED FOR CLIENT APPROVAL & SOIL REPORT	15 MAR 05	SB	RC	KM	TH
OE	ISSUED FOR CLIENT APPROVAL & SOIL REPORT	17 FEB 05	SB	LSG	KM	TH
OD	ISSUED FOR CLIENT APPROVAL & SOIL REPORT	14 FEB 05	SB	LSG	KM	TH
OC	ISSUED FOR CLIENT APPROVAL & SOIL REPORT	21 JAN 05	SB	LSG	KM	TH
OB	GENERAL REVISIONS, ISSUED FOR CLIENT COMMENT	18 DEC 04	SB	LSG	KM	TH
OA	GENERAL REVISIONS, ISSUED FOR INTERNAL REVIEW	15 NOV 04	SB	LSG	KM	TH
0	FOR CONSTRUCTION	20 AUG 04	SB	LSG	KM	TH
C	FORMERLY F-145843-00-A-0021, FOR APPROVAL	28 JULY 04	SB	LSG	KM	TH
B	FINAL ISSUE	14 APR 04	SB	LSG	KM	TH
A	ISSUED FOR CLIENT COMMENT	10 MAR 04	SLC		KM	TH

F-145579-00-A-0021 OJ

amec

145579-FINAL DBVS DESIGN

U.S. DEPARTMENT OF ENERGY
Office of River Protection

FULL DBVS
FEED PREPARATION & MELT
PROCESS FLOW DIAGRAM

SIZE F | SCALE NTS

DWG NO	TITLE
-	

DRAWING TRACEABILITY LIST

REF NUMBER	TITLE
-	

REFERENCES

NEXT USED ON

REVISIONS

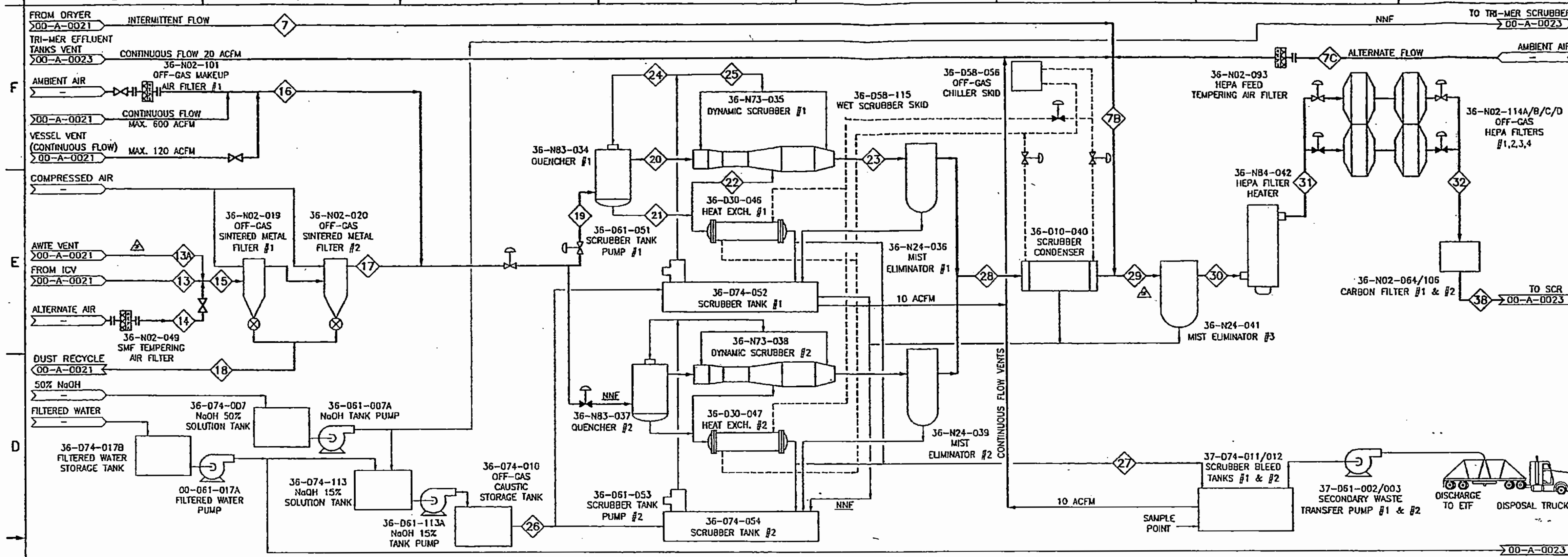

STREAM No.		7	7B	7C	13	13A	14	15	16	17	18	19
STREAM NAME	UNITS	DRYER AIR	DILUTION AIR	DILUTION AIR	ICV OFF GAS	AWTE VENT AIR	ALTERNATE AIR	ICV OFF GAS	SCRUBBER AIR DILUTION	FILTERED OFF GAS	DUST RECYCLE	QUENCH FEED
PHASE		GAS	GAS	GAS	GAS	GAS	GAS	GAS	GAS	GAS	SOLID	GAS
CONTINUOUS MASS FLOWRATE	lb/hr	13	605	605	513	350	725	863	7699	858	5	8558
CONT. VOL. FLOW RATE (LIQ/GAS)	GPM/ACFM	4	137	137	280	80	165	370	1800	380		2154
BATCH VOLUME	USG/ACF	2027	1652188	1652188	3382386	962168	1992474	4466998	21708004	4580641		25981433
BATCH MASS	lb	6345	121548	121548	103209	70323	145626	173533	1547576	172529	125	1720105
BATCH TRANSFER TIME	Hr	8	139	139	139	139	62	139	139	139	139	139
BATCH VOLUME FLOW	USGPM/ACFM	13	198	198	406	115	536	536	2603	549		3115
BATCH MASS FLOW	lb/hr	42	874	874	743	506	2349	1248	11134	1241	7.2	12375
DESIGN FACTOR	DIMENSIONLESS	1	1	1	1	1	1	1	1	1	1	1
DESIGN VOLUME FLOW	USGPM/ACFM	13	198	198	406	115	536	536	2603	549		3115
DESIGN MASS FLOW	lb/hr	42	874	874	743	508	2349	1248	11134	1241	7.2	12375
SpG		0.001	0.001	0.001	0.0005	0.001	0.001	0.001	0.001	0.001	2.54	0.001
SpG (BULK SOLIDS ONLY)											1.5	
PRESSURE	in. WG	-80.1	-80.1	-80.1	-2.46	-2.57	-2.46	-2.6	-12.6	-12.6	n/a	-13.6
TEMPERATURE	°F	212	77	77	875	77	77	572	77	572	572	134
H2O LIQUID	lb/hr										0.00	
H2O GAS	lb/hr				6.5			8.5		6.5		6.5
FEED Na	lb/hr				0.7			0.7			0.7	
SO2 GAS	ppmV				1231			721		723		72
NOx GAS	ppmV				119238			69951		70139		6930
HCl GAS	ppmV				119			70		70		7
137Cs	Ci/hr		0.0E+00	0.0E+00	1.5E-02	0.0E+00	0.0E+00	1.5E-02	0.0E+00	4.6E-06	1.5E-02	4.6E-06
99Tc	Ci/hr		0.0E+00	0.0E+00	6.2E-04	0.0E+00	0.0E+00	6.2E-04	0.0E+00	1.8E-07	6.2E-04	1.8E-07
TRU	Ci/hr		0.0E+00	0.0E+00	9.0E-08	0.0E+00	0.0E+00	9.0E-08	0.0E+00	2.7E-11	9.0E-08	2.9E-11
129I	Ci/hr		0.0E+00	0.0E+00	1.8E-05	0.0E+00	0.0E+00	1.8E-05	0.0E+00	5.5E-09	1.8E-05	5.5E-09

STREAM No.	20	21	22	23	24	25	26	27	28	29	30	31	32	38
STREAM NAME	QUENCHER DISCHARGE	QUENCH RETURN	SCRUB RETURN	SCRUB DISCHARGE	QUENCH SOLUTION	SCRUB SOLUTION	CAUSTIC MAKE-UP	SCRUB RETURN BLEED	CONDENSER FEED	CONDENSER DISCHARGE	HEATER FEED	HEPA FEED	C-FILTER INLET	C-FILTER DISCHARGE
PHASE	GAS	LIQUID	LIQUID	GAS	LIQUID	LIQUID	LIQUID	LIQUID	GAS	GAS	GAS	GAS	GAS	GAS
CONTINUOUS MASS FLOWRATE	8695	5198	10655	8709	5335	10689	447	296	8709	9313	9313	9313	9313	9313
CONT. VOL. FLOW RATE (LIQ/GAS)	2042	9.7	19.9	2409	10.0	20.0	0.859	0.55	2427	2642	2642	3153	3210	3258
BATCH VOLUME	24626733	117381	240563	29055968	120547	241094	10355	6691	29272607	31863751	31863751	38028793	38711928	39266230
BATCH MASS	1747658	1044786	2141681	1750458	1072273	2144546	89882	59569	1750458	1872005	1872005	1872005	1872005	1872005
BATCH TRANSFER TIME	139	139	139	139	139	139	139	139	139	139	139	139	139	139
BATCH VOLUME FLOW	2953	14.1	28.8	3484	14.5	28.9	1.2	0.8	3510	3821	3821	4560	4642	4708
BATCH MASS FLOW	12573	7516	15408	12593	7714	15428	647	429	12593	13468	13468	13468	13468	13468
DESIGN FACTOR	1	1	1	1	1	1	1	1	1	1	1	1	1	1.0
DESIGN VOLUME FLOW	2953	14.1	28.8	3484	14.5	28.9	1.2	0.80	3510	3821	3821	4560	4642	4708
DESIGN MASS FLOW	12573	7516	15408	12593	7714	15428	647	429	12593	13468	13468	13468	13468	13468
SpG	0.001	1.1	1.1	0.001	1.1	1.1	1.04	1.07	0.001	0.001	0.001	0.001	0.001	0.001
SpG (BULK SOLIDS ONLY)														
PRESSURE	-15.6	n/a	n/a	-71.6	n/a	n/a	n/a	n/a	-74.1	-80.1	-82.6	-85.1	-90.8	-95.3
TEMPERATURE	70.9	70.3	75	75	77	77	77	77	75	75	75	167	167	167
H2O LIQUID	0.91	4639	9534	0	4778	9556	425	265	0	0				
H2O GAS	145			171					171	171	171	171	171	171
FEED Na				0.00										
SO2 GAS	42			2.1					2.1	2.0	2.0	2.0	2.0	2.0
NOx GAS	6709			6546					6546	6125	6125	6125	6125	6125
HCl GAS	1			0.2					0.2	0.15	0.15	0.15	0.15	0.15
137Cs	4.6E-07	1.2E-04	2.3E-04	4.6E-08	1.1E-04	2.3E-04	0.0E+00	6.5E-06	4.6E-09	4.6E-08	4.6E-08	4.6E-08	4.6E-10	4.6E-10
99Tc	1.8E-08	4.7E-06	9.0E-06	1.8E-09	4.5E-06	9.0E-06	0.0E+00	2.6E-07	1.8E-09	1.8E-09	1.8E-09	1.8E-09	1.8E-11	1.8E-11
TRU	2.5E-12	7.0E-10	1.4E-09	2.7E-13	6.7E-10	1.3E-09	0.0E+00	3.8E-11	2.7E-13	2.7E-13	2.7E-13	2.7E-13	2.7E-15	2.7E-15
129I	5.5E-10	1.2E-07	2.4E-07	5.5E-11	1.2E-07	2.4E-07	0.0E+00	6.8E-09	5.5E-11	5.5E-11	5.5E-11	5.5E-11	5.5E-11	5.5E-13

GENERAL NOTES

1. VALVES ARE SHOWN TO INDICATE PROCESS INTENT.
2. NNF – NORMALLY NO FLOW

LINES LEGEND:

- MAJOR PROCESS STREAM
- MINOR PROCESS STREAM
- INTERMITTENT FLOWS

REV.	REVISION DESCRIPTION	DATE	BY	CHK'D		
0H	ISSUE FOR CH2 APPROVAL AND 90% REPORT	12 MAY 05	SB	TH	KN	TH
0G	ISSUED FOR CLIENT APPROVAL & 90% REPORT	24 MAR 05	RRB	RC	KN	TH
0F	ISSUED FOR CLIENT APPROVAL & 90% REPORT	15 MAR 05	SB	RC	KN	TH
0E	ISSUED FOR CLIENT APPROVAL & 90% REPORT	17 FEB 05	SB	LSC	KN	TH
0D	ISSUED FOR CLIENT APPROVAL & 90% REPORT	14 FEB 05	SB	LSC	KN	TH
0C	ISSUED FOR CLIENT APPROVAL & 90% REPORT	21 JAN 05	SB	LSC	KN	TH
0B	GENERAL REVISIONS ISSUED FOR CLIENT COMMENT	16 DEC 04	SB	LSC	KN	TH
0A	GENERAL REVISION, ISSUED FOR INTERNAL REVIEW	15 NOV 04	SB	LSC	KN	TH
0	FOR CONSTRUCTION	20 AUG 04	SB	LSC	KN	TH
C	FORMERLY F-145643-00-A-0022, FOR APPROVAL	28 JULY 04	SB	LSC	KN	TH
B	FINAL ISSUE	14 APR 04	SB	LSC	KN	TH
A	ISSUED FOR CLIENT COMMENT	10 MAR 04	SLC		KN	TH

DWG NO | TITLE | REF NUMBER | TITLE
DRAWING TRACEABILITY LIST | REFERENCES | NEXT USED ON

F-145579-00-A-0022 0H

U.S. DEPARTMENT OF ENERGY
Office of River Protection

amec

FULL DBVS
TRAILER OFF-GAS TREATMENT
PROCESS FLOW DIAGRAM

F
NTS

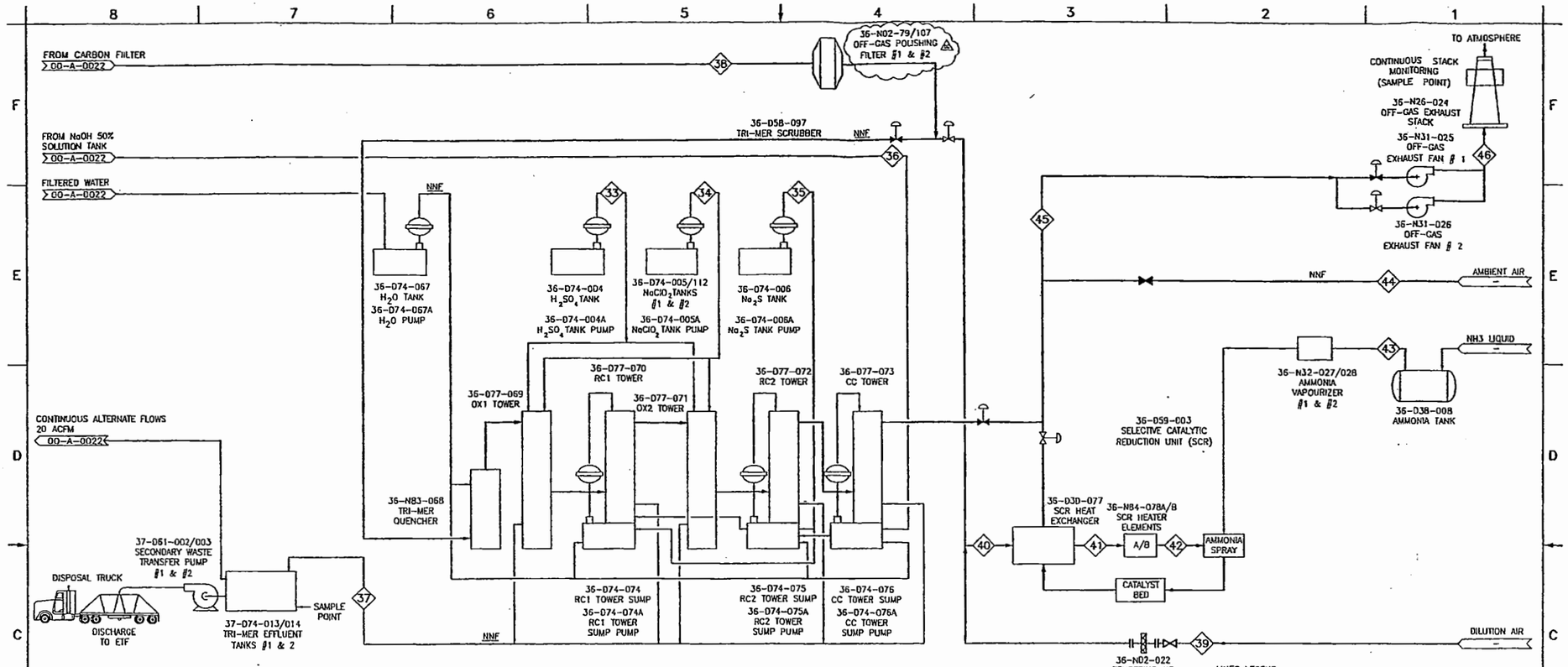

LINES LEGEND:

——— MAJOR PROCESS STREAM

——— MINOR PROCESS STREAM

- - - - - - - INTERMITTENT FLOWS

GENERAL NOTES:

1. NOx EMISSION AT STREAM 46 WILL BE LESS THAN 1.5lbs/hr.
2. VALVES ARE SHOWN TO INDICATE PROCESS INTENT
3. NNF – NORMALLY NO FLOW

		ALTERNATE – NORMALLY NO FLOW													
STREAM No.		33	34	35	36	37	38	39	40	41	42	43	44	45	46
STREAM NAME	UNITS	36% SULFURIC ACID	NaClO2	Na2S	50% NaOH	RETURN SOLUTION	C-FILTER DISCHARGE	DILUTION AIR	SCR FEED	PART HEATED SCR FEED	HEATED SCR FEED	AMMONIA FEED	AMBIENT AIR	SCR DISCHARGE	FAN EXHAUST
PHASE		LIQUID	LIQUID	LIQUID	LIQUID	LIQUID	GAS	GAS	GAS	GAS	GAS	GAS	GAS	GAS	GAS
CONTINUOUS MASS FLOWRATE	lb/hr						9313	7415	16729	16729	16729	23		16752	16752
CONT. VOL. FLOW RATE (LIQ/GAS)	GPM/ACFM						3256	2200	5319	11459	12560	9		7092	5847
BATCH VOLUME	USG/ACF						39266230	26526082	64150629	138192312	151473347	107893		85530055	70513996
BATCH MASS	lb						1872005	1490457	3362493	3362462	3362462	4692		3367154	3367154
BATCH TRANSFER TIME	Hr						139	139	139	139	139	139	139	139	139
BATCH VOLUME FLOW	USGPM/ACFM						4708	3181	7692	16570	18162	13		10255	8455
BATCH MASS FLOW	lb/hr						13468	10723	24191	24190	24190	34		24224	24224
DESIGN FACTOR	DIMENSIONLESS						1	1	1	1	1	1		1	1
DESIGN VOLUME FLOW	USGPM/ACFM						4708	3181	7692	16570	18162	13		10255	8455
DESIGN MASS FLOW	lb/hr						13468	10723	24191	24190	24190	34		24224	24224
SpG							0.001	0.001	0.001	0.0004	0.0004	0.0007	0.001	0.0006	0.0008
SpG (BULK SOLIDS ONLY)															
PRESSURE	in. WG						-95.3	-96.2	-96.2	-116.9	-115.9	n/a		-117.6	0.6
TEMPERATURE	°F						167	77	128	691	800	77	77	248	372
H2O LIQUID	lb/hr														
H2O GAS	lb/hr						171		171	171	171			208	208
FEED Na	lb/hr														
SO2 GAS	ppmV						2.0		1.1	1.1	1.1			1.1	1.1
NOx GAS	ppmV						6125		3425	3425	3425			92	92
HCl GAS	ppmV						0.15		0.08	0.08	0.08			0.08	0.08
137Cs	Ci/hr	0.0E+00	0.0E+00	0.0E+00	0.0E+00	0.0E+00	4.6E-10	0.0E+00	4.6E-10	4.6E-10	4.6E-10	0.0E+00	0.0E+00	4.6E-10	4.6E-10
99Tc	Ci/hr	0.0E+00	0.0E+00	0.0E+00	0.0E+00	0.0E+00	1.8E-11	0.0E+00	1.8E-11	1.8E-11	1.8E-11	0.0E+00	0.0E+00	1.8E-11	1.8E-11
TRU	Ci/hr	0.0E+00	0.0E+00	0.0E+00	0.0E+00	0.0E+00	2.7E-15	0.0E+00	2.7E-15	2.7E-15	2.7E-15	0.0E+00	0.0E+00	2.7E-15	2.7E-15
129I	Ci/hr	0.0E+00	0.0E+00	0.0E+00	0.0E+00	0.0E+00	5.5E-13	0.0E+00	5.5E-13	5.5E-13	5.5E-13	0.0E+00	0.0E+00	5.5E-13	5.5E-13

REV	REVISION DESCRIPTION	Date	By	Chk'd	Appr'd	Appr'd
OH	ISSUE FOR CH2 APPROVAL AND 90% REPORT	12 MAY 05	SB	TH	KM	TH
OG	ISSUED FOR CLIENT APPROVAL & 90% REPORT	24 MAR 05	RPB	RO	KM	TH
OF	ISSUED FOR CLIENT APPROVAL & 90% REPORT	15 MAR 05	SB	RC	KM	TH
OE	ISSUED FOR CLIENT APPROVAL & 90% REPORT	17 FEB 05	SB	LSC	KM	TH
OD	ISSUED FOR CLIENT APPROVAL & 90% REPORT	14 FEB 05	SB	LSC	KM	TH
OC	ISSUED FOR CLIENT APPROVAL & 90% REPORT	21 JAN 05	SB	LSC	KM	TH
OB	GENERAL REVISIONS, ISSUED FOR CLIENT COMMENT	16 DEC 04	SB	LSC	KM	TH
OA	GENERAL REVISIONS, ISSUED FOR INTERNAL REVIEW	15 NOV 04	SB	LSC	KM	TH
0	FOR CONSTRUCTION	20 AUG 04	SB	LSC	KM	TH
C	FORMERLY F-145643-00-A-0023, FOR APPROVAL	26 JULY 04	SB	LSC	KM	TH
B	FINAL ISSUE	16 APR 04	SC	LSC	KM	TH
A	ISSUED FOR CLIENT COMMENT	10 MAR 04	SLC		KM	TH

F-145579-00-A-0023 OH

U.S. DEPARTMENT OF ENERGY
Office of River Protection

amec

FULL DBVS
TRI-MER AND SCR
PROCESS FLOW DIAGRAM

F | MTS

DWG NO	TITLE	REF NUMBER	TITLE
DRAWING TRACEABILITY LIST		REFERENCES	

NEXT USED ON

REVISIONS

In making requests for transmittal of data by any electronic media, the Company receiving such data agrees that AMEC Americas Limited cannot be held responsible for users of the data outside of or beyond the scope of our original agreement. Also, because data stored in electronic media or transmitted by electronic means can deteriorate undetected or be modified without the consultant's knowledge, the Company receiving data agrees that AMEC Americas Limited cannot be held liable for the compatibility, completeness or correctness of the data.

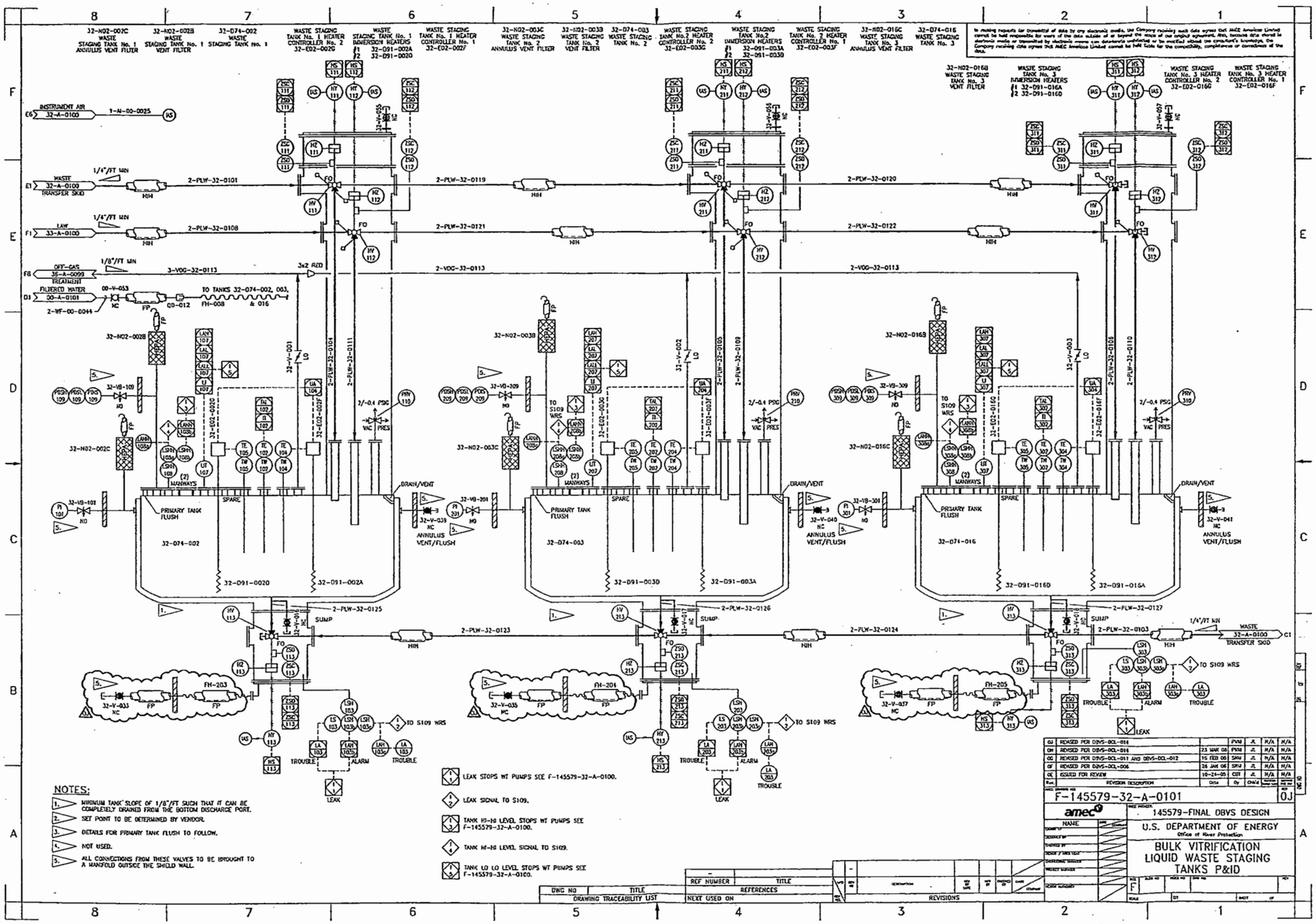
32-N02-002C WASTE STAGING TANK No. 1 ANNULUS VENT FILTER
32-N02-002B WASTE STAGING TANK No. 1 VENT FILTER
32-D74-002 WASTE STAGING TANK No. 1
WASTE STAGING TANK No. 1 HEATER CONTROLLER No. 2 32-E02-002G
WASTE STAGING TANK No. 1 IMMERSION HEATERS #1 32-D91-002A #2 32-D91-002D
WASTE STAGING TANK No. 1 HEATER CONTROLLER No. 1 32-E02-002F
32-N02-003C WASTE STAGING TANK No. 2 ANNULUS VENT FILTER
32-N02-003B WASTE STAGING TANK No. 2 VENT FILTER
32-D74-003 WASTE STAGING TANK No. 2
WASTE STAGING TANK No. 2 HEATER CONTROLLER No. 2 32-E02-003G
WASTE STAGING TANK No. 2 IMMERSION HEATERS #1 32-D91-003A #2 32-D91-003D
WASTE STAGING TANK No. 2 HEATER CONTROLLER No. 1 32-E02-003F
32-N02-016C WASTE STAGING TANK No. 3 ANNULUS VENT FILTER
32-D74-016 WASTE STAGING TANK No. 3
32-N02-016B WASTE STAGING TANK No. 3 VENT FILTER
WASTE STAGING TANK No. 3 IMMERSION HEATERS #1 32-D91-016A #2 32-D91-016D
WASTE STAGING TANK No. 3 HEATER CONTROLLER No. 2 32-E02-016G
WASTE STAGING TANK No. 3 HEATER CONTROLLER No. 1 32-E02-016F
INSTRUMENT AIR 32-A-0100
WASTE 32-A-0100 TRANSFER SKID
LAW 33-A-0100
OFF-GAS 35-A-0099 TREATMENT
FILTERED WATER 00-A-0101
TO TANKS 32-D74-002, 003, & 016
PRIMARY TANK FLUSH
ANNULUS VENT/FLUSH
DRAIN/VENT
SUMP
SPARE
(2) MANWAYS
TO S109 WRS
TROUBLE
ALARM
LEAK
NOTES:
1. MINIMUM TANK SLOPE OF 1/8"/FT SUCH THAT IT CAN BE COMPLETELY DRAINED FROM THE BOTTOM DISCHARGE PORT.
2. SET POINT TO BE DETERMINED BY VENDOR.
3. DETAILS FOR PRIMARY TANK FLUSH TO FOLLOW.
4. NOT USED.
5. ALL CONNECTIONS FROM THESE VALVES TO BE BROUGHT TO A MANIFOLD OUTSIDE THE SHIELD WALL.
LEAK STOPS WT PUMPS SEE F-145579-32-A-0100.
LEAK SIGNAL TO S109.
TANK HI-HI LEVEL STOPS WT PUMPS SEE F-145579-32-A-0100.
TANK HI-HI LEVEL SIGNAL TO S109.
TANK LO LO LEVEL STOPS WT PUMPS SEE F-145579-32-A-0100.
F-145579-32-A-0101
0J
145579-FINAL DBVS DESIGN
U.S. DEPARTMENT OF ENERGY
Office of River Protection
BULK VITRIFICATION
LIQUID WASTE STAGING
TANKS P&ID
DRAWING TRACEABILITY LIST
REFERENCES
REVISIONS

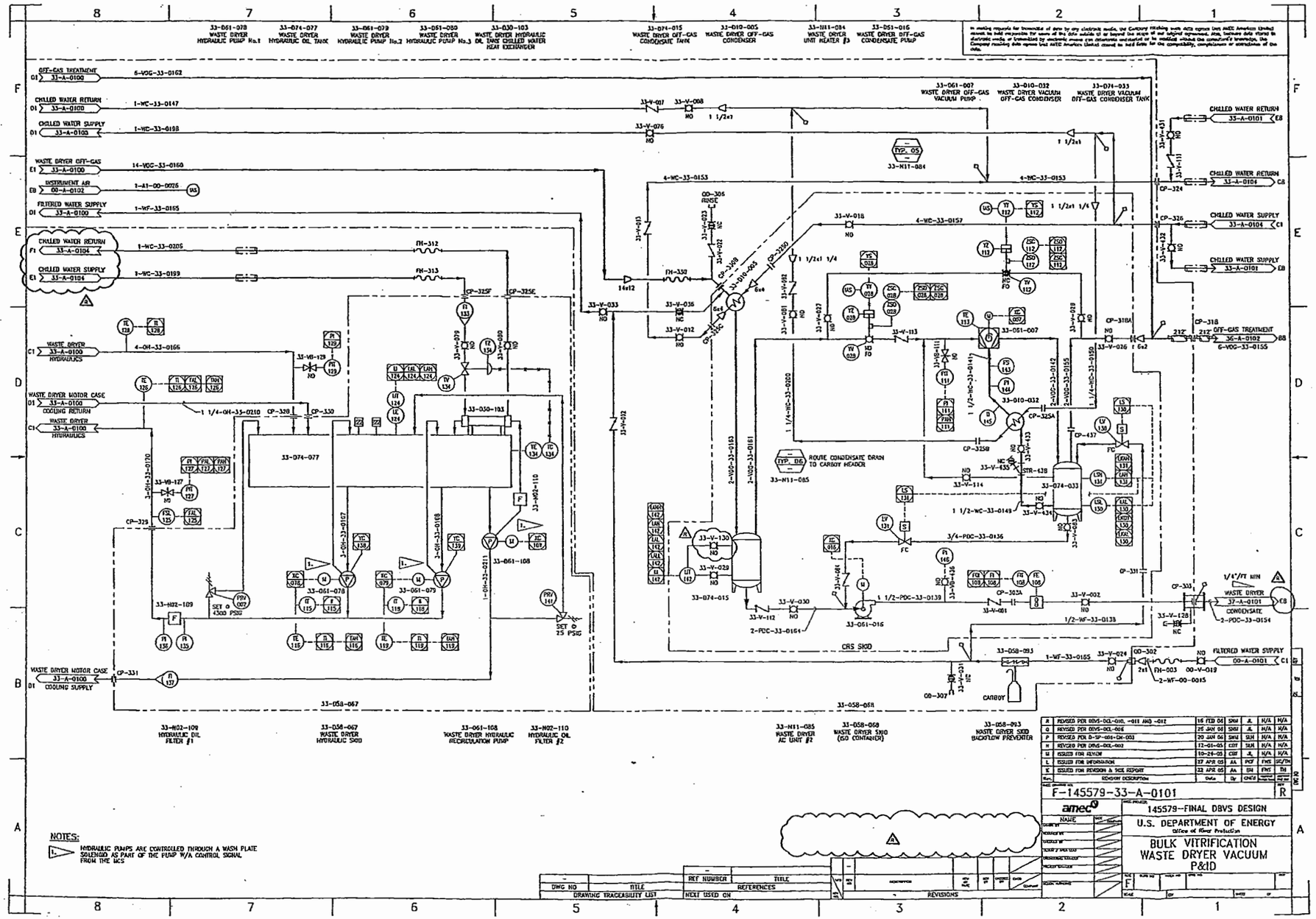
33-061-078 WASTE DRYER HYDRAULIC PUMP No.1
33-074-077 WASTE DRYER HYDRAULIC OIL TANK
33-061-079 WASTE DRYER HYDRAULIC PUMP No.2
33-061-080 WASTE DRYER HYDRAULIC PUMP No.3
33-030-103 WASTE DRYER HYDRAULIC OIL TANK CHILLED WATER HEAT EXCHANGER
33-074-015 WASTE DRYER OFF-GAS CONDENSATE TANK
33-010-005 WASTE DRYER OFF-GAS CONDENSER
33-N11-084 WASTE DRYER UNIT HEATER #3
33-061-016 WASTE DRYER OFF-GAS CONDENSATE PUMP
33-061-007 WASTE DRYER OFF-GAS VACUUM PUMP
33-010-032 WASTE DRYER VACUUM OFF-GAS CONDENSER
33-074-033 WASTE DRYER VACUUM OFF-GAS CONDENSER TANK
33-074-077
33-061-078
33-061-079
33-061-108
33-074-015
33-061-016
33-010-032
33-061-007
33-074-033
33-058-067
33-058-068
33-058-093
CARBOY
CRS SKID
ROUTE CONDENSATE DRAIN TO CARBOY HEADER
33-N02-109 HYDRAULIC OIL FILTER #1
33-058-067 WASTE DRYER HYDRAULIC SKID
33-061-108 WASTE DRYER HYDRAULIC RECIRCULATION PUMP
33-N02-110 HYDRAULIC OIL FILTER #2
33-N11-085 WASTE DRYER AC UNIT #2
33-058-069 WASTE DRYER SKID (GO CONTAINER)
33-058-093 WASTE DRYER SKID BACKFLOW PREVENTER
NOTES:
1. HYDRAULIC PUMPS ARE CONTROLLED THROUGH A WASH PLATE SOLENOID AS PART OF THE PUMP W/A CONTROL SIGNAL FROM THE MCS
F-145579-33-A-0101
amec
145579-FINAL DBVS DESIGN
U.S. DEPARTMENT OF ENERGY
Office of River Protection
BULK VITRIFICATION
WASTE DRYER VACUUM
P&ID
DRAWING TRACEABILITY LIST
REFERENCES
REVISIONS

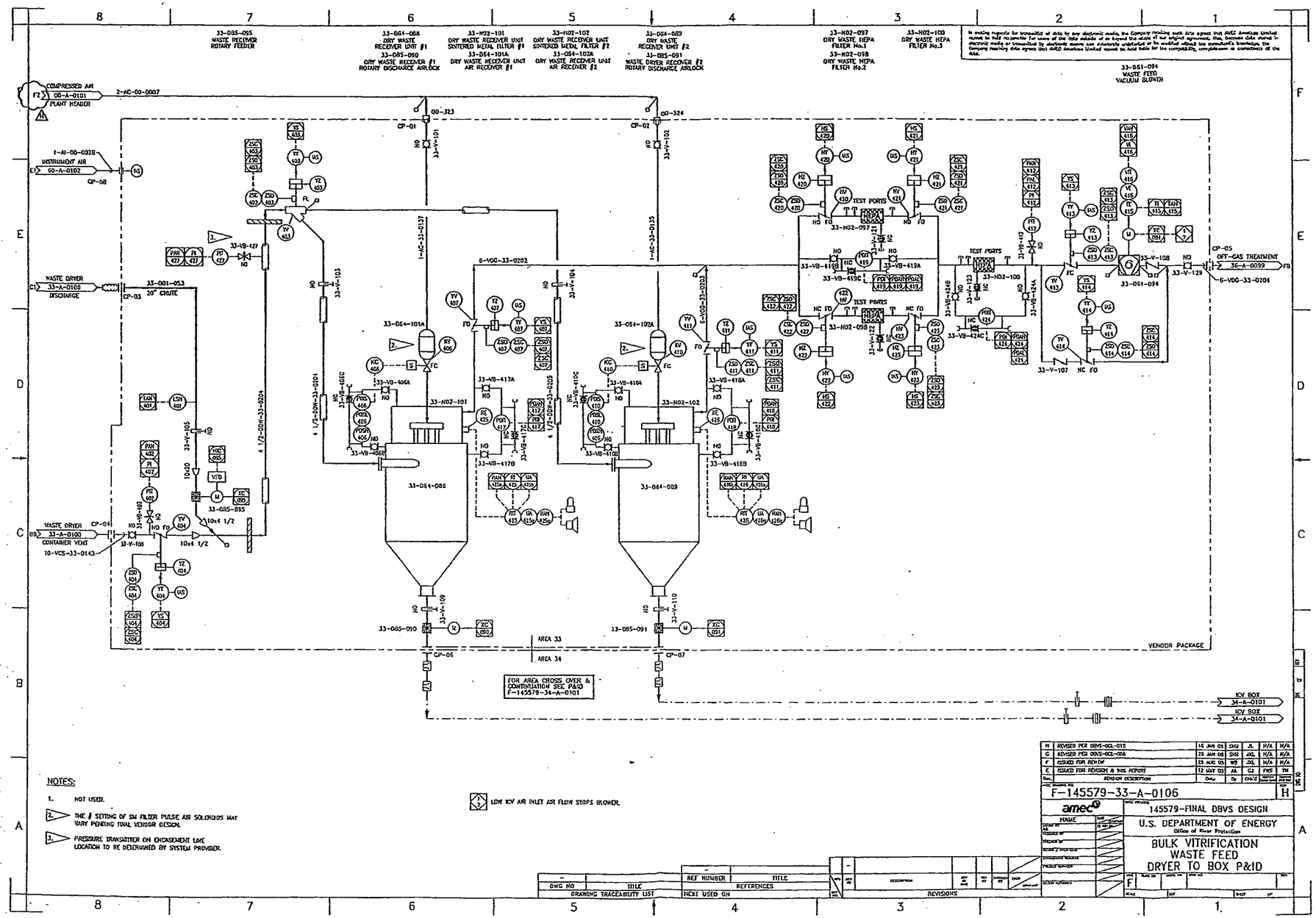
33-D85-095
WASTE RECEIVER
ROTARY FEEDER
33-D64-088
DRY WASTE
RECEIVER UNIT #1
33-D85-090
DRY WASTE RECEIVER #1
ROTARY DISCHARGE AIRLOCK
33-H02-101
DRY WASTE RECEIVER UNIT
SINTERED METAL FILTER #1
33-D64-101A
DRY WASTE RECEIVER UNIT
AIR RECEIVER #1
33-H02-102
DRY WASTE RECEIVER UNIT
SINTERED METAL FILTER #2
33-D64-102A
DRY WASTE RECEIVER UNIT
AIR RECEIVER #2
33-D64-089
DRY WASTE
RECEIVER UNIT #2
33-D85-091
WASTE DRYER RECEIVER #2
ROTARY DISCHARGE AIRLOCK
33-H02-097
DRY WASTE HEPA
FILTER No.1
33-H02-098
DRY WASTE HEPA
FILTER No.2
33-H02-100
DRY WASTE HEPA
FILTER No.3
33-D61-094
WASTE FEED
VACUUM BLOWER
COMPRESSED AIR
PLANT HEADER
INSTRUMENT AIR
WASTE DRYER
DISCHARGE
20" CHUTE
WASTE DRYER
CONTAINER VENT
TEST PORTS
OFF-GAS TREATMENT
AREA 33
AREA 34
VENDOR PACKAGE
FOR AREA CROSS OVER &
CONTINUATION SEE P&ID
F-145579-34-A-0101
KOV BOX
34-A-0101
LOW KOV AIR INLET AIR FLOW STOPS BLOWER.
NOTES:
1. NOT USED.
2. THE # SETTING OF SM FILTER PULSE AIR SOLENOIDS MAY VARY PENDING TOTAL VENDOR DESIGN.
3. PRESSURE TRANSMITTER ON ENCASEMENT LINE LOCATION TO BE DETERMINED BY SYSTEM PROVIDER.
H REVISED PER DBVS-DCL-012 16 JAN 05
G REVISED PER DBVS-DCL-006 25 JAN 05
F ISSUED FOR REVIEW 25 AUG 05
E ISSUED FOR REVISION & BOX REPORT 12 MAY 05
F-145579-33-A-0106
amec
145579-FINAL DBVS DESIGN
U.S. DEPARTMENT OF ENERGY
Office of River Protection
BULK VITRIFICATION
WASTE FEED
DRYER TO BOX P&ID
DRAWING TRACEABILITY LIST
REFERENCES
REVISIONS

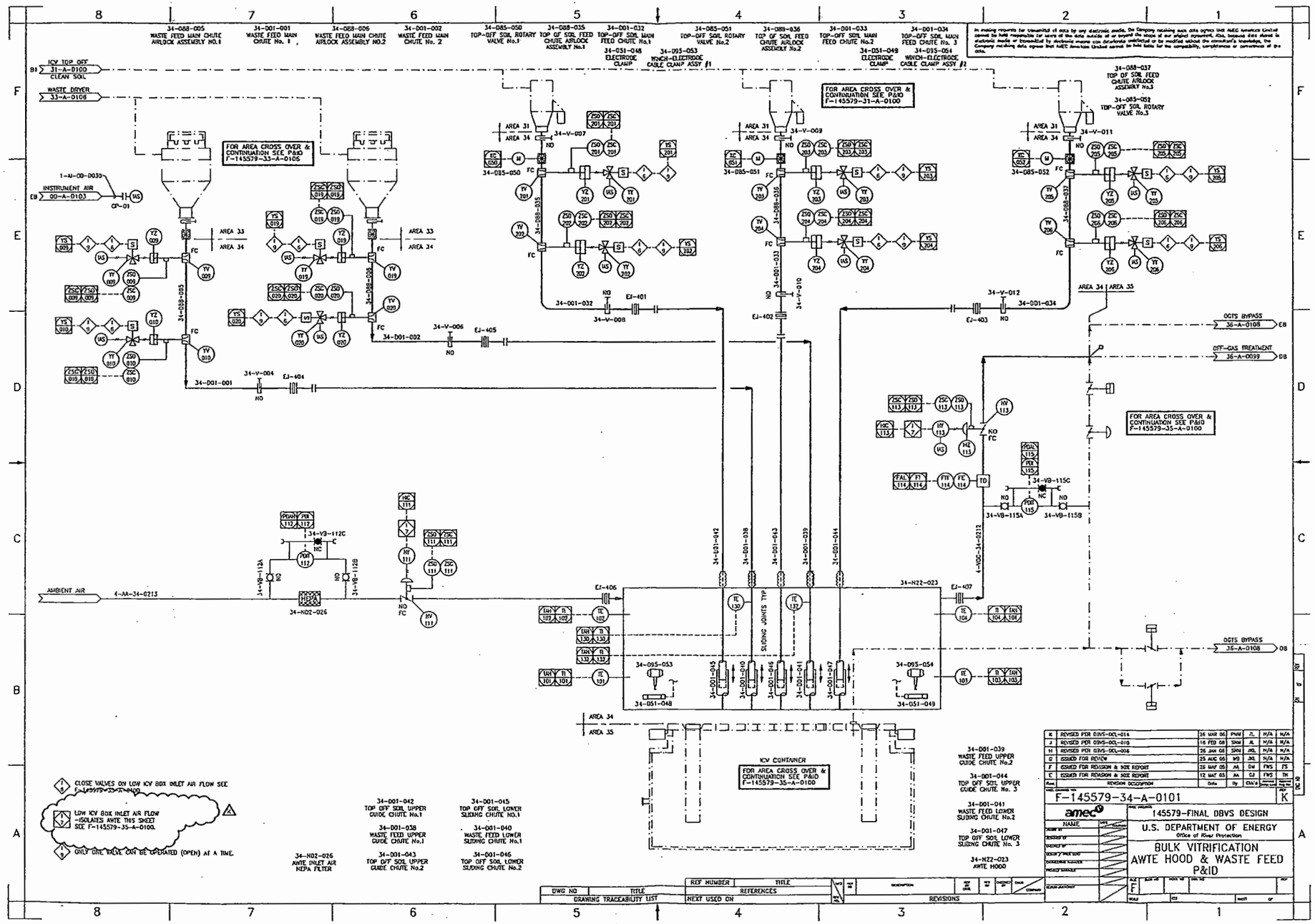
34-088-005 WASTE FEED MAIN CHUTE AIRLOCK ASSEMBLY NO.1
34-001-001 WASTE FEED MAIN CHUTE No. 1
34-088-006 WASTE FEED MAIN CHUTE AIRLOCK ASSEMBLY NO.2
34-001-002 WASTE FEED MAIN CHUTE No. 2
34-085-050 TOP-OFF SOIL ROTARY VALVE No.1
34-088-035 TOP OF SOIL FEED CHUTE AIRLOCK ASSEMBLY No.1
34-001-032 TOP-OFF SOIL MAIN FEED CHUTE No.1
34-051-048 ELECTRODE CLAMP
34-095-053 WINCH-ELECTRODE CABLE CLAMP ASSY #1
34-085-051 TOP-OFF SOIL ROTARY VALVE No.2
34-088-036 TOP OF SOIL FEED CHUTE AIRLOCK ASSEMBLY No.2
34-001-033 TOP-OFF SOIL MAIN FEED CHUTE No.2
34-051-049 ELECTRODE CLAMP
34-001-034 TOP-OFF SOIL MAIN FEED CHUTE No. 3
34-095-054 WINCH-ELECTRODE CABLE CLAMP ASSY #2
34-088-037 TOP OF SOIL FEED CHUTE AIRLOCK ASSEMBLY No.3
34-085-052 TOP-OFF SOIL ROTARY VALVE No.3
ICV TOP OFF 31-A-0100 CLEAN SOIL
WASTE DRYER 33-A-0108
INSTRUMENT AIR 00-A-0103
FOR AREA CROSS OVER & CONTINUATION SEE P&ID F-145579-33-A-0105
FOR AREA CROSS OVER & CONTINUATION SEE P&ID F-145579-31-A-0100
FOR AREA CROSS OVER & CONTINUATION SEE P&ID F-145579-35-A-0100
AREA 31
AREA 33
AREA 34
AREA 35
OGTS BYPASS 36-A-0108
OFF-GAS TREATMENT 36-A-0099
AMBIENT AIR
34-N02-026
34-N22-023
SLIDING JOINTS TYP
ICV CONTAINER
FOR AREA CROSS OVER & CONTINUATION SEE P&ID F-145579-35-A-0100
CLOSE VALVES ON LOW ICV BOX INLET AIR FLOW SEE F-145579-35-A-0100
LOW ICV BOX INLET AIR FLOW -ISOLATES AWTE THIS SHEET SEE F-145579-35-A-0100.
ONLY ONE VALVE CAN BE OPERATED (OPEN) AT A TIME.
34-N02-026 AWTE INLET AIR HEPA FILTER
34-001-042 TOP OFF SOIL UPPER GUIDE CHUTE No.1
34-001-038 WASTE FEED UPPER GUIDE CHUTE No.1
34-001-043 TOP OFF SOIL UPPER GUIDE CHUTE No.2
34-001-045 TOP OFF SOIL LOWER SLIDING CHUTE NO.1
34-001-040 WASTE FEED LOWER SLIDING CHUTE No.1
34-001-046 TOP OFF SOIL LOWER SLIDING CHUTE No.2
34-001-039 WASTE FEED UPPER GUIDE CHUTE No.2
34-001-044 TOP OFF SOIL UPPER GUIDE CHUTE No. 3
34-001-041 WASTE FEED LOWER SLIDING CHUTE No.2
34-001-047 TOP OFF SOIL LOWER SLIDING CHUTE No. 3
34-N22-023 AWTE HOOD
REVISED FOR DBVS-DCL-014
REVISED FOR DBVS-DCL-010
REVISED FOR DBVS-DCL-006
ISSUED FOR REVIEW
ISSUED FOR REVISION & 30% REPORT
ISSUED FOR REVISION & 30% REPORT
F-145579-34-A-0101
K
amec
145579-FINAL DBVS DESIGN
U.S. DEPARTMENT OF ENERGY
Office of River Protection
BULK VITRIFICATION
AWTE HOOD & WASTE FEED
P&ID
DRAWING TRACEABILITY LIST
REVISIONS

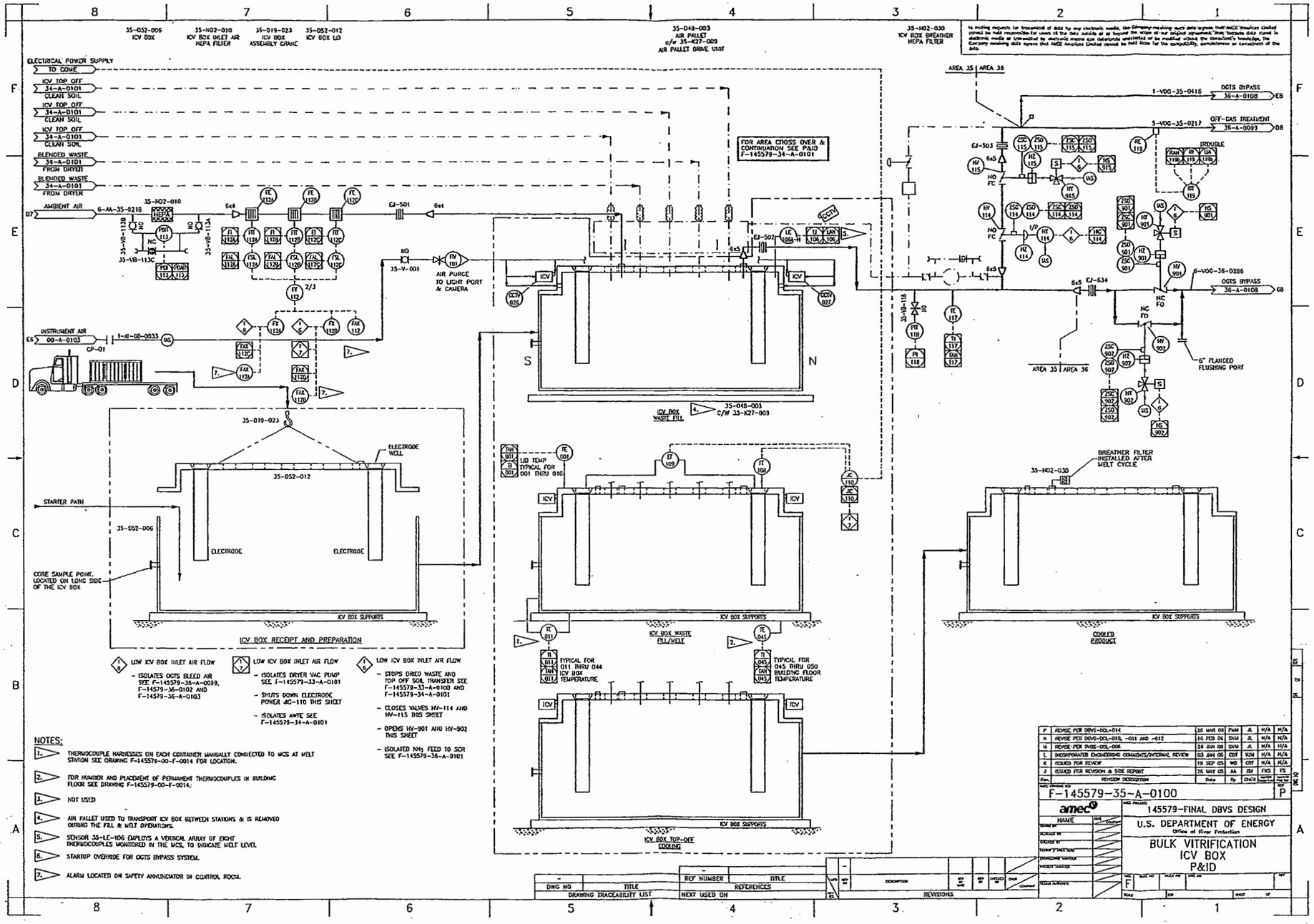
ELECTRICAL POWER SUPPLY
TO COME
ICV TOP OFF
34-A-0101
CLEAN SOIL
BLENDED WASTE
34-A-0101
FROM DRYER
AMBIENT AIR
INSTRUMENT AIR
00-A-0103
CP-01
AIR PURGE TO LIGHT PORT & CAMERA
FOR AREA CROSS OVER & CONTINUATION SEE P&ID F-145579-34-A-0101
AREA 35 | AREA 36
OGTS BYPASS
36-A-0108
OFF-GAS TREATMENT
36-A-0099
6" FLANGED FLUSHING PORT
BREATHER FILTER INSTALLED AFTER MELT CYCLE
35-N02-030
35-D19-023
35-D52-012
35-D52-006
ELECTRODE WELL
ELECTRODE
STARTER PATH
CORE SAMPLE POINT, LOCATED ON LONG SIDE OF THE ICV BOX
ICV BOX SUPPORTS
ICV BOX RECEIPT AND PREPARATION
ICV BOX WASTE FILL/MELT
ICV BOX TOP-OFF COOLING
COOLED PRODUCT
S
N
LOW ICV BOX INLET AIR FLOW
- ISOLATES OGTS BLEED AIR SEE F-145579-36-A-0039, F-14579-36-0102 AND F-14579-36-A-0103
LOW ICV BOX INLET AIR FLOW
- ISOLATES DRYER VAC PUMP SEE F-145579-33-A-0101
- SHUTS DOWN ELECTRODE POWER JIC-110 THIS SHEET
- ISOLATES AWTE SEE F-145579-34-A-0101
LOW ICV BOX INLET AIR FLOW
- STOPS DRECO WASTE AND TOP OFF SOIL TRANSFER SEE F-145579-33-A-0100 AND F-145579-34-A-0101
- CLOSES VALVES HV-114 AND HV-115 THIS SHEET
- OPENS HV-901 AND HV-902 THIS SHEET
- ISOLATED NNS FEED TO SCR SEE F-145579-36-A-0101
NOTES:
1. THERMOCOUPLE HARNESSES ON EACH CONTAINER MANUALLY CONNECTED TO WCS AT MELT STATION SEE DRAWING F-145579-00-F-0014 FOR LOCATION.
2. FOR NUMBER AND PLACEMENT OF PERMANENT THERMOCOUPLES IN BUILDING FLOOR SEE DRAWING F-145579-00-F-0014.
3. NOT USED
4. AIR PALLET USED TO TRANSPORT ICV BOX BETWEEN STATIONS & IS REMOVED DURING THE FILL & MELT OPERATIONS.
5. SENSOR 35-LE-106 DEPLOYS A VERTICAL ARRAY OF EIGHT THERMOCOUPLES MONITORED IN THE WCS, TO INDICATE MELT LEVEL
6. STARTUP OVERRIDE FOR OGTS BYPASS SYSTEM.
7. ALARM LOCATED ON SAFETY ANNUNCIATOR IN CONTROL ROOM.
DRAWING TRACEABILITY LIST
DWG NO | TITLE | RO' NUMBER | TITLE
REFERENCES
NEXT USED ON
REVISIONS
F-145579-35-A-0100
amec
145579-FINAL DBVS DESIGN
U.S. DEPARTMENT OF ENERGY
Office of River Protection
BULK VITRIFICATION
ICV BOX
P&ID

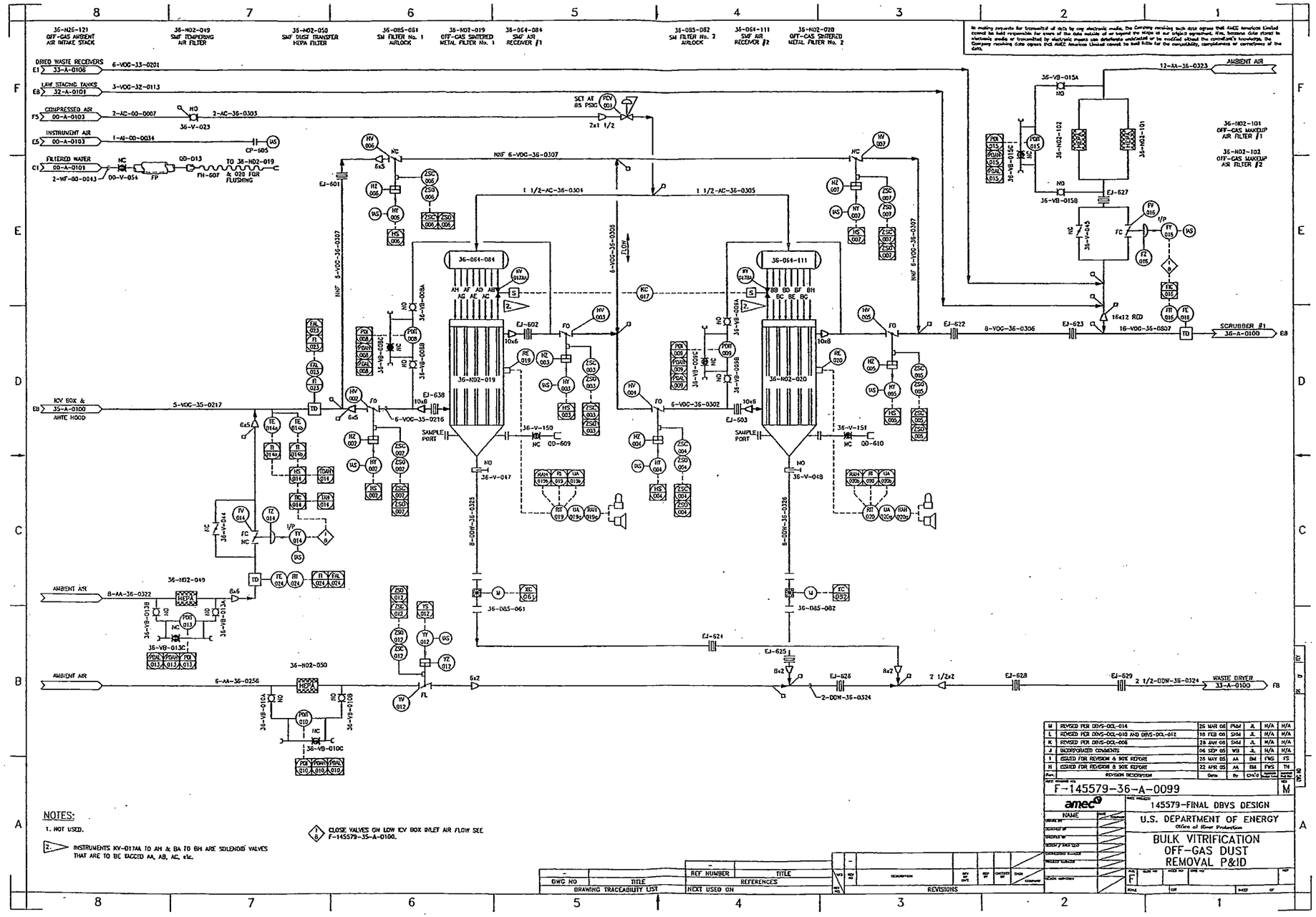
36-N26-121 OFF-GAS AMBIENT AIR INTAKE STACK
36-N02-049 SMF TEMPERING AIR FILTER
36-N02-050 SMF DUST TRANSFER HEPA FILTER
36-D85-061 SM FILTER No. 1 AIRLOCK
36-N02-019 OFF-GAS SINTERED METAL FILTER No. 1
36-D64-084 SMF AIR RECEIVER #1
36-D85-082 SM FILTER No. 2 AIRLOCK
36-D64-111 SMF AIR RECEIVER #2
36-N02-020 OFF-GAS SINTERED METAL FILTER No. 2
DRIED WASTE RECEIVERS 33-A-0106
LAW STAGING TANKS 32-A-0101
COMPRESSED AIR 00-A-0103
INSTRUMENT AIR 00-A-0103
FILTERED WATER 00-A-0101
KCV BOX & AWTE HOOD 35-A-0100
AMBIENT AIR
36-N02-101 OFF-GAS MAKEUP AIR FILTER #1
36-N02-102 OFF-GAS MAKEUP AIR FILTER #2
SCRUBBER #1 36-A-0100
WASTE DRYER 33-A-0100
NOTES:
1. NOT USED.
2. INSTRUMENTS KV-017AA TO AH & BA TO BH ARE SOLENOID VALVES THAT ARE TO BE TAGGED AA, AB, AC, etc.
CLOSE VALVES ON LOW KCV BOX INLET AIR FLOW SEE F-145579-35-A-0100.
F-145579-36-A-0099
145579-FINAL DBVS DESIGN
U.S. DEPARTMENT OF ENERGY
BULK VITRIFICATION OFF-GAS DUST REMOVAL P&ID
DRAWING TRACEABILITY LIST
REVISIONS

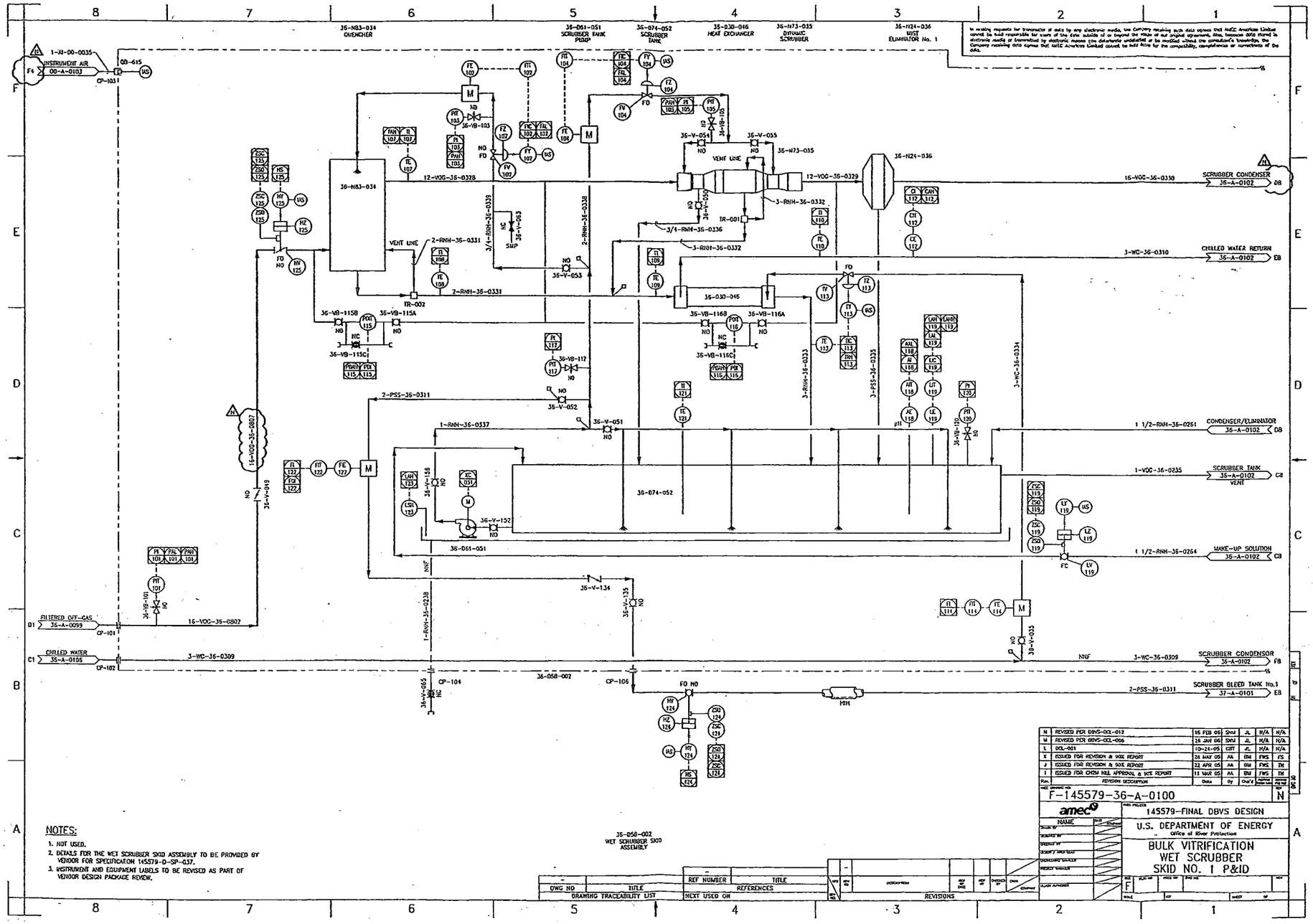
36-N83-034 QUENCHER
36-D61-051 SCRUBBER TANK PUMP
36-G74-052 SCRUBBER TANK
36-D30-046 HEAT EXCHANGER
36-N73-035 DYNAMIC SCRUBBER
36-N24-036 MIST ELIMINATOR No. 1
1-AN-00-0035 INSTRUMENT AIR 00-A-0103
SCRUBBER CONDENSER 36-A-0102
CHILLED WATER RETURN 36-A-0102
CONDENSER/ELIMINATOR 36-A-0102
SCRUBBER TANK 36-A-0102 VENT
MAKE-UP SOLUTION 36-A-0102
FILTERED OFF-GAS 36-A-0099
CHILLED WATER 36-A-0105
SCRUBBER CONDENSOR 36-A-0102
SCRUBBER BLEED TANK No.1 37-A-0101
36-D58-002 WET SCRUBBER SKID ASSEMBLY
NOTES:
1. NOT USED.
2. DETAILS FOR THE WET SCRUBBER SKID ASSEMBLY TO BE PROVIDED BY VENDOR FOR SPECIFICATION 145579-D-SP-037.
3. INSTRUMENT AND EQUIPMENT LABELS TO BE REVISED AS PART OF VENDOR DESIGN PACKAGE REVIEW.
F-145579-36-A-0100
145579-FINAL DBVS DESIGN
U.S. DEPARTMENT OF ENERGY
Office of River Protection
BULK VITRIFICATION WET SCRUBBER SKID NO. 1 P&ID
DRAWING TRACEABILITY LIST
REVISIONS

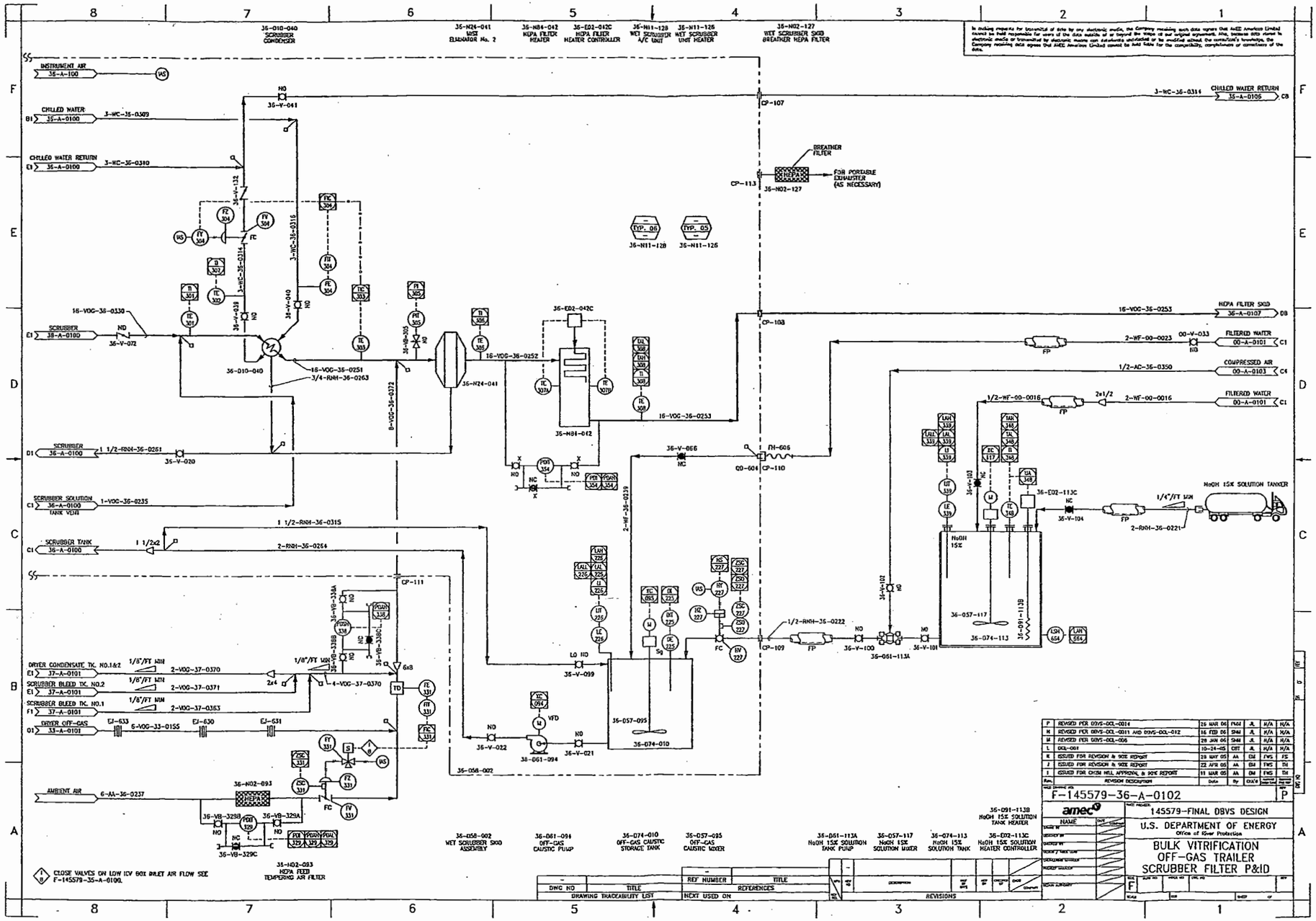
36-010-040 SCRUBBER CONDENSER
36-N24-041 MIST ELIMINATOR No. 2
36-N84-042 HEPA FILTER HEATER
36-E02-042C HEPA FILTER HEATER CONTROLLER
36-N11-128 WET SCRUBBER A/C UNIT
36-N11-126 WET SCRUBBER UNIT HEATER
36-N02-127 WET SCRUBBER SKID BREATHER HEPA FILTER
INSTRUMENT AIR 36-A-100
CHILLED WATER 36-A-0100
CHILLED WATER RETURN 36-A-0100
CHILLED WATER RETURN 36-A-0106
SCRUBBER 36-A-0100
SCRUBBER 36-A-0100
SCRUBBER 36-A-0100
SCRUBBER SOLUTION 36-A-0100 TANK VENT
SCRUBBER TANK 36-A-0100
DRYER CONDENSATE TK. NO.1&2 37-A-0101
SCRUBBER BLEED TK. NO.2 37-A-0101
SCRUBBER BLEED TK. NO.1 37-A-0101
DRYER OFF-GAS 33-A-0101
AMBIENT AIR
BREATHER FILTER
FOR PORTABLE EXHAUSTER (AS NECESSARY)
HEPA FILTER SKID 36-A-0107
FILTERED WATER 00-A-0101
COMPRESSED AIR 00-A-0103
FILTERED WATER 00-A-0101
NaOH 15% SOLUTION TANKER
36-N02-093 HEPA FEED TEMPERING AIR FILTER
CLOSE VALVES ON LOW ICV BOX INLET AIR FLOW SEE F-145579-35-A-0100
36-058-002 WET SCRUBBER SKID ASSEMBLY
36-061-094 OFF-GAS CAUSTIC PUMP
36-074-010 OFF-GAS CAUSTIC STORAGE TANK
36-057-095 OFF-GAS CAUSTIC MIXER
36-061-113A NaOH 15% SOLUTION TANK PUMP
36-057-117 NaOH 15% SOLUTION MIXER
36-074-113 NaOH 15% SOLUTION TANK
36-091-113B NaOH 15% SOLUTION TANK HEATER
36-E02-113C NaOH 15% SOLUTION HEATER CONTROLLER
DRAWING TRACEABILITY LIST
REVISIONS
F-145579-36-A-0102
145579-FINAL DBVS DESIGN
U.S. DEPARTMENT OF ENERGY
Office of Rocky Protection
BULK VITRIFICATION OFF-GAS TRAILER SCRUBBER FILTER P&ID

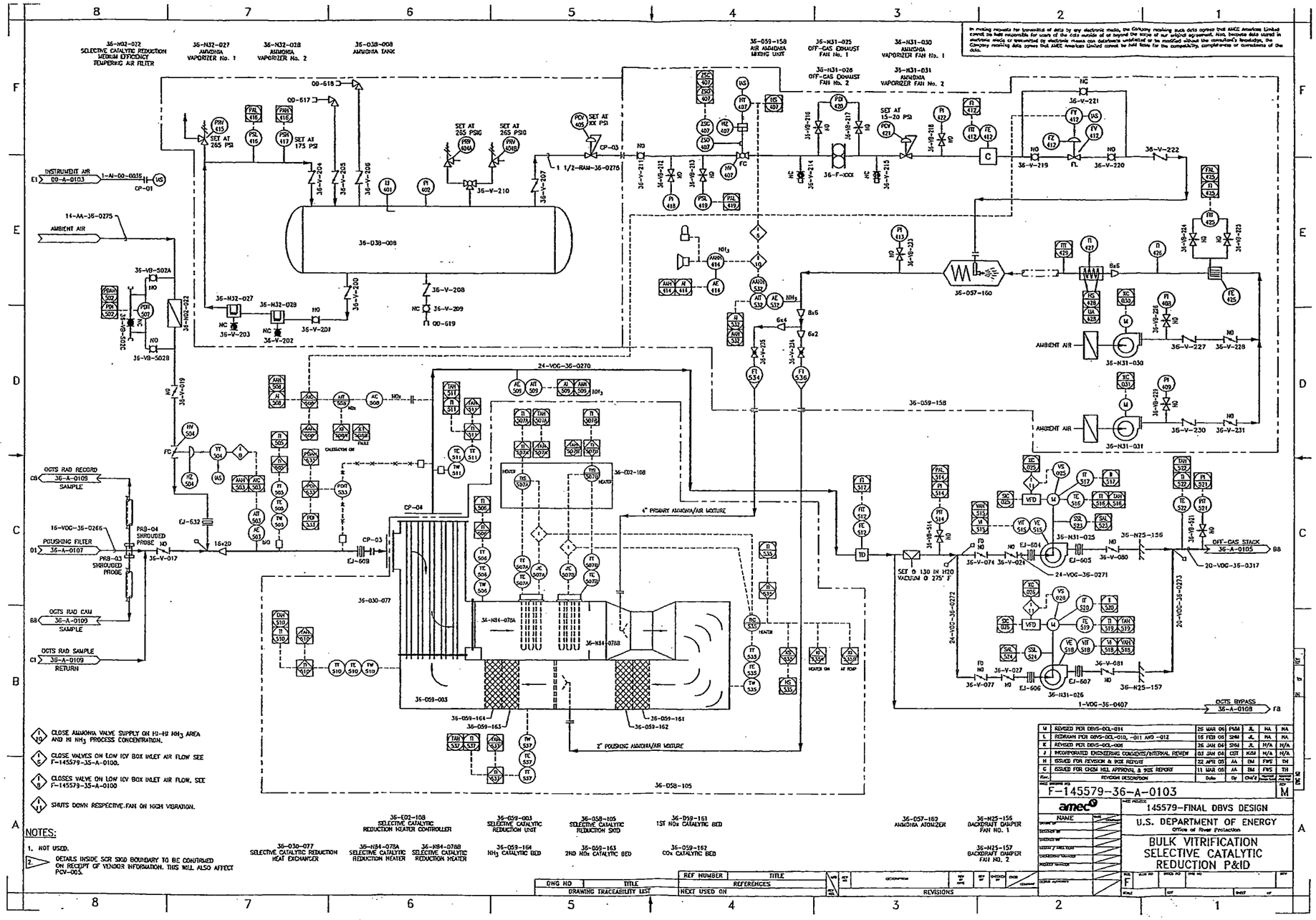
36-N32-012
SELECTIVE CATALYTIC REDUCTION MEDIUM EFFICIENCY TEMPERING AIR FILTER
36-N32-027
AMMONIA VAPORIZER No. 1
36-N32-028
AMMONIA VAPORIZER No. 2
36-038-008
AMMONIA TANK
36-059-158
AIR AMMONIA MIXING UNIT
36-N31-025
OFF-GAS EXHAUST FAN No. 1
36-N31-026
OFF-GAS EXHAUST FAN No. 2
36-N31-030
AMMONIA VAPORIZER FAN No. 1
36-N31-031
AMMONIA VAPORIZER FAN No. 2
INSTRUMENT AIR
AMBIENT AIR
OGTS RAD RECORD
POUSHING FILTER
OGTS RAD CAN
OGTS RAD SAMPLE
OFF-GAS STACK
OGTS BYPASS
36-057-160
AMMONIA ATOMIZER
36-N25-156
BACKDRAFT DAMPER FAN NO. 1
36-N25-157
BACKDRAFT DAMPER FAN NO. 2
36-030-077
SELECTIVE CATALYTIC REDUCTION HEAT EXCHANGER
36-E02-108
SELECTIVE CATALYTIC REDUCTION HEATER CONTROLLER
36-N34-078A
SELECTIVE CATALYTIC REDUCTION HEATER
36-N34-078B
SELECTIVE CATALYTIC REDUCTION HEATER
36-059-003
SELECTIVE CATALYTIC REDUCTION UNIT
36-059-164
NH3 CATALYTIC BED
36-058-105
SELECTIVE CATALYTIC REDUCTION SKID
36-059-163
2ND NOx CATALYTIC BED
36-059-161
1ST NOx CATALYTIC BED
36-059-162
COx CATALYTIC BED
CLOSE AMMONIA VALVE SUPPLY ON H2-N2 NH3 AREA AND IN NH3 PROCESS CONCENTRATION.
CLOSE VALVES ON LOW ICV BOX INLET AIR FLOW SEE F-145579-35-A-0100.
CLOSES VALVE ON LOW ICV BOX INLET AIR FLOW. SEE F-145579-35-A-0100
SHUTS DOWN RESPECTIVE FAN ON HIGH VIBRATION.
NOTES:
1. NOT USED.
2. DETAILS INSIDE SCR SKID BOUNDARY TO BE CONFIRMED ON RECEIPT OF VENDOR INFORMATION. THIS WILL ALSO AFFECT PCV-005.
F-145579-36-A-0103
145579-FINAL DBVS DESIGN
U.S. DEPARTMENT OF ENERGY
Office of Power Production
BULK VITRIFICATION SELECTIVE CATALYTIC REDUCTION P&ID
DRAWING TRACEABILITY LIST
REFERENCES
REVISIONS

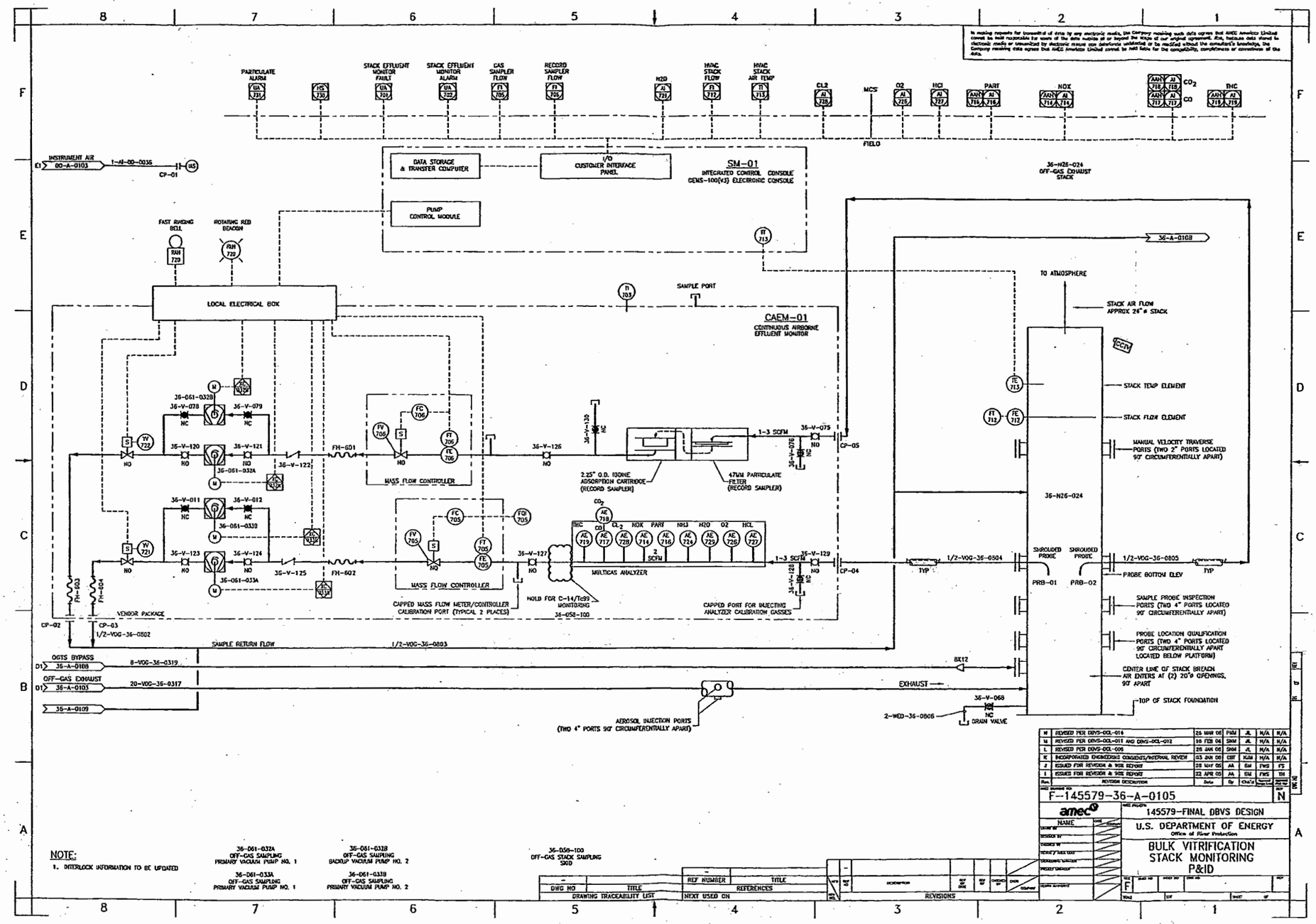
PARTICULATE ALARM
STACK EFFLUENT MONITOR FAULT
STACK EFFLUENT MONITOR ALARM
GAS SAMPLER FLOW
RECORD SAMPLER FLOW
H2O
HVAC STACK FLOW
HVAC STACK AIR TEMP
CL2
MCS
O2
HCL
PART
NOX
CO2
CO
THC
FIELD
INSTRUMENT AIR
00-A-0103
1-N-00-0036
CP-01
DATA STORAGE & TRANSFER COMPUTER
I/O CUSTOMER INTERFACE PANEL
SM-01
INTEGRATED CONTROL CONSOLE
GENS-100(V3) ELECTRONIC CONSOLE
PUMP CONTROL MODULE
36-N26-024
OFF-GAS EXHAUST STACK
FAST RINGING BELL
ROTATING RED BEACON
LOCAL ELECTRICAL BOX
SAMPLE PORT
CAEM-01
CONTINUOUS AIRBORNE EFFLUENT MONITOR
36-A-0108
TO ATMOSPHERE
STACK AIR FLOW APPROX 24" ø STACK
STACK TEMP ELEMENT
STACK FLOW ELEMENT
MANUAL VELOCITY TRAVERSE PORTS (TWO 2" PORTS LOCATED 90° CIRCUMFERENTIALLY APART)
36-V-078
36-V-079
36-V-120
36-V-121
36-V-122
36-V-123
36-V-124
36-V-125
36-V-011
36-V-012
36-V-126
36-V-127
36-V-130
36-V-075
36-V-076
36-V-129
36-V-128
36-V-068
FH-601
FH-602
FH-603
FH-604
MASS FLOW CONTROLLER
2.25" O.D. IODINE ADSORPTION CARTRIDGE (RECORD SAMPLER)
47MM PARTICULATE FILTER (RECORD SAMPLER)
1-3 SCFM
2 SCFM
MULTICAS ANALYZER
HOLD FOR C-14/Tc99 MONITORING
36-058-100
CAPPED MASS FLOW METER/CONTROLLER CALIBRATION PORT (TYPICAL 2 PLACES)
CAPPED PORT FOR INJECTING ANALYZER CALIBRATION GASSES
VENDOR PACKAGE
CP-02
CP-03
CP-04
CP-05
1/2-VOG-36-0502
SAMPLE RETURN FLOW
1/2-VOG-36-0803
1/2-VOG-36-0804
1/2-VOG-36-0805
SHROUDED PROBE
PRB-01
PRB-02
PROBE BOTTOM ELEV
SAMPLE PROBE INSPECTION PORTS (TWO 4" PORTS LOCATED 90° CIRCUMFERENTIALLY APART)
PROBE LOCATION QUALIFICATION PORTS (TWO 4" PORTS LOCATED 90° CIRCUMFERENTIALLY APART LOCATED BELOW PLATFORM)
CENTER LINE OF STACK BREACH AIR ENTERS AT (2) 20"ø OPENINGS, 90° APART
TOP OF STACK FOUNDATION
OGTS BYPASS
36-A-0108
8-VOG-36-0319
OFF-GAS EXHAUST
36-A-0103
20-VOG-36-0317
36-A-0109
EXHAUST
2-WED-36-0806
DRAIN VALVE
AEROSOL INJECTION PORTS (TWO 4" PORTS 90° CIRCUMFERENTIALLY APART)
NOTE:
1. INTERLOCK INFORMATION TO BE UPDATED
36-061-032A OFF-GAS SAMPLING PRIMARY VACUUM PUMP NO. 1
36-061-033A OFF-GAS SAMPLING PRIMARY VACUUM PUMP NO. 1
36-061-032B OFF-GAS SAMPLING BACKUP VACUUM PUMP NO. 2
36-061-033B OFF-GAS SAMPLING PRIMARY VACUUM PUMP NO. 2
36-058-100 OFF-GAS STACK SAMPLING SKID
DRAWING TRACEABILITY LIST
REFERENCES
REVISIONS
F-145579-36-A-0105
N
amec
145579-FINAL DBVS DESIGN
U.S. DEPARTMENT OF ENERGY
Office of River Protection
BULK VITRIFICATION STACK MONITORING P&ID

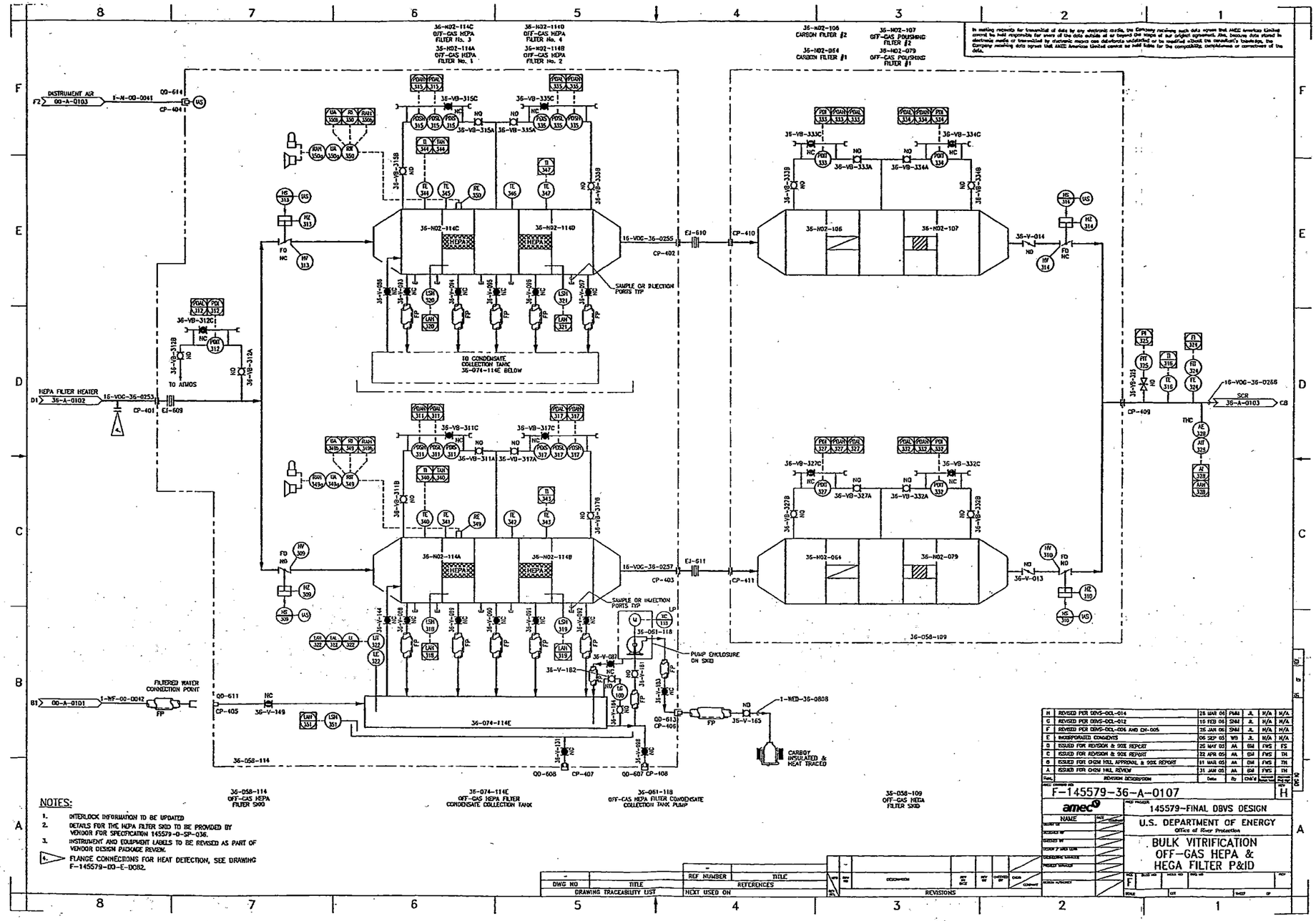
36-N02-114C OFF-GAS HEPA FILTER No. 3
36-N02-114D OFF-GAS HEPA FILTER No. 4
36-N02-114A OFF-GAS HEPA FILTER No. 1
36-N02-114B OFF-GAS HEPA FILTER No. 2
36-N02-106 CARBON FILTER #2
36-N02-064 CARBON FILTER #1
36-N02-107 OFF-GAS POLISHING FILTER #2
36-N02-079 OFF-GAS POLISHING FILTER #1
INSTRUMENT AIR
HEPA FILTER HEATER
TO ATMOS
TO CONDENSATE COLLECTION TANK 36-074-114E BELOW
SAMPLE OR INJECTION PORTS TYP
PUMP ENCLOSURE ON SKID
FILTERED WATER CONNECTION POINT
CARBOY INSULATED & HEAT TRACED
36-058-114
36-074-114E
36-058-109
36-V-014
36-V-013
36-V-165
36-V-149
36-V-182
SCR
36-A-0103
NOTES:
1. INTERLOCK INFORMATION TO BE UPDATED
2. DETAILS FOR THE HEPA FILTER SKID TO BE PROVIDED BY VENDOR FOR SPECIFICATION 145579-0-SP-036.
3. INSTRUMENT AND EQUIPMENT LABELS TO BE REVISED AS PART OF VENDOR DESIGN PACKAGE REVIEW.
4. FLANGE CONNECTIONS FOR HEAT DETECTION, SEE DRAWING F-145579-00-E-0082.
36-058-114 OFF-GAS HEPA FILTER SKID
36-074-114E OFF-GAS HEPA FILTER CONDENSATE COLLECTION TANK
36-061-118 OFF-GAS HEPA FILTER CONDENSATE COLLECTION TANK PUMP
36-058-109 OFF-GAS HEGA FILTER SKID
DRAWING TRACEABILITY LIST
REVISIONS
F-145579-36-A-0107
amec
145579-FINAL DBVS DESIGN
U.S. DEPARTMENT OF ENERGY
Office of River Protection
BULK VITRIFICATION OFF-GAS HEPA & HEGA FILTER P&ID

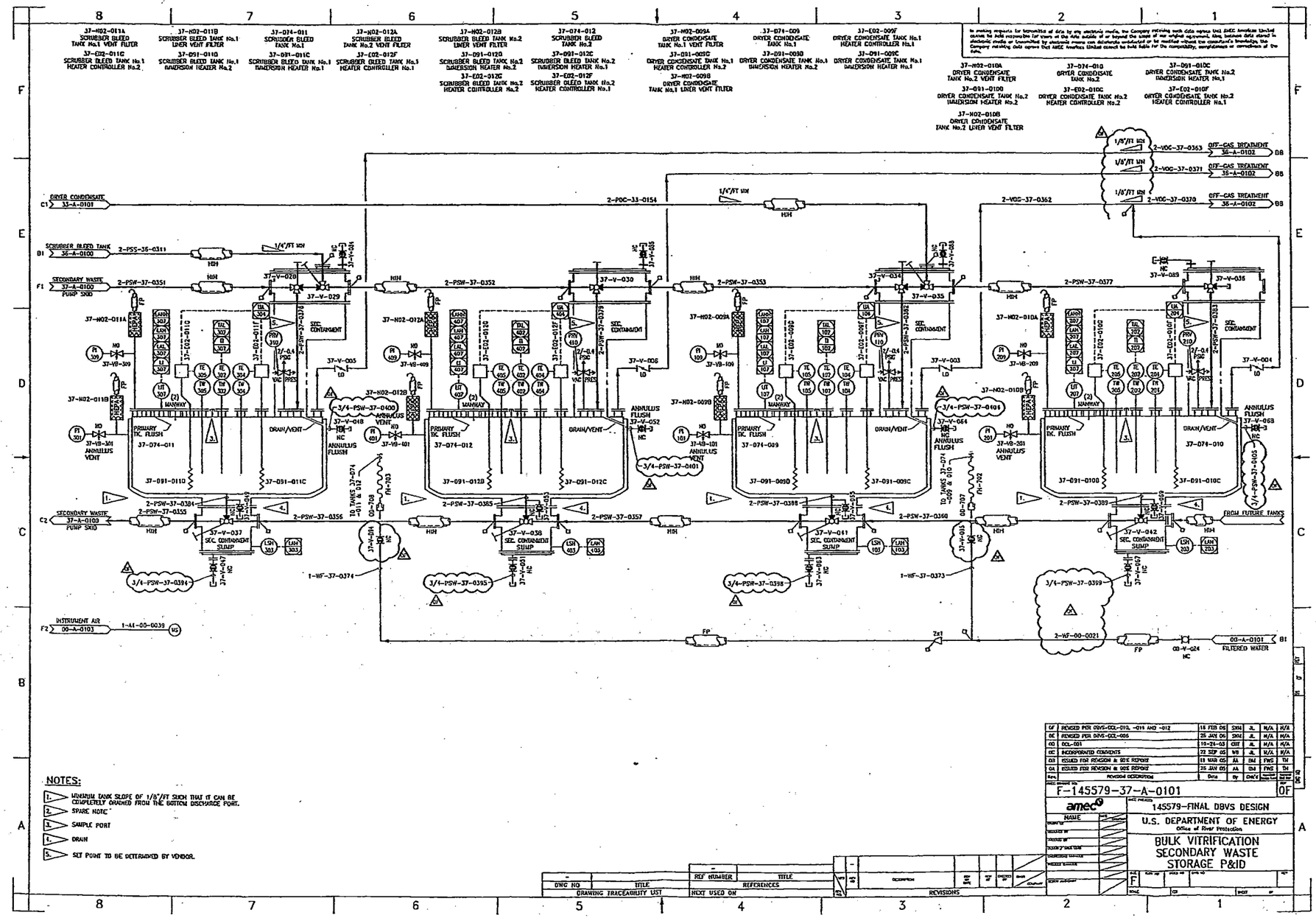
DRYER CONDENSATE
SCRUBBER BLEED TANK
SECONDARY WASTE
INSTRUMENT AIR
OFF-GAS TREATMENT
FILTERED WATER
FROM FUTURE TANKS
PRIMARY DC FLUSH
DRAIN/VENT
ANNULUS FLUSH
ANNULUS VENT
SEC. CONTAINMENT SUMP
NOTES:
1. MINIMUM TANK SLOPE OF 1/8"/FT SUCH THAT IT CAN BE COMPLETELY DRAINED FROM THE BOTTOM DISCHARGE PORT.
2. SPARE NOTE
3. SAMPLE PORT
4. DRAIN
5. SET POINT TO BE DETERMINED BY VENDOR.
F-145579-37-A-0101
145579-FINAL DBVS DESIGN
U.S. DEPARTMENT OF ENERGY
Office of River Protection
BULK VITRIFICATION SECONDARY WASTE STORAGE P&ID
DRAWING TRACEABILITY LIST
REVISIONS

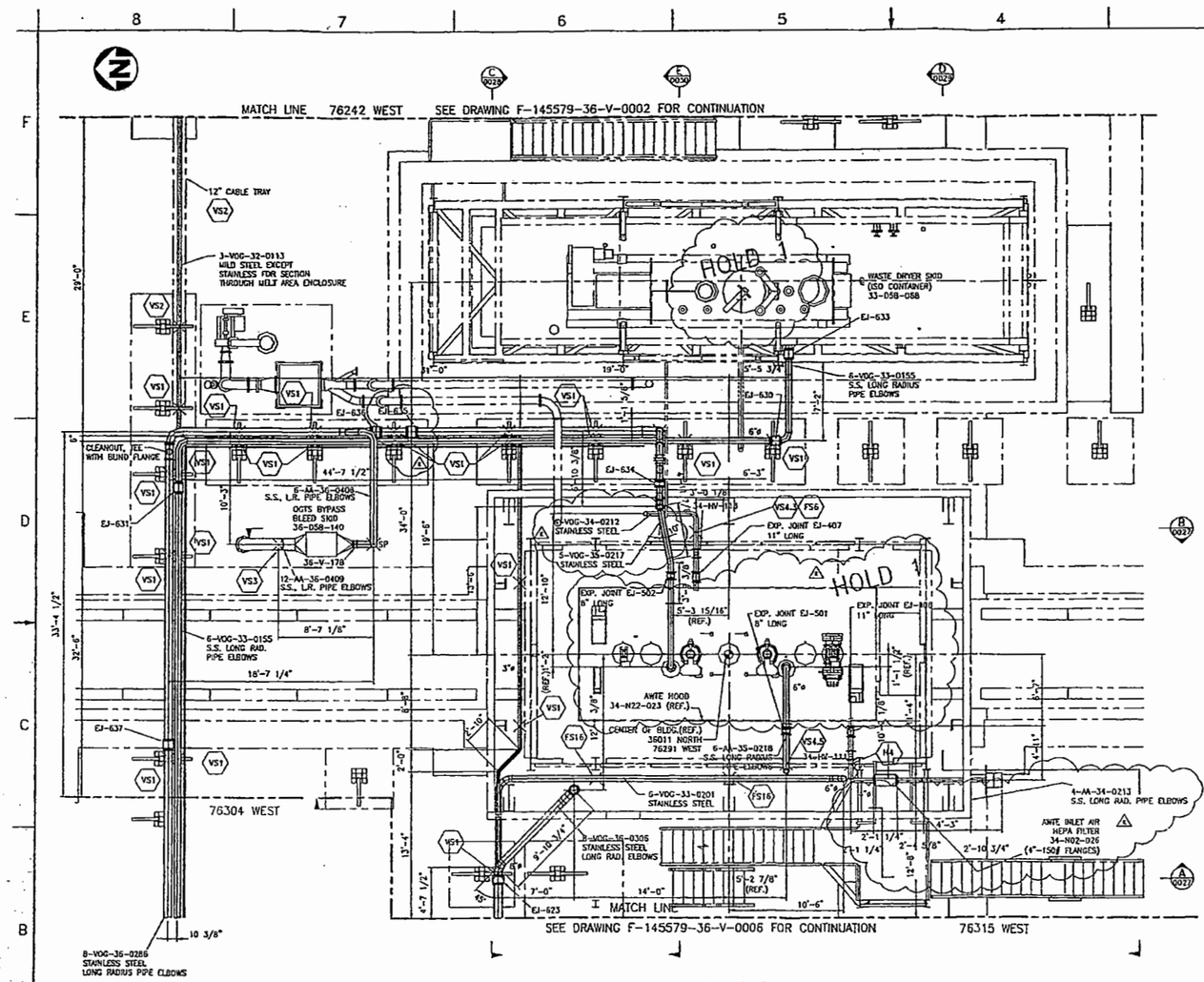

PLAN @ 675'-0"

In making requests for transmittal of data by any electronic media, the Company receiving such data agrees that AMEC Americas Limited cannot be held responsible for errors of the data outside of or beyond the scope of our original requirement. Also, because data stored in electronic media or transmitted by electronic means can deteriorate undetected or be modified without the consultant's knowledge, the Company receiving data agrees that AMEC Americas Limited cannot be held liable for the compatibility, completeness or correctness of the data.

No.	AMEC Dwg. No.	REFERENCE DRAWINGS
1	F-145579-00-D-0041	MELT AREA G.A. ELEVATIONS NORTH AND WEST
2	F-145579-00-D-0051	MELT AREA G.A. PLAN VIEWS
3	F-145579-36-V-0004	OFF-GAS TREATMENT MELT & DRYER MIDDLE PLAN
4	F-145579-36-V-0005	OFF-GAS TREATMENT MELT & DRYER UPPER PLANS
5	F-145579-36-V-0027	OFF-GAS TREATMENT MELT & DRYER SECTIONS A & B
6	F-145579-36-V-0028	OFF-GAS TREATMENT MELT & DRYER SECTION C
7	F-145579-36-V-0029	OFF-GAS TREATMENT MELT & DRYER SECTION D
8	F-145579-36-V-0030	OFF-GAS TREATMENT MELT & DRYER SECTION E

NOTES:

1. ONLY VENTILATION DUCTWORK PIPING AND SUPPORTING CABLE TRAYS SHOWN. ALL OTHER PIPING AND CABLE TRAYS OMITTED FOR CLARITY.
2. DIMENSIONS AND LOCATIONS OF JOINTS TO BE CONFIRMED BY SELECTED VENDOR.
3. VENTILATION DUCTWORK PIPING TO BE MINIMUM THICKNESS SCHEDULE 40 COMPLETE WITH LONG RADIUS ELBOWS FOR 5" AND SMALLER AND SCHEDULE 10 PIPE AND PIPE FITTINGS FOR PIPE 8" AND LARGER EXCEPT AS NOTED.
4. DUCTWORK MATERIAL AND FABRICATION SHALL CONFORM TO ASME B31.1 POWER PIPING.
5. DUCTWORK FITTINGS AS PER AMEC DWG. NO. F-145579-36-V-0023 STANDARD DETAILS - SHT. 1.
6. I.D. DESIGNATES ISOLATION DAMPERS TO BE FLANGED ROUND BUBBLE-TIGHT (FLAT BLADE TYPE). FLANGES TO MATCH 150# DRILLING.
7. VENTILATION DUCTWORK SUPPORTS ARE REPRESENTED BY A HEXAGON.
   EXAMPLES - VS- OR RG- CG- CS- A- H- DS-
   FOR "VS" TYPE SUPPORTS SEE DWG. F-145579-36-0024.
   FOR ALL OTHER SUPPORTS SEE DRAWINGS F-145579-00-P-0001 TO -0004.
8. SEE BRANCH REINFORCEMENT DETAIL ON DWG. F-145579-36-V-0023 FOR FITTINGS SHOWN SHADED.

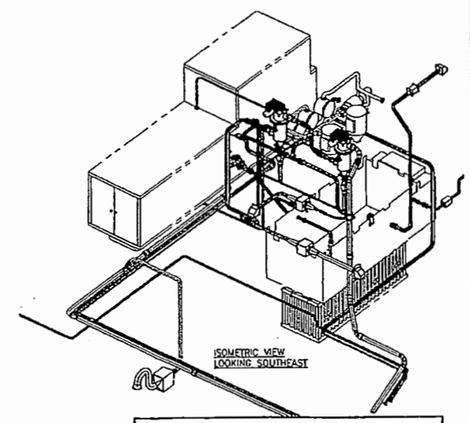

NOT APPROVED FOR CONSTRUCTION

ISSUES: K
1. PENDING VENDOR INFORMATION.

Rev.	REVISION DESCRIPTION	Date	By	Chk'd	Approved	Rev. Appr.	Issue Code
K	RE-ISSUED FOR DOTS DESIGN REPORT	25 MAR 06	TMS	JM	JL	JSG	
J	ISSUED FOR DOTS DESIGN REPORT	24 FEB 06	RRB	JM	SRB	JSG	
H	ISSUED FOR DESIGN	18/12/05	RRB		FWS	JDS	
G	ISSUED FOR INFORMATION - OFF-GAS SYSTEM REVISED	14/11/05	RRB		FWS	JDS	
F	REISSUED FOR CHOW HILL REVIEW/WOE REPORT(AREA 36 ONLY)	26/04/05	JCH	PCF	FWS	SC	
E	ISSUED FOR CHOW HILL REVIEW/WOE REPORT (AREA 36 ONLY)	15/03/05	JCH	PCF	FWS	TH	
D	ISSUED FOR CHOW HILL REVIEW/WOE REPORT (ICV SYSTEM)	02/03/05	JCH	PCF	GJ	TH	
C	ISSUED FOR CHOW HILL REVIEW/WOE REPORT (AREA 33 ONLY)	31/01/05	RDD	PCF	FWS	TH	
B	ISSUED FOR INTERNAL APPROVAL	17/12/04	JCH	AP	FWS	TH	
A	ISSUED FOR REVIEW	05/11/04	JCH	AP	FWS	TH	

AMEC DRAWING NO: F-145579-36-V-0003 — K

amec

AMEC PROJECT: 145579-FINAL DBVS DESIGN

U.S. DEPARTMENT OF ENERGY
Office of River Protection

BULK VITRIFICATION
OFF-GAS TREATMENT
MELT & DRYER LOWER PLAN

NAME	DATE
DRAWN BY JCH	
DESIGNED BY	
CHECKED BY	
PROJECT ENGINEER	
DISCIPLINE MANAGER	
PROJECT MANAGER	
DESIGN AUTHORITY	

SIZE F — SCALE 1/4"=1'-0" — SHEET — OF

DWG NO	TITLE
DRAWING TRACEABILITY LIST	

REF NUMBER	TITLE
REFERENCES	
NEXT USED ON	

REV NO	DESCRIPTION	REF BY DATE	REF BY	CHECKED BY	DATE COMPLETE
REVISIONS					

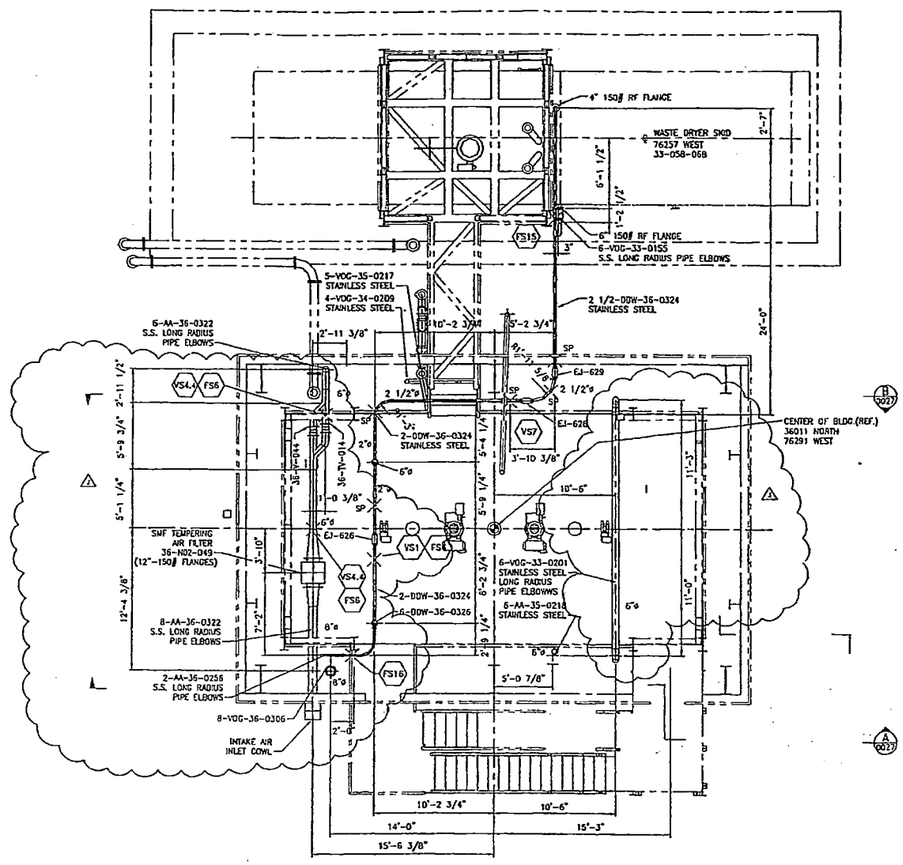

PLAN @ EL. 686'-0"

No	AMEC Dwg. No.	REFERENCE DRAWINGS
1	F-145579-00-D-0041	MELT AREA G.A. ELEVATIONS NORTH AND WEST
2	F-145579-00-D-0051	MELT AREA G.A. PLAN VIEWS
3	F-145579-36-V-0003	OFF-GAS TREATMENT MELT & DRYER LOWER PLAN
4	F-145579-36-V-0005	OFF-GAS TREATMENT MELT & DRYER UPPER PLANS
5	F-145579-36-V-0027	OFF-GAS TREATMENT MELT & DRYER SECTIONS A & B
6	F-145579-36-V-0028	OFF-GAS TREATMENT MELT & DRYER SECTION C
7	F-145579-36-V-0029	OFF-GAS TREATMENT MELT & DRYER SECTION D
8	F-145579-36-V-0030	OFF-GAS TREATMENT MELT & DRYER SECTION E

NOTES:

1. ONLY VENTILATION DUCTWORK PIPING AND SUPPORTING CABLE TRAYS SHOWN. ALL OTHER PIPING AND CABLE TRAYS OMITTED FOR CLARITY.
2. DIMENSIONS AND LOCATIONS OF JOINTS TO BE CONFIRMED BY SELECTED VENDOR.
3. VENTILATION DUCTWORK PIPING TO BE MINIMUM THICKNESS SCHEDULE 40 COMPLETE WITH LONG RADIUS ELBOWS FOR 6" AND SMALLER AND SCHEDULE 10 PIPE AND PIPE FITTINGS FOR PIPE 8" AND LARGER EXCEPT AS NOTED.
4. DUCTWORK MATERIAL AND FABRICATION SHALL CONFORM TO ASME B31.1 POWER PIPING.
5. DUCTWORK FITTINGS AS PER AMEC DWG. NO. F-145579-36-V-0023 STANDARD DETAILS - SHT. 1.
6. I.D. DESIGNATES ISOLATION DAMPERS TO BE FLANGERS ROUND BUBBLE-TIGHT (FLAT BLADE TYPE). FLANGES TO MATCH 150# DRILLING.
7. VENTILATION DUCTWORK SUPPORTS ARE REPRESENTED BY A HEXAGON.
   EXAMPLES - VS- OR RG- CG- CS- A- H- DS-
   FOR 'VS' TYPE SUPPORTS SEE DWG. F-145579-36-0024.
   FOR ALL OTHER SUPPORTS SEE DRAWINGS F-145579-00-P-0003 TO -0004.
8. SEE BRANCH REINFORCEMENT DETAIL ON DWG. F-145579-36-V-0023 FOR FITTINGS SHOWN SHADED.

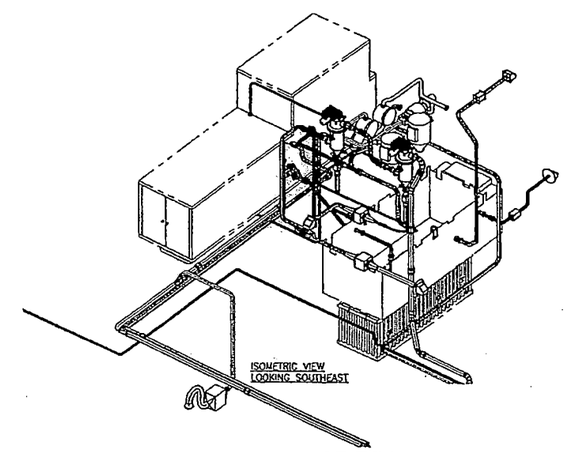

NOT APPROVED FOR CONSTRUCTION

REV	REVISION DESCRIPTION	Date	By	Chk'd	Appr'd	Proj Eng
J	ISSUED FOR CHDM REVIEW/ REPORT (AREA 36 ONLY)	15 MAR 05	TKS	JM	JL	JSG
H	ISSUED FOR OCFS DESIGN REPORT	24 FEB 05	RRB	JM	SRB	JSG
G	ISSUED FOR DESIGN	18/12/05	RRB		TKS	JSG
F	REISSUED FOR CHDM HILL REVIEW/BOX REPORT (AREA 36 ONLY)	28/04/05	JCH	PDF	TKS	SG
E	ISSUED FOR CHDM HILL REVIEW/BOX REPORT - (AREA 36 ONLY)	15/03/05	JCH	PDF	TKS	TH
D	ISSUED FOR CHDM HILL REVIEW/BOX REPORT - (NW SYSTEM)	02/03/05	JCH	PDF	GJ	TH
C	ISSUED FOR CHDM HILL REVIEW/BOX REPORT - (AREA 33 ONLY)	31/01/05	JCH	PDF	TKS	TH
B	ISSUED FOR INTERNAL APPROVAL	17/12/04	JCH	AP	TKS	TH
A	ISSUED FOR REVIEW	03/11/04	JCH	AP	TKS	TH

AMEC PROJECT NO. F-145579-36-V-0004 REV. J

amec

145579-FINAL DBVS DESIGN

U.S. DEPARTMENT OF ENERGY
Office of River Protection

BULK VITRIFICATION
OFF-GAS TREATMENT
MELT & DRYER MIDDLE PLAN

SIZE F SCALE 1/4"=1'-0"

DWG NO	TITLE
-	

DRAWING TRACEABILITY LIST

REF NUMBER	TITLE
-	

REFERENCES

NEXT USED ON

REVISIONS

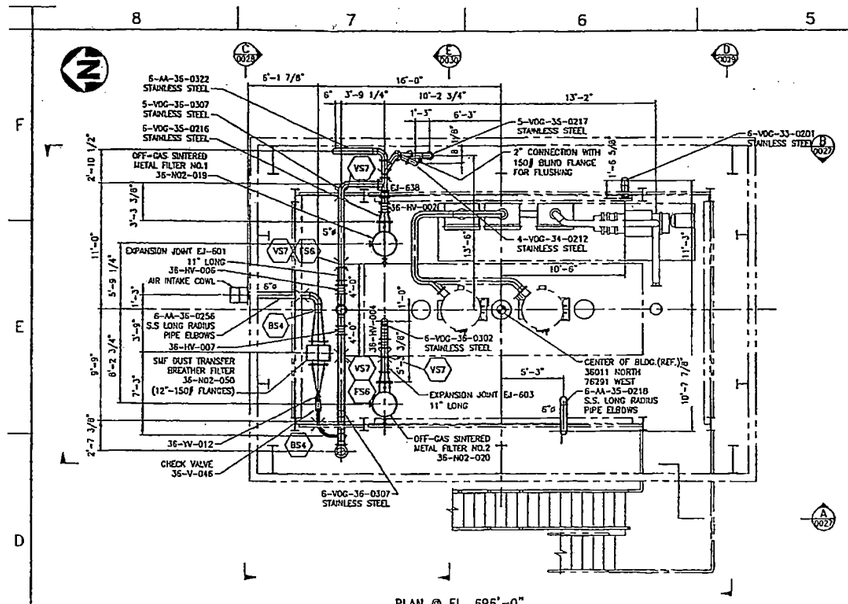

PLAN @ EL. 696'-0"

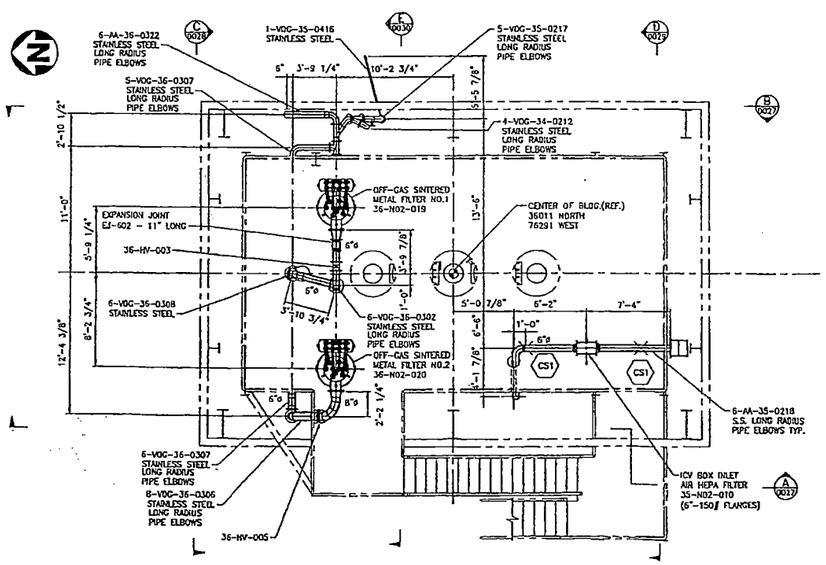

PLAN @ EL. 706'-0"

In making requests for transmittal of data by any electronic media, the Company requesting such data agrees that AMEC Americas Limited cannot be held responsible for users of the data outside of or beyond the scope of our original intended use, because data stored in electronic media or transmitted by electronic means can deteriorate undetected or be modified without the consultant's knowledge. The Company receiving data agrees that AMEC Americas Limited cannot be held liable for the compatibility, completeness or correctness of the data.

No.	AMEC Dwg. No.	REFERENCE DRAWINGS
1	F-145579-00-D-0041	MELT AREA G.A. ELEVATIONS NORTH AND WEST
2	F-145579-00-D-0051	MELT AREA G.A. PLAN VIEWS
3	F-145579-36-V-0003	OFF-GAS TREATMENT MELT & DRYER LOWER PLAN
4	F-145579-36-V-0004	OFF-GAS TREATMENT MELT & DRYER MIDDLE PLAN
5	F-145579-36-V-0027	OFF-GAS TREATMENT MELT & DRYER SECTIONS A & B
6	F-145579-36-V-0028	OFF-GAS TREATMENT MELT & DRYER SECTION C
7	F-145579-36-V-0029	OFF-GAS TREATMENT MELT & DRYER SECTION D
8	F-145579-36-V-0030	OFF-GAS TREATMENT MELT & DRYER SECTION E

NOTES:

1. ONLY VENTILATION DUCTWORK PIPING AND SUPPORTING CABLE TRAYS SHOWN. ALL OTHER PIPING AND CABLE TRAYS OMITTED FOR CLARITY.
2. DIMENSIONS AND LOCATIONS OF JOINTS TO BE CONFIRMED BY SELECTED VENDOR.
3. VENTILATION DUCTWORK PIPING TO BE MINIMUM THICKNESS SCHEDULE 40 COMPLETE WITH LONG RADIUS ELBOWS FOR 6" AND SMALLER AND SCHEDULE 10 PIPE AND PIPE FITTINGS FOR PIPE 8" AND LARGER EXCEPT AS NOTED.
4. DUCTWORK MATERIAL AND FABRICATION SHALL CONFORM TO ASME B31.1 POWER PIPING.
5. DUCTWORK FITTINGS AS PER AMEC DWG. NO. F-145579-36-V-0023 STANDARD DETAILS ~ SHT. 1.
6. I.D. DESIGNATES ISOLATION DAMPERS TO BE FLANDERS ROUND BUBBLE-TIGHT (FLAT BLADE TYPE). FLANGES TO MATCH 150# DRILLING.
7. VENTILATION DUCTWORK SUPPORTS ARE REPRESENTED BY A HEXAGON.
   EXAMPLES – VS- OR RG- CG- CS- A- H- DS-
   FOR 'VS' TYPE SUPPORTS SEE DWG. F-145579-35-0024.
   FOR ALL OTHER SUPPORTS SEE DRAWINGS F-145579-00-P-0001 TO -0004.
8. SEE BRANCH REINFORCEMENT DETAIL ON DWG. F-145579-36-V-0023 FOR FITTINGS SHOWN SHADED.

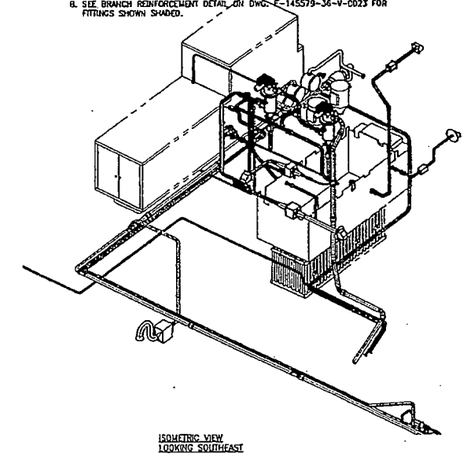

ISOMETRIC VIEW
LOOKING SOUTHEAST

NOT APPROVED FOR CONSTRUCTION

REV	REVISION DESCRIPTION	Date	By	Chk'd	Approved	Approved
H	ISSUED FOR CH2M REVIEW/ REPORT (AREA 36 ONLY)	25 MAR 06	SW	JN	A	JSC
G	ISSUED FOR CCS DESIGN REPORT	24 FEB 06	RRB	JN	SRB	JSC
F	ISSUED FOR DESIGN	16/12/05	RRB		FWS	JDS
E	REISSUED FOR CH2M HILL REVIEW/WDE REPORT (AREA 36 ONLY)	26/04/05	JCH	PCF	FWS	SC
D	ISSUED FOR CH2M HILL REVIEW/WDE REPORT (AREA 36 ONLY)	15/03/05	JCH	PCF	FWS	TH
C	ISSUED FOR CH2M HILL REVIEW/WDE REPORT (ICV SYSTEM)	02/03/05	JCH	PCF	GJ	TH
B	ISSUED FOR INTERNAL APPROVAL	17/12/04	JCH	AP	FWS	TH
A	ISSUED FOR REVIEW	06/11/04	JCH	AP	FWS	TH

AMEC DWG. NO. F-145579-36-V-0005 REV H

amec

PROJECT: 145579-FINAL DBVS DESIGN

U.S. DEPARTMENT OF ENERGY
Office of Waste Production

BULK VITRIFICATION
OFF-GAS TREATMENT
MELT & DRYER UPPER PLAN

SIZE F SCALE 1/4"=1'-0"

DWG NO	TITLE
DRAWING TRACEABILITY LIST	

REF NUMBER	TITLE
REFERENCES	
NEXT USED ON	

REVISIONS

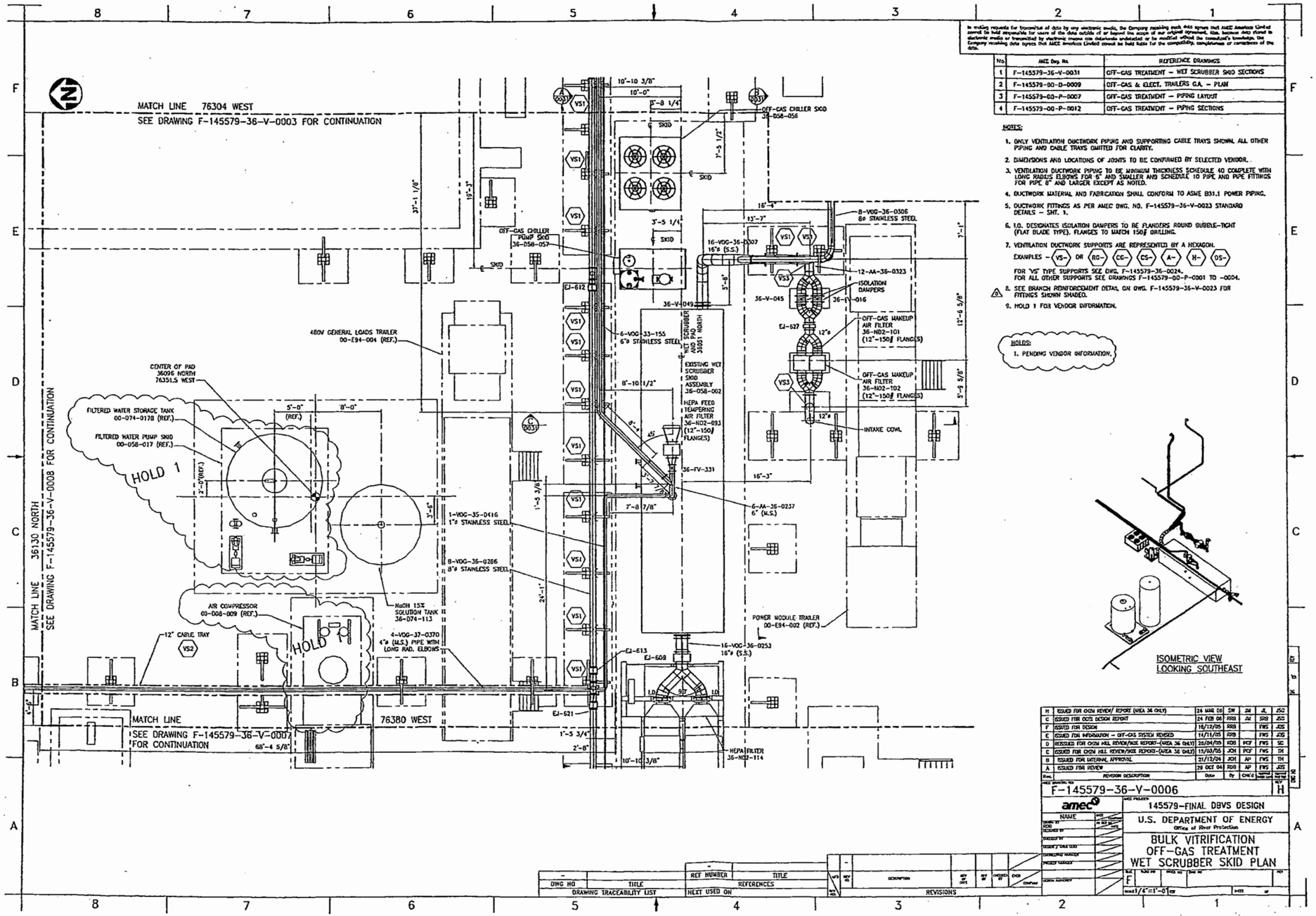

In making requests for transmittal of data by any electronic media, the Company requesting such data agrees that AMEC Americas Limited cannot be held responsible for users of the data outside of or beyond the scope of our original agreement, also, because data stored in electronic media or transmitted by electronic means can deteriorate undetected or be modified without the consultant's knowledge, the Company receiving data agrees that AMEC Americas Limited cannot be held liable for the compatibility, completeness or correctness of the data.

No	AMEC Dwg. No.	REFERENCE DRAWINGS
1	F-145579-36-V-0031	OFF-GAS TREATMENT – WET SCRUBBER SKID SECTIONS
2	F-145579-00-D-0009	OFF-GAS & ELECT. TRAILERS G.A. – PLAN
3	F-145579-00-P-0007	OFF-GAS TREATMENT – PIPING LAYOUT
4	F-145579-00-P-0012	OFF-GAS TREATMENT – PIPING SECTIONS

NOTES:

1. ONLY VENTILATION DUCTWORK PIPING AND SUPPORTING CABLE TRAYS SHOWN. ALL OTHER PIPING AND CABLE TRAYS OMITTED FOR CLARITY.
2. DIMENSIONS AND LOCATIONS OF JOINTS TO BE CONFIRMED BY SELECTED VENDOR.
3. VENTILATION DUCTWORK PIPING TO BE MINIMUM THICKNESS SCHEDULE 40 COMPLETE WITH LONG RADIUS ELBOWS FOR 6" AND SMALLER AND SCHEDULE 10 PIPE AND PIPE FITTINGS FOR PIPE 8" AND LARGER EXCEPT AS NOTED.
4. DUCTWORK MATERIAL AND FABRICATION SHALL CONFORM TO ASME B31.1 POWER PIPING.
5. DUCTWORK FITTINGS AS PER AMEC DWG. NO. F-145579-36-V-0023 STANDARD DETAILS – SHT. 1.
6. I.D. DESIGNATES ISOLATION DAMPERS TO BE FLANGED ROUND BUBBLE-TIGHT (FLAT BLADE TYPE). FLANGES TO MATCH 150# DRILLING.
7. VENTILATION DUCTWORK SUPPORTS ARE REPRESENTED BY A HEXAGON.
   EXAMPLES – VS- OR RG- CG- CS- A- H- DS-
   FOR "VS" TYPE SUPPORTS SEE DWG. F-145579-36-0024.
   FOR ALL OTHER SUPPORTS SEE DRAWINGS F-145579-00-P-0001 TO -0004.
8. SEE BRANCH REINFORCEMENT DETAIL ON DWG. F-145579-36-V-0023 FOR FITTINGS SHOWN SHADED.
9. HOLD 1 FOR VENDOR INFORMATION.

HOLDS:

1. PENDING VENDOR INFORMATION.

Rev.	REVISION DESCRIPTION	Date	By	Chk'd	Appr'd	Appr'd
H	ISSUED FOR CKCN REVIEW/ REPORT (AREA 36 ONLY)	24 MAR 06	SW	JM	JL	JGG
G	ISSUED FOR OCDS DESIGN REPORT	24 FEB 06	RRB	JM	GRB	JGG
F	ISSUED FOR DESIGN	16/12/05	RRB		FWS	JGG
E	ISSUED FOR INFORMATION – OFF-GAS SYSTEM REVISED	14/11/05	RRB		FWS	JGG
D	REISSUED FOR CKCN HLL REVIEW/KGE REPORT-(AREA 36 ONLY)	28/04/05	RRB	PCF	FWS	SC
C	ISSUED FOR CKCN HLL REVIEW/KGE REPORT-(AREA 36 ONLY)	15/03/05	JCH	PCF	FWS	TH
B	ISSUED FOR INTERNAL APPROVAL	21/12/04	JCH	AP	FWS	TH
A	ISSUED FOR REVIEW	29 OCT 04	RRB	AP	FWS	JGG

AMEC DWG NO. F-145579-36-V-0006 REV H

amec

AMEC PROJECT 145579-FINAL DBVS DESIGN

U.S. DEPARTMENT OF ENERGY
Office of River Protection

BULK VITRIFICATION
OFF-GAS TREATMENT
WET SCRUBBER SKID PLAN

SIZE F SCALE 1/4"=1'-0" SHEET OF

DWG NO	TITLE	REF NUMBER	TITLE
DRAWING TRACEABILITY LIST	REFERENCES	NEXT USED ON	

REV NO	DESCRIPTION	REV BY DATE	REV BY	CHECKED BY	CHCK	COMPANY
	REVISIONS					

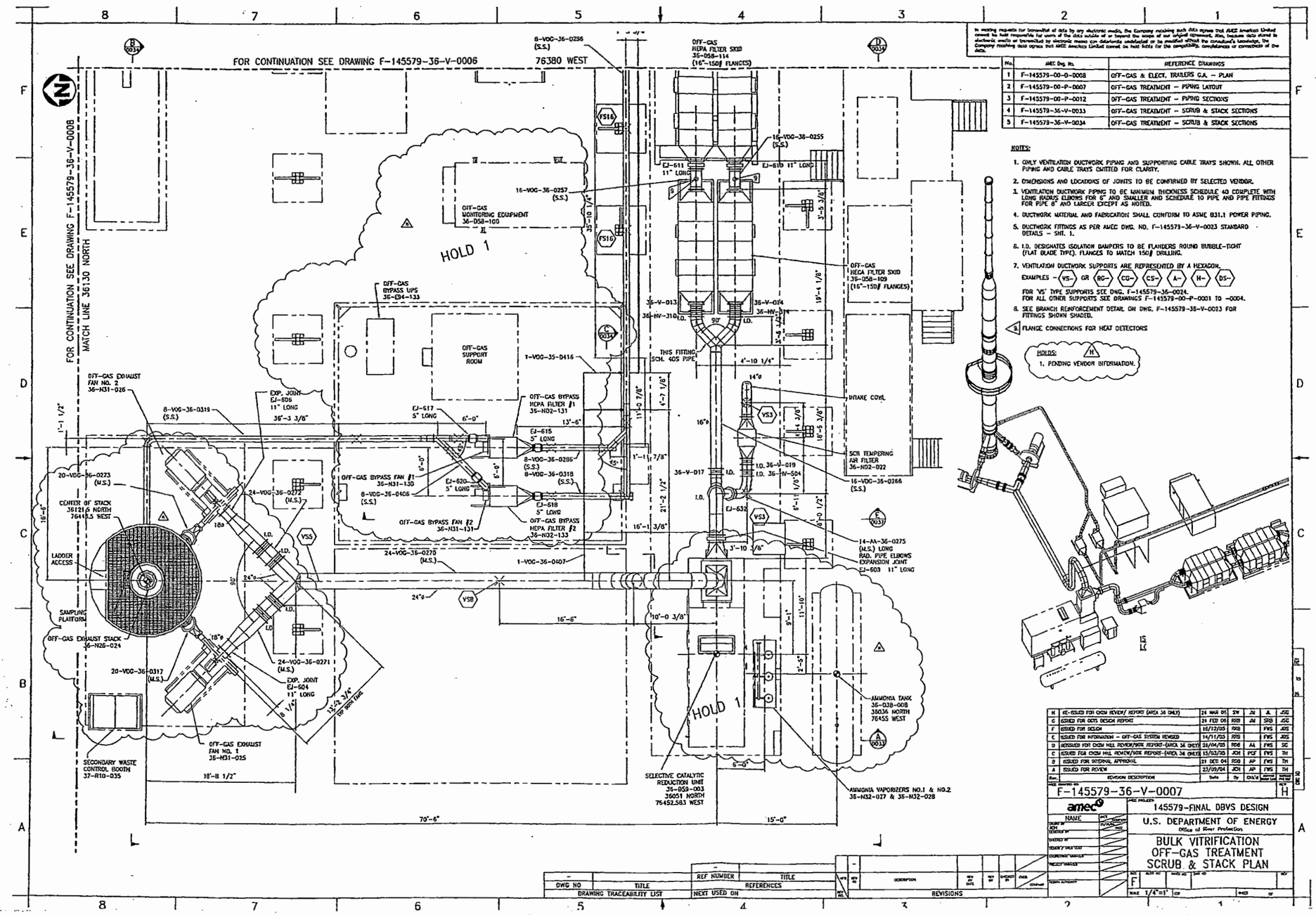

No.	AMEC Dwg. No.	REFERENCE DRAWINGS
1	F-145579-00-0-0008	OFF-GAS & ELECT. TRAILERS G.A. - PLAN
2	F-145579-00-P-0007	OFF-GAS TREATMENT - PIPING LAYOUT
3	F-145579-00-P-0012	OFF-GAS TREATMENT - PIPING SECTIONS
4	F-145579-36-V-0033	OFF-GAS TREATMENT - SCRUB & STACK SECTIONS
5	F-145579-36-V-0034	OFF-GAS TREATMENT - SCRUB & STACK SECTIONS

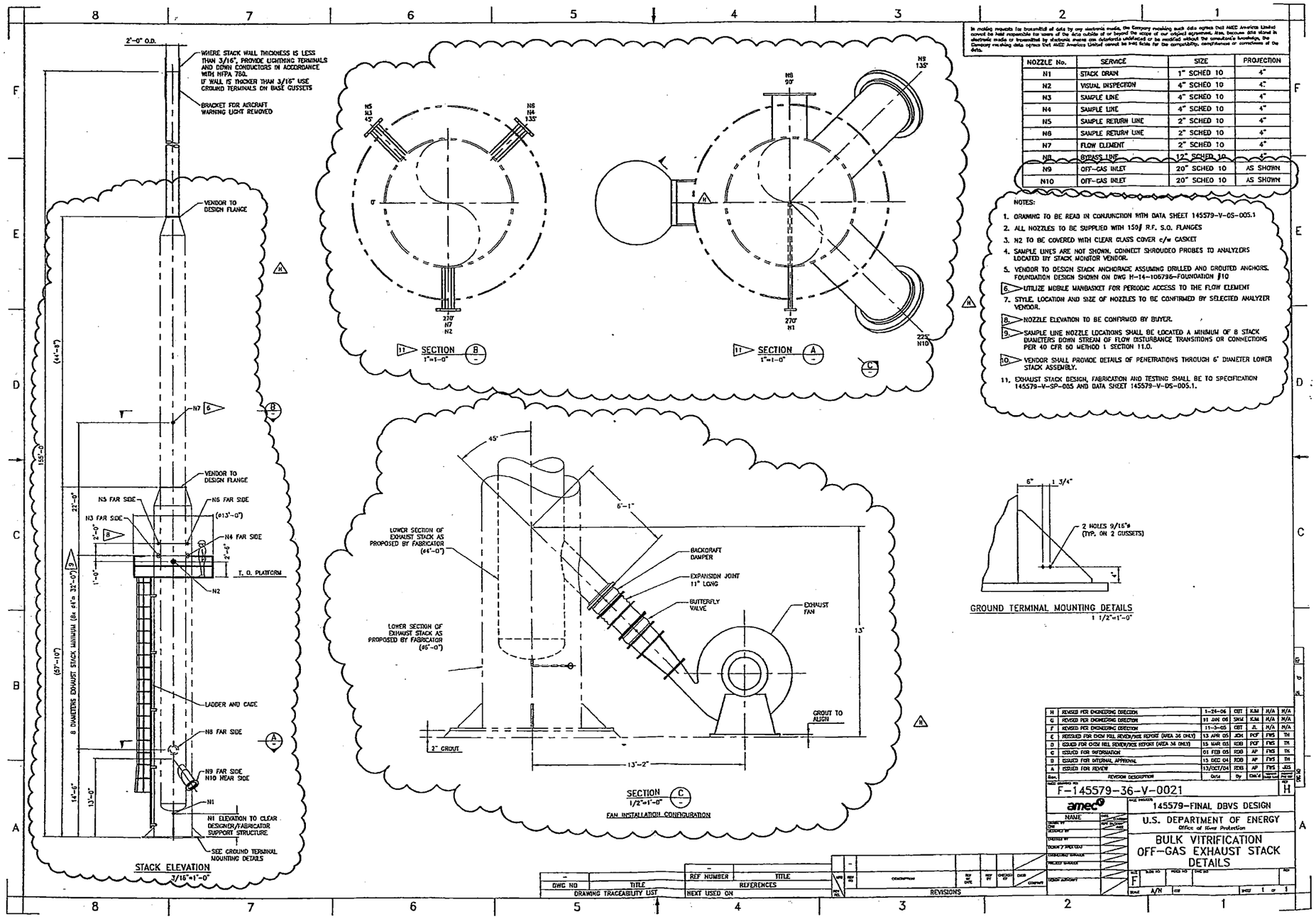

NOZZLE No.	SERVICE	SIZE	PROJECTION
N1	STACK DRAIN	1" SCHED 10	4"
N2	VISUAL INSPECTION	4" SCHED 10	4"
N3	SAMPLE LINE	4" SCHED 10	4"
N4	SAMPLE LINE	4" SCHED 10	4"
N5	SAMPLE RETURN LINE	2" SCHED 10	4"
N6	SAMPLE RETURN LINE	2" SCHED 10	4"
N7	FLOW ELEMENT	2" SCHED 10	4"
N8	BYPASS LINE	12" SCHED 10	4"
N9	OFF-GAS INLET	20" SCHED 10	AS SHOWN
N10	OFF-GAS INLET	20" SCHED 10	AS SHOWN

NOTES:

1. DRAWING TO BE READ IN CONJUNCTION WITH DATA SHEET 145579-V-DS-005.1
2. ALL NOZZLES TO BE SUPPLIED WITH 150# R.F. S.O. FLANGES
3. N2 TO BE COVERED WITH CLEAR GLASS COVER c/w GASKET
4. SAMPLE LINES ARE NOT SHOWN. CONNECT SHROUDED PROBES TO ANALYZERS LOCATED BY STACK MONITOR VENDOR.
5. VENDOR TO DESIGN STACK ANCHORAGE ASSUMING DRILLED AND GROUTED ANCHORS. FOUNDATION DESIGN SHOWN ON DWG H-14-106796-FOUNDATION #10
6. UTILIZE MOBILE MANBASKET FOR PERIODIC ACCESS TO THE FLOW ELEMENT
7. STYLE, LOCATION AND SIZE OF NOZZLES TO BE CONFIRMED BY SELECTED ANALYZER VENDOR.
8. NOZZLE ELEVATION TO BE CONFIRMED BY BUYER.
9. SAMPLE LINE NOZZLE LOCATIONS SHALL BE LOCATED A MINIMUM OF 8 STACK DIAMETERS DOWN STREAM OF FLOW DISTURBANCE TRANSITIONS OR CONNECTIONS PER 40 CFR 60 METHOD 1 SECTION 11.0.
10. VENDOR SHALL PROVIDE DETAILS OF PENETRATIONS THROUGH 6' DIAMETER LOWER STACK ASSEMBLY.
11. EXHAUST STACK DESIGN, FABRICATION AND TESTING SHALL BE TO SPECIFICATION 145579-V-SP-005 AND DATA SHEET 145579-V-DS-005.1.

Rev.	REVISION DESCRIPTION	Date	By	Chk'd	Appr'd	Pkg Eng Appr'd
H	REVISED PER ENGINEERING DIRECTION	1-24-06	CBT	KJM	N/A	N/A
G	REVISED PER ENGINEERING DIRECTION	11 JAN 06	SHM	KJM	N/A	N/A
F	REVISED PER ENGINEERING DIRECTION	11-3-05	CBT	JL	N/A	N/A
E	REISSUED FOR DGN FILL REVIEW/HSE REPORT (AREA 36 ONLY)	13 APR 05	JDH	PCF	FWS	TH
D	ISSUED FOR DGN FILL REVIEW/HSE REPORT (AREA 34 ONLY)	15 MAR 05	RDB	PCF	FWS	TH
C	ISSUED FOR INFORMATION	01 FEB 05	RDB	AP	FWS	TH
B	ISSUED FOR INTERNAL APPROVAL	15 DEC 04	RDB	AP	FWS	TH
A	ISSUED FOR REVIEW	13/OCT/04	RDB	AP	FWS	JDS

PAGE DRAWING NO: F-145579-36-V-0021 — REV: H

amec

PAGE TITLE: 145579-FINAL DBVS DESIGN

U.S. DEPARTMENT OF ENERGY
Office of River Protection

BULK VITRIFICATION
OFF-GAS EXHAUST STACK
DETAILS

NAME	DATE
DRAWN BY	
CHK DESIGNER BY	
CHECKED BY	
LEAD(s) APPROVED	
CONSULTING ENGINEER	
PROJECT ENGINEER	
LEAD AUTHORITY	

SIZE F — SCALE A/N — SHEET 1 OF 1

DWG NO	TITLE	REF NUMBER	TITLE
–		–	

DRAWING TRACEABILITY LIST — REFERENCES — NEXT USED ON

REV NO	DESCRIPTION	REF DWG	REV BY	CHECKED BY	DATE	COMPANY
–						

REVISIONS

NOTES:

1. ONLY VENTILATION DUCTWORK PIPING AND SUPPORTING CABLE TRAYS SHOWN. ALL OTHER PIPING AND CABLE TRAYS OMITTED FOR CLARITY.
2. DIMENSIONS AND LOCATIONS OF JOINTS TO BE CONFIRMED BY SELECTED VENDOR.
3. VENTILATION DUCTWORK PIPING TO BE MINIMUM THICKNESS SCHEDULE 40 COMPLETE WITH LONG RADIUS ELBOWS FOR 6" AND SMALLER AND SCHEDULE 10 PIPE AND PIPE FITTINGS FOR PIPE 8" AND LARGER EXCEPT AS NOTED.
4. DUCTWORK MATERIAL AND FABRICATION SHALL CONFORM TO ASME B31.1 POWER PIPING.
5. DUCTWORK FITTINGS AS PER AMEC DWG. NO. F-145579-36-V-0023 STANDARD DETAILS – SHT. 1.
6. I.O. DESIGNATES ISOLATION DAMPERS TO BE FLANDERS ROUND BUBBLE-TIGHT (FLAT BLADE TYPE). FLANGES TO MATCH 150# DRILLING.
7. VENTILATION DUCTWORK SUPPORTS ARE REPRESENTED BY A HEXAGON.
   EXAMPLES – VS- OR RG- CG- CS- A- H- DS-
   FOR 'VS' TYPE SUPPORTS SEE DWG. F-145579-36-0024.
   FOR ALL OTHER SUPPORTS SEE DRAWINGS F-145579-00-P-0001 TO -0004.
8. SEE BRANCH REINFORCEMENT DETAIL ON DWG. F-145579-36-V-0023 FOR FITTINGS SHOWN SHADED.

HOLDS:
1. PENDING VENDOR INFORMATION.

No.	AMEC Dwg. No.	REFERENCE DRAWINGS
1	F-145579-00-0-0041	MELT AREA G.A. ELEVATIONS NORTH AND WEST
2	F-145579-00-0-0051	MELT AREA G.A. PLAN VIEWS
3	F-145579-36-V-0003	OFF-GAS TREATMENT MELT & DRYER LOWER PLAN
4	F-145579-36-V-0004	OFF-GAS TREATMENT MELT & DRYER MIDDLE PLAN
5	F-145579-36-V-0005	OFF-GAS TREATMENT MELT & DRYER UPPER PLANS
6	F-145579-36-V-0028	OFF-GAS TREATMENT MELT & DRYER SECTION C
7	F-145579-36-V-0029	OFF-GAS TREATMENT MELT & DRYER SECTION D
8	F-145579-36-V-0030	OFF-GAS TREATMENT MELT & DRYER SECTION E

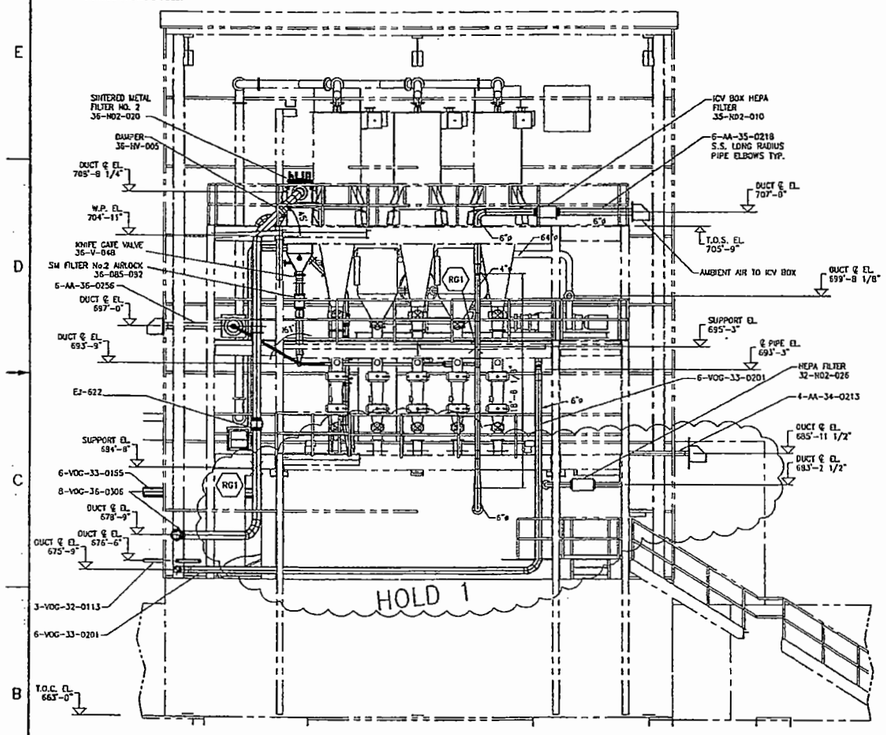

SECTION A/A 0003/0004/0005
1/4"=1'-0"

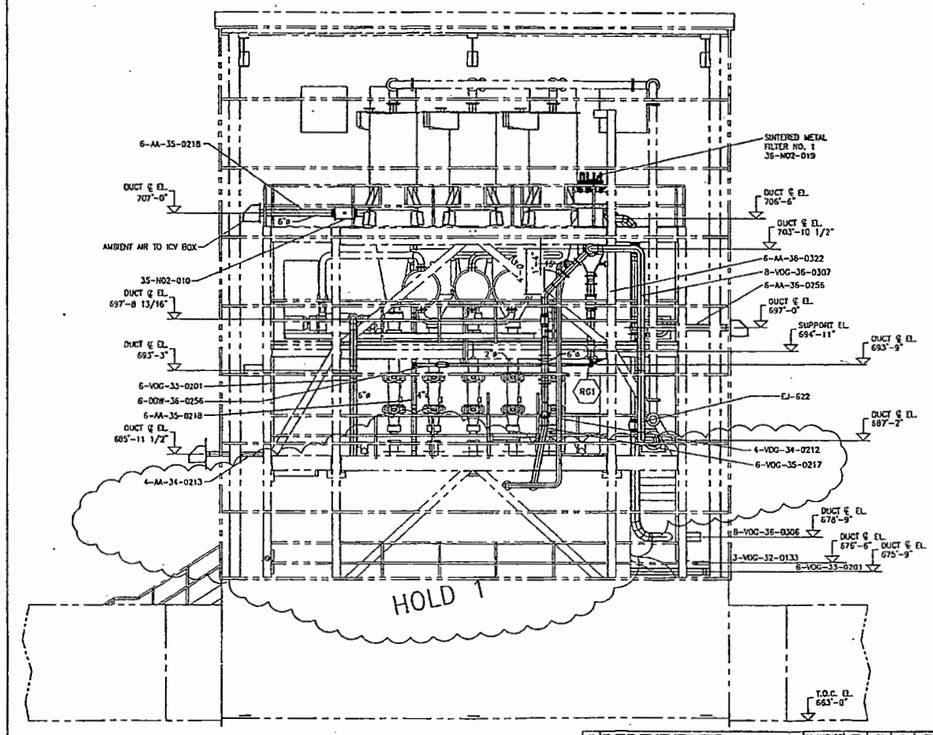

SECTION B/B 0003/0004/0005
1/4"=1'-0"

REV	DATE	DESCRIPTION	BY	CHK'D	APP'D
H	24 MAR 06	RE-ISSUED FOR OGTS DESIGN REPORT	SW	AM	JL	JGC
G	24 FEB 06	ISSUED OGTS DESIGN REPORT	RBB	AM	SRB	JGC
F	16/12/05	ISSUED FOR DESIGN	RBB		FWS	JDS
E	26/04/05	RESSUED FOR CHZM HILL REVIEW/RIKE REPORT (AREA 36 ONLY)	JCH	PCF	FWS	SC
D	15/03/05	ISSUED FOR CHZM HILL REVIEW/RIKE REPORT (AREA 36 ONLY)	RDB	PCF	FWS	TH
C	02/03/05	ISSUED FOR CHZM HILL REVIEW/RIKE REPORT (OCF SYSTEM)	RDB	PCF	CJ	TH
B	17/12/04	ISSUED FOR INTERNAL APPROVAL	RDB	AP	FWS	TH
A	05/11/04	ISSUED FOR REVIEW	RDB	AP	FWS	TH

F-145579-36-V-0027 H

amec

145579-FINAL DBVS DESIGN

U.S. DEPARTMENT OF ENERGY
Office of River Protection

BULK VITRIFICATION
OFF-GAS TREATMENT
MELT & DRYER SECTIONS A & B

SCALE 1/4"=1'-0"

NOT APPROVED FOR CONSTRUCTION

DWG NO	TITLE	REF NUMBER	TITLE
DRAWING TRACEABILITY LIST		REFERENCES	

NEXT USED ON

REVISIONS

In making requests for transmittal of data by any electronic media, the Company receiving such data agrees that AMEC Americas Limited cannot be held responsible for users of the data outside of or beyond the scope of our original agreement. Also, because data stored in electronic media or transmitted by electronic means can deteriorate undetected or be modified without the consultant's knowledge, the Company receiving data agrees that AMEC Americas Limited cannot be held liable for the compatibility, completeness or correctness of the data.

No.	AMEC Dwg. No.	REFERENCE DRAWINGS
1	F-145579-00-D-0041	MELT AREA G.A. ELEVATIONS NORTH AND WEST
2	F-145579-00-D-0051	MELT AREA G.A. PLAN VIEWS
3	F-145579-36-V-0003	OFF-GAS TREATMENT MELT & DRYER LOWER PLAN
4	F-145579-36-V-0004	OFF-GAS TREATMENT MELT & DRYER MIDDLE PLAN
5	F-145579-36-V-0005	OFF-GAS TREATMENT MELT & DRYER UPPER PLANS
6	F-145579-36-V-0027	OFF-GAS TREATMENT MELT & DRYER SECTIONS A & B
7	F-145579-36-V-0029	OFF-GAS TREATMENT MELT & DRYER SECTION D
8	F-145579-36-V-0030	OFF-GAS TREATMENT MELT & DRYER SECTION E

NOTES:

1. ONLY VENTILATION DUCTWORK PIPING AND SUPPORTING CABLE TRAYS SHOWN. ALL OTHER PIPING AND CABLE TRAYS OMITTED FOR CLARITY.
2. DIMENSIONS AND LOCATIONS OF JOINTS TO BE CONFIRMED BY SELECTED VENDOR.
3. VENTILATION DUCTWORK PIPING TO BE MINIMUM THICKNESS SCHEDULE 40 COMPLETE WITH LONG RADIUS ELBOWS FOR 6" AND SMALLER AND SCHEDULE 10 PIPE AND PIPE FITTINGS FOR PIPE 8" AND LARGER EXCEPT AS NOTED.
4. DUCTWORK MATERIAL AND FABRICATION SHALL CONFORM TO ASME B31.1 POWER PIPING.
5. DUCTWORK FITTINGS AS PER AMEC DWG. NO. F-145579-36-V-0023 STANDARD DETAILS - SHT. 1.
6. I.D. DESIGNATES ISOLATION DAMPERS TO BE FLANGED ROUND BUBBLE-TIGHT (FLAT BLADE TYPE). FLANGES TO MATCH 150# DRILLING.
7. VENTILATION DUCTWORK SUPPORTS ARE REPRESENTED BY A HEXAGON.
   EXAMPLES - VS- OR RG- CG- CS- A- H- DS-
   FOR 'VS' TYPE SUPPORTS SEE DWG. F-145579-36-0024.
   FOR ALL OTHER SUPPORTS SEE DRAWINGS F-145579-00-P-0001 TO -0004.
8. SEE BRANCH REINFORCEMENT DETAIL ON DWG. F-145579-36-V-0023 FOR FITTINGS SHOWN SHADED.

HOLDS: K
1. PENDING VENDOR INFORMATION.

NOT APPROVED FOR CONSTRUCTION

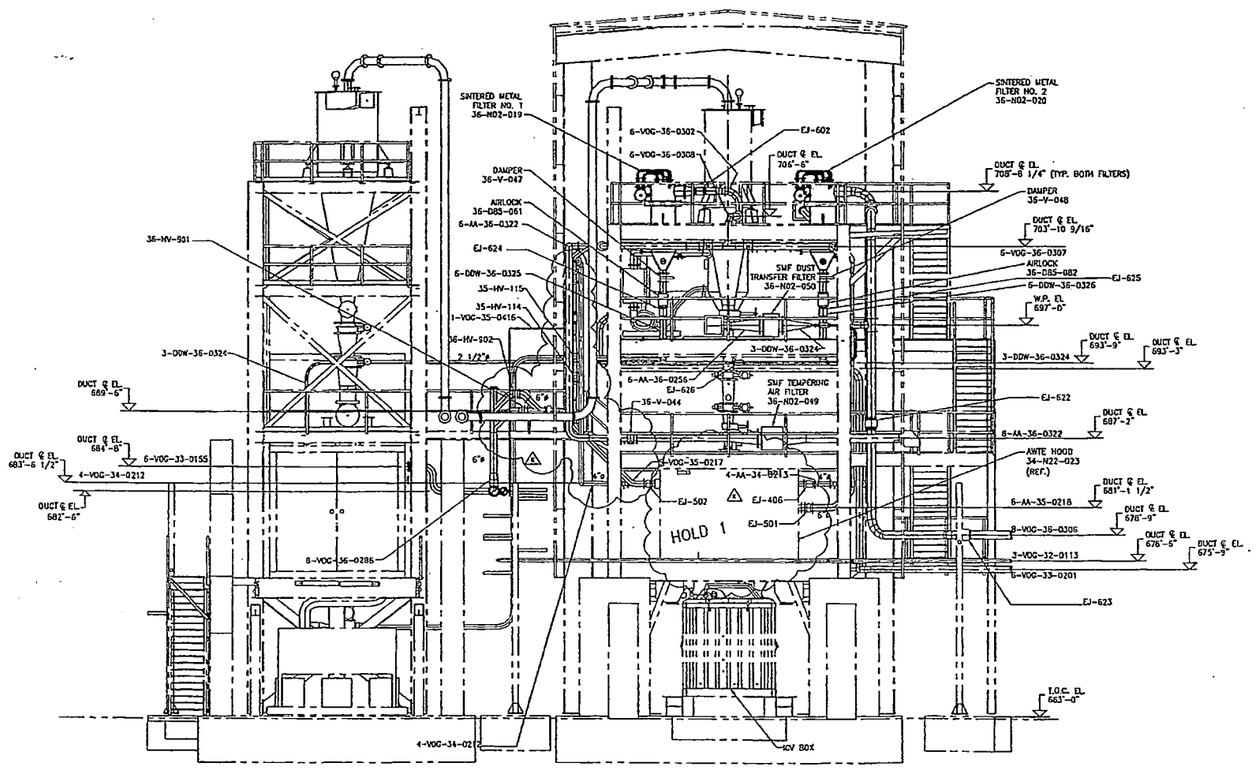

SECTION C/0003 C/0004 C/0005
1/4"=1'-0"

Rev.	REVISION DESCRIPTION	Date	By	CHK'D	Approved	Approved
K	RE-ISSUED FOR OCTS DESIGN PACKAGE	24 MAR 06	SW	JM	JL	JSG
J	ISSUED FOR OCTS DESIGN REVIEW	24 FEB 06	RDB	JM	SRB	JSG
H	ISSUED FOR DESIGN	16/12/05	RDB		FWS	JDS
G	ISSUED FOR INFORMATION - OFF-GAS SYSTEM REVISED	14/11/05	RDB		FWS	JDS
F	REISSUED FOR CHZM HILL REVIEW/BOE REPORT(AREA 36 ONLY)	28/04/05	RDB	PCF	FWS	SG
E	ISSUED FOR CHZM HILL REVIEW/BOE REPORT (AREA 36 ONLY)	15/03/05	RDB	PCF	FWS	TH
D	ISSUED FOR CHZM HILL REVIEW/BOE REPORT (OCV SYSTEM)	02/03/05	RDB	PCF	GJ	TH
C	ISSUED FOR CHZM HILL REVIEW/BOE REPORT (AREA 33 ONLY)	31/01/05	RDB	PCF	FWS	TH
B	ISSUED FOR INTERNAL APPROVAL	17/12/04	RDB	AP	FWS	TH
A	ISSUED FOR REVIEW	03/11/04	RDB	AP	FWS	TH

AMEC DRAWING NO: F-145579-36-V-0028 — REV: K

amec

AMEC PROJECT: 145579-FINAL DBVS DESIGN

U.S. DEPARTMENT OF ENERGY
Office of River Protection

BULK VITRIFICATION
OFF-GAS TREATMENT
MELT & DRYER SECTION 'C'

SIZE: F — SCALE: 1/4"=1'-0" — SHEET — OF

NAME	DATE
DRAWN BY	
CHECKED BY	
ISSUED BY DISCIPLINE	
DISCIPLINE MANAGER	
PROJECT MANAGER	
DESIGN AUTHORITY	

DWG NO	TITLE	REF NUMBER	TITLE
DRAWING TRACEABILITY LIST		REFERENCES	

NEXT USED ON

REV NO	DESCRIPTION	REV BY DATE	REV BY	CHECKED BY	DATE	COMPANY
REVISIONS						

In making requests for transmittal of data by any electronic media, the Company receiving such data agrees that AMEC Americas Limited cannot be held responsible for uses of the data outside of or beyond the scope of our original agreement. Also, because data stored in electronic media or transmitted by electronic means can deteriorate undetected or be modified without the consultant's knowledge, the Company receiving data agrees that AMEC Americas Limited cannot be held liable for the compatibility, completeness or correctness of the data.

No.	AMEC Dwg. No.	REFERENCE DRAWINGS
1	F-145579-00-D-0041	WELT AREA G.A. ELEVATIONS NORTH AND WEST
2	F-145579-00-D-0051	WELT AREA G.A. PLAN VIEWS
3	F-145579-36-V-0003	OFF-GAS TREATMENT WELT & DRYER LOWER PLAN
4	F-145579-36-V-0004	OFF-GAS TREATMENT WELT & DRYER MIDDLE PLAN
5	F-145579-36-V-0005	OFF-GAS TREATMENT WELT & DRYER UPPER PLANS
6	F-145579-36-V-0027	OFF-GAS TREATMENT WELT & DRYER SECTIONS A & B
7	F-145579-36-V-0028	OFF-GAS TREATMENT WELT & DRYER SECTION C
8	F-145579-36-V-0030	OFF-GAS TREATMENT WELT & DRYER SECTION E

NOTES:

1. ONLY VENTILATION DUCTWORK PIPING AND SUPPORTING CABLE TRAYS SHOWN. ALL OTHER PIPING AND CABLE TRAYS OMITTED FOR CLARITY.
2. DIMENSIONS AND LOCATIONS OF JOINTS TO BE CONFIRMED BY SELECTED VENDOR.
3. VENTILATION DUCTWORK PIPING TO BE MINIMUM THICKNESS SCHEDULE 10 COMPLETE WITH LONG RADIUS ELBOWS FOR 6" AND SMALLER AND SCHEDULE 10 PIPE AND PIPE FITTINGS FOR PIPE 8" AND LARGER EXCEPT AS NOTED.
4. DUCTWORK MATERIAL AND FABRICATION SHALL CONFORM TO ASME B31.1 POWER PIPING.
5. DUCTWORK FITTINGS AS PER AMEC DWG. NO. F-145579-36-V-0023 STANDARD DETAILS - SHT. 1.
6. I.D. DESIGNATES ISOLATION DAMPERS TO BE FLANGERS ROUND BUBBLE-TIGHT (FLAT BLADE TYPE). FLANGES TO MATCH 150# DRILLING.
7. VENTILATION DUCTWORK SUPPORTS ARE REPRESENTED BY A HEXAGON.
   EXAMPLES - VS- OR RG- CG- CS- A- H- DS-
   FOR "VS" TYPE SUPPORTS SEE DWG. F-145579-36-0024.
   FOR ALL OTHER SUPPORTS SEE DRAWINGS F-145579-00-P-0001 TO -0004.
8. SEE BRANCH REINFORCEMENT DETAIL ON DWG. F-145579-36-V-0023 FOR FITTINGS SHOWN SHADED.

HOLDS:
1. PENDING VENDOR INFORMATION.

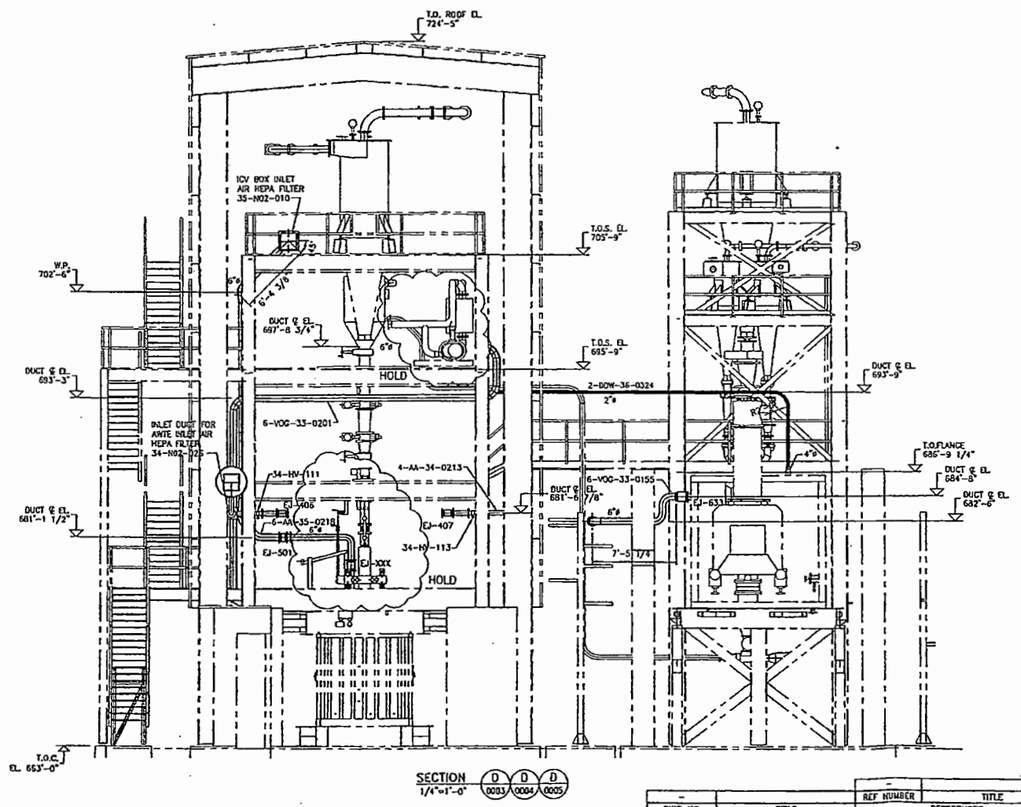

SECTION 1/4"=1'-0" D0033 D0034 D0035

NOT APPROVED FOR CONSTRUCTION

Rev.	REVISION DESCRIPTION	Date	By	Chk'd	Appr'd	Appr'd
J	ISSUED FOR CHCM REVIEW/REPORT (AREA 36 ONLY)	23 MAR 06	THB	JM	JL	JGG
H	ISSUED FOR OGTS DESIGN REPORT	24 FEB 06	RRB	JM	SMB	JGG
G	ISSUED FOR REVIEW	18/12/05	RRB		PWS	JGG
F	REISSUED FOR CHCM HILL REVIEW/PGE REPORT (AREA 36 ONLY)	28/04/05	JCH	PCF	PWS	SC
E	ISSUED FOR CHCM HILL REVIEW/PGE REPORT (AREA 36 ONLY)	15/03/05	JCH	PCF	PWS	TH
D	ISSUED FOR CHCM HILL REVIEW/PGE REPORT - (DGV SYSTEM)	02/03/05	JCH	PCF	GJ	TH
C	ISSUED FOR CHCM HILL REVIEW/PGE REPORT - (AREA 33 ONLY)	31/01/05	JCH	PCF	PWS	TH
B	ISSUED FOR INTERNAL APPROVAL	17/12/04	RDB	AP	PWS	TH
A	ISSUED FOR REVIEW	10/11/04	RDB	AP	GJ	TH

AMEC DRAWING NO: F-145579-36-V-0029 REV: J

amec

AMEC PROJECT: 145579-FINAL DBVS DESIGN

U.S. DEPARTMENT OF ENERGY
Office of River Protection

BULK VITRIFICATION
OFF-GAS TREATMENT
MELT & DRYER SECTION 'D'

SIZE: F SCALE: 1/4"=1'-0"

NAME	DATE
DRAWN BY JCH	
DESIGNED BY	
CHECKED BY	
PROJECT ENGINEER	
STRUCTURAL ENGINEER	
PROJECT MANAGER	
DESIGN AUTHORITY	

DWG NO	TITLE
DRAWING TRACEABILITY LIST	

REF NUMBER	TITLE
REFERENCES	
NEXT USED ON	

REV	DESCRIPTION	CHECKED BY	DATE
REVISIONS			

In making requests for transmittal of data by any electronic media, the Company receiving such data agrees that AMEC Americas Limited cannot be held responsible for users of the data outside of or beyond the scope of our original agreement. Also, because data stored in electronic media or transmitted by electronic means can deteriorate undetected or be modified without the consultant's knowledge, the Company receiving data agrees that AMEC Americas Limited cannot be held liable for the compatibility, completeness or correctness of the data.

No.	AMEC Dwg. No.	REFERENCE DRAWINGS
1	F-145579-00-D-0041	MELT AREA G.A. ELEVATIONS NORTH AND WEST
2	F-145579-00-D-0051	MELT AREA G.A. PLAN VIEWS
3	F-145579-36-V-0003	OFF-GAS TREATMENT MELT & DRYER LOWER PLAN
4	F-145579-36-V-0004	OFF-GAS TREATMENT MELT & DRYER MIDDLE PLAN
5	F-145579-36-V-0005	OFF-GAS TREATMENT MELT & DRYER UPPER PLANS
5	F-145579-36-V-0027	OFF-GAS TREATMENT MELT & DRYER SECTIONS A & B
6	F-145579-36-V-0028	OFF-GAS TREATMENT MELT & DRYER SECTION C
7	F-145579-36-V-0029	OFF-GAS TREATMENT MELT & DRYER SECTION D

NOTES:

1. ONLY VENTILATION DUCTWORK PIPING AND SUPPORTING CABLE TRAYS SHOWN. ALL OTHER PIPING AND CABLE TRAYS OMITTED FOR CLARITY.
2. DIMENSIONS AND LOCATIONS OF JOINTS TO BE CONFIRMED BY SELECTED VENDOR.
3. VENTILATION DUCTWORK PIPING TO BE MINIMUM THICKNESS SCHEDULE 40 COMPLETE WITH LONG RADIUS ELBOWS FOR 6" AND SMALLER AND SCHEDULE 10 PIPE AND PIPE FITTINGS FOR PIPE 8" AND LARGER EXCEPT AS NOTED.
4. DUCTWORK MATERIAL AND FABRICATION SHALL CONFORM TO ASME B31.1 POWER PIPING.
5. DUCTWORK FITTINGS AS PER AMEC DWG. NO. F-145579-36-V-0023 STANDARD DETAILS – SHT. 1.
6. I.D. DESIGNATES ISOLATION DAMPERS TO BE FLANGERS ROUND BUBBLE-TIGHT (FLAT BLADE TYPE). FLANGES TO MATCH 150# DRILLING.
7. VENTILATION DUCTWORK SUPPORTS ARE REPRESENTED BY A HEXAGON.
   EXAMPLES – VS- OR RC- CG- CS- A- H- DS-
   FOR "VS" TYPE SUPPORTS SEE DWG. F-145579-36-0024.
   FOR ALL OTHER SUPPORTS SEE DRAWINGS F-145579-00-P-0001 TO -0004.
8. SEE BRANCH REINFORCEMENT DETAIL ON DWG. F-145579-36-V-0023 FOR FITTINGS SHOWN SHADED.

HOLDS:
1. PENDING VENDOR INFORMATION.

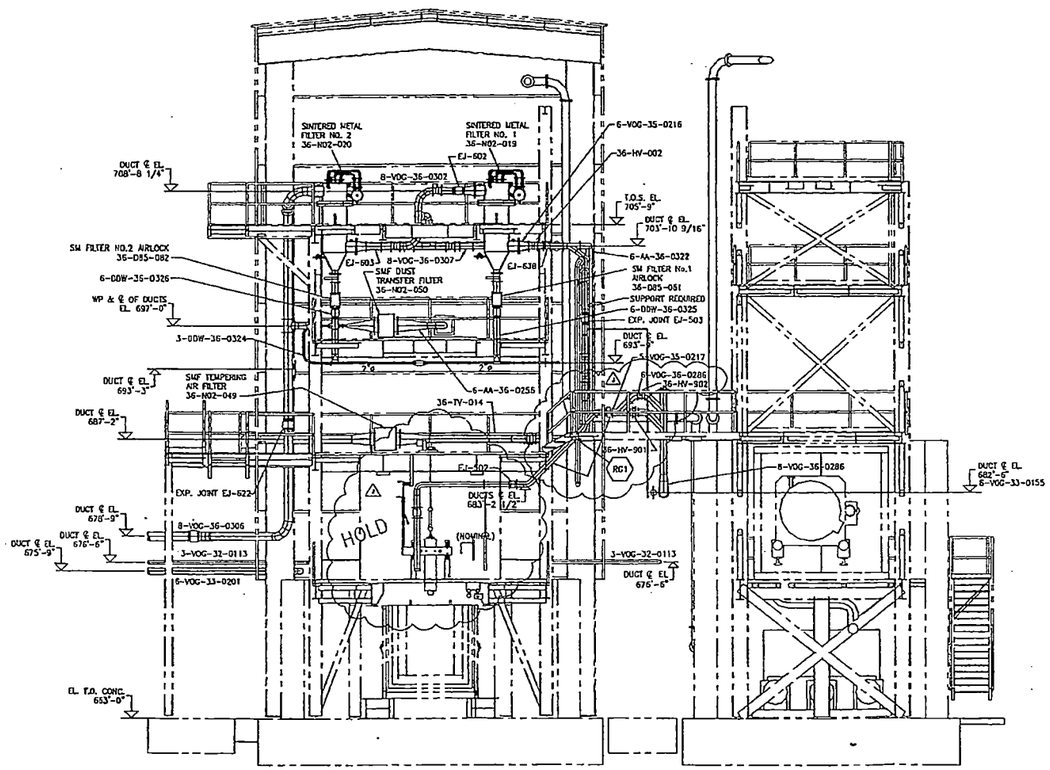

SECTION E/0003 E/0004 E/0005
1/4"=1'-0"

NOT APPROVED FOR CONSTRUCTION

Rev.	REVISION DESCRIPTION	Date	By	Chk'd	Approved	Authorized
J	RE-ISSUED FOR OGTS DESIGN REPORT	25 MAR 06	TMB	AM	JL	JSG
H	ISSUED FOR OGTS DESIGN REPORT	24 FEB 06	RRB	AM	SRG	JSG
G	ISSUED FOR DESIGN	16/12/05	RRB		FWS	JDS
F	ISSUED FOR INFORMATION – OFF-GAS SYSTEM REVISED	14/11/05	RRB		FWS	JDS
E	REISSUED FOR CHEM MILL REVIEW/HOX REPORT (AREA 36 ONLY)	26/04/05	JCM	PCF	FWS	SC
D	ISSUED FOR CHEM MILL REVIEW/HOX REPORT (AREA 36 ONLY)	15/03/05	JCM	PCF	FWS	TM
C	ISSUED FOR CHEM MILL REVIEW/HOX REPORT (CV SYSTEM)	03/03/05	JCM	PCF	GJ	TM
B	ISSUED FOR CHEM MILL REVIEW/HOX REPORT (AREA 33 ONLY)	31/01/05	RRB	PCF	FWS	TM
A	ISSUED FOR INTERNAL APPROVAL	17/12/04	RRB	AP	FWS	TM

AMEC DRAWING NO: F-145579-36-V-0030 REV: J

amec

AMEC PROJECT: 145579-FINAL DBVS DESIGN

U.S. DEPARTMENT OF ENERGY
Office of River Protection

BULK VITRIFICATION
OFF-GAS TREATMENT
MELT & DRYER SECTION 'E'

SIZE: F SCALE: 1/4"=1'-0"

DWG NO	TITLE	REF NUMBER	TITLE
DRAWING TRACEABILITY LIST		REFERENCES	
		NEXT USED ON	

REVISIONS

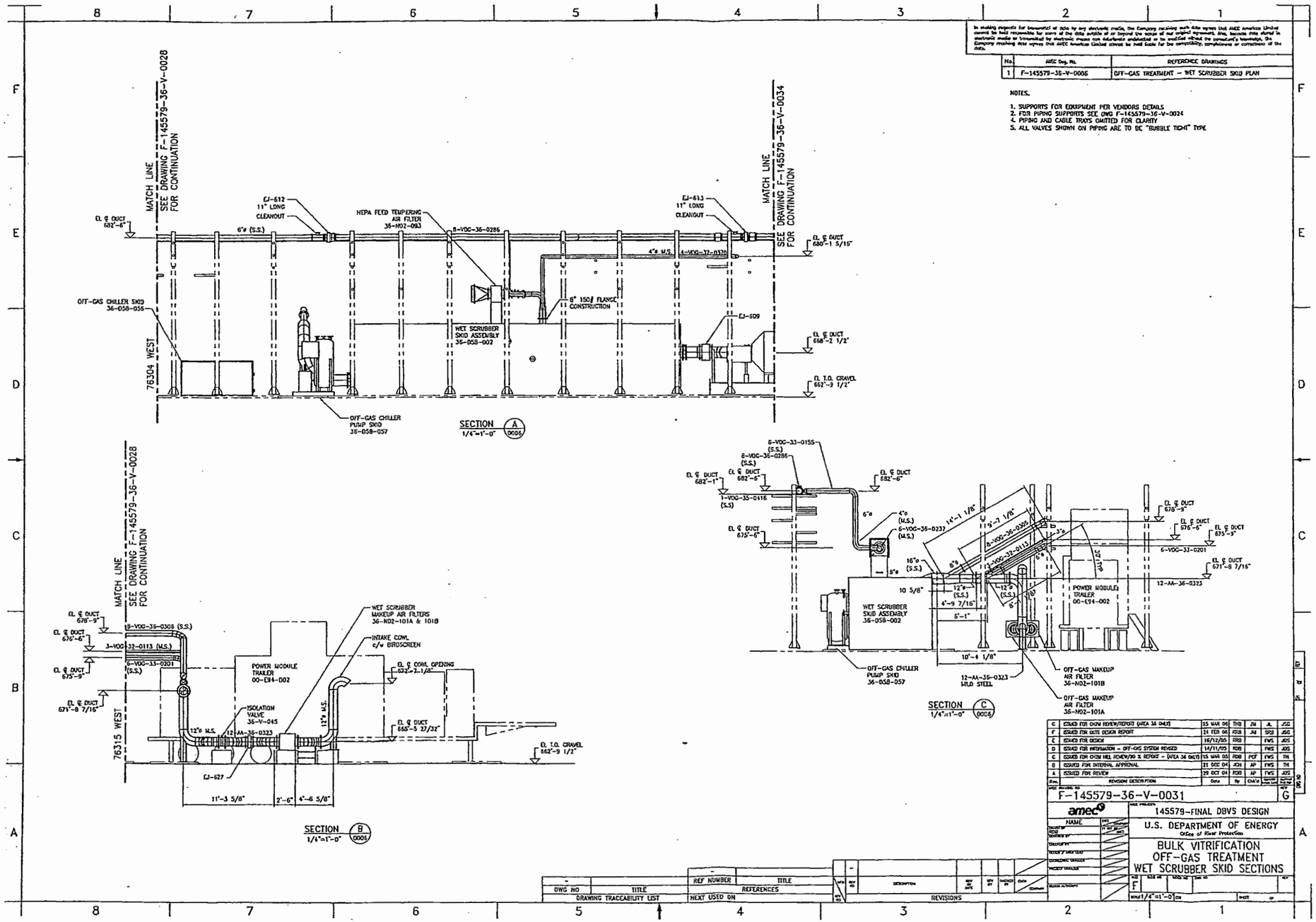

No.	AMEC Dwg. No.	REFERENCE DRAWINGS
1	F-145579-36-V-0006	OFF-GAS TREATMENT – WET SCRUBBER SKID PLAN

NOTES.

1. SUPPORTS FOR EQUIPMENT PER VENDORS DETAILS
2. FOR PIPING SUPPORTS SEE DWG F-145579-36-V-0024
4. PIPING AND CABLE TRAYS OMITTED FOR CLARITY
5. ALL VALVES SHOWN ON PIPING ARE TO BE "BUBBLE TIGHT" TYPE

REF NUMBER	TITLE
DWG NO	TITLE

DRAWING TRACEABILITY LIST — REFERENCES — NEXT USED ON

REVISIONS

REV	DESCRIPTION
C	ISSUED FOR CHEM REVIEW/REPORT (AREA 36 ONLY)
F	ISSUED FOR GATE DESIGN REPORT
E	ISSUED FOR DESIGN
D	ISSUED FOR INFORMATION – OFF-GAS SYSTEM REVISED
C	ISSUED FOR CHEM MEL REVIEW/90 % REPORT – (AREA 36 ONLY)
B	ISSUED FOR INTERNAL APPROVAL
A	ISSUED FOR REVIEW

In making requests for transmittal of data by any electronic media, the Company requesting such data agrees that AMEC Americas Limited cannot be held responsible for users of the data outside of or beyond the scope of our original agreement, since, because data stored in electronic media or transmitted by electronic means can deteriorate undetected or be modified without the sender's knowledge, the Company requesting data agrees that AMEC Americas Limited cannot be held liable for the compatibility, completeness or correctness of the data.

No	AMEC Dwg. No.	REFERENCE DRAWINGS
1	F-145579-00-D-0008	OFF-GAS & ELECT. TRAILERS G.A. - PLAN
2	F-145579-00-P-0007	OFF-GAS TREATMENT - PIPING LAYOUT
3	F-145579-00-P-0012	OFF-GAS TREATMENT - PIPING SECTIONS
4	F-145579-36-V-0007	OFF-GAS TREATMENT - SCRUB & STACK PLAN
5	F-145579-36-V-0034	OFF-GAS TREATMENT - SCRUB & STACK SECTIONS
6	F-145579-36-V-0021	OFF-GAS EXHAUST STACK DETAILS

NOTES:

1. ONLY VENTILATION DUCTWORK PIPING AND SUPPORTING CABLE TRAYS SHOWN. ALL OTHER PIPING AND CABLE TRAYS OMITTED FOR CLARITY.
2. DIMENSIONS AND LOCATIONS OF JOINTS TO BE CONFIRMED BY SELECTED VENDOR.
3. VENTILATION DUCTWORK PIPING TO BE MINIMUM THICKNESS SCHEDULE 40 COMPLETE WITH LONG RADIUS ELBOWS FOR 6" AND SMALLER AND SCHEDULE 10 PIPE AND PIPE FITTINGS FOR PIPE 8" AND LARGER EXCEPT AS NOTED.
4. DUCTWORK MATERIAL AND FABRICATION SHALL CONFORM TO ASME B31.1 POWER PIPING.
5. DUCTWORK FITTINGS AS PER AMEC DWG. NO. F-145579-36-V-0023 STANDARD DETAILS - SHT. 1.
6. I.O. DESIGNATES ISOLATION DAMPERS TO BE FLANDERS ROUND BUBBLE-TIGHT (FLAT BLADE TYPE). FLANGES TO MATCH 150# DRILLING.
7. VENTILATION DUCTWORK SUPPORTS ARE REPRESENTED BY A HEXAGON.
   EXAMPLES - VS- OR RG- CG- CS- A- H- DS-
   FOR 'VS' TYPE SUPPORTS SEE DWG. F-145579-36-0024.
   FOR ALL OTHER SUPPORTS SEE DRAWINGS F-145579-00-P-0001 TO -0004.
8. SEE BRANCH REINFORCEMENT DETAIL ON DWG. F-145579-36-V-0023 FOR FITTINGS SHOWN SHADED.

HOLDS:
1. PENDING VENDOR INFORMATION.

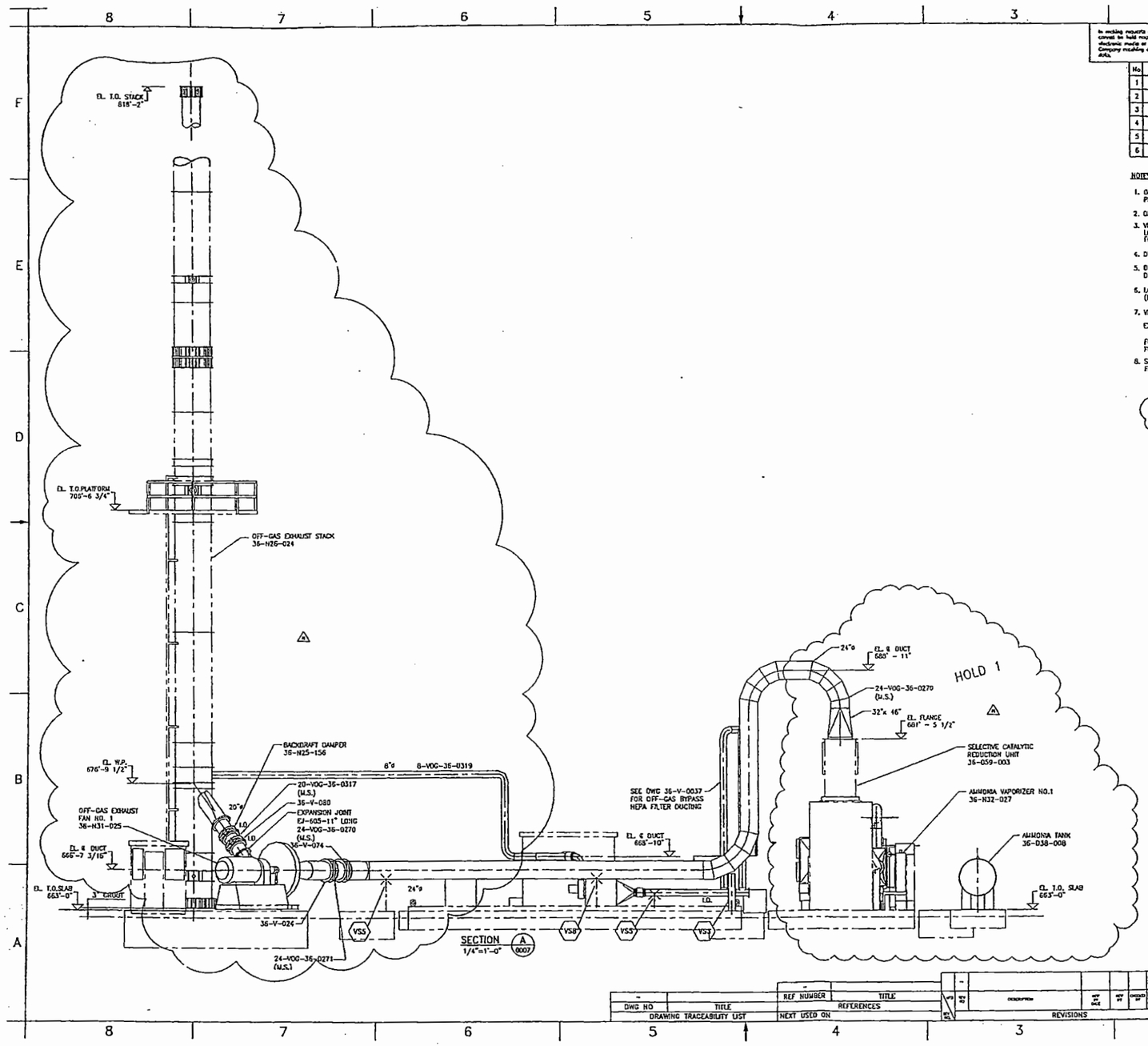

DWG NO	TITLE	REF NUMBER	TITLE
DRAWING TRACEABILITY LIST		REFERENCES	
		NEXT USED ON	

REV NO	DESCRIPTION	REV BY DATE	REV BY	CHECKED BY	CHCB COMPANY
H	RE-ISSUED FOR CHCM REVIEW/ REPORT (AREA 36 ONLY)	25 MAR 06	TMB	JM	JL	JSG
G	ISSUED FOR DCTS DESIGN REPORT	24 FEB 06	RRB	JM	SRB	JSG
F	ISSUED FOR DESIGN	16/12/05	RRB		FWS	JGS
E	ISSUED FOR INFORMATION - OFF-GAS SYSTEM REVISED	14/11/05	RDB		FWS	JGS
D	REISSUED FOR CHCM HILL REVIEW/BIDE REPORT-(AREA 36 ONLY)	28/04/05	RDB	PCF	FWS	SC
C	ISSUED FOR CHCM HILL REVIEW/BIDE REPORT-(AREA 36 ONLY)	15/03/05	JCH	PCF	FWS	TH
B	ISSUED FOR INTERNAL APPROVAL	21/12/04	RDB	AP	FWS	TH
A	ISSUED FOR REVIEW	23/09/04	JCH	AP	FWS	TH
Rev.	REVISION DESCRIPTION	Date	By	Ch'd	Approved Supp Eng	Approved Project Eng

AMEC PROJECT: 145579-FINAL DBVS DESIGN

U.S. DEPARTMENT OF ENERGY
Office of River Protection

BULK VITRIFICATION
OFF-GAS TREATMENT
SCRUB & STACK SECTION

SIZE F | SCALE 1/4"=1' | SHEET OF

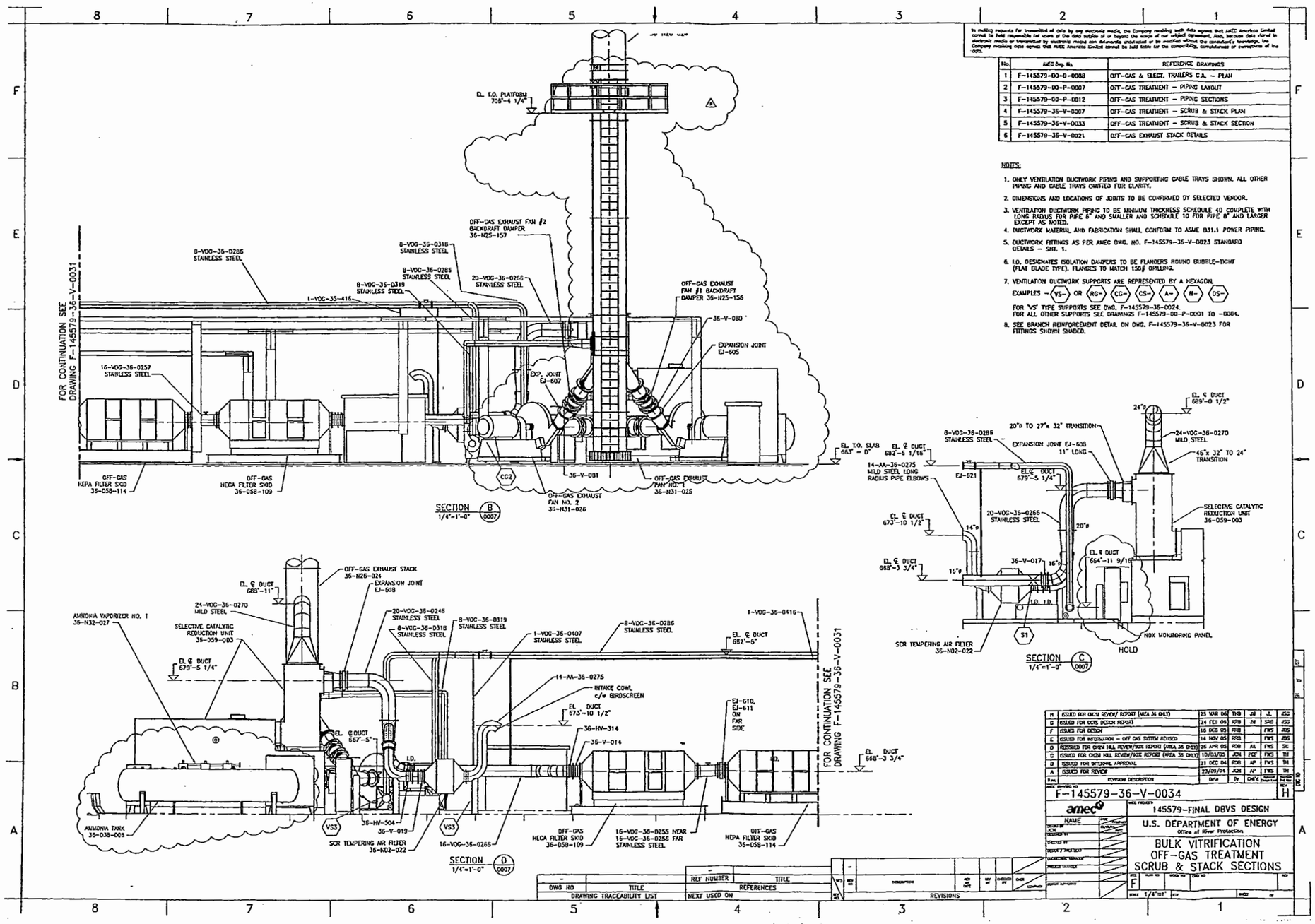

In making requests for transmittal of data by any electronic media, the Company receiving such data agrees that AMEC Americas Limited cannot be held responsible for users of the data outside of or beyond the scope of our original agreement. Also, because data stored in electronic media or transmitted by electronic means can deteriorate undetected or be modified without the consultant's knowledge, the Company receiving data agrees that AMEC Americas Limited cannot be held liable for the compatibility, completeness or correctness of the data.

No.	AMEC Dwg. No.	REFERENCE DRAWINGS
1	F-145579-00-0-0008	OFF-GAS & ELECT. TRAILERS G.A. - PLAN
2	F-145579-00-P-0007	OFF-GAS TREATMENT - PIPING LAYOUT
3	F-145579-00-P-0012	OFF-GAS TREATMENT - PIPING SECTIONS
4	F-145579-36-V-0007	OFF-GAS TREATMENT - SCRUB & STACK PLAN
5	F-145579-36-V-0033	OFF-GAS TREATMENT - SCRUB & STACK SECTION
6	F-145579-36-V-0021	OFF-GAS EXHAUST STACK DETAILS

NOTES:

1. ONLY VENTILATION DUCTWORK PIPING AND SUPPORTING CABLE TRAYS SHOWN. ALL OTHER PIPING AND CABLE TRAYS OMITTED FOR CLARITY.
2. DIMENSIONS AND LOCATIONS OF JOINTS TO BE CONFIRMED BY SELECTED VENDOR.
3. VENTILATION DUCTWORK PIPING TO BE MINIMUM THICKNESS SCHEDULE 40 COMPLETE WITH LONG RADIUS FOR PIPE 6" AND SMALLER AND SCHEDULE 10 FOR PIPE 8" AND LARGER EXCEPT AS NOTED.
4. DUCTWORK MATERIAL AND FABRICATION SHALL CONFORM TO ASME B31.1 POWER PIPING.
5. DUCTWORK FITTINGS AS PER AMEC DWG. NO. F-145579-36-V-0023 STANDARD DETAILS - SHT. 1.
6. I.D. DESIGNATES ISOLATION DAMPERS TO BE FLANGED ROUND BUBBLE-TIGHT (FLAT BLADE TYPE). FLANGES TO MATCH 150# DRILLING.
7. VENTILATION DUCTWORK SUPPORTS ARE REPRESENTED BY A HEXAGON.
   EXAMPLES - VS- OR RG- CG- CS- A- H- DS-
   FOR "VS" TYPE SUPPORTS SEE DWG. F-145579-36-0024.
   FOR ALL OTHER SUPPORTS SEE DRAWINGS F-145579-00-P-0001 TO -0004.
8. SEE BRANCH REINFORCEMENT DETAIL ON DWG. F-145579-36-V-0023 FOR FITTINGS SHOWN SHADED.

REV	REVISION DESCRIPTION	Date	By	CHK'd	Appr'd	Appr'd Amec Lead
H	ISSUED FOR DCN REVIEW/ REPORT (AREA 36 ONLY)	25 MAR 06	TKB	JM	JL	JSG
G	ISSUED FOR DCN DESIGN REPORT	24 FEB 06	RRB	JM	SRB	JSG
F	ISSUED FOR DESIGN	16 DEC 05	RRB		FWS	JDS
E	ISSUED FOR INFORMATION - OFF GAS SYSTEM REVISED	14 NOV 05	RRB		FWS	JDS
D	REISSUED FOR DCN MILL REVIEW/SOX REPORT (AREA 36 ONLY)	26 APR 05	RDB	AA	FWS	SC
C	ISSUED FOR DCN MILL REVIEW/SOX REPORT (AREA 36 ONLY)	10/03/05	JCH	PCF	FWS	TH
B	ISSUED FOR NATIONAL APPROVAL	21 DEC 04	RDB	AP	FWS	TH
A	ISSUED FOR REVIEW	23/09/04	JCH	AP	FWS	TH

AMEC DRAWING NO: F-145579-36-V-0034 — REV: H

amec

AMEC PROJECT: 145579-FINAL DBVS DESIGN

U.S. DEPARTMENT OF ENERGY
Office of River Protection

BULK VITRIFICATION
OFF-GAS TREATMENT
SCRUB & STACK SECTIONS

NAME	DATE
DRAWN BY JCH	
DESIGNED BY	
CHECKED BY	
DESIGN / TRACE LEAD	
DISCIPLINE MANAGER	
PROJECT MANAGER	
AUTHOR REPRESENTATIVE	

SIZE F — SCALE 1/4"=1' — SHEET — OF

DWG NO	TITLE	REF NUMBER	TITLE
DRAWING TRACEABILITY LIST		REFERENCES	
		NEXT USED ON	

REV	DESCRIPTION	CHK'D	APPD
REVISIONS			

DMJM H&N | AECOM

Attachment 2

Calculation No 145579-D-CA-061	**ORIGINATOR:** John Irwin **DATE:** 03-28-2006
Rev. No. : 0	
Calculation Title : DBVS OGTS Thermal Hydraulics Analysis	**CHECKER:** Jack McConwell **DATE:** 3-28-06

AFT Arrow Model Input and Output Files

This page intentionally left blank.

Title: AFT Arrow Model Main OGTS Case 1 (70 °F, Adiabatc, Robinson Fan Curve @ 3550 RPM)
Input File: C:\AFT Products\AFT Arrow\DBVS-OGTS-R2.aro

Number Of Pipes= 83
Number Of Junctions= 84

Length March Solution Method with Mach Number Limits
Segments Per Pipe= 2
Mach Number Increment= 0.01
Pressure Tolerance= 0.0001 relative change
Mass Flow Rate Tolerance= 0.0001 relative change
Enthalpy Tolerance= 0.0001 relative change
Flow Relaxation= (Automatic)
Pressure Relaxation= (Automatic)
Resistance Relaxation= (Automatic)

Fluid Database: AFT Standard
Fluid: Air
Max Fluid Temperature Data= 1000 deg. K
Min Fluid Temperature Data= 200 deg. K
Molecular Weight =28.97 amu
Gas Constant =0.06855 Btu/lbm-R
Critical Pressure =37.25 atm
Critical Temperature =132.41 deg. K
Acentric Factor =0.021
Equation of State= Redlich-Kwong
Enthalpy Model= Generalized
Specific Heat Ratio Accuracy = High
Atmospheric Pressure= 14.3 psia
Gravitational Acceleration= 1 g
Standard Pressure= 14.696 psia
Standard Temperature= 60 deg. F
Turbulent Flow Above Reynolds Number= 4000
Laminar Flow Below Reynolds Number= 2300

Pipe Input Table

Pipe	Name	Pipe Defined	Length	Length Units	Hydraulic Diameter	Hydraulic Diam. Units	Friction Data Set	Roughness	Roughness Units	Losses (K)
1	Pipe	Yes	64	inches	6.065	inches	Unspecified	0.00015	feet	2.93
2	Pipe	Yes	104	inches	6.065	inches	Unspecified	0.00015	feet	0.71
3	Pipe	Yes	177.167	inches	4.026	inches	Unspecified	0.00015	feet	1.855
4	Pipe	Yes	62	inches	6.065	inches	Unspecified	0.00015	feet	0.24
5	Pipe	Yes	22	inches	4.026	inches	Unspecified	0.00015	feet	0
6	Pipe	Yes	72	inches	6.065	inches	Unspecified	0.00015	feet	0.08
7	Pipe	Yes	141.5	inches	5.047	inches	Unspecified	0.00015	feet	0
8	Pipe	Yes	6	inches	6.065	inches	Unspecified	0.00015	feet	0.07
9	Pipe	Yes	38.5	inches	6.065	inches	Unspecified	0.00015	feet	0.24
16	Pipe	Yes	181	inches	15.624	inches	Unspecified	0.00015	feet	0.36
17	Pipe	Yes	28	inches	15.624	inches	Unspecified	0.00015	feet	0
18	Pipe	Yes	25	inches	15.624	inches	Unspecified	0.00015	feet	0.11
19	Pipe	Yes	25	inches	15.624	inches	Unspecified	0.00015	feet	0.21
20	Pipe	Yes	32	inches	15.624	inches	Unspecified	0.00015	feet	0.11
21	Pipe	Yes	20	inches	15.624	inches	Unspecified	0.00015	feet	0.11
22	Pipe	Yes	22	inches	15.624	inches	Unspecified	0.00015	feet	0.11
23	Pipe	Yes	33	inches	15.624	inches	Unspecified	0.00015	feet	0.58
24	Pipe	Yes	5	inches	15.624	inches	Unspecified	0.00015	feet	0
25	Pipe	Yes	19.25	inches	15.624	inches	Unspecified	0.00015	feet	0.15
26	Pipe	Yes	30.25	inches	15.624	inches	Unspecified	0.00015	feet	0.11
27	Pipe	Yes	45	inches	15.624	inches	Unspecified	0.00015	feet	0.11
28	Pipe	Yes	6	inches	15.624	inches	Unspecified	0.00015	feet	0
29	Pipe	Yes	6	inches	15.624	inches	Unspecified	0.00015	feet	0
30	Pipe	Yes	24	inches	15.624	inches	Unspecified	0.00015	feet	0

AFT Arrow 3.0 Input (2 of 12) 2/21/2006 04:13 PM
DMJMH+N

AFT Arrow Model Main OGTS Case 1 (70 °F, Adiabatc, Robinson Fan Curve @ 3550 RPM)

Pipe	Name	Pipe Defined	Length	Length Units	Hydraulic Diameter	Hydraulic Diam. Units	Friction Data Set	Roughness	Roughness Units	Losses (K)
31	Pipe	Yes	173.5	inches	15.624	inches	Unspecified	0.00015	feet	0
32	Pipe	Yes	6	inches	15.624	inches	Unspecified	0.00015	feet	0.18
33	Pipe	Yes	106.25	inches	19.564	inches	Unspecified	0.00015	feet	0.42
35	Pipe	Yes	660	inches	23.5	inches	Unspecified	0.00015	feet	0.57
36	Pipe	Yes	20	inches	23.5	inches	Unspecified	0.00015	feet	0
37	Pipe	Yes	16.5	inches	23.5	inches	Unspecified	0.00015	feet	0
38	24" Sch 10	Yes	34.5	inches	23.5	inches	Unspecified	0.00015	feet	0
39	EJ-604	Yes	18.75	inches	17.624	inches	Unspecified	0.00015	feet	0.1
40	EJ-605	Yes	38.8	inches	19.564	inches	Unspecified	0.00015	feet	0.61
41	EJ-605	Yes	9.5	inches	19.564	inches	Unspecified	0.00015	feet	0
42	EJ-605	Yes	9.5	inches	19.564	inches	Unspecified	0.00015	feet	0
43	Stack	Yes	149	feet	48	inches	Unspecified	0.00015	feet	0.88
50	Pipe	Yes	131	inches	4.026	inches	Unspecified	0.00015	feet	3.16
51	Pipe	Yes	33.875	inches	4.026	inches	Unspecified	0.00015	feet	0.7
52	Pipe	Yes	47.125	inches	4.026	inches	Unspecified	0.00015	feet	0.32
53	Pipe	Yes	83.625	inches	4.026	inches	Unspecified	0.00015	feet	0.32
54	Pipe	Yes	283.25	inches	4.026	inches	Unspecified	0.00015	feet	0.4
55	Pipe	Yes	9.5	inches	5.047	inches	Unspecified	0.00015	feet	0.1
60	Pipe	Yes	120	inches	8.329	inches	Unspecified	0.00015	feet	3.17
61	Pipe	Yes	91	inches	6.065	inches	Unspecified	0.00015	feet	1.35
62	Pipe	Yes	191.5	inches	6.065	inches	Unspecified	0.00015	feet	0.2
63	Pipe	Yes	46.75	inches	5.047	inches	Unspecified	0.00015	feet	0.74
64	Pipe	Yes	24	inches	5.047	inches	Unspecified	0.00015	feet	4.031416E-02
65	Pipe	Yes	18	inches	10.42	inches	Unspecified	0.00015	feet	1.514091
66	Pipe	Yes	152	inches	6.065	inches	Unspecified	0.00015	feet	0.3703681
67	Pipe	Yes	24	inches	6.065	inches	Unspecified	0.00015	feet	0.45909
68	Pipe	Yes	41	inches	6.065	inches	Unspecified	0.00015	feet	0.64
69	Pipe	Yes	15	inches	8.329	inches	Unspecified	0.00015	feet	0.22
70	8" Sch 10	Yes	527	inches	8.329	inches	Unspecified	0.00015	feet	2.3
80	Pipe	Yes	6	inches	1.61	inches	Unspecified	0.00015	feet	0
81	Pipe	Yes	24	inches	1.61	inches	Unspecified	0.00015	feet	1
82	Pipe	Yes	18	inches	2.067	inches	Unspecified	0.00015	feet	0.47
83	Pipe	Yes	149	inches	2.067	inches	Unspecified	0.00015	feet	2.52
84	3" Sch 40	Yes	804	inches	3.068	inches	Unspecified	0.00015	feet	1.28
90	Pipe	Yes	78	inches	12.39	inches	Unspecified	0.00015	feet	2.81
91	Pipe	Yes	80	inches	12.39	inches	Unspecified	0.00015	feet	1.38
92	12" Sch 10	Yes	84	inches	12.39	inches	Unspecified	0.00015	feet	1.02
93	Pipe	Yes	6	inches	12.39	inches	Unspecified	0.00015	feet	0
94	Pipe	Yes	23	inches	12.39	inches	Unspecified	0.00015	feet	0
100	Pipe	Yes	50.5	inches	13.624	inches	Unspecified	0.00015	feet	1.97
101	Pipe	Yes	18.5	inches	13.624	inches	Unspecified	0.00015	feet	0.5
102	Pipe	Yes	8	inches	13.624	inches	Unspecified	0.00015	feet	0
103	14" Sch 10	Yes	59.5	inches	13.624	inches	Unspecified	0.00015	feet	0.29
200	Pipe	Yes	20	inches	12.39	inches	Unspecified	0.00015	feet	0.79
201	Pipe	Yes	10.5	inches	6.065	inches	Unspecified	0.00015	feet	1.26
202	Pipe	Yes	6	inches	6.065	inches	Unspecified	0.00015	feet	0
203	Pipe	Yes	17	inches	6.065	inches	Unspecified	0.00015	feet	0.33
204	Pipe	Yes	62	inches	8.329	inches	Unspecified	0.00015	feet	0.81
210	Pipe	Yes	6	inches	1.61	inches	Unspecified	0.00015	feet	0
211	Pipe	Yes	20	inches	1.61	inches	Unspecified	0.00015	feet	1
212	Pipe	Yes	18	inches	2.067	inches	Unspecified	0.00015	feet	0.47
213	Pipe	Yes	181	inches	4.026	inches	Unspecified	0.00015	feet	0.9
214	Pipe	Yes	313.5	inches	3.068	inches	Unspecified	0.00015	feet	0.02
215	Pipe	Yes	1046	inches	4.026	inches	Unspecified	0.00015	feet	0.9
625	Pipe	Yes	6	inches	15.624	inches	Unspecified	0.00015	feet	0

AFT Arrow 3.0 Input (3 of 12) 2/21/2006 04:13 PM
DMJMH+N

AFT Arrow Model Main OGTS Case 1 (70 °F, Adiabatc, Robinson Fan Curve @ 3550 RPM)

Pipe	Name	Pipe Defined	Length	Length Units	Hydraulic Diameter	Hydraulic Diam. Units	Friction Data Set	Roughness	Roughness Units	Losses (K)
631	Pipe	Yes	6	inches	15.624	inches	Unspecified	0.00015	feet	0
636	Pipe	Yes	6	inches	23.5	inches	Unspecified	0.00015	feet	0
637	Pipe	Yes	1	feet	6.065	inches	Unspecified	0.00015	feet	0
638	Pipe	Yes	12	inches	6.065	inches	Unspecified	0.00015	feet	0

Pipe	Initial Flow	Initial Flow Units	Junctions (Up,Down)	Geometry	Material	Size	Type	Thermal Boundary	Ambient Temp.
1			1, 2	Cylindrical Pipe	Stainless Steel	6 inch	schedule 40	Adiabatic	
2			2, 3	Cylindrical Pipe	Stainless Steel	6 inch	schedule 40	Adiabatic	
3			3, 4	Cylindrical Pipe	Stainless Steel	4 inch	schedule 40	Adiabatic	
4			4, 5	Cylindrical Pipe	Stainless Steel	6 inch	schedule 40	Adiabatic	
5			5, 6	Cylindrical Pipe	Stainless Steel	4 inch	schedule 40	Adiabatic	
6			6, 7	Cylindrical Pipe	Stainless Steel	6 inch	schedule 40	Adiabatic	
7			7, 8	Cylindrical Pipe	Stainless Steel	5 inch	schedule 40	Adiabatic	
8			8, 9	Cylindrical Pipe	Stainless Steel	6 inch	schedule 40	Adiabatic	
9			9, 55	Cylindrical Pipe	Stainless Steel	6 inch	schedule 40	Adiabatic	
16			16, 17	Cylindrical Pipe	Stainless Steel	16 inch	schedule 10	Adiabatic	
17			17, 18	Cylindrical Pipe	Stainless Steel	16 inch	schedule 10	Adiabatic	
18			18, 19	Cylindrical Pipe	Stainless Steel	16 inch	schedule 10	Adiabatic	
19			19, 20	Cylindrical Pipe	Stainless Steel	16 inch	schedule 10	Adiabatic	
20			20, 21	Cylindrical Pipe	Stainless Steel	16 inch	schedule 10	Adiabatic	
21			21, 22	Cylindrical Pipe	Stainless Steel	16 inch	schedule 10	Adiabatic	
22			22, 23	Cylindrical Pipe	Stainless Steel	16 inch	schedule 10	Adiabatic	
23			23, 24	Cylindrical Pipe	Stainless Steel	16 inch	schedule 10	Adiabatic	
24			24, 25	Cylindrical Pipe	Stainless Steel	16 inch	schedule 10	Adiabatic	
25			25, 26	Cylindrical Pipe	Stainless Steel	16 inch	schedule 10	Adiabatic	
26			26, 27	Cylindrical Pipe	Stainless Steel	16 inch	schedule 10	Adiabatic	
27			27, 29	Cylindrical Pipe	Stainless Steel	16 inch	schedule 10	Adiabatic	
28			29, 28	Cylindrical Pipe	Stainless Steel	16 inch	schedule 10	Adiabatic	
29			28, 30	Cylindrical Pipe	Stainless Steel	16 inch	schedule 10	Adiabatic	
30			30, 31	Cylindrical Pipe	Stainless Steel	16 inch	schedule 10	Adiabatic	
31			31, 32	Cylindrical Pipe	Stainless Steel	16 inch	schedule 10	Adiabatic	
32			32, 33	Cylindrical Pipe	Stainless Steel	16 inch	schedule 10	Adiabatic	
33			33, 34	Cylindrical Pipe	Stainless Steel	20 inch	schedule 10	Adiabatic	
35			34, 36	Cylindrical Pipe	Stainless Steel	24 inch	schedule 10	Adiabatic	
36			36, 37	Cylindrical Pipe	Stainless Steel	24 inch	schedule 10	Adiabatic	
37			37, 38	Cylindrical Pipe	Stainless Steel	24 inch	schedule 10	Adiabatic	
38			38, 39	Cylindrical Pipe	Stainless Steel	24 inch	schedule 10	Adiabatic	
39			39, 40	Cylindrical Pipe	Stainless Steel	18 inch	schedule 10	Adiabatic	
40			40, 41	Cylindrical Pipe	Stainless Steel	20 inch	schedule 10	Adiabatic	
41			41, 42	Cylindrical Pipe	Stainless Steel	20 inch	schedule 10	Adiabatic	
42			42, 43	Cylindrical Pipe	Stainless Steel	20 inch	schedule 10	Adiabatic	
43			43, 44	Cylindrical Pipe	Unspecified			Adiabatic	
50			50, 51	Cylindrical Pipe	Stainless Steel	4 inch	schedule 40	Adiabatic	
51			51, 52	Cylindrical Pipe	Stainless Steel	4 inch	schedule 40	Adiabatic	
52			52, 53	Cylindrical Pipe	Stainless Steel	4 inch	schedule 40	Adiabatic	
53			53, 54	Cylindrical Pipe	Stainless Steel	4 inch	schedule 40	Adiabatic	
54			54, 55	Cylindrical Pipe	Stainless Steel	4 inch	schedule 40	Adiabatic	
55			55, 64	Cylindrical Pipe	Stainless Steel	5 inch	schedule 40	Adiabatic	
60			60, 61	Cylindrical Pipe	Stainless Steel	8 inch	schedule 10	Adiabatic	
61			61, 62	Cylindrical Pipe	Stainless Steel	6 inch	schedule 40	Adiabatic	
62			62, 63	Cylindrical Pipe	Stainless Steel	6 inch	schedule 40	Adiabatic	
63			63, 64	Cylindrical Pipe	Stainless Steel	5 inch	schedule 40	Adiabatic	
64			64, 65	Cylindrical Pipe	Stainless Steel	5 inch	schedule 40	Adiabatic	
65			65, 66	Cylindrical Pipe	Stainless Steel	10 inch	schedule 10	Adiabatic	
66			66, 67	Cylindrical Pipe	Stainless Steel	6 inch	schedule 40	Adiabatic	

AFT Arrow 3.0 Input (4 of 12) 2/21/2006 04:13 PM
DMJMH+N

AFT Arrow Model Main OGTS Case 1 (70 °F, Adiabatc, Robinson Fan Curve @ 3550 RPM)

Pipe	Initial Flow	Initial Flow Units	Junctions (Up,Down)	Geometry	Material	Size	Type	Thermal Boundary	Ambient Temp.
67			67, 68	Cylindrical Pipe	Stainless Steel	6 inch	schedule 40	Adiabatic	
68			68, 69	Cylindrical Pipe	Stainless Steel	6 inch	schedule 40	Adiabatic	
69			69, 70	Cylindrical Pipe	Stainless Steel	8 inch	schedule 10	Adiabatic	
70			70, 16	Cylindrical Pipe	Stainless Steel	8 inch	schedule 10	Adiabatic	
80			80, 81	Cylindrical Pipe	Stainless Steel	1-1/2 inch	schedule 40	Adiabatic	
81			81, 82	Cylindrical Pipe	Stainless Steel	1-1/2 inch	schedule 40	Adiabatic	
82			82, 83	Cylindrical Pipe	Stainless Steel	2 inch	schedule 40	Adiabatic	
83			83, 84	Cylindrical Pipe	Stainless Steel	2 inch	schedule 40	Adiabatic	
84			84, 94	Cylindrical Pipe	Stainless Steel	3 inch	schedule 40	Adiabatic	
90			90, 91	Cylindrical Pipe	Stainless Steel	12 inch	schedule 10	Adiabatic	
91			91, 92	Cylindrical Pipe	Stainless Steel	12 inch	schedule 10	Adiabatic	
92			92, 93	Cylindrical Pipe	Stainless Steel	12 inch	schedule 10	Adiabatic	
93			93, 94	Cylindrical Pipe	Stainless Steel	12 inch	schedule 10	Adiabatic	
94			94, 16	Cylindrical Pipe	Stainless Steel	12 inch	schedule 10	Adiabatic	
100			100, 101	Cylindrical Pipe	Stainless Steel	14 inch	schedule 10	Adiabatic	
101			101, 102	Cylindrical Pipe	Stainless Steel	14 inch	schedule 10	Adiabatic	
102			102, 103	Cylindrical Pipe	Stainless Steel	14 inch	schedule 10	Adiabatic	
103			103, 33	Cylindrical Pipe	Stainless Steel	14 inch	schedule 10	Adiabatic	
200			200, 201	Cylindrical Pipe	Stainless Steel	12 inch	schedule 10	Adiabatic	
201			201, 202	Cylindrical Pipe	Stainless Steel	6 inch	schedule 40	Adiabatic	
202			202, 203	Cylindrical Pipe	Stainless Steel	6 inch	schedule 40	Adiabatic	
203			203, 204	Cylindrical Pipe	Stainless Steel	6 inch	schedule 40	Adiabatic	
204			204, 21	Cylindrical Pipe	Stainless Steel	8 inch	schedule 10	Adiabatic	
210			210, 211	Cylindrical Pipe	Stainless Steel	1-1/2 inch	schedule 40	Adiabatic	
211			211, 212	Cylindrical Pipe	Stainless Steel	1-1/2 inch	schedule 40	Adiabatic	
212			212, 213	Cylindrical Pipe	Stainless Steel	2 inch	schedule 40	Adiabatic	
213			213, 214	Cylindrical Pipe	Stainless Steel	4 inch	schedule 40	Adiabatic	
214			214, 215	Cylindrical Pipe	Stainless Steel	3 inch	schedule 40	Adiabatic	
215			215, 204	Cylindrical Pipe	Stainless Steel	4 inch	schedule 40	Adiabatic	
625			625, 25	Cylindrical Pipe	Stainless Steel	16 inch	schedule 10	Adiabatic	
631			631, 31	Cylindrical Pipe	Stainless Steel	16 inch	schedule 10	Adiabatic	
636			636, 36	Cylindrical Pipe	Stainless Steel	24 inch	schedule 10	Adiabatic	
637			637, 93	Cylindrical Pipe	Stainless Steel	6 inch	schedule 40	Adiabatic	
638			638, 203	Cylindrical Pipe	Stainless Steel	6 inch	schedule 40	Adiabatic	

Pipe	Ambient Temp. Units	Special Condition
1		None
2		None
3		None
4		None
5		None
6		None
7		None
8		None
9		None
16		None
17		None
18		None
19		None
20		None
21		None
22		None
23		None
24		None
25		None

AFT Arrow 3.0 Input
DMJMH+N

(5 of 12)

2/21/2006 04:13 PM

AFT Arrow Model Main OGTS Case 1 (70 °F, Adiabatc, Robinson Fan Curve @ 3550 RPM)

Pipe	Ambient Temp. Units	Special Condition
26		None
27		None
28		None
29		None
30		None
31		None
32		None
33		None
35		None
36		None
37		None
38		None
39		None
40		None
41		None
42		None
43		None
50		None
51		None
52		None
53		None
54		None
55		None
60		None
61		None
62		None
63		None
64		None
65		None
66		None
67		None
68		None
69		None
70		None
80		None
81		None
82		None
83		None
84		None
90		None
91		None
92		None
93		None
94		None
100		None
101		None
102		None
103		None
200		None
201		None
202		None
203		None
204		Closed
210		None
211		None

AFT Arrow 3.0 Input (6 of 12) 2/21/2006 04:13 PM
DMJMH+N

AFT Arrow Model Main OGTS Case 1 (70 °F, Adiabatc, Robinson Fan Curve @ 3550 RPM)

Pipe	Ambient Temp. Units	Special Condition
212		None
213		None
214		None
215		None
625		None
631		None
636		None
637		None
638		Closed

Pipe Loss Table

Pipe Losses	K Total	Standard Bends	Mitre Bends	Smooth Bends	Angle Valves	Ball Valves	Butterfly Valves	Cylinder Valves	Gate Valves	Globe Valves	Plug Valves	Poppet Valves
64	0.04											
65	1.51											
66	0.37											
67	0.46			2 (0.42)								

Pipe Losses	Three-way Valves	Swing Check Valves	Lift Check Valves	Tilting Disc Check Valves	Stop Check Valves	Sharp-edged Orifice	Long Orifice	Contractions	Expansions
64									1 (0.0)
65									1 (1.51)
66								1 (0.13)	
67									

Pipe Losses	Entrances	Exits	Differential Flowmeter	Honeycomb	Screen	Tee	Add'l Loss
64						1 (0.04)	
65							
66							(0.24)
67						1 (0.04)	

Area Change Table

Area Change	Name	Object Defined	Elevation	Elevation Units	Initial Pressure	Initial Pressure Units	Database Source	Type	Geometry
3	Area Change	Yes	0	feet				Conical	Contraction
4	Area Change	Yes	0	feet				Conical	Expansion
5	Area Change	Yes	0	feet				Conical	Contraction
7	Area Change	Yes	0	feet				Conical	Contraction
39	Area Change	Yes	0	feet				Conical	Contraction
63	Area Change	Yes	0	feet				Conical	Contraction
82	Area Change	Yes	0	feet				Conical	Expansion
84	Area Change	Yes	0	feet				Conical	Expansion
212	Area Change	Yes	0	feet				Conical	Expansion
214	Area Change	Yes	0	feet				Conical	Contraction
215	Area Change	Yes	0	feet				Conical	Expansion

Area Change	Angle	Loss Factor
3	22.	0.439751
4	22.	0.1552215
5	22.	0.439751
7	11.	4.917351E-02
39	17.	0.1635637
63	11.	4.917351E-02

AFT Arrow 3.0 Input (7 of 12) 2/21/2006 04:13 PM
DMJMH+N

AFT Arrow Model Main OGTS Case 1 (70 °F, Adiabatc, Robinson Fan Curve @ 3550 RPM)

Area Change	Angle	Loss Factor
82	9.	3.155545E-02
84	18.	0.1212923
212	9.	3.155545E-02
214	18.	0.1555985
215	14.	5.570398E-02

Assigned Flow Table

Assigned Flow	Name	Object Defined	Elevation	Elevation Units	Initial Pressure	Initial Pressure Units	Database Source	Special Condition
637	Waste Feed Blower	Yes	0	feet				None
638	Assigned Flow Vac Pump	Yes	0	feet				None

Assigned Flow	Type	Flow	Flow Units	Loss Factor
637	Inflow	2682	lbm/hr	0
638	Inflow	42	lbm/hr	0

Assigned Pressure Table

Assigned Pressure	Name	Object Defined	Elevation	Elevation Units	Initial Pressure	Initial Pressure Units	Database Source	Pressure
1	Assigned Pressure	Yes	0	feet	14.30	psia		14.3
44	Assigned Pressure	Yes	0	feet	14.30	psia		14.3
50	Assigned Pressure	Yes	0	feet	14.30	psia		14.3
60	Assigned Pressure	Yes	0	feet	14.30	psia		14.3
80	Assigned Pressure	Yes	0	feet	14.30	psia		14.3
90	Assigned Pressure	Yes	0	feet	14.30	psia		14.3
100	Assigned Pressure	Yes	0	feet	14.30	psia		14.3
200	Assigned Pressure	Yes	0	feet	14.30	psia		14.3
210	Assigned Pressure	Yes	0	feet	14.30	psia		14.3

Assigned Pressure	Pressure Units	Pressure Type	Temperature	Temperature Units	Balance Energy	Balance Concentration	K Factor	(Pipe #1) K In, K Out
1	psia	Stagnation	70	deg. F	No	No	0	(P1) 0, 0
44	psia	Stagnation	70	deg. F	No	No	0	(P43) 0, 0
50	psia	Stagnation	70	deg. F	No	No	0	(P50) 0, 0
60	psia	Stagnation	70	deg. F	No	No	0	(P60) 0, 0
80	psia	Stagnation	70	deg. F	No	No	0	(P80) 0, 0
90	psia	Stagnation	70	deg. F	No	No	0	(P90) 0, 0
100	psia	Stagnation	70	deg. F	No	No	0	(P100) 0, 0
200	psia	Stagnation	70	deg. F	No	No	0	(P200) 0, 0
210	psia	Stagnation	70	deg. F	No	No	0	(P210) 0, 0

Assigned Pressure	(Pipe #2) K In, K Out	(Pipe #3) K In, K Out	(Pipe #4) K In, K Out	(Pipe #5) K In, K Out	(Pipe #6) K In, K Out	(Pipe #7) K In, K Out	(Pipe #8) K In, K Out	(Pipe #9) K In, K Out
1								
44								
50								
60								
80								
90								
100								
200								
210								

AFT Arrow 3.0 Input (8 of 12) 2/21/2006 04:13 PM
DMJMH+N

AFT Arrow Model Main OGTS Case 1 (70 °F, Adiabatc, Robinson Fan Curve @ 3550 RPM)

Assigned Pressure	(Pipe #10) K In, K Out	(Pipe #11) K In, K Out	(Pipe #12) K In, K Out	(Pipe #13) K In, K Out	(Pipe #14) K In, K Out	(Pipe #15) K In, K Out	(Pipe #16) K In, K Out	(Pipe #17) K In, K Out
1								
44								
50								
60								
80								
90								
100								
200								
210								

Assigned Pressure	(Pipe #18) K In, K Out	(Pipe #19) K In, K Out	(Pipe #20) K In, K Out	(Pipe #21) K In, K Out	(Pipe #22) K In, K Out	(Pipe #23) K In, K Out	(Pipe #24) K In, K Out	(Pipe #25) K In, K Out
1								
44								
50								
60								
80								
90								
100								
200								
210								

Branch Table

Branch	Name	Object Defined	Elevation	Elevation Units	Initial Pressure	Initial Pressure Units	Database Source	Special Condition	Boundary Flow (+ = in/- = out)
43	Branch	Yes	0	feet				None	

Branch	Boundary Flow Units	(Pipe #1) K In, K Out	(Pipe #2) K In, K Out	(Pipe #3) K In, K Out	(Pipe #4) K In, K Out	(Pipe #5) K In, K Out	(Pipe #6) K In, K Out	(Pipe #7) K In, K Out	(Pipe #8) K In, K Out
43		(P42) 0, 1	(P43) 0, 0						

Branch	(Pipe #9) K In, K Out	(Pipe #10) K In, K Out	(Pipe #11) K In, K Out	(Pipe #12) K In, K Out	(Pipe #13) K In, K Out	(Pipe #14) K In, K Out	(Pipe #15) K In, K Out	(Pipe #16) K In, K Out	(Pipe #17) K In, K Out
43									

Branch	(Pipe #18) K In, K Out	(Pipe #19) K In, K Out	(Pipe #20) K In, K Out	(Pipe #21) K In, K Out	(Pipe #22) K In, K Out	(Pipe #23) K In, K Out	(Pipe #24) K In, K Out	(Pipe #25) K In, K Out
43								

Compressor/Fan Table

Compressor/Fan	Name	Object Defined	Elevation	Elevation Units	Initial Pressure	Initial Pressure Units	Database Source	Special Condition
40	Fan N31-025	Yes	0	feet				None

Compressor/Fan	Pump Type	Design Flow Rate	Design Flow Rate Units	Current Configuration	Independent Variable	Ind. Variable Units	Dependent Variable
40	Comp./Fan Curve				Vol. Flow Rate	ft3/min	Pressure Loss

Compressor/Fan	Dep. Variable Units	Comp./Fan Curve Constant a	Comp./Fan Curve Constant b	Comp./Fan Curve Constant c	Comp./Fan Curve Constant d	Comp./Fan Curve Constant e
40	in. H2O std.	114.7023	4.038226E-03	-3.200603E-07	0	0

Compressor/Fan	Runout Flow Rate	Runout Flow Rate Units	Added Press. Type	Speed	Control Discharge	Control Discharge Units	Control When Exceeded Only	Compression Process
40			Stagnation	100				Adiabatic

Control Valve Table

AFT Arrow 3.0 Input (9 of 12) 2/21/2006 04:13 PM
DMJMH+N

AFT Arrow Model Main OGTS Case 1 (70 °F, Adiabatc, Robinson Fan Curve @ 3550 RPM)

Control Valve	Name	Object Defined	Elevation	Elevation Units	Initial Pressure	Initial Pressure Units	Database Source	Special Condition	Valve Type	Control Setting
92	FV-016	Yes	0	feet				None	FCV	8320
102	HV-504	Yes	0	feet				None	FCV	10723

Control Valve	Control Units	Pressure/ Head Type	Close Type	Full Open Loss Type	Full Open Loss	Full Open Xt
92	lbm/hr	N/A	Fail Open	None		
102	lbm/hr	N/A	Open (Close on Reverse Flow)	Cv	8300	Cv

Dead End Table

Dead End	Name	Object Defined	Elevation	Elevation Units	Initial Pressure	Initial Pressure Units	Database Source
625	Dead End	Yes	0	feet			
631	Dead End	Yes	0	feet			
636	Dead End	Yes	0	feet			

General Component Table

General Component	Name	Object Defined	Elevation	Elevation Units	Initial Pressure	Initial Pressure Units	Database Source
2	ICV Filter N02-010	Yes	0	feet			
19	Packed Tower	Yes	0	feet			
20	Venturi/Demister	Yes	0	feet			
22	Condenser Demister	Yes	0	feet			
27	HEPA	Yes	0	feet			
29	HEGA	Yes	0	feet			
51	AWTE Filter N22-026	Yes	0	feet			
53	AWTE	Yes	0	feet			
61	SMF Dilution Filter N02-049	Yes	0	feet			
66	SMF N02-019	Yes	0	feet			
69	SMF N02-020	Yes	0	feet			
81	WRS Tank Filter	Yes	0	feet			
91	WSS Filter N02-101/102	Yes	0	feet			
101	SCR Filter N02-022	Yes	0	feet			
201	WSS Filter N02-093	Yes	0	feet			
211	SWS Tank Filter N02-014A	Yes	0	feet			

General Component	Special Condition	Loss Model	Loss Value	Independent Variable	Ind. Variable Units	Dependent Variable	Dep. Variable Units
2	None	General Polynomial	Variable	Vol. Flow Rate	ft3/min	Pressure Loss	in. H2O std.
19	None	General Polynomial	Variable	Vol. Flow Rate	ft3/min	Pressure Loss	in. H2O std.
20	None	General Polynomial	Variable	Vol. Flow Rate	ft3/min	Pressure Loss	in. H2O std.
22	None	General Polynomial	Variable	Vol. Flow Rate	ft3/min	Pressure Loss	in. H2O std.
27	None	General Polynomial	Variable	Vol. Flow Rate	ft3/min	Pressure Loss	in. H2O std.
29	None	General Polynomial	Variable	Vol. Flow Rate	ft3/min	Pressure Loss	in. H2O std.
51	None	General Polynomial	Variable	Vol. Flow Rate	ft3/min	Pressure Loss	in. H2O std.
53	None	K Constant	1.5				
61	None	General Polynomial	Variable	Vol. Flow Rate	ft3/min	Pressure Loss	in. H2O std.
66	None	General Polynomial	Variable	Vol. Flow Rate	ft3/min	Pressure Loss	in. H2O std.
69	None	General Polynomial	Variable	Vol. Flow Rate	ft3/min	Pressure Loss	in. H2O std.
81	None	General Polynomial	Variable	Vol. Flow Rate	ft3/min	Pressure Loss	in. H2O std.
91	None	General Polynomial	Variable	Vol. Flow Rate	ft3/min	Pressure Loss	in. H2O std.
101	None	General Polynomial	Variable	Vol. Flow Rate	ft3/min	Pressure Loss	in. H2O std.
201	None	General Polynomial	Variable	Vol. Flow Rate	ft3/min	Pressure Loss	in. H2O std.
211	None	General Polynomial	Variable	Vol. Flow Rate	ft3/min	Pressure Loss	in. H2O std.

AFT Arrow 3.0 Input (10 of 12) 2/21/2006 04:13 PM
DMJMH+N

AFT Arrow Model Main OGTS Case 1 (70 °F, Adiabatc, Robinson Fan Curve @ 3550 RPM)

General Component	Loss Constant a	Loss Constant b	Loss Constant c	Loss Constant d	Loss Constant e
2	-1.165517E-17	0.00224	0	0	0
19	-1.168011E-15	3.346839E-18	3.901916E-07	0	0
20	-1.340247E-14	2.646809E-17	3.506383E-06	0	0
22	2.862294E-17	2.179133E-03	0	0	0
27	-3.989864E-17	9.394737E-04	0	0	0
29	-3.642919E-17	8.496176E-04	0	0	0
51	-1.479936E-17	0.00568	0	0	0
53					
61	-1.165517E-17	0.00112	0	0	0
66	-3.328501E-17	0.0032	0	0	0
69	-3.328501E-17	0.0032	0	0	0
81	-3.610393E-17	0.0325	0	0	0
91	-1.165517E-17	0.00112	0	0	0
101	-7.29126E-18	0.000175	0	0	0
201	-1.165517E-17	0.0056	0	0	0
211	-3.610393E-17	0.0325	0	0	0

Heat Exchanger Table

Heat Exchanger	Name	Object Defined	Elevation	Elevation Units	Initial Pressure	Initial Pressure Units	Database Source	Special Condition	Type
6	ICV	Yes	0	feet				Open	
23	WSS Heater	Yes	0	feet				Open	
34	SCR	Yes	0	feet				Open	

Heat Exchanger	Loss Model	Loss Value	Independent Variable	Ind. Variable Units	Dependent Variable	Dep. Variable Units	Loss Constant a
6	K Constant	1.5					
23	General Polynomial	Variable	Vol. Flow Rate	ft3/min	Pressure Loss	in. H2O std.	-2.633527E-16
34	General Polynomial	Variable	Vol. Flow Rate	ft3/min	Pressure Loss	in. H2O std.	-1.041701E-15

Heat Exchanger	Loss Constant b	Loss Constant c	Loss Constant d	Loss Constant e
6				
23	5.437952E-19	1.75338E-07	0	0
34	2.600104E-03	0	0	0

Tee or Wye Table

Tee or Wye	Name	Object Defined	Elevation	Elevation Units	Initial Pressure	Initial Pressure Units	Database Source	Tee/Wye Type	Loss Type
16	Tee or Wye	Yes	0	feet				Round Straight	Detailed
21	Tee or Wye	Yes	0	feet				Round Straight	Detailed
25	Tee or Wye	Yes	0	feet				Round Straight	Detailed
31	Tee or Wye	Yes	0	feet				Round Straight	Detailed
33	Tee or Wye	Yes	0	feet				Round Straight	Detailed
36	Tee or Wye	Yes	0	feet				Round Straight	Detailed
55	Tee or Wye	Yes	0	feet				Round Straight	Detailed
64	Tee or Wye	Yes	0	feet				Round Straight	Detailed
93	Tee or Wye	Yes	0	feet				Round Straight	Detailed
94	Tee or Wye	Yes	0	feet				Round Straight	Detailed
203	Tee or Wye	Yes	0	feet				Round Straight	Detailed
204	Tee or Wye	Yes	0	feet				Round Straight	Detailed

AFT Arrow 3.0 Input (11 of 12) 2/21/2006 04:13 PM
DMJMH+N

AFT Arrow Model Main OGTS Case 1 (70 °F, Adiabatc, Robinson Fan Curve @ 3550 RPM)

Tee or Wye	Angle	Pipes A, B, C
16	30	
21	90	
25	135	
31	45	
33	45	
36	145	
55	45	
64	45	
93	30	
94	30	
203	45	
204	45	

Valve Table

Valve	Name	Object Defined	Elevation	Elevation Units	Initial Pressure	Initial Pressure Units	Database Source	Special Condition	Exit Valve
8	HV-114	Yes	0	feet				None	No
9	HV-115	Yes	0	feet				None	No
17	36-V-049	Yes	0	feet				None	No
18	HV-125	Yes	0	feet				None	No
24	WSS Valve V-072	Yes	0	feet				None	No
26	HV-313	Yes	0	feet				None	No
28	HV-314a	Yes	0	feet				None	No
30	HV-314b	Yes	0	feet				None	No
32	36-V-017	Yes	0	feet				None	No
37	HV-525	Yes	0	feet				None	No
38	36-V-024	Yes	0	feet				None	No
41	36-V-080	Yes	0	feet				None	No
42	HV-526	Yes	0	feet				None	No
52	HV-111	Yes	0	feet				None	No
54	HV-113	Yes	0	feet				None	No
62	TV-014	Yes	0	feet				Closed	No
65	HV-002	Yes	0	feet				None	No
67	HV-003	Yes	0	feet				None	No
68	HV-004	Yes	0	feet				None	No
70	HV-005	Yes	0	feet				None	No
83	32-V-003	Yes	0	feet			Ball PO=100 (C)	Closed	No
103	36-V-019	Yes	0	feet				None	No
202	FV-331	Yes	0	feet				Closed	No
213	37-V-004	Yes	0	feet			Ball PO=100 (C)	Closed	No

Valve	Exit Pressure	Exit Pressure Units	CdA	CdA Units	Loss Model	Loss Value	Independent Variable	Ind. Variable Units	Dependent Variable	Dep. Variable Units
8					Cv Constant	1194				
9					Cv Constant	1194				
17					Cv Constant	10040				
18					Cv Constant	10040				
24					Cv Constant	10040				
26					Cv Constant	10040				
28					K Constant	0.19				
30					K Constant	0.19				
32					Cv Constant	10040				
37					Cv Constant	21660				
38					Cv Constant	21660				
41					Cv Constant	15430				

AFT Arrow 3.0 Input (12 of 12) 2/21/2006 04:13 PM
DMJMH+N

AFT Arrow Model Main OGTS Case 1 (70 °F, Adiabatc, Robinson Fan Curve @ 3550 RPM)

Valve	Exit Pressure	Exit Pressure Units	CdA	CdA Units	Loss Model	Loss Value	Independent Variable	Ind. Variable Units	Dependent Variable	Dep. Variable Units
42					Cv Constant	15430				
52					Cv Constant	425				
54					Cv Constant	425				
62					Cv Constant	80				
65					Cv Constant	1194				
67					Cv Constant	1194				
68					Cv Constant	1194				
70					Cv Constant	1194				
83					K Constant	0.056598				
103					Cv Constant	8300				
202					Cv Constant	35				
213					K Constant	0.056598				

Valve	Loss Constant a	Loss Constant b	Loss Constant c	Loss Constant d	Loss Constant e
8					
9					
17					
18					
24					
26					
28					
30					
32					
37					
38					
41					
42					
52					
54					
62					
65					
67					
68					
70					
83					
103					
202					
213					

Title: AFT Arrow Model Main OGTS Case 1 (70 °F, Adiabatc, Robinson Fan Curve @ 3550 RPM)
Analysis run on: 2/21/2006 4:11:27 PM
Application version: AFT Arrow Version 3.0 (2005.09.14)
Input File: C:\AFT Products\AFT Arrow\DBVS-OGTS-R2.aro

Execution Time= 4.02 seconds
Total Number Of Pressure Iterations= 799
Total Number Of Flow Iterations= 77
Total Number Of Enthalpy Iterations= 77
Number Of Pipes= 83
Number Of Junctions= 84
Matrix Method= Gaussian Elimination

Length March Solution Method with Mach Number Limits
Segments Per Pipe= 2
Mach Number Increment= 0.01
Pressure Tolerance= 0.0001 relative change
Mass Flow Rate Tolerance= 0.0001 relative change
Enthalpy Tolerance= 0.0001 relative change
Flow Relaxation= (Automatic)
Pressure Relaxation= (Automatic)
Resistance Relaxation= (Automatic)

Fluid Database: AFT Standard
Fluid: Air
Max Fluid Temperature Data= 1000 deg. K
Min Fluid Temperature Data= 200 deg. K
Molecular Weight =28.97 amu
Gas Constant =0.06855 Btu/lbm-R
Critical Pressure =37.25 atm
Critical Temperature =132.41 deg. K
Acentric Factor =0.021
Equation of State= Redlich-Kwong
Enthalpy Model= Generalized
Specific Heat Ratio Accuracy = High
Atmospheric Pressure= 14.3 psia
Gravitational Acceleration= 1 g
Standard Pressure= 14.696 psia
Standard Temperature= 60 deg. F
Turbulent Flow Above Reynolds Number= 4000
Laminar Flow Below Reynolds Number= 2300
Total Inflow= 7.183 lbm/sec
Total Outflow= 7.183 lbm/sec
Total Energy Inflow= 1,599 Btu/s
Total Energy Outflow= 1,599 Btu/s
Total Heat Transferred Into System= 0.000 Btu/s
Maximum Pressure is 15.09 psia at Junction 213 Outlet
Minimum Pressure is 8.880 psia at Junction 40 Inlet
Maximum Static Temperature is 182.8 deg. F at Junction 40 Outlet
Minimum Static Temperature is 69.88 deg. F at Junction 103 Outlet

Compressor/Fan Summary

Jct	Name	Mass Flow (lbm/hr)	Vol. Flow (ft3/min)	DP Stag. (in. H2O std.)	DP Static (in. H2O std.)	Overall Efficiency (Percent)	Speed (Percent)	Overall Power (hp)	Comp. Ratio (Percent)	BEP Q (ft3/sec)
40	Fan N31-025	25,853	9,502	150.6	151.2	67.00	100.0	279.6	161.0	N/A

Jct	BEP Mass (lbm/sec)	% of BEP (Percent)
40	N/A	N/A

Valve Summary

AFT Arrow 3.0 Output (2 of 13) 2/21/2006
DMJMH+N

AFT Arrow Model Main OGTS Case 1 (70 °F, Adiabatc, Robinson Fan Curve @ 3550 RPM)

Jct	Name	Valve Type	Mass Flow (lbm/sec)	DP Stag (psid)	DP Static (psid)	P Static Inlet (psia)	K	Valve State	Cv
8	HV-114	REGULAR	0.6786	0.034123	0.014953	13.702	0.9268	Open	1,194.00
9	HV-115	REGULAR	0.6786	0.015181	0.015201	13.685	0.8586	Open	1,194.00
17	36-V-049	REGULAR	4.1982	0.009073	0.009084	12.863	0.5686	Open	10,040.00
18	HV-125	REGULAR	4.1982	0.009344	0.009356	12.854	0.5767	Open	10,040.00
24	WSS Valve V-072	REGULAR	4.1982	0.011794	0.011818	10.159	0.5761	Open	10,040.00
26	HV-313	REGULAR	4.1982	0.012017	0.012042	10.137	0.5809	Open	10,040.00
28	HV-314a	REGULAR	4.1982	0.004077	0.004086	9.800	0.1900	Open	N/A
30	HV-314b	REGULAR	4.1982	0.004079	0.004088	9.796	0.1900	Open	N/A
32	36-V-017	REGULAR	4.1982	0.012528	0.012556	9.788	0.5828	Open	10,040.00
37	HV-525	REGULAR	7.1813	0.008056	0.008068	8.933	0.6157	Open	21,660.00
38	36-V-024	REGULAR	7.1813	0.008293	0.008306	8.925	0.6242	Open	21,660.00
41	36-V-080	REGULAR	7.1813	0.012667	0.012686	14.327	0.6001	Open	15,430.00
42	HV-526	REGULAR	7.1813	0.012861	0.012880	14.314	0.6044	Open	15,430.00
52	HV-111	REGULAR	0.4654	0.054953	0.055119	13.985	1.3121	Open	425.00
54	HV-113	REGULAR	0.4654	0.055633	0.055805	13.813	1.3121	Open	425.00
X62	TV-014	REGULAR	0.0000	N/A	N/A	14.300	N/A	Closed By User	80.00
65	HV-002	REGULAR	1.1436	0.143350	0.042969	13.507	1.3544	Open	1,194.00
67	HV-003	REGULAR	1.1436	0.044489	0.044665	13.251	0.8594	Open	1,194.00
68	HV-004	REGULAR	1.1436	0.044850	0.045029	13.179	0.8605	Open	1,194.00
70	HV-005	REGULAR	1.1436	0.070104	0.070185	13.009	4.7166	Open	1,194.00
X83	32-V-003	REGULAR	0.0000	N/A	N/A	14.300	N/A	Closed By User	N/A
92	FV-016	FCV	2.3111	1.282218	1.283353	14.162	112.6340	Open	N/A
102	HV-504	FCV	2.9786	4.429036	4.434857	14.239	344.3002	Open	8,300.00
103	36-V-019	REGULAR	2.9786	0.009129	0.009147	9.804	0.4939	Open	8,300.00
X202	FV-331	REGULAR	0.0000	N/A	N/A	14.300	N/A	Closed By User	35.00
X213	37-V-004	REGULAR	0.0000	N/A	N/A	14.300	N/A	Closed By User	N/A

Jct	Cv Est.
8	N/A
9	N/A
17	N/A
18	N/A
24	N/A
26	N/A
28	16,708.4
30	16,708.4
32	N/A
37	N/A
38	N/A
41	N/A
42	N/A
52	N/A
54	N/A
X62	N/A
65	N/A
67	N/A
68	N/A
70	N/A
X83	N/A
92	461.4
102	N/A
103	N/A
X202	N/A

AFT Arrow 3.0 Output (3 of 13) 2/21/2006
DMJMH+N

AFT Arrow Model Main OGTS Case 1 (70 °F, Adiabatc, Robinson Fan Curve @ 3550 RPM)

Jct	Cv Est.
X213	N/A

Heat Exchanger Summary

Jct	Name	Mass Flow (lbm/sec)	DPo (psid)	DP (psid)	DT Loss (deg. F)	T Inlet (deg. F)	T Outlet (deg. F)	Heat Rate In (Btu/s)
6	ICV	0.6786	0.1352	0.06248	-0.77808	69.02	69.80	0
23	WSS Heater	4.1982	0.1451	0.14535	0.01239	69.65	69.64	0
34	SCR	7.1813	0.8136	0.80135	-0.14667	69.52	69.66	0

Pipe Output Table

Pipe	Name	Mass Flow (lbm/hr)	Vel. In (feet/sec)	Vel. Out (feet/sec)	Mach # In	Mach # Out	dP Stag. Total (in. H2O std.)	P Stag. In (in. H2O std. (g))	P Stag. Out (in. H2O std. (g))
1	Pipe	2,443	46.428	46.602	0.041299	0.041453	1.470625	0.00000	-1.470625
2	Pipe	2,443	46.751	46.809	0.041586	0.041638	0.485809	-2.72719	-3.212995
3	Pipe	2,443	106.672	108.518	0.094954	0.096601	6.618433	-3.42099	-10.039420
4	Pipe	2,443	47.686	47.712	0.042418	0.042441	0.206989	-10.42568	-10.632670
5	Pipe	2,443	108.747	108.819	0.096805	0.096869	0.252685	-10.84468	-11.097360
6	Pipe	2,443	48.239	48.258	0.042911	0.042927	0.146194	-14.84051	-14.986707
7	Pipe	2,443	69.763	69.860	0.062069	0.062155	0.525908	-15.01068	-15.536584
8	Pipe	2,443	48.448	48.454	0.043096	0.043101	0.043267	-16.48112	-16.524384
9	Pipe	2,443	48.508	48.530	0.043149	0.043169	0.175417	-16.94462	-17.120035
16	Pipe	15,114	48.026	48.059	0.042718	0.042747	0.243366	-39.06957	-39.312935
17	Pipe	15,114	48.093	48.095	0.042778	0.042779	0.012434	-39.56406	-39.576496
18	Pipe	15,114	48.130	48.138	0.042810	0.042818	0.061033	-39.83514	-39.896179
19	Pipe	15,114	48.932	48.948	0.043525	0.043538	0.108233	-45.66622	-45.774456
20	Pipe	15,114	57.819	57.834	0.051432	0.051445	0.077136	-99.38476	-99.461891
21	Pipe	15,114	57.834	57.848	0.051445	0.051458	0.070721	-99.46189	-99.532616
22	Pipe	15,114	59.889	59.904	0.053274	0.053288	0.074364	-109.60276	-109.677124
23	Pipe	15,114	60.759	60.835	0.054048	0.054116	0.351177	-113.69239	-114.043571
24	Pipe	15,114	60.906	60.906	0.054179	0.054179	0.002825	-114.37003	-114.372864
25	Pipe	15,114	60.946	60.967	0.054215	0.054234	0.097146	-114.55622	-114.653366
26	Pipe	15,114	61.040	61.057	0.054298	0.054314	0.080436	-114.98602	-115.066452
27	Pipe	15,114	62.073	62.094	0.055218	0.055236	0.090282	-119.64875	-119.739037
28	Pipe	15,114	63.059	63.060	0.056095	0.056096	0.003485	-123.95342	-123.956909
29	Pipe	15,114	63.086	63.087	0.056119	0.056120	0.003511	-124.06976	-124.073273
30	Pipe	15,114	63.113	63.116	0.056143	0.056146	0.014018	-124.18618	-124.200195
31	Pipe	15,114	63.116	63.140	0.056146	0.056167	0.101238	-124.20020	-124.301437
32	Pipe	15,114	63.221	63.247	0.056239	0.056263	0.110952	-124.64820	-124.759155
33	Pipe	25,853	69.061	69.152	0.061440	0.061520	0.354767	-124.93027	-125.285034
35	Pipe	25,853	52.236	52.313	0.046464	0.046533	0.365828	-147.80612	-148.171951
36	Pipe	25,853	52.313	52.314	0.046533	0.046533	0.004673	-148.17195	-148.176620
37	Pipe	25,853	52.362	52.363	0.046575	0.046576	0.003854	-148.39961	-148.403458
38	24" Sch 10	25,853	52.411	52.413	0.046620	0.046621	0.008051	-148.63303	-148.641068
39	EJ-604	25,853	93.433	93.485	0.083147	0.083193	0.137087	-148.70213	-148.839218
40	EJ-605	25,853	57.059	57.113	0.046104	0.046148	0.375384	1.71238	1.336997
41	EJ-605	25,853	57.164	57.165	0.046189	0.046189	0.004197	0.98637	0.982177
42	EJ-605	25,853	57.216	57.217	0.046231	0.046231	0.004197	0.62617	0.621971
43	Stack	25,853	9.509	9.510	0.007682	0.007683	0.024286	0.03400	0.009715
50	Pipe	1,675	72.341	73.146	0.064364	0.065081	4.340441	0.00000	-4.340441
51	Pipe	1,675	73.562	73.752	0.065451	0.065621	1.000550	-6.54420	-7.544751
52	Pipe	1,675	74.043	74.166	0.065880	0.065989	0.635698	-9.06590	-9.701601

AFT Arrow 3.0 Output (4 of 13) 2/21/2006
DMJMH+N

AFT Arrow Model Main OGTS Case 1 (70 °F, Adiabatc, Robinson Fan Curve @ 3550 RPM)

Pipe	Name	Mass Flow (lbm/hr)	Vel. In (feet/sec)	Vel. Out (feet/sec)	Mach # In	Mach # Out	dP Stag. Total (in. H2O std.)	P Stag. In (in. H2O std. (g))	P Stag. Out (in. H2O std. (g))
53	Pipe	1,675	74.505	74.669	0.066291	0.066437	0.844773	-11.45102	-12.295792
54	Pipe	1,675	74.972	75.383	0.066707	0.067072	2.073141	-13.83574	-15.908879
55	Pipe	4,117	118.736	118.860	0.105715	0.105826	0.390695	-17.38251	-17.773209
60	Pipe	0	0.000	0.000	0.000000	0.000000	0.000000	0.00000	0.000000
61	Pipe	0	0.000	0.000	0.000000	0.000000	0.000000	0.00000	0.000000
62	Pipe	0	0.000	0.000	0.000000	0.000000	0.000000	-18.63493	-18.634930
63	Pipe	0	0.000	0.000	0.000000	0.000000	0.000000	-18.63493	-18.634930
64	Pipe	4,117	119.140	119.256	0.106075	0.106179	0.363479	-18.65072	-19.014194
65	Pipe	4,117	28.126	28.144	0.025015	0.025032	0.250784	-22.98223	-23.233019
66	Pipe	4,117	84.002	84.267	0.074749	0.074986	1.157937	-26.43308	-27.591015
67	Pipe	4,117	84.551	84.729	0.075239	0.075397	0.763625	-28.82253	-29.586149
68	Pipe	4,117	85.018	85.277	0.075655	0.075885	1.102368	-30.82764	-31.930004
69	Pipe	4,117	45.536	45.549	0.040505	0.040516	0.103534	-35.21494	-35.318470
70	8" Sch 10	4,117	45.796	45.978	0.040736	0.040897	1.414185	-37.25901	-38.673195
80	Pipe	0	0.000	0.000	0.000000	0.000000	0.000000	0.00000	0.000000
81	Pipe	0	0.000	0.000	0.000000	0.000000	0.000000	0.00000	0.000000
82	Pipe	0	0.000	0.000	0.000000	0.000000	0.000000	0.00000	0.000000
83	Pipe	0	0.000	0.000	0.000000	0.000000	0.000000	-39.16120	-39.161198
84	3" Sch 40	0	0.000	0.000	0.000000	0.000000	0.000000	-39.16120	-39.161198
90	Pipe	8,320	37.876	37.963	0.033690	0.033767	0.911482	0.00000	-0.911482
91	Pipe	8,320	38.170	38.216	0.033951	0.033992	0.467911	-3.04750	-3.515414
92	12" Sch 10	8,320	42.021	42.067	0.037377	0.037418	0.392200	-39.00806	-39.400261
93	Pipe	11,002	55.631	55.632	0.049485	0.049486	0.004620	-39.18791	-39.192532
94	Pipe	11,002	55.632	55.635	0.049486	0.049488	0.017766	-39.19253	-39.210297
100	Pipe	10,723	40.376	40.450	0.035914	0.035979	0.721308	0.00000	-0.721308
101	Pipe	10,723	40.494	40.513	0.036019	0.036036	0.185792	-1.15128	-1.337076
102	Pipe	10,723	58.818	58.819	0.052323	0.052324	0.004831	-123.93574	-123.940567
103	14" Sch 10	10,723	58.874	58.914	0.052373	0.052409	0.186319	-124.19325	-124.379570
200	Pipe	0	0.000	0.000	0.000000	0.000000	0.000000	0.00000	0.000000
201	Pipe	0	0.000	0.000	0.000000	0.000000	0.000000	0.00000	0.000000
202	Pipe	0	0.000	0.000	0.000000	0.000000	No Solution	No Solution	No Solution
203	Pipe	0	0.000	0.000	0.000000	0.000000	0.000000	19.79171	19.791706
X204	Pipe	0	0.000	0.000	0.000000	0.000000	80.066078	-19.39581	-99.461891
210	Pipe	0	0.000	0.000	0.000000	0.000000	0.000000	0.00000	0.000000
211	Pipe	0	0.000	0.000	0.000000	0.000000	0.000000	0.00000	0.000000
212	Pipe	0	0.000	0.000	0.000000	0.000000	0.000000	0.00000	0.000000
213	Pipe	0	0.000	0.000	0.000000	0.000000	No Solution	No Solution	No Solution
214	Pipe	0	0.000	0.000	0.000000	0.000000	No Solution	No Solution	No Solution
215	Pipe	0	0.000	0.000	0.000000	0.000000	No Solution	No Solution	No Solution
625	Pipe	0	0.000	0.000	0.000000	0.000000	0.000000	-114.38070	-114.380699
631	Pipe	0	0.000	0.000	0.000000	0.000000	0.000000	-124.21120	-124.211205
636	Pipe	0	0.000	0.000	0.000000	0.000000	0.000000	-148.13695	-148.136948
637	Pipe	2,682	56.522	56.525	0.050267	0.050270	0.022703	-38.54910	-38.571800
X638	Pipe	0	0.000	0.000	0.000000	0.000000	No Solution	No Solution	19.791706

Pipe	P Static In (in. H2O std. (g))	P Static Out (in. H2O std. (g))	dT Stag. (deg. F)	T Stag. Inlet (deg. F)	T Stag. Outlet (deg. F)	T Static In (deg. F)	T Static Out (deg. F)	dH Stag. (Btu/lbm)	H Stag. In (Btu/lbm)	H Stag. Out (Btu/lbm)
1	-0.46934	-1.941730	-0.00079346	70.00	70.00	69.82	69.82	0.000E+00	195.1	195.1
2	-3.19980	-3.686185	-0.00048828	70.00	70.00	69.82	69.82	0.000E+00	195.1	195.1
3	-5.87268	-12.533747	-0.00646973	70.00	69.99	69.06	69.02	0.000E+00	195.1	195.1
4	-10.90774	-11.114994	-0.00018311	69.99	69.99	69.80	69.80	0.000E+00	195.1	195.1
5	-13.34431	-13.598656	-0.00024414	69.99	69.99	69.02	69.02	0.000E+00	195.1	195.1
6	-15.32820	-15.474574	-0.00012207	69.99	69.99	69.80	69.79	0.000E+00	195.1	195.1
7	-16.02965	-16.556986	-0.00054932	69.99	69.98	69.59	69.58	0.000E+00	195.1	195.1

AFT Arrow 3.0 Output (5 of 13) 2/21/2006
DMJMH+N

AFT Arrow Model Main OGTS Case 1 (70 °F, Adiabatc, Robinson Fan Curve @ 3550 RPM)

Pipe	P Static In (in. H2O std. (g))	P Static Out (in. H2O std. (g))	dT Stag. (deg. F)	T Stag. Inlet (deg. F)	T Stag. Outlet (deg. F)	T Static In (deg. F)	T Static Out (deg. F)	dH Stag. (Btu/lbm)	H Stag. In (Btu/lbm)	H Stag. Out (Btu/lbm)
8	-16.97091	-17.014231	-0.00006104	69.98	69.98	69.79	69.79	0.000E+00	195.1	195.1
9	-17.43499	-17.610649	-0.00012207	69.98	69.98	69.79	69.79	0.000E+00	195.1	195.1
16	-39.52217	-39.765823	-0.00018311	70.02	70.02	69.83	69.83	0.000E+00	195.1	195.1
17	-40.01730	-40.029728	0.00000000	70.01	70.01	69.83	69.83	0.000E+00	195.1	195.1
18	-40.28872	-40.349834	-0.00006104	70.01	70.01	69.82	69.82	0.000E+00	195.1	195.1
19	-46.12737	-46.235741	-0.00012207	70.01	70.01	69.81	69.81	0.000E+00	195.1	195.1
20	-99.92975	-100.007019	-0.00006104	69.96	69.96	69.68	69.68	0.000E+00	195.1	195.1
21	-100.00702	-100.077873	-0.00006104	69.96	69.96	69.68	69.68	0.000E+00	195.1	195.1
22	-110.16729	-110.241783	-0.00006104	69.95	69.95	69.65	69.65	0.000E+00	195.1	195.1
23	-114.26513	-114.617020	-0.00036621	69.94	69.94	69.64	69.64	0.000E+00	195.1	195.1
24	-114.94418	-114.946999	0.00000000	69.94	69.94	69.64	69.64	0.000E+00	195.1	195.1
25	-115.13073	-115.228088	-0.00012207	69.94	69.94	69.64	69.64	0.000E+00	195.1	195.1
26	-115.56142	-115.642014	-0.00006104	69.94	69.94	69.64	69.64	0.000E+00	195.1	195.1
27	-120.23390	-120.324364	-0.00006104	69.94	69.94	69.62	69.62	0.000E+00	195.1	195.1
28	-124.54789	-124.551376	0.00000000	69.93	69.93	69.61	69.61	0.000E+00	195.1	195.1
29	-124.66447	-124.667999	0.00000000	69.93	69.93	69.61	69.61	0.000E+00	195.1	195.1
30	-124.78114	-124.795189	0.00000000	69.93	69.93	69.61	69.61	0.000E+00	195.1	195.1
31	-124.79519	-124.896667	-0.00012207	69.93	69.93	69.61	69.61	0.000E+00	195.1	195.1
32	-125.24420	-125.355385	-0.00012207	69.93	69.93	69.60	69.60	0.000E+00	195.1	195.1
33	-125.64063	-125.996338	-0.00036621	69.91	69.91	69.52	69.52	0.000E+00	195.1	195.1
35	-148.17836	-148.544739	-0.00030518	69.89	69.89	69.66	69.66	0.000E+00	195.1	195.1
36	-148.54474	-148.549423	0.00000000	69.89	69.89	69.66	69.66	0.000E+00	195.1	195.1
37	-148.77275	-148.776596	0.00000000	69.89	69.89	69.66	69.66	0.000E+00	195.1	195.1
38	-149.00650	-149.014587	0.00000000	69.89	69.89	69.66	69.66	0.000E+00	195.1	195.1
39	-149.88734	-150.025085	-0.00012207	69.89	69.89	69.17	69.17	0.000E+00	195.1	195.1
40	1.12570	0.749766	-0.00024414	182.80	182.79	182.53	182.53	0.000E+00	222.6	222.6
41	0.39861	0.394418	0.00000000	182.79	182.79	182.53	182.53	0.000E+00	222.6	222.6
42	0.03788	0.033684	0.00000000	182.79	182.79	182.53	182.53	0.000E+00	222.6	222.6
43	0.01777	-0.006520	0.00000000	182.79	182.79	182.79	182.79	0.000E+00	222.6	222.6
50	-1.13875	-5.491884	-0.00360107	70.00	70.00	69.57	69.56	0.000E+00	195.1	195.1
51	-7.70222	-8.705776	-0.00097656	69.99	69.99	69.55	69.55	0.000E+00	195.1	195.1
52	-10.23152	-10.869146	-0.00067139	69.99	69.99	69.54	69.54	0.000E+00	195.1	195.1
53	-12.62390	-13.471283	-0.00079346	69.99	69.99	69.53	69.53	0.000E+00	195.1	195.1
54	-15.01601	-17.095617	-0.00201416	69.99	69.99	69.53	69.52	0.000E+00	195.1	195.1
55	-20.31051	-20.704296	-0.00036621	69.98	69.98	68.83	68.82	0.000E+00	195.1	195.1
60	0.00000	0.000000	0.00000000	70.00	70.00	70.00	70.00	0.000E+00	195.1	195.1
61	0.00000	0.000000	0.00000000	70.00	70.00	70.00	70.00	0.000E+00	195.1	195.1
62	-18.63493	-18.634930	0.00000000	69.98	69.98	69.98	69.98	0.000E+00	195.1	195.1
63	-18.63493	-18.634930	0.00000000	69.98	69.98	69.98	69.98	0.000E+00	195.1	195.1
64	-21.58872	-21.955103	-0.00030518	69.98	69.98	68.82	68.81	0.000E+00	195.1	195.1
65	-23.14453	-23.395422	-0.00024414	69.98	69.98	69.91	69.91	0.000E+00	195.1	195.1
66	-27.86551	-29.027983	-0.00115967	69.97	69.97	69.40	69.39	0.000E+00	195.1	195.1
67	-30.26438	-31.031010	-0.00079346	69.97	69.97	69.39	69.38	0.000E+00	195.1	195.1
68	-32.27746	-33.384262	-0.00103760	69.97	69.97	69.38	69.37	0.000E+00	195.1	195.1
69	-35.62627	-35.729912	-0.00012207	69.97	69.97	69.80	69.80	0.000E+00	195.1	195.1
70	-37.67270	-39.088520	-0.00140381	69.96	69.96	69.79	69.79	0.000E+00	195.1	195.1
80	0.00000	0.000000	0.00000000	70.00	70.00	70.00	70.00	0.000E+00	195.1	195.1
81	0.00000	0.000000	0.00000000	70.00	70.00	70.00	70.00	0.000E+00	195.1	195.1
82	0.00000	0.000000	0.00000000	70.00	70.00	70.00	70.00	0.000E+00	195.1	195.1
83	-39.16120	-39.161198	0.00000000	70.04	70.04	70.04	70.04	0.000E+00	195.1	195.1
84	-39.16120	-39.161198	0.00000000	70.04	70.04	70.04	70.04	0.000E+00	195.1	195.1
90	-0.31240	-1.224619	-0.00024414	70.00	70.00	69.88	69.88	0.000E+00	195.1	195.1
91	-3.36233	-3.830610	-0.00042725	70.00	70.00	69.88	69.88	0.000E+00	195.1	195.1
92	-39.35467	-39.747265	-0.00042725	69.96	69.96	69.82	69.82	0.000E+00	195.1	195.1

AFT Arrow 3.0 Output (6 of 13) 2/21/2006
DMJMH+N

AFT Arrow Model Main OGTS Case 1 (70 °F, Adiabatc, Robinson Fan Curve @ 3550 RPM)

Pipe	P Static In (in. H2O std. (g))	P Static Out (in. H2O std. (g))	dT Stag. (deg. F)	T Stag. Inlet (deg. F)	T Stag. Outlet (deg. F)	T Static In (deg. F)	T Static Out (deg. F)	dH Stag. (Btu/lbm)	H Stag. In (Btu/lbm)	H Stag. Out (Btu/lbm)
93	-39.79489	-39.799507	0.00000000	70.04	70.04	69.78	69.78	0.000E+00	195.1	195.1
94	-39.79951	-39.817299	0.00000000	70.04	70.04	69.78	69.78	0.000E+00	195.1	195.1
100	-0.35498	-1.076947	-0.00006104	70.00	70.00	69.87	69.87	0.000E+00	195.1	195.1
101	-1.50732	-1.693269	-0.00018311	70.00	70.00	69.87	69.86	0.000E+00	195.1	195.1
102	-124.45306	-124.457901	0.00000000	69.88	69.88	69.60	69.60	0.000E+00	195.1	195.1
103	-124.71108	-124.897743	-0.00018311	69.88	69.88	69.59	69.59	0.000E+00	195.1	195.1
200	0.00000	0.000000	0.00000000	70.00	70.00	70.00	70.00	0.000E+00	195.1	195.1
201	0.00000	0.000000	0.00000000	70.00	70.00	70.00	70.00	0.000E+00	195.1	195.1
202	No Solution	No Solution	0.00000000	70.00	70.00	70.00	70.00	-9.502E-03	195.1	195.1
203	19.79171	19.791706	0.00000000	70.00	70.00	70.00	70.00	0.000E+00	195.1	195.1
X204	-19.39581	-99.461891	-0.04364014	70.00	69.96	70.00	69.96	8.419E-03	195.1	195.1
210	0.00000	0.000000	0.00000000	70.00	70.00	70.00	70.00	0.000E+00	195.1	195.1
211	0.00000	0.000000	0.00000000	70.00	70.00	70.00	70.00	0.000E+00	195.1	195.1
212	0.00000	0.000000	0.00000000	70.00	70.00	70.00	70.00	0.000E+00	195.1	195.1
213	No Solution	No Solution	0.00000000	70.00	70.00	70.00	70.00	-7.567E-04	195.1	195.1
214	No Solution	No Solution	0.00000000	70.00	70.00	70.00	70.00	4.140E-03	195.1	195.1
215	No Solution	No Solution	0.00000000	70.00	70.00	70.00	70.00	6.398E-03	195.1	195.1
625	-114.38070	-114.380699	0.00000000	69.94	69.94	69.94	69.94	0.000E+00	195.1	195.1
631	-124.21120	-124.211205	0.00000000	69.93	69.93	69.93	69.93	0.000E+00	195.1	195.1
636	-148.13695	-148.136948	0.00000000	69.89	69.89	69.89	69.89	0.000E+00	195.1	195.1
637	-39.17648	-39.199238	0.00048828	70.26	70.26	70.00	70.00	0.000E+00	195.2	195.2
X638	No Solution	19.791706	0.00000000	70.00	70.00	70.00	70.00	-9.784E-03	195.1	195.1

Pipe	H Static In (Btu/lbm)	H Static Out (Btu/lbm)	Rho Stag. In (lbm/ft3)	Rho Stag. Out (lbm/ft3)	Heat Transfer Model	Heat Flux (Btu/hr-ft2)	Heat Rate (Btu/hr)
1	195.0	195.0	0.07292	0.07265	Adiabatic	0	0
2	195.0	195.0	0.07242	0.07233	Adiabatic	0	0
3	194.9	194.9	0.07229	0.07107	Adiabatic	0	0
4	195.0	195.0	0.07100	0.07096	Adiabatic	0	0
5	194.9	194.9	0.07092	0.07087	Adiabatic	0	0
6	195.0	195.0	0.07018	0.07016	Adiabatic	0	0
7	195.0	195.0	0.07015	0.07006	Adiabatic	0	0
8	195.0	195.0	0.06988	0.06987	Adiabatic	0	0
9	195.0	195.0	0.06980	0.06977	Adiabatic	0	0
16	195.1	195.1	0.06572	0.06567	Adiabatic	0	0
17	195.1	195.1	0.06562	0.06562	Adiabatic	0	0
18	195.1	195.1	0.06557	0.06556	Adiabatic	0	0
19	195.1	195.1	0.06450	0.06448	Adiabatic	0	0
20	195.0	195.0	0.05461	0.05459	Adiabatic	0	0
21	195.0	195.0	0.05459	0.05458	Adiabatic	0	0
22	195.0	195.0	0.05273	0.05271	Adiabatic	0	0
23	195.0	195.0	0.05197	0.05191	Adiabatic	0	0
24	195.0	195.0	0.05185	0.05185	Adiabatic	0	0
25	195.0	195.0	0.05181	0.05180	Adiabatic	0	0
26	195.0	195.0	0.05173	0.05172	Adiabatic	0	0
27	195.0	195.0	0.05088	0.05086	Adiabatic	0	0
28	195.0	195.0	0.05008	0.05008	Adiabatic	0	0
29	195.0	195.0	0.05006	0.05006	Adiabatic	0	0
30	195.0	195.0	0.05004	0.05004	Adiabatic	0	0
31	195.0	195.0	0.05004	0.05002	Adiabatic	0	0
32	195.0	195.0	0.04995	0.04993	Adiabatic	0	0
33	195.0	195.0	0.04991	0.04984	Adiabatic	0	0
35	195.0	195.0	0.04569	0.04562	Adiabatic	0	0
36	195.0	195.0	0.04562	0.04562	Adiabatic	0	0

AFT Arrow 3.0 Output (7 of 13) 2/21/2006
DMJMH+N

AFT Arrow Model Main OGTS Case 1 (70 °F, Adiabatic, Robinson Fan Curve @ 3550 RPM)

Pipe	H Static In (Btu/lbm)	H Static Out (Btu/lbm)	Rho Stag. In (lbm/ft3)	Rho Stag. Out (lbm/ft3)	Heat Transfer Model	Heat Flux (Btu/hr-ft2)	Heat Rate (Btu/hr)
37	195.0	195.0	0.04558	0.04558	Adiabatic	0	0
38	195.0	195.0	0.04554	0.04554	Adiabatic	0	0
39	194.9	194.9	0.04553	0.04550	Adiabatic	0	0
40	222.6	222.6	0.06035	0.06030	Adiabatic	0	0
41	222.6	222.6	0.06024	0.06024	Adiabatic	0	0
42	222.6	222.6	0.06019	0.06019	Adiabatic	0	0
43	222.6	222.6	0.06010	0.06009	Adiabatic	0	0
50	195.0	195.0	0.07292	0.07212	Adiabatic	0	0
51	195.0	195.0	0.07171	0.07153	Adiabatic	0	0
52	195.0	195.0	0.07125	0.07113	Adiabatic	0	0
53	195.0	195.0	0.07081	0.07065	Adiabatic	0	0
54	195.0	195.0	0.07037	0.06999	Adiabatic	0	0
55	194.8	194.8	0.06972	0.06965	Adiabatic	0	0
60	195.1	195.1	0.07292	0.07292	Adiabatic	0	0
61	195.1	195.1	0.07292	0.07292	Adiabatic	0	0
62	195.1	195.1	0.06949	0.06949	Adiabatic	0	0
63	195.1	195.1	0.06949	0.06949	Adiabatic	0	0
64	194.8	194.8	0.06948	0.06942	Adiabatic	0	0
65	195.1	195.1	0.06869	0.06864	Adiabatic	0	0
66	195.0	195.0	0.06805	0.06784	Adiabatic	0	0
67	194.9	194.9	0.06761	0.06747	Adiabatic	0	0
68	194.9	194.9	0.06724	0.06704	Adiabatic	0	0
69	195.1	195.1	0.06643	0.06641	Adiabatic	0	0
70	195.1	195.1	0.06606	0.06580	Adiabatic	0	0
80	195.1	195.1	0.07292	0.07292	Adiabatic	0	0
81	195.1	195.1	0.07292	0.07292	Adiabatic	0	0
82	195.1	195.1	0.07292	0.07292	Adiabatic	0	0
83	195.1	195.1	0.06570	0.06570	Adiabatic	0	0
84	195.1	195.1	0.06570	0.06570	Adiabatic	0	0
90	195.1	195.1	0.07292	0.07275	Adiabatic	0	0
91	195.1	195.1	0.07236	0.07227	Adiabatic	0	0
92	195.1	195.1	0.06573	0.06566	Adiabatic	0	0
93	195.0	195.0	0.06569	0.06569	Adiabatic	0	0
94	195.0	195.0	0.06569	0.06569	Adiabatic	0	0
100	195.1	195.1	0.07292	0.07279	Adiabatic	0	0
101	195.1	195.1	0.07271	0.07267	Adiabatic	0	0
102	195.0	195.0	0.05009	0.05009	Adiabatic	0	0
103	195.0	195.0	0.05004	0.05001	Adiabatic	0	0
200	195.1	195.1	0.07292	0.07292	Adiabatic	0	0
201	195.1	195.1	0.07292	0.07292	Adiabatic	0	0
202	195.1	195.1	0.06920	0.07656	Adiabatic	0	0
203	195.1	195.1	0.07657	0.07657	Adiabatic	0	0
X204	195.1	195.1	0.06934	0.05459	Adiabatic	0	0
210	195.1	195.1	0.07292	0.07292	Adiabatic	0	0
211	195.1	195.1	0.07292	0.07292	Adiabatic	0	0
212	195.1	195.1	0.07292	0.07292	Adiabatic	0	0
213	195.1	195.1	0.07693	0.07751	Adiabatic	0	0
214	195.1	195.1	0.07751	0.07431	Adiabatic	0	0
215	195.1	195.1	0.07430	0.06935	Adiabatic	0	0
625	195.1	195.1	0.05185	0.05185	Adiabatic	0	0
631	195.1	195.1	0.05004	0.05004	Adiabatic	0	0
636	195.1	195.1	0.04563	0.04563	Adiabatic	0	0
637	195.1	195.1	0.06578	0.06578	Adiabatic	0	0
X638	195.1	195.1	0.06898	0.07657	Adiabatic	0	0

AFT Arrow 3.0 Output (8 of 13) 2/21/2006
DMJMH+N

AFT Arrow Model Main OGTS Case 1 (70 °F, Adiabatc, Robinson Fan Curve @ 3550 RPM)

All Junction Table

Jct	Name	Mass Flow Thru Junction (lbm/hr)	dP Stag. Total (in. H2O std.)	P Stag. In (in. H2O std. (g))	P Stag. Out (in. H2O std. (g))	P Static In (in. H2O std. (g))
1	Assigned Pressure	2,443	0.00000	0.0000	0.00000	-0.46934
2	ICV Filter N02-010	2,443	1.25658	-1.4706	-2.72719	-1.94173
3	Area Change	2,443	0.20800	-3.2130	-3.42099	-3.68618
4	Area Change	2,443	0.38627	-10.0394	-10.42568	-12.53375
5	Area Change	2,443	0.21201	-10.6327	-10.84468	-11.11499
X6	ICV	2,443	3.74314	-11.0974	-14.84051	-13.59866
7	Area Change	2,443	0.02398	-14.9867	-15.01068	-15.47457
8	HV-114	2,443	0.94453	-15.5366	-16.48112	-16.55699
9	HV-115	2,443	0.42023	-16.5244	-16.94462	-17.01423
16	Tee or Wye	N/A	See Losses	-39.0696	-39.06957	-39.57029
17	36-V-049	15,114	0.25113	-39.3129	-39.56406	-39.76582
18	HV-125	15,114	0.25864	-39.5765	-39.83514	-40.02973
19	Packed Tower	15,114	5.77004	-39.8962	-45.66622	-40.34983
20	Venturi/Demister	15,114	53.61032	-45.7745	-99.38476	-46.23574
21	Tee or Wye	N/A	0.00000	-99.4619	-99.46189	-100.00702
22	Condenser Demister	15,114	10.07015	-99.5326	-109.60276	-100.07787
X23	WSS Heater	15,114	4.01529	-109.6771	-113.69239	-110.24178
24	WSS Valve V-072	15,114	0.32646	-114.0436	-114.37003	-114.61702
25	Tee or Wye	N/A	See Losses	-114.3807	-114.38070	-114.95518
26	HV-313	15,114	0.33264	-114.6534	-114.98602	-115.22809
27	HEPA	15,114	4.58231	-115.0665	-119.64875	-115.64201
28	HV-314a	15,114	0.11286	-123.9569	-124.06976	-124.55138
29	HEGA	15,114	4.21437	-119.7390	-123.95342	-120.32436
30	HV-314b	15,114	0.11291	-124.0733	-124.18618	-124.66800
31	Tee or Wye	N/A	0.00000	-124.2112	-124.21120	-124.80617
32	36-V-017	15,114	0.34679	-124.3014	-124.64820	-124.89667
33	Tee or Wye	N/A	See Losses	-124.9303	-124.93027	-125.56457
X34	SCR	25,853	22.52108	-125.2850	-147.80612	-125.99634
36	Tee or Wye	N/A	0.00000	-148.1369	-148.13695	-148.50980
37	HV-525	25,853	0.22300	-148.1766	-148.39961	-148.54942
38	36-V-024	25,853	0.22956	-148.4035	-148.63303	-148.77660
39	Area Change	25,853	0.06106	-148.6411	-148.70213	-149.01459
40	Fan N31-025	25,853	-150.55161	-148.8392	1.71238	-150.02509
41	36-V-080	25,853	0.35063	1.3370	0.98637	0.74977
42	HV-526	25,853	0.35599	0.9822	0.62617	0.39442
43	Branch	25,853	0.58798	0.6220	0.03400	0.03368
44	Assigned Pressure	25,853	0.00000	0.0000	0.00000	-0.01623
50	Assigned Pressure	1,675	0.00000	0.0000	0.00000	-1.13875
51	AWTE Filter N22-026	1,675	2.20376	-4.3404	-6.54420	-5.49188
52	HV-111	1,675	1.52115	-7.5448	-9.06590	-8.70578
53	AWTE	1,675	1.74941	-9.7016	-11.45102	-10.86915
54	HV-113	1,675	1.53995	-12.2958	-13.83574	-13.47128
55	Tee or Wye	N/A	See Losses	-17.3825	-17.38251	-19.03365
60	Assigned Pressure	0	0.00000	0.0000	0.00000	0.00000
61	SMF Dilution Filter N02-049	0	0.00000	0.0000	0.00000	0.00000
X62	TV-014	0	18.63494	0.0000	-18.63493	0.00000
63	Area Change	0	0.00000	-18.6349	-18.63493	-18.63493
64	Tee or Wye	N/A	See Losses	-18.6507	-18.65072	-21.58186
65	HV-002	4,117	3.96802	-19.0142	-22.98223	-21.95510
66	SMF N02-019	4,117	3.20005	-23.2330	-26.43308	-23.39542
67	HV-003	4,117	1.23150	-27.5910	-28.82253	-29.02798
68	HV-004	4,117	1.24148	-29.5861	-30.82764	-31.03101

AFT Arrow 3.0 Output (9 of 13) 2/21/2006
DMJMH+N

AFT Arrow Model Main OGTS Case 1 (70 °F, Adiabatc, Robinson Fan Curve @ 3550 RPM)

Jct	Name	Mass Flow Thru Junction (lbm/hr)	dP Stag. Total (in. H2O std.)	P Stag. In (in. H2O std. (g))	P Stag. Out (in. H2O std. (g))	P Static In (in. H2O std. (g))
69	SMF N02-020	4,117	3.28492	-31.9300	-35.21494	-33.38426
70	HV-005	4,117	1.94054	-35.3185	-37.25901	-35.72991
80	Assigned Pressure	0	0.00000	0.0000	0.00000	0.00000
81	WRS Tank Filter	0	0.00000	0.0000	0.00000	0.00000
82	Area Change	0	0.00000	0.0000	0.00000	0.00000
X83	32-V-003	0	39.16119	0.0000	-39.16120	0.00000
84	Area Change	0	0.00000	-39.1612	-39.16120	-39.16120
90	Assigned Pressure	8,320	0.00000	0.0000	0.00000	-0.31240
91	WSS Filter N02-101/102	8,320	2.13601	-0.9115	-3.04750	-1.22462
92	FV-016	8,320	35.49265	-3.5154	-39.00806	-3.83061
93	Tee or Wye	N/A	See Losses	-39.1879	-39.18791	-39.69032
94	Tee or Wye	N/A	0.00000	-39.1925	-39.19253	-39.79951
100	Assigned Pressure	10,723	0.00000	0.0000	0.00000	-0.35498
101	SCR Filter N02-022	10,723	0.42997	-0.7213	-1.15128	-1.07695
102	HV-504	10,723	122.59866	-1.3371	-123.93574	-1.69327
103	36-V-019	10,723	0.25270	-123.9406	-124.19325	-124.45790
200	Assigned Pressure	0	0.00000	0.0000	0.00000	0.00000
201	WSS Filter N02-093	0	0.00000	0.0000	0.00000	0.00000
X202	FV-331	0	20.18748	0.0000	-20.18750	0.00000
203	Tee or Wye	0	0.00000	19.7917	19.79171	19.79171
204	Tee or Wye	0	0.00000	19.7917	19.79171	19.79171
210	Assigned Pressure	0	0.00000	0.0000	0.00000	0.00000
211	SWS Tank Filter N02-014A	0	0.00000	0.0000	0.00000	0.00000
212	Area Change	0	0.00000	0.0000	0.00000	0.00000
X213	37-V-004	0	-21.77087	0.0000	21.77087	0.00000
214	Area Change	0	No Solution	No Solution	No Solution	No Solution
215	Area Change	0	No Solution	No Solution	No Solution	No Solution
625	Dead End	0	0.00000	-114.3807	-114.38070	-114.38070
631	Dead End	0	0.00000	-124.2112	-124.21120	-124.21120
636	Dead End	0	0.00000	-148.1369	-148.13695	-148.13695
637	Waste Feed Blower	2,682	0.00000	-38.5490	-38.54910	-39.17638
638	Assigned Flow Vac Pump	0	No Solution	No Solution	No Solution	No Solution

Jct	P Static Out (in. H2O std. (g))	dT Stag. (deg. F)	T Stag. Inlet (deg. F)	T Stag. Outlet (deg. F)	T Static In (deg. F)	T Static Out (deg. F)	dH Stag. (Btu/lbm)	H Stag. In (Btu/lbm)	H Stag. Out (Btu/lbm)
1	-0.46934	0.0000000	70.00	70.00	70.00	70.00	0.00	195.1	195.1
2	-3.19980	-0.0012207	70.00	70.00	69.82	69.82	0.00	195.1	195.1
3	-5.87268	-0.0017090	70.00	70.00	69.82	69.06	0.00	195.1	195.1
4	-10.90774	0.0010986	69.99	69.99	69.02	69.80	0.00	195.1	195.1
5	-13.34431	-0.0017090	69.99	69.99	69.80	69.02	0.00	195.1	195.1
X6	-15.32820	-0.0021973	69.99	69.99	69.02	69.80	0.00	195.1	195.1
7	-16.02965	-0.0004272	69.99	69.99	69.79	69.59	0.00	195.1	195.1
8	-16.97091	-0.0004883	69.98	69.98	69.58	69.79	0.00	195.1	195.1
9	-17.43499	-0.0004272	69.98	69.98	69.79	69.79	0.00	195.1	195.1
16	-39.57029	0.0000000	70.02	70.02	69.81	69.81	N/A	195.1	195.1
17	-40.01730	-0.0003052	70.02	70.01	69.83	69.83	0.00	195.1	195.1
18	-40.28872	-0.0002441	70.01	70.01	69.83	69.82	0.00	195.1	195.1
19	-46.12737	-0.0056152	70.01	70.01	69.82	69.81	0.00	195.1	195.1
20	-99.92975	-0.0525513	70.01	69.96	69.81	69.68	0.00	195.1	195.1
21	-100.00702	0.0000000	69.96	69.96	69.68	69.68	N/A	195.1	195.1
22	-110.16729	-0.0098877	69.96	69.95	69.68	69.65	0.00	195.1	195.1
X23	-114.26513	-0.0039063	69.95	69.94	69.65	69.64	0.00	195.1	195.1
24	-114.94418	-0.0003052	69.94	69.94	69.64	69.64	0.00	195.1	195.1
25	-114.95518	0.0000000	69.94	69.94	69.64	69.64	N/A	195.1	195.1

AFT Arrow 3.0 Output (10 of 13) 2/21/2006
DMJMH+N

AFT Arrow Model Main OGTS Case 1 (70 °F, Adiabatic, Robinson Fan Curve @ 3550 RPM)

Jct	P Static Out (in. H2O std. (g))	dT Stag. (deg. F)	T Stag. Inlet (deg. F)	T Stag. Outlet (deg. F)	T Static In (deg. F)	T Static Out (deg. F)	dH Stag. (Btu/lbm)	H Stag. In (Btu/lbm)	H Stag. Out (Btu/lbm)
26	-115.56142	-0.0003052	69.94	69.94	69.64	69.64	0.00	195.1	195.1
27	-120.23390	-0.0045166	69.94	69.94	69.64	69.62	0.00	195.1	195.1
28	-124.66447	-0.0001221	69.93	69.93	69.61	69.61	0.00	195.1	195.1
29	-124.54789	-0.0041504	69.94	69.93	69.62	69.61	0.00	195.1	195.1
30	-124.78114	-0.0001221	69.93	69.93	69.61	69.61	0.00	195.1	195.1
31	-124.80617	0.0000000	69.93	69.93	69.61	69.61	N/A	195.1	195.1
32	-125.24420	-0.0003052	69.93	69.93	69.61	69.60	0.00	195.1	195.1
33	-125.56457	0.0000000	69.91	69.91	69.56	69.56	N/A	195.1	195.1
X34	-148.17836	-0.0217896	69.91	69.89	69.52	69.66	0.00	195.1	195.1
36	-148.50980	0.0000000	69.89	69.89	69.66	69.66	N/A	195.1	195.1
37	-148.77275	-0.0002441	69.89	69.89	69.66	69.66	0.00	195.1	195.1
38	-149.00650	-0.0002441	69.89	69.89	69.66	69.66	0.00	195.1	195.1
39	-149.88734	-0.0007324	69.89	69.89	69.66	69.17	0.00	195.1	195.1
40	1.12570	112.9097900	69.89	182.80	69.17	182.53	-27.52	195.1	222.6
41	0.39861	-0.0002441	182.79	182.79	182.53	182.53	0.00	222.6	222.6
42	0.03788	-0.0001831	182.79	182.79	182.53	182.53	0.00	222.6	222.6
43	0.01777	0.0000000	182.79	182.79	182.53	182.79	0.00	222.6	222.6
44	-0.01623	0.0000000	70.00	70.00	70.00	70.00	0.00	195.1	195.1
50	-1.13875	0.0000000	70.00	70.00	70.00	70.00	0.00	195.1	195.1
51	-7.70222	-0.0021973	70.00	69.99	69.56	69.55	0.00	195.1	195.1
52	-10.23152	-0.0014648	69.99	69.99	69.55	69.54	0.00	195.1	195.1
53	-12.62390	-0.0017090	69.99	69.99	69.54	69.53	0.00	195.1	195.1
54	-15.01601	-0.0015259	69.99	69.99	69.53	69.53	0.00	195.1	195.1
55	-19.03365	0.0000000	69.98	69.98	69.33	69.33	N/A	195.1	195.1
60	0.00000	0.0000000	70.00	70.00	70.00	70.00	0.00	195.1	195.1
61	0.00000	0.0000000	70.00	70.00	70.00	70.00	0.00	195.1	195.1
X62	-18.63493	-0.0180054	70.00	69.98	70.00	69.98	0.00	195.1	195.1
63	-18.63493	0.0000000	69.98	69.98	69.98	69.98	0.00	195.1	195.1
64	-21.58186	0.0000000	69.98	69.98	68.82	68.82	N/A	195.1	195.1
65	-23.14453	-0.0018311	69.98	69.98	68.81	69.91	0.00	195.1	195.1
66	-27.86551	-0.0040894	69.98	69.97	69.91	69.40	0.00	195.1	195.1
67	-30.26438	-0.0011597	69.97	69.97	69.39	69.39	0.00	195.1	195.1
68	-32.27746	-0.0012207	69.97	69.97	69.38	69.38	0.00	195.1	195.1
69	-35.62627	-0.0024414	69.97	69.97	69.37	69.80	0.00	195.1	195.1
70	-37.67270	-0.0018921	69.97	69.96	69.80	69.79	0.00	195.1	195.1
80	0.00000	0.0000000	70.00	70.00	70.00	70.00	0.00	195.1	195.1
81	0.00000	0.0000000	70.00	70.00	70.00	70.00	0.00	195.1	195.1
82	0.00000	0.0000000	70.00	70.00	70.00	70.00	0.00	195.1	195.1
X83	-39.16120	0.0351563	70.00	70.04	70.00	70.04	0.00	195.1	195.1
84	-39.16120	0.0000000	70.04	70.04	70.04	70.04	0.00	195.1	195.1
90	-0.31240	0.0000000	70.00	70.00	70.00	70.00	0.00	195.1	195.1
91	-3.36233	-0.0021362	70.00	70.00	69.88	69.88	0.00	195.1	195.1
92	-39.35467	-0.0347290	70.00	69.96	69.88	69.82	0.00	195.1	195.1
93	-39.69032	0.0000000	70.04	70.04	69.83	69.83	N/A	195.1	195.1
94	-39.79951	0.0000000	70.04	70.04	69.78	69.78	N/A	195.1	195.1
100	-0.35498	0.0000000	70.00	70.00	70.00	70.00	0.00	195.1	195.1
101	-1.50732	-0.0004272	70.00	70.00	69.87	69.87	0.00	195.1	195.1
102	-124.45306	-0.1201172	70.00	69.88	69.86	69.60	0.00	195.1	195.1
103	-124.71108	-0.0002441	69.88	69.88	69.60	69.59	0.00	195.1	195.1
200	0.00000	0.0000000	70.00	70.00	70.00	70.00	0.00	195.1	195.1
201	0.00000	0.0000000	70.00	70.00	70.00	70.00	0.00	195.1	195.1
X202	-20.18750	0.0000000	70.00	70.00	70.00	70.00	0.00	195.1	195.1
203	19.79171	0.0000000	70.00	70.00	70.00	70.00	N/A	195.1	195.1
204	19.79171	0.0000000	70.00	70.00	70.00	70.00	N/A	195.1	195.1

AFT Arrow 3.0 Output (11 of 13) 2/21/2006
DMJMH+N

AFT Arrow Model Main OGTS Case 1 (70 °F, Adiabatc, Robinson Fan Curve @ 3550 RPM)

Jct	P Static Out (in. H2O std. (g))	dT Stag. (deg. F)	T Stag. Inlet (deg. F)	T Stag. Outlet (deg. F)	T Static In (deg. F)	T Static Out (deg. F)	dH Stag. (Btu/lbm)	H Stag. In (Btu/lbm)	H Stag. Out (Btu/lbm)
210	0.00000	0.0000000	70.00	70.00	70.00	70.00	0.00	195.1	195.1
211	0.00000	0.0000000	70.00	70.00	70.00	70.00	0.00	195.1	195.1
212	0.00000	0.0000000	70.00	70.00	70.00	70.00	0.00	195.1	195.1
X213	21.77087	0.0000000	70.00	70.00	70.00	70.00	0.00	195.1	195.1
214	No Solution	No Solution	No Solution	No Solution	No Solution	No Solution	0.00	No Solution	No Solution
215	No Solution	No Solution	No Solution	No Solution	No Solution	No Solution	0.00	No Solution	No Solution
625	-114.38070	0.0000000	69.94	69.94	69.94	69.94	0.00	195.1	195.1
631	-124.21120	0.0000000	69.93	69.93	69.93	69.93	0.00	195.1	195.1
636	-148.13695	0.0000000	69.89	69.89	69.89	69.89	0.00	195.1	195.1
637	-39.17648	0.0000000	70.26	70.26	70.00	70.00	0.00	195.2	195.2
638	No Solution	No Solution	No Solution	No Solution	No Solution	No Solution	0.00	No Solution	No Solution

Jct	H Static In (Btu/lbm)	H Static Out (Btu/lbm)	Sonic Area (inches2)
1	195.1	195.1	2.058
2	195.0	195.0	2.065
3	195.0	194.9	2.075
4	194.9	195.0	2.111
5	195.0	194.9	2.114
X6	194.9	195.0	2.117
7	195.0	195.0	2.139
8	195.0	195.0	2.142
9	195.0	195.0	2.147
16	195.1	195.1	N/A
17	195.1	195.1	14.133
18	195.1	195.1	14.144
19	195.1	195.1	14.157
20	195.1	195.0	14.394
21	195.0	195.0	N/A
22	195.0	195.0	17.005
X23	195.0	195.0	17.608
24	195.0	195.0	17.881
25	195.0	195.0	N/A
26	195.0	195.0	17.919
27	195.0	195.0	17.946
28	195.0	195.0	18.532
29	195.0	195.0	18.249
30	195.0	195.0	18.540
31	195.0	195.0	N/A
32	195.0	195.0	18.556
33	195.0	195.0	N/A
X34	195.0	195.0	31.856
36	195.0	195.0	N/A
37	195.0	195.0	34.799
38	195.0	195.0	34.831
39	195.0	194.9	34.865
40	194.9	222.6	34.893
41	222.6	222.6	23.915
42	222.6	222.6	23.936
43	222.6	222.6	N/A
44	195.1	195.1	23.995
50	195.1	195.1	1.411
51	195.0	195.0	1.427
52	195.0	195.0	1.438

AFT Arrow 3.0 Output (12 of 13) 2/21/2006
DMJMH+N

AFT Arrow Model Main OGTS Case 1 (70 °F, Adiabatc, Robinson Fan Curve @ 3550 RPM)

Jct	H Static In (Btu/lbm)	H Static Out (Btu/lbm)	Sonic Area (inches2)
53	195.0	195.0	1.446
54	195.0	195.0	1.456
55	194.9	194.9	N/A
60	195.1	195.1	0.000
61	195.1	195.1	0.000
X62	195.1	195.1	0.000
63	195.1	195.1	0.000
64	194.8	194.8	N/A
65	194.8	195.1	3.643
66	195.1	195.0	3.684
67	195.0	194.9	3.727
68	194.9	194.9	3.748
69	194.9	195.1	3.772
70	195.1	195.1	3.807
80	195.1	195.1	0.000
81	195.1	195.1	0.000
82	195.1	195.1	0.000
X83	195.1	195.1	0.000
84	195.1	195.1	0.000
90	195.1	195.1	7.008
91	195.1	195.1	7.024
92	195.1	195.1	7.070
93	195.1	195.1	N/A
94	195.0	195.0	N/A
100	195.1	195.1	9.031
101	195.1	195.1	9.048
102	195.1	195.0	9.062
103	195.0	195.0	13.147
200	195.1	195.1	0.000
201	195.1	195.1	0.000
X202	195.1	195.1	0.000
203	195.1	195.1	N/A
204	195.1	195.1	N/A
210	195.1	195.1	0.000
211	195.1	195.1	0.000
212	195.1	195.1	0.000
X213	195.1	195.1	0.000
214	No Solution	No Solution	0.000
215	No Solution	No Solution	0.000
625	195.1	195.1	0.000
631	195.1	195.1	0.000
636	195.1	195.1	0.000
637	195.1	195.1	2.503
638	No Solution	No Solution	0.000

Junction Loss Table

Jct	Pipe #	Pipe Dir.	dP Stag. Total (in. H2O std.)
16	P94	In	-0.1407
	P16	Out	0.000
	P70	In	0.3964
21	P21	Out	0.000
	P20	In	0.000

AFT Arrow 3.0 Output (13 of 13) 2/21/2006
DMJMH+N

AFT Arrow Model Main OGTS Case 1 (70 °F, Adiabatc, Robinson Fan Curve @ 3550 RPM)

Jct	Pipe #	Pipe Dir.	dP Stag. Total (in. H2O std.)
	P204	In	0.000
25	P24	In	0.000
	P625	In	0.000
	P25	Out	0.1755
31	P30	In	0.000
	P31	Out	0.000
	P631	In	0.000
33	P32	In	0.1711
	P33	Out	0.000
	P103	In	0.5507
36	P35	In	0.000
	P36	Out	0.000
	P636	In	0.000
55	P9	In	0.2625
	P55	Out	0.000
	P54	In	1.474
64	P63	In	0.000
	P64	Out	0.000
	P55	In	0.8775
93	P92	In	-0.2123
	P93	Out	0.000
	P637	In	0.6161
94	P93	In	0.000
	P94	Out	0.000
	P84	In	0.000
203	P202	In	0.000
	P203	Out	0.000
	P638	In	0.000
204	P203	In	0.000
	P204	Out	0.000
	P215	In	0.000

This page intentionally left blank.

Title: AFT Arrow Model Main OGTS Case 2 (115°F, Heat Transfer, Fan Curve @ 3550 RPM, Clean Filters)
Input File: C:\AFT Products\AFT Arrow\DBVS-OGTS-R2.aro

Number Of Pipes= 83
Number Of Junctions= 84

Length March Solution Method with Mach Number Limits
Segments Per Pipe= 2
Mach Number Increment= 0.01
Pressure Tolerance= 0.0001 relative change
Mass Flow Rate Tolerance= 0.0001 relative change
Enthalpy Tolerance= 0.0001 relative change
Flow Relaxation= (Automatic)
Pressure Relaxation= (Automatic)
Resistance Relaxation= (Automatic)

Fluid Database: AFT Standard
Fluid: Air
Max Fluid Temperature Data= 1000 deg. K
Min Fluid Temperature Data= 200 deg. K
Molecular Weight =28.97 amu
Gas Constant =0.06855 Btu/lbm-R
Critical Pressure =37.25 atm
Critical Temperature =132.41 deg. K
Acentric Factor =0.021
Equation of State= Redlich-Kwong
Enthalpy Model= Generalized
Specific Heat Ratio Accuracy = High
Atmospheric Pressure= 14.3 psia
Gravitational Acceleration= 1 g
Standard Pressure= 14.696 psia
Standard Temperature= 60 deg. F
Turbulent Flow Above Reynolds Number= 4000
Laminar Flow Below Reynolds Number= 2300

Pipe Input Table

Pipe	Name	Pipe Defined	Length	Length Units	Hydraulic Diameter	Hydraulic Diam. Units	Friction Data Set	Roughness	Roughness Units	Losses (K)
1	Pipe	Yes	64	inches	6.065	inches	Unspecified	0.00015	feet	2.93
2	Pipe	Yes	104	inches	6.065	inches	Unspecified	0.00015	feet	0.71
3	Pipe	Yes	177.167	inches	4.026	inches	Unspecified	0.00015	feet	1.855
4	Pipe	Yes	62	inches	6.065	inches	Unspecified	0.00015	feet	0.24
5	Pipe	Yes	22	inches	4.026	inches	Unspecified	0.00015	feet	0
6	Pipe	Yes	72	inches	6.065	inches	Unspecified	0.00015	feet	0.08
7	Pipe	Yes	141.5	inches	5.047	inches	Unspecified	0.00015	feet	0
8	Pipe	Yes	6	inches	6.065	inches	Unspecified	0.00015	feet	0.07
9	Pipe	Yes	38.5	inches	6.065	inches	Unspecified	0.00015	feet	0.24
16	Pipe	Yes	181	inches	15.624	inches	Unspecified	0.00015	feet	0.36
17	Pipe	Yes	28	inches	15.624	inches	Unspecified	0.00015	feet	0
18	Pipe	Yes	25	inches	15.624	inches	Unspecified	0.00015	feet	0.11
19	Pipe	Yes	25	inches	15.624	inches	Unspecified	0.00015	feet	0.21
20	Pipe	Yes	32	inches	15.624	inches	Unspecified	0.00015	feet	0.11
21	Pipe	Yes	20	inches	15.624	inches	Unspecified	0.00015	feet	0.11
22	Pipe	Yes	22	inches	15.624	inches	Unspecified	0.00015	feet	0.11
23	Pipe	Yes	33	inches	15.624	inches	Unspecified	0.00015	feet	0.58
24	Pipe	Yes	5	inches	15.624	inches	Unspecified	0.00015	feet	0
25	Pipe	Yes	19.25	inches	15.624	inches	Unspecified	0.00015	feet	0.15
26	Pipe	Yes	30.25	inches	15.624	inches	Unspecified	0.00015	feet	0.11
27	Pipe	Yes	45	inches	15.624	inches	Unspecified	0.00015	feet	0.11
28	Pipe	Yes	6	inches	15.624	inches	Unspecified	0.00015	feet	0
29	Pipe	Yes	6	inches	15.624	inches	Unspecified	0.00015	feet	0
30	Pipe	Yes	24	inches	15.624	inches	Unspecified	0.00015	feet	0

AFT Arrow 3.0 Input
DMJMH+N

(2 of 12)

2/21/2006 04:45 PM

AFT Arrow Model Main OGTS Case 2 (115°F, Heat Transfer, Fan Curve @ 3550 RPM, Clean Filters)

Pipe	Name	Pipe Defined	Length	Length Units	Hydraulic Diameter	Hydraulic Diam. Units	Friction Data Set	Roughness	Roughness Units	Losses (K)
31	Pipe	Yes	173.5	inches	15.624	inches	Unspecified	0.00015	feet	0
32	Pipe	Yes	6	inches	15.624	inches	Unspecified	0.00015	feet	0.18
33	Pipe	Yes	106.25	inches	19.564	inches	Unspecified	0.00015	feet	0.42
35	Pipe	Yes	660	inches	23.5	inches	Unspecified	0.00015	feet	0.57
36	Pipe	Yes	20	inches	23.5	inches	Unspecified	0.00015	feet	0
37	Pipe	Yes	16.5	inches	23.5	inches	Unspecified	0.00015	feet	0
38	24" Sch 10	Yes	34.5	inches	23.5	inches	Unspecified	0.00015	feet	0
39	EJ-604	Yes	18.75	inches	17.624	inches	Unspecified	0.00015	feet	0.1
40	EJ-605	Yes	38.8	inches	19.564	inches	Unspecified	0.00015	feet	0.61
41	EJ-605	Yes	9.5	inches	19.564	inches	Unspecified	0.00015	feet	0
42	EJ-605	Yes	9.5	inches	19.564	inches	Unspecified	0.00015	feet	0
43	Stack	Yes	149	feet	48	inches	Unspecified	0.00015	feet	0.88
50	Pipe	Yes	131	inches	4.026	inches	Unspecified	0.00015	feet	3.16
51	Pipe	Yes	33.875	inches	4.026	inches	Unspecified	0.00015	feet	0.7
52	Pipe	Yes	47.125	inches	4.026	inches	Unspecified	0.00015	feet	0.32
53	Pipe	Yes	83.625	inches	4.026	inches	Unspecified	0.00015	feet	0.32
54	Pipe	Yes	283.25	inches	4.026	inches	Unspecified	0.00015	feet	0.4
55	Pipe	Yes	9.5	inches	5.047	inches	Unspecified	0.00015	feet	0.1
60	Pipe	Yes	120	inches	8.329	inches	Unspecified	0.00015	feet	3.17
61	Pipe	Yes	91	inches	6.065	inches	Unspecified	0.00015	feet	1.35
62	Pipe	Yes	191.5	inches	6.065	inches	Unspecified	0.00015	feet	0.2
63	Pipe	Yes	46.75	inches	5.047	inches	Unspecified	0.00015	feet	0.74
64	Pipe	Yes	24	inches	5.047	inches	Unspecified	0.00015	feet	4.031416E-02
65	Pipe	Yes	18	inches	10.42	inches	Unspecified	0.00015	feet	1.514091
66	Pipe	Yes	152	inches	6.065	inches	Unspecified	0.00015	feet	0.3703681
67	Pipe	Yes	24	inches	6.065	inches	Unspecified	0.00015	feet	0.45909
68	Pipe	Yes	41	inches	6.065	inches	Unspecified	0.00015	feet	0.64
69	Pipe	Yes	15	inches	8.329	inches	Unspecified	0.00015	feet	0.22
70	8" Sch 10	Yes	527	inches	8.329	inches	Unspecified	0.00015	feet	2.3
80	Pipe	Yes	6	inches	1.61	inches	Unspecified	0.00015	feet	0
81	Pipe	Yes	24	inches	1.61	inches	Unspecified	0.00015	feet	1
82	Pipe	Yes	18	inches	2.067	inches	Unspecified	0.00015	feet	0.47
83	Pipe	Yes	149	inches	2.067	inches	Unspecified	0.00015	feet	2.52
84	3" Sch 40	Yes	804	inches	3.068	inches	Unspecified	0.00015	feet	1.28
90	Pipe	Yes	78	inches	12.39	inches	Unspecified	0.00015	feet	2.81
91	Pipe	Yes	80	inches	12.39	inches	Unspecified	0.00015	feet	1.38
92	12" Sch 10	Yes	84	inches	12.39	inches	Unspecified	0.00015	feet	1.02
93	Pipe	Yes	6	inches	12.39	inches	Unspecified	0.00015	feet	0
94	Pipe	Yes	23	inches	12.39	inches	Unspecified	0.00015	feet	0
100	Pipe	Yes	50.5	inches	13.624	inches	Unspecified	0.00015	feet	1.97
101	Pipe	Yes	18.5	inches	13.624	inches	Unspecified	0.00015	feet	0.5
102	Pipe	Yes	8	inches	13.624	inches	Unspecified	0.00015	feet	0
103	14" Sch 10	Yes	59.5	inches	13.624	inches	Unspecified	0.00015	feet	0.29
200	Pipe	Yes	20	inches	12.39	inches	Unspecified	0.00015	feet	0.79
201	Pipe	Yes	10.5	inches	6.065	inches	Unspecified	0.00015	feet	1.26
202	Pipe	Yes	6	inches	6.065	inches	Unspecified	0.00015	feet	0
203	Pipe	Yes	17	inches	6.065	inches	Unspecified	0.00015	feet	0.33
204	Pipe	Yes	62	inches	8.329	inches	Unspecified	0.00015	feet	0.81
210	Pipe	Yes	6	inches	1.61	inches	Unspecified	0.00015	feet	0
211	Pipe	Yes	20	inches	1.61	inches	Unspecified	0.00015	feet	1
212	Pipe	Yes	18	inches	2.067	inches	Unspecified	0.00015	feet	0.47
213	Pipe	Yes	181	inches	4.026	inches	Unspecified	0.00015	feet	0.9
214	Pipe	Yes	313.5	inches	3.068	inches	Unspecified	0.00015	feet	0.02
215	Pipe	Yes	1046	inches	4.026	inches	Unspecified	0.00015	feet	0.9
625	Pipe	Yes	6	inches	15.624	inches	Unspecified	0.00015	feet	0

AFT Arrow 3.0 Input (3 of 12) 2/21/2006 04:45 PM
DMJMH+N

AFT Arrow Model Main OGTS Case 2 (115°F, Heat Transfer, Fan Curve @ 3550 RPM, Clean Filters)

Pipe	Name	Pipe Defined	Length	Length Units	Hydraulic Diameter	Hydraulic Diam. Units	Friction Data Set	Roughness	Roughness Units	Losses (K)
631	Pipe	Yes	6	inches	15.624	inches	Unspecified	0.00015	feet	0
636	Pipe	Yes	6	inches	23.5	inches	Unspecified	0.00015	feet	0
637	Pipe	Yes	1	feet	6.065	inches	Unspecified	0.00015	feet	0
638	Pipe	Yes	12	inches	6.065	inches	Unspecified	0.00015	feet	0

Pipe	Initial Flow	Initial Flow Units	Junctions (Up,Down)	Geometry	Material	Size	Type	Thermal Boundary
1			1, 2	Cylindrical Pipe	Stainless Steel	6 inch	schedule 40	General Heat Transfer
2			2, 3	Cylindrical Pipe	Stainless Steel	6 inch	schedule 40	General Heat Transfer
3			3, 4	Cylindrical Pipe	Stainless Steel	4 inch	schedule 40	General Heat Transfer
4			4, 5	Cylindrical Pipe	Stainless Steel	6 inch	schedule 40	General Heat Transfer
5			5, 6	Cylindrical Pipe	Stainless Steel	4 inch	schedule 40	General Heat Transfer
6			6, 7	Cylindrical Pipe	Stainless Steel	6 inch	schedule 40	General Heat Transfer
7			7, 8	Cylindrical Pipe	Stainless Steel	5 inch	schedule 40	General Heat Transfer
8			8, 9	Cylindrical Pipe	Stainless Steel	6 inch	schedule 40	General Heat Transfer
9			9, 55	Cylindrical Pipe	Stainless Steel	6 inch	schedule 40	General Heat Transfer
16			16, 17	Cylindrical Pipe	Stainless Steel	16 inch	schedule 10	General Heat Transfer
17			17, 18	Cylindrical Pipe	Stainless Steel	16 inch	schedule 10	General Heat Transfer
18			18, 19	Cylindrical Pipe	Stainless Steel	16 inch	schedule 10	General Heat Transfer
19			19, 20	Cylindrical Pipe	Stainless Steel	16 inch	schedule 10	General Heat Transfer
20			20, 21	Cylindrical Pipe	Stainless Steel	16 inch	schedule 10	General Heat Transfer
21			21, 22	Cylindrical Pipe	Stainless Steel	16 inch	schedule 10	General Heat Transfer
22			22, 23	Cylindrical Pipe	Stainless Steel	16 inch	schedule 10	General Heat Transfer
23			23, 24	Cylindrical Pipe	Stainless Steel	16 inch	schedule 10	General Heat Transfer
24			24, 25	Cylindrical Pipe	Stainless Steel	16 inch	schedule 10	General Heat Transfer
25			25, 26	Cylindrical Pipe	Stainless Steel	16 inch	schedule 10	General Heat Transfer
26			26, 27	Cylindrical Pipe	Stainless Steel	16 inch	schedule 10	General Heat Transfer
27			27, 29	Cylindrical Pipe	Stainless Steel	16 inch	schedule 10	General Heat Transfer
28			29, 28	Cylindrical Pipe	Stainless Steel	16 inch	schedule 10	General Heat Transfer
29			28, 30	Cylindrical Pipe	Stainless Steel	16 inch	schedule 10	General Heat Transfer
30			30, 31	Cylindrical Pipe	Stainless Steel	16 inch	schedule 10	General Heat Transfer
31			31, 32	Cylindrical Pipe	Stainless Steel	16 inch	schedule 10	General Heat Transfer
32			32, 33	Cylindrical Pipe	Stainless Steel	16 inch	schedule 10	General Heat Transfer
33			33, 34	Cylindrical Pipe	Stainless Steel	20 inch	schedule 10	General Heat Transfer
35			34, 36	Cylindrical Pipe	Stainless Steel	24 inch	schedule 10	General Heat Transfer
36			36, 37	Cylindrical Pipe	Stainless Steel	24 inch	schedule 10	General Heat Transfer
37			37, 38	Cylindrical Pipe	Stainless Steel	24 inch	schedule 10	General Heat Transfer
38			38, 39	Cylindrical Pipe	Stainless Steel	24 inch	schedule 10	General Heat Transfer
39			39, 40	Cylindrical Pipe	Stainless Steel	18 inch	schedule 10	General Heat Transfer
40			40, 41	Cylindrical Pipe	Stainless Steel	20 inch	schedule 10	General Heat Transfer
41			41, 42	Cylindrical Pipe	Stainless Steel	20 inch	schedule 10	General Heat Transfer
42			42, 43	Cylindrical Pipe	Stainless Steel	20 inch	schedule 10	General Heat Transfer
43			43, 44	Cylindrical Pipe	Unspecified			General Heat Transfer
50			50, 51	Cylindrical Pipe	Stainless Steel	4 inch	schedule 40	General Heat Transfer
51			51, 52	Cylindrical Pipe	Stainless Steel	4 inch	schedule 40	General Heat Transfer
52			52, 53	Cylindrical Pipe	Stainless Steel	4 inch	schedule 40	General Heat Transfer
53			53, 54	Cylindrical Pipe	Stainless Steel	4 inch	schedule 40	General Heat Transfer
54			54, 55	Cylindrical Pipe	Stainless Steel	4 inch	schedule 40	General Heat Transfer
55			55, 64	Cylindrical Pipe	Stainless Steel	5 inch	schedule 40	General Heat Transfer
60			60, 61	Cylindrical Pipe	Stainless Steel	8 inch	schedule 10	General Heat Transfer
61			61, 62	Cylindrical Pipe	Stainless Steel	6 inch	schedule 40	General Heat Transfer
62			62, 63	Cylindrical Pipe	Stainless Steel	6 inch	schedule 40	General Heat Transfer
63			63, 64	Cylindrical Pipe	Stainless Steel	5 inch	schedule 40	General Heat Transfer
64			64, 65	Cylindrical Pipe	Stainless Steel	5 inch	schedule 40	General Heat Transfer
65			65, 66	Cylindrical Pipe	Stainless Steel	10 inch	schedule 10	General Heat Transfer
66			66, 67	Cylindrical Pipe	Stainless Steel	6 inch	schedule 40	General Heat Transfer

AFT Arrow 3.0 Input
DMJMH+N

(4 of 12)

2/21/2006 04:45 PM

AFT Arrow Model Main OGTS Case 2 (115°F, Heat Transfer, Fan Curve @ 3550 RPM, Clean Filters)

Pipe	Initial Flow	Initial Flow Units	Junctions (Up,Down)	Geometry	Material	Size	Type	Thermal Boundary
67			67, 68	Cylindrical Pipe	Stainless Steel	6 inch	schedule 40	General Heat Transfer
68			68, 69	Cylindrical Pipe	Stainless Steel	6 inch	schedule 40	General Heat Transfer
69			69, 70	Cylindrical Pipe	Stainless Steel	8 inch	schedule 10	General Heat Transfer
70			70, 16	Cylindrical Pipe	Stainless Steel	8 inch	schedule 10	General Heat Transfer
80			80, 81	Cylindrical Pipe	Stainless Steel	1-1/2 inch	schedule 40	General Heat Transfer
81			81, 82	Cylindrical Pipe	Stainless Steel	1-1/2 inch	schedule 40	General Heat Transfer
82			82, 83	Cylindrical Pipe	Stainless Steel	2 inch	schedule 40	General Heat Transfer
83			83, 84	Cylindrical Pipe	Stainless Steel	2 inch	schedule 40	General Heat Transfer
84			84, 94	Cylindrical Pipe	Stainless Steel	3 inch	schedule 40	General Heat Transfer
90			90, 91	Cylindrical Pipe	Stainless Steel	12 inch	schedule 10	General Heat Transfer
91			91, 92	Cylindrical Pipe	Stainless Steel	12 inch	schedule 10	General Heat Transfer
92			92, 93	Cylindrical Pipe	Stainless Steel	12 inch	schedule 10	General Heat Transfer
93			93, 94	Cylindrical Pipe	Stainless Steel	12 inch	schedule 10	General Heat Transfer
94			94, 16	Cylindrical Pipe	Stainless Steel	12 inch	schedule 10	General Heat Transfer
100			100, 101	Cylindrical Pipe	Stainless Steel	14 inch	schedule 10	General Heat Transfer
101			101, 102	Cylindrical Pipe	Stainless Steel	14 inch	schedule 10	General Heat Transfer
102			102, 103	Cylindrical Pipe	Stainless Steel	14 inch	schedule 10	General Heat Transfer
103			103, 33	Cylindrical Pipe	Stainless Steel	14 inch	schedule 10	General Heat Transfer
200			200, 201	Cylindrical Pipe	Stainless Steel	12 inch	schedule 10	General Heat Transfer
201			201, 202	Cylindrical Pipe	Stainless Steel	6 inch	schedule 40	General Heat Transfer
202			202, 203	Cylindrical Pipe	Stainless Steel	6 inch	schedule 40	General Heat Transfer
203			203, 204	Cylindrical Pipe	Stainless Steel	6 inch	schedule 40	General Heat Transfer
204			204, 21	Cylindrical Pipe	Stainless Steel	8 inch	schedule 10	General Heat Transfer
210			210, 211	Cylindrical Pipe	Stainless Steel	1-1/2 inch	schedule 40	General Heat Transfer
211			211, 212	Cylindrical Pipe	Stainless Steel	1-1/2 inch	schedule 40	General Heat Transfer
212			212, 213	Cylindrical Pipe	Stainless Steel	2 inch	schedule 40	General Heat Transfer
213			213, 214	Cylindrical Pipe	Stainless Steel	4 inch	schedule 40	General Heat Transfer
214			214, 215	Cylindrical Pipe	Stainless Steel	3 inch	schedule 40	General Heat Transfer
215			215, 204	Cylindrical Pipe	Stainless Steel	4 inch	schedule 40	General Heat Transfer
625			625, 25	Cylindrical Pipe	Stainless Steel	16 inch	schedule 10	General Heat Transfer
631			631, 31	Cylindrical Pipe	Stainless Steel	16 inch	schedule 10	General Heat Transfer
636			636, 36	Cylindrical Pipe	Stainless Steel	24 inch	schedule 10	General Heat Transfer
637			637, 93	Cylindrical Pipe	Stainless Steel	6 inch	schedule 40	General Heat Transfer
638			638, 203	Cylindrical Pipe	Stainless Steel	6 inch	schedule 40	General Heat Transfer

Pipe	Ambient Temp.	Ambient Temp. Units	Special Condition
1	115	deg. F	None
2	115	deg. F	None
3	115	deg. F	None
4	115	deg. F	None
5	115	deg. F	None
6	115	deg. F	None
7	115	deg. F	None
8	115	deg. F	None
9	115	deg. F	None
16	115	deg. F	None
17	115	deg. F	None
18	115	deg. F	None
19	115	deg. F	None
20	115	deg. F	None
21	115	deg. F	None
22	115	deg. F	None
23	115	deg. F	None
24	115	deg. F	None
25	115	deg. F	None

AFT Arrow 3.0 Input (5 of 12) 2/21/2006 04:45 PM
DMJMH+N

AFT Arrow Model Main OGTS Case 2 (115°F, Heat Transfer, Fan Curve @ 3550 RPM, Clean Filters)

Pipe	Ambient Temp.	Ambient Temp. Units	Special Condition
26	115	deg. F	None
27	115	deg. F	None
28	115	deg. F	None
29	115	deg. F	None
30	115	deg. F	None
31	115	deg. F	None
32	115	deg. F	None
33	115	deg. F	None
35	115	deg. F	None
36	115	deg. F	None
37	115	deg. F	None
38	115	deg. F	None
39	115	deg. F	None
40	115	deg. F	None
41	115	deg. F	None
42	115	deg. F	None
43	115	deg. F	None
50	115	deg. F	None
51	115	deg. F	None
52	115	deg. F	None
53	115	deg. F	None
54	115	deg. F	None
55	115	deg. F	None
60	115	deg. F	None
61	115	deg. F	None
62	115	deg. F	None
63	115	deg. F	None
64	115	deg. F	None
65	115	deg. F	None
66	115	deg. F	None
67	115	deg. F	None
68	115	deg. F	None
69	115	deg. F	None
70	115	deg. F	None
80	115	deg. F	None
81	115	deg. F	None
82	115	deg. F	None
83	115	deg. F	None
84	115	deg. F	None
90	115	deg. F	None
91	115	deg. F	None
92	115	deg. F	None
93	115	deg. F	None
94	115	deg. F	None
100	115	deg. F	None
101	115	deg. F	None
102	115	deg. F	None
103	115	deg. F	None
200	115	deg. F	None
201	115	deg. F	None
202	115	deg. F	None
203	115	deg. F	None
204	115	deg. F	Closed
210	115	deg. F	None
211	115	deg. F	None

AFT Arrow 3.0 Input (6 of 12) 2/21/2006 04:45 PM
DMJMH+N

AFT Arrow Model Main OGTS Case 2 (115°F, Heat Transfer, Fan Curve @ 3550 RPM, Clean Filters)

Pipe	Ambient Temp.	Ambient Temp. Units	Special Condition
212	115	deg. F	None
213	115	deg. F	None
214	115	deg. F	None
215	115	deg. F	None
625	115	deg. F	None
631	115	deg. F	None
636	115	deg. F	None
637	115	deg. F	None
638	115	deg. F	Closed

Pipe Loss Table

Pipe Losses	K Total	Standard Bends	Mitre Bends	Smooth Bends	Angle Valves	Ball Valves	Butterfly Valves	Cylinder Valves	Gate Valves	Globe Valves	Plug Valves	Poppet Valves
64	0.04											
65	1.51											
66	0.37											
67	0.46			2 (0.42)								

Pipe Losses	Three-way Valves	Swing Check Valves	Lift Check Valves	Tilting Disc Check Valves	Stop Check Valves	Sharp-edged Orifice	Long Orifice	Contractions	Expansions
64									1 (0.0)
65									1 (1.51)
66								1 (0.13)	
67									

Pipe Losses	Entrances	Exits	Differential Flowmeter	Honeycomb	Screen	Tee	Add'l Loss
64						1 (0.04)	
65							
66							(0.24)
67						1 (0.04)	

Area Change Table

Area Change	Name	Object Defined	Elevation	Elevation Units	Initial Pressure	Initial Pressure Units	Database Source	Type	Geometry
3	Area Change	Yes	0	feet				Conical	Contraction
4	Area Change	Yes	0	feet				Conical	Expansion
5	Area Change	Yes	0	feet				Conical	Contraction
7	Area Change	Yes	0	feet				Conical	Contraction
39	Area Change	Yes	0	feet				Conical	Contraction
63	Area Change	Yes	0	feet				Conical	Contraction
82	Area Change	Yes	0	feet				Conical	Expansion
84	Area Change	Yes	0	feet				Conical	Expansion
212	Area Change	Yes	0	feet				Conical	Expansion
214	Area Change	Yes	0	feet				Conical	Contraction
215	Area Change	Yes	0	feet				Conical	Expansion

Area Change	Angle	Loss Factor
3	22.	0.439751
4	22.	0.1552215
5	22.	0.439751
7	11.	4.917351E-02
39	17.	0.1635637
63	11.	4.917351E-02

Area Change	Angle	Loss Factor
82	9.	3.155545E-02
84	18.	0.1212923
212	9.	3.155545E-02
214	18.	0.1555985
215	14.	5.570398E-02

Assigned Flow Table

Assigned Flow	Name	Object Defined	Elevation	Elevation Units	Initial Pressure	Initial Pressure Units	Database Source	Special Condition
637	Waste Feed Blower	Yes	0	feet				None
638	Assigned Flow Vac Pump	Yes	0	feet				None

Assigned Flow	Type	Flow	Flow Units	Loss Factor
637	Inflow	2682	lbm/hr	0
638	Inflow	42	lbm/hr	0

Assigned Pressure Table

Assigned Pressure	Name	Object Defined	Elevation	Elevation Units	Initial Pressure	Initial Pressure Units	Database Source	Pressure
1	Assigned Pressure	Yes	0	feet	14.30	psia		14.3
44	Assigned Pressure	Yes	0	feet	14.30	psia		14.3
50	Assigned Pressure	Yes	0	feet	14.30	psia		14.3
60	Assigned Pressure	Yes	0	feet	14.30	psia		14.3
80	Assigned Pressure	Yes	0	feet	14.30	psia		14.3
90	Assigned Pressure	Yes	0	feet	14.30	psia		14.3
100	Assigned Pressure	Yes	0	feet	14.30	psia		14.3
200	Assigned Pressure	Yes	0	feet	14.30	psia		14.3
210	Assigned Pressure	Yes	0	feet	14.30	psia		14.3

Assigned Pressure	Pressure Units	Pressure Type	Temperature	Temperature Units	Balance Energy	Balance Concentration	K Factor	(Pipe #1) K In, K Out
1	psia	Stagnation	115	deg. F	No	No	0	(P1) 0, 0
44	psia	Stagnation	115	deg. F	No	No	0	(P43) 0, 0
50	psia	Stagnation	115	deg. F	No	No	0	(P50) 0, 0
60	psia	Stagnation	115	deg. F	No	No	0	(P60) 0, 0
80	psia	Stagnation	115	deg. F	No	No	0	(P80) 0, 0
90	psia	Stagnation	115	deg. F	No	No	0	(P90) 0, 0
100	psia	Stagnation	115	deg. F	No	No	0	(P100) 0, 0
200	psia	Stagnation	115	deg. F	No	No	0	(P200) 0, 0
210	psia	Stagnation	115	deg. F	No	No	0	(P210) 0, 0

Assigned Pressure	(Pipe #2) K In, K Out	(Pipe #3) K In, K Out	(Pipe #4) K In, K Out	(Pipe #5) K In, K Out	(Pipe #6) K In, K Out	(Pipe #7) K In, K Out	(Pipe #8) K In, K Out	(Pipe #9) K In, K Out
1								
44								
50								
60								
80								
90								
100								
200								
210								

AFT Arrow 3.0 Input (8 of 12) 2/21/2006 04:45 PM
DMJMH+N

AFT Arrow Model Main OGTS Case 2 (115°F, Heat Transfer, Fan Curve @ 3550 RPM, Clean Filters)

Assigned Pressure	(Pipe #10) K In, K Out	(Pipe #11) K In, K Out	(Pipe #12) K In, K Out	(Pipe #13) K In, K Out	(Pipe #14) K In, K Out	(Pipe #15) K In, K Out	(Pipe #16) K In, K Out	(Pipe #17) K In, K Out
1								
44								
50								
60								
80								
90								
100								
200								
210								

Assigned Pressure	(Pipe #18) K In, K Out	(Pipe #19) K In, K Out	(Pipe #20) K In, K Out	(Pipe #21) K In, K Out	(Pipe #22) K In, K Out	(Pipe #23) K In, K Out	(Pipe #24) K In, K Out	(Pipe #25) K In, K Out
1								
44								
50								
60								
80								
90								
100								
200								
210								

Branch Table

Branch	Name	Object Defined	Elevation	Elevation Units	Initial Pressure	Initial Pressure Units	Database Source	Special Condition	Boundary Flow (+ = in/- = out)
43	Branch	Yes	0	feet				None	

Branch	Boundary Flow Units	(Pipe #1) K In, K Out	(Pipe #2) K In, K Out	(Pipe #3) K In, K Out	(Pipe #4) K In, K Out	(Pipe #5) K In, K Out	(Pipe #6) K In, K Out	(Pipe #7) K In, K Out	(Pipe #8) K In, K Out
43		(P42) 0, 1	(P43) 0, 0						

Branch	(Pipe #9) K In, K Out	(Pipe #10) K In, K Out	(Pipe #11) K In, K Out	(Pipe #12) K In, K Out	(Pipe #13) K In, K Out	(Pipe #14) K In, K Out	(Pipe #15) K In, K Out	(Pipe #16) K In, K Out	(Pipe #17) K In, K Out
43									

Branch	(Pipe #18) K In, K Out	(Pipe #19) K In, K Out	(Pipe #20) K In, K Out	(Pipe #21) K In, K Out	(Pipe #22) K In, K Out	(Pipe #23) K In, K Out	(Pipe #24) K In, K Out	(Pipe #25) K In, K Out
43								

Compressor/Fan Table

Compressor/Fan	Name	Object Defined	Elevation	Elevation Units	Initial Pressure	Initial Pressure Units	Database Source	Special Condition
40	Fan N31-025	Yes	0	feet				None

Compressor/Fan	Pump Type	Design Flow Rate	Design Flow Rate Units	Current Configuration	Independent Variable	Ind. Variable Units	Dependent Variable
40	Comp./Fan Curve				Vol. Flow Rate	ft3/min	Pressure Loss

Compressor/Fan	Dep. Variable Units	Comp./Fan Curve Constant a	Comp./Fan Curve Constant b	Comp./Fan Curve Constant c	Comp./Fan Curve Constant d	Comp./Fan Curve Constant e
40	in. H2O std.	114.7023	4.038226E-03	-3.200603E-07	0	0

Compressor/Fan	Runout Flow Rate	Runout Flow Rate Units	Added Press. Type	Speed	Control Discharge	Control Discharge Units	Control When Exceeded Only	Compression Process
40			Stagnation	100				Adiabatic

Control Valve Table

AFT Arrow 3.0 Input (9 of 12) 2/21/2006 04:45 PM
DMJMH+N

AFT Arrow Model Main OGTS Case 2 (115°F, Heat Transfer, Fan Curve @ 3550 RPM, Clean Filters)

Control Valve	Name	Object Defined	Elevation	Elevation Units	Initial Pressure	Initial Pressure Units	Database Source	Special Condition	Valve Type	Control Setting
92	FV-016	Yes	0	feet				None	FCV	8320
102	HV-504	Yes	0	feet				None	FCV	10723

Control Valve	Control Units	Pressure/ Head Type	Close Type	Full Open Loss Type	Full Open Loss	Full Open Xt
92	lbm/hr	N/A	Fail Open	None		
102	lbm/hr	N/A	Open (Close on Reverse Flow)	Cv	8300	Cv

Dead End Table

Dead End	Name	Object Defined	Elevation	Elevation Units	Initial Pressure	Initial Pressure Units	Database Source
625	Dead End	Yes	0	feet			
631	Dead End	Yes	0	feet			
636	Dead End	Yes	0	feet			

General Component Table

General Component	Name	Object Defined	Elevation	Elevation Units	Initial Pressure	Initial Pressure Units	Database Source
2	ICV Filter N02-010	Yes	0	feet			
19	Packed Tower	Yes	0	feet			
20	Venturi/Demister	Yes	0	feet			
22	Condenser Demister	Yes	0	feet			
27	HEPA	Yes	0	feet			
29	HEGA	Yes	0	feet			
51	AWTE Filter N22-026	Yes	0	feet			
53	AWTE	Yes	0	feet			
61	SMF Dilution Filter N02-049	Yes	0	feet			
66	SMF N02-019	Yes	0	feet			
69	SMF N02-020	Yes	0	feet			
81	WRS Tank Filter	Yes	0	feet			
91	WSS Filter N02-101/102	Yes	0	feet			
101	SCR Filter N02-022	Yes	0	feet			
201	WSS Filter N02-093	Yes	0	feet			
211	SWS Tank Filter N02-014A	Yes	0	feet			

General Component	Special Condition	Loss Model	Loss Value	Independent Variable	Ind. Variable Units	Dependent Variable	Dep. Variable Units
2	None	General Polynomial	Variable	Vol. Flow Rate	ft3/min	Pressure Loss	in. H2O std.
19	None	General Polynomial	Variable	Vol. Flow Rate	ft3/min	Pressure Loss	in. H2O std.
20	None	General Polynomial	Variable	Vol. Flow Rate	ft3/min	Pressure Loss	in. H2O std.
22	None	General Polynomial	Variable	Vol. Flow Rate	ft3/min	Pressure Loss	in. H2O std.
27	None	General Polynomial	Variable	Vol. Flow Rate	ft3/min	Pressure Loss	in. H2O std.
29	None	General Polynomial	Variable	Vol. Flow Rate	ft3/min	Pressure Loss	in. H2O std.
51	None	General Polynomial	Variable	Vol. Flow Rate	ft3/min	Pressure Loss	in. H2O std.
53	None	K Constant	1.5				
61	None	General Polynomial	Variable	Vol. Flow Rate	ft3/min	Pressure Loss	in. H2O std.
66	None	General Polynomial	Variable	Vol. Flow Rate	ft3/min	Pressure Loss	in. H2O std.
69	None	General Polynomial	Variable	Vol. Flow Rate	ft3/min	Pressure Loss	in. H2O std.
81	None	General Polynomial	Variable	Vol. Flow Rate	ft3/min	Pressure Loss	in. H2O std.
91	None	General Polynomial	Variable	Vol. Flow Rate	ft3/min	Pressure Loss	in. H2O std.
101	None	General Polynomial	Variable	Vol. Flow Rate	ft3/min	Pressure Loss	in. H2O std.
201	None	General Polynomial	Variable	Vol. Flow Rate	ft3/min	Pressure Loss	in. H2O std.
211	None	General Polynomial	Variable	Vol. Flow Rate	ft3/min	Pressure Loss	in. H2O std.

AFT Arrow 3.0 Input (10 of 12) 2/21/2006 04:45 PM
DMJMH+N

AFT Arrow Model Main OGTS Case 2 (115°F, Heat Transfer, Fan Curve @ 3550 RPM, Clean Filters)

General Component	Loss Constant a	Loss Constant b	Loss Constant c	Loss Constant d	Loss Constant e
2	-1.165517E-17	0.00224	0	0	0
19	-1.168011E-15	3.346839E-18	3.901916E-07	0	0
20	-1.340247E-14	2.646809E-17	3.506383E-06	0	0
22	2.862294E-17	2.179133E-03	0	0	0
27	-3.989864E-17	9.394737E-04	0	0	0
29	-3.642919E-17	8.496176E-04	0	0	0
51	-1.479936E-17	0.00568	0	0	0
53					
61	-1.165517E-17	0.00112	0	0	0
66	-3.328501E-17	0.0032	0	0	0
69	-3.328501E-17	0.0032	0	0	0
81	-3.610393E-17	0.0325	0	0	0
91	-1.165517E-17	0.00112	0	0	0
101	-7.29126E-18	0.000175	0	0	0
201	-1.165517E-17	0.0056	0	0	0
211	-3.610393E-17	0.0325	0	0	0

Heat Exchanger Table

Heat Exchanger	Name	Object Defined	Elevation	Elevation Units	Initial Pressure	Initial Pressure Units	Database Source	Special Condition	Type
6	ICV	Yes	0	feet				None	
23	WSS Heater	Yes	0	feet				None	
34	SCR	Yes	0	feet				None	

Heat Exchanger	Loss Model	Loss Value	Independent Variable	Ind. Variable Units	Dependent Variable	Dep. Variable Units	Loss Constant a
6	K Constant	1.5					
23	General Polynomial	Variable	Vol. Flow Rate	ft3/min	Pressure Loss	in. H2O std.	-2.633527E-16
34	General Polynomial	Variable	Vol. Flow Rate	ft3/min	Pressure Loss	in. H2O std.	-1.041701E-15

Heat Exchanger	Loss Constant b	Loss Constant c	Loss Constant d	Loss Constant e
6				
23	5.437952E-19	1.75338E-07	0	0
34	2.600104E-03	0	0	0

Tee or Wye Table

Tee or Wye	Name	Object Defined	Elevation	Elevation Units	Initial Pressure	Initial Pressure Units	Database Source	Tee/Wye Type	Loss Type
16	Tee or Wye	Yes	0	feet				Round Straight	Detailed
21	Tee or Wye	Yes	0	feet				Round Straight	Detailed
25	Tee or Wye	Yes	0	feet				Round Straight	Detailed
31	Tee or Wye	Yes	0	feet				Round Straight	Detailed
33	Tee or Wye	Yes	0	feet				Round Straight	Detailed
36	Tee or Wye	Yes	0	feet				Round Straight	Detailed
55	Tee or Wye	Yes	0	feet				Round Straight	Detailed
64	Tee or Wye	Yes	0	feet				Round Straight	Detailed
93	Tee or Wye	Yes	0	feet				Round Straight	Detailed
94	Tee or Wye	Yes	0	feet				Round Straight	Detailed
203	Tee or Wye	Yes	0	feet				Round Straight	Detailed
204	Tee or Wye	Yes	0	feet				Round Straight	Detailed

AFT Arrow 3.0 Input (11 of 12) 2/21/2006 04:45 PM
DMJMH+N

AFT Arrow Model Main OGTS Case 2 (115°F, Heat Transfer, Fan Curve @ 3550 RPM, Clean Filters)

Tee or Wye	Angle	Pipes A, B, C
16	30	
21	90	
25	135	
31	45	
33	45	
36	145	
55	45	
64	45	
93	30	
94	30	
203	45	
204	45	

Valve Table

Valve	Name	Object Defined	Elevation	Elevation Units	Initial Pressure	Initial Pressure Units	Database Source	Special Condition	Exit Valve
8	HV-114	Yes	0	feet				None	No
9	HV-115	Yes	0	feet				None	No
17	36-V-049	Yes	0	feet				None	No
18	HV-125	Yes	0	feet				None	No
24	WSS Valve V-072	Yes	0	feet				None	No
26	HV-313	Yes	0	feet				None	No
28	HV-314a	Yes	0	feet				None	No
30	HV-314b	Yes	0	feet				None	No
32	36-V-017	Yes	0	feet				None	No
37	HV-525	Yes	0	feet				None	No
38	36-V-024	Yes	0	feet				None	No
41	36-V-080	Yes	0	feet				None	No
42	HV-526	Yes	0	feet				None	No
52	HV-111	Yes	0	feet				None	No
54	HV-113	Yes	0	feet				None	No
62	TV-014	Yes	0	feet				Closed	No
65	HV-002	Yes	0	feet				None	No
67	HV-003	Yes	0	feet				None	No
68	HV-004	Yes	0	feet				None	No
70	HV-005	Yes	0	feet				None	No
83	32-V-003	Yes	0	feet			Ball PO=100 (C)	Closed	No
103	36-V-019	Yes	0	feet				None	No
202	FV-331	Yes	0	feet				Closed	No
213	37-V-004	Yes	0	feet			Ball PO=100 (C)	Closed	No

Valve	Exit Pressure	Exit Pressure Units	CdA	CdA Units	Loss Model	Loss Value	Independent Variable	Ind. Variable Units	Dependent Variable	Dep. Variable Units
8					Cv Constant	1194				
9					Cv Constant	1194				
17					Cv Constant	10040				
18					Cv Constant	10040				
24					Cv Constant	10040				
26					Cv Constant	10040				
28					K Constant	0.19				
30					K Constant	0.19				
32					Cv Constant	10040				
37					Cv Constant	21660				
38					Cv Constant	21660				
41					Cv Constant	15430				

AFT Arrow 3.0 Input (12 of 12) 2/21/2006 04:45 PM
DMJMH+N

AFT Arrow Model Main OGTS Case 2 (115°F, Heat Transfer, Fan Curve @ 3550 RPM, Clean Filters)

Valve	Exit Pressure	Exit Pressure Units	CdA	CdA Units	Loss Model	Loss Value	Independent Variable	Ind. Variable Units	Dependent Variable	Dep. Variable Units
42					Cv Constant	15430				
52					Cv Constant	425				
54					Cv Constant	425				
62					Cv Constant	80				
65					Cv Constant	1194				
67					Cv Constant	1194				
68					Cv Constant	1194				
70					Cv Constant	1194				
83					K Constant	0.056598				
103					Cv Constant	8300				
202					Cv Constant	35				
213					K Constant	0.056598				

Valve	Loss Constant a	Loss Constant b	Loss Constant c	Loss Constant d	Loss Constant e
8					
9					
17					
18					
24					
26					
28					
30					
32					
37					
38					
41					
42					
52					
54					
62					
65					
67					
68					
70					
83					
103					
202					
213					

Title: AFT Arrow Model Main OGTS Case 2 (115°F, Heat Transfer, Fan Curve @ 3550 RPM, Clean Filters)
Analysis run on: 2/21/2006 4:38:18 PM
Application version: AFT Arrow Version 3.0 (2005.09.14)
Input File: C:\AFT Products\AFT Arrow\DBVS-OGTS-R2.aro

Execution Time= 19.83 seconds
Total Number Of Pressure Iterations= 967
Total Number Of Flow Iterations= 128
Total Number Of Enthalpy Iterations= 128
Number Of Pipes= 83
Number Of Junctions= 84
Matrix Method= Gaussian Elimination

Length March Solution Method with Mach Number Limits
Segments Per Pipe= 2
Mach Number Increment= 0.01
Pressure Tolerance= 0.0001 relative change
Mass Flow Rate Tolerance= 0.0001 relative change
Enthalpy Tolerance= 0.0001 relative change
Flow Relaxation= (Automatic)
Pressure Relaxation= (Automatic)
Resistance Relaxation= (Automatic)

Fluid Database: AFT Standard
Fluid: Air
Max Fluid Temperature Data= 1000 deg. K
Min Fluid Temperature Data= 200 deg. K
Molecular Weight =28.97 amu
Gas Constant =0.06855 Btu/lbm-R
Critical Pressure =37.25 atm
Critical Temperature =132.41 deg. K
Acentric Factor =0.021
Equation of State= Redlich-Kwong
Enthalpy Model= Generalized
Specific Heat Ratio Accuracy = High
Atmospheric Pressure= 14.3 psia
Gravitational Acceleration= 1 g
Standard Pressure= 14.696 psia
Standard Temperature= 60 deg. F
Turbulent Flow Above Reynolds Number= 4000
Laminar Flow Below Reynolds Number= 2300
Total Inflow= 6.660 lbm/sec
Total Outflow= 6.660 lbm/sec
Total Energy Inflow= 1,857 Btu/s
Total Energy Outflow= 1,700 Btu/s
Total Heat Transferred Into System= -156.8 Btu/s
Maximum Pressure is 15.09 psia at Junction 213 Outlet
Minimum Pressure is 9.942 psia at Junction 40 Inlet
Maximum Static Temperature is 875.0 deg. F at Junction 6 Outlet
Minimum Static Temperature is 70.00 deg. F at Junction 204 Inlet

Compressor/Fan Summary

Jct	Name	Mass Flow (lbm/hr)	Vol. Flow (ft3/min)	DP Stag. (in. H2O std.)	DP Static (in. H2O std.)	Overall Efficiency (Percent)	Speed (Percent)	Overall Power (hp)	Comp. Ratio (Percent)	BEP Q (ft3/sec)
40	Fan N31-025	23.977	10.686	121.3	121.9	67.00	100.0	264.9	143.9	N/A

Jct	BEP Mass (lbm/sec)	% of BEP (Percent)
40	N/A	N/A

Valve Summary

AFT Arrow 3.0 Output (2 of 13) 2/21/2006
DMJMH+N

AFT Arrow Model Main OGTS Case 2 (115°F, Heat Transfer, Fan Curve @ 3550 RPM, Clean Filters)

Jct	Name	Valve Type	Mass Flow (lbm/sec)	DP Stag (psid)	DP Static (psid)	P Static Inlet (psia)	K	Valve State	Cv
8	HV-114	REGULAR	0.3572	0.020483	0.008972	14.088	0.9265	Open	1,194.00
9	HV-115	REGULAR	0.3572	0.009065	0.009072	14.078	0.8577	Open	1,194.00
17	36-V-049	REGULAR	3.6817	0.008159	0.008167	13.590	0.5901	Open	10,040.00
18	HV-125	REGULAR	3.6817	0.008138	0.008146	13.581	0.5891	Open	10,040.00
24	WSS Valve V-072	REGULAR	3.6817	0.010187	0.010203	11.158	0.5873	Open	10,040.00
26	HV-313	REGULAR	3.6817	0.010140	0.010156	11.139	0.5855	Open	10,040.00
28	HV-314a	REGULAR	3.6817	0.003366	0.003372	10.823	0.1900	Open	N/A
30	HV-314b	REGULAR	3.6817	0.003367	0.003372	10.819	0.1900	Open	N/A
32	36-V-017	REGULAR	3.6817	0.010344	0.010361	10.812	0.5835	Open	10,040.00
37	HV-525	REGULAR	6.6604	0.009002	0.009015	9.999	0.6365	Open	21,660.00
38	36-V-024	REGULAR	6.6604	0.009027	0.009040	9.990	0.6372	Open	21,660.00
41	36-V-080	REGULAR	6.6604	0.014420	0.014444	14.330	0.6067	Open	15,430.00
42	HV-526	REGULAR	6.6604	0.014403	0.014427	14.316	0.6061	Open	15,430.00
52	HV-111	REGULAR	0.2684	0.019532	0.019552	14.166	1.3080	Open	425.00
54	HV-113	REGULAR	0.2684	0.019609	0.019630	14.104	1.3077	Open	425.00
X62	TV-014	REGULAR	0.0000	N/A	N/A	14.300	N/A	Closed By User	80.00
65	HV-002	REGULAR	0.6256	0.070376	0.021236	13.990	1.3541	Open	1,194.00
67	HV-003	REGULAR	0.6256	0.020805	0.020842	13.819	0.8605	Open	1,194.00
68	HV-004	REGULAR	0.6256	0.020707	0.020743	13.786	0.8600	Open	1,194.00
70	HV-005	REGULAR	0.6256	0.031609	0.031625	13.664	4.6937	Open	1,194.00
X83	32-V-003	REGULAR	0.0000	N/A	N/A	14.300	N/A	Closed By User	N/A
92	FV-016	FCV	2.3111	0.546235	0.546732	14.150	44.1807	Open	N/A
102	HV-504	FCV	2.9786	3.397632	3.402020	14.234	243.3069	Open	8,300.00
103	36-V-019	REGULAR	2.9786	0.008947	0.008963	10.831	0.4934	Open	8,300.00
X202	FV-331	REGULAR	0.0000	N/A	N/A	14.300	N/A	Closed By User	35.00
X213	37-V-004	REGULAR	0.0000	N/A	N/A	14.300	N/A	Closed By User	N/A

Jct	Cv Est.
8	N/A
9	N/A
17	N/A
18	N/A
24	N/A
26	N/A
28	16,711.8
30	16,711.8
32	N/A
37	N/A
38	N/A
41	N/A
42	N/A
52	N/A
54	N/A
X62	N/A
65	N/A
67	N/A
68	N/A
70	N/A
X83	N/A
92	708.7
102	N/A
103	N/A
X202	N/A

AFT Arrow 3.0 Output (3 of 13) 2/21/2006
DMJMH+N

AFT Arrow Model Main OGTS Case 2 (115°F, Heat Transfer, Fan Curve @ 3550 RPM, Clean Filters)

Jct	Cv Est.
X213	N/A

Heat Exchanger Summary

Jct	Name	Mass Flow (lbm/sec)	DPo (psid)	DP (psid)	DT Loss (deg. F)	T Inlet (deg. F)	T Outlet (deg. F)	Heat Rate In (Btu/s)
6	ICV	0.3572	0.03977	0.02523	-759.99	114.7	874.7	67.07
23	WSS Heater	3.6817	0.12223	0.12301	-21.98	146.5	168.5	19.79
34	SCR	6.6604	0.77691	0.76844	-129.06	142.8	271.9	210.21

Pipe Output Table

Pipe	Name	Mass Flow (lbm/hr)	Vel. In (feet/sec)	Vel. Out (feet/sec)	Mach # In	Mach # Out	dP Stag. Total (in. H2O std.)	P Stag. In (in. H2O std. (g))	P Stag. Out (in. H2O std. (g))
1	Pipe	1,286.1	26.51	26.54	0.022636	0.022662	0.443967	0.00000	-0.443967
2	Pipe	1,286.1	26.58	26.59	0.022703	0.022711	0.150444	-1.15949	-1.309938
3	Pipe	1,286.1	60.43	60.74	0.051616	0.051880	2.002472	-1.37216	-3.374632
4	Pipe	1,286.1	26.74	26.75	0.022838	0.022841	0.064122	-3.48846	-3.552583
5	Pipe	1,286.1	60.78	60.79	0.051912	0.051923	0.080119	-3.61517	-3.695292
6	Pipe	1,286.1	62.37	59.68	0.035112	0.034337	0.100551	-4.79602	-4.896575
7	Pipe	1,286.1	86.25	79.70	0.049626	0.047692	0.347006	-4.91218	-5.259182
8	Pipe	1,286.1	55.24	55.05	0.033051	0.032997	0.026187	-5.82619	-5.852380
9	Pipe	1,286.1	55.09	53.94	0.033018	0.032671	0.105277	-6.10330	-6.208572
16	Pipe	13,254.2	45.77	45.74	0.038013	0.038011	0.205009	-19.07433	-19.279341
17	Pipe	13,254.2	45.77	45.76	0.038034	0.038031	0.010639	-19.50518	-19.515816
18	Pipe	13,254.2	45.79	45.79	0.038054	0.038056	0.051160	-19.74107	-19.792234
19	Pipe	13,254.2	46.43	46.44	0.038593	0.038599	0.090282	-25.01245	-25.102734
20	Pipe	13,254.2	53.40	53.39	0.044386	0.044390	0.062802	-73.35291	-73.415703
21	Pipe	13,254.2	53.39	53.40	0.044390	0.044395	0.057443	-73.41570	-73.473152
22	Pipe	13,254.2	54.99	54.99	0.045716	0.045722	0.060109	-82.76848	-82.828590
23	Pipe	13,254.2	57.61	57.65	0.047063	0.047099	0.292230	-86.21191	-86.504135
24	Pipe	13,254.2	57.70	57.70	0.047142	0.047141	0.002402	-86.78613	-86.788521
25	Pipe	13,254.2	57.73	57.73	0.047165	0.047172	0.080858	-86.94090	-87.021751
26	Pipe	13,254.2	57.78	57.78	0.047215	0.047218	0.067105	-87.30244	-87.369553
27	Pipe	13,254.2	58.60	58.59	0.047893	0.047894	0.075235	-91.70561	-91.780846
28	Pipe	13,254.2	59.37	59.36	0.048530	0.048529	0.002957	-95.75736	-95.760315
29	Pipe	13,254.2	59.38	59.38	0.048544	0.048543	0.002957	-95.85350	-95.856461
30	Pipe	13,254.2	59.40	59.39	0.048558	0.048554	0.011853	-95.94965	-95.961494
31	Pipe	13,254.2	59.39	59.30	0.048554	0.048525	0.085583	-95.96149	-96.047081
32	Pipe	13,254.2	59.35	59.37	0.048571	0.048585	0.091365	-96.33340	-96.424759
33	Pipe	23,977.3	66.00	66.03	0.055031	0.055075	0.315011	-96.45679	-96.771797
35	Pipe	23,977.3	59.85	58.96	0.045329	0.045020	0.386815	-118.27710	-118.663910
36	Pipe	23,977.3	58.96	58.93	0.045020	0.045010	0.004910	-118.66391	-118.668823
37	Pipe	23,977.3	58.99	58.96	0.045051	0.045042	0.004039	-118.91799	-118.922035
38	24" Sch 10	23,977.3	59.02	58.97	0.045083	0.045066	0.008474	-119.17189	-119.180367
39	EJ-604	23,977.3	105.11	105.13	0.080356	0.080386	0.143317	-119.24409	-119.387413
40	EJ-605	23,977.3	68.62	68.60	0.048740	0.048759	0.418493	1.90971	1.491216
41	EJ-605	23,977.3	68.67	68.65	0.048808	0.048801	0.004673	1.09207	1.087400
42	EJ-605	23,977.3	68.72	68.70	0.048850	0.048843	0.004673	0.68873	0.684060
43	Stack	23,977.3	11.42	10.65	0.008116	0.007836	0.025395	0.02930	0.003907
50	Pipe	966.2	45.21	45.39	0.038615	0.038770	1.577697	0.00000	-1.577697
51	Pipe	966.2	45.55	45.59	0.038905	0.038941	0.361789	-2.94534	-3.307131
52	Pipe	966.2	45.66	45.68	0.038994	0.039018	0.233441	-3.84777	-4.081210

AFT Arrow 3.0 Output (4 of 13) 2/21/2006
DMJMH+N

AFT Arrow Model Main OGTS Case 2 (115°F, Heat Transfer, Fan Curve @ 3550 RPM, Clean Filters)

Pipe	Name	Mass Flow (lbm/hr)	Vel. In (feet/sec)	Vel. Out (feet/sec)	Mach # In	Mach # Out	dP Stag. Total (in. H2O std.)	P Stag. In (in. H2O std. (g))	P Stag. Out (in. H2O std. (g))
53	Pipe	966.2	45.76	45.79	0.039080	0.039111	0.312213	-4.70268	-5.014893
54	Pipe	966.2	45.86	45.95	0.039165	0.039244	0.775874	-5.55769	-6.333569
55	Pipe	2,252.3	107.56	107.35	0.073370	0.073317	0.195084	-6.34236	-6.537443
60	Pipe	0.0	0.00	0.00	0.000000	0.000000	0.000000	0.00000	0.000000
61	Pipe	0.0	0.00	0.00	0.000000	0.000000	0.000000	0.00000	0.000000
62	Pipe	0.0	0.00	0.00	0.000000	0.000000	0.000000	-4.82614	-4.826144
63	Pipe	0.0	0.00	0.00	0.000000	0.000000	0.000000	-4.82614	-4.826144
64	Pipe	2,252.3	107.47	106.87	0.073399	0.073207	0.184313	-6.97082	-7.155138
65	Pipe	2,252.3	25.13	25.02	0.017209	0.017171	0.122515	-9.10320	-9.225718
66	Pipe	2,252.3	74.48	71.73	0.051130	0.050201	0.563869	-12.07016	-12.634033
67	Pipe	2,252.3	71.83	71.48	0.050277	0.050174	0.355163	-13.20994	-13.565103
68	Pipe	2,252.3	71.58	70.97	0.050249	0.050064	0.507587	-14.13829	-14.645878
69	Pipe	2,252.3	37.87	37.74	0.026710	0.026663	0.047332	-17.37977	-17.427101
70	8" Sch 10	2,252.3	37.82	34.61	0.026725	0.025573	0.624162	-18.30205	-18.926210
80	Pipe	0.0	0.00	0.00	0.000000	0.000000	0.000000	0.00000	0.000000
81	Pipe	0.0	0.00	0.00	0.000000	0.000000	0.000000	0.00000	0.000000
82	Pipe	0.0	0.00	0.00	0.000000	0.000000	0.000000	0.00000	0.000000
83	Pipe	0.0	0.00	0.00	0.000000	0.000000	0.000000	-15.12134	-15.121338
84	3" Sch 40	0.0	0.00	0.00	0.000000	0.000000	0.000000	-15.12134	-15.121338
90	Pipe	8,320.0	41.10	41.21	0.035104	0.035192	0.989621	0.00000	-0.989621
91	Pipe	8,320.0	41.45	41.50	0.035401	0.035447	0.508458	-3.30816	-3.816619
92	12" Sch 10	8,320.0	43.17	43.22	0.036870	0.036910	0.403261	-18.93677	-19.340031
93	Pipe	11,002.0	57.15	57.15	0.048813	0.048813	0.004778	-19.12182	-19.126600
94	Pipe	11,002.0	57.15	57.16	0.048813	0.048816	0.018373	-19.12660	-19.144972
100	Pipe	10,723.0	43.82	43.90	0.037422	0.037497	0.783080	0.00000	-0.783080
101	Pipe	10,723.0	43.96	43.98	0.037541	0.037560	0.201762	-1.24978	-1.451539
102	Pipe	10,723.0	57.78	57.78	0.049349	0.049350	0.004778	-95.50027	-95.505043
103	14" Sch 10	10,723.0	57.83	57.86	0.049391	0.049421	0.183231	-95.75272	-95.935944
200	Pipe	0.0	0.00	0.00	0.000000	0.000000	0.000000	0.00000	0.000000
201	Pipe	0.0	0.00	0.00	0.000000	0.000000	0.000000	0.00000	0.000000
202	Pipe	0.0	0.00	0.00	0.000000	0.000000	No Solution	No Solution	No Solution
203	Pipe	0.0	0.00	0.00	0.000000	0.000000	0.000000	19.79171	19.791706
X204	Pipe	0.0	0.00	0.00	0.000000	0.000000	54.019897	-19.39581	-73.415703
210	Pipe	0.0	0.00	0.00	0.000000	0.000000	0.000000	0.00000	0.000000
211	Pipe	0.0	0.00	0.00	0.000000	0.000000	0.000000	0.00000	0.000000
212	Pipe	0.0	0.00	0.00	0.000000	0.000000	0.000000	0.00000	0.000000
213	Pipe	0.0	0.00	0.00	0.000000	0.000000	No Solution	No Solution	No Solution
214	Pipe	0.0	0.00	0.00	0.000000	0.000000	No Solution	No Solution	No Solution
215	Pipe	0.0	0.00	0.00	0.000000	0.000000	No Solution	No Solution	No Solution
625	Pipe	0.0	0.00	0.00	0.000000	0.000000	0.000000	-83.12290	-83.122902
631	Pipe	0.0	0.00	0.00	0.000000	0.000000	0.000000	-92.28194	-92.281937
636	Pipe	0.0	0.00	0.00	0.000000	0.000000	0.000000	-114.97424	-114.974243
637	Pipe	2,682.0	58.07	58.07	0.049585	0.049588	0.023495	-18.46524	-18.488737
X638	Pipe	0.0	0.00	0.00	0.000000	0.000000	No Solution	No Solution	19.791706

Pipe	P Static In (in. H2O std. (g))	P Static Out (in. H2O std. (g))	dT Stag. (deg. F)	T Stag. Inlet (deg. F)	T Stag. Outlet (deg. F)	T Static In (deg. F)	T Static Out (deg. F)	dH Stag. (Btu/lbm)	H Stag. In (Btu/lbm)
1	-0.14102	-0.58515	0.00006104	115.00	115.00	114.94	114.94	-1.112E-06	206.1
2	-1.30094	-1.45143	-0.00006104	115.00	115.00	114.94	114.94	8.297E-06	206.1
3	-2.10213	-4.10835	-0.00152588	115.00	115.00	114.70	114.70	2.835E-05	206.1
4	-3.63072	-3.69487	0.00000000	115.00	115.00	114.94	114.94	2.050E-05	206.1
5	-4.34934	-4.42962	0.00000000	115.00	115.00	114.69	114.69	6.822E-06	206.1
6	-5.12790	-5.21415	-57.85656738	875.00	817.14	874.69	816.86	-1.446E+01	393.8
7	-5.57509	-5.87173	-97.89001465	817.14	719.25	816.55	718.74	-2.441E+01	379.4

AFT Arrow 3.0 Output (5 of 13) 2/21/2006
DMJMH+N

AFT Arrow Model Main OGTS Case 2 (115°F, Heat Transfer, Fan Curve @ 3550 RPM, Clean Filters)

Pipe	P Static In (in. H2O std. (g))	P Static Out (in. H2O std. (g))	dT Stag. (deg. F)	T Stag. Inlet (deg. F)	T Stag. Outlet (deg. F)	T Static In (deg. F)	T Static Out (deg. F)	dH Stag. (Btu/lbm)	H Stag. In (Btu/lbm)
8	-6.12009	-6.14532	-3.95532227	719.25	715.30	719.01	715.05	-9.846E-01	355.0
9	-6.39642	-6.49560	-24.76135254	715.30	690.53	715.05	690.30	-6.159E+00	354.0
16	-19.45257	-19.65734	-0.72320557	148.16	147.44	147.99	147.27	-1.766E-01	214.2
17	-19.88339	-19.89397	-0.11047363	147.44	147.33	147.26	147.15	-2.697E-02	214.0
18	-20.11947	-20.17060	-0.09832764	147.33	147.23	147.15	147.06	-2.400E-02	214.0
19	-25.39615	-25.48649	-0.09802246	147.22	147.13	147.05	146.95	-2.393E-02	213.9
20	-73.79420	-73.85701	-0.12487793	147.09	146.97	146.86	146.73	-3.049E-02	213.9
21	-73.85701	-73.91447	-0.07781982	146.97	146.89	146.73	146.66	-1.899E-02	213.9
22	-83.22292	-83.28307	-0.08538818	146.88	146.80	146.63	146.55	-2.084E-02	213.9
23	-86.68808	-86.98060	-0.21606445	168.80	168.58	168.53	168.31	-5.277E-02	219.2
24	-87.26303	-87.26541	-0.03265381	168.58	168.55	168.31	168.28	-7.977E-03	219.2
25	-87.41802	-87.49890	-0.12554932	168.55	168.42	168.27	168.15	-3.067E-02	219.2
26	-87.78002	-87.84710	-0.19665527	168.42	168.23	168.15	167.95	-4.805E-02	219.1
27	-92.18999	-92.26512	-0.29119873	168.22	167.93	167.94	167.65	-7.114E-02	219.1
28	-96.24805	-96.25098	-0.03869629	167.93	167.89	167.64	167.60	-9.455E-03	219.0
29	-96.34433	-96.34726	-0.03869629	167.89	167.85	167.60	167.56	-9.449E-03	219.0
30	-96.44061	-96.45235	-0.15441895	167.85	167.70	167.56	167.41	-3.772E-02	219.0
31	-96.45235	-96.53722	-1.10284424	167.70	166.59	167.41	166.31	-2.695E-01	218.9
32	-96.82401	-96.91548	-0.03778076	166.59	166.56	166.31	166.27	-9.216E-03	218.7
33	-97.08628	-97.40163	-0.32208252	143.47	143.15	143.12	142.79	-7.858E-02	213.0
35	-118.67262	-119.05357	-11.81341553	272.15	260.34	271.86	260.05	-2.895E+00	244.5
36	-119.05357	-119.05830	-0.34368896	260.34	259.99	260.05	259.71	-8.422E-02	241.6
37	-119.30785	-119.31173	-0.28289795	259.99	259.71	259.71	259.43	-6.933E-02	241.5
38	-119.56196	-119.57011	-0.58978271	259.71	259.12	259.43	258.84	-1.445E-01	241.5
39	-120.48051	-120.62412	-0.21466064	259.12	258.91	258.22	258.00	-5.260E-02	241.3
40	1.25532	0.83699	-1.07824707	373.47	372.40	373.09	372.01	-2.652E-01	269.4
41	0.43718	0.43272	-0.26330566	372.40	372.13	372.01	371.75	-6.477E-02	269.1
42	0.03339	0.02891	-0.26300049	372.13	371.87	371.75	371.49	-6.471E-02	269.1
43	0.01122	-0.01296	-55.91900635	371.87	315.95	371.86	315.94	-1.374E+01	269.0
50	-0.41018	-1.98954	-0.00085449	115.00	115.00	114.83	114.83	2.159E-06	206.1
51	-3.35861	-3.72077	-0.00024414	115.00	115.00	114.83	114.83	1.031E-05	206.1
52	-4.26199	-4.49566	-0.00012207	115.00	115.00	114.83	114.83	1.894E-05	206.1
53	-5.11779	-5.43035	-0.00006104	115.00	115.00	114.83	114.82	4.101E-05	206.1
54	-5.97373	-6.75042	0.00061035	115.00	115.00	114.82	114.82	1.488E-04	206.1
55	-7.79123	-7.98352	-2.19519043	444.99	442.79	444.05	441.86	-5.413E-01	287.0
60	0.00000	0.00000	0.00000000	115.00	115.00	115.00	115.00	0.000E+00	206.1
61	0.00000	0.00000	0.00000000	115.00	115.00	115.00	115.00	0.000E+00	206.1
62	-4.82614	-4.82614	0.00000000	547.70	547.70	547.70	547.70	0.000E+00	312.4
63	-4.82614	-4.82614	0.00000000	547.70	547.70	547.70	547.70	0.000E+00	312.4
64	-8.41854	-8.59469	-5.48040771	442.79	437.31	441.86	436.39	-1.351E+00	286.5
65	-9.18253	-9.30468	-4.46020508	437.31	432.85	437.26	432.80	-1.100E+00	285.1
66	-12.76439	-13.30262	-34.17218018	432.85	398.68	432.40	398.26	-8.419E+00	284.0
67	-13.87953	-14.23137	-5.04467773	398.68	393.63	398.26	393.22	-1.242E+00	275.6
68	-14.80556	-15.30745	-8.40863037	393.63	385.23	393.22	384.82	-2.070E+00	274.4
69	-17.56685	-17.61353	-3.12145996	385.22	382.10	385.11	381.99	-7.682E-01	272.3
70	-18.48890	-19.09719	-72.71423340	382.10	309.39	381.99	309.29	-1.787E+01	271.5
80	0.00000	0.00000	0.00000000	115.00	115.00	115.00	115.00	0.000E+00	206.1
81	0.00000	0.00000	0.00000000	115.00	115.00	115.00	115.00	0.000E+00	206.1
82	0.00000	0.00000	0.00000000	115.00	115.00	115.00	115.00	0.000E+00	206.1
83	-15.12134	-15.12134	0.00000000	115.06	115.06	115.06	115.06	0.000E+00	206.1
84	-15.12134	-15.12134	0.00000000	115.06	115.06	115.06	115.06	0.000E+00	206.1
90	-0.33903	-1.32950	-0.00036621	115.00	115.00	114.86	114.86	-3.381E-08	206.1
91	-3.65005	-4.15895	-0.00036621	115.00	115.00	114.86	114.86	8.897E-06	206.1
92	-19.29286	-19.69651	-0.00006104	114.99	114.99	114.83	114.83	5.910E-05	206.1

AFT Arrow 3.0 Output (6 of 13) 2/21/2006
DMJMH+N

AFT Arrow Model Main OGTS Case 2 (115°F, Heat Transfer, Fan Curve @ 3550 RPM, Clean Filters)

Pipe	P Static In (in. H2O std. (g))	P Static Out (in. H2O std. (g))	dT Stag. (deg. F)	T Stag. Inlet (deg. F)	T Stag. Outlet (deg. F)	T Static In (deg. F)	T Static Out (deg. F)	dH Stag. (Btu/lbm)	H Stag. In (Btu/lbm)
93	-19.74538	-19.75015	-0.00006104	115.06	115.06	114.79	114.79	-1.257E-05	206.1
94	-19.75015	-19.76855	-0.00018311	115.06	115.06	114.79	114.79	-4.807E-05	206.1
100	-0.38526	-1.16910	0.00000000	115.00	115.00	114.84	114.84	0.000E+00	206.1
101	-1.63625	-1.83822	-0.00012207	115.00	115.00	114.84	114.84	4.796E-07	206.1
102	-96.00838	-96.01318	0.00006104	114.92	114.92	114.65	114.65	2.504E-05	206.1
103	-96.26128	-96.44482	0.00061035	114.92	114.92	114.65	114.65	1.858E-04	206.1
200	0.00000	0.00000	0.00000000	115.00	115.00	115.00	115.00	0.000E+00	206.1
201	0.00000	0.00000	0.00000000	115.00	115.00	115.00	115.00	0.000E+00	206.1
202	No Solution	No Solution	0.00000000	70.00	70.00	70.00	70.00	-9.502E-03	195.1
203	19.79171	19.79171	0.00000000	70.00	70.00	70.00	70.00	0.000E+00	195.1
X204	-19.39581	-73.41570	76.95624756	70.00	146.97	70.00	146.97	1.879E+01	195.1
210	0.00000	0.00000	0.00000000	115.00	115.00	115.00	115.00	0.000E+00	206.1
211	0.00000	0.00000	0.00000000	115.00	115.00	115.00	115.00	0.000E+00	206.1
212	0.00000	0.00000	0.00000000	115.00	115.00	115.00	115.00	0.000E+00	206.1
213	No Solution	No Solution	45.00000000	70.00	115.00	70.00	115.00	1.097E+01	195.1
214	No Solution	No Solution	0.00000000	115.00	115.00	115.00	115.00	3.434E-03	206.1
215	No Solution	No Solution	0.00000000	115.00	115.00	115.00	115.00	5.307E-03	206.1
625	-83.12290	-83.12290	0.00000000	198.72	198.72	198.72	198.72	0.000E+00	226.5
631	-92.28194	-92.28194	0.00000000	198.72	198.72	198.72	198.72	0.000E+00	226.5
636	-114.97424	-114.97424	0.00000000	289.57	289.57	289.57	289.57	0.000E+00	248.8
637	-19.10976	-19.13330	-0.00073242	115.28	115.28	115.00	115.00	-2.702E-04	206.1
X638	No Solution	19.79171	-45.00000000	115.00	70.00	115.00	70.00	-1.098E+01	206.1

Pipe	H Stag. Out (Btu/lbm)	H Static In (Btu/lbm)	H Static Out (Btu/lbm)	Rho Stag. In (lbm/ft3)	Rho Stag. Out (lbm/ft3)	Heat Transfer Model	Heat Flux (Btu/hr-ft2)	Heat Rate (Btu/hr)
1	206.1	206.1	206.1	0.06719	0.06712	Gen'l Heat Tran.	-1.688E-04	-1.430E-03
2	206.1	206.1	206.1	0.06700	0.06697	Gen'l Heat Tran.	7.755E-04	1.067E-02
3	206.1	206.0	206.0	0.06696	0.06662	Gen'l Heat Tran.	2.343E-03	3.647E-02
4	206.1	206.1	206.1	0.06660	0.06659	Gen'l Heat Tran.	3.213E-03	2.636E-02
5	206.1	206.0	206.0	0.06658	0.06657	Gen'l Heat Tran.	4.540E-03	8.773E-03
6	379.4	393.7	379.3	0.02857	0.02985	Gen'l Heat Tran.	-1.952E+03	-1.860E+04
7	355.0	379.2	354.8	0.02985	0.03230	Gen'l Heat Tran.	-2.015E+03	-3.139E+04
8	354.0	354.9	353.9	0.03225	0.03236	Gen'l Heat Tran.	-1.595E+03	-1.266E+03
9	347.8	353.9	347.8	0.03234	0.03303	Gen'l Heat Tran.	-1.555E+03	-7.922E+03
16	214.0	214.1	213.9	0.06046	0.06050	Gen'l Heat Tran.	-3.794E+01	-2.341E+03
17	214.0	213.9	213.9	0.06046	0.06047	Gen'l Heat Tran.	-3.746E+01	-3.575E+02
18	213.9	213.9	213.9	0.06044	0.06044	Gen'l Heat Tran.	-3.733E+01	-3.181E+02
19	213.9	213.9	213.9	0.05960	0.05959	Gen'l Heat Tran.	-3.722E+01	-3.171E+02
20	213.9	213.9	213.8	0.05184	0.05184	Gen'l Heat Tran.	-3.705E+01	-4.041E+02
21	213.9	213.8	213.8	0.05184	0.05184	Gen'l Heat Tran.	-3.693E+01	-2.518E+02
22	213.8	213.8	213.8	0.05034	0.05034	Gen'l Heat Tran.	-3.683E+01	-2.762E+02
23	219.2	219.2	219.1	0.04805	0.04802	Gen'l Heat Tran.	-6.218E+01	-6.995E+02
24	219.2	219.1	219.1	0.04798	0.04798	Gen'l Heat Tran.	-6.204E+01	-1.057E+02
25	219.1	219.1	219.1	0.04796	0.04795	Gen'l Heat Tran.	-6.195E+01	-4.065E+02
26	219.1	219.1	219.0	0.04791	0.04792	Gen'l Heat Tran.	-6.176E+01	-6.368E+02
27	219.0	219.0	218.9	0.04724	0.04725	Gen'l Heat Tran.	-6.147E+01	-9.429E+02
28	219.0	218.9	218.9	0.04663	0.04664	Gen'l Heat Tran.	-6.128E+01	-1.253E+02
29	219.0	218.9	218.9	0.04662	0.04662	Gen'l Heat Tran.	-6.123E+01	-1.252E+02
30	218.9	218.9	218.9	0.04661	0.04662	Gen'l Heat Tran.	-6.112E+01	-5.000E+02
31	218.7	218.9	218.6	0.04662	0.04669	Gen'l Heat Tran.	-6.039E+01	-3.571E+03
32	218.7	218.6	218.6	0.04664	0.04663	Gen'l Heat Tran.	-5.973E+01	-1.222E+02
33	213.0	212.9	212.9	0.04841	0.04839	Gen'l Heat Tran.	-4.155E+01	-1.884E+03
35	241.6	244.4	241.6	0.03699	0.03754	Gen'l Heat Tran.	-2.052E+02	-6.943E+04
36	241.5	241.6	241.5	0.03754	0.03756	Gen'l Heat Tran.	-1.969E+02	-2.019E+03

AFT Arrow 3.0 Output (7 of 13) 2/21/2006
DMJMH+N

AFT Arrow Model Main OGTS Case 2 (115°F, Heat Transfer, Fan Curve @ 3550 RPM, Clean Filters)

Pipe	H Stag. Out (Btu/lbm)	H Static In (Btu/lbm)	H Static Out (Btu/lbm)	Rho Stag. In (lbm/ft3)	Rho Stag. Out (lbm/ft3)	Heat Transfer Model	Heat Flux (Btu/hr-ft2)	Heat Rate (Btu/hr)
37	241.5	241.5	241.4	0.03752	0.03754	Gen'l Heat Tran.	-1.965E+02	-1.662E+03
38	241.3	241.4	241.3	0.03751	0.03753	Gen'l Heat Tran.	-1.959E+02	-3.465E+03
39	241.3	241.1	241.0	0.03753	0.03752	Gen'l Heat Tran.	-1.749E+02	-1.261E+03
40	269.1	269.3	269.0	0.04655	0.04656	Gen'l Heat Tran.	-3.840E+02	-6.360E+03
41	269.1	269.0	269.0	0.04652	0.04653	Gen'l Heat Tran.	-3.830E+02	-1.553E+03
42	269.0	269.0	268.9	0.04648	0.04650	Gen'l Heat Tran.	-3.826E+02	-1.551E+03
43	255.3	269.0	255.2	0.04642	0.04977	Gen'l Heat Tran.	-1.760E+02	-3.295E+05
50	206.1	206.0	206.0	0.06719	0.06693	Gen'l Heat Tran.	1.813E-04	2.086E-03
51	206.1	206.0	206.0	0.06669	0.06663	Gen'l Heat Tran.	3.348E-03	9.963E-03
52	206.1	206.0	206.0	0.06654	0.06650	Gen'l Heat Tran.	4.420E-03	1.830E-02
53	206.1	206.0	206.0	0.06640	0.06634	Gen'l Heat Tran.	5.394E-03	3.962E-02
54	206.1	206.0	206.0	0.06625	0.06612	Gen'l Heat Tran.	5.780E-03	1.438E-01
55	286.5	286.8	286.2	0.04198	0.04206	Gen'l Heat Tran.	-1.166E+03	-1.219E+03
60	206.1	206.1	206.1	0.06719	0.06719	Gen'l Heat Tran.	0.000E+00	0.000E+00
61	206.1	206.1	206.1	0.06719	0.06719	Gen'l Heat Tran.	0.000E+00	0.000E+00
62	312.4	312.4	312.4	0.03785	0.03785	Gen'l Heat Tran.	0.000E+00	0.000E+00
63	312.4	312.4	312.4	0.03785	0.03785	Gen'l Heat Tran.	0.000E+00	0.000E+00
64	285.1	286.2	284.9	0.04201	0.04225	Gen'l Heat Tran.	-1.152E+03	-3.043E+03
65	284.0	285.1	284.0	0.04204	0.04224	Gen'l Heat Tran.	-6.052E+02	-2.476E+03
66	275.6	283.9	275.5	0.04193	0.04353	Gen'l Heat Tran.	-9.428E+02	-1.896E+04
67	274.4	275.5	274.2	0.04347	0.04368	Gen'l Heat Tran.	-8.809E+02	-2.797E+03
68	272.3	274.2	272.2	0.04362	0.04399	Gen'l Heat Tran.	-8.593E+02	-4.662E+03
69	271.5	272.3	271.5	0.04368	0.04383	Gen'l Heat Tran.	-6.348E+02	-1.730E+03
70	253.6	271.5	253.6	0.04373	0.04779	Gen'l Heat Tran.	-4.203E+02	-4.025E+04
80	206.1	206.1	206.1	0.06719	0.06719	Gen'l Heat Tran.	0.000E+00	0.000E+00
81	206.1	206.1	206.1	0.06719	0.06719	Gen'l Heat Tran.	0.000E+00	0.000E+00
82	206.1	206.1	206.1	0.06719	0.06719	Gen'l Heat Tran.	0.000E+00	0.000E+00
83	206.1	206.1	206.1	0.06462	0.06462	Gen'l Heat Tran.	0.000E+00	0.000E+00
84	206.1	206.1	206.1	0.06462	0.06462	Gen'l Heat Tran.	0.000E+00	0.000E+00
90	206.1	206.0	206.0	0.06719	0.06703	Gen'l Heat Tran.	-1.334E-05	-2.813E-04
91	206.1	206.0	206.0	0.06663	0.06655	Gen'l Heat Tran.	3.423E-03	7.402E-02
92	206.1	206.0	206.0	0.06398	0.06391	Gen'l Heat Tran.	2.166E-02	4.917E-01
93	206.1	206.0	206.0	0.06394	0.06394	Gen'l Heat Tran.	-8.527E-02	-1.383E-01
94	206.1	206.0	206.0	0.06394	0.06394	Gen'l Heat Tran.	-8.507E-02	-5.289E-01
100	206.1	206.0	206.0	0.06719	0.06706	Gen'l Heat Tran.	0.000E+00	0.000E+00
101	206.1	206.0	206.0	0.06698	0.06695	Gen'l Heat Tran.	9.352E-04	5.143E-03
102	206.1	206.0	206.0	0.05099	0.05099	Gen'l Heat Tran.	1.129E-01	2.685E-01
103	206.1	206.0	206.0	0.05094	0.05091	Gen'l Heat Tran.	1.126E-01	1.992E+00
200	206.1	206.1	206.1	0.06719	0.06719	Gen'l Heat Tran.	0.000E+00	0.000E+00
201	206.1	206.1	206.1	0.06719	0.06719	Gen'l Heat Tran.	0.000E+00	0.000E+00
202	195.1	195.1	195.1	0.06920	0.07656	Gen'l Heat Tran.	0.000E+00	0.000E+00
203	195.1	195.1	195.1	0.07657	0.07657	Gen'l Heat Tran.	0.000E+00	0.000E+00
X204	213.9	195.1	213.9	0.06934	0.05184	Gen'l Heat Tran.	0.000E+00	0.000E+00
210	206.1	206.1	206.1	0.06719	0.06719	Gen'l Heat Tran.	0.000E+00	0.000E+00
211	206.1	206.1	206.1	0.06719	0.06719	Gen'l Heat Tran.	0.000E+00	0.000E+00
212	206.1	206.1	206.1	0.06719	0.06719	Gen'l Heat Tran.	0.000E+00	0.000E+00
213	206.1	195.1	206.1	0.07693	0.07144	Gen'l Heat Tran.	0.000E+00	0.000E+00
214	206.1	206.1	206.1	0.07143	0.06847	Gen'l Heat Tran.	0.000E+00	0.000E+00
215	206.1	206.1	206.1	0.06847	0.06390	Gen'l Heat Tran.	0.000E+00	0.000E+00
625	226.5	226.5	226.5	0.04632	0.04632	Gen'l Heat Tran.	0.000E+00	0.000E+00
631	226.5	226.5	226.5	0.04497	0.04497	Gen'l Heat Tran.	0.000E+00	0.000E+00
636	248.8	248.8	248.8	0.03656	0.03656	Gen'l Heat Tran.	0.000E+00	0.000E+00
637	206.1	206.1	206.1	0.06403	0.06402	Gen'l Heat Tran.	-4.564E-01	-7.246E-01
X638	195.1	206.1	195.1	0.06357	0.07657	Gen'l Heat Tran.	0.000E+00	0.000E+00

AFT Arrow 3.0 Output (8 of 13) 2/21/2006
DMJMH+N

AFT Arrow Model Main OGTS Case 2 (115°F, Heat Transfer, Fan Curve @ 3550 RPM, Clean Filters)

All Junction Table

Jct	Name	Mass Flow Thru Junction (lbm/hr)	dP Stag. Total (in. H2O std.)	P Stag. In (in. H2O std. (g))	P Stag. Out (in. H2O std. (g))	P Static In (in. H2O std. (g))
1	Assigned Pressure	1,286.1	0.00000	0.0000	0.00000	-0.14102
2	ICV Filter N02-010	1,286.1	0.71554	-0.4440	-1.15949	-0.58515
3	Area Change	1,286.1	0.06221	-1.3099	-1.37216	-1.45143
4	Area Change	1,286.1	0.11381	-3.3746	-3.48846	-4.10835
5	Area Change	1,286.1	0.06257	-3.5526	-3.61517	-3.69487
6	ICV	1,286.1	1.10073	-3.6953	-4.79602	-4.42962
7	Area Change	1,286.1	0.01561	-4.8966	-4.91218	-5.21415
8	HV-114	1,286.1	0.56700	-5.2592	-5.82619	-5.87173
9	HV-115	1,286.1	0.25092	-5.8524	-6.10330	-6.14532
16	Tee or Wye	N/A	See Losses	-19.0743	-19.07433	-19.52353
17	36-V-049	13,254.2	0.22584	-19.2793	-19.50518	-19.65734
18	HV-125	13,254.2	0.22526	-19.5158	-19.74107	-19.89397
19	Packed Tower	13,254.2	5.22023	-19.7922	-25.01245	-20.17060
20	Venturi/Demister	13,254.2	48.25019	-25.1027	-73.35291	-25.48649
21	Tee or Wye	N/A	0.00000	-73.4157	-73.41570	-73.85701
22	Condenser Demister	13,254.2	9.29533	-73.4732	-82.76848	-73.91447
23	WSS Heater	13,254.2	3.38332	-82.8286	-86.21191	-83.28307
24	WSS Valve V-072	13,254.2	0.28200	-86.5041	-86.78613	-86.98060
25	Tee or Wye	N/A	See Losses	-83.1229	-83.12290	-83.60562
26	HV-313	13,254.2	0.28068	-87.0218	-87.30244	-87.49890
27	HEPA	13,254.2	4.33607	-87.3696	-91.70561	-87.84710
28	HV-314a	13,254.2	0.09317	-95.7603	-95.85350	-96.25098
29	HEGA	13,254.2	3.97651	-91.7808	-95.75736	-92.26512
30	HV-314b	13,254.2	0.09320	-95.8565	-95.94965	-96.34726
31	Tee or Wye	N/A	0.00000	-92.2819	-92.28194	-92.77876
32	36-V-017	13,254.2	0.28632	-96.0471	-96.33340	-96.53722
33	Tee or Wye	N/A	See Losses	-96.4568	-96.45679	-97.01883
34	SCR	23,977.3	21.50530	-96.7718	-118.27710	-97.40163
36	Tee or Wye	N/A	0.00000	-114.9742	-114.97424	-115.36906
37	HV-525	23,977.3	0.24918	-118.6688	-118.91799	-119.05830
38	36-V-024	23,977.3	0.24987	-118.9220	-119.17189	-119.31173
39	Area Change	23,977.3	0.06372	-119.1804	-119.24409	-119.57011
40	Fan N31-025	23,977.3	-121.29713	-119.3874	1.90971	-120.62412
41	36-V-080	23,977.3	0.39916	1.4912	1.09207	0.83699
42	HV-526	23,977.3	0.39868	1.0874	0.68873	0.43272
43	Branch	23,977.3	0.65476	0.6841	0.02930	0.02891
44	Assigned Pressure	23,977.3	0.00000	0.0000	0.00000	-0.01687
50	Assigned Pressure	966.2	0.00000	0.0000	0.00000	-0.41018
51	AWTE Filter N22-026	966.2	1.36765	-1.5777	-2.94534	-1.98954
52	HV-111	966.2	0.54065	-3.3071	-3.84777	-3.72077
53	AWTE	966.2	0.62146	-4.0812	-4.70268	-4.49566
54	HV-113	966.2	0.54279	-5.0149	-5.55769	-5.43035
55	Tee or Wye	N/A	See Losses	-6.3424	-6.34236	-7.14083
60	Assigned Pressure	0.0	0.00000	0.0000	0.00000	0.00000
61	SMF Dilution Filter N02-049	0.0	0.00000	0.0000	0.00000	0.00000
X62	TV-014	0.0	4.82615	0.0000	-4.82614	0.00000
63	Area Change	0.0	0.00000	-4.8261	-4.82614	-4.82614
64	Tee or Wye	N/A	See Losses	-6.9708	-6.97082	-8.41627
65	HV-002	2,252.3	1.94805	-7.1551	-9.10320	-8.59469
66	SMF N02-019	2,252.3	2.84445	-9.2257	-12.07016	-9.30468
67	HV-003	2,252.3	0.57591	-12.6340	-13.20994	-13.30262
68	HV-004	2,252.3	0.57318	-13.5651	-14.13829	-14.23137

AFT Arrow 3.0 Output (9 of 13) 2/21/2006
DMJMH+N

AFT Arrow Model Main OGTS Case 2 (115°F, Heat Transfer, Fan Curve @ 3550 RPM, Clean Filters)

Jct	Name	Mass Flow Thru Junction (lbm/hr)	dP Stag. Total (in. H2O std.)	P Stag. In (in. H2O std. (g))	P Stag. Out (in. H2O std. (g))	P Static In (in. H2O std. (g))
69	SMF N02-020	2,252.3	2.73389	-14.6459	-17.37977	-15.30745
70	HV-005	2,252.3	0.87497	-17.4271	-18.30205	-17.61353
80	Assigned Pressure	0.0	0.00000	0.0000	0.00000	0.00000
81	WRS Tank Filter	0.0	0.00000	0.0000	0.00000	0.00000
82	Area Change	0.0	0.00000	0.0000	0.00000	0.00000
X83	32-V-003	0.0	15.12133	0.0000	-15.12134	0.00000
84	Area Change	0.0	0.00000	-15.1213	-15.12134	-15.12134
90	Assigned Pressure	8,320.0	0.00000	0.0000	0.00000	-0.33903
91	WSS Filter N02-101/102	8,320.0	2.31852	-0.9896	-3.30816	-1.32950
92	FV-016	8,320.0	15.12015	-3.8166	-18.93677	-4.15895
93	Tee or Wye	N/A	See Losses	-19.1218	-19.12182	-19.63796
94	Tee or Wye	N/A	0.00000	-19.1266	-19.12660	-19.75015
100	Assigned Pressure	10,723.0	0.00000	0.0000	0.00000	-0.38526
101	SCR Filter N02-022	10,723.0	0.46669	-0.7831	-1.24978	-1.16910
102	HV-504	10,723.0	94.04871	-1.4515	-95.50027	-1.83822
103	36-V-019	10,723.0	0.24767	-95.5050	-95.75272	-96.01318
200	Assigned Pressure	0.0	0.00000	0.0000	0.00000	0.00000
201	WSS Filter N02-093	0.0	0.00000	0.0000	0.00000	0.00000
X202	FV-331	0.0	20.18748	0.0000	-20.18750	0.00000
203	Tee or Wye	0.0	0.00000	19.7917	19.79171	19.79171
204	Tee or Wye	0.0	0.00000	19.7917	19.79171	19.79171
210	Assigned Pressure	0.0	0.00000	0.0000	0.00000	0.00000
211	SWS Tank Filter N02-014A	0.0	0.00000	0.0000	0.00000	0.00000
212	Area Change	0.0	0.00000	0.0000	0.00000	0.00000
X213	37-V-004	0.0	-21.77087	0.0000	21.77087	0.00000
214	Area Change	0.0	No Solution	No Solution	No Solution	No Solution
215	Area Change	0.0	No Solution	No Solution	No Solution	No Solution
625	Dead End	0.0	0.00000	-83.1229	-83.12290	-83.12290
631	Dead End	0.0	0.00000	-92.2819	-92.28194	-92.28194
636	Dead End	0.0	0.00000	-114.9742	-114.97424	-114.97424
637	Waste Feed Blower	2,682.0	0.00000	-18.4653	-18.46524	-19.10978
638	Assigned Flow Vac Pump	0.0	No Solution	No Solution	No Solution	No Solution

Jct	P Static Out (in. H2O std. (g))	dT Stag. (deg. F)	T Stag. Inlet (deg. F)	T Stag. Outlet (deg. F)	T Static In (deg. F)	T Static Out (deg. F)	dH Stag. (Btu/lbm)	H Stag. In (Btu/lbm)	H Stag. Out (Btu/lbm)
1	-0.14102	0.00000000	115.00	115.00	115.00	115.00	0.000	206.1	206.1
2	-1.30094	-0.00061035	115.00	115.00	114.94	114.94	0.000	206.1	206.1
3	-2.10213	-0.00036621	115.00	115.00	114.94	114.70	0.000	206.1	206.1
4	-3.63072	0.00024414	115.00	115.00	114.70	114.94	0.000	206.1	206.1
5	-4.34934	-0.00036621	115.00	115.00	114.94	114.69	0.000	206.1	206.1
6	-5.12790	760.00001526	115.00	875.00	114.69	874.69	-187.755	206.1	393.8
7	-5.57509	0.00012207	817.14	817.14	816.86	816.55	0.000	379.4	379.4
8	-6.12009	-0.00012207	719.25	719.25	718.74	719.01	0.000	355.0	355.0
9	-6.39642	0.00000000	715.30	715.30	715.05	715.05	0.000	354.0	354.0
16	-19.52353	0.00000000	148.16	148.16	147.96	147.96	N/A	214.2	214.2
17	-19.88339	-0.00012207	147.44	147.44	147.27	147.26	0.000	214.0	214.0
18	-20.11947	-0.00012207	147.33	147.33	147.15	147.15	0.000	214.0	214.0
19	-25.39615	-0.00372314	147.23	147.22	147.06	147.05	0.000	213.9	213.9
20	-73.79420	-0.03430176	147.13	147.09	146.95	146.86	0.000	213.9	213.9
21	-73.85701	0.00000000	146.97	146.97	146.73	146.73	N/A	213.9	213.9
22	-83.22292	-0.00659180	146.89	146.88	146.66	146.63	0.000	213.9	213.9
23	-86.68808	22.00000000	146.80	168.80	146.55	168.53	-5.374	213.8	219.2
24	-87.26303	-0.00018311	168.58	168.58	168.31	168.31	0.000	219.2	219.2
25	-83.60562	0.00000000	198.72	198.72	198.44	198.44	N/A	226.5	226.5

AFT Arrow 3.0 Output (10 of 13) 2/21/2006
DMJMH+N

AFT Arrow Model Main OGTS Case 2 (115°F, Heat Transfer, Fan Curve @ 3550 RPM, Clean Filters)

Jct	P Static Out (in. H2O std. (g))	dT Stag. (deg. F)	T Stag. Inlet (deg. F)	T Stag. Outlet (deg. F)	T Static In (deg. F)	T Static Out (deg. F)	dH Stag. (Btu/lbm)	H Stag. In (Btu/lbm)	H Stag. Out (Btu/lbm)
26	-87.78002	-0.00018311	168.42	168.42	168.15	168.15	0.000	219.1	219.1
27	-92.18999	-0.00286865	168.23	168.22	167.95	167.94	0.000	219.1	219.1
28	-96.34433	-0.00006104	167.89	167.89	167.60	167.60	0.000	219.0	219.0
29	-96.24805	-0.00256348	167.93	167.93	167.65	167.64	0.000	219.0	219.0
30	-96.44061	-0.00006104	167.85	167.85	167.56	167.56	0.000	219.0	219.0
31	-92.77876	0.00000000	198.72	198.72	198.41	198.41	N/A	226.5	226.5
32	-96.82401	-0.00018311	166.59	166.59	166.31	166.31	0.000	218.7	218.7
33	-97.01883	0.00000000	143.48	143.48	143.16	143.16	N/A	213.0	213.0
34	-118.67262	128.99998474	143.15	272.15	142.79	271.86	-31.562	213.0	244.5
36	-115.36906	0.00000000	289.57	289.57	289.28	289.28	N/A	248.8	248.8
37	-119.30785	-0.00012207	259.99	259.99	259.71	259.71	0.000	241.5	241.5
38	-119.56196	-0.00012207	259.71	259.71	259.43	259.43	0.000	241.5	241.5
39	-120.48051	-0.00024414	259.12	259.12	258.84	258.22	0.000	241.3	241.3
40	1.25532	114.56896973	258.91	373.47	258.00	373.09	-28.120	241.3	269.4
41	0.43718	-0.00012207	372.40	372.40	372.01	372.01	0.000	269.1	269.1
42	0.03339	-0.00012207	372.13	372.13	371.75	371.75	0.000	269.1	269.1
43	0.01122	0.00000000	371.87	371.87	371.49	371.86	0.000	269.0	269.0
44	-0.01687	0.00000000	115.00	115.00	115.00	115.00	0.000	206.1	206.1
50	-0.41018	0.00000000	115.00	115.00	115.00	115.00	0.000	206.1	206.1
51	-3.35861	-0.00109863	115.00	115.00	114.83	114.83	0.000	206.1	206.1
52	-4.26199	-0.00042725	115.00	115.00	114.83	114.83	0.000	206.1	206.1
53	-5.11779	-0.00054932	115.00	115.00	114.83	114.83	0.000	206.1	206.1
54	-5.97373	-0.00042725	115.00	115.00	114.82	114.82	0.000	206.1	206.1
55	-7.14083	0.00000000	444.99	444.99	444.47	444.47	N/A	287.0	287.0
60	0.00000	0.00000000	115.00	115.00	115.00	115.00	0.000	206.1	206.1
61	0.00000	0.00000000	115.00	115.00	115.00	115.00	0.000	206.1	206.1
X62	-4.82614	432.70045471	115.00	547.70	115.00	547.70	0.000	206.1	312.4
63	-4.82614	0.00000000	547.70	547.70	547.70	547.70	0.000	312.4	312.4
64	-8.41627	0.00000000	442.79	442.79	441.86	441.86	N/A	286.5	286.5
65	-9.18253	-0.00048828	437.31	437.31	436.39	437.26	0.000	285.1	285.1
66	-12.76439	-0.00054932	432.85	432.85	432.80	432.40	0.000	284.0	284.0
67	-13.87953	-0.00012207	398.68	398.68	398.26	398.26	0.000	275.6	275.6
68	-14.80556	-0.00018311	393.63	393.63	393.22	393.22	0.000	274.4	274.4
69	-17.56685	-0.00067139	385.23	385.22	384.82	385.11	0.000	272.3	272.3
70	-18.48890	-0.00024414	382.10	382.10	381.99	381.99	0.000	271.5	271.5
80	0.00000	0.00000000	115.00	115.00	115.00	115.00	0.000	206.1	206.1
81	0.00000	0.00000000	115.00	115.00	115.00	115.00	0.000	206.1	206.1
82	0.00000	0.00000000	115.00	115.00	115.00	115.00	0.000	206.1	206.1
X83	-15.12134	0.05676270	115.00	115.06	115.00	115.06	0.000	206.1	206.1
84	-15.12134	0.00000000	115.06	115.06	115.06	115.06	0.000	206.1	206.1
90	-0.33903	0.00000000	115.00	115.00	115.00	115.00	0.000	206.1	206.1
91	-3.65005	-0.00189209	115.00	115.00	114.86	114.86	0.000	206.1	206.1
92	-19.29286	-0.01226807	115.00	114.99	114.86	114.83	0.000	206.1	206.1
93	-19.63796	0.00000000	115.06	115.06	114.83	114.83	N/A	206.1	206.1
94	-19.75015	0.00000000	115.06	115.06	114.79	114.79	N/A	206.1	206.1
100	-0.38526	0.00000000	115.00	115.00	115.00	115.00	0.000	206.1	206.1
101	-1.63625	-0.00061035	115.00	115.00	114.84	114.84	0.000	206.1	206.1
102	-96.00838	-0.07629395	115.00	114.92	114.84	114.65	0.000	206.1	206.1
103	-96.26128	-0.00018311	114.92	114.92	114.65	114.65	0.000	206.1	206.1
200	0.00000	0.00000000	115.00	115.00	115.00	115.00	0.000	206.1	206.1
201	0.00000	0.00000000	115.00	115.00	115.00	115.00	0.000	206.1	206.1
X202	-20.18750	-45.00000000	115.00	70.00	115.00	70.00	0.000	206.1	195.1
203	19.79171	0.00000000	70.00	70.00	70.00	70.00	N/A	195.1	195.1
204	19.79171	0.00000000	70.00	70.00	70.00	70.00	N/A	195.1	195.1

AFT Arrow 3.0 Output (11 of 13) 2/21/2006
DMJMH+N

AFT Arrow Model Main OGTS Case 2 (115°F, Heat Transfer, Fan Curve @ 3550 RPM, Clean Filters)

Jct	P Static Out (in. H2O std. (g))	dT Stag. (deg. F)	T Stag. Inlet (deg. F)	T Stag. Outlet (deg. F)	T Static In (deg. F)	T Static Out (deg. F)	dH Stag. (Btu/lbm)	H Stag. In (Btu/lbm)	H Stag. Out (Btu/lbm)
210	0.00000	0.00000000	115.00	115.00	115.00	115.00	0.000	206.1	206.1
211	0.00000	0.00000000	115.00	115.00	115.00	115.00	0.000	206.1	206.1
212	0.00000	0.00000000	115.00	115.00	115.00	115.00	0.000	206.1	206.1
X213	21.77087	-45.00000000	115.00	70.00	115.00	70.00	0.000	206.1	195.1
214	No Solution	No Solution	No Solution	No Solution	No Solution	No Solution	0.000	No Solution	No Solution
215	No Solution	No Solution	No Solution	No Solution	No Solution	No Solution	0.000	No Solution	No Solution
625	-83.12290	0.00000000	198.72	198.72	198.72	198.72	0.000	226.5	226.5
631	-92.28194	0.00000000	198.72	198.72	198.72	198.72	0.000	226.5	226.5
636	-114.97424	0.00000000	289.57	289.57	289.57	289.57	0.000	248.8	248.8
637	-19.10976	0.00000000	115.28	115.28	115.00	115.00	0.000	206.1	206.1
638	No Solution	No Solution	No Solution	No Solution	No Solution	No Solution	0.000	No Solution	No Solution

Jct	H Static In (Btu/lbm)	H Static Out (Btu/lbm)	Sonic Area (inches2)
1	206.1	206.1	1.1286
2	206.1	206.1	1.1298
3	206.1	206.0	1.1323
4	206.0	206.1	1.1383
5	206.1	206.0	1.1388
6	206.0	393.7	1.1392
7	379.3	379.2	1.7090
8	354.8	354.9	1.6429
9	353.9	353.9	1.6426
16	214.1	214.1	N/A
17	213.9	213.9	12.5687
18	213.9	213.9	12.5755
19	213.9	213.9	12.5837
20	213.9	213.9	12.7629
21	213.8	213.8	N/A
22	213.8	213.8	14.6751
23	213.8	219.2	15.1126
24	219.1	219.1	15.5661
25	226.5	226.5	N/A
26	219.1	219.1	15.5902
27	219.0	219.0	15.6053
28	218.9	218.9	16.0374
29	218.9	218.9	15.8280
30	218.9	218.9	16.0420
31	226.5	226.5	N/A
32	218.6	218.6	16.0361
33	213.0	213.0	N/A
34	212.9	244.4	28.5271
36	248.7	248.7	N/A
37	241.5	241.5	33.6514
38	241.4	241.4	33.6755
39	241.3	241.1	33.6930
40	241.0	269.3	33.7131
41	269.0	269.0	25.2549
42	269.0	269.0	25.2766
43	268.9	269.0	N/A
44	206.1	206.1	24.4683
50	206.1	206.1	0.8478
51	206.0	206.0	0.8512
52	206.0	206.0	0.8550

AFT Arrow 3.0 Output (12 of 13) 2/21/2006
DMJMH+N

AFT Arrow Model Main OGTS Case 2 (115°F, Heat Transfer, Fan Curve @ 3550 RPM, Clean Filters)

Jct	H Static In (Btu/lbm)	H Static Out (Btu/lbm)	Sonic Area (inches2)
53	206.0	206.0	0.8567
54	206.0	206.0	0.8587
55	286.9	286.9	N/A
60	206.1	206.1	0.0000
61	206.1	206.1	0.0000
X62	206.1	312.4	0.0000
63	312.4	312.4	0.0000
64	286.2	286.2	N/A
65	284.9	285.1	2.5186
66	284.0	283.9	2.5258
67	275.5	275.5	2.4986
68	274.2	274.2	2.4972
69	272.2	272.3	2.4918
70	271.5	271.5	2.5055
80	206.1	206.1	0.0000
81	206.1	206.1	0.0000
82	206.1	206.1	0.0000
X83	206.1	206.1	0.0000
84	206.1	206.1	0.0000
90	206.1	206.1	7.3009
91	206.0	206.0	7.3192
92	206.0	206.0	7.3720
93	206.0	206.0	N/A
94	206.0	206.0	N/A
100	206.1	206.1	9.4096
101	206.0	206.0	9.4282
102	206.0	206.0	9.4442
103	206.0	206.0	12.4012
200	206.1	206.1	0.0000
201	206.1	206.1	0.0000
X202	206.1	195.1	0.0000
203	195.1	195.1	N/A
204	195.1	195.1	N/A
210	206.1	206.1	0.0000
211	206.1	206.1	0.0000
212	206.1	206.1	0.0000
X213	206.1	195.1	0.0000
214	No Solution	No Solution	0.0000
215	No Solution	No Solution	0.0000
625	226.5	226.5	0.0000
631	226.5	226.5	0.0000
636	248.8	248.8	0.0000
637	206.1	206.1	2.4693
638	No Solution	No Solution	0.0000

Junction Loss Table

Jct	Pipe #	Pipe Dir.	dP Stag. Total (in. H2O std.)
16	P94	In	-0.07065
	P16	Out	0.000
	P70	In	0.1481
21	P21	Out	0.000
	P20	In	0.000

AFT Arrow 3.0 Output (13 of 13) 2/21/2006
DMJMH+N

AFT Arrow Model Main OGTS Case 2 (115°F, Heat Transfer, Fan Curve @ 3550 RPM, Clean Filters)

Jct	Pipe #	Pipe Dir.	dP Stag. Total (in. H2O std.)
	P204	In	0.000
25	P24	In	0.000
	P625	In	0.000
	P25	Out	3.818
31	P30	In	0.000
	P31	Out	0.000
	P631	In	0.000
33	P32	In	0.03202
	P33	Out	0.000
	P103	In	0.5208
36	P35	In	0.000
	P36	Out	0.000
	P636	In	0.000
55	P9	In	0.1338
	P55	Out	0.000
	P54	In	8.806E-03
64	P63	In	0.000
	P64	Out	0.000
	P55	In	0.4334
93	P92	In	-0.2182
	P93	Out	0.000
	P637	In	0.6331
94	P93	In	0.000
	P94	Out	0.000
	P84	In	0.000
203	P202	In	0.000
	P203	Out	0.000
	P638	In	0.000
204	P203	In	0.000
	P204	Out	0.000
	P215	In	0.000

This page intentionally left blank.

Title: AFT Arrow Model Main OGTS Case 3 (115°F, Heat Transfer, Fan Curve @ 3550 RPM, Dirty Filters)
Input File: C:\AFT Products\AFT Arrow\DBVS-OGTS-R2.aro

Number Of Pipes= 83
Number Of Junctions= 84

Length March Solution Method with Mach Number Limits
Segments Per Pipe= 2
Mach Number Increment= 0.01
Pressure Tolerance= 0.0001 relative change
Mass Flow Rate Tolerance= 0.0001 relative change
Enthalpy Tolerance= 0.0001 relative change
Flow Relaxation= (Automatic)
Pressure Relaxation= (Automatic)
Resistance Relaxation= (Automatic)

Fluid Database: AFT Standard
Fluid: Air
Max Fluid Temperature Data= 1000 deg. K
Min Fluid Temperature Data= 200 deg. K
Molecular Weight =28.97 amu
Gas Constant =0.06855 Btu/lbm-R
Critical Pressure =37.25 atm
Critical Temperature =132.41 deg. K
Acentric Factor =0.021
Equation of State= Redlich-Kwong
Enthalpy Model= Generalized
Specific Heat Ratio Accuracy = High
Atmospheric Pressure= 14.3 psia
Gravitational Acceleration= 1 g
Standard Pressure= 14.696 psia
Standard Temperature= 60 deg. F
Turbulent Flow Above Reynolds Number= 4000
Laminar Flow Below Reynolds Number= 2300

Pipe Input Table

Pipe	Name	Pipe Defined	Length	Length Units	Hydraulic Diameter	Hydraulic Diam. Units	Friction Data Set	Roughness	Roughness Units	Losses (K)
1	Pipe	Yes	64	inches	6.065	inches	Unspecified	0.00015	feet	2.93
2	Pipe	Yes	104	inches	6.065	inches	Unspecified	0.00015	feet	0.71
3	Pipe	Yes	177.167	inches	4.026	inches	Unspecified	0.00015	feet	1.855
4	Pipe	Yes	62	inches	6.065	inches	Unspecified	0.00015	feet	0.24
5	Pipe	Yes	22	inches	4.026	inches	Unspecified	0.00015	feet	0
6	Pipe	Yes	72	inches	6.065	inches	Unspecified	0.00015	feet	0.08
7	Pipe	Yes	141.5	inches	5.047	inches	Unspecified	0.00015	feet	0
8	Pipe	Yes	6	inches	6.065	inches	Unspecified	0.00015	feet	0.07
9	Pipe	Yes	38.5	inches	6.065	inches	Unspecified	0.00015	feet	0.24
16	Pipe	Yes	181	inches	15.624	inches	Unspecified	0.00015	feet	0.36
17	Pipe	Yes	28	inches	15.624	inches	Unspecified	0.00015	feet	0
18	Pipe	Yes	25	inches	15.624	inches	Unspecified	0.00015	feet	0.11
19	Pipe	Yes	25	inches	15.624	inches	Unspecified	0.00015	feet	0.21
20	Pipe	Yes	32	inches	15.624	inches	Unspecified	0.00015	feet	0.11
21	Pipe	Yes	20	inches	15.624	inches	Unspecified	0.00015	feet	0.11
22	Pipe	Yes	22	inches	15.624	inches	Unspecified	0.00015	feet	0.11
23	Pipe	Yes	33	inches	15.624	inches	Unspecified	0.00015	feet	0.58
24	Pipe	Yes	5	inches	15.624	inches	Unspecified	0.00015	feet	0
25	Pipe	Yes	19.25	inches	15.624	inches	Unspecified	0.00015	feet	0.15
26	Pipe	Yes	30.25	inches	15.624	inches	Unspecified	0.00015	feet	0.11
27	Pipe	Yes	45	inches	15.624	inches	Unspecified	0.00015	feet	0.11
28	Pipe	Yes	6	inches	15.624	inches	Unspecified	0.00015	feet	0
29	Pipe	Yes	6	inches	15.624	inches	Unspecified	0.00015	feet	0
30	Pipe	Yes	24	inches	15.624	inches	Unspecified	0.00015	feet	0

AFT Arrow 3.0 Input (2 of 12) 2/22/2006 08:33 AM
DMJMH+N

AFT Arrow Model Main OGTS Case 3 (115°F, Heat Transfer, Fan Curve @ 3550 RPM, Dirty Filters)

Pipe	Name	Pipe Defined	Length	Length Units	Hydraulic Diameter	Hydraulic Diam. Units	Friction Data Set	Roughness	Roughness Units	Losses (K)
31	Pipe	Yes	173.5	inches	15.624	inches	Unspecified	0.00015	feet	0
32	Pipe	Yes	6	inches	15.624	inches	Unspecified	0.00015	feet	0.18
33	Pipe	Yes	106.25	inches	19.564	inches	Unspecified	0.00015	feet	0.42
35	Pipe	Yes	660	inches	23.5	inches	Unspecified	0.00015	feet	0.57
36	Pipe	Yes	20	inches	23.5	inches	Unspecified	0.00015	feet	0
37	Pipe	Yes	16.5	inches	23.5	inches	Unspecified	0.00015	feet	0
38	24" Sch 10	Yes	34.5	inches	23.5	inches	Unspecified	0.00015	feet	0
39	EJ-604	Yes	18.75	inches	17.624	inches	Unspecified	0.00015	feet	0.1
40	EJ-605	Yes	38.8	inches	19.564	inches	Unspecified	0.00015	feet	0.61
41	EJ-605	Yes	9.5	inches	19.564	inches	Unspecified	0.00015	feet	0
42	EJ-605	Yes	9.5	inches	19.564	inches	Unspecified	0.00015	feet	0
43	Stack	Yes	149	feet	48	inches	Unspecified	0.00015	feet	0.88
50	Pipe	Yes	131	inches	4.026	inches	Unspecified	0.00015	feet	3.16
51	Pipe	Yes	33.875	inches	4.026	inches	Unspecified	0.00015	feet	0.7
52	Pipe	Yes	47.125	inches	4.026	inches	Unspecified	0.00015	feet	0.32
53	Pipe	Yes	83.625	inches	4.026	inches	Unspecified	0.00015	feet	0.32
54	Pipe	Yes	283.25	inches	4.026	inches	Unspecified	0.00015	feet	0.4
55	Pipe	Yes	9.5	inches	5.047	inches	Unspecified	0.00015	feet	0.1
60	Pipe	Yes	120	inches	8.329	inches	Unspecified	0.00015	feet	3.17
61	Pipe	Yes	91	inches	6.065	inches	Unspecified	0.00015	feet	1.35
62	Pipe	Yes	191.5	inches	6.065	inches	Unspecified	0.00015	feet	0.2
63	Pipe	Yes	46.75	inches	5.047	inches	Unspecified	0.00015	feet	0.74
64	Pipe	Yes	24	inches	5.047	inches	Unspecified	0.00015	feet	4.031416E-02
65	Pipe	Yes	18	inches	10.42	inches	Unspecified	0.00015	feet	1.514091
66	Pipe	Yes	152	inches	6.065	inches	Unspecified	0.00015	feet	0.3703681
67	Pipe	Yes	24	inches	6.065	inches	Unspecified	0.00015	feet	0.45909
68	Pipe	Yes	41	inches	6.065	inches	Unspecified	0.00015	feet	0.64
69	Pipe	Yes	15	inches	8.329	inches	Unspecified	0.00015	feet	0.22
70	8" Sch 10	Yes	527	inches	8.329	inches	Unspecified	0.00015	feet	2.3
80	Pipe	Yes	6	inches	1.61	inches	Unspecified	0.00015	feet	0
81	Pipe	Yes	24	inches	1.61	inches	Unspecified	0.00015	feet	1
82	Pipe	Yes	18	inches	2.067	inches	Unspecified	0.00015	feet	0.47
83	Pipe	Yes	149	inches	2.067	inches	Unspecified	0.00015	feet	2.52
84	3" Sch 40	Yes	804	inches	3.068	inches	Unspecified	0.00015	feet	1.28
90	Pipe	Yes	78	inches	12.39	inches	Unspecified	0.00015	feet	2.81
91	Pipe	Yes	80	inches	12.39	inches	Unspecified	0.00015	feet	1.38
92	12" Sch 10	Yes	84	inches	12.39	inches	Unspecified	0.00015	feet	1.02
93	Pipe	Yes	6	inches	12.39	inches	Unspecified	0.00015	feet	0
94	Pipe	Yes	23	inches	12.39	inches	Unspecified	0.00015	feet	0
100	Pipe	Yes	50.5	inches	13.624	inches	Unspecified	0.00015	feet	1.97
101	Pipe	Yes	18.5	inches	13.624	inches	Unspecified	0.00015	feet	0.5
102	Pipe	Yes	8	inches	13.624	inches	Unspecified	0.00015	feet	0
103	14" Sch 10	Yes	59.5	inches	13.624	inches	Unspecified	0.00015	feet	0.29
200	Pipe	Yes	20	inches	12.39	inches	Unspecified	0.00015	feet	0.79
201	Pipe	Yes	10.5	inches	6.065	inches	Unspecified	0.00015	feet	1.26
202	Pipe	Yes	6	inches	6.065	inches	Unspecified	0.00015	feet	0
203	Pipe	Yes	17	inches	6.065	inches	Unspecified	0.00015	feet	0.33
204	Pipe	Yes	62	inches	8.329	inches	Unspecified	0.00015	feet	0.81
210	Pipe	Yes	6	inches	1.61	inches	Unspecified	0.00015	feet	0
211	Pipe	Yes	20	inches	1.61	inches	Unspecified	0.00015	feet	1
212	Pipe	Yes	18	inches	2.067	inches	Unspecified	0.00015	feet	0.47
213	Pipe	Yes	181	inches	4.026	inches	Unspecified	0.00015	feet	0.9
214	Pipe	Yes	313.5	inches	3.068	inches	Unspecified	0.00015	feet	0.02
215	Pipe	Yes	1046	inches	4.026	inches	Unspecified	0.00015	feet	0.9
625	Pipe	Yes	6	inches	15.624	inches	Unspecified	0.00015	feet	0

AFT Arrow 3.0 Input (3 of 12) 2/22/2006 08:33 AM
DMJMH+N

AFT Arrow Model Main OGTS Case 3 (115°F, Heat Transfer, Fan Curve @ 3550 RPM, Dirty Filters)

Pipe	Name	Pipe Defined	Length	Length Units	Hydraulic Diameter	Hydraulic Diam. Units	Friction Data Set	Roughness	Roughness Units	Losses (K)
631	Pipe	Yes	6	inches	15.624	inches	Unspecified	0.00015	feet	0
636	Pipe	Yes	6	inches	23.5	inches	Unspecified	0.00015	feet	0
637	Pipe	Yes	1	feet	6.065	inches	Unspecified	0.00015	feet	0
638	Pipe	Yes	12	inches	6.065	inches	Unspecified	0.00015	feet	0

Pipe	Initial Flow	Initial Flow Units	Junctions (Up,Down)	Geometry	Material	Size	Type	Thermal Boundary
1			1, 2	Cylindrical Pipe	Stainless Steel	6 inch	schedule 40	General Heat Transfer
2			2, 3	Cylindrical Pipe	Stainless Steel	6 inch	schedule 40	General Heat Transfer
3			3, 4	Cylindrical Pipe	Stainless Steel	4 inch	schedule 40	General Heat Transfer
4			4, 5	Cylindrical Pipe	Stainless Steel	6 inch	schedule 40	General Heat Transfer
5			5, 6	Cylindrical Pipe	Stainless Steel	4 inch	schedule 40	General Heat Transfer
6			6, 7	Cylindrical Pipe	Stainless Steel	6 inch	schedule 40	General Heat Transfer
7			7, 8	Cylindrical Pipe	Stainless Steel	5 inch	schedule 40	General Heat Transfer
8			8, 9	Cylindrical Pipe	Stainless Steel	6 inch	schedule 40	General Heat Transfer
9			9, 55	Cylindrical Pipe	Stainless Steel	6 inch	schedule 40	General Heat Transfer
16			16, 17	Cylindrical Pipe	Stainless Steel	16 inch	schedule 10	General Heat Transfer
17			17, 18	Cylindrical Pipe	Stainless Steel	16 inch	schedule 10	General Heat Transfer
18			18, 19	Cylindrical Pipe	Stainless Steel	16 inch	schedule 10	General Heat Transfer
19			19, 20	Cylindrical Pipe	Stainless Steel	16 inch	schedule 10	General Heat Transfer
20			20, 21	Cylindrical Pipe	Stainless Steel	16 inch	schedule 10	General Heat Transfer
21			21, 22	Cylindrical Pipe	Stainless Steel	16 inch	schedule 10	General Heat Transfer
22			22, 23	Cylindrical Pipe	Stainless Steel	16 inch	schedule 10	General Heat Transfer
23			23, 24	Cylindrical Pipe	Stainless Steel	16 inch	schedule 10	General Heat Transfer
24			24, 25	Cylindrical Pipe	Stainless Steel	16 inch	schedule 10	General Heat Transfer
25			25, 26	Cylindrical Pipe	Stainless Steel	16 inch	schedule 10	General Heat Transfer
26			26, 27	Cylindrical Pipe	Stainless Steel	16 inch	schedule 10	General Heat Transfer
27			27, 29	Cylindrical Pipe	Stainless Steel	16 inch	schedule 10	General Heat Transfer
28			29, 28	Cylindrical Pipe	Stainless Steel	16 inch	schedule 10	General Heat Transfer
29			28, 30	Cylindrical Pipe	Stainless Steel	16 inch	schedule 10	General Heat Transfer
30			30, 31	Cylindrical Pipe	Stainless Steel	16 inch	schedule 10	General Heat Transfer
31			31, 32	Cylindrical Pipe	Stainless Steel	16 inch	schedule 10	General Heat Transfer
32			32, 33	Cylindrical Pipe	Stainless Steel	16 inch	schedule 10	General Heat Transfer
33			33, 34	Cylindrical Pipe	Stainless Steel	20 inch	schedule 10	General Heat Transfer
35			34, 36	Cylindrical Pipe	Stainless Steel	24 inch	schedule 10	General Heat Transfer
36			36, 37	Cylindrical Pipe	Stainless Steel	24 inch	schedule 10	General Heat Transfer
37			37, 38	Cylindrical Pipe	Stainless Steel	24 inch	schedule 10	General Heat Transfer
38			38, 39	Cylindrical Pipe	Stainless Steel	24 inch	schedule 10	General Heat Transfer
39			39, 40	Cylindrical Pipe	Stainless Steel	18 inch	schedule 10	General Heat Transfer
40			40, 41	Cylindrical Pipe	Stainless Steel	20 inch	schedule 10	General Heat Transfer
41			41, 42	Cylindrical Pipe	Stainless Steel	20 inch	schedule 10	General Heat Transfer
42			42, 43	Cylindrical Pipe	Stainless Steel	20 inch	schedule 10	General Heat Transfer
43			43, 44	Cylindrical Pipe	Unspecified			General Heat Transfer
50			50, 51	Cylindrical Pipe	Stainless Steel	4 inch	schedule 40	General Heat Transfer
51			51, 52	Cylindrical Pipe	Stainless Steel	4 inch	schedule 40	General Heat Transfer
52			52, 53	Cylindrical Pipe	Stainless Steel	4 inch	schedule 40	General Heat Transfer
53			53, 54	Cylindrical Pipe	Stainless Steel	4 inch	schedule 40	General Heat Transfer
54			54, 55	Cylindrical Pipe	Stainless Steel	4 inch	schedule 40	General Heat Transfer
55			55, 64	Cylindrical Pipe	Stainless Steel	5 inch	schedule 40	General Heat Transfer
60			60, 61	Cylindrical Pipe	Stainless Steel	8 inch	schedule 10	General Heat Transfer
61			61, 62	Cylindrical Pipe	Stainless Steel	6 inch	schedule 40	General Heat Transfer
62			62, 63	Cylindrical Pipe	Stainless Steel	6 inch	schedule 40	General Heat Transfer
63			63, 64	Cylindrical Pipe	Stainless Steel	5 inch	schedule 40	General Heat Transfer
64			64, 65	Cylindrical Pipe	Stainless Steel	5 inch	schedule 40	General Heat Transfer
65			65, 66	Cylindrical Pipe	Stainless Steel	10 inch	schedule 10	General Heat Transfer
66			66, 67	Cylindrical Pipe	Stainless Steel	6 inch	schedule 40	General Heat Transfer

AFT Arrow 3.0 Input (4 of 12) 2/22/2006 08:33 AM
DMJMH+N

AFT Arrow Model Main OGTS Case 3 (115°F, Heat Transfer, Fan Curve @ 3550 RPM, Dirty Filters)

Pipe	Initial Flow	Initial Flow Units	Junctions (Up,Down)	Geometry	Material	Size	Type	Thermal Boundary
67			67, 68	Cylindrical Pipe	Stainless Steel	6 inch	schedule 40	General Heat Transfer
68			68, 69	Cylindrical Pipe	Stainless Steel	6 inch	schedule 40	General Heat Transfer
69			69, 70	Cylindrical Pipe	Stainless Steel	8 inch	schedule 10	General Heat Transfer
70			70, 16	Cylindrical Pipe	Stainless Steel	8 inch	schedule 10	General Heat Transfer
80			80, 81	Cylindrical Pipe	Stainless Steel	1-1/2 inch	schedule 40	General Heat Transfer
81			81, 82	Cylindrical Pipe	Stainless Steel	1-1/2 inch	schedule 40	General Heat Transfer
82			82, 83	Cylindrical Pipe	Stainless Steel	2 inch	schedule 40	General Heat Transfer
83			83, 84	Cylindrical Pipe	Stainless Steel	2 inch	schedule 40	General Heat Transfer
84			84, 94	Cylindrical Pipe	Stainless Steel	3 inch	schedule 40	General Heat Transfer
90			90, 91	Cylindrical Pipe	Stainless Steel	12 inch	schedule 10	General Heat Transfer
91			91, 92	Cylindrical Pipe	Stainless Steel	12 inch	schedule 10	General Heat Transfer
92			92, 93	Cylindrical Pipe	Stainless Steel	12 inch	schedule 10	General Heat Transfer
93			93, 94	Cylindrical Pipe	Stainless Steel	12 inch	schedule 10	General Heat Transfer
94			94, 16	Cylindrical Pipe	Stainless Steel	12 inch	schedule 10	General Heat Transfer
100			100, 101	Cylindrical Pipe	Stainless Steel	14 inch	schedule 10	General Heat Transfer
101			101, 102	Cylindrical Pipe	Stainless Steel	14 inch	schedule 10	General Heat Transfer
102			102, 103	Cylindrical Pipe	Stainless Steel	14 inch	schedule 10	General Heat Transfer
103			103, 33	Cylindrical Pipe	Stainless Steel	14 inch	schedule 10	General Heat Transfer
200			200, 201	Cylindrical Pipe	Stainless Steel	12 inch	schedule 10	General Heat Transfer
201			201, 202	Cylindrical Pipe	Stainless Steel	6 inch	schedule 40	General Heat Transfer
202			202, 203	Cylindrical Pipe	Stainless Steel	6 inch	schedule 40	General Heat Transfer
203			203, 204	Cylindrical Pipe	Stainless Steel	6 inch	schedule 40	General Heat Transfer
204			204, 21	Cylindrical Pipe	Stainless Steel	8 inch	schedule 10	General Heat Transfer
210			210, 211	Cylindrical Pipe	Stainless Steel	1-1/2 inch	schedule 40	General Heat Transfer
211			211, 212	Cylindrical Pipe	Stainless Steel	1-1/2 inch	schedule 40	General Heat Transfer
212			212, 213	Cylindrical Pipe	Stainless Steel	2 inch	schedule 40	General Heat Transfer
213			213, 214	Cylindrical Pipe	Stainless Steel	4 inch	schedule 40	General Heat Transfer
214			214, 215	Cylindrical Pipe	Stainless Steel	3 inch	schedule 40	General Heat Transfer
215			215, 204	Cylindrical Pipe	Stainless Steel	4 inch	schedule 40	General Heat Transfer
625			625, 25	Cylindrical Pipe	Stainless Steel	16 inch	schedule 10	General Heat Transfer
631			631, 31	Cylindrical Pipe	Stainless Steel	16 inch	schedule 10	General Heat Transfer
636			636, 36	Cylindrical Pipe	Stainless Steel	24 inch	schedule 10	General Heat Transfer
637			637, 93	Cylindrical Pipe	Stainless Steel	6 inch	schedule 40	General Heat Transfer
638			638, 203	Cylindrical Pipe	Stainless Steel	6 inch	schedule 40	General Heat Transfer

Pipe	Ambient Temp.	Ambient Temp. Units	Special Condition
1	115	deg. F	None
2	115	deg. F	None
3	115	deg. F	None
4	115	deg. F	None
5	115	deg. F	None
6	115	deg. F	None
7	115	deg. F	None
8	115	deg. F	None
9	115	deg. F	None
16	115	deg. F	None
17	115	deg. F	None
18	115	deg. F	None
19	115	deg. F	None
20	115	deg. F	None
21	115	deg. F	None
22	115	deg. F	None
23	115	deg. F	None
24	115	deg. F	None
25	115	deg. F	None

AFT Arrow 3.0 Input (5 of 12) 2/22/2006 08:33 AM
DMJMH+N

AFT Arrow Model Main OGTS Case 3 (115°F, Heat Transfer, Fan Curve @ 3550 RPM, Dirty Filters)

Pipe	Ambient Temp.	Ambient Temp. Units	Special Condition
26	115	deg. F	None
27	115	deg. F	None
28	115	deg. F	None
29	115	deg. F	None
30	115	deg. F	None
31	115	deg. F	None
32	115	deg. F	None
33	115	deg. F	None
35	115	deg. F	None
36	115	deg. F	None
37	115	deg. F	None
38	115	deg. F	None
39	115	deg. F	None
40	115	deg. F	None
41	115	deg. F	None
42	115	deg. F	None
43	115	deg. F	None
50	115	deg. F	None
51	115	deg. F	None
52	115	deg. F	None
53	115	deg. F	None
54	115	deg. F	None
55	115	deg. F	None
60	115	deg. F	None
61	115	deg. F	None
62	115	deg. F	None
63	115	deg. F	None
64	115	deg. F	None
65	115	deg. F	None
66	115	deg. F	None
67	115	deg. F	None
68	115	deg. F	None
69	115	deg. F	None
70	115	deg. F	None
80	115	deg. F	None
81	115	deg. F	None
82	115	deg. F	None
83	115	deg. F	None
84	115	deg. F	None
90	115	deg. F	None
91	115	deg. F	None
92	115	deg. F	None
93	115	deg. F	None
94	115	deg. F	None
100	115	deg. F	None
101	115	deg. F	None
102	115	deg. F	None
103	115	deg. F	None
200	115	deg. F	None
201	115	deg. F	None
202	115	deg. F	None
203	115	deg. F	None
204	115	deg. F	Closed
210	115	deg. F	None
211	115	deg. F	None

AFT Arrow 3.0 Input (6 of 12) 2/22/2006 08:33 AM
DMJMH+N

AFT Arrow Model Main OGTS Case 3 (115°F, Heat Transfer, Fan Curve @ 3550 RPM, Dirty Filters)

Pipe	Ambient Temp.	Ambient Temp. Units	Special Condition
212	115	deg. F	None
213	115	deg. F	None
214	115	deg. F	None
215	115	deg. F	None
625	115	deg. F	None
631	115	deg. F	None
636	115	deg. F	None
637	115	deg. F	None
638	115	deg. F	Closed

Pipe Loss Table

Pipe Losses	K Total	Standard Bends	Mitre Bends	Smooth Bends	Angle Valves	Ball Valves	Butterfly Valves	Cylinder Valves	Gate Valves	Globe Valves	Plug Valves	Poppet Valves
64	0.04											
65	1.51											
66	0.37											
67	0.46			2 (0.42)								

Pipe Losses	Three-way Valves	Swing Check Valves	Lift Check Valves	Tilting Disc Check Valves	Stop Check Valves	Sharp-edged Orifice	Long Orifice	Contractions	Expansions
64									1 (0.0)
65									1 (1.51)
66								1 (0.13)	
67									

Pipe Losses	Entrances	Exits	Differential Flowmeter	Honeycomb	Screen	Tee	Add'l Loss
64						1 (0.04)	
65							
66							(0.24)
67						1 (0.04)	

Area Change Table

Area Change	Name	Object Defined	Elevation	Elevation Units	Initial Pressure	Initial Pressure Units	Database Source	Type	Geometry
3	Area Change	Yes	0	feet				Conical	Contraction
4	Area Change	Yes	0	feet				Conical	Expansion
5	Area Change	Yes	0	feet				Conical	Contraction
7	Area Change	Yes	0	feet				Conical	Contraction
39	Area Change	Yes	0	feet				Conical	Contraction
63	Area Change	Yes	0	feet				Conical	Contraction
82	Area Change	Yes	0	feet				Conical	Expansion
84	Area Change	Yes	0	feet				Conical	Expansion
212	Area Change	Yes	0	feet				Conical	Expansion
214	Area Change	Yes	0	feet				Conical	Contraction
215	Area Change	Yes	0	feet				Conical	Expansion

Area Change	Angle	Loss Factor
3	22.	0.439751
4	22.	0.1552215
5	22.	0.439751
7	11.	4.917351E-02
39	17.	0.1635637
63	11.	4.917351E-02
82	9.	3.155545E-02

AFT Arrow 3.0 Input (7 of 12) 2/22/2006 08:33 AM
DMJMH+N

AFT Arrow Model Main OGTS Case 3 (115°F, Heat Transfer, Fan Curve @ 3550 RPM, Dirty Filters)

Area Change	Angle	Loss Factor
84	18.	0.1212923
212	9.	3.155545E-02
214	18.	0.1555985
215	14.	5.570398E-02

Assigned Flow Table

Assigned Flow	Name	Object Defined	Elevation	Elevation Units	Initial Pressure	Initial Pressure Units	Database Source	Special Condition
637	Waste Feed Blower	Yes	0	feet				None
638	Assigned Flow Vac Pump	Yes	0	feet				None

Assigned Flow	Type	Flow	Flow Units	Loss Factor
637	Inflow	2682	lbm/hr	0
638	Inflow	42	lbm/hr	0

Assigned Pressure Table

Assigned Pressure	Name	Object Defined	Elevation	Elevation Units	Initial Pressure	Initial Pressure Units	Database Source	Pressure
1	Assigned Pressure	Yes	0	feet	14.30	psia		14.3
44	Assigned Pressure	Yes	0	feet	14.30	psia		14.3
50	Assigned Pressure	Yes	0	feet	14.30	psia		14.3
60	Assigned Pressure	Yes	0	feet	14.30	psia		14.3
80	Assigned Pressure	Yes	0	feet	14.30	psia		14.3
90	Assigned Pressure	Yes	0	feet	14.30	psia		14.3
100	Assigned Pressure	Yes	0	feet	14.30	psia		14.3
200	Assigned Pressure	Yes	0	feet	14.30	psia		14.3
210	Assigned Pressure	Yes	0	feet	14.30	psia		14.3

Assigned Pressure	Pressure Units	Pressure Type	Temperature	Temperature Units	Balance Energy	Balance Concentration	K Factor	(Pipe #1) K In, K Out
1	psia	Stagnation	115	deg. F	No	No	0	(P1) 0, 0
44	psia	Stagnation	115	deg. F	No	No	0	(P43) 0, 0
50	psia	Stagnation	115	deg. F	No	No	0	(P50) 0, 0
60	psia	Stagnation	115	deg. F	No	No	0	(P60) 0, 0
80	psia	Stagnation	115	deg. F	No	No	0	(P80) 0, 0
90	psia	Stagnation	115	deg. F	No	No	0	(P90) 0, 0
100	psia	Stagnation	115	deg. F	No	No	0	(P100) 0, 0
200	psia	Stagnation	115	deg. F	No	No	0	(P200) 0, 0
210	psia	Stagnation	115	deg. F	No	No	0	(P210) 0, 0

Assigned Pressure	(Pipe #2) K In, K Out	(Pipe #3) K In, K Out	(Pipe #4) K In, K Out	(Pipe #5) K In, K Out	(Pipe #6) K In, K Out	(Pipe #7) K In, K Out	(Pipe #8) K In, K Out	(Pipe #9) K In, K Out
1								
44								
50								
60								
80								
90								
100								
200								
210								

Assigned Pressure	(Pipe #10) K In, K Out	(Pipe #11) K In, K Out	(Pipe #12) K In, K Out	(Pipe #13) K In, K Out	(Pipe #14) K In, K Out	(Pipe #15) K In, K Out	(Pipe #16) K In, K Out	(Pipe #17) K In, K Out
1								

AFT Arrow 3.0 Input (8 of 12) 2/22/2006 08:33 AM
DMJMH+N

AFT Arrow Model Main OGTS Case 3 (115°F, Heat Transfer, Fan Curve @ 3550 RPM, Dirty Filters)

Assigned Pressure	(Pipe #10) K In, K Out	(Pipe #11) K In, K Out	(Pipe #12) K In, K Out	(Pipe #13) K In, K Out	(Pipe #14) K In, K Out	(Pipe #15) K In, K Out	(Pipe #16) K In, K Out	(Pipe #17) K In, K Out
44								
50								
60								
80								
90								
100								
200								
210								

Assigned Pressure	(Pipe #18) K In, K Out	(Pipe #19) K In, K Out	(Pipe #20) K In, K Out	(Pipe #21) K In, K Out	(Pipe #22) K In, K Out	(Pipe #23) K In, K Out	(Pipe #24) K In, K Out	(Pipe #25) K In, K Out
1								
44								
50								
60								
80								
90								
100								
200								
210								

Branch Table

Branch	Name	Object Defined	Elevation	Elevation Units	Initial Pressure	Initial Pressure Units	Database Source	Special Condition	Boundary Flow (+ = in/- = out)
43	Branch	Yes	0	feet				None	

Branch	Boundary Flow Units	(Pipe #1) K In, K Out	(Pipe #2) K In, K Out	(Pipe #3) K In, K Out	(Pipe #4) K In, K Out	(Pipe #5) K In, K Out	(Pipe #6) K In, K Out	(Pipe #7) K In, K Out	(Pipe #8) K In, K Out
43		(P42) 0, 1	(P43) 0, 0						

Branch	(Pipe #9) K In, K Out	(Pipe #10) K In, K Out	(Pipe #11) K In, K Out	(Pipe #12) K In, K Out	(Pipe #13) K In, K Out	(Pipe #14) K In, K Out	(Pipe #15) K In, K Out	(Pipe #16) K In, K Out	(Pipe #17) K In, K Out
43									

Branch	(Pipe #18) K In, K Out	(Pipe #19) K In, K Out	(Pipe #20) K In, K Out	(Pipe #21) K In, K Out	(Pipe #22) K In, K Out	(Pipe #23) K In, K Out	(Pipe #24) K In, K Out	(Pipe #25) K In, K Out
43								

Compressor/Fan Table

Compressor/Fan	Name	Object Defined	Elevation	Elevation Units	Initial Pressure	Initial Pressure Units	Database Source	Special Condition
40	Fan N31-025	Yes	0	feet				None

Compressor/Fan	Pump Type	Design Flow Rate	Design Flow Rate Units	Current Configuration	Independent Variable	Ind. Variable Units	Dependent Variable
40	Comp./Fan Curve				Vol. Flow Rate	ft3/min	Pressure Loss

Compressor/Fan	Dep. Variable Units	Comp./Fan Curve Constant a	Comp./Fan Curve Constant b	Comp./Fan Curve Constant c	Comp./Fan Curve Constant d	Comp./Fan Curve Constant e
40	in. H2O std.	114.7023	4.038226E-03	-3.200603E-07	0	0

Compressor/Fan	Runout Flow Rate	Runout Flow Rate Units	Added Press. Type	Speed	Control Discharge	Control Discharge Units	Control When Exceeded Only	Compression Process
40			Stagnation	100				Adiabatic

Control Valve Table

AFT Arrow 3.0 Input (9 of 12) 2/22/2006 08:33 AM
DMJMH+N

AFT Arrow Model Main OGTS Case 3 (115°F, Heat Transfer, Fan Curve @ 3550 RPM, Dirty Filters)

Control Valve	Name	Object Defined	Elevation	Elevation Units	Initial Pressure	Initial Pressure Units	Database Source	Special Condition	Valve Type	Control Setting
92	FV-016	Yes	0	feet				None	FCV	8320
102	HV-504	Yes	0	feet				None	FCV	10723

Control Valve	Control Units	Pressure/ Head Type	Close Type	Full Open Loss Type	Full Open Loss	Full Open Xt
92	lbm/hr	N/A	Fail Open	None		
102	lbm/hr	N/A	Open (Close on Reverse Flow)	Cv	8300	Cv

Dead End Table

Dead End	Name	Object Defined	Elevation	Elevation Units	Initial Pressure	Initial Pressure Units	Database Source
625	Dead End	Yes	0	feet			
631	Dead End	Yes	0	feet			
636	Dead End	Yes	0	feet			

General Component Table

General Component	Name	Object Defined	Elevation	Elevation Units	Initial Pressure	Initial Pressure Units	Database Source
2	ICV Filter N02-010	Yes	0	feet			
19	Packed Tower	Yes	0	feet			
20	Venturi/Demister	Yes	0	feet			
22	Condenser Demister	Yes	0	feet			
27	HEPA	Yes	0	feet			
29	HEGA	Yes	0	feet			
51	AWTE Filter N22-026	Yes	0	feet			
53	AWTE	Yes	0	feet			
61	SMF Dilution Filter N02-049	Yes	0	feet			
66	SMF N02-019	Yes	0	feet			
69	SMF N02-020	Yes	0	feet			
81	WRS Tank Filter	Yes	0	feet			
91	WSS Filter N02-101/102	Yes	0	feet			
101	SCR Filter N02-022	Yes	0	feet			
201	WSS Filter N02-093	Yes	0	feet			
211	SWS Tank Filter N02-014A	Yes	0	feet			

General Component	Special Condition	Loss Model	Loss Value	Independent Variable	Ind. Variable Units	Dependent Variable	Dep. Variable Units
2	None	General Polynomial	Variable	Vol. Flow Rate	ft3/min	Pressure Loss	in. H2O std.
19	None	General Polynomial	Variable	Vol. Flow Rate	ft3/min	Pressure Loss	in. H2O std.
20	None	General Polynomial	Variable	Vol. Flow Rate	ft3/min	Pressure Loss	in. H2O std.
22	None	General Polynomial	Variable	Vol. Flow Rate	ft3/min	Pressure Loss	in. H2O std.
27	None	General Polynomial	Variable	Vol. Flow Rate	ft3/min	Pressure Loss	in. H2O std.
29	None	General Polynomial	Variable	Vol. Flow Rate	ft3/min	Pressure Loss	in. H2O std.
51	None	General Polynomial	Variable	Vol. Flow Rate	ft3/min	Pressure Loss	in. H2O std.
53	None	K Constant	1.5				
61	None	General Polynomial	Variable	Vol. Flow Rate	ft3/min	Pressure Loss	in. H2O std.
66	None	General Polynomial	Variable	Vol. Flow Rate	ft3/min	Pressure Loss	in. H2O std.
69	None	General Polynomial	Variable	Vol. Flow Rate	ft3/min	Pressure Loss	in. H2O std.
81	None	General Polynomial	Variable	Vol. Flow Rate	ft3/min	Pressure Loss	in. H2O std.
91	None	General Polynomial	Variable	Vol. Flow Rate	ft3/min	Pressure Loss	in. H2O std.
101	None	General Polynomial	Variable	Vol. Flow Rate	ft3/min	Pressure Loss	in. H2O std.
201	None	General Polynomial	Variable	Vol. Flow Rate	ft3/min	Pressure Loss	in. H2O std.
211	None	General Polynomial	Variable	Vol. Flow Rate	ft3/min	Pressure Loss	in. H2O std.

AFT Arrow 3.0 Input (10 of 12) 2/22/2006 08:33 AM
DMJMH+N

AFT Arrow Model Main OGTS Case 3 (115°F, Heat Transfer, Fan Curve @ 3550 RPM, Dirty Filters)

General Component	Loss Constant a	Loss Constant b	Loss Constant c	Loss Constant d	Loss Constant e
2	-2.331035E-17	0.00448	0	0	0
19	-1.168011E-15	3.346839E-18	3.901916E-07	0	0
20	-1.340247E-14	2.646809E-17	3.506383E-06	0	0
22	2.862294E-17	2.179133E-03	0	0	0
27	-6.201636E-17	1.458553E-03	0	0	0
29	-3.75134E-17	8.729822E-04	0	0	0
51	-2.959872E-17	0.01136	0	0	0
53					
61	-1.165517E-17	0.00112	0	0	0
66	-6.657001E-17	0.0064	0	0	0
69	-6.657001E-17	0.0064	0	0	0
81	-3.610393E-17	0.0325	0	0	0
91	-2.331035E-17	0.00224	0	0	0
101	-1.458252E-17	0.00035	0	0	0
201	-1.165517E-17	0.0056	0	0	0
211	-3.610393E-17	0.0325	0	0	0

Heat Exchanger Table

Heat Exchanger	Name	Object Defined	Elevation	Elevation Units	Initial Pressure	Initial Pressure Units	Database Source	Special Condition	Type
6	ICV	Yes	0	feet				None	
23	WSS Heater	Yes	0	feet				None	
34	SCR	Yes	0	feet				None	

Heat Exchanger	Loss Model	Loss Value	Independent Variable	Ind. Variable Units	Dependent Variable	Dep. Variable Units	Loss Constant a
6	K Constant	1.5					
23	General Polynomial	Variable	Vol. Flow Rate	ft3/min	Pressure Loss	in. H2O std.	-2.633527E-16
34	General Polynomial	Variable	Vol. Flow Rate	ft3/min	Pressure Loss	in. H2O std.	-1.041701E-15

Heat Exchanger	Loss Constant b	Loss Constant c	Loss Constant d	Loss Constant e
6				
23	5.437952E-19	1.75338E-07	0	0
34	2.600104E-03	0	0	0

Tee or Wye Table

Tee or Wye	Name	Object Defined	Elevation	Elevation Units	Initial Pressure	Initial Pressure Units	Database Source	Tee/Wye Type	Loss Type
16	Tee or Wye	Yes	0	feet				Round Straight	Detailed
21	Tee or Wye	Yes	0	feet				Round Straight	Detailed
25	Tee or Wye	Yes	0	feet				Round Straight	Detailed
31	Tee or Wye	Yes	0	feet				Round Straight	Detailed
33	Tee or Wye	Yes	0	feet				Round Straight	Detailed
36	Tee or Wye	Yes	0	feet				Round Straight	Detailed
55	Tee or Wye	Yes	0	feet				Round Straight	Detailed
64	Tee or Wye	Yes	0	feet				Round Straight	Detailed
93	Tee or Wye	Yes	0	feet				Round Straight	Detailed
94	Tee or Wye	Yes	0	feet				Round Straight	Detailed
203	Tee or Wye	Yes	0	feet				Round Straight	Detailed
204	Tee or Wye	Yes	0	feet				Round Straight	Detailed

Tee or Wye	Angle	Pipes A, B, C
16	30	
21	90	

AFT Arrow 3.0 Input (11 of 12) 2/22/2006 08:33 AM
DMJMH+N

AFT Arrow Model Main OGTS Case 3 (115°F, Heat Transfer, Fan Curve @ 3550 RPM, Dirty Filters)

Tee or Wye	Angle	Pipes A, B, C
25	135	
31	45	
33	45	
36	145	
55	45	
64	45	
93	30	
94	30	
203	45	
204	45	

Valve Table

Valve	Name	Object Defined	Elevation	Elevation Units	Initial Pressure	Initial Pressure Units	Database Source	Special Condition	Exit Valve
8	HV-114	Yes	0	feet				None	No
9	HV-115	Yes	0	feet				None	No
17	36-V-049	Yes	0	feet				None	No
18	HV-125	Yes	0	feet				None	No
24	WSS Valve V-072	Yes	0	feet				None	No
26	HV-313	Yes	0	feet				None	No
28	HV-314a	Yes	0	feet				None	No
30	HV-314b	Yes	0	feet				None	No
32	36-V-017	Yes	0	feet				None	No
37	HV-525	Yes	0	feet				None	No
38	36-V-024	Yes	0	feet				None	No
41	36-V-080	Yes	0	feet				None	No
42	HV-526	Yes	0	feet				None	No
52	HV-111	Yes	0	feet				None	No
54	HV-113	Yes	0	feet				None	No
62	TV-014	Yes	0	feet				Closed	No
65	HV-002	Yes	0	feet				None	No
67	HV-003	Yes	0	feet				None	No
68	HV-004	Yes	0	feet				None	No
70	HV-005	Yes	0	feet				None	No
83	32-V-003	Yes	0	feet			Ball PO=100 (C)	Closed	No
103	36-V-019	Yes	0	feet				None	No
202	FV-331	Yes	0	feet				Closed	No
213	37-V-004	Yes	0	feet			Ball PO=100 (C)	Closed	No

Valve	Exit Pressure	Exit Pressure Units	CdA	CdA Units	Loss Model	Loss Value	Independent Variable	Ind. Variable Units	Dependent Variable	Dep. Variable Units
8					Cv Constant	1194				
9					Cv Constant	1194				
17					Cv Constant	10040				
18					Cv Constant	10040				
24					Cv Constant	10040				
26					Cv Constant	10040				
28					K Constant	0.19				
30					K Constant	0.19				
32					Cv Constant	10040				
37					Cv Constant	21660				
38					Cv Constant	21660				
41					Cv Constant	15430				
42					Cv Constant	15430				
52					Cv Constant	425				

AFT Arrow 3.0 Input (12 of 12) 2/22/2006 08:33 AM
DMJMH+N

AFT Arrow Model Main OGTS Case 3 (115°F, Heat Transfer, Fan Curve @ 3550 RPM, Dirty Filters)

Valve	Exit Pressure	Exit Pressure Units	CdA	CdA Units	Loss Model	Loss Value	Independent Variable	Ind. Variable Units	Dependent Variable	Dep. Variable Units
54					Cv Constant	425				
62					Cv Constant	80				
65					Cv Constant	1194				
67					Cv Constant	1194				
68					Cv Constant	1194				
70					Cv Constant	1194				
83					K Constant	0.056598				
103					Cv Constant	8300				
202					Cv Constant	35				
213					K Constant	0.056598				

Valve	Loss Constant a	Loss Constant b	Loss Constant c	Loss Constant d	Loss Constant e
8					
9					
17					
18					
24					
26					
28					
30					
32					
37					
38					
41					
42					
52					
54					
62					
65					
67					
68					
70					
83					
103					
202					
213					

Title: AFT Arrow Model Main OGTS Case 3 (115°F, Heat Transfer, Fan Curve @ 3550 RPM, Dirty Filters)
Analysis run on: 2/22/2006 8:39:32 AM
Application version: AFT Arrow Version 3.0 (2005.09.14)
Input File: C:\AFT Products\AFT Arrow\DBVS-OGTS-R2.aro

Execution Time= 26.03 seconds
Total Number Of Pressure Iterations= 1124
Total Number Of Flow Iterations= 143
Total Number Of Enthalpy Iterations= 143
Number Of Pipes= 83
Number Of Junctions= 84
Matrix Method= Gaussian Elimination

Length March Solution Method with Mach Number Limits
Segments Per Pipe= 2
Mach Number Increment= 0.01
Pressure Tolerance= 0.0001 relative change
Mass Flow Rate Tolerance= 0.0001 relative change
Enthalpy Tolerance= 0.0001 relative change
Flow Relaxation= (Automatic)
Pressure Relaxation= (Automatic)
Resistance Relaxation= (Automatic)

Fluid Database: AFT Standard
Fluid: Air
Max Fluid Temperature Data= 1000 deg. K
Min Fluid Temperature Data= 200 deg. K
Molecular Weight =28.97 amu
Gas Constant =0.06855 Btu/lbm-R
Critical Pressure =37.25 atm
Critical Temperature =132.41 deg. K
Acentric Factor =0.021
Equation of State= Redlich-Kwong
Enthalpy Model= Generalized
Specific Heat Ratio Accuracy = High
Atmospheric Pressure= 14.3 psia
Gravitational Acceleration= 1 g
Standard Pressure= 14.696 psia
Standard Temperature= 60 deg. F
Turbulent Flow Above Reynolds Number= 4000
Laminar Flow Below Reynolds Number= 2300
Total Inflow= 6.579 lbm/sec
Total Outflow= 6.579 lbm/sec
Total Energy Inflow= 1,833 Btu/s
Total Energy Outflow= 1,679 Btu/s
Total Heat Transferred Into System= -153.7 Btu/s
Maximum Pressure is 15.09 psia at Junction 213 Outlet
Minimum Pressure is 9.932 psia at Junction 40 Inlet
Maximum Static Temperature is 875.0 deg. F at Junction 6 Outlet
Minimum Static Temperature is 70.00 deg. F at Junction 204 Inlet

Compressor/Fan Summary

Jct	Name	Mass Flow (lbm/hr)	Vol. Flow (ft3/min)	DP Stag. (in. H2O std.)	DP Static (in. H2O std.)	Overall Efficiency (Percent)	Speed (Percent)	Overall Power (hp)	Comp. Ratio (Percent)	BEP Q (ft3/sec)
40	Fan N31-025	23,686	10,563	121.6	122.1	67.00	100.0	262.4	144.0	N/A

Jct	BEP Mass (lbm/sec)	% of BEP (Percent)
40	N/A	N/A

Valve Summary

AFT Arrow 3.0 Output (2 of 13) 2/22/2006
DMJMH+N

AFT Arrow Model Main OGTS Case 3 (115°F, Heat Transfer, Fan Curve @ 3550 RPM, Dirty Filters)

Jct	Name	Valve Type	Mass Flow (lbm/sec)	DP Stag (psid)	DP Static (psid)	P Static Inlet (psia)	K	Valve State	Cv
8	HV-114	REGULAR	0.3195	0.016220	0.007102	14.104	0.9263	Open	1,194.00
9	HV-115	REGULAR	0.3195	0.007172	0.007177	14.097	0.8573	Open	1,194.00
17	36-V-049	REGULAR	3.6008	0.008057	0.008065	13.526	0.6008	Open	10,040.00
18	HV-125	REGULAR	3.6008	0.007880	0.007888	13.518	0.5938	Open	10,040.00
24	WSS Valve V-072	REGULAR	3.6008	0.009687	0.009701	11.213	0.5879	Open	10,040.00
26	HV-313	REGULAR	3.6008	0.009552	0.009566	11.195	0.5834	Open	10,040.00
28	HV-314a	REGULAR	3.6008	0.003217	0.003223	10.800	0.1900	Open	N/A
30	HV-314b	REGULAR	3.6008	0.003218	0.003223	10.797	0.1900	Open	N/A
32	36-V-017	REGULAR	3.6008	0.009765	0.009780	10.790	0.5799	Open	10,040.00
37	HV-525	REGULAR	6.5794	0.008990	0.009003	9.987	0.6438	Open	21,660.00
38	36-V-024	REGULAR	6.5794	0.008931	0.008943	9.978	0.6414	Open	21,660.00
41	36-V-080	REGULAR	6.5794	0.014159	0.014181	14.329	0.6086	Open	15,430.00
42	HV-526	REGULAR	6.5794	0.014073	0.014095	14.315	0.6065	Open	15,430.00
52	HV-111	REGULAR	0.2251	0.013738	0.013748	14.157	1.3069	Open	425.00
54	HV-113	REGULAR	0.2251	0.013772	0.013783	14.114	1.3065	Open	425.00
X62	TV-014	REGULAR	0.0000	N/A	N/A	14.300	N/A	Closed By User	80.00
65	HV-002	REGULAR	0.5447	0.053330	0.016145	14.029	1.3545	Open	1,194.00
67	HV-003	REGULAR	0.5447	0.015763	0.015784	13.800	0.8608	Open	1,194.00
68	HV-004	REGULAR	0.5447	0.015633	0.015640	13.774	0.8592	Open	1,194.00
70	HV-005	REGULAR	0.5447	0.023920	0.023929	13.585	4.6852	Open	1,194.00
X83	32-V-003	REGULAR	0.0000	N/A	N/A	14.300	N/A	Closed By User	N/A
92	FV-016	FCV	2.3111	0.526172	0.526656	14.066	42.3057	Open	N/A
102	HV-504	FCV	2.9786	3.402366	3.406774	14.217	243.3571	Open	8,300.00
103	36-V-019	REGULAR	2.9786	0.008930	0.008945	10.810	0.4924	Open	8,300.00
X202	FV-331	REGULAR	0.0000	N/A	N/A	14.300	N/A	Closed By User	35.00
X213	37-V-004	REGULAR	0.0000	N/A	N/A	14.300	N/A	Closed By User	N/A

Jct	Cv Est.
8	N/A
9	N/A
17	N/A
18	N/A
24	N/A
26	N/A
28	16,712.2
30	16,712.2
32	N/A
37	N/A
38	N/A
41	N/A
42	N/A
52	N/A
54	N/A
X62	N/A
65	N/A
67	N/A
68	N/A
70	N/A
X83	N/A
92	723.6
102	N/A
103	N/A
X202	N/A

AFT Arrow 3.0 Output (3 of 13) 2/22/2006
DMJMH+N

AFT Arrow Model Main OGTS Case 3 (115°F, Heat Transfer, Fan Curve @ 3550 RPM, Dirty Filters)

Jct	Cv Est.
X213	N/A

Heat Exchanger Summary

Jct	Name	Mass Flow (lbm/sec)	DPo (psid)	DP (psid)	DT Loss (deg. F)	T Inlet (deg. F)	T Outlet (deg. F)	Heat Rate In (Btu/s)
6	ICV	0.3195	0.03180	0.02017	-759.99	114.8	874.7	59.99
23	WSS Heater	3.6008	0.11414	0.11495	-24.98	141.8	166.8	21.99
34	SCR	6.5794	0.76741	0.75916	-130.06	141.6	271.6	209.26

Pipe Output Table

Pipe	Name	Mass Flow (lbm/hr)	Vel. In (feet/sec)	Vel. Out (feet/sec)	Mach # In	Mach # Out	dP Stag. Total (in. H2O std.)	P Stag. In (in. H2O std. (g))	P Stag. Out (in. H2O std. (g))
1	Pipe	1,150.3	23.71	23.73	0.020245	0.020263	0.355586	0.00000	-0.355586
2	Pipe	1,150.3	23.80	23.81	0.020329	0.020335	0.121274	-1.63519	-1.756466
3	Pipe	1,150.3	54.09	54.32	0.046202	0.046392	1.609771	-1.80631	-3.416077
4	Pipe	1,150.3	23.92	23.92	0.020426	0.020428	0.051794	-3.50710	-3.558892
5	Pipe	1,150.3	54.34	54.35	0.046415	0.046422	0.065046	-3.60894	-3.673989
6	Pipe	1,150.3	55.75	53.18	0.031380	0.030639	0.081069	-4.55424	-4.635311
7	Pipe	1,150.3	76.83	70.58	0.044274	0.042418	0.279110	-4.64774	-4.926854
8	Pipe	1,150.3	48.91	48.74	0.029391	0.029340	0.020802	-5.37584	-5.396639
9	Pipe	1,150.3	48.76	47.68	0.029355	0.029026	0.083683	-5.59515	-5.678837
16	Pipe	12,962.8	44.61	44.59	0.037200	0.037200	0.195612	-20.86374	-21.059353
17	Pipe	12,962.8	44.61	44.61	0.037222	0.037220	0.010163	-21.28239	-21.292557
18	Pipe	12,962.8	44.63	44.63	0.037242	0.037244	0.048811	-21.51069	-21.559496
19	Pipe	12,962.8	45.23	45.24	0.037745	0.037751	0.066032	-26.51977	-26.605803
20	Pipe	12,962.8	51.65	51.65	0.043105	0.043110	0.059423	-72.39568	-72.455101
21	Pipe	12,962.8	51.65	51.65	0.043110	0.043114	0.054381	-72.45510	-72.509476
22	Pipe	12,962.8	53.13	53.14	0.044350	0.044356	0.056809	-81.50134	-81.558144
23	Pipe	12,962.8	55.91	55.94	0.045739	0.045772	0.277420	-84.71747	-84.994888
24	Pipe	12,962.8	55.99	55.99	0.045811	0.045810	0.002297	-85.26302	-85.265312
25	Pipe	12,962.8	56.02	56.02	0.045832	0.045839	0.076766	-85.40993	-85.486687
26	Pipe	12,962.8	56.07	56.06	0.045878	0.045880	0.063726	-85.75110	-85.814819
27	Pipe	12,962.8	57.27	57.26	0.046870	0.046870	0.071962	-92.34686	-92.418816
28	Pipe	12,962.8	58.02	58.02	0.047497	0.047496	0.002825	-96.41185	-96.414680
29	Pipe	12,962.8	58.04	58.03	0.047510	0.047509	0.002825	-96.50375	-96.506569
30	Pipe	12,962.8	58.05	58.04	0.047523	0.047519	0.011351	-96.59666	-96.607018
31	Pipe	12,962.8	58.04	57.95	0.047519	0.047490	0.082046	-96.60702	-96.689064
32	Pipe	12,962.8	58.01	58.02	0.047533	0.047546	0.087326	-96.95936	-97.046684
33	Pipe	23,685.8	65.19	65.23	0.054414	0.054456	0.307435	-97.06094	-97.368370
35	Pipe	23,685.8	59.17	58.29	0.044824	0.044514	0.377998	-118.61072	-118.988716
36	Pipe	23,685.8	58.29	58.26	0.044514	0.044504	0.004778	-118.98872	-118.993492
37	Pipe	23,685.8	58.31	58.29	0.044544	0.044536	0.003960	-119.24238	-119.246338
38	24" Sch 10	23,685.8	58.34	58.29	0.044576	0.044558	0.008289	-119.49353	-119.501823
39	EJ-604	23,685.8	103.89	103.92	0.079446	0.079475	0.139964	-119.56404	-119.704002
40	EJ-605	23,685.8	67.79	67.77	0.048151	0.048168	0.408409	1.85826	1.449850
41	EJ-605	23,685.8	67.84	67.82	0.048216	0.048209	0.004567	1.05794	1.053373
42	EJ-605	23,685.8	67.88	67.86	0.048256	0.048249	0.004567	0.66384	0.659272
43	Stack	23,685.8	11.28	10.52	0.008017	0.007739	0.024788	0.02035	-0.004435
50	Pipe	810.5	37.92	38.03	0.032385	0.032476	1.114406	0.00000	-1.114406
51	Pipe	810.5	38.25	38.27	0.032666	0.032687	0.256169	-3.40578	-3.661951
52	Pipe	810.5	38.31	38.33	0.032719	0.032733	0.166204	-4.04225	-4.208449

AFT Arrow 3.0 Output (4 of 13) 2/22/2006
DMJMH+N

AFT Arrow Model Main OGTS Case 3 (115°F, Heat Transfer, Fan Curve @ 3550 RPM, Dirty Filters)

Pipe	Name	Mass Flow (lbm/hr)	Vel. In (feet/sec)	Vel. Out (feet/sec)	Mach # In	Mach # Out	dP Stag. Total (in. H2O std.)	P Stag. In (in. H2O std. (g))	P Stag. Out (in. H2O std. (g))
53	Pipe	810.5	38.37	38.39	0.032770	0.032788	0.223040	-4.64584	-4.868883
54	Pipe	810.5	38.43	38.49	0.032820	0.032867	0.556530	-5.25010	-5.806632
55	Pipe	1,960.8	93.66	93.44	0.063807	0.063744	0.148279	-5.78261	-5.930888
60	Pipe	0.0	0.00	0.00	0.000000	0.000000	0.000000	0.00000	0.000000
61	Pipe	0.0	0.00	0.00	0.000000	0.000000	0.000000	0.00000	0.000000
62	Pipe	0.0	0.00	0.00	0.000000	0.000000	0.000000	-4.30494	-4.304935
63	Pipe	0.0	0.00	0.00	0.000000	0.000000	0.000000	-4.30494	-4.304935
64	Pipe	1,960.8	93.52	92.92	0.063798	0.063601	0.140862	-6.25926	-6.400119
65	Pipe	1,960.8	21.84	21.73	0.014944	0.014907	0.092711	-7.87631	-7.969025
66	Pipe	1,960.8	65.02	62.36	0.044615	0.043706	0.431428	-12.91008	-13.341509
67	Pipe	1,960.8	62.43	62.07	0.043756	0.043644	0.269157	-13.77782	-14.046978
68	Pipe	1,960.8	62.14	61.54	0.043694	0.043499	0.384307	-14.47970	-14.864007
69	Pipe	1,960.8	33.02	32.89	0.023337	0.023293	0.036007	-19.60496	-19.640970
70	8" Sch 10	1,960.8	32.95	29.94	0.023334	0.022245	0.475012	-20.30309	-20.778107
80	Pipe	0.0	0.00	0.00	0.000000	0.000000	0.000000	0.00000	0.000000
81	Pipe	0.0	0.00	0.00	0.000000	0.000000	0.000000	0.00000	0.000000
82	Pipe	0.0	0.00	0.00	0.000000	0.000000	0.000000	0.00000	0.000000
83	Pipe	0.0	0.00	0.00	0.000000	0.000000	0.000000	-17.02165	-17.021648
84	3" Sch 40	0.0	0.00	0.00	0.000000	0.000000	0.000000	-17.02165	-17.021648
90	Pipe	8,320.0	41.10	41.21	0.035104	0.035192	0.989621	0.00000	-0.989621
91	Pipe	8,320.0	41.70	41.75	0.035611	0.035658	0.511494	-5.62667	-6.138168
92	12" Sch 10	8,320.0	43.37	43.42	0.037044	0.037084	0.405135	-20.70298	-21.108112
93	Pipe	11,002.0	57.42	57.42	0.049043	0.049044	0.004804	-20.88887	-20.893679
94	Pipe	11,002.0	57.42	57.43	0.049044	0.049046	0.018452	-20.89368	-20.912130
100	Pipe	10,723.0	43.82	43.90	0.037422	0.037497	0.783080	0.00000	-0.783080
101	Pipe	10,723.0	44.01	44.03	0.037586	0.037605	0.202000	-1.71647	-1.918473
102	Pipe	10,723.0	57.89	57.89	0.049448	0.049449	0.004778	-96.09824	-96.103020
103	14" Sch 10	10,723.0	57.94	57.98	0.049490	0.049520	0.183627	-96.35021	-96.533844
200	Pipe	0.0	0.00	0.00	0.000000	0.000000	0.000000	0.00000	0.000000
201	Pipe	0.0	0.00	0.00	0.000000	0.000000	0.000000	0.00000	0.000000
202	Pipe	0.0	0.00	0.00	0.000000	0.000000	No Solution	No Solution	No Solution
203	Pipe	0.0	0.00	0.00	0.000000	0.000000	0.000000	19.79171	19.791706
X204	Pipe	0.0	0.00	0.00	0.000000	0.000000	53.059288	-19.39581	-72.455101
210	Pipe	0.0	0.00	0.00	0.000000	0.000000	0.000000	0.00000	0.000000
211	Pipe	0.0	0.00	0.00	0.000000	0.000000	0.000000	0.00000	0.000000
212	Pipe	0.0	0.00	0.00	0.000000	0.000000	0.000000	0.00000	0.000000
213	Pipe	0.0	0.00	0.00	0.000000	0.000000	No Solution	No Solution	No Solution
214	Pipe	0.0	0.00	0.00	0.000000	0.000000	No Solution	No Solution	No Solution
215	Pipe	0.0	0.00	0.00	0.000000	0.000000	No Solution	No Solution	No Solution
625	Pipe	0.0	0.00	0.00	0.000000	0.000000	0.000000	-81.70904	-81.709038
631	Pipe	0.0	0.00	0.00	0.000000	0.000000	0.000000	-93.04556	-93.045563
636	Pipe	0.0	0.00	0.00	0.000000	0.000000	0.000000	-115.38627	-115.386269
637	Pipe	2,682.0	58.34	58.34	0.049818	0.049821	0.023600	-20.22915	-20.252752
X638	Pipe	0.0	0.00	0.00	0.000000	0.000000	No Solution	No Solution	19.791706

Pipe	P Static In (in. H2O std. (g))	P Static Out (in. H2O std. (g))	dT Stag. (deg. F)	T Stag. Inlet (deg. F)	T Stag. Outlet (deg. F)	T Static In (deg. F)	T Static Out (deg. F)	dH Stag. (Btu/lbm)	H Stag. In (Btu/lbm)
1	-0.112800	-0.46849	0.00012207	115.00	115.00	114.95	114.95	-1.391E-06	206.1
2	-1.748468	-1.86977	-0.00006104	115.00	115.00	114.95	114.95	1.520E-05	206.1
3	-2.390660	-4.00283	-0.00115967	115.00	115.00	114.76	114.76	3.501E-05	206.1
4	-3.620902	-3.67272	0.00000000	115.00	115.00	114.95	114.95	2.185E-05	206.1
5	-4.195990	-4.26114	0.00000000	115.00	115.00	114.76	114.76	7.118E-06	206.1
6	-4.819518	-4.88837	-61.74975586	875.00	813.25	874.75	813.02	-1.543E+01	393.8
7	-5.175896	-5.41200	-104.31701660	813.25	708.93	812.78	708.53	-2.600E+01	378.4

AFT Arrow 3.0 Output (5 of 13) 2/22/2006
DMJMH+N

AFT Arrow Model Main OGTS Case 3 (115°F, Heat Transfer, Fan Curve @ 3550 RPM, Dirty Filters)

Pipe	P Static In (in. H2O std. (g))	P Static Out (in. H2O std. (g))	dT Stag. (deg. F)	T Stag. Inlet (deg. F)	T Stag. Outlet (deg. F)	T Static In (deg. F)	T Static Out (deg. F)	dH Stag. (Btu/lbm)	H Stag. In (Btu/lbm)
8	-5.608591	-5.62857	-4.15844727	708.93	704.77	708.74	704.58	-1.034E+00	352.4
9	-5.827196	-5.90576	-25.97546387	704.77	678.80	704.58	678.61	-6.460E+00	351.4
16	-21.224264	-21.41969	-0.62707520	143.22	142.59	143.05	142.43	-1.530E-01	213.0
17	-21.642942	-21.65305	-0.09570313	142.59	142.49	142.43	142.33	-2.337E-02	212.8
18	-21.871393	-21.92020	-0.08520508	142.49	142.41	142.33	142.24	-2.079E-02	212.8
19	-26.885336	-26.97139	-0.08498094	142.40	142.32	142.24	142.15	-2.073E-02	212.8
20	-72.813164	-72.87259	-0.10821533	142.29	142.18	142.07	141.96	-2.640E-02	212.7
21	-72.872589	-72.92699	-0.06738281	142.18	142.11	141.96	141.89	-1.645E-02	212.7
22	-81.930809	-81.98764	-0.07391357	142.10	142.03	141.87	141.80	-1.804E-02	212.7
23	-85.169434	-85.44709	-0.21289063	167.03	166.82	166.77	166.56	-5.200E-02	218.8
24	-85.715614	-85.71791	-0.03216553	166.82	166.78	166.56	166.53	-7.860E-03	218.7
25	-85.862732	-85.93950	-0.12371826	166.78	166.66	166.53	166.40	-3.021E-02	218.7
26	-86.204300	-86.26797	-0.19372559	166.66	166.47	166.40	166.21	-4.733E-02	218.7
27	-92.809799	-92.88166	-0.28692627	166.46	166.18	166.19	165.91	-7.008E-02	218.6
28	-96.880898	-96.88370	-0.03808594	166.17	166.14	165.90	165.86	-9.314E-03	218.6
29	-96.972900	-96.97569	-0.03808594	166.14	166.10	165.86	165.82	-9.307E-03	218.6
30	-97.064919	-97.07619	-0.15209961	166.10	165.94	165.82	165.67	-3.716E-02	218.6
31	-97.076195	-97.15755	-1.08612061	165.94	164.86	165.67	164.58	-2.653E-01	218.5
32	-97.428268	-97.51570	-0.03717041	164.86	164.82	164.58	164.55	-9.074E-03	218.3
33	-97.675171	-97.98293	-0.31121826	142.24	141.93	141.89	141.58	-7.591E-02	212.7
35	-118.997032	-119.36925	-11.90319824	271.93	260.02	271.64	259.75	-2.917E+00	244.5
36	-119.369247	-119.37384	-0.34613037	260.02	259.68	259.75	259.40	-8.483E-02	241.5
37	-119.623070	-119.62687	-0.28497314	259.68	259.39	259.40	259.12	-6.983E-02	241.5
38	-119.874405	-119.88241	-0.59399414	259.39	258.80	259.11	258.52	-1.456E-01	241.4
39	-120.771317	-120.91152	-0.21655273	258.80	258.58	257.92	257.70	-5.304E-02	241.2
40	1.219656	0.81143	-1.08892822	373.44	372.35	373.06	371.97	-2.679E-01	269.4
41	0.418889	0.41451	-0.26586914	372.35	372.08	371.97	371.71	-6.541E-02	269.1
42	0.024366	0.01998	-0.26562500	372.08	371.82	371.71	371.44	-6.534E-02	269.0
43	0.002719	-0.02088	-56.22186279	371.82	315.59	371.81	315.58	-1.382E+01	269.0
50	-0.288560	-1.40378	-0.00048828	115.00	115.00	114.88	114.88	3.868E-07	206.1
51	-3.696850	-3.95320	-0.00018311	115.00	115.00	114.88	114.88	1.400E-05	206.1
52	-4.333789	-4.50012	-0.00006104	115.00	115.00	114.88	114.88	2.294E-05	206.1
53	-4.937836	-5.16103	0.00000000	115.00	115.00	114.88	114.88	4.597E-05	206.1
54	-5.542542	-6.09949	0.00018311	115.00	115.00	114.88	114.88	1.619E-04	206.1
55	-6.880569	-7.02629	-2.44860840	447.03	444.58	446.32	443.87	-6.039E-01	287.5
60	0.000000	0.00000	0.00000000	115.00	115.00	115.00	115.00	0.000E+00	206.1
61	0.000000	0.00000	0.00000000	115.00	115.00	115.00	115.00	0.000E+00	206.1
62	-4.304935	-4.30494	0.00000000	561.79	561.79	561.79	561.79	0.000E+00	315.9
63	-4.304935	-4.30494	0.00000000	561.79	561.79	561.79	561.79	0.000E+00	315.9
64	-7.355607	-7.48942	-6.10516357	444.58	438.48	443.87	437.78	-1.505E+00	286.9
65	-7.936317	-8.02874	-4.79626465	438.48	433.68	438.44	433.64	-1.182E+00	285.4
66	-13.437652	-13.84749	-37.46490479	433.68	396.21	433.34	395.90	-9.230E+00	284.2
67	-14.284379	-14.55063	-5.49420166	396.21	390.72	395.90	390.41	-1.352E+00	275.0
68	-14.983934	-15.36331	-9.13330078	390.72	381.59	390.41	381.28	-2.248E+00	273.6
69	-19.746986	-19.78244	-3.33422852	381.59	378.25	381.50	378.16	-8.204E-01	271.4
70	-20.444801	-20.90688	-77.47003174	378.25	300.78	378.16	300.71	-1.904E+01	270.6
80	0.000000	0.00000	0.00000000	115.00	115.00	115.00	115.00	0.000E+00	206.1
81	0.000000	0.00000	0.00000000	115.00	115.00	115.00	115.00	0.000E+00	206.1
82	0.000000	0.00000	0.00000000	115.00	115.00	115.00	115.00	0.000E+00	206.1
83	-17.021648	-17.02165	0.00000000	115.06	115.06	115.06	115.06	0.000E+00	206.1
84	-17.021648	-17.02165	0.00000000	115.06	115.06	115.06	115.06	0.000E+00	206.1
90	-0.339034	-1.32950	-0.00036621	115.00	115.00	114.86	114.86	-3.381E-08	206.1
91	-5.970618	-6.48256	-0.00036621	115.00	115.00	114.85	114.85	1.597E-05	206.1
92	-21.060753	-21.46628	-0.00006104	114.98	114.98	114.83	114.83	6.464E-05	206.1

AFT Arrow 3.0 Output (6 of 13) 2/22/2006
DMJMH+N

AFT Arrow Model Main OGTS Case 3 (115°F, Heat Transfer, Fan Curve @ 3550 RPM, Dirty Filters)

Pipe	P Static In (in. H2O std. (g))	P Static Out (in. H2O std. (g))	dT Stag. (deg. F)	T Stag. Inlet (deg. F)	T Stag. Outlet (deg. F)	T Static In (deg. F)	T Static Out (deg. F)	dH Stag. (Btu/lbm)	H Stag. In (Btu/lbm)
93	-21.515358	-21.52019	0.00000000	115.06	115.06	114.79	114.79	-1.248E-05	206.1
94	-21.520189	-21.53867	-0.00024414	115.06	115.05	114.79	114.78	-4.772E-05	206.1
100	-0.385257	-1.16910	0.00000000	115.00	115.00	114.84	114.84	0.000E+00	206.1
101	-2.103420	-2.30560	-0.00018311	115.00	115.00	114.84	114.84	7.626E-07	206.1
102	-96.607384	-96.61217	0.00012207	114.92	114.92	114.65	114.65	2.520E-05	206.1
103	-96.859779	-97.04372	0.00061035	114.92	114.92	114.65	114.65	1.869E-04	206.1
200	0.000000	0.00000	0.00000000	115.00	115.00	115.00	115.00	0.000E+00	206.1
201	0.000000	0.00000	0.00000000	115.00	115.00	115.00	115.00	0.000E+00	206.1
202	No Solution	No Solution	0.00000000	70.00	70.00	70.00	70.00	-9.502E-03	195.1
203	19.791706	19.79171	0.00000000	70.00	70.00	70.00	70.00	0.000E+00	195.1
X204	-19.395809	-72.45510	72.17803955	70.00	142.18	70.00	142.18	1.762E+01	195.1
210	0.000000	0.00000	0.00000000	115.00	115.00	115.00	115.00	0.000E+00	206.1
211	0.000000	0.00000	0.00000000	115.00	115.00	115.00	115.00	0.000E+00	206.1
212	0.000000	0.00000	0.00000000	115.00	115.00	115.00	115.00	0.000E+00	206.1
213	No Solution	No Solution	45.00000000	70.00	115.00	70.00	115.00	1.097E+01	195.1
214	No Solution	No Solution	0.00000000	115.00	115.00	115.00	115.00	3.434E-03	206.1
215	No Solution	No Solution	0.00000000	115.00	115.00	115.00	115.00	5.307E-03	206.1
625	-81.709038	-81.70904	0.00000000	195.55	195.55	195.55	195.55	0.000E+00	225.8
631	-93.045563	-93.04556	0.00000000	195.55	195.55	195.55	195.55	0.000E+00	225.8
636	-115.386269	-115.38627	0.00000000	288.43	288.43	288.43	288.43	0.000E+00	248.5
637	-20.876730	-20.90036	-0.00079346	115.28	115.28	115.00	115.00	-2.727E-04	206.1
X638	No Solution	19.79171	-45.00000000	115.00	70.00	115.00	70.00	-1.098E+01	206.1

Pipe	H Stag. Out (Btu/lbm)	H Static In (Btu/lbm)	H Static Out (Btu/lbm)	Rho Stag. In (lbm/ft3)	Rho Stag. Out (lbm/ft3)	Heat Transfer Model	Heat Flux (Btu/hr-ft2)	Heat Rate (Btu/hr)
1	206.1	206.1	206.1	0.06719	0.06713	Gen'l Heat Tran.	-1.889E-04	-1.600E-03
2	206.1	206.1	206.1	0.06692	0.06690	Gen'l Heat Tran.	1.270E-03	1.748E-02
3	206.1	206.0	206.0	0.06689	0.06662	Gen'l Heat Tran.	2.588E-03	4.027E-02
4	206.1	206.1	206.1	0.06660	0.06659	Gen'l Heat Tran.	3.064E-03	2.513E-02
5	206.1	206.0	206.0	0.06658	0.06657	Gen'l Heat Tran.	4.237E-03	8.188E-03
6	378.4	393.8	378.3	0.02858	0.02996	Gen'l Heat Tran.	-1.864E+03	-1.775E+04
7	352.4	378.3	352.3	0.02996	0.03261	Gen'l Heat Tran.	-1.920E+03	-2.991E+04
8	351.4	352.3	351.3	0.03258	0.03269	Gen'l Heat Tran.	-1.499E+03	-1.190E+03
9	344.9	351.3	344.8	0.03268	0.03341	Gen'l Heat Tran.	-1.459E+03	-7.430E+03
16	212.8	212.9	212.8	0.06067	0.06070	Gen'l Heat Tran.	-3.215E+01	-1.984E+03
17	212.8	212.8	212.7	0.06066	0.06067	Gen'l Heat Tran.	-3.173E+01	-3.029E+02
18	212.8	212.7	212.7	0.06064	0.06064	Gen'l Heat Tran.	-3.163E+01	-2.695E+02
19	212.7	212.7	212.7	0.05983	0.05983	Gen'l Heat Tran.	-3.153E+01	-2.687E+02
20	212.7	212.7	212.7	0.05241	0.05241	Gen'l Heat Tran.	-3.138E+01	-3.423E+02
21	212.7	212.7	212.6	0.05241	0.05241	Gen'l Heat Tran.	-3.128E+01	-2.132E+02
22	212.7	212.6	212.6	0.05095	0.05095	Gen'l Heat Tran.	-3.119E+01	-2.339E+02
23	218.7	218.7	218.7	0.04842	0.04839	Gen'l Heat Tran.	-5.992E+01	-6.740E+02
24	218.7	218.7	218.7	0.04835	0.04835	Gen'l Heat Tran.	-5.978E+01	-1.019E+02
25	218.7	218.7	218.6	0.04833	0.04833	Gen'l Heat Tran.	-5.969E+01	-3.917E+02
26	218.6	218.6	218.6	0.04829	0.04829	Gen'l Heat Tran.	-5.951E+01	-6.136E+02
27	218.6	218.6	218.5	0.04728	0.04729	Gen'l Heat Tran.	-5.922E+01	-9.084E+02
28	218.6	218.5	218.5	0.04666	0.04667	Gen'l Heat Tran.	-5.903E+01	-1.207E+02
29	218.6	218.5	218.5	0.04665	0.04665	Gen'l Heat Tran.	-5.899E+01	-1.206E+02
30	218.5	218.5	218.5	0.04664	0.04665	Gen'l Heat Tran.	-5.888E+01	-4.817E+02
31	218.3	218.5	218.2	0.04665	0.04672	Gen'l Heat Tran.	-5.816E+01	-3.439E+03
32	218.2	218.2	218.2	0.04668	0.04667	Gen'l Heat Tran.	-5.751E+01	-1.176E+02
33	212.7	212.6	212.6	0.04842	0.04839	Gen'l Heat Tran.	-3.965E+01	-1.798E+03
35	241.5	244.4	241.5	0.03695	0.03751	Gen'l Heat Tran.	-2.042E+02	-6.910E+04
36	241.5	241.5	241.4	0.03751	0.03753	Gen'l Heat Tran.	-1.959E+02	-2.009E+03

AFT Arrow 3.0 Output (7 of 13) 2/22/2006
DMJMH+N

AFT Arrow Model Main OGTS Case 3 (115°F, Heat Transfer, Fan Curve @ 3550 RPM, Dirty Filters)

Pipe	H Stag. Out (Btu/lbm)	H Static In (Btu/lbm)	H Static Out (Btu/lbm)	Rho Stag. In (lbm/ft3)	Rho Stag. Out (lbm/ft3)	Heat Transfer Model	Heat Flux (Btu/hr-ft2)	Heat Rate (Btu/hr)
37	241.4	241.4	241.3	0.03750	0.03751	Gen'l Heat Tran.	-1.955E+02	-1.654E+03
38	241.2	241.3	241.2	0.03748	0.03751	Gen'l Heat Tran.	-1.949E+02	-3.448E+03
39	241.2	241.0	241.0	0.03750	0.03749	Gen'l Heat Tran.	-1.743E+02	-1.256E+03
40	269.1	269.3	269.0	0.04655	0.04656	Gen'l Heat Tran.	-3.831E+02	-6.345E+03
41	269.0	269.0	269.0	0.04651	0.04653	Gen'l Heat Tran.	-3.821E+02	-1.549E+03
42	269.0	269.0	268.9	0.04648	0.04650	Gen'l Heat Tran.	-3.817E+02	-1.548E+03
43	255.2	269.0	255.2	0.04642	0.04979	Gen'l Heat Tran.	-1.748E+02	-3.273E+05
50	206.1	206.0	206.0	0.06719	0.06701	Gen'l Heat Tran.	2.725E-05	3.135E-04
51	206.1	206.0	206.0	0.06662	0.06657	Gen'l Heat Tran.	3.812E-03	1.134E-02
52	206.1	206.0	206.0	0.06651	0.06648	Gen'l Heat Tran.	4.493E-03	1.860E-02
53	206.1	206.0	206.0	0.06641	0.06637	Gen'l Heat Tran.	5.072E-03	3.726E-02
54	206.1	206.0	206.0	0.06630	0.06621	Gen'l Heat Tran.	5.273E-03	1.312E-01
55	286.9	287.3	286.7	0.04195	0.04204	Gen'l Heat Tran.	-1.132E+03	-1.184E+03
60	206.1	206.1	206.1	0.06719	0.06719	Gen'l Heat Tran.	0.000E+00	0.000E+00
61	206.1	206.1	206.1	0.06719	0.06719	Gen'l Heat Tran.	0.000E+00	0.000E+00
62	315.9	315.9	315.9	0.03737	0.03737	Gen'l Heat Tran.	0.000E+00	0.000E+00
63	315.9	315.9	315.9	0.03737	0.03737	Gen'l Heat Tran.	0.000E+00	0.000E+00
64	285.4	286.7	285.2	0.04201	0.04228	Gen'l Heat Tran.	-1.117E+03	-2.952E+03
65	284.2	285.4	284.2	0.04212	0.04233	Gen'l Heat Tran.	-5.666E+02	-2.318E+03
66	275.0	284.1	274.9	0.04179	0.04358	Gen'l Heat Tran.	-8.998E+02	-1.810E+04
67	273.6	274.9	273.6	0.04353	0.04378	Gen'l Heat Tran.	-8.349E+02	-2.651E+03
68	271.4	273.6	271.3	0.04373	0.04416	Gen'l Heat Tran.	-8.124E+02	-4.408E+03
69	270.6	271.4	270.5	0.04361	0.04378	Gen'l Heat Tran.	-5.902E+02	-1.609E+03
70	251.5	270.5	251.5	0.04370	0.04809	Gen'l Heat Tran.	-3.898E+02	-3.733E+04
80	206.1	206.1	206.1	0.06719	0.06719	Gen'l Heat Tran.	0.000E+00	0.000E+00
81	206.1	206.1	206.1	0.06719	0.06719	Gen'l Heat Tran.	0.000E+00	0.000E+00
82	206.1	206.1	206.1	0.06719	0.06719	Gen'l Heat Tran.	0.000E+00	0.000E+00
83	206.1	206.1	206.1	0.06430	0.06430	Gen'l Heat Tran.	0.000E+00	0.000E+00
84	206.1	206.1	206.1	0.06430	0.06430	Gen'l Heat Tran.	0.000E+00	0.000E+00
90	206.1	206.0	206.0	0.06719	0.06703	Gen'l Heat Tran.	-1.334E-05	-2.813E-04
91	206.1	206.0	206.0	0.06624	0.06615	Gen'l Heat Tran.	6.143E-03	1.328E-01
92	206.1	206.0	206.0	0.06368	0.06361	Gen'l Heat Tran.	2.368E-02	5.378E-01
93	206.1	206.0	206.0	0.06364	0.06364	Gen'l Heat Tran.	-8.465E-02	-1.373E-01
94	206.1	206.0	206.0	0.06364	0.06364	Gen'l Heat Tran.	-8.445E-02	-5.250E-01
100	206.1	206.0	206.0	0.06719	0.06706	Gen'l Heat Tran.	0.000E+00	0.000E+00
101	206.1	206.0	206.0	0.06690	0.06687	Gen'l Heat Tran.	1.487E-03	8.177E-03
102	206.1	206.0	206.0	0.05088	0.05088	Gen'l Heat Tran.	1.136E-01	2.702E-01
103	206.1	206.0	206.0	0.05084	0.05081	Gen'l Heat Tran.	1.133E-01	2.005E+00
200	206.1	206.1	206.1	0.06719	0.06719	Gen'l Heat Tran.	0.000E+00	0.000E+00
201	206.1	206.1	206.1	0.06719	0.06719	Gen'l Heat Tran.	0.000E+00	0.000E+00
202	195.1	195.1	195.1	0.06920	0.07656	Gen'l Heat Tran.	0.000E+00	0.000E+00
203	195.1	195.1	195.1	0.07657	0.07657	Gen'l Heat Tran.	0.000E+00	0.000E+00
X204	212.7	195.1	212.7	0.06934	0.05241	Gen'l Heat Tran.	0.000E+00	0.000E+00
210	206.1	206.1	206.1	0.06719	0.06719	Gen'l Heat Tran.	0.000E+00	0.000E+00
211	206.1	206.1	206.1	0.06719	0.06719	Gen'l Heat Tran.	0.000E+00	0.000E+00
212	206.1	206.1	206.1	0.06719	0.06719	Gen'l Heat Tran.	0.000E+00	0.000E+00
213	206.1	195.1	206.1	0.07693	0.07144	Gen'l Heat Tran.	0.000E+00	0.000E+00
214	206.1	206.1	206.1	0.07143	0.06847	Gen'l Heat Tran.	0.000E+00	0.000E+00
215	206.1	206.1	206.1	0.06847	0.06390	Gen'l Heat Tran.	0.000E+00	0.000E+00
625	225.8	225.8	225.8	0.04676	0.04676	Gen'l Heat Tran.	0.000E+00	0.000E+00
631	225.8	225.8	225.8	0.04507	0.04507	Gen'l Heat Tran.	0.000E+00	0.000E+00
636	248.5	248.5	248.5	0.03656	0.03656	Gen'l Heat Tran.	0.000E+00	0.000E+00
637	206.1	206.1	206.1	0.06373	0.06373	Gen'l Heat Tran.	-4.607E-01	-7.315E-01
X638	195.1	206.1	195.1	0.06357	0.07657	Gen'l Heat Tran.	0.000E+00	0.000E+00

AFT Arrow 3.0 Output (8 of 13) 2/22/2006
DMJMH+N

AFT Arrow Model Main OGTS Case 3 (115°F, Heat Transfer, Fan Curve @ 3550 RPM, Dirty Filters)

All Junction Table

Jct	Name	Mass Flow Thru Junction (lbm/hr)	dP Stag. Total (in. H2O std.)	P Stag. In (in. H2O std. (g))	P Stag. Out (in. H2O std. (g))	P Static In (in. H2O std. (g))
1	Assigned Pressure	1,150.3	0.00000	0.0000	0.00000	-0.11280
2	ICV Filter N02-010	1,150.3	1.27961	-0.3556	-1.63519	-0.46849
3	Area Change	1,150.3	0.04982	-1.7565	-1.80631	-1.86977
4	Area Change	1,150.3	0.09103	-3.4161	-3.50710	-4.00283
5	Area Change	1,150.3	0.05005	-3.5589	-3.60894	-3.67272
6	ICV	1,150.3	0.88026	-3.6740	-4.55424	-4.26114
7	Area Change	1,150.3	0.01244	-4.6353	-4.64774	-4.88837
8	HV-114	1,150.3	0.44899	-4.9269	-5.37584	-5.41200
9	HV-115	1,150.3	0.19854	-5.3966	-5.59515	-5.62857
16	Tee or Wye	N/A	See Losses	-20.8637	-20.86374	-21.30346
17	36-V-049	12,962.8	0.22304	-21.0594	-21.28239	-21.41969
18	HV-125	12,962.8	0.21813	-21.2926	-21.51069	-21.65305
19	Packed Tower	12,962.8	4.96028	-21.5595	-26.51977	-21.92020
20	Venturi/Demister	12,962.8	45.78988	-26.6058	-72.39568	-26.97139
21	Tee or Wye	N/A	0.00000	-72.4551	-72.45510	-72.87259
22	Condenser Demister	12,962.8	8.99184	-72.5095	-81.50134	-72.92699
23	WSS Heater	12,962.8	3.15934	-81.5581	-84.71747	-81.98764
24	WSS Valve V-072	12,962.8	0.26813	-84.9949	-85.26302	-85.44712
25	Tee or Wye	N/A	See Losses	-81.7090	-81.70904	-82.16697
26	HV-313	12,962.8	0.26442	-85.4867	-85.75110	-85.93950
27	HEPA	12,962.8	6.53203	-85.8148	-92.34686	-86.26797
28	HV-314a	12,962.8	0.08906	-96.4147	-96.50375	-96.88370
29	HEGA	12,962.8	3.99302	-92.4188	-96.41185	-92.88166
30	HV-314b	12,962.8	0.08908	-96.5066	-96.59566	-96.97569
31	Tee or Wye	N/A	0.00000	-93.0456	-93.04556	-93.52026
32	36-V-017	12,962.8	0.27029	-96.6891	-96.95936	-97.15755
33	Tee or Wye	N/A	See Losses	-97.0609	-97.06094	-97.60968
34	SCR	23,685.8	21.24233	-97.3684	-118.61072	-97.98293
36	Tee or Wye	N/A	0.00000	-115.3863	-115.38627	-115.77168
37	HV-525	23,685.8	0.24886	-118.9935	-119.24238	-119.37384
38	36-V-024	23,685.8	0.24721	-119.2463	-119.49353	-119.62687
39	Area Change	23,685.8	0.06222	-119.5018	-119.56404	-119.88241
40	Fan N31-025	23,685.8	-121.56226	-119.7040	1.85826	-120.91152
41	36-V-080	23,685.8	0.39192	1.4498	1.05794	0.81143
42	HV-526	23,685.8	0.38954	1.0534	0.66384	0.41451
43	Branch	23,685.8	0.63892	0.6593	0.02035	0.01998
44	Assigned Pressure	23,685.8	0.00000	0.0000	0.00000	-0.01645
50	Assigned Pressure	810.5	0.00000	0.0000	0.00000	-0.28856
51	AWTE Filter N22-026	810.5	2.29139	-1.1144	-3.40578	-1.40378
52	HV-111	810.5	0.38028	-3.6620	-4.04225	-3.95320
53	AWTE	810.5	0.43738	-4.2084	-4.64584	-4.50012
54	HV-113	810.5	0.38122	-4.8689	-5.25010	-5.16103
55	Tee or Wye	N/A	See Losses	-5.7826	-5.78261	-6.38439
60	Assigned Pressure	0.0	0.00000	0.0000	0.00000	0.00000
61	SMF Dilution Filter N02-049	0.0	0.00000	0.0000	0.00000	0.00000
X62	TV-014	0.0	4.30493	0.0000	-4.30494	0.00000
63	Area Change	0.0	0.00000	-4.3049	-4.30494	-4.30494
64	Tee or Wye	N/A	See Losses	-6.2593	-6.25926	-7.35410
65	HV-002	1,960.8	1.47620	-6.4001	-7.87631	-7.48942
66	SMF N02-019	1,960.8	4.94105	-7.9690	-12.91008	-8.02874
67	HV-003	1,960.8	0.43632	-13.3415	-13.77782	-13.84749
68	HV-004	1,960.8	0.43274	-14.0470	-14.47970	-14.55063

AFT Arrow 3.0 Output (9 of 13) 2/22/2006
DMJMH+N

AFT Arrow Model Main OGTS Case 3 (115°F, Heat Transfer, Fan Curve @ 3550 RPM, Dirty Filters)

Jct	Name	Mass Flow Thru Junction (lbm/hr)	dP Stag. Total (in. H2O std.)	P Stag. In (in. H2O std. (g))	P Stag. Out (in. H2O std. (g))	P Static In (in. H2O std. (g))
69	SMF N02-020	1,960.8	4.74095	-14.8640	-19.60496	-15.36331
70	HV-005	1,960.8	0.66211	-19.6410	-20.30309	-19.78244
80	Assigned Pressure	0.0	0.00000	0.0000	0.00000	0.00000
81	WRS Tank Filter	0.0	0.00000	0.0000	0.00000	0.00000
82	Area Change	0.0	0.00000	0.0000	0.00000	0.00000
X83	32-V-003	0.0	17.02164	0.0000	-17.02165	0.00000
84	Area Change	0.0	0.00000	-17.0216	-17.02165	-17.02165
90	Assigned Pressure	8,320.0	0.00000	0.0000	0.00000	-0.33903
91	WSS Filter N02-101/102	8,320.0	4.63703	-0.9896	-5.62667	-1.32950
92	FV-016	8,320.0	14.56480	-6.1382	-20.70298	-6.48256
93	Tee or Wye	N/A	See Losses	-20.8889	-20.88887	-21.40747
94	Tee or Wye	N/A	0.00000	-20.8937	-20.89368	-21.52019
100	Assigned Pressure	10,723.0	0.00000	0.0000	0.00000	-0.38526
101	SCR Filter N02-022	10,723.0	0.93339	-0.7831	-1.71647	-1.16910
102	HV-504	10,723.0	94.17975	-1.9185	-96.09824	-2.30560
103	36-V-019	10,723.0	0.24720	-96.1030	-96.35021	-96.61217
200	Assigned Pressure	0.0	0.00000	0.0000	0.00000	0.00000
201	WSS Filter N02-093	0.0	0.00000	0.0000	0.00000	0.00000
X202	FV-331	0.0	20.18748	0.0000	-20.18750	0.00000
203	Tee or Wye	0.0	0.00000	19.7917	19.79171	19.79171
204	Tee or Wye	0.0	0.00000	19.7917	19.79171	19.79171
210	Assigned Pressure	0.0	0.00000	0.0000	0.00000	0.00000
211	SWS Tank Filter N02-014A	0.0	0.00000	0.0000	0.00000	0.00000
212	Area Change	0.0	0.00000	0.0000	0.00000	0.00000
X213	37-V-004	0.0	-21.77087	0.0000	21.77087	0.00000
214	Area Change	0.0	No Solution	No Solution	No Solution	No Solution
215	Area Change	0.0	No Solution	No Solution	No Solution	No Solution
625	Dead End	0.0	0.00000	-81.7090	-81.70904	-81.70904
631	Dead End	0.0	0.00000	-93.0456	-93.04556	-93.04556
636	Dead End	0.0	0.00000	-115.3863	-115.38627	-115.38627
637	Waste Feed Blower	2,682.0	0.00000	-20.2292	-20.22915	-20.87681
638	Assigned Flow Vac Pump	0.0	No Solution	No Solution	No Solution	No Solution

Jct	P Static Out (in. H2O std. (g))	dT Stag. (deg. F)	T Stag. Inlet (deg. F)	T Stag. Outlet (deg. F)	T Static In (deg. F)	T Static Out (deg. F)	dH Stag. (Btu/lbm)	H Stag. In (Btu/lbm)	H Stag. Out (Btu/lbm)
1	-0.112800	0.00000000	115.00	115.00	115.00	115.00	0.000	206.1	206.1
2	-1.748468	-0.00103760	115.00	115.00	114.95	114.95	0.000	206.1	206.1
3	-2.390660	-0.00030518	115.00	115.00	114.95	114.76	0.000	206.1	206.1
4	-3.620902	0.00024414	115.00	115.00	114.76	114.95	0.000	206.1	206.1
5	-4.195990	-0.00030518	115.00	115.00	114.95	114.76	0.000	206.1	206.1
6	-4.819518	760.00001526	115.00	875.00	114.76	874.75	-187.755	206.1	393.8
7	-5.175896	0.00012207	813.25	813.25	813.02	812.78	0.000	378.4	378.4
8	-5.608591	0.00000000	708.93	708.93	708.53	708.74	0.000	352.4	352.4
9	-5.827196	0.00000000	704.77	704.77	704.58	704.58	0.000	351.4	351.4
16	-21.303459	0.00000000	143.22	143.22	143.02	143.02	N/A	213.0	213.0
17	-21.642942	0.00012207	142.59	142.59	142.43	142.43	0.000	212.8	212.8
18	-21.871393	-0.00012207	142.49	142.49	142.33	142.33	0.000	212.8	212.8
19	-26.885336	-0.00360107	142.41	142.40	142.24	142.24	0.000	212.8	212.8
20	-72.813164	-0.03314209	142.32	142.29	142.15	142.07	0.000	212.7	212.7
21	-72.872589	0.00000000	142.18	142.18	141.96	141.96	N/A	212.7	212.7
22	-81.930809	-0.00653076	142.11	142.10	141.89	141.87	0.000	212.7	212.7
23	-85.169434	25.00000000	142.03	167.03	141.80	166.77	-6.107	212.7	218.8
24	-85.715614	-0.00018311	166.82	166.82	166.56	166.56	0.000	218.7	218.7
25	-82.166969	0.00000000	195.55	195.55	195.29	195.29	N/A	225.8	225.8

AFT Arrow 3.0 Output (10 of 13) 2/22/2006
DMJMH+N

AFT Arrow Model Main OGTS Case 3 (115°F, Heat Transfer, Fan Curve @ 3550 RPM, Dirty Filters)

Jct	P Static Out (in. H2O std. (g))	dT Stag. (deg. F)	T Stag. Inlet (deg. F)	T Stag. Outlet (deg. F)	T Static In (deg. F)	T Static Out (deg. F)	dH Stag. (Btu/lbm)	H Stag. In (Btu/lbm)	H Stag. Out (Btu/lbm)
26	-86.204300	-0.00018311	166.66	166.66	166.40	166.40	0.000	218.7	218.7
27	-92.809799	-0.00427246	166.47	166.46	166.21	166.19	0.000	218.6	218.6
28	-96.972900	-0.00006104	166.14	166.14	165.86	165.86	0.000	218.6	218.6
29	-96.880898	-0.00262451	166.18	166.17	165.91	165.90	0.000	218.6	218.6
30	-97.064919	-0.00006104	166.10	166.10	165.82	165.82	0.000	218.6	218.6
31	-93.520256	0.00000000	195.55	195.55	195.26	195.26	N/A	225.8	225.8
32	-97.428268	-0.00018311	164.86	164.86	164.58	164.58	0.000	218.3	218.3
33	-97.609680	0.00000000	142.24	142.24	141.93	141.93	N/A	212.7	212.7
34	-118.997032	129.99998474	141.93	271.93	141.58	271.64	-31.805	212.7	244.5
36	-115.771683	0.00000000	288.43	288.43	288.14	288.14	N/A	248.5	248.5
37	-119.623070	-0.00012207	259.68	259.68	259.40	259.40	0.000	241.5	241.5
38	-119.874405	-0.00012207	259.39	259.39	259.12	259.11	0.000	241.4	241.4
39	-120.771317	-0.00018311	258.80	258.80	258.52	257.92	0.000	241.2	241.2
40	1.219656	114.85461426	258.58	373.44	257.70	373.06	-28.190	241.2	269.4
41	0.418889	-0.00012207	372.35	372.35	371.97	371.97	0.000	269.1	269.1
42	0.024366	-0.00012207	372.08	372.08	371.71	371.71	0.000	269.0	269.0
43	0.002719	0.00000000	371.82	371.82	371.44	371.81	0.000	269.0	269.0
44	-0.016446	0.00000000	115.00	115.00	115.00	115.00	0.000	206.1	206.1
50	-0.288560	0.00000000	115.00	115.00	115.00	115.00	0.000	206.1	206.1
51	-3.696850	-0.00183105	115.00	115.00	114.88	114.88	0.000	206.1	206.1
52	-4.333789	-0.00030518	115.00	115.00	114.88	114.88	0.000	206.1	206.1
53	-4.937836	-0.00030518	115.00	115.00	114.88	114.88	0.000	206.1	206.1
54	-5.542542	-0.00030518	115.00	115.00	114.88	114.88	0.000	206.1	206.1
55	-6.384386	0.00000000	447.02	447.02	446.63	446.63	N/A	287.5	287.5
60	0.000000	0.00000000	115.00	115.00	115.00	115.00	0.000	206.1	206.1
61	0.000000	0.00000000	115.00	115.00	115.00	115.00	0.000	206.1	206.1
X62	-4.304935	446.79054260	115.00	561.79	115.00	561.79	0.000	206.1	315.9
63	-4.304935	0.00000000	561.79	561.79	561.79	561.79	0.000	315.9	315.9
64	-7.354102	0.00000000	444.58	444.58	443.88	443.88	N/A	286.9	286.9
65	-7.936317	-0.00042725	438.48	438.48	437.78	438.44	0.000	285.4	285.4
66	-13.437652	-0.00097656	433.68	433.68	433.64	433.34	0.000	284.2	284.2
67	-14.284379	-0.00012207	396.21	396.21	395.90	395.90	0.000	275.0	275.0
68	-14.983934	0.00109863	390.72	390.72	390.41	390.41	0.000	273.6	273.6
69	-19.746986	-0.00128174	381.59	381.59	381.28	381.50	0.000	271.4	271.4
70	-20.444801	-0.00018311	378.25	378.25	378.16	378.16	0.000	270.6	270.6
80	0.000000	0.00000000	115.00	115.00	115.00	115.00	0.000	206.1	206.1
81	0.000000	0.00000000	115.00	115.00	115.00	115.00	0.000	206.1	206.1
82	0.000000	0.00000000	115.00	115.00	115.00	115.00	0.000	206.1	206.1
X83	-17.021648	0.05627441	115.00	115.06	115.00	115.06	0.000	206.1	206.1
84	-17.021648	0.00000000	115.06	115.06	115.06	115.06	0.000	206.1	206.1
90	-0.339034	0.00000000	115.00	115.00	115.00	115.00	0.000	206.1	206.1
91	-5.970618	-0.00378418	115.00	115.00	114.86	114.85	0.000	206.1	206.1
92	-21.060753	-0.01177979	115.00	114.98	114.85	114.83	0.000	206.1	206.1
93	-21.407469	0.00000000	115.06	115.06	114.83	114.83	N/A	206.1	206.1
94	-21.520189	0.00000000	115.06	115.06	114.79	114.79	N/A	206.1	206.1
100	-0.385257	0.00000000	115.00	115.00	115.00	115.00	0.000	206.1	206.1
101	-2.103420	-0.00097656	115.00	115.00	114.84	114.84	0.000	206.1	206.1
102	-96.607384	-0.07635498	115.00	114.92	114.84	114.65	0.000	206.1	206.1
103	-96.859779	-0.00024414	114.92	114.92	114.65	114.65	0.000	206.1	206.1
200	0.000000	0.00000000	115.00	115.00	115.00	115.00	0.000	206.1	206.1
201	0.000000	0.00000000	115.00	115.00	115.00	115.00	0.000	206.1	206.1
X202	-20.187496	-45.00000000	115.00	70.00	115.00	70.00	0.000	206.1	195.1
203	19.791706	0.00000000	70.00	70.00	70.00	70.00	N/A	195.1	195.1
204	19.791706	0.00000000	70.00	70.00	70.00	70.00	N/A	195.1	195.1

AFT Arrow 3.0 Output (11 of 13) 2/22/2006
DMJMH+N

AFT Arrow Model Main OGTS Case 3 (115°F, Heat Transfer, Fan Curve @ 3550 RPM, Dirty Filters)

Jct	P Static Out (in. H2O std. (g))	dT Stag. (deg. F)	T Stag. Inlet (deg. F)	T Stag. Outlet (deg. F)	T Static In (deg. F)	T Static Out (deg. F)	dH Stag. (Btu/lbm)	H Stag. In (Btu/lbm)	H Stag. Out (Btu/lbm)
210	0.000000	0.00000000	115.00	115.00	115.00	115.00	0.000	206.1	206.1
211	0.000000	0.00000000	115.00	115.00	115.00	115.00	0.000	206.1	206.1
212	0.000000	0.00000000	115.00	115.00	115.00	115.00	0.000	206.1	206.1
X213	21.770868	-45.00000000	115.00	70.00	115.00	70.00	0.000	206.1	195.1
214	No Solution	No Solution	No Solution	No Solution	No Solution	No Solution	0.000	No Solution	No Solution
215	No Solution	No Solution	No Solution	No Solution	No Solution	No Solution	0.000	No Solution	No Solution
625	-81.709038	0.00000000	195.55	195.55	195.55	195.55	0.000	225.8	225.8
631	-93.045563	0.00000000	195.55	195.55	195.55	195.55	0.000	225.8	225.8
636	-115.386269	0.00000000	288.43	288.43	288.43	288.43	0.000	248.5	248.5
637	-20.876730	0.00000000	115.28	115.28	115.00	115.00	0.000	206.1	206.1
638	No Solution	No Solution	No Solution	No Solution	No Solution	No Solution	0.000	No Solution	No Solution

Jct	H Static In (Btu/lbm)	H Static Out (Btu/lbm)	Sonic Area (inches2)
1	206.1	206.1	1.0094
2	206.1	206.1	1.0103
3	206.1	206.0	1.0139
4	206.0	206.1	1.0182
5	206.1	206.0	1.0186
6	206.0	393.8	1.0188
7	378.3	378.3	1.5251
8	352.3	352.3	1.4617
9	351.3	351.3	1.4608
16	212.9	212.9	N/A
17	212.8	212.8	12.3010
18	212.7	212.7	12.3077
19	212.7	212.7	12.3156
20	212.7	212.7	12.4830
21	212.7	212.7	N/A
22	212.6	212.6	14.2528
23	212.6	218.7	14.6622
24	218.7	218.7	15.1285
25	225.7	225.7	N/A
26	218.6	218.6	15.1506
27	218.6	218.6	15.1643
28	218.5	218.5	15.6969
29	218.5	218.5	15.4907
30	218.5	218.5	15.7013
31	225.7	225.7	N/A
32	218.2	218.2	15.6952
33	212.7	212.7	N/A
34	212.6	244.4	28.2078
36	248.4	248.4	N/A
37	241.4	241.4	33.2739
38	241.3	241.3	33.2977
39	241.2	241.0	33.3146
40	241.0	269.3	33.3338
41	269.0	269.0	24.9497
42	269.0	269.0	24.9706
43	268.9	269.0	N/A
44	206.1	206.1	24.1657
50	206.1	206.1	0.7112
51	206.0	206.0	0.7132
52	206.0	206.0	0.7179

AFT Arrow 3.0 Output (12 of 13) 2/22/2006
DMJMH+N

AFT Arrow Model Main OGTS Case 3 (115°F, Heat Transfer, Fan Curve @ 3550 RPM, Dirty Filters)

Jct	H Static In (Btu/lbm)	H Static Out (Btu/lbm)	Sonic Area (inches2)
53	206.0	206.0	0.7189
54	206.0	206.0	0.7201
55	287.4	287.4	N/A
60	206.1	206.1	0.0000
61	206.1	206.1	0.0000
X62	206.1	315.9	0.0000
63	315.9	315.9	0.0000
64	286.7	286.7	N/A
65	285.2	285.4	2.1899
66	284.2	284.1	2.1928
67	274.9	274.9	2.1761
68	273.6	273.6	2.1731
69	271.3	271.4	2.1659
70	270.5	270.5	2.1890
80	206.1	206.1	0.0000
81	206.1	206.1	0.0000
82	206.1	206.1	0.0000
X83	206.1	206.1	0.0000
84	206.1	206.1	0.0000
90	206.1	206.1	7.3009
91	206.0	206.0	7.3192
92	206.0	206.0	7.4159
93	206.0	206.0	N/A
94	206.0	206.0	N/A
100	206.1	206.1	9.4096
101	206.0	206.0	9.4282
102	206.0	206.0	9.4554
103	206.0	206.0	12.4259
200	206.1	206.1	0.0000
201	206.1	206.1	0.0000
X202	206.1	195.1	0.0000
203	195.1	195.1	N/A
204	195.1	195.1	N/A
210	206.1	206.1	0.0000
211	206.1	206.1	0.0000
212	206.1	206.1	0.0000
X213	206.1	195.1	0.0000
214	No Solution	No Solution	0.0000
215	No Solution	No Solution	0.0000
625	225.8	225.8	0.0000
631	225.8	225.8	0.0000
636	248.5	248.5	0.0000
637	206.1	206.1	2.4809
638	No Solution	No Solution	0.0000

Junction Loss Table

Jct	Pipe #	Pipe Dir.	dP Stag. Total (in. H2O std.)
16	P94	In	-0.04841
	P16	Out	0.000
	P70	In	0.08563
21	P21	Out	0.000
	P20	In	0.000

AFT Arrow 3.0 Output (13 of 13) 2/22/2006
DMJMH+N

AFT Arrow Model Main OGTS Case 3 (115°F, Heat Transfer, Fan Curve @ 3550 RPM, Dirty Filters)

Jct	Pipe #	Pipe Dir.	dP Stag. Total (in. H2O std.)
	P204	In	0.000
25	P24	In	0.000
	P625	In	0.000
	P25	Out	3.701
31	P30	In	0.000
	P31	Out	0.000
	P631	In	0.000
33	P32	In	0.01424
	P33	Out	0.000
	P103	In	0.5271
36	P35	In	0.000
	P36	Out	0.000
	P636	In	0.000
55	P9	In	0.1038
	P55	Out	0.000
	P54	In	-0.02402
64	P63	In	0.000
	P64	Out	0.000
	P55	In	0.3284
93	P92	In	-0.2193
	P93	Out	0.000
	P637	In	0.6361
94	P93	In	0.000
	P94	Out	0.000
	P84	In	0.000
203	P202	In	0.000
	P203	Out	0.000
	P638	In	0.000
204	P203	In	0.000
	P204	Out	0.000
	P215	In	0.000

Title: AFT Arrow Model Main OGTS Case 4 (115°F, Heat Transfer, Dirty Filters, Backdraft Damper)
Input File: C:\AFT Products\AFT Arrow\DBVS-OGTS-R2 Case 3.aro

Number Of Pipes= 83
Number Of Junctions= 84

Length March Solution Method with Mach Number Limits
Segments Per Pipe= 2
Mach Number Increment= 0.01
Pressure Tolerance= 0.0001 relative change
Mass Flow Rate Tolerance= 0.0001 relative change
Enthalpy Tolerance= 0.0001 relative change
Flow Relaxation= (Automatic)
Pressure Relaxation= (Automatic)
Resistance Relaxation= (Automatic)

Fluid Database: AFT Standard
Fluid: Air
Max Fluid Temperature Data= 1000 deg. K
Min Fluid Temperature Data= 200 deg. K
Molecular Weight =28.97 amu
Gas Constant =0.06855 Btu/lbm-R
Critical Pressure =37.25 atm
Critical Temperature =132.41 deg. K
Acentric Factor =0.021
Equation of State= Redlich-Kwong
Enthalpy Model= Generalized
Specific Heat Ratio Accuracy = High
Atmospheric Pressure= 14.3 psia
Gravitational Acceleration= 1 g
Standard Pressure= 14.696 psia
Standard Temperature= 60 deg. F
Turbulent Flow Above Reynolds Number= 4000
Laminar Flow Below Reynolds Number= 2300

Pipe Input Table

Pipe	Name	Pipe Defined	Length	Length Units	Hydraulic Diameter	Hydraulic Diam. Units	Friction Data Set	Roughness	Roughness Units	Losses (K)
1	Pipe	Yes	64	inches	6.065	inches	Unspecified	0.00015	feet	2.93
2	Pipe	Yes	104	inches	6.065	inches	Unspecified	0.00015	feet	0.71
3	Pipe	Yes	177.167	inches	4.026	inches	Unspecified	0.00015	feet	1.855
4	Pipe	Yes	62	inches	6.065	inches	Unspecified	0.00015	feet	0.24
5	Pipe	Yes	22	inches	4.026	inches	Unspecified	0.00015	feet	0
6	Pipe	Yes	72	inches	6.065	inches	Unspecified	0.00015	feet	0.08
7	Pipe	Yes	141.5	inches	5.047	inches	Unspecified	0.00015	feet	0
8	Pipe	Yes	6	inches	6.065	inches	Unspecified	0.00015	feet	0.07
9	Pipe	Yes	38.5	inches	6.065	inches	Unspecified	0.00015	feet	0.24
16	Pipe	Yes	181	inches	15.624	inches	Unspecified	0.00015	feet	0.36
17	Pipe	Yes	28	inches	15.624	inches	Unspecified	0.00015	feet	0
18	Pipe	Yes	25	inches	15.624	inches	Unspecified	0.00015	feet	0.11
19	Pipe	Yes	25	inches	15.624	inches	Unspecified	0.00015	feet	0.21
20	Pipe	Yes	32	inches	15.624	inches	Unspecified	0.00015	feet	0.11
21	Pipe	Yes	20	inches	15.624	inches	Unspecified	0.00015	feet	0.11
22	Pipe	Yes	22	inches	15.624	inches	Unspecified	0.00015	feet	0.11
23	Pipe	Yes	33	inches	15.624	inches	Unspecified	0.00015	feet	0.58
24	Pipe	Yes	5	inches	15.624	inches	Unspecified	0.00015	feet	0
25	Pipe	Yes	19.25	inches	15.624	inches	Unspecified	0.00015	feet	0.15
26	Pipe	Yes	30.25	inches	15.624	inches	Unspecified	0.00015	feet	0.11
27	Pipe	Yes	45	inches	15.624	inches	Unspecified	0.00015	feet	0.11
28	Pipe	Yes	6	inches	15.624	inches	Unspecified	0.00015	feet	0
29	Pipe	Yes	6	inches	15.624	inches	Unspecified	0.00015	feet	0
30	Pipe	Yes	24	inches	15.624	inches	Unspecified	0.00015	feet	0

AFT Arrow 3.0 Input (2 of 12) 2/24/2006 01:43 PM
DMJMH+N

AFT Arrow Model Main OGTS Case 4 (115°F, Heat Transfer, Dirty Filters, Backdraft Damper)

Pipe	Name	Pipe Defined	Length	Length Units	Hydraulic Diameter	Hydraulic Diam. Units	Friction Data Set	Roughness	Roughness Units	Losses (K)
31	Pipe	Yes	173.5	inches	15.624	inches	Unspecified	0.00015	feet	0
32	Pipe	Yes	6	inches	15.624	inches	Unspecified	0.00015	feet	0.18
33	Pipe	Yes	106.25	inches	19.564	inches	Unspecified	0.00015	feet	0.42
35	Pipe	Yes	660	inches	23.5	inches	Unspecified	0.00015	feet	0.57
36	Pipe	Yes	20	inches	23.5	inches	Unspecified	0.00015	feet	0
37	Pipe	Yes	16.5	inches	23.5	inches	Unspecified	0.00015	feet	0
38	24" Sch 10	Yes	34.5	inches	23.5	inches	Unspecified	0.00015	feet	0
39	EJ-604	Yes	18.75	inches	17.624	inches	Unspecified	0.00015	feet	0.1
40	EJ-605	Yes	38.8	inches	19.564	inches	Unspecified	0.00015	feet	0.61
41	EJ-605	Yes	9.5	inches	19.564	inches	Unspecified	0.00015	feet	0
42	EJ-605	Yes	9.5	inches	19.564	inches	Unspecified	0.00015	feet	0
43	Stack	Yes	149	feet	48	inches	Unspecified	0.00015	feet	0.88
50	Pipe	Yes	131	inches	4.026	inches	Unspecified	0.00015	feet	3.16
51	Pipe	Yes	33.875	inches	4.026	inches	Unspecified	0.00015	feet	0.7
52	Pipe	Yes	47.125	inches	4.026	inches	Unspecified	0.00015	feet	0.32
53	Pipe	Yes	83.625	inches	4.026	inches	Unspecified	0.00015	feet	0.32
54	Pipe	Yes	283.25	inches	4.026	inches	Unspecified	0.00015	feet	0.4
55	Pipe	Yes	9.5	inches	5.047	inches	Unspecified	0.00015	feet	0.1
60	Pipe	Yes	120	inches	8.329	inches	Unspecified	0.00015	feet	3.17
61	Pipe	Yes	91	inches	6.065	inches	Unspecified	0.00015	feet	1.35
62	Pipe	Yes	191.5	inches	6.065	inches	Unspecified	0.00015	feet	0.2
63	Pipe	Yes	46.75	inches	5.047	inches	Unspecified	0.00015	feet	0.74
64	Pipe	Yes	24	inches	5.047	inches	Unspecified	0.00015	feet	4.0314166E-02
65	Pipe	Yes	18	inches	10.42	inches	Unspecified	0.00015	feet	1.514091
66	Pipe	Yes	152	inches	6.065	inches	Unspecified	0.00015	feet	0.3703681
67	Pipe	Yes	24	inches	6.065	inches	Unspecified	0.00015	feet	0.45909
68	Pipe	Yes	41	inches	6.065	inches	Unspecified	0.00015	feet	0.64
69	Pipe	Yes	15	inches	8.329	inches	Unspecified	0.00015	feet	0.22
70	8" Sch 10	Yes	527	inches	8.329	inches	Unspecified	0.00015	feet	2.3
80	Pipe	Yes	6	inches	1.61	inches	Unspecified	0.00015	feet	0
81	Pipe	Yes	24	inches	1.61	inches	Unspecified	0.00015	feet	1
82	Pipe	Yes	18	inches	2.067	inches	Unspecified	0.00015	feet	0.47
83	Pipe	Yes	149	inches	2.067	inches	Unspecified	0.00015	feet	2.52
84	3" Sch 40	Yes	804	inches	3.068	inches	Unspecified	0.00015	feet	1.28
90	Pipe	Yes	78	inches	12.39	inches	Unspecified	0.00015	feet	2.81
91	Pipe	Yes	80	inches	12.39	inches	Unspecified	0.00015	feet	1.38
92	12" Sch 10	Yes	84	inches	12.39	inches	Unspecified	0.00015	feet	1.02
93	Pipe	Yes	6	inches	12.39	inches	Unspecified	0.00015	feet	0
94	Pipe	Yes	23	inches	12.39	inches	Unspecified	0.00015	feet	0
100	Pipe	Yes	50.5	inches	13.624	inches	Unspecified	0.00015	feet	1.97
101	Pipe	Yes	18.5	inches	13.624	inches	Unspecified	0.00015	feet	0.5
102	Pipe	Yes	8	inches	13.624	inches	Unspecified	0.00015	feet	0
103	14" Sch 10	Yes	59.5	inches	13.624	inches	Unspecified	0.00015	feet	0.29
200	Pipe	Yes	20	inches	12.39	inches	Unspecified	0.00015	feet	0.79
201	Pipe	Yes	10.5	inches	6.065	inches	Unspecified	0.00015	feet	1.26
202	Pipe	Yes	6	inches	6.065	inches	Unspecified	0.00015	feet	0
203	Pipe	Yes	17	inches	6.065	inches	Unspecified	0.00015	feet	0.33
204	Pipe	Yes	62	inches	8.329	inches	Unspecified	0.00015	feet	0.81
210	Pipe	Yes	6	inches	1.61	inches	Unspecified	0.00015	feet	0
211	Pipe	Yes	20	inches	1.61	inches	Unspecified	0.00015	feet	1
212	Pipe	Yes	18	inches	2.067	inches	Unspecified	0.00015	feet	0.47
213	Pipe	Yes	181	inches	4.026	inches	Unspecified	0.00015	feet	0.9
214	Pipe	Yes	313.5	inches	3.068	inches	Unspecified	0.00015	feet	0.02
215	Pipe	Yes	1046	inches	4.026	inches	Unspecified	0.00015	feet	0.9
625	Pipe	Yes	6	inches	15.624	inches	Unspecified	0.00015	feet	0

AFT Arrow 3.0 Input (3 of 12) 2/24/2006 01:43 PM
DMJMH+N

AFT Arrow Model Main OGTS Case 4 (115°F, Heat Transfer, Dirty Filters, Backdraft Damper)

Pipe	Name	Pipe Defined	Length	Length Units	Hydraulic Diameter	Hydraulic Diam. Units	Friction Data Set	Roughness	Roughness Units	Losses (K)
631	Pipe	Yes	6	inches	15.624	inches	Unspecified	0.00015	feet	0
636	Pipe	Yes	6	inches	23.5	inches	Unspecified	0.00015	feet	0
637	Pipe	Yes	1	feet	6.065	inches	Unspecified	0.00015	feet	0
638	Pipe	Yes	12	inches	6.065	inches	Unspecified	0.00015	feet	0

Pipe	Initial Flow	Initial Flow Units	Junctions (Up,Down)	Geometry	Material	Size	Type	Thermal Boundary
1			1, 2	Cylindrical Pipe	Stainless Steel	6 inch	schedule 40	General Heat Transfer
2			2, 3	Cylindrical Pipe	Stainless Steel	6 inch	schedule 40	General Heat Transfer
3			3, 4	Cylindrical Pipe	Stainless Steel	4 inch	schedule 40	General Heat Transfer
4			4, 5	Cylindrical Pipe	Stainless Steel	6 inch	schedule 40	General Heat Transfer
5			5, 6	Cylindrical Pipe	Stainless Steel	4 inch	schedule 40	General Heat Transfer
6			6, 7	Cylindrical Pipe	Stainless Steel	6 inch	schedule 40	General Heat Transfer
7			7, 8	Cylindrical Pipe	Stainless Steel	5 inch	schedule 40	General Heat Transfer
8			8, 9	Cylindrical Pipe	Stainless Steel	6 inch	schedule 40	General Heat Transfer
9			9, 55	Cylindrical Pipe	Stainless Steel	6 inch	schedule 40	General Heat Transfer
16			16, 17	Cylindrical Pipe	Stainless Steel	16 inch	schedule 10	General Heat Transfer
17			17, 18	Cylindrical Pipe	Stainless Steel	16 inch	schedule 10	General Heat Transfer
18			18, 19	Cylindrical Pipe	Stainless Steel	16 inch	schedule 10	General Heat Transfer
19			19, 20	Cylindrical Pipe	Stainless Steel	16 inch	schedule 10	General Heat Transfer
20			20, 21	Cylindrical Pipe	Stainless Steel	16 inch	schedule 10	General Heat Transfer
21			21, 22	Cylindrical Pipe	Stainless Steel	16 inch	schedule 10	General Heat Transfer
22			22, 23	Cylindrical Pipe	Stainless Steel	16 inch	schedule 10	General Heat Transfer
23			23, 24	Cylindrical Pipe	Stainless Steel	16 inch	schedule 10	General Heat Transfer
24			24, 25	Cylindrical Pipe	Stainless Steel	16 inch	schedule 10	General Heat Transfer
25			25, 26	Cylindrical Pipe	Stainless Steel	16 inch	schedule 10	General Heat Transfer
26			26, 27	Cylindrical Pipe	Stainless Steel	16 inch	schedule 10	General Heat Transfer
27			27, 29	Cylindrical Pipe	Stainless Steel	16 inch	schedule 10	General Heat Transfer
28			29, 28	Cylindrical Pipe	Stainless Steel	16 inch	schedule 10	General Heat Transfer
29			28, 30	Cylindrical Pipe	Stainless Steel	16 inch	schedule 10	General Heat Transfer
30			30, 31	Cylindrical Pipe	Stainless Steel	16 inch	schedule 10	General Heat Transfer
31			31, 32	Cylindrical Pipe	Stainless Steel	16 inch	schedule 10	General Heat Transfer
32			32, 33	Cylindrical Pipe	Stainless Steel	16 inch	schedule 10	General Heat Transfer
33			33, 34	Cylindrical Pipe	Stainless Steel	20 inch	schedule 10	General Heat Transfer
35			34, 36	Cylindrical Pipe	Stainless Steel	24 inch	schedule 10	General Heat Transfer
36			36, 37	Cylindrical Pipe	Stainless Steel	24 inch	schedule 10	General Heat Transfer
37			37, 38	Cylindrical Pipe	Stainless Steel	24 inch	schedule 10	General Heat Transfer
38			38, 39	Cylindrical Pipe	Stainless Steel	24 inch	schedule 10	General Heat Transfer
39			39, 40	Cylindrical Pipe	Stainless Steel	18 inch	schedule 10	General Heat Transfer
40			40, 41	Cylindrical Pipe	Stainless Steel	20 inch	schedule 10	General Heat Transfer
41			41, 42	Cylindrical Pipe	Stainless Steel	20 inch	schedule 10	General Heat Transfer
42			42, 43	Cylindrical Pipe	Stainless Steel	20 inch	schedule 10	General Heat Transfer
43			43, 44	Cylindrical Pipe	Unspecified			General Heat Transfer
50			50, 51	Cylindrical Pipe	Stainless Steel	4 inch	schedule 40	General Heat Transfer
51			51, 52	Cylindrical Pipe	Stainless Steel	4 inch	schedule 40	General Heat Transfer
52			52, 53	Cylindrical Pipe	Stainless Steel	4 inch	schedule 40	General Heat Transfer
53			53, 54	Cylindrical Pipe	Stainless Steel	4 inch	schedule 40	General Heat Transfer
54			54, 55	Cylindrical Pipe	Stainless Steel	4 inch	schedule 40	General Heat Transfer
55			55, 64	Cylindrical Pipe	Stainless Steel	5 inch	schedule 40	General Heat Transfer
60			60, 61	Cylindrical Pipe	Stainless Steel	8 inch	schedule 10	General Heat Transfer
61			61, 62	Cylindrical Pipe	Stainless Steel	6 inch	schedule 40	General Heat Transfer
62			62, 63	Cylindrical Pipe	Stainless Steel	6 inch	schedule 40	General Heat Transfer
63			63, 64	Cylindrical Pipe	Stainless Steel	5 inch	schedule 40	General Heat Transfer
64			64, 65	Cylindrical Pipe	Stainless Steel	5 inch	schedule 40	General Heat Transfer
65			65, 66	Cylindrical Pipe	Stainless Steel	10 inch	schedule 10	General Heat Transfer
66			66, 67	Cylindrical Pipe	Stainless Steel	6 inch	schedule 40	General Heat Transfer

AFT Arrow 3.0 Input (4 of 12) 2/24/2006 01:43 PM
DMJMH+N

AFT Arrow Model Main OGTS Case 4 (115°F, Heat Transfer, Dirty Filters, Backdraft Damper)

Pipe	Initial Flow	Initial Flow Units	Junctions (Up,Down)	Geometry	Material	Size	Type	Thermal Boundary
67			67, 68	Cylindrical Pipe	Stainless Steel	6 inch	schedule 40	General Heat Transfer
68			68, 69	Cylindrical Pipe	Stainless Steel	6 inch	schedule 40	General Heat Transfer
69			69, 70	Cylindrical Pipe	Stainless Steel	8 inch	schedule 10	General Heat Transfer
70			70, 16	Cylindrical Pipe	Stainless Steel	8 inch	schedule 10	General Heat Transfer
80			80, 81	Cylindrical Pipe	Stainless Steel	1-1/2 inch	schedule 40	General Heat Transfer
81			81, 82	Cylindrical Pipe	Stainless Steel	1-1/2 inch	schedule 40	General Heat Transfer
82			82, 83	Cylindrical Pipe	Stainless Steel	2 inch	schedule 40	General Heat Transfer
83			83, 84	Cylindrical Pipe	Stainless Steel	2 inch	schedule 40	General Heat Transfer
84			84, 94	Cylindrical Pipe	Stainless Steel	3 inch	schedule 40	General Heat Transfer
90			90, 91	Cylindrical Pipe	Stainless Steel	12 inch	schedule 10	General Heat Transfer
91			91, 92	Cylindrical Pipe	Stainless Steel	12 inch	schedule 10	General Heat Transfer
92			92, 93	Cylindrical Pipe	Stainless Steel	12 inch	schedule 10	General Heat Transfer
93			93, 94	Cylindrical Pipe	Stainless Steel	12 inch	schedule 10	General Heat Transfer
94			94, 16	Cylindrical Pipe	Stainless Steel	12 inch	schedule 10	General Heat Transfer
100			100, 101	Cylindrical Pipe	Stainless Steel	14 inch	schedule 10	General Heat Transfer
101			101, 103	Cylindrical Pipe	Stainless Steel	14 inch	schedule 10	General Heat Transfer
102			103, 102	Cylindrical Pipe	Stainless Steel	14 inch	schedule 10	General Heat Transfer
103			102, 33	Cylindrical Pipe	Stainless Steel	14 inch	schedule 10	General Heat Transfer
200			200, 201	Cylindrical Pipe	Stainless Steel	12 inch	schedule 10	General Heat Transfer
201			201, 202	Cylindrical Pipe	Stainless Steel	6 inch	schedule 40	General Heat Transfer
202			202, 203	Cylindrical Pipe	Stainless Steel	6 inch	schedule 40	General Heat Transfer
203			203, 204	Cylindrical Pipe	Stainless Steel	6 inch	schedule 40	General Heat Transfer
204			204, 21	Cylindrical Pipe	Stainless Steel	8 inch	schedule 10	General Heat Transfer
210			210, 211	Cylindrical Pipe	Stainless Steel	1-1/2 inch	schedule 40	General Heat Transfer
211			211, 212	Cylindrical Pipe	Stainless Steel	1-1/2 inch	schedule 40	General Heat Transfer
212			212, 213	Cylindrical Pipe	Stainless Steel	2 inch	schedule 40	General Heat Transfer
213			213, 214	Cylindrical Pipe	Stainless Steel	4 inch	schedule 40	General Heat Transfer
214			214, 215	Cylindrical Pipe	Stainless Steel	3 inch	schedule 40	General Heat Transfer
215			215, 204	Cylindrical Pipe	Stainless Steel	4 inch	schedule 40	General Heat Transfer
625			625, 25	Cylindrical Pipe	Stainless Steel	16 inch	schedule 10	General Heat Transfer
631			631, 31	Cylindrical Pipe	Stainless Steel	16 inch	schedule 10	General Heat Transfer
636			636, 36	Cylindrical Pipe	Stainless Steel	24 inch	schedule 10	General Heat Transfer
637			637, 93	Cylindrical Pipe	Stainless Steel	6 inch	schedule 40	General Heat Transfer
638			638, 203	Cylindrical Pipe	Stainless Steel	6 inch	schedule 40	General Heat Transfer

Pipe	Ambient Temp.	Ambient Temp. Units	Special Condition
1	115	deg. F	None
2	115	deg. F	None
3	115	deg. F	None
4	115	deg. F	None
5	115	deg. F	None
6	115	deg. F	None
7	115	deg. F	None
8	115	deg. F	None
9	115	deg. F	None
16	115	deg. F	None
17	115	deg. F	None
18	115	deg. F	None
19	115	deg. F	None
20	115	deg. F	None
21	115	deg. F	None
22	115	deg. F	None
23	115	deg. F	None
24	115	deg. F	None
25	115	deg. F	None

AFT Arrow 3.0 Input (5 of 12) 2/24/2006 01:43 PM
DMJMH+N

AFT Arrow Model Main OGTS Case 4 (115°F, Heat Transfer, Dirty Filters, Backdraft Damper)

Pipe	Ambient Temp.	Ambient Temp. Units	Special Condition
26	115	deg. F	None
27	115	deg. F	None
28	115	deg. F	None
29	115	deg. F	None
30	115	deg. F	None
31	115	deg. F	None
32	115	deg. F	None
33	115	deg. F	None
35	115	deg. F	None
36	115	deg. F	None
37	115	deg. F	None
38	115	deg. F	None
39	115	deg. F	None
40	115	deg. F	None
41	115	deg. F	None
42	115	deg. F	None
43	115	deg. F	None
50	115	deg. F	None
51	115	deg. F	None
52	115	deg. F	None
53	115	deg. F	None
54	115	deg. F	None
55	115	deg. F	None
60	115	deg. F	None
61	115	deg. F	None
62	115	deg. F	None
63	115	deg. F	None
64	115	deg. F	None
65	115	deg. F	None
66	115	deg. F	None
67	115	deg. F	None
68	115	deg. F	None
69	115	deg. F	None
70	115	deg. F	None
80	115	deg. F	None
81	115	deg. F	None
82	115	deg. F	None
83	115	deg. F	None
84	115	deg. F	None
90	115	deg. F	None
91	115	deg. F	None
92	115	deg. F	None
93	115	deg. F	None
94	115	deg. F	None
100	115	deg. F	None
101	115	deg. F	None
102	115	deg. F	None
103	115	deg. F	None
200	115	deg. F	None
201	115	deg. F	None
202	115	deg. F	None
203	115	deg. F	None
204	115	deg. F	Closed
210	115	deg. F	None
211	115	deg. F	None

AFT Arrow 3.0 Input (6 of 12) 2/24/2006 01:43 PM
DMJMH+N

AFT Arrow Model Main OGTS Case 4 (115°F, Heat Transfer, Dirty Filters, Backdraft Damper)

Pipe	Ambient Temp.	Ambient Temp. Units	Special Condition
212	115	deg. F	None
213	115	deg. F	None
214	115	deg. F	None
215	115	deg. F	Closed
625	115	deg. F	None
631	115	deg. F	None
636	115	deg. F	None
637	115	deg. F	None
638	115	deg. F	Closed

Pipe Loss Table

Pipe Losses	K Total	Standard Bends	Mitre Bends	Smooth Bends	Angle Valves	Ball Valves	Butterfly Valves	Cylinder Valves	Gate Valves	Globe Valves	Plug Valves	Poppet Valves
64	0.04											
65	1.51											
66	0.37											
67	0.46			2 (0.42)								

Pipe Losses	Three-way Valves	Swing Check Valves	Lift Check Valves	Tilting Disc Check Valves	Stop Check Valves	Sharp-edged Orifice	Long Orifice	Contractions	Expansions
64									1 (0.0)
65									1 (1.51)
66								1 (0.13)	
67									

Pipe Losses	Entrances	Exits	Differential Flowmeter	Honeycomb	Screen	Tee	Add'l Loss
64						1 (0.04)	
65							
66							(0.24)
67						1 (0.04)	

Area Change Table

Area Change	Name	Object Defined	Elevation	Elevation Units	Initial Pressure	Initial Pressure Units	Database Source	Type	Geometry
3	Area Change	Yes	0	feet				Conical	Contraction
4	Area Change	Yes	0	feet				Conical	Expansion
5	Area Change	Yes	0	feet				Conical	Contraction
7	Area Change	Yes	0	feet				Conical	Contraction
39	Area Change	Yes	0	feet				Conical	Contraction
63	Area Change	Yes	0	feet				Conical	Contraction
82	Area Change	Yes	0	feet				Conical	Expansion
84	Area Change	Yes	0	feet				Conical	Expansion
212	Area Change	Yes	0	feet				Conical	Expansion
214	Area Change	Yes	0	feet				Conical	Contraction
215	Area Change	Yes	0	feet				Conical	Expansion

Area Change	Angle	Loss Factor
3	22.	0.439751
4	22.	0.1552215
5	22.	0.439751
7	11.	4.917351E-02
39	17.	0.1635637
63	11.	4.917351E-02
82	9.	3.155545E-02

AFT Arrow 3.0 Input (7 of 12) 2/24/2008 01:43 PM
DMJMH+N

AFT Arrow Model Main OGTS Case 4 (115°F, Heat Transfer, Dirty Filters, Backdraft Damper)

Area Change	Angle	Loss Factor
84	18.	0.1212923
212	9.	3.155545E-02
214	18.	0.1555985
215	14.	5.570398E-02

Assigned Flow Table

Assigned Flow	Name	Object Defined	Elevation	Elevation Units	Initial Pressure	Initial Pressure Units	Database Source	Special Condition
637	Waste Feed Blower	Yes	0	feet				None
638	Assigned Flow Vac Pump	Yes	0	feet				None

Assigned Flow	Type	Flow	Flow Units	Loss Factor
637	Inflow	2682	lbm/hr	0
638	Inflow	42	lbm/hr	0

Assigned Pressure Table

Assigned Pressure	Name	Object Defined	Elevation	Elevation Units	Initial Pressure	Initial Pressure Units	Database Source	Pressure
1	Assigned Pressure	Yes	0	feet	14.30	psia		14.3
44	Assigned Pressure	Yes	0	feet	14.30	psia		14.3
50	Assigned Pressure	Yes	0	feet	14.30	psia		14.3
60	Assigned Pressure	Yes	0	feet	14.30	psia		14.3
80	Assigned Pressure	Yes	0	feet	14.30	psia		14.3
90	Assigned Pressure	Yes	0	feet	14.30	psia		14.3
100	Assigned Pressure	Yes	0	feet	14.30	psia		14.3
200	Assigned Pressure	Yes	0	feet	14.30	psia		14.3
210	Assigned Pressure	Yes	0	feet	14.30	psia		14.3

Assigned Pressure	Pressure Units	Pressure Type	Temperature	Temperature Units	Balance Energy	Balance Concentration	K Factor	(Pipe #1) K In, K Out
1	psia	Stagnation	115	deg. F	No	No	0	(P1) 0, 0
44	psia	Stagnation	115	deg. F	No	No	0	(P43) 0, 0
50	psia	Stagnation	115	deg. F	No	No	0	(P50) 0, 0
60	psia	Stagnation	115	deg. F	No	No	0	(P60) 0, 0
80	psia	Stagnation	115	deg. F	No	No	0	(P80) 0, 0
90	psia	Stagnation	115	deg. F	No	No	0	(P90) 0, 0
100	psia	Stagnation	115	deg. F	No	No	0	(P100) 0, 0
200	psia	Stagnation	115	deg. F	No	No	0	(P200) 0, 0
210	psia	Stagnation	115	deg. F	No	No	0	(P210) 0, 0

Assigned Pressure	(Pipe #2) K In, K Out	(Pipe #3) K In, K Out	(Pipe #4) K In, K Out	(Pipe #5) K In, K Out	(Pipe #6) K In, K Out	(Pipe #7) K In, K Out	(Pipe #8) K In, K Out	(Pipe #9) K In, K Out
1								
44								
50								
60								
80								
90								
100								
200								
210								

Assigned Pressure	(Pipe #10) K In, K Out	(Pipe #11) K In, K Out	(Pipe #12) K In, K Out	(Pipe #13) K In, K Out	(Pipe #14) K In, K Out	(Pipe #15) K In, K Out	(Pipe #16) K In, K Out	(Pipe #17) K In, K Out
1								

AFT Arrow 3.0 Input (8 of 12) 2/24/2006 01:43 PM
DMJMH+N

AFT Arrow Model Main OGTS Case 4 (115°F, Heat Transfer, Dirty Filters, Backdraft Damper)

Assigned Pressure	(Pipe #10) K In, K Out	(Pipe #11) K In, K Out	(Pipe #12) K In, K Out	(Pipe #13) K In, K Out	(Pipe #14) K In, K Out	(Pipe #15) K In, K Out	(Pipe #16) K In, K Out	(Pipe #17) K In, K Out
44								
50								
60								
80								
90								
100								
200								
210								

Assigned Pressure	(Pipe #18) K In, K Out	(Pipe #19) K In, K Out	(Pipe #20) K In, K Out	(Pipe #21) K In, K Out	(Pipe #22) K In, K Out	(Pipe #23) K In, K Out	(Pipe #24) K In, K Out	(Pipe #25) K In, K Out
1								
44								
50								
60								
80								
90								
100								
200								
210								

Branch Table

Branch	Name	Object Defined	Elevation	Elevation Units	Initial Pressure	Initial Pressure Units	Database Source	Special Condition	Boundary Flow (+ = in/- = out)
43	Branch	Yes	0	feet				None	

Branch	Boundary Flow Units	(Pipe #1) K In, K Out	(Pipe #2) K In, K Out	(Pipe #3) K In, K Out	(Pipe #4) K In, K Out	(Pipe #5) K In, K Out	(Pipe #6) K In, K Out	(Pipe #7) K In, K Out	(Pipe #8) K In, K Out
43		(P42) 0, 1	(P43) 0, 0						

Branch	(Pipe #9) K In, K Out	(Pipe #10) K In, K Out	(Pipe #11) K In, K Out	(Pipe #12) K In, K Out	(Pipe #13) K In, K Out	(Pipe #14) K In, K Out	(Pipe #15) K In, K Out	(Pipe #16) K In, K Out	(Pipe #17) K In, K Out
43									

Branch	(Pipe #18) K In, K Out	(Pipe #19) K In, K Out	(Pipe #20) K In, K Out	(Pipe #21) K In, K Out	(Pipe #22) K In, K Out	(Pipe #23) K In, K Out	(Pipe #24) K In, K Out	(Pipe #25) K In, K Out
43								

Compressor/Fan Table

Compressor/Fan	Name	Object Defined	Elevation	Elevation Units	Initial Pressure	Initial Pressure Units	Database Source	Special Condition
40	Fan N31-025	Yes	0	feet				None

Compressor/Fan	Pump Type	Design Flow Rate	Design Flow Rate Units	Current Configuration	Independent Variable	Ind. Variable Units	Dependent Variable
40	Comp./Fan Curve				Vol. Flow Rate	ft3/min	Pressure Loss

Compressor/Fan	Dep. Variable Units	Comp./Fan Curve Constant a	Comp./Fan Curve Constant b	Comp./Fan Curve Constant c	Comp./Fan Curve Constant d	Comp./Fan Curve Constant e
40	in. H2O std.	114.7023	4.038226E-03	-3.200603E-07	0	0

Compressor/Fan	Runout Flow Rate	Runout Flow Rate Units	Added Press. Type	Speed	Control Discharge	Control Discharge Units	Control When Exceeded Only	Compression Process
40			Static	100	24224	lbm/hr	No	Adiabatic

Control Valve Table

AFT Arrow 3.0 Input (9 of 12) 2/24/2006 01:43 PM
DMJMH+N

AFT Arrow Model Main OGTS Case 4 (115°F, Heat Transfer, Dirty Filters, Backdraft Damper)

Control Valve	Name	Object Defined	Elevation	Elevation Units	Initial Pressure	Initial Pressure Units	Database Source	Special Condition	Valve Type	Control Setting
92	FV-016	Yes	0	feet				None	FCV	8320
102	HV-504	Yes	0	feet				None	FCV	10723

Control Valve	Control Units	Pressure/ Head Type	Close Type	Full Open Loss Type	Full Open Loss	Full Open Xt
92	lbm/hr	N/A	Fail Open	None		
102	lbm/hr	N/A	Open (Close on Reverse Flow)	Cv	8300	Cv

Dead End Table

Dead End	Name	Object Defined	Elevation	Elevation Units	Initial Pressure	Initial Pressure Units	Database Source
625	Backup HEPA/HEGA Isolated	Yes	0	feet			
631	Backup HEPA/HEGA Isolated	Yes	0	feet			
636	Redundant Fan Isolated	Yes	0	feet			

General Component Table

General Component	Name	Object Defined	Elevation	Elevation Units	Initial Pressure	Initial Pressure Units	Database Source
2	ICV Filter N02-010	Yes	0	feet			
19	Packed Tower	Yes	0	feet			
20	Venturi/Demister	Yes	0	feet			
22	Condenser Demister	Yes	0	feet			
27	HEPA	Yes	0	feet			
29	HEGA	Yes	0	feet			
51	AWTE Filter N22-026	Yes	0	feet			
53	AWTE	Yes	0	feet			
61	SMF Dilution Filter N02-049	Yes	0	feet			
66	SMF N02-019	Yes	0	feet			
69	SMF N02-020	Yes	0	feet			
81	WRS Tank Filter	Yes	0	feet			
91	WSS Filter N02-101/102	Yes	0	feet			
101	SCR Filter N02-022	Yes	0	feet			
201	WSS Filter N02-093	Yes	0	feet			
211	SWS Tank Filter N02-014A	Yes	0	feet			

General Component	Special Condition	Loss Model	Loss Value	Independent Variable	Ind. Variable Units	Dependent Variable	Dep. Variable Units
2	None	General Polynomial	Variable	Vol. Flow Rate	ft3/min	Pressure Loss	in. H2O std.
19	None	General Polynomial	Variable	Vol. Flow Rate	ft3/min	Pressure Loss	in. H2O std.
20	None	General Polynomial	Variable	Vol. Flow Rate	ft3/min	Pressure Loss	in. H2O std.
22	None	General Polynomial	Variable	Vol. Flow Rate	ft3/min	Pressure Loss	in. H2O std.
27	None	General Polynomial	Variable	Vol. Flow Rate	ft3/min	Pressure Loss	in. H2O std.
29	None	General Polynomial	Variable	Vol. Flow Rate	ft3/min	Pressure Loss	in. H2O std.
51	None	General Polynomial	Variable	Vol. Flow Rate	ft3/min	Pressure Loss	in. H2O std.
53	None	K Constant	1.5				
61	None	General Polynomial	Variable	Vol. Flow Rate	ft3/min	Pressure Loss	in. H2O std.
66	None	General Polynomial	Variable	Vol. Flow Rate	ft3/min	Pressure Loss	in. H2O std.
69	None	General Polynomial	Variable	Vol. Flow Rate	ft3/min	Pressure Loss	in. H2O std.
81	None	General Polynomial	Variable	Vol. Flow Rate	ft3/min	Pressure Loss	in. H2O std.
91	None	General Polynomial	Variable	Vol. Flow Rate	ft3/min	Pressure Loss	in. H2O std.
101	None	General Polynomial	Variable	Vol. Flow Rate	ft3/min	Pressure Loss	in. H2O std.
201	None	General Polynomial	Variable	Vol. Flow Rate	ft3/min	Pressure Loss	in. H2O std.
211	None	General Polynomial	Variable	Vol. Flow Rate	ft3/min	Pressure Loss	in. H2O std.

AFT Arrow 3.0 Input (10 of 12) 2/24/2006 01:43 PM
DMJMH+N

AFT Arrow Model Main OGTS Case 4 (115°F, Heat Transfer, Dirty Filters, Backdraft Damper)

General Component	Loss Constant a	Loss Constant b	Loss Constant c	Loss Constant d	Loss Constant e
2	-2.331035E-17	0.00448	0	0	0
19	-1.168011E-15	3.346839E-18	3.901916E-07	0	0
20	-1.340247E-14	2.646809E-17	3.506383E-06	0	0
22	2.862294E-17	2.179133E-03	0	0	0
27	-6.201636E-17	1.458553E-03	0	0	0
29	-3.75134E-17	8.729822E-04	0	0	0
51	-2.959872E-17	0.01136	0	0	0
53					
61	-1.165517E-17	0.00112	0	0	0
66	-6.657001E-17	0.0064	0	0	0
69	-6.657001E-17	0.0064	0	0	0
81	-3.610393E-17	0.0325	0	0	0
91	-2.331035E-17	0.00224	0	0	0
101	-1.458252E-17	0.00035	0	0	0
201	-1.165517E-17	0.0056	0	0	0
211	-3.610393E-17	0.0325	0	0	0

Heat Exchanger Table

Heat Exchanger	Name	Object Defined	Elevation	Elevation Units	Initial Pressure	Initial Pressure Units	Database Source	Special Condition	Type
6	ICV	Yes	0	feet				None	
23	WSS Heater	Yes	0	feet				None	
34	SCR	Yes	0	feet				None	

Heat Exchanger	Loss Model	Loss Value	Independent Variable	Ind. Variable Units	Dependent Variable	Dep. Variable Units	Loss Constant a
6	K Constant	1.5					
23	General Polynomial	Variable	Vol. Flow Rate	ft3/min	Pressure Loss	in. H2O std.	-2.633527E-16
34	General Polynomial	Variable	Vol. Flow Rate	ft3/min	Pressure Loss	in. H2O std.	-1.041701E-15

Heat Exchanger	Loss Constant b	Loss Constant c	Loss Constant d	Loss Constant e
6				
23	5.437952E-19	1.75338E-07	0	0
34	2.600104E-03	0	0	0

Tee or Wye Table

Tee or Wye	Name	Object Defined	Elevation	Elevation Units	Initial Pressure	Initial Pressure Units	Database Source	Tee/Wye Type	Loss Type
16	Tee or Wye	Yes	0	feet				Round Straight	Detailed
21	Tee or Wye	Yes	0	feet				Round Straight	Detailed
25	Tee or Wye	Yes	0	feet				Round Straight	Detailed
31	Tee or Wye	Yes	0	feet				Round Straight	Detailed
33	Tee or Wye	Yes	0	feet				Round Straight	Detailed
36	Tee or Wye	Yes	0	feet				Round Straight	Detailed
55	Tee or Wye	Yes	0	feet				Round Straight	Detailed
64	Tee or Wye	Yes	0	feet				Round Straight	Detailed
93	Tee or Wye	Yes	0	feet				Round Straight	Detailed
94	Tee or Wye	Yes	0	feet				Round Straight	Detailed
203	Tee or Wye	Yes	0	feet				Round Straight	Detailed
204	Tee or Wye	Yes	0	feet				Round Straight	Detailed

Tee or Wye	Angle	Pipes A, B, C
16	30	
21	90	

AFT Arrow 3.0 Input (11 of 12) 2/24/2006 01:43 PM
DMJMH+N

AFT Arrow Model Main OGTS Case 4 (115°F, Heat Transfer, Dirty Filters, Backdraft Damper)

Tee or Wye	Angle	Pipes A, B, C
25	135	
31	45	
33	45	
36	145	
55	45	
64	45	
93	30	
94	30	
203	45	
204	45	

Valve Table

Valve	Name	Object Defined	Elevation	Elevation Units	Initial Pressure	Initial Pressure Units	Database Source	Special Condition	Exit Valve
8	HV-114	Yes	0	feet				None	No
9	HV-115	Yes	0	feet				None	No
17	36-V-049	Yes	0	feet				None	No
18	HV-125	Yes	0	feet				None	No
24	WSS Valve V-072	Yes	0	feet				None	No
26	HV-313	Yes	0	feet				None	No
28	36-V-014	Yes	0	feet				None	No
30	HV-314	Yes	0	feet				None	No
32	36-V-017	Yes	0	feet				None	No
37	36-V-074	Yes	0	feet				None	No
38	36-V-024	Yes	0	feet				None	No
41	36-V-080	Yes	0	feet				None	No
42	36-N25-156	Yes	0	feet				None	No
52	HV-111	Yes	0	feet				None	No
54	HV-113	Yes	0	feet				None	No
62	TV-014	Yes	0	feet				Closed	No
65	HV-002	Yes	0	feet				None	No
67	HV-003	Yes	0	feet				None	No
68	HV-004	Yes	0	feet				None	No
70	HV-005	Yes	0	feet				None	No
83	32-V-003	Yes	0	feet			Ball PO=100 (C)	Closed	No
103	36-V-019	Yes	0	feet				None	No
202	FV-331	Yes	0	feet				Closed	No
213	37-V-004	Yes	0	feet			Ball PO=100 (C)	Closed	No

Valve	Exit Pressure	Exit Pressure Units	CdA	CdA Units	Loss Model	Loss Value	Independent Variable	Ind. Variable Units	Dependent Variable
8					Cv Constant	1194			
9					Cv Constant	1194			
17					Cv Constant	10040			
18					Cv Constant	10040			
24					Cv Constant	10040			
26					Cv Constant	10040			
28					K Constant	0.19			
30					K Constant	0.19			
32					Cv Constant	10040			
37					Cv Constant	21660			
38					Cv Constant	21660			
41					Cv Constant	15430			
42					General Polynomial	Variable	Velocity	feet/min	Pressure Loss
52					Cv Constant	425			

AFT Arrow 3.0 Input (12 of 12) 2/24/2006 01:43 PM
DMJMH+N

AFT Arrow Model Main OGTS Case 4 (115°F, Heat Transfer, Dirty Filters, Backdraft Damper)

Valve	Exit Pressure	Exit Pressure Units	CdA	CdA Units	Loss Model	Loss Value	Independent Variable	Ind. Variable Units	Dependent Variable
54					Cv Constant	425			
62					Cv Constant	80			
65					Cv Constant	1194			
67					Cv Constant	1194			
68					Cv Constant	1194			
70					Cv Constant	1194			
83					K Constant	0.056598			
103					Cv Constant	8300			
202					Cv Constant	35			
213					K Constant	0.056598			

Valve	Dep. Variable Units	Loss Constant a	Loss Constant b	Loss Constant c	Loss Constant d	Loss Constant e
8						
9						
17						
18						
24						
26						
28						
30						
32						
37						
38						
41						
42	in. H2O std.	0.1299999	-1.385713E-04	2.714285E-07	0	0
52						
54						
62						
65						
67						
68						
70						
83						
103						
202						
213						

Title: AFT Arrow Model Main OGTS Case 4 (115°F, Heat Transfer, Dirty Filters, Backdraft Damper)
Analysis run on: 2/24/2006 12:27:17 PM
Application version: AFT Arrow Version 3.0 (2005.09.14)
Input File: C:\AFT Products\AFT Arrow\DBVS-OGTS-R2 Case 3.aro

Execution Time= 9.39 seconds
Total Number Of Pressure Iterations= 149
Total Number Of Flow Iterations= 29
Total Number Of Enthalpy Iterations= 29
Number Of Pipes= 83
Number Of Junctions= 84
Matrix Method= Gaussian Elimination

Length March Solution Method with Mach Number Limits
Segments Per Pipe= 2
Mach Number Increment= 0.01
Pressure Tolerance= 0.0001 relative change
Mass Flow Rate Tolerance= 0.0001 relative change
Enthalpy Tolerance= 0.0001 relative change
Flow Relaxation= (Automatic)
Pressure Relaxation= (Automatic)
Resistance Relaxation= (Automatic)

Fluid Database: AFT Standard
Fluid: Air
Max Fluid Temperature Data= 1000 deg. K
Min Fluid Temperature Data= 200 deg. K
Molecular Weight =28.97 amu
Gas Constant =0.06855 Btu/lbm-R
Critical Pressure =37.25 atm
Critical Temperature =132.41 deg. K
Acentric Factor =0.021
Equation of State= Redlich-Kwong
Enthalpy Model= Generalized
Specific Heat Ratio Accuracy = High
Atmospheric Pressure= 14.3 psia
Gravitational Acceleration= 1 g
Standard Pressure= 14.696 psia
Standard Temperature= 60 deg. F
Turbulent Flow Above Reynolds Number= 4000
Laminar Flow Below Reynolds Number= 2300
Total Inflow= 6.729 lbm/sec
Total Outflow= 6.729 lbm/sec
Total Energy Inflow= 1,952 Btu/s
Total Energy Outflow= 1,774 Btu/s
Total Heat Transferred Into System= -178.1 Btu/s
Maximum Pressure is 15.09 psia at Junction 213 Outlet
Minimum Pressure is 8.240 psia at Junction 36 Inlet
Maximum Static Temperature is 875.0 deg. F at Junction 6 Outlet
Minimum Static Temperature is 70.00 deg. F at Junction 204 Inlet

Compressor/Fan Summary

Jct	Name	Mass Flow (lbm/hr)	Vol. Flow (ft3/min)	DP Stag. (in. H2O std.)	DP Static (in. H2O std.)	Overall Efficiency (Percent)	Speed (Percent)	Overall Power (hp)	Comp. Ratio (Percent)	BEP Q (ft3/sec)
40	Fan N31-025	24,224	12,038	152.1	152.8	67.00	117.9	358.0	160.8	N/A

Jct	BEP Mass (lbm/sec)	% of BEP (Percent)
40	N/A	N/A

Valve Summary

AFT Arrow 3.0 Output (2 of 13) 2/24/2006
DMJMH+N

AFT Arrow Model Main OGTS Case 4 (115°F, Heat Transfer, Dirty Filters, Backdraft Damper)

Jct	Name	Valve Type	Mass Flow (lbm/sec)	DP Stag (in. H2O std.)	DP Static (in. H2O std.)	P Static Inlet (psia)	K	Valve State	Cv
8	HV-114	REGULAR	0.4027	0.7327	0.3216	14.004	0.9274	Open	1,194.00
9	HV-115	REGULAR	0.4027	0.3254	0.3257	13.992	0.8598	Open	1,194.00
17	36-V-049	REGULAR	3.7503	0.2358	0.2361	13.171	0.5800	Open	10,040.00
18	HV-125	REGULAR	3.7503	0.2344	0.2347	13.162	0.5782	Open	10,040.00
24	WSS Valve V-072	REGULAR	3.7503	0.3064	0.3069	10.428	0.5772	Open	10,040.00
26	HV-313	REGULAR	3.7503	0.3036	0.3041	10.407	0.5741	Open	10,040.00
28	36-V-014	REGULAR	3.7503	0.1065	0.1067	9.956	0.1900	Open	N/A
30	HV-314	REGULAR	3.7503	0.1065	0.1067	9.952	0.1900	Open	N/A
32	36-V-017	REGULAR	3.7503	0.3136	0.3142	9.944	0.5714	Open	10,040.00
37	36-V-074	REGULAR	6.7289	0.2636	0.2641	9.043	0.6143	Open	21,660.00
38	36-V-024	REGULAR	6.7289	0.2614	0.2619	9.033	0.6116	Open	21,660.00
41	36-V-080	REGULAR	6.7289	0.4240	0.4247	14.484	0.6065	Open	15,430.00
42	36-N25-156	REGULAR	6.7289	4.6265	4.6346	14.469	6.6527	Open	N/A
52	HV-111	REGULAR	0.2914	0.6408	0.6416	14.092	1.3082	Open	425.00
54	HV-113	REGULAR	0.2914	0.6438	0.6446	14.019	1.3079	Open	425.00
X62	TV-014	REGULAR	0.0000	N/A	N/A	14.300	N/A	Closed By User	80.00
65	HV-002	REGULAR	0.6942	2.4484	0.7362	13.880	1.3537	Open	1,194.00
67	HV-003	REGULAR	0.6942	0.7319	0.7336	13.562	0.8595	Open	1,194.00
68	HV-004	REGULAR	0.6942	0.7296	0.7313	13.519	0.8592	Open	1,194.00
70	HV-005	REGULAR	0.6942	1.1286	1.1294	13.262	4.6969	Open	1,194.00
X83	32-V-003	REGULAR	0.0000	N/A	N/A	14.300	N/A	Closed By User	N/A
92	FV-016	FCV	2.3111	24.3750	24.3980	14.066	70.8007	Open	N/A
102	HV-504	FCV	2.9786	117.5995	117.7650	14.210	303.7209	Open	8,300.00
103	36-V-019	REGULAR	2.9786	0.1931	0.1933	14.217	0.4990	Open	8,300.00
X202	FV-331	REGULAR	0.0000	N/A	N/A	14.300	N/A	Closed By User	35.00
X213	37-V-004	REGULAR	0.0000	N/A	N/A	14.300	N/A	Closed By User	N/A

Jct	Cv Est.
8	N/A
9	N/A
17	N/A
18	N/A
24	N/A
26	N/A
28	16,709.4
30	16,709.3
32	N/A
37	N/A
38	N/A
41	N/A
42	4,463.8
52	N/A
54	N/A
X62	N/A
65	N/A
67	N/A
68	N/A
70	N/A
X83	N/A
92	569.8
102	N/A
103	N/A
X202	N/A

AFT Arrow 3.0 Output (3 of 13) 2/24/2006
DMJMH+N

AFT Arrow Model Main OGTS Case 4 (115°F, Heat Transfer, Dirty Filters, Backdraft Damper)

Jct	Cv Est.
X213	N/A

Heat Exchanger Summary

Jct	Name	Mass Flow (lbm/sec)	DPo (psid)	DP (psid)	DT Loss (deg. F)	T Inlet (deg. F)	T Outlet (deg. F)	Heat Rate In (Btu/s)
6	ICV	0.4027	0.05077	0.03222	-759.99	114.6	874.6	75.61
23	WSS Heater	3.7503	0.14684	0.14787	-24.97	152.0	177.0	22.91
34	SCR	6.7289	0.86055	0.85133	-130.07	147.5	277.5	214.05

Pipe Output Table

Pipe	Name	Mass Flow (lbm/hr)	Vel. In (feet/sec)	Vel. Out (feet/sec)	Mach # In	Mach # Out	dP Stag. Total (in. H2O std.)	P Stag. In (in. H2O std. (g))	P Stag. Out (in. H2O std. (g))
1	Pipe	1,450	29.88	29.93	0.025520	0.025557	0.563525	0.00000	-0.563525
2	Pipe	1,450	30.05	30.06	0.025661	0.025674	0.190438	-2.17739	-2.367825
3	Pipe	1,450	68.33	68.78	0.058372	0.058753	2.543057	-2.44710	-4.990157
4	Pipe	1,450	30.28	30.28	0.025856	0.025861	0.081096	-5.13545	-5.216549
5	Pipe	1,450	68.83	68.85	0.058799	0.058815	0.100789	-5.29640	-5.397193
6	Pipe	1,450	70.69	67.86	0.039794	0.038982	0.127346	-6.80267	-6.930013
7	Pipe	1,450	98.08	91.19	0.056351	0.054331	0.440641	-6.95002	-7.390664
8	Pipe	1,450	63.22	63.03	0.037660	0.037603	0.033684	-8.12332	-8.157007
9	Pipe	1,450	63.08	61.85	0.037634	0.037267	0.135344	-8.48242	-8.617764
16	Pipe	13,501	48.55	48.52	0.040139	0.040136	0.221350	-30.63263	-30.853983
17	Pipe	13,501	48.55	48.54	0.040162	0.040159	0.011483	-31.08980	-31.101282
18	Pipe	13,501	48.57	48.57	0.040185	0.040187	0.055252	-31.33570	-31.390951
19	Pipe	13,501	49.37	49.37	0.040847	0.040854	0.097753	-37.26514	-37.362888
20	Pipe	13,501	58.25	58.25	0.048203	0.048209	0.069744	-91.90594	-91.975693
21	Pipe	13,501	58.25	58.25	0.048209	0.048215	0.063831	-91.97569	-92.039520
22	Pipe	13,501	60.27	60.27	0.049885	0.049892	0.067078	-102.17997	-102.247047
23	Pipe	13,501	63.62	63.67	0.051630	0.051679	0.328791	-106.31181	-106.640602
24	Pipe	13,501	63.74	63.74	0.051733	0.051732	0.002693	-106.94698	-106.949677
25	Pipe	13,501	63.77	63.78	0.051763	0.051774	0.091021	-107.12108	-107.212097
26	Pipe	13,501	63.85	63.84	0.051828	0.051833	0.075499	-107.51566	-107.591156
27	Pipe	13,501	65.54	65.52	0.053210	0.053212	0.085689	-115.02970	-115.115395
28	Pipe	13,501	66.61	66.61	0.054096	0.054095	0.003353	-119.68481	-119.688164
29	Pipe	13,501	66.63	66.63	0.054116	0.054114	0.003379	-119.79465	-119.798035
30	Pipe	13,501	66.65	66.64	0.054135	0.054130	0.013516	-119.90456	-119.918068
31	Pipe	13,501	66.64	66.53	0.054130	0.054095	0.097595	-119.91807	-120.015663
32	Pipe	13,501	66.61	66.63	0.054157	0.054176	0.104458	-120.32925	-120.433708
33	Pipe	24,224	73.09	73.14	0.060710	0.060770	0.352523	-120.46309	-120.815613
35	Pipe	24,224	67.35	66.35	0.050817	0.050480	0.439612	-144.63615	-145.075760
36	Pipe	24,224	66.35	66.32	0.050480	0.050469	0.005570	-145.07576	-145.081329
37	Pipe	24,224	66.39	66.37	0.050522	0.050512	0.004593	-145.34496	-145.349548
38	24" Sch 10	24,224	66.44	66.38	0.050565	0.050546	0.009635	-145.61092	-145.620544
39	EJ-604	24,224	118.39	118.43	0.090195	0.090240	0.163300	-145.69298	-145.856277
40	EJ-605	24,224	72.19	72.17	0.049994	0.050014	0.444838	6.24553	5.800692
41	EJ-605	24,224	72.25	72.22	0.050067	0.050058	0.004963	5.37671	5.371745
42	EJ-605	24,224	73.07	73.04	0.050644	0.050636	0.005016	0.74525	0.740236
43	Stack	24,224	12.14	11.24	0.008414	0.008091	0.027058	0.03690	0.009847
50	Pipe	1,049	49.10	49.33	0.041938	0.042136	1.857651	0.00000	-1.857651
51	Pipe	1,049	49.71	49.77	0.042457	0.042504	0.427785	-4.83039	-5.258180
52	Pipe	1,049	49.85	49.88	0.042574	0.042604	0.275387	-5.89897	-6.174360

AFT Arrow 3.0 Output (4 of 13) 2/24/2006
DMJMH+N

AFT Arrow Model Main OGTS Case 4 (115°F, Heat Transfer, Dirty Filters, Backdraft Damper)

Pipe	Name	Mass Flow (lbm/hr)	Vel. In (feet/sec)	Vel. Out (feet/sec)	Mach # In	Mach # Out	dP Stag. Total (in. H2O std.)	P Stag. In (in. H2O std. (g))	P Stag. Out (in. H2O std. (g))
53	Pipe	1,049	49.98	50.02	0.042685	0.042725	0.367808	-6.91119	-7.278999
54	Pipe	1,049	50.11	50.23	0.042796	0.042897	0.912221	-7.92277	-8.834996
55	Pipe	2,499	121.84	121.63	0.082561	0.082517	0.244792	-8.78339	-9.028179
60	Pipe	0	0.00	0.00	0.000000	0.000000	0.000000	0.00000	0.000000
61	Pipe	0	0.00	0.00	0.000000	0.000000	0.000000	0.00000	0.000000
62	Pipe	0	0.00	0.00	0.000000	0.000000	0.000000	-9.78085	-9.780849
63	Pipe	0	0.00	0.00	0.000000	0.000000	0.000000	-9.78085	-9.780849
64	Pipe	2,499	121.81	121.18	0.082634	0.082441	0.230088	-9.57309	-9.803182
65	Pipe	2,499	28.52	28.39	0.019390	0.019350	0.154166	-12.25163	-12.405793
66	Pipe	2,499	85.37	82.39	0.058199	0.057214	0.713732	-18.86205	-19.575794
67	Pipe	2,499	82.55	82.18	0.057326	0.057231	0.452441	-20.30771	-20.760155
68	Pipe	2,499	82.34	81.70	0.057343	0.057165	0.647050	-21.48978	-22.136827
69	Pipe	2,499	44.01	43.86	0.030788	0.030737	0.060927	-28.43109	-28.492018
70	8" Sch 10	2,499	44.00	40.38	0.030832	0.029555	0.803037	-29.62065	-30.423689
80	Pipe	0	0.00	0.00	0.000000	0.000000	0.000000	0.00000	0.000000
81	Pipe	0	0.00	0.00	0.000000	0.000000	0.000000	0.00000	0.000000
82	Pipe	0	0.00	0.00	0.000000	0.000000	0.000000	0.00000	0.000000
83	Pipe	0	0.00	0.00	0.000000	0.000000	0.000000	-34.49336	-34.493362
84	3" Sch 40	0	0.00	0.00	0.000000	0.000000	0.000000	-34.49336	-34.493362
90	Pipe	8,320	41.10	41.21	0.035104	0.035192	0.989621	0.00000	-0.989621
91	Pipe	8,320	41.70	41.75	0.035611	0.035658	0.511494	-5.62667	-6.138168
92	12" Sch 10	8,320	44.54	44.59	0.038041	0.038084	0.416064	-30.51313	-30.929192
93	Pipe	11,002	58.97	58.97	0.050365	0.050366	0.004936	-30.70333	-30.708263
94	Pipe	11,002	58.97	58.97	0.050366	0.050369	0.018954	-30.70826	-30.727217
100	Pipe	10,723	43.82	43.90	0.037422	0.037497	0.783080	0.00000	-0.783080
101	Pipe	10,723	44.01	44.03	0.037586	0.037605	0.202000	-1.71647	-1.918473
102	Pipe	10,723	44.05	44.05	0.037623	0.037624	0.003643	-2.11160	-2.115246
103	14" Sch 10	10,723	62.86	62.90	0.053690	0.053729	0.199255	-119.71472	-119.913979
200	Pipe	0	0.00	0.00	0.000000	0.000000	0.000000	0.00000	0.000000
201	Pipe	0	0.00	0.00	0.000000	0.000000	0.000000	0.00000	0.000000
202	Pipe	0	0.00	0.00	0.000000	0.000000	No Solution	No Solution	No Solution
203	Pipe	0	0.00	0.00	0.000000	0.000000	0.000000	19.79171	19.791706
X204	Pipe	0	0.00	0.00	0.000000	0.000000	72.579880	-19.39581	-91.975693
210	Pipe	0	0.00	0.00	0.000000	0.000000	0.000000	0.00000	0.000000
211	Pipe	0	0.00	0.00	0.000000	0.000000	0.000000	0.00000	0.000000
212	Pipe	0	0.00	0.00	0.000000	0.000000	0.000000	0.00000	0.000000
213	Pipe	0	0.00	0.00	0.000000	0.000000	No Solution	No Solution	No Solution
214	Pipe	0	0.00	0.00	0.000000	0.000000	No Solution	No Solution	No Solution
X215	Pipe	0	0.00	0.00	0.000000	0.000000	No Solution	No Solution	No Solution
625	Pipe	0	0.00	0.00	0.000000	0.000000	0.000000	-124.19402	-124.194023
631	Pipe	0	0.00	0.00	0.000000	0.000000	0.000000	-139.02600	-139.026001
636	Pipe	0	0.00	0.00	0.000000	0.000000	0.000000	-167.33318	-167.333176
637	Pipe	2,682	59.91	59.91	0.051157	0.051161	0.024234	-30.02600	-30.050232
X638	Pipe	0	0.00	0.00	0.000000	0.000000	No Solution	No Solution	19.791706

Pipe	P Static In (in. H2O std. (g))	P Static Out (in. H2O std. (g))	dT Stag. (deg. F)	T Stag. Inlet (deg. F)	T Stag. Outlet (deg. F)	T Static In (deg. F)	T Static Out (deg. F)	dH Stag. (Btu/lbm)	H Stag. In (Btu/lbm)
1	-0.17922	-0.743008	-0.00006104	115.00	115.00	114.93	114.93	-8.072E-07	206.1
2	-2.35761	-2.548126	-0.00006104	115.00	115.00	114.92	114.92	1.896E-05	206.1
3	-3.37783	-5.926955	-0.00189209	115.00	115.00	114.62	114.61	4.437E-05	206.1
4	-5.31705	-5.398170	0.00006104	115.00	115.00	114.92	114.92	2.882E-05	206.1
5	-6.23394	-6.334994	-0.00006104	115.00	115.00	114.61	114.61	9.224E-06	206.1
6	-7.22673	-7.337075	-53.81623730	875.00	821.18	874.60	820.81	-1.345E+01	393.8
7	-7.80002	-8.180924	-91.17614746	821.18	730.00	820.41	729.33	-2.274E+01	380.4

AFT Arrow 3.0 Output (5 of 13) 2/24/2006
DMJMH+N

AFT Arrow Model Main OGTS Case 4 (115°F, Heat Transfer, Dirty Filters, Backdraft Damper)

Pipe	P Static In (in. H2O std. (g))	P Static Out (in. H2O std. (g))	dT Stag. (deg. F)	T Stag. Inlet (deg. F)	T Stag. Outlet (deg. F)	T Static In (deg. F)	T Static Out (deg. F)	dH Stag. (Btu/lbm)	H Stag. In (Btu/lbm)
8	-8.50256	-8.535085	-3.73815918	730.00	726.26	729.68	725.94	-9.307E-01	357.6
9	-8.86081	-8.988792	-23.44226074	726.26	702.82	725.94	702.51	-5.833E+00	356.7
16	-31.04136	-31.262390	-0.83496094	153.87	153.04	153.68	152.84	-2.039E-01	215.6
17	-31.49847	-31.509901	-0.12756348	153.04	152.91	152.84	152.72	-3.115E-02	215.4
18	-31.74458	-31.799809	-0.11358643	152.91	152.79	152.72	152.60	-2.772E-02	215.3
19	-37.68070	-37.778503	-0.11322021	152.79	152.68	152.59	152.48	-2.764E-02	215.3
20	-92.39638	-92.466118	-0.14428711	152.64	152.50	152.36	152.22	-3.522E-02	215.3
21	-92.46612	-92.529976	-0.08984375	152.50	152.41	152.22	152.13	-2.194E-02	215.2
22	-102.68742	-102.754532	-0.09863281	152.40	152.30	152.10	152.00	-2.407E-02	215.2
23	-106.84754	-107.176727	-0.24652100	177.30	177.05	176.97	176.72	-6.021E-02	221.3
24	-107.48369	-107.486351	-0.03723145	177.05	177.02	176.72	176.68	-9.101E-03	221.2
25	-107.65807	-107.749146	-0.14318848	177.02	176.87	176.68	176.54	-3.499E-02	221.2
26	-108.05326	-108.128700	-0.22436523	176.87	176.65	176.54	176.31	-5.482E-02	221.2
27	-115.58156	-115.667122	-0.33221436	176.64	176.31	176.29	175.96	-8.117E-02	221.1
28	-120.24573	-120.249023	-0.04412842	176.31	176.26	175.95	175.90	-1.079E-02	221.1
29	-120.35575	-120.359077	-0.04412842	176.26	176.22	175.90	175.86	-1.078E-02	221.0
30	-120.46584	-120.479218	-0.17620850	176.22	176.04	175.86	175.68	-4.305E-02	221.0
31	-120.47922	-120.575890	-1.25842285	176.04	174.79	175.68	174.42	-3.075E-01	221.0
32	-120.89011	-120.994751	-0.04309082	174.79	174.74	174.42	174.38	-1.052E-02	220.7
33	-121.16756	-121.520554	-0.37341309	148.27	147.90	147.84	147.46	-9.111E-02	214.2
35	-145.08591	-145.518860	-12.15661621	277.90	265.74	277.53	265.38	-2.980E+00	245.9
36	-145.51886	-145.524216	-0.35375977	265.74	265.39	265.38	265.03	-8.671E-02	242.9
37	-145.78831	-145.792740	-0.29125977	265.39	265.10	265.03	264.74	-7.138E-02	242.9
38	-146.05457	-146.063858	-0.60711670	265.10	264.49	264.74	264.13	-1.488E-01	242.8
39	-147.10062	-147.264420	-0.22070313	264.49	264.27	263.35	263.13	-5.408E-02	242.6
40	5.54993	5.105333	-1.25158691	417.34	416.09	416.92	415.66	-3.083E-01	280.2
41	4.68061	4.675885	-0.30560303	416.09	415.78	415.66	415.36	-7.530E-02	279.9
42	0.04123	0.036456	-0.30529785	415.78	415.47	415.35	415.04	-7.522E-02	279.8
43	0.01748	-0.008131	-65.29156494	415.47	350.18	415.46	350.17	-1.607E+01	279.7
50	-0.48378	-2.343697	-0.00109863	115.00	115.00	114.80	114.80	3.028E-06	206.1
51	-5.32016	-5.748476	-0.00030518	115.00	115.00	114.79	114.79	1.690E-05	206.1
52	-6.39009	-6.665818	-0.00012207	115.00	115.00	114.79	114.79	2.844E-05	206.1
53	-7.40357	-7.771856	-0.00006104	114.99	114.99	114.79	114.79	5.826E-05	206.1
54	-8.41645	-9.329833	0.00012207	114.99	114.99	114.79	114.79	2.122E-04	206.1
55	-10.60506	-10.846786	-2.10577393	457.45	455.34	456.25	454.14	-5.195E-01	290.1
60	0.00000	0.000000	0.00000000	115.00	115.00	115.00	115.00	0.000E+00	206.1
61	0.00000	0.000000	0.00000000	115.00	115.00	115.00	115.00	0.000E+00	206.1
62	-9.78085	-9.780849	0.00000000	552.83	552.83	552.83	552.83	0.000E+00	313.6
63	-9.78085	-9.780849	0.00000000	552.83	552.83	552.83	552.83	0.000E+00	313.6
64	-11.39431	-11.614952	-5.26269531	455.34	450.08	454.14	448.89	-1.298E+00	289.6
65	-12.35149	-12.505210	-4.39855957	450.08	445.68	450.01	445.62	-1.085E+00	288.3
66	-19.74516	-20.428038	-33.19055176	445.68	412.49	445.09	411.94	-8.180E+00	287.2
67	-21.16162	-21.610260	-4.92333984	412.49	407.57	411.94	407.02	-1.213E+00	279.0
68	-22.34155	-22.981972	-8.22064209	407.57	399.35	407.02	398.80	-2.024E+00	277.8
69	-28.67237	-28.732452	-3.09020996	399.34	396.25	399.19	396.10	-7.608E-01	275.8
70	-29.86183	-30.645014	-72.07043457	396.25	324.18	396.10	324.05	-1.772E+01	275.0
80	0.00000	0.000000	0.00000000	115.00	115.00	115.00	115.00	0.000E+00	206.1
81	0.00000	0.000000	0.00000000	115.00	115.00	115.00	115.00	0.000E+00	206.1
82	0.00000	0.000000	0.00000000	115.00	115.00	115.00	115.00	0.000E+00	206.1
83	-34.49336	-34.493362	0.00000000	115.05	115.05	115.05	115.05	0.000E+00	206.1
84	-34.49336	-34.493362	0.00000000	115.05	115.05	115.05	115.05	0.000E+00	206.1
90	-0.33903	-1.329499	-0.00036621	115.00	115.00	114.86	114.86	-3.381E-08	206.1
91	-5.97062	-6.482561	-0.00036621	115.00	115.00	114.85	114.85	1.597E-05	206.1
92	-30.88054	-31.297026	0.00006104	114.98	114.98	114.81	114.81	9.603E-05	206.1

AFT Arrow 3.0 Output (6 of 13) 2/24/2006
DMJMH+N

AFT Arrow Model Main OGTS Case 4 (115°F, Heat Transfer, Dirty Filters, Backdraft Damper)

Pipe	P Static In (in. H2O std. (g))	P Static Out (in. H2O std. (g))	dT Stag. (deg. F)	T Stag. Inlet (deg. F)	T Stag. Outlet (deg. F)	T Static In (deg. F)	T Static Out (deg. F)	dH Stag. (Btu/lbm)	H Stag. In (Btu/lbm)
93	-31.34673	-31.351669	0.00000000	115.05	115.05	114.77	114.77	-1.197E-05	206.1
94	-31.35167	-31.370651	-0.00024414	115.05	115.05	114.77	114.77	-4.577E-05	206.1
100	-0.38526	-1.169103	0.00000000	115.00	115.00	114.84	114.84	0.000E+00	206.1
101	-2.10342	-2.305604	-0.00018311	115.00	115.00	114.84	114.84	7.626E-07	206.1
102	-2.49892	-2.502589	0.00000000	115.00	115.00	114.84	114.84	4.202E-07	206.1
103	-120.26759	-120.467232	0.00079346	114.90	114.90	114.58	114.58	2.328E-04	206.1
200	0.00000	0.000000	0.00000000	115.00	115.00	115.00	115.00	0.000E+00	206.1
201	0.00000	0.000000	0.00000000	115.00	115.00	115.00	115.00	0.000E+00	206.1
202	No Solution	No Solution	0.00000000	70.00	70.00	70.00	70.00	-9.502E-03	195.1
203	19.79171	19.791706	0.00000000	70.00	70.00	70.00	70.00	0.000E+00	195.1
X204	-19.39581	-91.975693	82.49554443	70.00	152.50	70.00	152.50	2.014E+01	195.1
210	0.00000	0.000000	0.00000000	115.00	115.00	115.00	115.00	0.000E+00	206.1
211	0.00000	0.000000	0.00000000	115.00	115.00	115.00	115.00	0.000E+00	206.1
212	0.00000	0.000000	0.00000000	115.00	115.00	115.00	115.00	0.000E+00	206.1
213	No Solution	No Solution	45.00000000	70.00	115.00	70.00	115.00	1.097E+01	195.1
214	No Solution	No Solution	0.00000000	115.00	115.00	115.00	115.00	3.434E-03	206.1
X215	No Solution	No Solution	0.00000000	115.00	115.00	115.00	115.00	5.307E-03	206.1
625	-124.19402	-124.194023	0.00000000	221.50	221.50	221.50	221.50	0.000E+00	232.1
631	-139.02600	-139.026001	0.00000000	221.49	221.49	221.49	221.49	0.000E+00	232.1
636	-167.33318	-167.333176	0.00000000	304.34	304.34	304.34	304.34	0.000E+00	252.4
637	-30.69100	-30.715284	-0.00085449	115.29	115.29	115.00	115.00	-2.876E-04	206.1
X638	No Solution	19.791706	-45.00000000	115.00	70.00	115.00	70.00	-1.098E+01	206.1

Pipe	H Stag. Out (Btu/lbm)	H Static In (Btu/lbm)	H Static Out (Btu/lbm)	Rho Stag. In (lbm/ft3)	Rho Stag. Out (lbm/ft3)	Heat Transfer Model	Heat Flux (Btu/hr-ft2)	Heat Rate (Btu/hr)
1	206.1	206.0	206.0	0.06719	0.06710	Gen'l Heat Tran.	-1.382E-04	-1.170E-03
2	206.1	206.0	206.0	0.06683	0.06679	Gen'l Heat Tran.	1.998E-03	2.749E-02
3	206.1	206.0	206.0	0.06678	0.06635	Gen'l Heat Tran.	4.134E-03	6.433E-02
4	206.1	206.0	206.0	0.06632	0.06631	Gen'l Heat Tran.	5.093E-03	4.178E-02
5	206.1	206.0	206.0	0.06630	0.06628	Gen'l Heat Tran.	6.921E-03	1.337E-02
6	380.4	393.7	380.3	0.02842	0.02960	Gen'l Heat Tran.	-2.047E+03	-1.951E+04
7	357.6	380.2	357.5	0.02960	0.03184	Gen'l Heat Tran.	-2.116E+03	-3.296E+04
8	356.7	357.5	356.6	0.03178	0.03187	Gen'l Heat Tran.	-1.700E+03	-1.349E+03
9	350.9	356.6	350.8	0.03185	0.03248	Gen'l Heat Tran.	-1.660E+03	-8.457E+03
16	215.4	215.5	215.3	0.05806	0.05810	Gen'l Heat Tran.	-4.462E+01	-2.753E+03
17	215.3	215.3	215.3	0.05807	0.05808	Gen'l Heat Tran.	-4.407E+01	-4.206E+02
18	215.3	215.3	215.3	0.05804	0.05804	Gen'l Heat Tran.	-4.393E+01	-3.743E+02
19	215.3	215.2	215.2	0.05711	0.05710	Gen'l Heat Tran.	-4.379E+01	-3.731E+02
20	215.2	215.2	215.2	0.04841	0.04841	Gen'l Heat Tran.	-4.359E+01	-4.755E+02
21	215.2	215.2	215.1	0.04841	0.04841	Gen'l Heat Tran.	-4.346E+01	-2.963E+02
22	215.2	215.1	215.1	0.04680	0.04679	Gen'l Heat Tran.	-4.334E+01	-3.250E+02
23	221.2	221.2	221.2	0.04433	0.04430	Gen'l Heat Tran.	-7.226E+01	-8.129E+02
24	221.2	221.2	221.1	0.04425	0.04425	Gen'l Heat Tran.	-7.210E+01	-1.229E+02
25	221.2	221.1	221.1	0.04423	0.04422	Gen'l Heat Tran.	-7.199E+01	-4.724E+02
26	221.1	221.1	221.1	0.04418	0.04418	Gen'l Heat Tran.	-7.178E+01	-7.401E+02
27	221.1	221.1	221.0	0.04304	0.04305	Gen'l Heat Tran.	-7.145E+01	-1.096E+03
28	221.0	221.0	221.0	0.04235	0.04235	Gen'l Heat Tran.	-7.122E+01	-1.457E+02
29	221.0	221.0	220.9	0.04234	0.04234	Gen'l Heat Tran.	-7.117E+01	-1.456E+02
30	221.0	220.9	220.9	0.04232	0.04233	Gen'l Heat Tran.	-7.104E+01	-5.812E+02
31	220.7	220.9	220.6	0.04233	0.04240	Gen'l Heat Tran.	-7.021E+01	-4.152E+03
32	220.7	220.6	220.6	0.04235	0.04234	Gen'l Heat Tran.	-6.945E+01	-1.420E+02
33	214.1	214.1	214.0	0.04418	0.04415	Gen'l Heat Tran.	-4.867E+01	-2.207E+03
35	242.9	245.8	242.9	0.03321	0.03371	Gen'l Heat Tran.	-2.133E+02	-7.219E+04
36	242.9	242.9	242.8	0.03371	0.03373	Gen'l Heat Tran.	-2.048E+02	-2.100E+03

AFT Arrow 3.0 Output (7 of 13) 2/24/2006
DMJMH+N

AFT Arrow Model Main OGTS Case 4 (115°F, Heat Transfer, Dirty Filters, Backdraft Damper)

Pipe	H Stag. Out (Btu/lbm)	H Static In (Btu/lbm)	H Static Out (Btu/lbm)	Rho Stag. In (lbm/ft3)	Rho Stag. Out (lbm/ft3)	Heat Transfer Model	Heat Flux (Btu/hr-ft2)	Heat Rate (Btu/hr)
37	242.8	242.8	242.7	0.03369	0.03370	Gen'l Heat Tran.	-2.044E+02	-1.729E+03
38	242.6	242.7	242.6	0.03367	0.03370	Gen'l Heat Tran.	-2.038E+02	-3.604E+03
39	242.6	242.4	242.3	0.03369	0.03367	Gen'l Heat Tran.	-1.817E+02	-1.310E+03
40	279.9	280.1	279.8	0.04470	0.04472	Gen'l Heat Tran.	-4.510E+02	-7.469E+03
41	279.8	279.8	279.7	0.04467	0.04469	Gen'l Heat Tran.	-4.498E+02	-1.824E+03
42	279.7	279.7	279.6	0.04417	0.04419	Gen'l Heat Tran.	-4.494E+02	-1.822E+03
43	263.7	279.7	263.7	0.04411	0.04766	Gen'l Heat Tran.	-2.079E+02	-3.892E+05
50	206.1	206.0	206.0	0.06719	0.06688	Gen'l Heat Tran.	2.761E-04	3.177E-03
51	206.1	206.0	206.0	0.06638	0.06630	Gen'l Heat Tran.	5.958E-03	1.773E-02
52	206.1	206.0	206.0	0.06619	0.06615	Gen'l Heat Tran.	7.209E-03	2.984E-02
53	206.1	206.0	206.0	0.06602	0.06596	Gen'l Heat Tran.	8.321E-03	6.112E-02
54	206.1	206.0	206.0	0.06585	0.06570	Gen'l Heat Tran.	8.949E-03	2.226E-01
55	289.6	289.8	289.3	0.04115	0.04122	Gen'l Heat Tran.	-1.241E+03	-1.298E+03
60	206.1	206.1	206.1	0.06719	0.06719	Gen'l Heat Tran.	0.000E+00	0.000E+00
61	206.1	206.1	206.1	0.06719	0.06719	Gen'l Heat Tran.	0.000E+00	0.000E+00
62	313.6	313.6	313.6	0.03718	0.03718	Gen'l Heat Tran.	0.000E+00	0.000E+00
63	313.6	313.6	313.6	0.03718	0.03718	Gen'l Heat Tran.	0.000E+00	0.000E+00
64	288.3	289.3	288.0	0.04116	0.04137	Gen'l Heat Tran.	-1.227E+03	-3.243E+03
65	287.2	288.2	287.2	0.04111	0.04129	Gen'l Heat Tran.	-6.625E+02	-2.711E+03
66	279.0	287.0	278.9	0.04060	0.04207	Gen'l Heat Tran.	-1.016E+03	-2.044E+04
67	277.8	278.9	277.6	0.04198	0.04217	Gen'l Heat Tran.	-9.543E+02	-3.030E+03
68	275.8	277.6	275.6	0.04209	0.04242	Gen'l Heat Tran.	-9.325E+02	-5.059E+03
69	275.0	275.7	275.0	0.04170	0.04185	Gen'l Heat Tran.	-6.976E+02	-1.901E+03
70	257.3	275.0	257.2	0.04172	0.04546	Gen'l Heat Tran.	-4.625E+02	-4.429E+04
80	206.1	206.1	206.1	0.06719	0.06719	Gen'l Heat Tran.	0.000E+00	0.000E+00
81	206.1	206.1	206.1	0.06719	0.06719	Gen'l Heat Tran.	0.000E+00	0.000E+00
82	206.1	206.1	206.1	0.06719	0.06719	Gen'l Heat Tran.	0.000E+00	0.000E+00
83	206.1	206.1	206.1	0.06133	0.06133	Gen'l Heat Tran.	0.000E+00	0.000E+00
84	206.1	206.1	206.1	0.06133	0.06133	Gen'l Heat Tran.	0.000E+00	0.000E+00
90	206.1	206.0	206.0	0.06719	0.06703	Gen'l Heat Tran.	-1.334E-05	-2.813E-04
91	206.1	206.0	206.0	0.06624	0.06615	Gen'l Heat Tran.	6.143E-03	1.328E-01
92	206.1	206.0	206.0	0.06202	0.06195	Gen'l Heat Tran.	3.519E-02	7.990E-01
93	206.1	206.0	206.0	0.06198	0.06197	Gen'l Heat Tran.	-8.118E-02	-1.317E-01
94	206.1	206.0	206.0	0.06197	0.06197	Gen'l Heat Tran.	-8.099E-02	-5.035E-01
100	206.1	206.0	206.0	0.06719	0.06706	Gen'l Heat Tran.	0.000E+00	0.000E+00
101	206.1	206.0	206.0	0.06690	0.06687	Gen'l Heat Tran.	1.487E-03	8.177E-03
102	206.1	206.0	206.0	0.06684	0.06684	Gen'l Heat Tran.	1.895E-03	4.506E-03
103	206.1	206.0	206.0	0.04688	0.04684	Gen'l Heat Tran.	1.412E-01	2.497E+00
200	206.1	206.1	206.1	0.06719	0.06719	Gen'l Heat Tran.	0.000E+00	0.000E+00
201	206.1	206.1	206.1	0.06719	0.06719	Gen'l Heat Tran.	0.000E+00	0.000E+00
202	195.1	195.1	195.1	0.06920	0.07656	Gen'l Heat Tran.	0.000E+00	0.000E+00
203	195.1	195.1	195.1	0.07657	0.07657	Gen'l Heat Tran.	0.000E+00	0.000E+00
X204	215.2	195.1	215.2	0.06934	0.04841	Gen'l Heat Tran.	0.000E+00	0.000E+00
210	206.1	206.1	206.1	0.06719	0.06719	Gen'l Heat Tran.	0.000E+00	0.000E+00
211	206.1	206.1	206.1	0.06719	0.06719	Gen'l Heat Tran.	0.000E+00	0.000E+00
212	206.1	206.1	206.1	0.06719	0.06719	Gen'l Heat Tran.	0.000E+00	0.000E+00
213	206.1	195.1	206.1	0.07693	0.07144	Gen'l Heat Tran.	0.000E+00	0.000E+00
214	206.1	206.1	206.1	0.07143	0.06847	Gen'l Heat Tran.	0.000E+00	0.000E+00
X215	206.1	206.1	206.1	0.06847	0.06390	Gen'l Heat Tran.	0.000E+00	0.000E+00
625	232.1	232.1	232.1	0.03889	0.03889	Gen'l Heat Tran.	0.000E+00	0.000E+00
631	232.1	232.1	232.1	0.03677	0.03677	Gen'l Heat Tran.	0.000E+00	0.000E+00
636	252.4	252.4	252.4	0.02917	0.02917	Gen'l Heat Tran.	0.000E+00	0.000E+00
637	206.1	206.1	206.1	0.06206	0.06206	Gen'l Heat Tran.	-4.857E-01	-7.713E-01
X638	195.1	206.1	195.1	0.06357	0.07657	Gen'l Heat Tran.	0.000E+00	0.000E+00

AFT Arrow 3.0 Output (8 of 13) 2/24/2006
DMJMH+N

AFT Arrow Model Main OGTS Case 4 (115°F, Heat Transfer, Dirty Filters, Backdraft Damper)

All Junction Table

Jct	Name	Mass Flow Thru Junction (lbm/hr)	dP Stag. Total (in. H2O std.)	P Stag. In (in. H2O std. (g))	P Stag. Out (in. H2O std. (g))	P Static In (in. H2O std. (g))
1	Assigned Pressure	1,450	0.00000	0.0000	0.00000	-0.17922
2	ICV Filter N02-010	1,450	1.61386	-0.5635	-2.17739	-0.74301
3	Area Change	1,450	0.07928	-2.3678	-2.44710	-2.54813
4	Area Change	1,450	0.14529	-4.9902	-5.13545	-5.92695
5	Area Change	1,450	0.07986	-5.2165	-5.29640	-5.39817
6	ICV	1,450	1.40547	-5.3972	-6.80267	-6.33499
7	Area Change	1,450	0.02001	-6.9300	-6.95002	-7.33708
8	HV-114	1,450	0.73267	-7.3907	-8.12332	-8.18092
9	HV-115	1,450	0.32541	-8.1570	-8.48242	-8.53508
16	Tee or Wye	N/A	See Losses	-30.6326	-30.63263	-31.10857
17	36-V-049	13,501	0.23582	-30.8540	-31.08980	-31.26239
18	HV-125	13,501	0.23442	-31.1013	-31.33570	-31.50990
19	Packed Tower	13,501	5.87419	-31.3910	-37.26514	-31.79981
20	Venturi/Demister	13,501	54.54306	-37.3629	-91.90594	-37.77850
21	Tee or Wye	N/A	0.00000	-91.9757	-91.97569	-92.46612
22	Condenser Demister	13,501	10.14046	-92.0395	-102.17997	-92.52998
23	WSS Heater	13,501	4.06476	-102.2470	-106.31181	-102.75453
24	WSS Valve V-072	13,501	0.30637	-106.6406	-106.94698	-107.17673
25	Tee or Wye	N/A	See Losses	-124.1940	-124.19402	-124.69886
26	HV-313	13,501	0.30355	-107.2121	-107.51566	-107.74915
27	HEPA	13,501	7.43855	-107.5912	-115.02970	-108.12870
28	36-V-014	13,501	0.10649	-119.6882	-119.79465	-120.24902
29	HEGA	13,501	4.56942	-115.1154	-119.68481	-115.66712
30	HV-314	13,501	0.10652	-119.7980	-119.90456	-120.35908
31	Tee or Wye	N/A	0.00000	-139.0260	-139.02600	-139.54819
32	36-V-017	13,501	0.31358	-120.0157	-120.32925	-120.57589
33	Tee or Wye	N/A	See Losses	-120.4631	-120.46309	-121.09171
34	SCR	24,224	23.82054	-120.8156	-144.63615	-121.52055
36	Tee or Wye	N/A	0.00000	-167.3332	-167.33318	-167.73689
37	36-V-074	24,224	0.26360	-145.0813	-145.34496	-145.52422
38	36-V-024	24,224	0.26139	-145.3495	-145.61092	-145.79274
39	Area Change	24,224	0.07246	-145.6205	-145.69298	-146.06386
40	Fan N31-025	24,224	-152.10181	-145.8563	6.24553	-147.26442
41	36-V-080	24,224	0.42398	5.8007	5.37671	5.10533
42	36-N25-156	24,224	4.62650	5.3717	0.74525	4.67588
43	Branch	24,224	0.70333	0.7402	0.03690	0.03646
44	Assigned Pressure	24,224	0.00000	0.0000	0.00000	-0.01798
50	Assigned Pressure	1,049	0.00000	0.0000	0.00000	-0.48378
51	AWTE Filter N22-026	1,049	2.97275	-1.8577	-4.83039	-2.34370
52	HV-111	1,049	0.64080	-5.2582	-5.89897	-5.74848
53	AWTE	1,049	0.73685	-6.1744	-6.91119	-6.66582
54	HV-113	1,049	0.64376	-7.2790	-7.92277	-7.77186
55	Tee or Wye	N/A	See Losses	-8.7834	-8.78339	-9.78264
60	Assigned Pressure	0	0.00000	0.0000	0.00000	0.00000
61	SMF Dilution Filter N02-049	0	0.00000	0.0000	0.00000	0.00000
X62	TV-014	0	9.78084	0.0000	-9.78085	0.00000
63	Area Change	0	0.00000	-9.7808	-9.78085	-9.78085
64	Tee or Wye	N/A	See Losses	-9.5731	-9.57309	-11.39096
65	HV-002	2,499	2.44843	-9.8032	-12.25163	-11.61495
66	SMF N02-019	2,499	6.45625	-12.4058	-18.86206	-12.50521
67	HV-003	2,499	0.73193	-19.5758	-20.30771	-20.42804
68	HV-004	2,499	0.72963	-20.7602	-21.48978	-21.61026

AFT Arrow 3.0 Output (9 of 13) 2/24/2006
DMJMH+N

AFT Arrow Model Main OGTS Case 4 (115°F, Heat Transfer, Dirty Filters, Backdraft Damper)

Jct	Name	Mass Flow Thru Junction (lbm/hr)	dP Stag. Total (in. H2O std.)	P Stag. In (in. H2O std. (g))	P Stag. Out (in. H2O std. (g))	P Static In (in. H2O std. (g))
69	SMF N02-020	2,499	6.29426	-22.1368	-28.43109	-22.98197
70	HV-005	2,499	1.12865	-28.4920	-29.62065	-28.73245
80	Assigned Pressure	0	0.00000	0.0000	0.00000	0.00000
81	WRS Tank Filter	0	0.00000	0.0000	0.00000	0.00000
82	Area Change	0	0.00000	0.0000	0.00000	0.00000
X83	32-V-003	0	34.49337	0.0000	-34.49336	0.00000
84	Area Change	0	0.00000	-34.4934	-34.49336	-34.49336
90	Assigned Pressure	8,320	0.00000	0.0000	0.00000	-0.33903
91	WSS Filter N02-101/102	8,320	4.63703	-0.9896	-5.62667	-1.32950
92	FV-016	8,320	24.37495	-6.1382	-30.51313	-6.48256
93	Tee or Wye	N/A	See Losses	-30.7041	-30.70409	-31.23668
94	Tee or Wye	N/A	0.00000	-30.7083	-30.70826	-31.35167
100	Assigned Pressure	10,723	0.00000	0.0000	0.00000	-0.38526
101	SCR Filter N02-022	10,723	0.93339	-0.7831	-1.71647	-1.16910
102	HV-504	10,723	117.59948	-2.1152	-119.71472	-2.50259
103	36-V-019	10,723	0.19311	-1.9185	-2.11160	-2.30560
200	Assigned Pressure	0	0.00000	0.0000	0.00000	0.00000
201	WSS Filter N02-093	0	0.00000	0.0000	0.00000	0.00000
X202	FV-331	0	20.18748	0.0000	-20.18750	0.00000
203	Tee or Wye	0	0.00000	19.7917	19.79171	19.79171
204	Tee or Wye	0	0.00000	19.7917	19.79171	19.79171
210	Assigned Pressure	0	0.00000	0.0000	0.00000	0.00000
211	SWS Tank Filter N02-014A	0	0.00000	0.0000	0.00000	0.00000
212	Area Change	0	0.00000	0.0000	0.00000	0.00000
X213	37-V-004	0	-21.77087	0.0000	21.77087	0.00000
214	Area Change	0	No Solution	No Solution	No Solution	No Solution
215	Area Change	0	No Solution	No Solution	No Solution	No Solution
625	Backup HEPA/HEGA Isolated	0	0.00000	-124.1940	-124.19402	-124.19402
631	Backup HEPA/HEGA Isolated	0	0.00000	-139.0260	-139.02600	-139.02600
636	Redundant Fan Isolated	0	0.00000	-167.3332	-167.33318	-167.33318
637	Waste Feed Blower	2,682	0.00000	-30.0268	-30.02600	-30.69176
638	Assigned Flow Vac Pump	0	No Solution	No Solution	No Solution	No Solution

Jct	P Static Out (in. H2O std. (g))	dT Stag. (deg. F)	T Stag. Inlet (deg. F)	T Stag. Outlet (deg. F)	T Static In (deg. F)	T Static Out (deg. F)	dH Stag. (Btu/lbm)	H Stag. In (Btu/lbm)	H Stag. Out (Btu/lbm)
1	-0.17922	0.00000000	115.00	115.00	115.00	115.00	0.000	206.1	206.1
2	-2.35761	-0.00128174	115.00	115.00	114.93	114.92	0.000	206.1	206.1
3	-3.37783	-0.00048828	115.00	115.00	114.92	114.62	0.000	206.1	206.1
4	-5.31705	0.00030518	115.00	115.00	114.61	114.92	0.000	206.1	206.1
5	-6.23394	-0.00048828	115.00	115.00	114.92	114.61	0.000	206.1	206.1
6	-7.22673	760.00001526	115.00	875.00	114.61	874.60	-187.754	206.1	393.8
7	-7.80002	0.00012207	821.18	821.18	820.81	820.41	0.000	380.4	380.4
8	-8.50256	-0.00012207	730.00	730.00	729.33	729.68	0.000	357.6	357.6
9	-8.86081	0.00000000	726.26	726.26	725.94	725.94	0.000	356.7	356.7
16	-31.10857	0.00000000	153.87	153.87	153.64	153.64	N/A	215.6	215.6
17	-31.49847	-0.00018311	153.04	153.04	152.84	152.84	0.000	215.4	215.4
18	-31.74458	-0.00012207	152.91	152.91	152.72	152.72	0.000	215.3	215.3
19	-37.68070	-0.00402832	152.79	152.79	152.60	152.59	0.000	215.3	215.3
20	-92.39638	-0.03790283	152.68	152.64	152.48	152.36	0.000	215.3	215.3
21	-92.46612	0.00000000	152.50	152.50	152.22	152.22	N/A	215.2	215.2
22	-102.68742	-0.00708008	152.41	152.40	152.13	152.10	0.000	215.2	215.2
23	-106.84754	25.00000000	152.30	177.30	152.00	176.97	-6.108	215.2	221.3
24	-107.48369	-0.00018311	177.05	177.05	176.72	176.72	0.000	221.2	221.2
25	-124.69886	0.00000000	221.50	221.50	221.15	221.15	N/A	232.1	232.1

AFT Arrow 3.0 Output (10 of 13) 2/24/2006
DMJMH+N

AFT Arrow Model Main OGTS Case 4 (115°F, Heat Transfer, Dirty Filters, Backdraft Damper)

Jct	P Static Out (in. H2O std. (g))	dT Stag. (deg. F)	T Stag. Inlet (deg. F)	T Stag. Outlet (deg. F)	T Static In (deg. F)	T Static Out (deg. F)	dH Stag. (Btu/lbm)	H Stag. In (Btu/lbm)	H Stag. Out (Btu/lbm)
26	-108.05326	-0.00018311	176.87	176.87	176.54	176.54	0.000	221.2	221.2
27	-115.58156	-0.00469971	176.65	176.64	176.31	176.29	0.000	221.1	221.1
28	-120.35575	-0.00006104	176.26	176.26	175.90	175.90	0.000	221.0	221.0
29	-120.24573	-0.00286865	176.31	176.31	175.96	175.95	0.000	221.1	221.1
30	-120.46584	-0.00006104	176.22	176.22	175.86	175.86	0.000	221.0	221.0
31	-139.54819	0.00000000	221.49	221.49	221.10	221.10	N/A	232.1	232.1
32	-120.89011	-0.00024414	174.79	174.79	174.42	174.42	0.000	220.7	220.7
33	-121.09171	0.00000000	148.27	148.27	147.88	147.88	N/A	214.2	214.2
34	-145.08591	129.99998474	147.90	277.90	147.46	277.53	-31.810	214.1	245.9
36	-167.73689	0.00000000	304.34	304.34	303.97	303.97	N/A	252.4	252.4
37	-145.78831	-0.00012207	265.39	265.39	265.03	265.03	0.000	242.9	242.9
38	-146.05457	-0.00012207	265.10	265.10	264.74	264.74	0.000	242.8	242.8
39	-147.10062	-0.00024414	264.49	264.49	264.13	263.35	0.000	242.6	242.6
40	5.54993	153.06903076	264.27	417.34	263.13	416.92	-37.601	242.6	280.2
41	4.68061	-0.00012207	416.09	416.09	415.66	415.66	0.000	279.9	279.9
42	0.04123	-0.00103760	415.78	415.78	415.36	415.35	0.000	279.8	279.8
43	0.01748	0.00000000	415.47	415.47	415.04	415.46	0.000	279.7	279.7
44	-0.01798	0.00000000	115.00	115.00	115.00	115.00	0.000	206.1	206.1
50	-0.48378	0.00000000	115.00	115.00	115.00	115.00	0.000	206.1	206.1
51	-5.32016	-0.00238037	115.00	115.00	114.80	114.79	0.000	206.1	206.1
52	-6.39009	-0.00048828	115.00	115.00	114.79	114.79	0.000	206.1	206.1
53	-7.40357	-0.00061035	115.00	114.99	114.79	114.79	0.000	206.1	206.1
54	-8.41645	-0.00048828	114.99	114.99	114.79	114.79	0.000	206.1	206.1
55	-9.78264	0.00000000	457.43	457.43	456.77	456.77	N/A	290.1	290.1
60	0.00000	0.00000000	115.00	115.00	115.00	115.00	0.000	206.1	206.1
61	0.00000	0.00000000	115.00	115.00	115.00	115.00	0.000	206.1	206.1
X62	-9.78085	437.83387756	115.00	552.83	115.00	552.83	0.000	206.1	313.6
63	-9.78085	0.00000000	552.83	552.83	552.83	552.83	0.000	313.6	313.6
64	-11.39096	0.00000000	455.34	455.34	454.14	454.14	N/A	289.6	289.6
65	-12.35149	0.00042725	450.08	450.08	448.89	450.01	0.000	288.3	288.3
66	-19.74516	-0.00115967	445.68	445.68	445.62	445.09	0.000	287.2	287.2
67	-21.16162	-0.00018311	412.49	412.49	411.94	411.94	0.000	279.0	279.0
68	-22.34155	-0.00018311	407.57	407.57	407.02	407.02	0.000	277.8	277.8
69	-28.67237	-0.00152588	399.35	399.34	398.80	399.19	0.000	275.8	275.8
70	-29.86183	-0.00030518	396.25	396.25	396.10	396.10	0.000	275.0	275.0
80	0.00000	0.00000000	115.00	115.00	115.00	115.00	0.000	206.1	206.1
81	0.00000	0.00000000	115.00	115.00	115.00	115.00	0.000	206.1	206.1
82	0.00000	0.00000000	115.00	115.00	115.00	115.00	0.000	206.1	206.1
X83	-34.49336	0.05212402	115.00	115.05	115.00	115.05	0.000	206.1	206.1
84	-34.49336	0.00000000	115.05	115.05	115.05	115.05	0.000	206.1	206.1
90	-0.33903	0.00000000	115.00	115.00	115.00	115.00	0.000	206.1	206.1
91	-5.97062	-0.00378418	115.00	115.00	114.86	114.85	0.000	206.1	206.1
92	-30.88054	-0.01971436	115.00	114.98	114.85	114.81	0.000	206.1	206.1
93	-31.23668	0.00000000	115.05	115.05	114.82	114.82	N/A	206.1	206.1
94	-31.35167	0.00000000	115.05	115.05	114.77	114.77	N/A	206.1	206.1
100	-0.38526	0.00000000	115.00	115.00	115.00	115.00	0.000	206.1	206.1
101	-2.10342	-0.00097656	115.00	115.00	114.84	114.84	0.000	206.1	206.1
102	-120.26759	-0.09539795	115.00	114.90	114.84	114.58	0.000	206.1	206.1
103	-2.49892	-0.00012207	115.00	115.00	114.84	114.84	0.000	206.1	206.1
200	0.00000	0.00000000	115.00	115.00	115.00	115.00	0.000	206.1	206.1
201	0.00000	0.00000000	115.00	115.00	115.00	115.00	0.000	206.1	206.1
X202	-20.18750	-45.00000000	115.00	70.00	115.00	70.00	0.000	206.1	195.1
203	19.79171	0.00000000	70.00	70.00	70.00	70.00	N/A	195.1	195.1
204	19.79171	0.00000000	70.00	70.00	70.00	70.00	N/A	195.1	195.1

AFT Arrow 3.0 Output (11 of 13) 2/24/2006
DMJMH+N

AFT Arrow Model Main OGTS Case 4 (115°F, Heat Transfer, Dirty Filters, Backdraft Damper)

Jct	P Static Out (in. H2O std. (g))	dT Stag. (deg. F)	T Stag. Inlet (deg. F)	T Stag. Outlet (deg. F)	T Static In (deg. F)	T Static Out (deg. F)	dH Stag. (Btu/lbm)	H Stag. In (Btu/lbm)	H Stag. Out (Btu/lbm)
210	0.00000	0.00000000	115.00	115.00	115.00	115.00	0.000	206.1	206.1
211	0.00000	0.00000000	115.00	115.00	115.00	115.00	0.000	206.1	206.1
212	0.00000	0.00000000	115.00	115.00	115.00	115.00	0.000	206.1	206.1
X213	21.77087	-45.00000000	115.00	70.00	115.00	70.00	0.000	206.1	195.1
214	No Solution	No Solution	No Solution	No Solution	No Solution	No Solution	0.000	No Solution	No Solution
215	No Solution	No Solution	No Solution	No Solution	No Solution	No Solution	0.000	No Solution	No Solution
625	-124.19402	0.00000000	221.50	221.50	221.50	221.50	0.000	232.1	232.1
631	-139.02600	0.00000000	221.49	221.49	221.49	221.49	0.000	232.1	232.1
636	-167.33318	0.00000000	304.34	304.34	304.34	304.34	0.000	252.4	252.4
637	-30.69100	0.00000000	115.29	115.29	115.00	115.00	0.000	206.1	206.1
638	No Solution	No Solution	No Solution	No Solution	No Solution	No Solution	0.000	No Solution	No Solution

Jct	H Static In (Btu/lbm)	H Static Out (Btu/lbm)	Sonic Area (inches2)
1	206.1	206.1	1.2722
2	206.0	206.0	1.2741
3	206.0	206.0	1.2799
4	206.0	206.0	1.2885
5	206.0	206.0	1.2892
6	206.0	393.7	1.2898
7	380.3	380.2	1.9397
8	357.5	357.5	1.8708
9	356.6	356.6	1.8715
16	215.5	215.5	N/A
17	215.3	215.3	13.2699
18	215.3	215.3	13.2775
19	215.3	215.2	13.2868
20	215.2	215.2	13.5069
21	215.2	215.2	N/A
22	215.1	215.1	15.9344
23	215.1	221.2	16.4869
24	221.2	221.2	17.0747
25	232.0	232.0	N/A
26	221.1	221.1	17.1061
27	221.1	221.1	17.1255
28	221.0	221.0	17.8703
29	221.0	221.0	17.5799
30	220.9	220.9	17.8768
31	232.0	232.0	N/A
32	220.6	220.6	17.8706
33	214.1	214.1	N/A
34	214.0	245.8	31.4643
36	252.3	252.3	N/A
37	242.8	242.8	37.7203
38	242.7	242.7	37.7531
39	242.6	242.4	37.7780
40	242.3	280.1	37.8077
41	279.8	279.8	25.9006
42	279.7	279.7	25.9237
43	279.6	279.7	N/A
44	206.1	206.1	25.2635
50	206.1	206.1	0.9206
51	206.0	206.0	0.9250
52	206.0	206.0	0.9330

AFT Arrow 3.0 Output (12 of 13) 2/24/2006
DMJMH+N

AFT Arrow Model Main OGTS Case 4 (115°F, Heat Transfer, Dirty Filters, Backdraft Damper)

Jct	H Static In (Btu/lbm)	H Static Out (Btu/lbm)	Sonic Area (inches2)
53	206.0	206.0	0.9352
54	206.0	206.0	0.9379
55	289.9	289.9	N/A
60	206.1	206.1	0.0000
61	206.1	206.1	0.0000
X62	206.1	313.6	0.0000
63	313.6	313.6	0.0000
64	289.3	289.3	N/A
65	288.0	288.2	2.8338
66	287.2	287.0	2.8461
67	278.9	278.9	2.8463
68	277.6	277.6	2.8471
69	275.6	275.7	2.8439
70	275.0	275.0	2.8879
80	206.1	206.1	0.0000
81	206.1	206.1	0.0000
82	206.1	206.1	0.0000
X83	206.1	206.1	0.0000
84	206.1	206.1	0.0000
90	206.1	206.1	7.3009
91	206.0	206.0	7.3192
92	206.0	206.0	7.4159
93	206.0	206.0	N/A
94	206.0	206.0	N/A
100	206.1	206.1	9.4096
101	206.0	206.0	9.4282
102	206.0	206.0	9.4601
103	206.0	206.0	9.4554
200	206.1	206.1	0.0000
201	206.1	206.1	0.0000
X202	206.1	195.1	0.0000
203	195.1	195.1	N/A
204	195.1	195.1	N/A
210	206.1	206.1	0.0000
211	206.1	206.1	0.0000
212	206.1	206.1	0.0000
X213	206.1	195.1	0.0000
214	No Solution	No Solution	0.0000
215	No Solution	No Solution	0.0000
625	232.1	232.1	0.0000
631	232.1	232.1	0.0000
636	252.4	252.4	0.0000
637	206.1	206.1	2.5473
638	No Solution	No Solution	0.0000

Junction Loss Table

Jct	Pipe #	Pipe Dir.	dP Stag. Total (in. H2O std.)
16	P94	In	-0.09459
	P16	Out	0.000
	P70	In	0.2090
21	P21	Out	0.000
	P20	In	0.000

AFT Arrow 3.0 Output (13 of 13) 2/24/2006
DMJMH+N

AFT Arrow Model Main OGTS Case 4 (115°F, Heat Transfer, Dirty Filters, Backdraft Damper)

Jct	Pipe #	Pipe Dir.	dP Stag. Total (in. H2O std.)
	P204	In	0.000
25	P24	In	0.000
	P625	In	0.000
	P25	Out	-17.07
31	P30	In	0.000
	P31	Out	0.000
	P631	In	0.000
33	P32	In	0.02937
	P33	Out	0.000
	P103	In	0.5491
36	P35	In	0.000
	P36	Out	0.000
	P636	In	0.000
55	P9	In	0.1656
	P55	Out	0.000
	P54	In	-0.05159
64	P63	In	0.000
	P64	Out	0.000
	P55	In	0.5449
93	P92	In	-0.2251
	P93	Out	0.000
	P637	In	0.6539
94	P93	In	0.000
	P94	Out	0.000
	P84	In	0.000
203	P202	In	0.000
	P203	Out	0.000
	P638	In	0.000
204	P203	In	0.000
	P204	Out	0.000
	P215	In	0.000

DMJM H&N | AECOM

Attachment 3

Calculation No 145579-D-CA-061	**ORIGINATOR:** John Irwin **DATE:** 03-28-2006
Rev. No. : 0	
Calculation Title : DBVS OGTS Thermal Hydraulics Analysis	**CHECKER:** Jack McConwell **DATE:** 3-28-06

OGTS Fluid Flow Model Input Data

This page intentionally left blank.

Table 3-1. Main OGTS Ducting

	Component	Details	Size (in.)	Schedule	Inside Dia. (in.)	Length (in.)	Length (ft.)	ASHRAE Fitting No	ASHRAE Loss Coef.	Cv
ICV Outlet, Stream No. 13										
J6	ICV Outlet									
P6	Piping, 6-VOG-35-0217	6" Duct	6	40S	6.065	72.00		CD11-1	ARROW	
P6	Elbow	90° Elbow, R/D = 1.5	6	40S	6.065			CD3-1	0.0140	
J7	Reducer	5 x 6 Reducer, 11°	6 x 5	40S	6.065/5.047"	10.25		ARROW	ARROW	
P7	Expansion Joint, EJ-502	DME 5" size	5		4.9	26.625		CR6-3	0.270	
"	Piping, 5-VOG-35-0217	5" Duct	5	40S	5.295	24.000		CD11-1	ARROW	
"	Elbow	45° Elbow, R/D = 1.5	5	40S	5.295			CD3-3	0.090	
"	Piping, 5-VOG-35-0217	5" Duct	5	40S	5.295	93.500		CD11-1	ARROW	
P7	Elbow	45° Elbow, R/D = 1.5	5	40S	5.295			CD3-3	0.090	
					Total:	144.125	12.010	Total:	0.450	
J639	Reducer	5 x 6 Reducer, 11°	5 x 6	40S	5.047/6.065	10.25		ARROW	ARROW	
P639	Piping, 6-VOG-35-0217	6" Duct	6	40S	6.065	60.0		CD11-1	ARROW	
J8	Valve, HV-114	6" Keystone	6		5.8125			ARROW	ARROW	1194
P8	Piping, 6-VOG-35-0217	6" Duct	6	40S	6.065	27.5		CD11-1	ARROW	
P8	Expansion Joint, EJ-503	DME 6"	6		5.782	11		CR6-3	0.240	
					Total:	38.500	3.208	Total:	0.240	

Table 3-1. Main OGTS Ducting

	Component	Details	Size (in.)	Schedule	Inside Dia. (in.)	Length (in.)	Length (ft.)	ASHRAE Fitting No	ASHRAE Loss Coef.	Cv
J9	Valve, HV-115	6" Keystone	6		5.8125			ARROW	ARROW	1194
P9	Piping, 6-VOG-35-0217	6" Duct	6	40S	6.065	32		CD11-1	ARROW	
"	Elbow	45° Elbow, R/D = 1.5	6	40S	6.065			CD3-3	0.08	
"	Piping, 6-VOG-35-0217	6" Duct	6	40S	6.065	9		CD11-1	ARROW	
P9	Reducer	5 x 6 Reducer, 11°	6 x 5	40S	6.065/5.047"			ED4-1	0.090	
					Total:	41.000	3.417	Total:	0.170	
J55	Lateral	45° Lateral, Thru Flow	5	40S	5.047			ARROW	ARROW	
P55	Piping, 5-VOG-35-0217	5" Duct	5	40S	5.047	9.50		CD11-1	ARROW	
P55	Elbow	45° Elbow, R/D = 1.5	5	40S	5.047			CD3-3	0.08	
					Total:	9.500	0.792	Total:	0.080	
J64	Lateral	45° Lateral, Branch Flow	5	40S	5.047			ARROW	ARROW	
	(SMF #1 Inlet Header, See SMF)									
AWTE Outlet, Stream No. 13A										
J53	AWTE Outlet									
P53	Expansion Joint, EJ-407	DME 4"	4		4.025	26.625		CR6-3	0.320	
P53	Piping, 4-VOG-34-0212	4" Duct	4	40S	4.026	57		CD11-1	ARROW	
					Total:	83.625	6.969	Total:	0.320	
J54	Valve, HV-113	4" Keystone			3.875			ARROW	ARROW	425
P54	Piping, 4-VOG-34-0212	4" Duct	4	40S	4.026	36.5		CD11-1	ARROW	

Table 3-1. Main OGTS Ducting

	Component	Details	Size (in.)	Schedule	Inside Dia. (in.)	Length (in.)	Length (ft.)	ASHRAE Fitting No	ASHRAE Loss Coef.	Cv
"	Elbow	90° Elbow, R/D = 1.5	4	40S	4.026			CD3-1	0.2	
"	Piping, 4-VOG-34-0212	4" Duct	4	40S	4.026	244		CD11-1	ARROW	
"	Elbow	90° Elbow, R/D = 1.5	4	40S	4.026			CD3-1	0.2	
P54	Piping, 4-VOG-34-0212	4" Duct	4	40S	4.026	2.75		CD11-1	ARROW	
					Total:	283.250	23.604	Total:	0.400	
J55	Lateral	45° Lateral Tee, Branch Flow	4	40S	4.026			ARROW	ARROW	
Dried Waste Transfer Vacuum Pump Exhaust										
J637	Assigned flow from Dried Waste Transfer Vac. Pump	2682 Lbm/hr								
P637	Piping, 6-VOG-33-0201		6	40S	6.065	NA				
WRS Staging Tank Vent Stream No. 17										
J80	Atmospheric Junction									
P80	Inlet Pipe	1-1/2" Pipe	1-1/2	40S	1.61	6		CD11-1	ARROW	
J81	HEPA Filter, 32-N02-016B	Flanders, dP @ 1.3" w.c. (2.6" Dirty) at 40 acfm at -1.3" w.g., 0-007-1-12-RF-NU-00-E3-Z04059	6							
P81	Inlet Pipe	1-1/2" Pipe	1-1/2	40S	1.61	24		CD11-1	ARROW	
J82	Staging tank, 32-D74-016	Tank inlet and outlet Loss Coef.	Large						1.5	

Table 3-1. Main OGTS Ducting

	Component	Details	Size (in.)	Schedule	Inside Dia. (in.)	Length (in.)	Length (ft.)	ASHRAE Fitting No	ASHRAE Loss Coef.	Cv
P82	2-VOG-32-0113	2" Pipe	2	40S	2.067	18		CD11-1	ARROW	
					Total:	42.000	3.500	Total:	1.500	
xJ83	Iso Valve, 32-V-003	2" Ball	2	40S	2.067	3		ARROW	ARROW	
P83	2-VOG-32-0113	2" Pipe	2	40S	2.067	17		CD11-1	ARROW	
"	Elbow	90° Elbow, R/D = 1.5	2	40S	2.067			CD3-1	0.3	
"	2-VOG-32-0113	2" Pipe	2	40S	2.067	36		CD11-1	ARROW	
"	Elbow	90° Elbow, R/D = 1.5	2	40S	2.067			CD3-1	0.3	
"	2-VOG-32-0113	2" Pipe	2	40S	2.067	42		CD11-1	ARROW	
"	Tee	2" Flow-thru Tee	2	40S	2.067			ED5-3	1.92	
P83	2-VOG-32-0113	2" Pipe	2	40S	2.067	51		CD11-1	ARROW	
					Total:	149.000	12.417	Total:	2.520	
J84	Reducer	2" x 3" Reducer, 18°	2 x 3"	40S	2.067/3.068	3.5		ARROW	ARROW	
P84	Lateral	3" Flow-thru Lateral, 45°	3	40S	3.068			ED5-2	0.02	
"	3-VOG-32-0113	3" Pipe	3	40S	3.068	357		CD11-1	ARROW	
"	Elbow	90° Elbow, R/D = 1.5	3	40S	3.068			CD3-1	0.3	
"	3-VOG-32-0113	3" Pipe	3	40S	3.068	144		CD11-1	ARROW	
"	Elbow	90° Elbow, R/D = 1.5	3	40S	3.068			CD3-1	0.3	
"	3-VOG-32-0113	3" Pipe	3	40S	3.068	150		CD11-1	ARROW	
"	Elbow	45° Elbow, R/D =	3	40S	3.068			CD3-3	0.18	

Table 3-1. Main OGTS Ducting

	Component	Details	Size (in.)	Schedule	Inside Dia. (in.)	Length (in.)	Length (ft.)	ASHRAE Fitting No	ASHRAE Loss Coef.	Cv
		1.5								
"	3-VOG-32-0113	3" Pipe	3	40S	3.068	10		CD11-1	ARROW	
"	Elbow	45° Elbow, R/D = 1.5	3	40S	3.068			CD3-3	0.18	
"	3-VOG-32-0113	3" Pipe	3	40S	3.068	100		CD11-1	ARROW	
"	Elbow	90° Elbow, R/D = 1.5	3	40S	3.068			CD3-1	0.3	
P84	3-VOG-32-0113	3" Pipe	3	40S	3.068	43		CD11-1	ARROW	
J94	(Scrubber Inlet Header)				Total:	804.000	67.000	Total:	1.280	
Sec. Waste Storage Tank Vent, Stream No. 7D										
J210	Atmospheric Junction									
P210	Inlet Pipe	1-1/2" Pipe	1-1/2	40S	1.61	6		CD11-1	ARROW	
J211	HEPA Filter, 37-N02-014A	Flanders, dP @ 1.3" w.c. (2.6" Dirty) at 40 acfm at -1.3" w.g., 0-007-1-12-RF-NU-00-E3-Z04059	6							
P211	Inlet Pipe	1-1/2" Pipe	1-1/2	40S	1.61	20		CD11-1	ARROW	
J212	Storage Tank, 37-D74-010	1-1/2" Inlet to 2" Outlet	Large						1.5	
P212	2-VOG-37-0370	2" Pipe	2	40S	2.067	18		CD11-1	ARROW	
xJ213	Iso Valve, 37-V-004	2" Ball	2	40S	2.067			CD11-1	ARROW	
P213	2-VOG-37-0370	2" Pipe	2	40S	2.067	17		CD11-1	ARROW	
"	Elbow	90° Elbow, R/D = 1.5	2	40S	2.067			CD3-1	0.3	

Table 3-1. Main OGTS Ducting

	Component	Details	Size (in.)	Schedule	Inside Dia. (in.)	Length (in.)	Length (ft.)	ASHRAE Fitting No	ASHRAE Loss Coef.	Cv
"	2-VOG-37-0370	2" Pipe	2	40S	2.067	32.25		CD11-1	ARROW	
"	Elbow	45° Elbow, R/D = 1.5	2	40S	2.067			CD3-3	0.3	
"	2-VOG-37-0370	2" Pipe	2	40S	2.067	132.5		CD11-1	ARROW	
"	Elbow	90° Elbow, R/D = 1.5	2	40S	2.067			CD3-1	0.3	
					Total:	181.750	15.146	Total:	0.900	
J214	Reducer	2" x 3" std reducer, 18°	2 x 3"	40S	2.067/3.068	3.5		ARROW	ARROW	
P214	3-VOG-37-0370	3" Pipe	3	40S	3.068	157.5		CD11-1	ARROW	
"	Lateral	45° Lateral, Flow-thru	3	40S	3.068	20		ED5-2	0.02	
"	3-VOG-37-0370	3" Pipe	3	40S	3.068	136		CD11-1	ARROW	
					Total:	313.500	26.125	Total:	0.020	
J215	Reducer	3" x 4" std reducer, 14°	3	40S	3.068/4.026	4		ARROW	ARROW	
P215	Lateral	45° Lateral, Flow-thru	4	40S	4.026	20		ED5-2	0.02	
"	4-VOG-37-0370	4" Pipe	4	40S	4.026	134		CD11-1	ARROW	
"	Lateral	45° Lateral, Flow-thru	4	40S	4.026	20		ED5-2	0.02	
"	Elbow	45° Elbow, R/D = 1.5	4	40S	4.026			CD3-3	0.13	
"	4-VOG-37-0370	4" Pipe	4	40S	4.026	24		CD11-1	ARROW	
"	Elbow	45° Elbow, R/D = 1.5	4	40S	4.026			CD3-3	0.13	

Table 3-1. Main OGTS Ducting

	Component	Details	Size (in.)	Schedule	Inside Dia. (in.)	Length (in.)	Length (ft.)	ASHRAE Fitting No	ASHRAE Loss Coef.	Cv
"	4-VOG-37-0370	4" Pipe	4	40S	4.026	728.5		CD11-1	ARROW	
"	Elbow	90° Elbow, R/D = 1.5	4	40S	4.026			CD3-1	0.2	
"	4-VOG-37-0370	4" Pipe	4	40S	4.026	93.5		CD11-1	ARROW	
"	Elbow	90° Elbow, R/D = 1.5	4	40S	4.026			CD3-1	0.2	
"	4-VOG-37-0370	4" Pipe	4	40S	4.026	15		CD11-1	ARROW	
"	Elbow	90° Elbow, R/D = 1.5	4	40S	4.026			CD3-1	0.2	
P215	4-VOG-37-0370	4" Pipe	4	40S	4.026	11		CD11-1	ARROW	
J203	(Wet Scrubber Air Dilution Connection)				Total:	1046.000	87.167	Total:	0.900	

Table 3-2. Main OGTS Inlet Filters

	Component	Details	Size (in.)	Schedule	Inside Dia. (in.)	Length (in.)	Length (ft.)	ASHRAE Fitting No	ASHRAE Loss Coef.	Cv
AWTE HEPA filter, 34-N02-026, Stream No. 9A										
J50	Atmospheric Junction									
P50	Inlet Housing and screen	16" square Intake with birdscreen (60% open), S.Stl	16 x 16		17.49			CR6-1/ER3-1	2.12	
"	Sudden Contraction	16" square x 4" Dia	16 x 4	40S	4.026			ED1-1	0.5	
"	Inlet Piping, 4-AA-34-0213	4" straight duct, S.Stl	4	40S	4.026	74		CD11-1	ARROW	
"	Elbow	90° Elbow, R/D = 1.5, S.Stl	4	40S	4.026			CD3-1	0.2	
"	Inlet Piping, 4-AA-34-0213	4" straight duct, S.Stl	4	40S	4.026	57		CD11-1	ARROW	
P50	Inlet Transition	Flanders, Sudden Expansion, 4 x 12, 180°			4.026/12.0 SQ			ED4-2	0.34	
					Total:	131.000	10.917	Total:	3.160	
J51	HEPA Filter, 34-N02-026 Pre	Flanders, dP @ 0.12" w.c. (0.24" Dirty) at 250 acfm	12 x 12 x 2" Lg			2				
J51	HEPA Filter, 34-N02-026	Flanders, dP @ 1.3" w.c. (2.6" Dirty) at 250 acfm, P-007-W-42-N2-NU-51-21-CC-FU5, 4" RF Flange	12 x 12 x 12" Lg		4	11				

Table 3-2. Main OGTS Inlet Filters

	Component	Details	Size (in.)	Schedule	Inside Dia. (in.)	Length (in.)	Length (ft.)	ASHRAE Fitting No	ASHRAE Loss Coef.	Cv
		Interface								
		Total Pressure drop at 250 cfm	1.42	clean	Total:	13.0000		Total:	0.0000	
			2.84	dirty		1.083		ft		
P51	Outlet Transition	Flanders, Sudden Contraction, 12 x 4, 180°			12.0 SQ/4.26 Rnd			ED1-1	0.5	
"	Outlet Piping, 4-AA-34-0213	4" straight duct, S.Stl	4	40S	4.026	12.25		CD11-1	ARROW	
"	Elbow	90° Elbow, R/D = 1.5, S.Stl	4	40S	4.026			CD3-1	0.2	
P51	Outlet Piping, 4-AA-34-0213	4" straight duct, S.Stl	4	40S	4.026	21.625		CD11-1	ARROW	
					Total:	33.875		Total:	0.700	
						2.823		ft		
J52	Iso Valve, HV-111	4" Keystone	4		3.875			ARROW	ARROW	425
P52	Outlet Piping, 4-AA-34-0213	4" straight duct, S.Stl	4	40S	4.026	20.5		CD11-1	ARROW	
P52	Expansion Joint, EJ-406	DME 4"	4	40S	4.025	26.625		CR6-3	0.320	
J53	AWTE Room	AWTE K = 1.5 (Inlet and Exit)			Total:	47.125	3.927	Total:	0.320	
ICV Box Plenum HEPA filter, 35-N02-010, Stream No. 9										
J1	Atmospheric Junction									
P1	Inlet Housing and screen	16" square Intake	16 x		17.49			CR6-	2.12	

Table 3-2. Main OGTS Inlet Filters

	Component	Details	Size (in.)	Schedule	Inside Dia. (in.)	Length (in.)	Length (ft.)	ASHRAE Fitting No	ASHRAE Loss Coef.	Cv
		with birdscreen, (60% open) S.Stl	16					1/ER3-1		
"	Inlet Piping, 6-AA-35-0218	6" straight duct, S.Stl	6	40S	6.065	64.000		CD11-1	ARROW	
P1	N02-010 Inlet Transition	Flanders, Sudden Expansion, 6 dia x 12 dia, 180°	6	40S	6.065/12.0 SQ	0.000		ED4-2	0.81	
					Total:	64.000	5.333	Total:	2.930	
J2	HEPA Filter, 35-N02-010 Pre	Flanders, 0.12" w.c. (0.24" Dirty) at 500 cfm				2.000				
J2	HEPA Filter, 35-N02-010	Flanders, 1.0" w.c. (2.0" Dirty) at 500 cfm, P-007-W-43-N2-NU-51-23-GG-DU5	24 x 24 x 16		12	5.875				
		Total Pressure drop at 500 cfm	1.12	clean	Total:	7.875	0.656	Total:	0.000	
			2.24	dirty						
P2	Outlet Transition	Flanders, Sudden Contraction, 24 x 6			12.0 SQ/6.065 Rnd			ED1-1	0.500	
"	Piping, 6-AA-35-0218	6" straight duct, S.Stl	6	40S	6.065	42.000		CD11-1	ARROW	
"	Elbow No. 1	90° Elbow, R/D = 1.5, S.Stl	6	40S	6.065			CD3-1	0.130	
"	Piping, 6-AA-35-0218	6" straight duct, S.Stl	6	40S	6.065	62.000		CD11-1	ARROW	
"	Elbow No. 2	45° Elbow, R/D =	6	40S	6.065			CD3-3	0.080	

Table 3-2. Main OGTS Inlet Filters

	Component	Details	Size (in.)	Schedule	Inside Dia. (in.)	Length (in.)	Length (ft.)	ASHRAE Fitting No	ASHRAE Loss Coef.	Cv
		1.5, S.Stl								
					Total:	104.000	8.667	Total:	0.710	
J3	Reducer	6" x 4", 22°	6 x 4	40S	6.065/4.026"	5.500		ARROW	ARROW	
P3	Piping, 4-AA-35-0218	4" straight duct, S.Stl	4	40S	4.026	163.000		CD11-1	ARROW	
"	Flowmeter	3 ea Size 1 Annubar flowmeter	4		4.026			Vendor	1.635	
					Total:	177.167	14.764	Total:	1.855	
J4	Reducer	6" x 4", 22°	4 x 6	40S	4.026/6.065"	5.500		ARROW	ARROW	
P4	Elbow No. 3	45° Elbow, R/D = 1.5, S.Stl	6	40S	6.065			CD3-3	0.080	
"	Piping, 6-AA-35-0218	6" straight duct, S.Stl	6	40S	6.065	12.000		CD11-1	ARROW	
"	Elbow No. 4	90° Elbow, R/D = 1.5, S.Stl	6	40S	6.065			CD3-1	0.014	
"	Piping, 6-AA-35-0218	6" straight duct, S.Stl	6	40S	6.065	12.000		CD11-1	ARROW	
"	Elbow No. 5	90° Elbow, R/D = 1.5, S.Stl	6	40S	6.065			CD3-1	0.014	
P4	Piping, 6-AA-35-0218	6" straight duct, S.Stl	6	40S	6.065	38.000		CD11-1	ARROW	
					Total	62.000	5.167	Total:	0.358	

Table 3-2. Main OGTS Inlet Filters

	Component	Details	Size (in.)	Schedule	Inside Dia. (in.)	Length (in.)	Length (ft.)	ASHRAE Fitting No	ASHRAE Loss Coef.	Cv
J5	Reducer	6" x 4", 22°	6 x 4	40S	6.065/4.026"	5.500		ARROW	ARROW	
P5	Expansion Joint, EJ-501	DME 4"	4		4.025	26.625		CR6-3	0.32	
J6	ICV Box CP	ICV Box K = 1.5 (Inlet and exit)								
Tempering Air Vent at Sintered Metal Filter Inlet, Stream No. 14										
J60	Atmospheric Junction									
P60	Inlet Housing and screen	16" square Intake with birdscreen, (60% open) S.Stl	16 x 16		17.49			CR6-1/ER3-1	2.12	
"	Inlet Piping, 8-AA-36-0322	8" straight duct, S.Stl	8	10S	8.329	100		CD11-1	ARROW	
"	Reducer	8 x 12 Reducer, 28.5°	8 x 12	10S	8.329/12.39"	20		ED4-1	0.33	
P60	Inlet Transition	Sudden Expansion	12	10S	12" Rnd/24.0 SQ	0		ED4-2	0.72	
					Total:	120.000	10.000	Total:	3.170	
J61	HEPA Filter, 36-N02-049, Pre	Flanders, dP @ 0.12" w.c. (0.24" Dirty) at 1000 acfm				2				
J61	HEPA Filter, 36-N02-049	Flanders, dp @ 1.0" w.c. (2.0" Dirty) at 1000 acfm, P-007-W-42-N2-NU-51-21-GG-FU5, 12" RF Flange Interface	24 x 24 x 30		12	11				

Table 3-2. Main OGTS Inlet Filters

	Component	Details	Size (in.)	Schedule	Inside Dia. (in.)	Length (in.)	Length (ft.)	ASHRAE Fitting No	ASHRAE Loss Coef.	Cv
	Note: Filter is depicted as 12"sq x 30" lg	Total Pressure drop at 1000 cfm	1.12	clean	Total:	13.000	1.083	Total:	0.000	
			2.24	dirty						
P61	Outlet Transition	Sudden Contraction			24.0 SQ/ 12 Rnd			ED1-1	0.5	
"	Reducer	12 x 6 Reducer, 41.32°	12 x 6	40S	12.39/6.065	30		ED4-1	0.76	
"	Outlet Piping, 6-AA-36-0322	6" straight duct, S.Stl	6	40S	6.065	44		CD11-1	ARROW	
P61	45° Wye	45° Wye, one branch closed	6	40S	6.065	17		SD5-1	0.38	
					Total:	91.000	7.583	Total:	1.350	
xJ62	Isolation Valve, TV-014	6" Keystone	6		5.8125			ARROW	ARROW	155
P62	45° Wye	45° Wye, one branch closed	6	40S	6.065	17		ED5-1	0.07	
"	Outlet Piping, 6-AA-36-0322	6" straight duct, S.Stl	6	40S	6.065	70		CD11-1	ARROW	
"	Elbow, 2 ea.	90° Elbow, R/D = 1.5, S.Stl	6	40S	6.065			CD3-1	0.28	
P62	Outlet Piping, 6-AA-36-0322	6" straight duct, S.Stl	6	40S	6.065	104.5		CD11-1	0.130	
					Total:	191.500	15.958	Total:	0.200	
J63	Reducer	6" x 5" Reducer, 11°	6 x 5	40S	6.065/5.047	5		ARROW	ARROW	
P63	Elbow	90° Elbow, R/D =	5	40S	5.047			CD3-1	0.15	

Table 3-2. Main OGTS Inlet Filters

	Component	Details	Size (in.)	Schedule	Inside Dia. (in.)	Length (in.)	Length (ft.)	ASHRAE Fitting No	ASHRAE Loss Coef.	Cv
		1.5, S.Stl								
"	Lateral Tee	45° Lateral Flow Thru	5	40S	5.047	18		ED5-2	0.02	
"	Straight Tee	5" Flow Thru	5	40S	5.047	14		ED5-3	0.48	
"	Outlet Piping, 5-AA-36-0217	5" straight duct, S.Stl	5	40S	5.047	9.75		CD11-1	ARROW	
P63	Reducer	6" x 5" Reducer, 11°	5 x 6	40S	5.047/6.065	5		ED4-1	0.09	
J64	Lateral Tee at SMF				Total:	46.750	3.896	Total:	0.740	
Tempering Air Vent at Wet Scrubber Inlet, Stream No. 16A										
J90	Atmospheric Junction									
P90	Inlet Elbow and screen	45° Elbow with birdscreen (60% Open), R/D = 1.5, S.Stl	12	10S	12.39			CD6-1/CD3-14	1.08	
"	Inlet Elbow	90° Elbow, R/D = 1.5, S.Stl	12	10S	12.39			CD3-9	0.18	
"	Inlet Piping, 12-AA-36-0323	12" straight duct, S.Stl	12	10S	12.39	48		CD11-1	ARROW	
"	Inlet Elbow	90° Elbow, R/D = 1.5, S.Stl	12	10S	12.39			CD3-9	0.18	
"	90° Wye	90° Wye, one branch closed	12	10S	12.39	30		ED5-6	0.64	
P90	Inlet Transition	Flanders 12" Dia x 24" SQ, S.Stl, Sudden Expansion						ED4-2	0.73	
					Total:	78.000	6.500	Total:	2.810	

Table 3-2. Main OGTS Inlet Filters

	Component	Details	Size (in.)	Schedule	Inside Dia. (in.)	Length (in.)	Length (ft.)	ASHRAE Fitting No	ASHRAE Loss Coef.	Cv
J91	HEPA Filter, 36-N02-101/102, Pre	Flanders, dP @ 0.12" w.c. (0.24" Dirty) at 1000 acfm				2				
J91	HEPA Filter, 36-N02-101/102	Flanders, dP @ 1.0" w.c. (2.0" Dirty) at 1000 acfm, P-007-W-42-N2-NU-51-21-GG-FU5, 12" RF Flange Interface	24 x 24 x 22		12	11				
		Total Pressure drop at 1000 cfm	1.12	clean	Total:	13.000	1.083	Total:	0.000	
	Note: One physical filter is modeled to represent two in parallel,		2.24	dirty						
P91	Outlet Transition	Flanders 12" Dia x 24" SQ, S.Stl, Sudden Contraction						ED1-1	0.5	
"	90° Wye	90° Wye, one branch closed	12	10S	12.39	30		ED5-1	0.24	
"	Inlet Piping, 12-AA-36-0323	12" straight duct, S.Stl	12	10S	12.39	20		CD11-1	ARROW	
P91	90° Wye	90° Wye, one branch closed	12	10S	12.39	30		ED5-6	0.64	
					Total:	80.000	6.667	Total:	1.380	

Table 3-2. Main OGTS Inlet Filters

	Component	Details	Size (in.)	Schedule	Inside Dia. (in.)	Length (in.)	Length (ft.)	ASHRAE Fitting No	ASHRAE Loss Coef.	Cv
J92	FCV, FV-016	12" Keystone	12		11.375			ARROW	ARROW	6915
P92	90° Wye	90° Wye, one branch closed	12	10S	12.39	30		ED5-6	0.64	
"	Outlet Piping, 12-AA-36-0323	12" straight duct, S.Stl	12	10S	12.39	8		CD11-1	ARROW	
"	Outlet Elbow	90° Elbow, R/D = 1.5, S.Stl	12	10S	12.39			CD3-9	0.18	
"	Outlet Piping, 12-AA-36-0323	12" straight duct, S.Stl	12	10S	12.39	38.5		CD11-1	ARROW	
"	Outlet Elbow	90° Elbow, R/D = 1.5, S.Stl	12	10S	12.39			CD3-9	0.18	
P92	Outlet Piping, 12-AA-36-0323	12" straight duct, w 3" and 6" Flow Thru Lateral, S. Stl.	12	10S	12.39	7.5		CD11-1	ARROW	
					Total:	84.000	7.000	Total:	1.020	
J93	12" x 6" Flow Thru Lateral	12" x 6" Flow Thru Lateral, 45°	12	10S	12.39			ARROW	ARROW	
WSS Condenser Inlet, Stream No. 7C										
J200	Atmospheric Junction									
P200	Inlet Transition	24" Sq x 12" Dia with screen at 60% open			12.39	20		CR6-1	0.06	
P200	Sudden Expansion	Flanders 12" Dia x 24" SQ, S.Stl, Sudden Expansion	12 x 24		12.39			ED4-2	0.73	

Table 3-2. Main OGTS Inlet Filters

	Component	Details	Size (in.)	Schedule	Inside Dia. (in.)	Length (in.)	Length (ft.)	ASHRAE Fitting No	ASHRAE Loss Coef.	Cv
					Total:	20.000	1.667	Total:	0.790	
J201	HEPA Filter, 36-N02-093 Pre	Flanders, 0.12" w.c. (0.24" Dirty) at 200 acfm				2				
J201	HEPA Filter, 36-N02-093	Flanders, 1.0" w.c. (2.0" Dirty) at 200 acfm, P-007-W-42-N2-NU-51-21-GG-DU5, 12" RF Flange Interface	24 x 24 x 16	NA	12	4				
		Total Pressure drop at 200 cfm	1.12	clean	Total:	6.000	0.500	Total:	0.000	
			2.24	dirty						
P201	Sudden contraction	Flanders 12" Dia x 24" SQ, S.Stl, Sudden Contraction	24 x 12		12.39			ED1-1	0.5	
P201	Reducer	12" x 6" Reducer, 41.5°	12 x 6"	40S	12.390/6.065	10.5		ED4-1	0.76	
					Total:	10.500	0.875	Total:	1.260	
xJ202	Flow Control Valve, FV-331	6" Keystone	6	40S	5.8125			ARROW	ARROW	22
P202	Outlet Piping, 6-AA-36-0237	6" straight duct, C. Stl	6	40S	6.065	6		CD11-1	ARROW	
					Total:	6.000	0.500	Total:	0.000	

Table 3-2. Main OGTS Inlet Filters

	Component	Details	Size (in.)	Schedule	Inside Dia. (in.)	Length (in.)	Length (ft.)	ASHRAE Fitting No	ASHRAE Loss Coef.	Cv
J203	45° Lateral	45° Lateral, Flow Thru, 6 x 6	6	40S	6.065	17		ARROW	ARROW	
P203	Outlet Piping, 6-AA-36-0237	6" straight duct, C. Stl	6	40S	6.065	7		CD11-1	ARROW	
P203	Outlet Elbow	90° Elbow, R/D = 1.5, C.Stl	6	40S	6.065			CD3-9	0.14	
					Total:	17.000	1.417	Total:	0.330	
J204	45° Lateral	45° Lateral 6 x 4 x 8, Flow thru	4x 6 x 8"	40S	6.065/8.329	10		ARROW	ARROW	
xP204	Outlet Piping, 8-AA-36-0237	8" Straight duct	8"	10S	8.329	20		CD11-1	ARROW	
"	90 Elbow	90° Elbow, R/D = 1.5, C.Stl	8"	10S	8.329			CD3-9	0.14	
"	Pipe	8" Straight duct	8"	10S	8.329	42		CD11-1	ARROW	
"	90 Elbow	90° Elbow, R/D = 1.5, C.Stl	8"	10S	8.329			CD3-9	0.14	
xP204	Straight Tee at WSS Condenser Inlet	16 x 16 x 8 Straight Tee, branch flow	16 x 16 x 8	10S	8.329			ED5-3	0.530	
J21	WSS Tee (See WSS)				Total:	62.000	5.167	Total:	0.810	
xJ638	Assigned flow from Waste Dryer Vac. Pump Stream 7	42 Lbm/hr (no flow during normal operation)								
xP638	Piping, 6-VOG-33-0155	6" straight duct, C. Stl	6	40S	6.065	6		CD11-1	ARROW	
J204	45° Lateral (See above)									

Table 3-2. Main OGTS Inlet Filters

	Component	Details	Size (in.)	Schedule	Inside Dia. (in.)	Length (in.)	Length (ft.)	ASHRAE Fitting No	ASHRAE Loss Coef.	Cv
Tempering Air Vent at SCR Inlet, Stream No. 39										
J100	Atmospheric Junction									
P100	Inlet Elbow and screen	45° Elbow with birdscreen (60% Open), R/D = 1.5, C.Stl	14	10S	13.624			CD6-1/CD3-14	1.08	
"	Inlet Elbow	90° Elbow, R/D = 1.5, C.Stl	14	10S	13.624			CD3-9	0.17	
"	Inlet Piping, 14-AA-36-0275	14" straight duct (3'-4"L), C.Stl	14	10S	13.624	32		CD11-1	ARROW	
"	Inlet Elbow	90° Elbow, R/D = 1.5, C.Stl	14	10S	13.624			CD3-9	0.17	
P100	Inlet Transition	Flanders 14" Dia x 48" H x 24" W, S.Stl	14	10S	13.624	18.5		ED4-2	0.55	
					Total:	50.500	4.208	Total:	1.970	
J101	Medium Effeciency Pre-Filter, 36-N02-022	Flanders, dP @ 0.2" w.c. (0.4" Dirty) at 2000 acfm, Pre-Pleat 40 (2 ea filters in parallel, 0.2" w.c. at 4000 acfm)	24 x 48 x 2			2				
J101	Medium Effeciency Filter, 36-N02-022	Flanders, dP @ 0.5" w.c. (1.0" Dirty) at 2000 acfm, PCEL-85-4412H-GD-FD (2	24 x 48 x 12			12				

Table 3-2. Main OGTS Inlet Filters

	Component	Details	Size (in.)	Schedule	Inside Dia. (in.)	Length (in.)	Length (ft.)	ASHRAE Fitting No	ASHRAE Loss Coef.	Cv
		ea filters in parallel, 0.5" w.c. at 4000 acfm),								
		Total Pressure drop at 4000 cfm	0.7	clean	Total:	14.000	1.167	Total:	0.000	
			1.4	dirty						
P101	Outlet Transition	Sudden Contraction, Flanders 14" Dia x 24" x 48", S.Stl	24 x 48 x 14	10S	13.624	18.5		ED1-1	0.5	
J102	FCV, HV-504	14" Keystone	14		12.5			ARROW	ARROW	8300
P102	Outlet Piping, 14-AA-36-0275	14" straight duct at 8" L, C.Stl	14	10S	13.624	8		CD11-1	ARROW	
J103	Isolation Valve, 36-V-019	14" Keystone	14	10S	13.624			ARROW	ARROW	8300
P103	Outlet Piping, 14-AA-36-0275	14" straight duct	14	10S	13.624	6		CD11-1	ARROW	
P103	Outlet Elbow	90° Elbow, R/D = 1.5, C.Stl	14	10S	13.624			CD3-9	0.17	
P103	Outlet Piping, 14-AA-36-0275	14" straight duct	14	10S	13.624	36		CD11-1	ARROW	
J33	Lateral Tee into 22-VOG-36-0273	45° Lateral, 14" x 16 x 20", Branch Flow into Main flow @3250 cfm	14	10S	13.624	17.5		ED5-1	0.12	
					Total:	59.500	4.958	Total:	0.290	

Table 3-3. Main OGTS Sintered Metal Filters

	Component	Details	Size (in.)	Schedule	Inside Dia. (in.)	Length (in.)	Length (ft.)	ASHRAE Fitting No	ASHRAE Loss Coef.	Cv
SMF Assembly										
P64	Inlet Piping	5" Sch 40 Pipe, with 5 x 6 Reducer and flow thru Tee	5	40S	5.047	24		CD11-1	ARROW	
J65	Isolation Valve, HV-002	6" Keystone	6		5.8125			ARROW	ARROW	1194
P65	Reducer	10 x 6 Std Reducer, 32.4°	6 x 10	40S	6.065/10.42	10		ED4-1	0.4	
P65	Inlet Piping	10" Sch 10 Pipe, 316L S.Stl	10	10S	10.42	8		CD11-1	ARROW	
					Total:	18.000	1.500	Total:	0.400	
J66	Inlet Sudden Expanson	10 x 26	10	10S	10.42			ED4-1	0.73	
J66	Tank 1 Flow	Tank ID is 25.376"	26	10S	25.376	36		CD11-1	ARROW	
J66	Filter Elements, N02-019	Microfiltrex sintered metal 3.2 in w.c. dP (6.4" Dirty) at 1000 acfm Ref. Microfilterx Drawing MN0900188	26		25.376					
J66	Outlet Sudden Contraction	26 x 10	26	10S	25.376			ED1-1	0.5	
P66	Outlet Piping	10" Sch 10 Pipe, 316L S.Stl	10	10S	10.42	8		CD11-1	ARROW	
"	Reducer	10 x 6 Std Reducer,	10 x	40S	10.42/6.065	7		ED4-1	0.37	

Table 3-3. Main OGTS Sintered Metal Filters

	Component	Details	Size (in.)	Schedule	Inside Dia. (in.)	Length (in.)	Length (ft.)	ASHRAE Fitting No	ASHRAE Loss Coef.	Cv
		32.4°	6							
"	Interconnecting Piping	6" Sch 40 Pipe, 316L S.Stl	6	40S	6.065	6		CD11-1	ARROW	
"	Expansion Joint EJ-602	6" DME	6		5.9	11		CR6-3	0.24	
P66	Interconnecting Piping	6" Sch 40 Pipe, 316L S.Stl	6	40S	6.065	120		CD11-1	ARROW	
					Total:	152.000	12.667	Total:	0.610	
J67	Isolation Valve, HV-003	6" Keystone	6	40S	5.8125			ARROW	ARROW	1194
P67	6" 90° Elbow	90° Elbow, R/D = 1.5, S.Stl	6	40S	6.065			CD3-1	0.130	
"	6" Interconnecting Piping	6" Sch 40 Pipe, 316L S.Stl	6	40S	6.065	12		CD11-1	ARROW	
"	6" Straight Tee	6" Straight Tee, Flow through	6	40S	6.065			ED5-3	0.020	
"	6" Interconnecting Piping	6" Sch 40 Pipe, 316L S.Stl	6	40S	6.065	12		CD11-1	ARROW	
P67	6" 90° Elbow	90° Elbow	6	40S	6.065			CD3-1	0.13	
					Total:	24.000	2.000	Total:	0.280	
J68	Isolation Valve, HV-004	6" Keystone	6	40S	5.8125			ARROW	ARROW	1194
P68	Interconnecting Piping	6" Sch 40 Pipe, 316L S.Stl	6	40S	6.065	12		CD11-1	ARROW	
"	Expansion Joint EJ-603	6" DME	6	40S	5.9	11		CR6-3	0.24	
"	Reducer	10 x 6 Std Reducer, 32.4°	6 x 10	40S	6.065/10.42	10		ED4-1	0.4	

Table 3-3. Main OGTS Sintered Metal Filters

	Component	Details	Size (in.)	Schedule	Inside Dia. (in.)	Length (in.)	Length (ft.)	ASHRAE Fitting No	ASHRAE Loss Coef.	Cv
P68	Inlet Piping	10" Sch 10 Pipe, 316L S.Stl	10	10S	10.42	8		CD11-1	ARROW	
					Total:	41.000	3.417	Total:	0.640	
J69	Inlet Sudden Expanson	10 x 26	10	10S	10.42			ED4-1	0.73	
J69	Tank 2 Flow	Tank ID is 25.376"	26	10S	25.376	36		CD11-1	ARROW	
J69	Filter Elements, N02-020	Microfiltrex sintered metal 3.2 in w.c. dP (6.4" Dirty) at 1000 acfm Ref. Microfilterx Drawing MN0900188	26		25.376			Vendor	Vendor	
J69	Outlet Sudden Contraction	26 x 10	26	10S	25.376			ED1-1	0.5	
P69	Outlet Piping	10" Sch 10 Pipe, 316L S.Stl	10	10S	10.42	8		CD11-1	ARROW	
"	Reducer	10 x 8 Std Reducer, 17°	10 x 8	10S	10.42/8.329	7		ED4-1	0.11	
P69	Elbow	90° Elbow, R/D = 1.5	8	10S	8.329			CD3-1	0.11	
					Total:	15.000	1.250	Total:	0.220	
J70	Isolation Valve, HV-005	8" Keystone	8		7.625			ARROW	ARROW	2440
P70	Piping, 8-VOG-36-0306	8" Duct	8	10S	8.329	29.5		CD11-1	ARROW	
"	Elbow	45° Elbow, R/D = 1.5	8	10S	8.329			CD3-3	0.07	
"	Piping, 8-VOG-36-0306	8" Duct	8	10S	8.329	66.5		CD11-1	ARROW	

Table 3-3. Main OGTS Sintered Metal Filters

	Component	Details	Size (in.)	Schedule	Inside Dia. (in.)	Length (in.)	Length (ft.)	ASHRAE Fitting No	ASHRAE Loss Coef.	Cv
"	Tee	8" Straight Tee, Flow thru	8	10S	8.329			ED5-3	1.92	
"	Piping, 8-VOG-36-0306	8" Duct	8	10S	8.329	156		CD11-1	ARROW	
"	Elbow	90° Elbow, R/D = 1.5	8	10S	8.329			CD3-1	0.11	
"	Piping, 8-VOG-36-0306	8" Duct	8	10S	8.329	53.625		CD11-1	ARROW	
"	Elbow	45° Elbow, R/D = 1.5	8	10S	8.329			CD3-3	0.07	
"	Piping, 8-VOG-36-0306	8" Duct	8	10S	8.329	103.25		CD11-1	ARROW	
"	Elbow	90° Elbow, R/D = 1.5	8	10S	8.329			CD3-1	0.11	
P70	Piping, 8-VOG-36-0306	8" Duct	8	10S	8.329	118.25		CD11-1	ARROW	
					Total:	527.125	43.927	Total:	2.300	
J16	Lateral	45° Lateral Tee, Branch Flow	8	10S	8.329			ARROW	ARROW	

Table 3-4. Main OGTS Wet Scrubber Skid

	Component	Details	Size (in.)	Schedule	Inside Dia. (in.)	Length (in.)	Length (ft.)	ASHRAE Fitting No	ASHRAE Loss Coef.	Cv
Wet Scrubber Inlet, Stream No. 19										
J93	WSS Air Dilution Filter and Dryer Waste Receivers	45° Lateral, 12 x 12 x 6, Flow thru	12 x 12 x 6	10S	12.39			ARROW	ARROW	
P93	Pipe	12" Sch 10 Pipe, 316L S.Stl	12	10S	12.39	6.00		CD11-1	ARROW	
J94	WSS Air Dilution Filter and LAW Staging Tank Vent Lateral	45° Lateral, 12 x 12 x 3, Flow thru	12 x 12 x 3	10S	12.39			ARROW	ARROW	
P94	Pipe	12" Sch 10 Pipe, 316L S.Stl	12	10S	12.39	23.00		CD11-1	ARROW	
J16	WSS Air Dilution Filter and SMF Outlet	45° Lateral, 16 x 12 x 3, Flow thru	16 x 12 x 3	10S	15.624			ARROW	ARROW	
P16	Pipe	16" Sch 10 Pipe, 316L S.Stl	16	10S	15.624	28.00		CD11-1	ARROW	
"	Elbow	90° - Std Radius	16	10S	15.624			CD3-9	0.155	
"	Pipe	16" Sch 10 Pipe, 316L S.Stl	16	10S	15.624	33.00		CD11-1	ARROW	
"	Elbow	90° - Std Radius	16	10S	15.624			CD3-9	0.155	
P16	Pipe	16" Sch 10 Pipe, 316L S.Stl	16	10S	15.624	120.00		CD11-1	ARROW	
					Total:	181.000	15.083	Total:	0.310	
Wet Scrubber System										
J17	Butterfly Valve, 36-V-049	16" Keystone	16		14.3125			ARROW	ARROW	10040

Table 3-4. Main OGTS Wet Scrubber Skid

	Component	Details	Size (in.)	Schedule	Inside Dia. (in.)	Length (in.)	Length (ft.)	ASHRAE Fitting No	ASHRAE Loss Coef.	Cv
P17	Flange	150#	16	10S	15.624	5.04		NA		
P17	Pipe	16" Sch 10 Pipe, 316L S.Stl	16	10S	15.624	18.00		CD11-1	ARROW	
P17	Flange	150#	16	10S	15.624	5.04		NA		
J18	Butterfly Valve, HV-125	16" Keystone	16		14.3125			ARROW	ARROW	10040
					Total:	28.080	2.34	Total:	0.000	
P18	Flange	150#	16	10S	15.624	5.04		NA	0.00	
P18	Expansion Joint	DME 16"	16		15.15	8.00		CR6-3	0.11	
P18	Pipe	16" Sch 10 Pipe, 316L S.Stl	16	10S	15.624	12.00		CD11-1	ARROW	
					Total:	25.040	2.09	Total:	0.110	
J19	Packed tower	3.83" w.c. @ 3133 acfm, quadratic						ARROW	ARROW	
P19	Pipe	16" Sch 10 Pipe, 316L S.Stl	16	10S	15.624	6.00		CD11-1	ARROW	
P19	Expansion Joint	DME 16"	16		15.15	8.00		CR6-3	0.11	
P19	Pipe	16" Sch 10 Pipe, 316L S.Stl	16	10S	15.624	6.00		CD11-1	ARROW	
P19	Elbow	45° - LR	16	10S	15.624	0.00		CD3-7	0.15	
P19	Pipe	16" Sch 10 Pipe, 316L S.Stl	16	10S	15.624	3.00		CD11-1	ARROW	
					Total:	24.917	2.08	Total:	0.260	
J20	Venturi	D1 = 16", D2 = 5.625", 33" w.c. @ 3149 acfm, quadratic						ARROW	ARROW	

Table 3-4. Main OGTS Wet Scrubber Skid

	Component	Details	Size (in.)	Schedule	Inside Dia. (in.)	Length (in.)	Length (ft.)	ASHRAE Fitting No	ASHRAE Loss Coef.	Cv
J20	Pipe	16" Sch 10 Pipe, 316L S.Stl	16	10S	15.624	12.00		CD11-1	ARROW	
J20	Scrub Tank/Demister	2.21 @ 3514 acfm, quadratic						ARROW	ARROW	
P20	Pipe	16" Sch 10 Pipe, 316L S.Stl	16	10S	15.624	12.00		CD11-1	ARROW	
P20	Expansion Joint	DME 16"	16		15.15	8.00		CR6-3	0.11	
					Total:	32.000	2.67	Total:	0.110	
	Bleed Air									
J21	Tee	Flow through	16	10S	15.624	0.00		ARROW	ARROW	
P21	Expansion Joint	DME 16"	16		15.15	8.00		CR6-3	0.11	
P21	Pipe	16" Sch 10 Pipe, 316L S.Stl	16	10S	15.624	12.00		CD11-1	ARROW	
					Total:	20.000	1.67	Total:	0.140	
J22	Expansion Section	Included with condenser	16 x 40.5 x 23.125	10S	15.624	23.13		ARROW	ARROW	
J22	Condenser Hx, 36-D10-040	8.07" w.c. @ 3755 acfm, linear			0			ARROW	ARROW	
J22	Demister, 36-N24-041	Included with condenser	16 x 24		0			ARROW	ARROW	
J22	Contraction Section	Included with condenser	30.5 x 16 x 8.5	10S	28	8.50		ARROW	ARROW	
P22	Pipe	16" Sch 10 Pipe, 316L S.Stl	16	10S	15.624	6.00		CD11-1	ARROW	

Table 3-4. Main OGTS Wet Scrubber Skid

	Component	Details	Size (in.)	Schedule	Inside Dia. (in.)	Length (in.)	Length (ft.)	ASHRAE Fitting No	ASHRAE Loss Coef.	Cv
P22	Expansion Joint	DME 16"	16		15.15	8.00		CR6-3	0.11	
P22	Pipe	16" Sch 10 Pipe, 316L S.Stl	16	10S	15.624	6.00		CD11-1	ARROW	
					Total:	21.667	1.81	Total:	0.110	
J23	Heater, 36-N84-042	2.5"w.c. @ 3776 acfm, 2490 scfm or 11,354 lbm/hr, quadratic Add heat to bring temp to 167 °F						ARROW	ARROW	
P23	Pipe	16" Sch 10 Pipe, 316L S.Stl	16	10S	15.624	6.00		CD11-1	ARROW	
P23	Expansion Joint	DME 16"	16		15.15	8.00		CR6-3	0.11	
P23	Elbow	90° - Std Radius	16	10S	15.624	0.00		CD3-9	0.155	
P23	Elbow	90° - Std Radius	16	10S	15.624	0.00		CD3-9	0.155	
P23	Expansion Joint	DME 16"	16		15.15	8.00		CR6-3	0.11	
P23	Pipe	16" Sch 10 Pipe, 316L S.Stl	16	10S	15.624	6.00		CD11-1	ARROW	
P23	Flange	150#	16	10S	15.624	5.04		NA		
					Total:	33.040	2.75	Total:	0.530	
J24	Butterfly Valve, 36-V-072	16" Keystone	16		14.3125	0.00		ARROW	ARROW	10040
P24	Flange	150#	16	10S	15.624	5.04		NA		
					Total:	5.040	0.42	Total:	0.000	

Table 3-5. Main OGTS HEPA Filter

	Component	Details	Size (in.)	Schedule	Inside Dia. (in.)	Length (in.)	Length (ft.)	ASHRAE Fitting No	ASHRAE Loss Coef.	Cv
HEPA Filter skid Assembly, Stream No. 31										
P24	Inlet Piping	16" Sch 10 Pipe, 316L S.Stl	16	10S	15.624	19.25		CD11-1	ARROW	
P24	Inlet Expansion Joint, EJ-609	US Bellows, C5765-36-EJ-001	16		14.88	11		CR6-3	0.11	
					Total:	30.250	2.521	Total:	0.110	
J25	90° Wye	90° Wye, one branch closed	16	10S	15.624	20		ARROW	ARROW	
P25	Inlet Piping	16" Sch 10 Pipe, 316L S.Stl	16	10S	15.624	19.25		CD11-1	ARROW	
P25	45° Ell	R/D = 1.5	16	10S	15.624			CD3-14	0.15	
					Total:	19.250	1.604	Total:	0.150	
J26	Isolation Valve, HV-313	16" Keystone, FIG. 362-173, Key-Lok	16		14.3125			ARROW	ARROW	10040
P26	Inlet Transition	Flanders 16 OD x 52.5 W x 60 H x 19.5" L	16	10S	15.75	19.5		ED2-1	0.27	
J27	Inlet Test Housing	Flanders, TSI-2H2W-GG-304-D1(SP), 52.5 W x 60 H x 28 L				28		ARROW	ARROW	
J27	HEPA Filter 1, T-007-W-42-05-NU-51-23-GG-FU5	Flanders Housing, BG1-2H2W-GG18-304-D1(SP), 52.5 W x				29.5		ARROW	ARROW	

Table 3-5. Main OGTS HEPA Filter

	Component	Details	Size (in.)	Schedule	Inside Dia. (in.)	Length (in.)	Length (ft.)	ASHRAE Fitting No	ASHRAE Loss Coef.	Cv
		60 H x 29.5 L, 4 HEPA Filters in Parallel, 1.3" w.c. (2.6" Dirty) at 5000 acfm								
J27	Test Combination Housing	Flanders, TSC-2H2W-GG-304-D1(SP), 52.5 W x 60 H x 28 L				28		ARROW	ARROW	
J27	HEPA Filter 2, T-007-W-42-05-NU-51-23-GG-FU5	Flanders Housing, BG1-2H2W-GG18-304-D1(SP), 52.5 W x 60 H x 29.5 L, 4 HEPA Filters in Parallel, 1.3" w.c. (2.6" Dirty) at 5000 acfm				23		ARROW	ARROW	
J27	Test Outlet Housing	Flanders, TSO-2H2W-GG-304-D1(SP), 52.5 W x 60 H x 24 L				24		ARROW	ARROW	
J27	Outlet Transition	Flanders 52.5 W x 60 H x 19.5 L x 16 OD	16	10S	15.75	19.5		ARROW	ARROW	
P27	See HEGA Inlet									

Table 3-6. Main OGTS HEGA Filters

	Component	Details	Size (in.)	Schedule	Inside Dia. (in.)	Length (in.)	Length (ft.)	ASHRAE Fitting No	ASHRAE Loss Coef.	Cv
HEGA Filter skid Assembly, Stream No. 38										
P27	Expansion Joint	16" DME	16		14.88	11		CR6-3	0.11	
P27	Inlet Spool Piece	16" straight duct at 9.25" L	16	10S	15.624	34		CD11-1	ARROW	
J29	Inlet Transition	Flanders 16 OD x 52.5 W x 60 H x 19.5" L	16	10S	15.75	15.5		ED2-1	0.27	
J29	Inlet Test Housing	Flanders, TSI-2H2W-GG-304-D1(SP), 52.5 W x 60 H x 28 L				28		ARROW	ARROW	
J29	Carbon Adsorber Section, AG-GG18-62-NS	Flanders Housing, BG1-2H2W-GG18-304-D1(SP), 52.5 W x 60 H x 29.5 L, 4 Carbon absorbers in Parallel				29.5		ARROW	ARROW	
J29	Test Combination Housing	Flanders, TSC-2H2W-GG-304-D1(SP), 52.5 W x 60 H x 28 L				28		ARROW	ARROW	
J29	Polishing Filter Section, PCEL85-4412D-GD-FD	Flanders, BG1-2H2W-GGF-304-D1(SP) 52.5 W x 60 H x 23 L, 4 ea filters in parallel,				23		ARROW	ARROW	

Table 3-6. Main OGTS HEGA Filters

	Component	Details	Size (in.)	Schedule	Inside Dia. (in.)	Length (in.)	Length (ft.)	ASHRAE Fitting No	ASHRAE Loss Coef.	Cv
		flow path is 48" x 48" x 23"								
J29	Test Outlet Housing	Flanders, TSO-2H2W-GG-304-D1(SP), 52.5 W x 60 H x 24 L				24		ARROW	ARROW	
P29	Outlet Transition	Flanders 52.5 W x 60 H x 19.5 L x 16 OD	16	10S	15.75	15.5		SD4-2	0.15	
J28	Outlet Damper, HV-314a	Flanders Damper, DBTP-FB-304-16	16	10S	15.75	9		CD9-1	0.19	
J30	Outlet Damper, HV-314b	Flanders Damper, DBTP-FB-304-16	16	10S	15.75	9		CD9-1	0.19	
P30	SCR Inlet									

Table 3-7. Main OGTS SCR

	Component	Details	Size (in.)	Schedule	Inside Dia. (in.)	Length (in.)	Length (ft.)	ASHRAE Fitting No	ASHRAE Loss Coef.	Cv
HEGA to SCR Piping, Stream No. 38										
J30	See HEGA Section									
P30	Straight Duct, 16-VOG-36-0286	16" Sch 10 Pipe, 316L S.Stl	16	10S	15.624	6		CD11-1	ARROW	
P30	45° Elbow	L/R = 1.5	16	10S	15.624			CD3-7	0.15	
P30	Straight Duct, 16-VOG-36-0286	16" Sch 10 Pipe, 316L S.Stl	16	10S	15.624	18		CD11-1	ARROW	
					Total:	24.000	2.000	Total:	0.150	
J31	90° Wye	60° Wye, one branch closed	16	10S	15.624			ARROW	ARROW	
P31	Straight Duct, 16-VOG-36-0286	16" Sch 10 Pipe, 316L S.Stl	16	10S	15.624	173.5		CD11-1	ARROW	
J32	Iso Valve, 36-V-017	Keystone 16"	16	10S	14.3125			ARROW	ARROW	10040
P32	90° Elbow	L/R = 1.5	16	10S	15.624			CD3-9	0.155	
J33	Lateral Tee into 22-VOG-36-0273, Main Flow at 4708 cfm, branch flow at 2984 cfm	45° Lateral, 14" x 16 x 20", Main flow, 16 x 20	16 x 14 x 20	10S	15.624/19.5	32		ARROW	ARROW	
J33	Branch Flow from Dilution Filter	45° Lateral, 14" x 16 x 20", Branch flow, 14 x 20	16 x 14 x 20	10S	13.624/19.9			ARROW	ARROW	
P33	Inlet Piping	20" Sch 10 Pipe, 316L S.Stl	20	10S	19.5	38		CD11-1	ARROW	
P33	90° Elbow	90° Elbow, L/R =	20	10S	19.5			CD3-9	0.145	

Table 3-7. Main OGTS SCR

	Component	Details	Size (in.)	Schedule	Inside Dia. (in.)	Length (in.)	Length (ft.)	ASHRAE Fitting No	ASHRAE Loss Coef.	Cv
		1.5								
P33	Inlet Piping	20" Sch 10 Pipe, 316L S.Stl	20	10S	19.5	29.5		CD11-1	ARROW	
P33	Expansion Joint, EJ-608	20" Dia x 14.75 Lg	20	10S	19.5	14.75		CR6-3	0.08	
P33	Inlet Transition	20 Dia x 40 W x 35 H	20	10S	19.5	24		ED2-1	0.17	
J34	SCR Unit Inlet				Total:	106.250	8.854	Total:	0.420	
Selective Catalytic Reduction Unit (SCR), Stream No. 40										
J34	SCR 20" w.c. at 7692 acfm, linear curve	Branch Environmental						ARROW	ARROW	
P35	24" Duct to Fan Inlet	See Fan Section								

Table 3-8. Main OGTS SCR to Fan Assembly

	Component	Details	Size (in.)	Schedule	Inside Dia. (in.)	Length (in.)	Length (ft.)	ASHRAE Fitting No	ASHRAE Loss Coef.	Cv
Stream 45 Assembly @ SCR/Fan										
J34	SCR Outlet See SCR Section									
P35	Outlet Transition @ SCR Outlet	40" x 54" to 24" Dia	40" x 54"	¼"	50.66	38		SD4-2	0.06	
"	90 Elbow	90° Elbow R/D = 1.5	24	10	23.5			CD3-9	0.13	
"	Outlet Piping, 24-VOG-36-0270	24" Sch 10 Pipe, C.Stl	24	10	23.5	36		CD11-1	ARROW	
"	90 Elbow	90° Elbow R/D = 1.5	24	10	23.5			CD3-9	0.130	
"	Outlet Piping, 24-VOG-36-0270	24" Sch 10 Pipe, C.Stl	24	10	23.5	202		CD11-1	ARROW	
"	90 Elbow	90° Elbow R/D = 1.5	24	10	23.5			CD3-9	0.130	
P35	Outlet Piping, 24-VOG-36-0270	24" Sch 10 Pipe, C.Stl	24	10	23.5	384		CD11-1	ARROW	
					Total:	660.000	55.000	Total:	0.45	
J36	Y Fitting	90° Wye, one leg closed	24	10	23.5	38.25		ARROW	ARROW	
P36	Fan Inlet Piping, 24-VOG-36-0271	24" Sch 10 Pipe, C.Stl	24	10	23.5	20		CD11-1	ARROW	
J37	Iso Valve, HV-525	24" Keystone	24		21.5625			ARROW	ARROW	21660

Table 3-8. Main OGTS SCR to Fan Assembly

	Component	Details	Size (in.)	Schedule	Inside Dia. (in.)	Length (in.)	Length (ft.)	ASHRAE Fitting No	ASHRAE Loss Coef.	Cv
		Butterfly								
P37	Fan Inlet Piping, 24-VOG-36-0271	24" Sch 10 Pipe, C.Stl	24	10	23.5	16.5		CD11-1	ARROW	
J38	Iso Valve, 36-V-024	24" Keystone Butterfly	24		21.5625			ARROW	ARROW	21660
P38	Fan Inlet Piping, 24-VOG-36-0271	24" Sch 10 Pipe, C.Stl	24	10	23.5	34.5		CD11-1	ARROW	
J39	Fan Inlet Piping Fittings	24 x 18 reducer, 16.7°	24 x 18	10	23.5/18.88	24		ARROW	ARROW	
P39	Inlet expansion joint, EJ-604	18"	18		18.88	18.75		CR6-3	0.1	
					Total:	77.250	6.438	Total:	0.210	
Stream 46 Assembly @ Fan/Stack										
J40	Fan	Robinson Model No. RB1806-5						ARROW	ARROW	
P40	Transition Fan to 20" Pipe	13.275 x 5.875 x 20 dia reducer.	13.275 x 5.875	10	9.46	24.8125		SD4-2	0.53	
P40	Outlet expansion joint, EJ-607	20" DME	20		19.5	14		CR6-3	0.08	
J41	Iso Valve, 36-V-080	20" Keystone Butterfly	20		17.9375			ARROW	ARROW	15430
P41	Fan Outlet Piping, 24-VOG-36-0317	20" Sch 10 Pipe, C.Stl	20	10	19.5	9.5		CD11-1	ARROW	
J42	Backdraft Damper, 36-N25-156	20" Ruskin Backdraft Damper	20	10	17.9375			ARROW	ARROW	

Table 3-8. Main OGTS SCR to Fan Assembly

	Component	Details	Size (in.)	Schedule	Inside Dia. (in.)	Length (in.)	Length (ft.)	ASHRAE Fitting No	ASHRAE Loss Coef.	Cv
P42	Fan Outlet Piping, 24-VOG-36-0317	20" Sch 10 Pipe, C.Stl	20	10	19.5	9.5		CD11-1	ARROW	
J43	Lateral @ 11' above Grade	30° Lateral, Flow Thru Assume Straight pipe with exit loss	20	10	19.5	39		ARROW	ARROW	
					Total:	96.813	8.068	Total:	1.720	
Exhaust Stack Assembly										
P42	Segment 1	72" OD x 3/8" rolled plate	72	NA	71.25	360		CD11-1	ARROW	
P42	Transition	72" OD x 48" OD	72 x 48		71.25	60		SD4-1	0.24	
P42	Segment 2	48" OD Pipe, 0.688 wall	48	NA	46.624	648		CD11-1	ARROW	
P42	Transition	48" OD x 24" OD	48 x 24		46.624	60		SD4-1	0.64	
P42	Segment 3	24" OD Pipe, 0.500 wall	24	80S	23	660		CD11-1	ARROW	
J43	Atmospheric Pressure				Total:	1788.000	149.000	Total:	0.880	
	Backdraft Damper dP	Ruskin PDR92 Damper, 70% Open								
	Vs, fpm	dP, inches w.c.								
	1000	0.25								
	2000	1								
	3000	2.05								
	4000	4								
	5000	6.2								

Table 3-8. Main OGTS SCR to Fan Assembly

	Component	Details	Size (in.)	Schedule	Inside Dia. (in.)	Length (in.)	Length (ft.)	ASHRAE Fitting No	ASHRAE Loss Coef.	Cv
	Fan Curve	Robinson Fan No. RB1806-5	Density	0.0374	lb/ft^3					
	Q, CFM	dP, inches w.c.	RPM	3550						
	0	119								
	2500	121								
	5000	123								
	7500	124								
	10000	123								
	12500	117								
	15000	106								
	17500	92								
	20000	63								
	22500	44								
	25000	15								
	26250	0								

Table 3-9. OGTS External Convection and Thermal Radiation Coefficients

McAdams Free Convection Correlations for air at 1 atm. (Holman 1990, Table 7-2)

Tw1 =	272	°F	Temperature End 1	
Tw2 =	172	°F	Temperature End 2	
Ts =	222	°F	Average Wall Temperature	
To =	115	°F	Ambient Temperature	
dT =	107	°F	Temperature difference	
h =	0.90	Btu/hr-ft^2-°F	Vertical Plane or Cylinder	h = 0.19 * dT^1/3
h =	0.85	Btu/hr-ft^2-°F	Horizontal Cylinder	h = 0.18 * dT^1/3
h =	1.04	Btu/hr-ft^2-°F	Horizontal Plate - heated face up	h = 0.22 * dT^1/3

Forced convection, flow across a cylinder (Holman 1990, eqn. 6-21):

$$\overline{Nu}_{f,D} = 0.3 + \frac{0.62 Re_D^{1/2} Pr^{1/3}}{[1+(0.4/Pr)^{2/3}]^{1/4}} \left[1 + \left(\frac{Re_D}{282{,}000} \right)^{5/8} \right]^{4/5} \qquad Re_D \cdot Pr > 0.2$$

Nufd =	0.3+A*B/C	Forced Convection, Nusselt No.			
A =	$0.62Re_d^{1/2}Pr^{1/3}$	B =	[1+(Red/282,000)^5/8]^4/5	C =	[1 +(0.4/Pr)^2/3]^1/4
D =	24	inch	Dia of Pipe	0.6096	meters
U =	0.1	mph	Free Stream Air Vel.	0.044704	m/s
Ts =	222	°F	Pipe Wall Temperature	105.56	°C
To =	115	°F	Ambient Temperature	46.11	°C
Tf =	168.5	°F	Air Film Temperature	75.83	°C
vf =	0.00019	sq ft/sec	Viscosity of Air	1.79E-05	sq. m/s
Red =	1.52328E+03	dimensionless	Reynolds No.		
Pr =	0.7778	dimensionless	Prandtl No.		
kf =	0.0146	Btu/hr-ft-°F	Thermal Conductivity	0.0253	W/m-°C

Table 3-9. OGTS External Convection and Thermal Radiation Coefficients

Red*Pr = 1184.85

The dimensionless numbers are:

Nusselt, $\overline{Nu_L} = \frac{\overline{h_c} L}{k_f}$ or $\overline{Nu_D} = \frac{\overline{h_c} D}{k_f}$;

Rayleigh, $Ra_L = \frac{g \cdot \beta \cdot \rho \cdot c_p (\Delta T) L^3}{v \cdot k_f}$ or $Ra_D = \frac{g \cdot \beta \cdot \rho \cdot c_p (\Delta T) D^3}{v \cdot k_f}$;

Reynolds, $Re_L = \frac{VL}{v}$ or $Re_D = \frac{VD}{v}$;

Prandtl, $Pr = \frac{v \cdot \rho \cdot c_p}{k_f}$;

A =	22.254	B =	1.030	C =	1.132	
Stefan B =	1.714E-09	Btu/hr-ft^2-R^4				
emiss =	0.6					
Nufd =	20.56	dimensionless	Forced Convection, Nusselt No.			
Nund =	116.92	dimensionless	Natural Convection, Nusselt No.			
Nut = 0.3 + [(Nufd- c)^j + (Nund - c)^j]^(1/j)			Combined Forced and Natural Convection, Nusselt No.			
c =	0.3	for Horizontal cylinder				
j =	4	for Horizontal cylinder				
Nut =	116.94	dimensionless				
hc =	0.85	Btu/hr-sq.ft-°F	Combined Convection	hc =	4.853417	Watt/sq m-°C

Table 3-9. OGTS External Convection and Thermal Radiation Coefficients

Radiation component:			
Stefan B =	1.714E-09	Btu/hr-ft^2-R^4	$h_r = \frac{\sigma\varepsilon(T_s^4 - T_0^4)}{T_s - T_0}$
emiss =	0.6		
hr =	1.03	Btu/hr-sq.ft-°F	Th Radiation Coefficient
ht =	hc + hr		Total HT Coefficient
ht =	1.88	Btu/hr-sq.ft-°F	Total HT Coefficient
q =	201.52	Btu/hr-sq.ft	Specific Heat Loss
A =	6.28	sq. ft	for cylinder 1 ft long
Q =	1266.21	Btu/hr	for cylinder 1 ft long
Q =	371.09	Watts	for cylinder 1 ft long
Q =	0.37	KW	for cylinder 1 ft long

DMJM H&N | AECOM

Attachment 4

Calculation No 145579-D-CA-061	**ORIGINATOR:** John Irwin **DATE:** 03-28-2006
Rev. No. : 0	
Calculation Title : DBVS OGTS Thermal Hydraulics Analysis	**CHECKER:** Jack McConwell **DATE:** 3-28-06

Equipment Data Sheets

This page intentionally left blank.

Keystone K-LOK Figure 360/362 and 370/372

ANSI/FCI 70-2 Control Valve Seat Leakage, Tolerances, and Test Specifications

ANSI B16.104-1976	Maximum Leakage			Test Medium	Pressure and Temperature
Class VI	Nominal Port Diameter (in.)	Bubbles per Minute[3]	ml. per Minute	Air or Nitrogen	Service ΔP or 50 psig [3.4 bar differential], whichever is lower, at 50° to 125°F [10° to 52°C]
	2	3	0.45		
	2½	4	0.60		
	3	6	0.90		
	4	11	1.70		
	6	27	4.00		
	8	45	6.75		
Class V	5 x 10^{-4} ml/min/psig/in. port dia. [5 x 10^{-12} m³/sec/bar differential/mm port dia.]			Water	Service ΔP at 50° to 125°F [10° to 52°C]
Class IV	0.01% valve capacity at full travel			Air or Water	Service ΔP or 50 psig [3.4 bar differential], whichever is lower, at 50° to 125°F [10° to 52°C]

Note:

1. K-LOK polymer, elastomer and fire-safe seats provide ANSI Class VI shutoff.
2. K-LOK metal seats provide ANSI Class IV shutoff.
3. Using the ANSI/FCI specified calibrated measuring device.

Reference ANSI/FCI 70-2 for further information.

Cv Values vs. Travel Position

Size (in.)	Angle of Opening 10°	20°	30°	40°	50°	60°	70°	80°	CL 150 90°	CL 300 90°
2	6	10	19	34	51	78	105	134	160	160
2½	6	10	19	34	53	80	111	148	175	170
3	9	12	24	43	67	100	139	186	220	215
4	16	23	44	80	130	194	269	360	425	413
5	30	44	83	149	242	366	504	673	795	785
6	50	70	130	230	370	550	760	1,010	1,195	1,140
8	83	117	251	437	695	1,052	1,496	2,001	2,440	2,300
10	144	202	454	754	1,185	1,821	2,611	3,541	4,540	4,333
12	206	304	678	1,051	1,625	2,766	3,839	5,325	6,915	6,600
14	257	360	747	1,186	1,909	3,121	4,416	6,225	8,300	7,920
16	308	432	803	1,422	2,269	3,614	5,251	7,530	10,040	9,580
18	373	548	1,121	1,869	2,990	4,735	6,728	9,845	12,460	11,890
20	463	690	1,390	2,315	4,010	6,175	8,795	12,655	15,430	14,720
24	650	991	2,076	3,803	6,060	9,091	13,301	18,466	21,660	20,665
30	1,015	1,550	3,240	4,670	9,400	14,200	21,400	29,800	36,000	35,500
36	1,460	2,300	4,640	5,950	13,700	21,000	30,400	44,000	56,000	55,500

Vacuum Rating

The combination of interference fit seats and bi-directional packing makes the K-LOK especially well suited for vacuum service.

Standard K-LOK high performance valves are rated to an absolute pressure of 4 x 10^{-5} inch Hg. Higher vacuum applications are available.

Actuator Selection

Actuator Type	Figure	Remark
Handle	F401	Lever lock
Gear	F420 and F500 Series	
Pneumatic	F79U	With extended travel adapter
Gear & Pneumatic	F453 + F79U	Deductchable gear unit provides manual override for the Keystone pneumatic actuator
Electric	F777	

Keystone reserves the right to change product design and specifications.
Official notice: Copyright © 2002 by Tyco International Ltd.

Robinson Industries, Inc.
Fan : 59" x 1,063" RB1806-5 SWSI
For : AMEC

Fan Speed : 3550 RPM
Temperature : 248 °F
Density : 0.0374 LB/FT³

Date : 1/26/2006
RII FO # : 107972

Note: Inlet P(s)= -120
Inlet Dia = 16.94

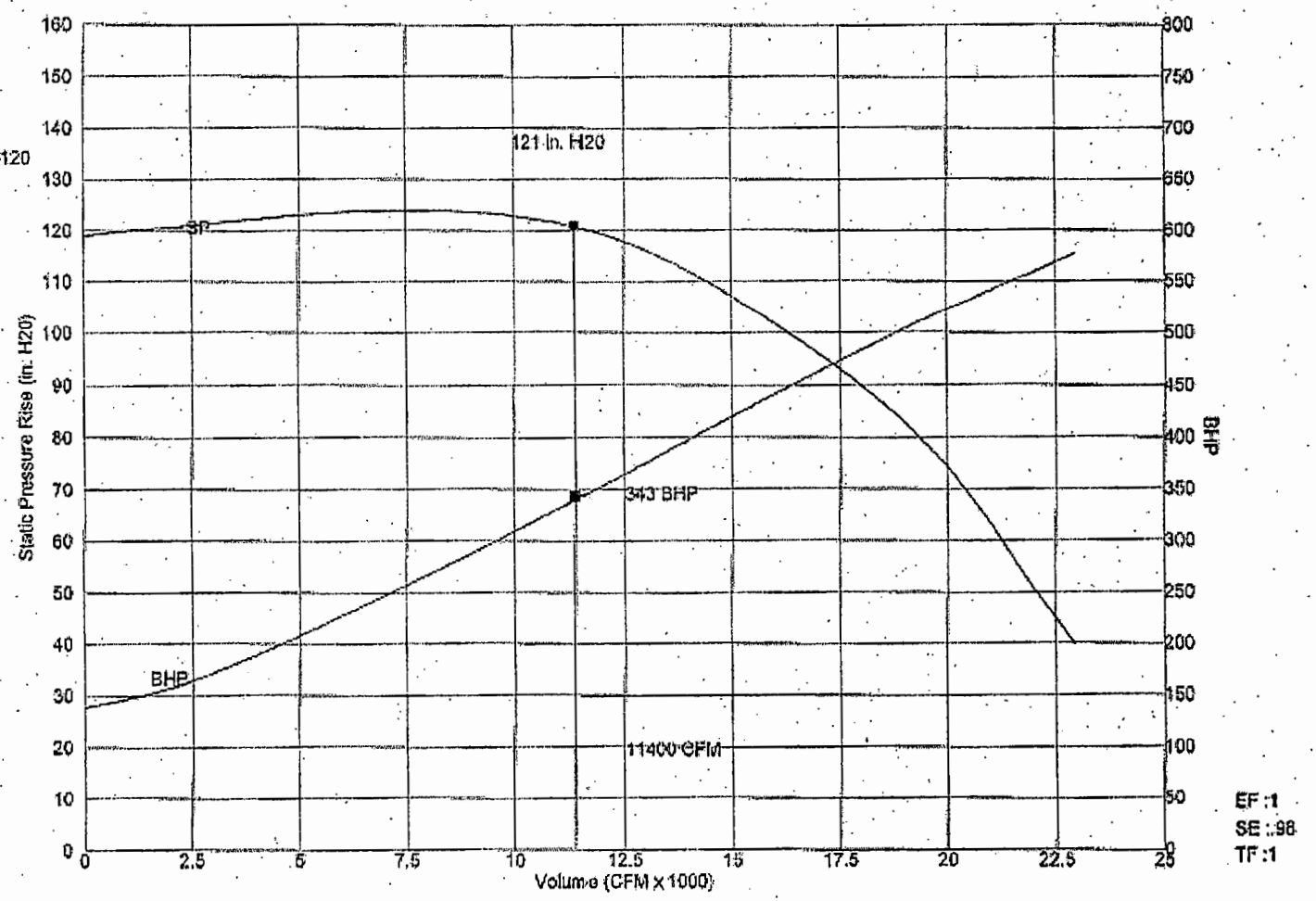

EF :1
SE :.98
TF :1

Version: 1.71.1000-R (Feb, 2002)

Printed: 01/19/2006 PDF

RUSKIN®

3900 Dr. Greaves Rd. • Kansas City, MO 64030 • (816) 761-7476 • FAX (816) 765-8955

PDR92 ROUND PRESSURE RELIEF DAMPER

(20" W.G. Maximum Design Pressure)

APPLICATION

Ruskin "pressure relief" style purge dampers are designed specifically to provide additional make-up air to incineration systems prior to fan start-up. Following system stabilization, normal counter-balance operation will continue. Offset single blade design lets Ruskin engineers calibrate the damper operation to exact customer specification.

STANDARD CONSTRUCTION

FRAME
One piece, carbon steel channel. See table below for web dimension and thickness.

BLADE
One piece, offset counter-balanced blade, stiffened as required. See table below for blade thickness.

SEAL
3/16" (5) x 1 1/2" (38) elastomeric seal.

AXLE
Full length, plated steel, reinforced as required. See table below for axle diameter.

BEARINGS
Grease lubricated ball bearings mounted outboard of frame with adjustable packing gland shaft seals.

BLADE STOP
1/2" x 1/2" (13 x 13) full circumference steel bar.

FINISH
High temperature aluminum paint.

MINIMUM SIZE
16" (406) diameter.

MAXIMUM SIZE
52" (1321) diameter. Consult Ruskin for larger sizes.

MAXIMUM TEMPERATURE
250°F (121°C) is standard. Damper can be supplied for 250°F (121°C) to 400°F (204°C) temperature conditions by increasing clearance between blade and frame and by using a suitable seal. Advise Ruskin of maximum operating temperature.

Note: Construction designs available based on specification.

Dimensions in parenthesis ( ) indicate millimeters.

VARIATIONS

Additional variations to those listed in table are available. Contact Ruskin for pricing.
- Special finishes.
- Higher temperature construction.

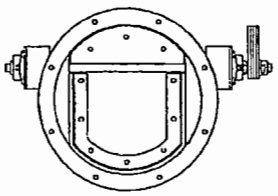

Illustrated with Optional Bolt Holes.

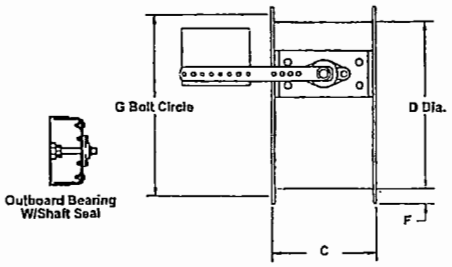

D – INSIDE DIA.		FRAME		BLADE THICK.	AXLE DIA.
ABOVE	THRU	FLANGE (F)	WEB (C)		
16" (406)	24" (610)	1 1/2" x 1/4" (38 x 6)	9" x 10 ga. (229 x 4)	1/4" (6)	1" (25)
24" (610)	32" (813)	2" x 1/4" (51 x 6)	12" x 1/4" (305 x 6)	1/4" (6)	1" (25)
32" (813)	40" (1016)	2" x 1/4" (51 x 6)	12" x 1/4" (305 x 6)	1/4" (6)	1 1/2" (38)
40" (1016)	48" (1219)	2" x 1/4" (51 x 6)	12" x 1/4" (305 x 6)	1/4" (6)	2" (51)
48" (1219)	52" (1321)	2 1/2" x 5/16" (64 x 8)	12" x 5/16" (305 x 8)	1/4" (6)	2" (51)

FRAME	BLADE	SEALS	BEARINGS	AXLE	ACCESSORIES (OPT)
STEEL CHANNEL – SEE CONSTRUCTION TABLE	STEEL STIFFENED AS REQUIRED – SEE TABLE	NEOPRENE BLADE SEAL (MAX. 250°F)	GREASE LUBRICATED BALL BRGS MOUNTED OUTBOARD WITH SHAFT SEALS	CONTINUOUS PLATED STEEL AXLE	BOLT HOLES IN ONE FLANGE
304 STAINLESS STEEL (OPT)	304 STAINLESS STEEL (OPT)	SILICONE BLADE SEAL (MAX 400°F) (OPT)		304 STAINLESS STEEL (OPT)	BOLT HOLES IN BOTH FLANGES
		EPDM BLADE SEAL (MAX 250°F) (OPT)			ELECTRIC ACTUATOR
					PNEUMATIC ACTUATOR

QTY.	DIMENSIONS				BOLT HOLE ORIENT.		COMMENTS	TAG
	D Diameter	G Bolt Circle Diam.	H No. Holes	H Hole Diam.	S Straddle	T Parallel		

JOB LOCATION
CONTRACTOR

SUGGESTED SPECIFICATION

Furnish and install, at locations shown in plans or in accordance with schedules, heavy duty industrial grade round pressure relief dampers meeting the following specifications. Dampers shall be butterfly type consisting of single blade mounted to axle within formed flange frame. Frames shall be constructed of steel channel and be a minimum of 10 gage. Damper blade shall be one piece, offset, counterbalanced construction, minimum 1/4" (6) thick and be complete with 3/16" (4.7) thick x 1 1/2" (38) elastomeric seal bolted to blade. Blades with centered axle or adhesive seals are not acceptable. Damper shaft shall be continuous, solid cold rolled steel extending through entire diameter of damper and beyond bearing to allow for installation of required external counterweights. Damper shall also be complete with actuator override mechanism for installation of either pneumatic or electric actuator. Axles shall be supported in sealed, relubricable ball bearings mounted outboard of frame. Press fit or bolt on bearings are not acceptable. Damper frame and blade shall be fabricated from hot rolled steel. All parts not otherwise protected shall be given one coat of aluminum paint. Standard damper construction shall withstand 6,000 FPM and 20" W.G. Maximum pressure drop across a 24" diameter unit shall be less than .15 at 1,000 FPM in the full open position. Damper leakage in the full closed position shall not exceed 35 total CFM based on a 48" (1219) diameter unit at 1" W.G. Submittal shall include published performance data developed from testing in accordance with AMCA Standard 500 in an AMCA registered laboratory. Damper shall be Ruskin model PDR92.

PDR92 PERFORMANCE DATA

LEAKAGE AND VELOCITY INFORMATION

DAMPER SIZE	MAXIMUM SYSTEM VELOCITY	LEAKAGE*	
		% OF MAX. FLOW	TOTAL CFM
52" (1321)	6,000 FPM	.045	40
48" (1219)	6,000 FPM	.05	35
36" (914)	6,000 FPM	.07	28
24" (813)	6,000 FPM	.13	25
16" (406)	6,000 FPM	.24	20

*Leakage information based on pressure differential of 1" W.G. Tested per AMCA Std. 500.

Leakage Note: Leakage rate will increase as pressure approaches relief set point.

Dampers may tolerate higher pressures and velocities than those listed here. Conservative ratings are presented intentionally in an effort to avoid misapplication. Consult Ruskin or your Ruskin representative when damper is to be applied in conditions exceeding recommended maximums.

PRESSURE DROP INFORMATION**

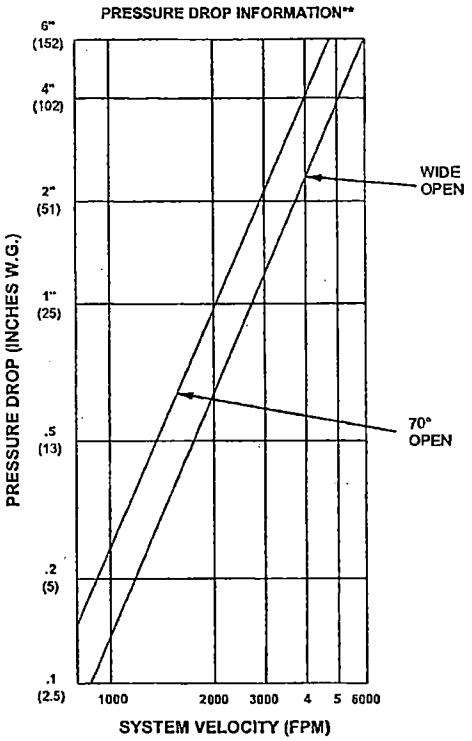

**Based on testing of a 24" (813) diameter damper.

Performance curves based on AMCA Standard 500 using test setup apparatus figure 5.3 (damper installed with duct upstream and downstream). Static pressure and CFM are corrected to .075 lb/cu ft air density.

HEGA Filters: *Ordering Information*

Ordering Information: *Type IV (V-Bed) Stainless Steel Adsorber*

Note: ΔP may vary by +/- 20% due to physical characteristics of the carton. These variations must be considered when sizing fans.

Full Size Gasket Seal Adsorbers

Model Number	Size H x W x D (inches)	Rated Flow (CFM)	Approx. ΔP (In. W.G.)	Res. Time (sec.)	No. of Beds	Bed Depth (inches)	Max. Temp.	Approx. Carbon Net Wt. (lbs.)	Approx. Ship Wt. (lbs.)
AG-GC12-101-AS	24x12x11½	500	0.90	0.083	10	1	200°F	29	89
AG-GC12-101-NS	24x12x11½	500	0.90	0.083	10	1	200°F	32	92
AG-GC12-101-WS	24x12x11½	500	2.00	0.083	10	1	200°F	35	95
AG-GC12-101-TS	24x12x11½	500	2.00	0.083	10	1	200°F	35	95
AG-GG12-101-AS	24x24x11½	1000	0.90	0.083	10	1	200°F	58	148
AG-GG12-101-NS	24x24x11½	1000	0.90	0.083	10	1	200°F	64	154
AG-GG12-101-WS	24x24x11½	1000	2.00	0.083	10	1	200°F	70	160
AG-GG12-101-TS	24x24x11½	1000	2.00	0.083	10	1	200°F	70	160
AG-GG16-81⅜-AS	24x24x16	1000	0.85	0.125	8	1⅜	200°F	75	205
AG-GG16-81⅜-NS	24x24x16	1000	0.85	0.125	8	1⅜	200°F	80	210
AG-GG16-81⅜-WS	24x24x16	1000	2.10	0.125	8	1⅜	200°F	90	220
AG-GG16-81⅜-TS	24x24x16	1000	2.10	0.125	8	1⅜	200°F	90	220
AG-GG12-62-AS	24x24x11½	700	1.75	0.125	6	2	200°F	59	157
AG-GG12-62-NS	24x24x11½	700	1.75	0.125	6	2	200°F	62	160
AG-GG12-62-WS	24x24x11½	700	3.90	0.125	6	2	200°F	70	168
AG-GG12-62-TS	24x24x11½	700	3.90	0.125	6	2	200°F	70	168
AG-GG16-62-AS	24x24x16	1000	1.75	0.125	6	2	200°F	79	200
AG-GG16-62-NS	24x24x16	1000	1.75	0.125	6	2	200°F	86	207
AG-GG16-62-WS	24x24x16	1000	3.90	0.125	6	2	200°F	98	219
AG-GG16-62-WSD	24x24x16	1000	3.90	0.125	6	2	200°F	100	221
AG-GG16-62-TS	24x24x16	1000	3.90	0.125	6	2	200°F	98	219
AG-GG16-62-TSD	24x24x16	1000	3.90	0.125	6	2	200°F	100	221
AG-GG18-62-AS	24x24x18	1250	1.75	0.125	6	2	200°F	90	220
AG-GG18-62-NS	24x24x18	1250	1.75	0.125	6	2	200°F	96	226
AG-GG18-62-WS	24x24x18	1250	4.10	0.125	6	2	200°F	105	235
AG-GG18-62-TS	24x24x18	1250	4.10	0.125	6	2	200°F	105	235

In-Place Test Housings

as a design objective. Consequently, there are countless filter banks that have been installed in air cleaning systems which are impossible to test because system design interferes with attaining mixing and dispersion on both the upstream and downstream sides of the banks being tested.

To test HEPA filters in-place under ideal conditions, an operator has a minimum ten duct diameters upstream and downstream of his filter bank. He has a well-designed transition piece on the inlet and outlet of his housing and has no obstructions such as other filters, adsorbers, etc., in his system. Figure 1, on the previous page, illustrates a bank of filters in such a system. The two essential factors for a satisfactory test in this situation are distance and design. The former ensures mixing on both sides of the filter bank; whereas, it is the system design — e.g. the transition — which aids in balancing the flow through the bank and results in a uniform challenge to the bank.

Note: Even with the ideal conditions shown in Figure 1 on the previous page, there are still certain impractical limitations:

- If the system, when tested, does not have a minimum efficiency of 99.95%, the operator is required to take corrective action.
- If the system is large enough for man-entry, a tester must suit up and enter the system on the downstream side to scan the bank.

Exposure time of maintenance and test personnel in containment systems is an increasing concern in facilities where toxic materials are present in the ventilation air.

Typically, HEPA filters have some detectable pinhole leaks which will be located during the probe-testing. *(See PrecisionScan on Page 20.)*

Operation of the Flanders/CSC In-Place Efficiency Test

The ideal test conditions described in the introduction depend upon distance for an effective test; however, the Flanders/CSC in-place test utilizes two identical mixing devices on the upstream and downstream side of the filter to achieve the same purpose. Figure 2, Page 4, shows a single HEPA filter in a housing. A hinged diffuser is located on both the air-entering and the air-leaving sides of the filter.

Prior to testing the filter, both diffusers are closed in order to mix the challenge aerosol into the airstream on the upstream side and to mix any leakage into the air on the downstream side. The challenge aerosol is then introduced into the system ahead of the first diffuser; upstream and downstream samples are taken and the results are compared to determine the penetration through the filter and its supporting framework. Figure 3, Page 4, illustrates a more complex system with a bank of prefilters, a bank of HEPA filters/adsorbers, and a second bank of HEPA filters/adsorbers, all in series. There are two filters/adsorbers in parallel in each bank. As illustrated in Figure 2, Page 4, there are diffusers located on both sides of each filter. The center test section is a combination unit and is used as the downstream test section when testing the first bank of HEPA filters and is used as the upstream test section when testing the second bank of HEPA filters.

Each test module is designed so that the readings are not affected by the adjacent filter. Since each filter is tested individually, a penetration reading for every filter in the system is obtained.

Regardless of the size of the system, the Flanders/CSC in-place test sections each add 0.5 inch w.g. resistance during the test (assuming 24 inch x 24 inch x 11½ inch filters are operating at 1000 CFM each.)

Patent No. 4,055,075 Other Pat. Pending

Nuclear Grade HEPA Filters: *PUREFORM® Filters*

Standard Sizes and Capacities

Flanders manufactures standard square and rectangular Nuclear Grade filters in a variety of sizes and capacities. (Sizes and capacities for Round and Nipple-connected filters are listed in their respective sections in this bulletin.) The type (PUREFORM® or Separator-Type) and depth of the filter element is a primary factor in filter capacity.

NOTE: *The maximum allowable resistance at the Nominal Rated Capacity is 1.0 inch w.g. (or 1.3 inch w.g. for certain sizes listed in ASME AG-1, Section FC, Table FC-4000-1).*

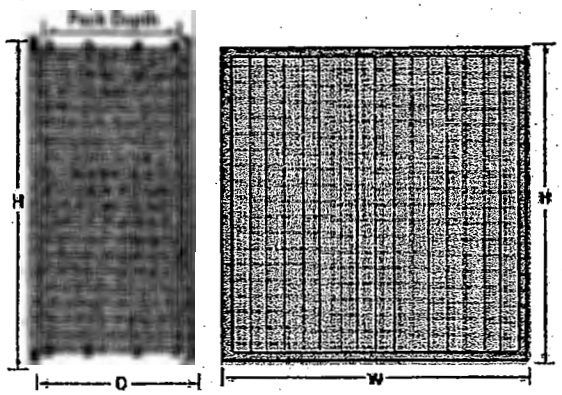

Available Filter Sizes and Capacities

11 inch PUREFORM® Filter Element

FILTER SIZE DESIGNATOR	DIMENSIONS (INCHES) H	W	D	CAPACITIES (CFM)	MAX. INITIAL RESISTANCE (INCHES)
CC-F	12	12	11 ½	200	1.0 w.g.
CC-F	12	12	11 ½	250	1.3 w.g.
CG-F	12	24	11 ½	425	1.0 w.g.
GG-F	24	12	11 ½	455	1.0 w.g.
GE-F	24	18	11 ½	725	1.0 w.g.
GG-F	24	24	11 ½	1000	1.0 w.g.
GG-F	24	24	11 ½	1250	1.3 w.g.
GG-F	24	24	11 ½	1500*	1.3 w.g.
GN-F	24	30	11 ½	1275	1.0 w.g.

*media velocity exceeds 5 fpm

4 inch PUREFORM® Filter Element

FILTER SIZE DESIGNATOR	DIMENSIONS (INCHES) H	W	D	CAPACITIES (CFM)	MAX. INITIAL RESISTANCE (INCHES)
BB-D	8	8	5 7/8	50	1.3 w.g.
CC-D	12	12	5 7/8	125	1.3 w.g.
CG-D	12	24	5 7/8	245	1.0 w.g.
GC-D	24	12	5 7/8	250	1.0 w.g.
GE-D	24	18	5 7/8	375	1.0 w.g.
GG-D	24	24	5 7/8	500	1.0 w.g.
GN-D	24	30	5 7/8	625	1.0 w.g.

PrecisionCell: *Performance Data*

High Capacity Filters with Single or Double Header

Capacities and Dimensions

Nominal Depth (inches)	Efficiency	Nominal Size H x W x D (inches)	250 fpm*		375 fpm*		500 fpm*		625 fpm*		Media Area (sq. ft.)	Weight Each (pounds)
			cfm	PD	cfm	PD	cfm	PD	cfm	PD		
12	90-95%	24 x 24 x 12	1000	.25	1500	.40	2000	.60	2500	.78	110	18
		24 x 12 x 12	500		750		1000		1250		52	9
	80-85%	24 x 24 x 12	1000	.20	1500	.35	2000	.50	2500	.60	91	18
		24 x 12 x 12	500		750		1000		1250		39	9
	60-65%	24 x 24 x 12	1000	.15	1500	.20	2000	.30	2500	.40	91	18
		24 x 12 x 12	500		750		1000		1250		39	9
6	90-95%	24 x 24 x 6	1000	.45	1500	.65	Note 3		Note 3		57	11
		24 x 12 x 6	500		750						25	8
		12 x 24 x 6	480		720		Note 3		Note 3		24	8
		12 x 12 x 6	225		337						11	5
	80-85%	24 x 24 x 6	1000	.35	1500	.55	Note 3		Note 3		45	11
		24 x 12 x 6	500		750						19	8
		12 x 24 x 6	480		720		Note 3		Note 3		20	8
		12 x 12 x 6	225		337						9	5
	60-65%	24 x 24 x 6	1000	.15	1500	.35	Note 3		Note 3		45	11
		24 x 12 x 6	500		750						19	8
		12 x 24 x 6	480		720		Note 3		Note 3		20	8
		12 x 12 x 6	225		337						9	5

* Add 10% to PD for Standard Capacity Filters

Notes:

1. PD represents clean pressure drop in inches w.g. The recommended final pressure drop for all models is 1 1/2 inches w.g.
2. Operation down to zero airflow is satisfactory for all models.
3. Consult factory before operating at these velocities.
4. Efficiency is average and is based on ASHRAE Standard 52.1 test methods.
5. Performance tolerances conform to Section 7.4 of ARI Standard 850.
6. Actual header face size is 5/8-inch under on height and width. Actual filter depth is 5 1/2 inches or 11 1/2 inches.

DMJM H&N | AECOM

Attachment 5

Calculation No 145579-D-CA-061	**ORIGINATOR:** John Irwin **DATE:** 03-28-2006
Rev. No. : 0	
Calculation Title : DBVS OGTS Thermal Hydraulics Analysis	**CHECKER:** Jack McConwell **DATE:** 3-28-06

ASHRAE Duct Fitting Database Printouts

This page intentionally left blank.

FITTING LOSS COEFFICIENTS

Fittings to support Examples 6 and 7 and some of the more common fittings are reprinted here.
For the complete fitting database see the *Duct Fitting Database* (ASHRAE 2002).

ROUND FITTINGS

CD3-1 Elbow, Die Stamped, 90 Degree, $r/D = 1.5$

D, in.	3	4	5	6	7	8	9	10
C_o	0.30	0.21	0.16	0.14	0.12	0.11	0.11	0.11

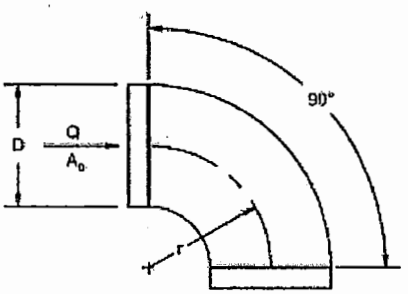

CD3-3 Elbow, Die Stamped, 45 Degree, $r/D = 1.5$

D, in.	3	4	5	6	7	8	9	10
C_o	0.18	0.13	0.10	0.08	0.07	0.07	0.07	0.07

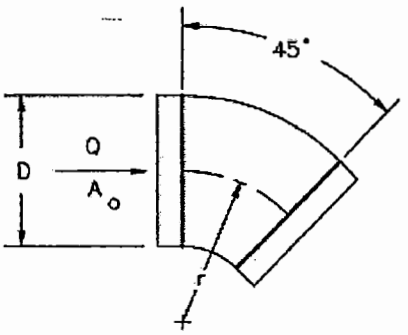

CD3-5 Elbow, Pleated, 90 Degree, $r/D = 1.5$

D, in.	4	6	8	10	12	14	16
C_o	0.57	0.43	0.34	0.28	0.26	0.25	0.25

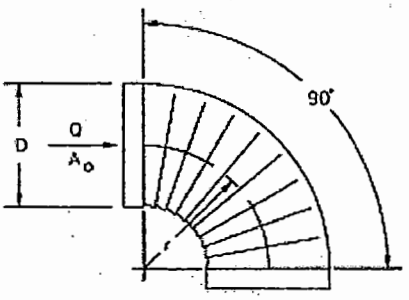

CD3-14 Elbow, 3 Gore, 45 Degree, $r/D = 1.5$

D, in.	3	6	9	12	15	18	21	24	27	30	60
C_o	0.31	0.17	0.13	0.11	0.11	0.09	0.08	0.08	0.07	0.07	0.07

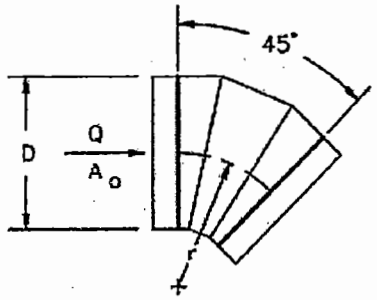

CD3-17 Elbow, Mitered, 45 Degree

D, in.	3	6	9	12	15	18	21	24	27	60
C_o	0.34	0.34	0.34	0.34	0.34	0.34	0.34	0.34	0.34	0.34

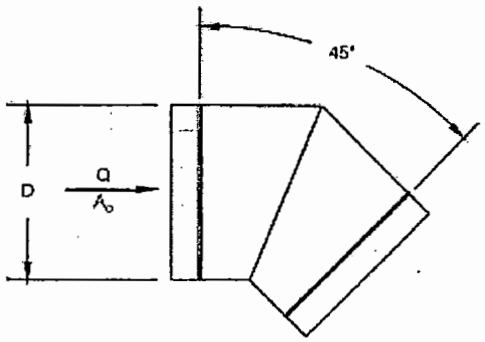

CD6-1 Screen (Only)

	C_o Values												
	n												
A_1/A_o	0.30	0.35	0.40	0.45	0.50	0.55	0.60	0.65	0.70	0.75	0.80	0.90	1.00
0.2	155.00	102.50	75.00	55.00	41.25	31.50	24.25	18.75	14.50	11.00	8.00	3.50	0.00
0.3	68.89	45.56	33.33	24.44	18.33	14.00	10.78	8.33	6.44	4.89	3.56	1.56	0.00
0.4	38.75	25.63	18.75	13.75	10.31	7.88	6.06	4.69	3.63	2.75	2.00	0.88	0.00
0.5	24.80	16.40	12.00	8.80	6.60	5.04	3.88	3.00	2.32	1.76	1.28	0.56	0.00
0.6	17.22	11.39	8.33	6.11	4.58	3.50	2.69	2.08	1.61	1.22	0.89	0.39	0.00
0.7	12.65	8.37	6.12	4.49	3.37	2.57	1.98	1.53	1.18	0.90	0.65	0.29	0.00
0.8	9.69	6.40	4.69	3.44	2.58	1.97	1.52	1.17	0.91	0.69	0.50	0.22	0.00
0.9	7.65	5.06	3.70	2.72	2.04	1.56	1.20	0.93	0.72	0.54	0.40	0.17	0.00
1.0	6.20	4.10	3.00	2.20	1.65	1.26	0.97	0.75	0.58	0.44	0.32	0.14	0.00
1.2	4.31	2.85	2.08	1.53	1.15	0.88	0.67	0.52	0.40	0.31	0.22	0.10	0.00
1.4	3.16	2.09	1.53	1.12	0.84	0.64	0.49	0.38	0.30	0.22	0.16	0.07	0.00
1.6	2.42	1.60	1.17	0.86	0.64	0.49	0.38	0.29	0.23	0.17	0.13	0.05	0.00
1.8	1.91	1.27	0.93	0.68	0.51	0.39	0.30	0.23	0.18	0.14	0.10	0.04	0.00
2.0	1.55	1.03	0.75	0.55	0.41	0.32	0.24	0.19	0.15	0.11	0.08	0.04	0.00
2.5	0.99	0.66	0.48	0.35	0.26	0.20	0.16	0.12	0.09	0.07	0.05	0.02	0.00
3.0	0.69	0.46	0.33	0.24	0.18	0.14	0.11	0.08	0.06	0.05	0.04	0.02	0.00
4.0	0.39	0.26	0.19	0.14	0.10	0.08	0.06	0.05	0.04	0.03	0.02	0.01	0.00
6.0	0.17	0.11	0.08	0.06	0.05	0.04	0.03	0.02	0.02	0.01	0.01	0.00	0.00

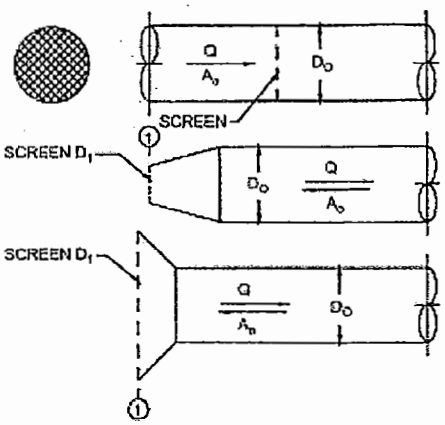

n = free area ratio of screen
A_o = area of duct
A_1 = cross-sectional area of duct or fitting where screen is located

CD9-1 Damper, Butterfly

	C_o Values											
	θ											
D/D_o	0	10	20	30	40	50	60	70	75	80	85	90
0.5	0.19	0.27	0.37	0.49	0.61	0.74	0.86	0.96	0.99	1.02	1.04	1.04
0.6	0.19	0.32	0.48	0.69	0.94	1.21	1.48	1.72	1.82	1.89	1.93	2.00
0.7	0.19	0.37	0.64	1.01	1.51	2.12	2.81	3.46	3.73	3.94	4.08	6.00
0.8	0.19	0.45	0.87	1.55	2.60	4.13	6.14	8.38	9.40	10.30	10.80	15.00
0.9	0.19	0.54	1.22	2.51	4.97	9.57	17.80	30.50	38.00	45.00	50.10	100.00
1.0	0.19	0.67	1.76	4.38	11.20	32.00	113.00	619.00	2010.00	10350.00	99999.00	99999.00

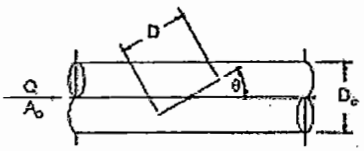

CD9-3 Fire Damper, Curtain Type, Type C

$C_o = 0.12$

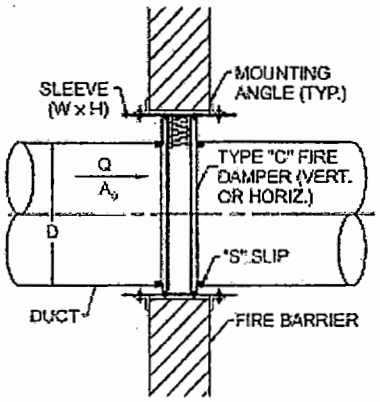

ED1-1 Duct Mounted in Wall

	C_o Values								
	L/D								
t/D	0.00	0.002	0.01	0.05	0.10	0.20	0.30	0.50	10.00
0.00	0.50	0.57	0.68	0.80	0.86	0.92	0.97	1.00	1.00
0.02	0.50	0.51	0.52	0.55	0.60	0.66	0.69	0.72	0.72
0.05	0.50	0.50	0.50	0.50	0.50	0.50	0.50	0.50	0.50
10.00	0.50	0.50	0.50	0.50	0.50	0.50	0.50	0.50	0.50

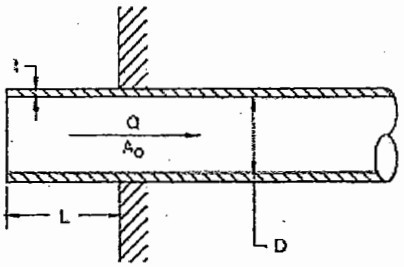

ED1-3 Bellmouth, with Wall

r/D	0.00	0.01	0.02	0.03	0.04	0.05	0.06	0.08	0.10	0.12	0.16	0.20	10.00
C_o	0.50	0.44	0.37	0.31	0.26	0.22	0.20	0.15	0.12	0.09	0.06	0.03	0.03

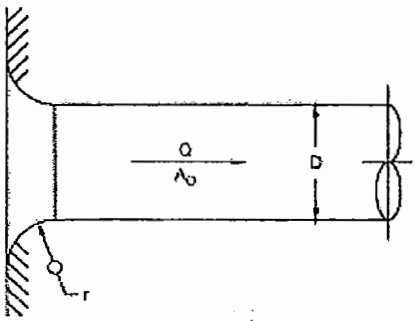

ED2-1 Conical Diffuser, Round to Plenum, Exhaust/Return Systems

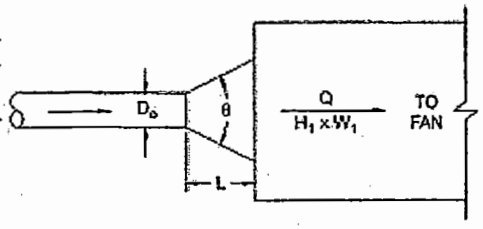

	C_e Values										
	L/D_o										
A_1/A_o	0.5	1.0	2.0	3.0	4.0	5.0	6.0	8.0	10.0	12.0	14.0
1.5	0.03	0.02	0.03	0.03	0.04	0.05	0.06	0.08	0.10	0.11	0.13
2.0	0.08	0.06	0.04	0.04	0.04	0.05	0.05	0.06	0.08	0.09	0.10
2.5	0.13	0.09	0.06	0.06	0.06	0.06	0.06	0.06	0.07	0.08	0.09
3.0	0.17	0.12	0.09	0.07	0.07	0.06	0.06	0.07	0.07	0.08	0.08
4.0	0.23	0.17	0.12	0.10	0.09	0.08	0.08	0.08	0.08	0.08	0.08
6.0	0.30	0.22	0.16	0.13	0.12	0.10	0.10	0.09	0.09	0.09	0.08
8.0	0.34	0.26	0.18	0.15	0.13	0.12	0.11	0.10	0.09	0.09	0.09
10.0	0.36	0.28	0.20	0.16	0.14	0.13	0.12	0.11	0.10	0.09	0.09
14.0	0.39	0.30	0.22	0.18	0.16	0.14	0.13	0.12	0.10	0.10	0.10
20.0	0.41	0.32	0.24	0.20	0.17	0.15	0.14	0.12	0.11	0.11	0.10

	Optimum Angle θ										
A_1/A_o	0.5	1.0	2.0	3.0	4.0	5.0	6.0	8.0	10.0	12.0	14.0
1.5	34	20	13	9	7	6	4	3	2	2	2
2.0	42	28	17	12	10	9	8	6	5	4	3
2.5	50	32	20	15	12	11	10	8	7	6	5
3.0	54	34	22	17	14	12	11	10	8	8	6
4.0	58	40	26	20	16	14	13	12	10	10	9
6.0	62	42	28	22	19	16	15	12	11	10	9
8.0	64	44	30	24	20	18	16	13	12	11	10
10.0	66	46	30	24	22	19	17	14	12	11	10
14.0	66	48	32	26	22	19	17	14	13	11	11
20.0	68	48	32	26	22	20	18	15	13	12	11

ED4-1 Transition, Round to Round, Exhaust/Return Systems

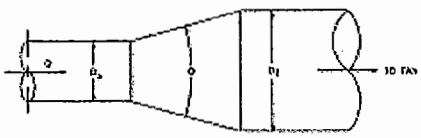

	C_e Values									
	θ									
A_o/A_1	10	15	20	30	45	60	90	120	150	180
0.06	0.21	0.29	0.38	0.60	0.84	0.88	0.88	0.88	0.88	0.88
0.10	0.21	0.28	0.38	0.59	0.76	0.80	0.83	0.84	0.83	0.83
0.25	0.16	0.22	0.30	0.46	0.61	0.65	0.64	0.63	0.62	0.62
0.50	0.11	0.13	0.19	0.32	0.33	0.33	0.32	0.31	0.30	0.30
1.00	0.00	0.00	0.00	0.00	0.00	0.00	0.00	0.00	0.00	0.00
2.00	0.20	0.20	0.20	0.20	0.22	0.24	0.48	0.72	0.96	1.04
4.00	0.80	0.64	0.64	0.64	0.88	1.12	2.72	4.32	5.60	6.56
6.00	1.80	1.44	1.44	1.44	1.98	2.52	6.48	10.10	13.00	15.10
10.00	5.00	5.00	5.00	5.00	6.50	8.00	19.00	29.00	37.00	43.00

ED4-2 Transition, Round to Rectangular, Exhaust/Return Systems

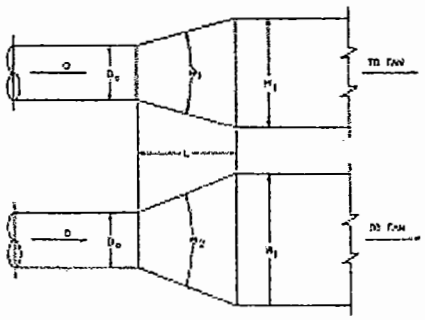

	C_e Values									
	θ									
A_o/A_1	10	15	20	30	45	60	90	120	150	180
0.06	0.30	0.54	0.53	0.65	0.77	0.88	0.95	0.98	0.98	0.93
0.10	0.30	0.50	0.53	0.64	0.75	0.84	0.89	0.91	0.91	0.88
0.25	0.25	0.36	0.45	0.52	0.58	0.62	0.64	0.64	0.64	0.64
0.50	0.15	0.21	0.25	0.30	0.33	0.33	0.33	0.32	0.31	0.30
1.00	0.00	0.00	0.00	0.00	0.00	0.00	0.00	0.00	0.00	0.00
2.00	0.24	0.28	0.26	0.20	0.22	0.24	0.49	0.73	0.97	1.04
4.00	0.89	0.78	0.79	0.70	0.88	1.12	2.72	4.33	5.62	6.58
6.00	1.89	1.67	1.59	1.49	1.98	2.52	6.51	10.14	13.05	15.14
10.00	5.09	5.32	5.15	5.05	6.50	8.05	19.06	29.07	37.08	43.05

ED5-1 Wye, 30 Degree, Converging

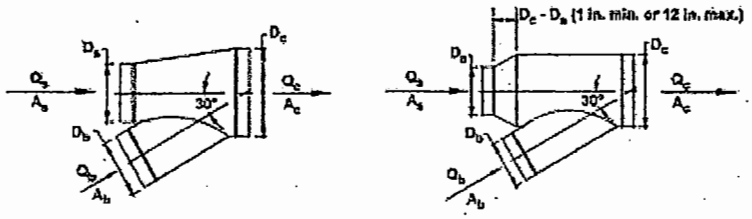

		C_s Values								
		Q_s/Q_c								
A_s/A_c	A_b/A_c	0.1	0.2	0.3	0.4	0.5	0.6	0.7	0.8	0.9
0.2	0.2	−24.17	−5.78	−0.60	0.30	0.64	0.77	0.83	0.88	0.98
	0.3	−55.88	−9.77	−2.57	−0.50	0.25	0.55	0.67	0.70	0.71
	0.4	−99.93	−17.94	−5.13	−1.45	−0.11	0.42	0.62	0.68	0.68
	0.5	−156.51	−28.40	−8.37	−2.62	−0.52	0.30	0.62	0.71	0.69
	0.6	−225.62	−41.13	−12.30	−4.01	−0.99	0.20	0.66	0.78	0.75
	0.7	−307.26	−56.14	−16.90	−5.61	−1.51	0.11	0.73	0.90	0.86
	0.8	−401.44	−73.44	−22.18	−7.44	−2.08	0.04	0.84	1.06	1.01
	0.9	−508.15	−93.02	−28.15	−9.49	−2.71	−0.03	0.99	1.27	1.20
	1.0	−627.39	−114.89	−34.80	−11.77	−3.39	−0.08	1.18	1.52	1.43
0.3	0.2	−13.97	−1.77	0.08	0.59	0.77	0.84	0.88	0.92	1.06
	0.3	−33.06	−5.33	−1.09	0.10	0.51	0.66	0.71	0.72	0.74
	0.4	−59.43	−10.08	−2.52	−0.41	0.32	0.59	0.67	0.68	0.66
	0.5	−93.24	−16.11	−4.30	−1.00	0.14	0.56	0.69	0.70	0.66
	0.6	−134.51	−23.45	−6.44	−1.68	−0.03	0.57	0.76	0.77	0.70
	0.7	−183.23	−32.08	−8.93	−2.45	−0.21	0.61	0.87	0.88	0.79
	0.8	−239.47	−42.01	−11.77	−3.32	−0.38	0.69	1.02	1.03	0.91
	0.9	−303.16	−53.25	−14.97	−4.27	−0.56	0.80	1.21	1.23	1.07
	1.0	−374.32	−65.79	−18.53	−5.32	−0.73	0.94	1.45	1.47	1.27
0.4	0.2	−9.20	−0.85	0.39	0.71	0.82	0.87	0.90	0.94	1.09
	0.3	−22.31	−3.24	−0.38	0.39	0.64	0.73	0.76	0.78	0.85
	0.4	−40.52	−6.48	−1.37	0.02	0.48	0.64	0.67	0.66	0.65
	0.5	−63.71	−10.50	−2.50	−0.33	0.40	0.63	0.69	0.67	0.63
	0.6	−92.00	−15.37	−3.84	−0.71	0.33	0.67	0.75	0.71	0.65
	0.7	−125.40	−21.08	−5.40	−1.13	0.28	0.75	0.85	0.80	0.70
	0.8	−163.90	−27.65	−7.16	−1.59	0.25	0.86	1.00	0.93	0.80
	0.9	−207.52	−35.07	−9.14	−2.09	0.25	1.02	1.18	1.10	0.93
	1.0	−256.25	−43.35	−11.33	−2.63	0.26	1.21	1.42	1.31	1.09
0.5	0.2	−6.62	−0.36	0.54	0.77	0.85	0.88	0.90	0.95	1.11
	0.3	−16.42	−2.11	−0.01	0.54	0.72	0.78	0.80	0.83	0.96
	0.4	−30.26	−4.59	−0.79	0.22	0.54	0.64	0.66	0.64	0.64
	0.5	−47.68	−7.55	−1.61	−0.02	0.48	0.63	0.63	0.62	0.59
	0.6	−68.93	−11.13	−2.56	−0.28	0.45	0.67	0.69	0.65	0.58
	0.7	−94.00	−15.31	−3.65	−0.55	0.44	0.74	0.77	0.71	0.61
	0.8	−122.90	−20.12	−4.88	−0.83	0.46	0.85	0.90	0.81	0.68
	0.9	−155.63	−25.54	−6.25	−1.12	0.51	1.00	1.06	0.94	0.77
	1.0	−192.18	−31.58	−7.77	−1.43	0.59	1.19	1.26	1.12	0.90
0.6	0.2	−5.12	−0.10	0.62	0.79	0.85	0.87	0.90	0.95	1.11
	0.3	−13.00	−1.49	0.18	0.61	0.75	0.79	0.82	0.86	1.02
	0.4	−24.31	−3.55	−0.50	0.30	0.55	0.62	0.63	0.62	0.63
	0.5	−38.41	−5.94	−1.16	0.09	0.48	0.59	0.60	0.57	0.55
	0.6	−55.58	−8.80	−1.92	−0.12	0.45	0.61	0.62	0.57	0.52
	0.7	−75.83	−12.16	−2.79	−0.33	0.44	0.66	0.67	0.60	0.52
	0.8	−99.17	−16.00	−3.76	−0.54	0.46	0.74	0.76	0.67	0.56
	0.9	−125.60	−20.33	−4.83	−0.76	0.51	0.86	0.88	0.77	0.62
	1.0	−155.12	−25.14	−6.02	−0.99	0.58	1.02	1.04	0.90	0.71
0.7	0.2	−4.24	0.05	0.65	0.80	0.85	0.87	0.89	0.94	1.12
	0.3	−11.00	−1.15	0.27	0.63	0.75	0.79	0.82	0.87	1.06
	0.4	−20.82	−3.00	−0.38	0.31	0.52	0.59	0.60	0.59	0.61
	0.5	−32.99	−5.09	−0.98	0.10	0.43	0.53	0.54	0.52	0.51
	0.6	−47.78	−7.58	−1.67	−0.11	0.38	0.52	0.53	0.49	0.45
	0.7	−65.22	−10.50	−2.44	−0.32	0.34	0.53	0.54	0.49	0.43
	0.8	−85.32	−13.83	−3.30	−0.53	0.33	0.58	0.59	0.52	0.43
	0.9	−108.07	−17.58	−4.26	−0.75	0.34	0.66	0.67	0.58	0.46
	1.0	−133.48	−21.76	−5.30	−0.97	0.38	0.76	0.78	0.67	0.51

ED5-1 Wye, 30 Degree, Converging (*Continued*)

		C_b Values (*Concluded*)								
		Q_b/Q_c								
A_b/A_c	A_b/A_c	0.1	0.2	0.3	0.4	0.5	0.6	0.7	0.8	0.9
0.8	0.2	−3.75	0.11	0.65	0.79	0.84	0.86	0.88	0.94	1.12
	0.3	−9.88	−0.99	0.29	0.63	0.74	0.78	0.81	0.87	1.09
	0.4	−18.88	−2.75	−0.36	0.28	0.48	0.55	0.56	0.57	0.61
	0.5	−29.98	−4.71	−0.96	0.04	0.36	0.46	0.47	0.46	0.47
	0.6	−43.46	−7.05	−1.64	−0.20	0.26	0.41	0.43	0.41	0.39
	0.7	−59.34	−9.77	−2.40	−0.44	0.19	0.38	0.41	0.38	0.34
	0.8	−77.64	−12.88	−3.26	−0.69	0.13	0.38	0.42	0.37	0.31
	0.9	−98.35	−16.38	−4.20	−0.95	0.09	0.40	0.45	0.39	0.30
	1.0	−121.48	−20.27	−5.24	−1.23	0.06	0.45	0.51	0.43	0.31
0.9	0.2	−3.52	0.12	0.64	0.78	0.82	0.85	0.88	0.93	1.12
	0.3	−9.34	−0.95	0.28	0.60	0.71	0.76	0.80	0.87	1.10
	0.4	−17.96	−2.70	−0.40	0.22	0.43	0.50	0.53	0.54	0.60
	0.5	−28.58	−4.65	−1.05	−0.07	0.26	0.37	0.40	0.41	0.42
	0.6	−41.45	−6.97	−1.77	−0.35	0.12	0.28	0.32	0.32	0.32
	0.7	−56.61	−9.66	−2.58	−0.65	0.00	0.21	0.27	0.26	0.24
	0.8	−74.08	−12.74	−3.49	−0.97	−0.12	0.16	0.23	0.22	0.18
	0.9	−93.84	−16.21	−4.50	−1.30	−0.23	0.13	0.21	0.19	0.14
	1.0	−115.92	−20.06	−5.61	−1.66	−0.34	0.11	0.21	0.18	0.11
1.0	0.2	−3.48	0.10	0.62	0.76	0.81	0.84	0.87	0.92	1.11
	0.3	−9.22	−1.00	0.23	0.56	0.68	0.74	0.78	0.86	1.11
	0.4	−17.76	−2.79	−0.50	0.14	0.37	0.45	0.49	0.52	0.60
	0.5	−28.31	−4.82	−1.21	−0.20	0.15	0.28	0.33	0.35	0.38
	0.6	−41.06	−7.21	−2.01	−0.55	−0.04	0.15	0.22	0.23	0.25
	0.7	−56.09	−9.99	−2.91	−0.92	−0.23	0.03	0.12	0.14	0.15
	0.8	−73.39	−13.17	−3.92	−1.32	−0.41	−0.07	0.04	0.06	0.06
	0.9	−92.98	−16.75	−5.04	−1.75	−0.60	−0.17	−0.03	−0.01	−0.02
	1.0	−114.85	−20.74	−6.28	−2.21	−0.79	−0.26	−0.09	−0.07	−0.09

		C_s Values								
		Q_s/Q_c								
A_s/A_c	A_s/A_c	0.1	0.2	0.3	0.4	0.5	0.6	0.7	0.8	0.9
0.2	0.2	−16.02	−3.15	−0.80	0.04	0.45	0.69	0.86	0.99	1.10
	0.3	−11.65	−1.94	−0.26	0.32	0.60	0.77	0.90	1.01	1.10
	0.4	−8.56	−1.20	0.05	0.47	0.68	0.82	0.92	1.02	1.11
	0.5	−6.41	−0.71	0.25	0.57	0.73	0.84	0.93	1.02	1.11
	0.6	−4.85	−0.36	0.38	0.63	0.76	0.86	0.94	1.02	1.11
	0.7	−3.68	−0.10	0.48	0.68	0.79	0.87	0.95	1.03	1.11
	0.8	−2.77	0.10	0.56	0.71	0.81	0.88	0.95	1.03	1.11
	0.9	−2.04	0.26	0.62	0.74	0.82	0.89	0.95	1.03	1.11
	1.0	−1.45	0.38	0.66	0.76	0.83	0.89	0.96	1.03	1.11
0.3	0.2	−36.37	−7.59	−2.48	−0.79	−0.06	0.29	0.47	0.57	0.61
	0.3	−26.79	−5.07	−1.42	−0.27	0.21	0.42	0.53	0.59	0.61
	0.4	−19.94	−3.49	−0.80	0.02	0.35	0.49	0.56	0.60	0.62
	0.5	−15.18	−2.44	−0.41	0.20	0.43	0.54	0.58	0.61	0.62
	0.6	−11.73	−1.70	−0.13	0.32	0.49	0.56	0.60	0.61	0.62
	0.7	−9.13	−1.14	0.07	0.41	0.53	0.58	0.60	0.61	0.62
	0.8	−7.11	−0.72	0.23	0.48	0.57	0.60	0.61	0.62	0.62
	0.9	−5.49	−0.38	0.35	0.53	0.59	0.61	0.62	0.62	0.62
	1.0	−4.17	−0.11	0.45	0.58	0.61	0.62	0.62	0.62	0.62
0.4	0.2	−64.82	−13.76	−4.74	−1.81	−0.59	−0.02	0.24	0.36	0.39
	0.3	−47.92	−9.38	−2.93	−0.94	−0.16	0.19	0.34	0.39	0.40
	0.4	−35.81	−6.62	−1.88	−0.46	0.07	0.30	0.38	0.41	0.40
	0.5	−27.39	−4.78	−1.20	−0.16	0.22	0.36	0.41	0.42	0.41
	0.6	−21.28	−3.48	−0.73	0.04	0.31	0.41	0.43	0.43	0.41
	0.7	−16.68	−2.51	−0.38	0.20	0.38	0.44	0.45	0.43	0.41
	0.8	−13.10	−1.77	−0.12	0.31	0.44	0.46	0.46	0.44	0.41
	0.9	−10.24	−1.18	0.09	0.40	0.48	0.48	0.46	0.44	0.41
	1.0	−7.90	−0.69	0.26	0.47	0.51	0.50	0.47	0.44	0.41

ED5-1 Wye, 30 Degree, Converging (*Concluded*)

		C_s Values (*Concluded*)								
		Q_s/Q_c								
A_s/A_c	A_b/A_c	0.1	0.2	0.3	0.4	0.5	0.6	0.7	0.8	0.9
0.5	0.2	−101.39	−21.64	−7.61	−3.07	−1.19	−0.34	0.05	0.22	0.26
	0.3	−75.05	−14.87	−4.83	−1.75	−0.54	−0.03	0.19	0.26	0.27
	0.4	−56.18	−10.59	−3.21	−1.02	−0.20	0.13	0.26	0.29	0.27
	0.5	−43.04	−7.74	−2.16	−0.56	0.02	0.23	0.30	0.30	0.27
	0.6	−33.51	−5.72	−1.43	−0.24	0.16	0.30	0.33	0.31	0.28
	0.7	−26.34	−4.22	−0.90	−0.01	0.27	0.35	0.35	0.32	0.28
	0.8	−20.75	−3.06	−0.49	0.16	0.35	0.39	0.37	0.33	0.28
	0.9	−16.29	−2.14	−0.17	0.30	0.41	0.41	0.38	0.33	0.28
	1.0	−12.64	−1.39	0.10	0.41	0.46	0.44	0.39	0.33	0.28
0.6	0.2	−146.06	−31.26	−11.09	−4.56	−1.89	−0.68	−0.12	0.10	0.16
	0.3	−108.19	−21.55	−7.12	−2.69	−0.97	−0.24	0.07	0.17	0.17
	0.4	−81.04	−15.40	−4.80	−1.65	−0.48	−0.01	0.17	0.20	0.18
	0.5	−62.13	−11.31	−3.30	−0.99	−0.17	0.13	0.22	0.22	0.18
	0.6	−48.43	−8.41	−2.25	−0.54	0.03	0.22	0.26	0.24	0.18
	0.7	−38.10	−6.25	−1.49	−0.22	0.18	0.29	0.29	0.25	0.19
	0.8	−30.07	−4.59	−0.90	0.03	0.30	0.34	0.31	0.25	0.19
	0.9	−23.64	−3.27	−0.44	0.23	0.39	0.38	0.33	0.26	0.19
	1.0	−18.39	−2.20	−0.06	0.39	0.46	0.42	0.34	0.27	0.19
0.7	0.2	−198.85	−42.62	−15.17	−6.31	−2.68	−1.04	−0.29	0.01	0.08
	0.3	−147.33	−29.41	−9.78	−3.77	−1.44	−0.45	−0.04	0.10	0.10
	0.4	−110.40	−21.07	−6.64	−2.36	−0.77	−0.14	0.09	0.15	0.11
	0.5	−84.67	−15.50	−4.60	−1.48	−0.36	0.05	0.17	0.17	0.11
	0.6	−66.02	−11.56	−3.19	−0.86	−0.08	0.18	0.23	0.19	0.12
	0.7	−51.97	−8.63	−2.15	−0.42	0.12	0.27	0.27	0.20	0.12
	0.8	−41.04	−6.37	−1.35	−0.08	0.27	0.34	0.29	0.21	0.12
	0.9	−32.30	−4.53	−0.72	0.19	0.39	0.39	0.32	0.22	0.12
	1.0	−25.16	−3.12	−0.21	0.40	0.49	0.43	0.33	0.23	0.13
0.8	0.2	−259.75	−55.70	−19.86	−8.29	−3.56	−1.43	−0.46	−0.06	0.03
	0.3	−192.48	−38.47	−12.84	−4.99	−1.95	−0.66	−0.12	0.05	0.05
	0.4	−144.25	−27.58	−8.74	−3.16	−1.09	−0.26	0.05	0.11	0.06
	0.5	−110.65	−20.32	−6.08	−2.00	−0.55	−0.01	0.15	0.15	0.07
	0.6	−86.30	−15.17	−4.24	−1.20	−0.19	0.15	0.22	0.17	0.08
	0.7	−67.95	−11.34	−2.88	−0.62	0.08	0.27	0.27	0.19	0.08
	0.8	−53.67	−8.40	−1.84	−0.18	0.28	0.36	0.30	0.20	0.08
	0.9	−42.26	−6.05	−1.02	0.16	0.44	0.43	0.33	0.21	0.08
	1.0	−32.93	−4.15	−0.35	0.44	0.56	0.49	0.36	0.22	0.09
0.9	0.2	−328.76	−70.51	−25.16	−10.53	−4.54	−1.84	−0.62	−0.12	0.00
	0.3	−243.63	−48.72	−16.28	−6.35	−2.50	−0.87	−0.20	0.03	0.03
	0.4	−182.60	−34.94	−11.09	−4.03	−1.41	−0.37	0.02	0.10	0.04
	0.5	−140.07	−25.75	−7.74	−2.57	−0.74	−0.06	0.15	0.14	0.05
	0.6	−109.25	−19.24	−5.40	−1.56	−0.28	0.15	0.23	0.17	0.05
	0.7	−86.04	−14.40	−3.68	−0.83	0.06	0.30	0.30	0.20	0.06
	0.8	−67.96	−10.66	−2.37	−0.27	0.31	0.41	0.34	0.21	0.06
	0.9	−53.52	−7.70	−1.33	0.17	0.51	0.50	0.38	0.22	0.06
	1.0	−41.71	−5.29	−0.49	0.52	0.67	0.57	0.41	0.23	0.07
1.0	0.2	−405.88	−87.06	−31.07	−13.01	−5.62	−2.29	−0.77	−0.16	−0.02
	0.3	−300.73	−60.15	−20.11	−7.85	−3.10	−1.09	−0.26	0.02	0.02
	0.4	−225.44	−43.14	−13.70	−4.99	−1.76	−0.47	0.01	0.11	0.04
	0.5	−172.93	−31.80	−9.56	−3.18	−0.92	−0.09	0.17	0.17	0.05
	0.6	−134.89	−23.76	−6.68	−1.94	−0.35	0.17	0.28	0.20	0.06
	0.7	−106.23	−17.78	−4.56	−1.04	0.06	0.26	0.35	0.23	0.06
	0.8	−83.92	−13.18	−2.93	−0.35	0.37	0.50	0.41	0.25	0.06
	0.9	−66.08	−9.52	−1.65	0.19	0.62	0.61	0.46	0.26	0.07
	1.0	−51.51	−6.54	−0.61	0.63	0.81	0.70	0.49	0.28	0.07

ED5-2 Wye, 45 Degree, Converging

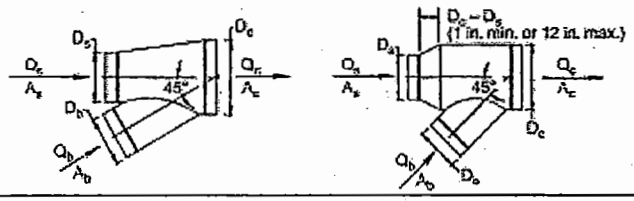

		C_p Values								
		Q_b/Q_c								
A_s/A_c	A_b/A_c	0.1	0.2	0.3	0.4	0.5	0.6	0.7	0.8	0.9
0.2	0.2	−25.19	−3.97	−0.64	0.32	0.67	0.82	0.90	0.96	1.08
	0.3	−38.03	−10.14	−2.63	−0.45	0.36	0.69	0.84	0.93	1.08
	0.4	−104.08	−18.80	−5.40	−1.51	−0.07	0.52	0.77	0.88	1.01
	0.5	−163.36	−29.97	−8.97	−2.87	−0.62	0.29	0.67	0.80	0.84
	0.6	−235.59	−43.47	−13.22	−4.44	−1.20	0.12	0.65	0.83	0.85
	0.7	−320.90	−59.38	−18.21	−6.25	−1.84	−0.04	0.68	0.91	0.93
	0.8	−419.32	−77.73	−23.95	−8.33	−2.56	−0.22	0.72	1.02	1.02
	0.9	−530.86	−98.50	−30.44	−10.66	−3.36	−0.40	0.79	1.16	1.14
	1.0	−655.51	−121.72	−37.68	−13.26	−4.25	−0.59	0.87	1.33	1.28
0.3	0.2	−14.27	−1.77	0.13	0.66	0.85	0.93	0.97	1.03	1.21
	0.3	−33.62	−5.28	−0.95	0.27	0.70	0.87	0.94	1.01	1.19
	0.4	−60.83	−10.26	−2.48	−0.30	0.47	0.77	0.88	0.93	1.04
	0.5	−95.87	−16.64	−4.44	−1.00	0.21	0.66	0.82	0.84	0.84
	0.6	−138.38	−24.26	−6.68	−1.73	0.01	0.66	0.86	0.91	0.88
	0.7	−188.60	−33.25	−9.32	−2.58	−0.20	0.68	0.98	1.02	0.95
	0.8	−246.54	−43.60	−12.34	−3.54	−0.45	0.72	1.11	1.15	1.03
	0.9	−312.21	−55.33	−15.76	−4.61	−0.68	0.78	1.26	1.31	1.13
	1.0	−385.59	−68.43	−19.56	−5.79	−0.94	0.86	1.45	1.49	1.24
0.4	0.2	−8.77	−0.64	0.54	0.85	0.95	0.99	1.03	1.09	1.31
	0.3	−21.41	−2.85	−0.10	0.63	0.87	0.96	1.00	1.06	1.26
	0.4	−39.30	−6.02	−1.05	0.28	0.72	0.87	0.91	0.92	1.00
	0.5	−62.10	−9.96	−2.16	−0.06	0.63	0.85	0.90	0.88	0.86
	0.6	−89.77	−14.65	−3.42	−0.38	0.61	0.93	0.98	0.95	0.90
	0.7	−122.46	−20.19	−4.88	−0.74	0.61	1.04	1.12	1.06	0.95
	0.8	−160.18	−26.56	−6.55	−1.13	0.62	1.18	1.29	1.19	1.01
	0.9	−202.93	−33.77	−8.44	−1.60	0.64	1.36	1.48	1.35	1.07
	1.0	−250.70	−41.83	−10.54	−2.09	0.68	1.56	1.71	1.53	1.15
0.5	0.2	−5.45	0.04	0.79	0.97	1.02	1.04	1.07	1.14	1.39
	0.3	−14.10	−1.39	0.40	0.84	0.97	1.00	1.02	1.07	1.28
	0.4	−26.48	−3.53	−0.24	0.59	0.83	0.89	0.88	0.85	0.86
	0.5	−41.84	−5.96	−0.80	0.51	0.88	0.97	0.95	0.90	0.87
	0.6	−60.61	−8.90	−1.46	0.43	0.97	1.09	1.06	0.97	0.90
	0.7	−82.80	−12.36	−2.22	0.35	1.09	1.25	1.20	1.08	0.93
	0.8	−108.39	−16.35	−3.09	0.27	1.24	1.45	1.38	1.20	0.96
	0.9	−137.41	−20.86	−4.07	0.19	1.42	1.68	1.59	1.35	0.99
	1.0	−169.34	−25.90	−5.15	0.11	1.63	1.95	1.83	1.52	1.02
0.6	0.2	−5.54	−0.08	0.70	0.91	0.98	1.01	1.05	1.14	1.42
	0.3	−14.48	−1.75	0.13	0.64	0.81	0.88	0.92	0.98	1.19
	0.4	−27.10	−4.14	−0.68	0.26	0.57	0.68	0.71	0.72	0.76
	0.5	−42.34	−6.91	−1.50	−0.02	0.47	0.64	0.68	0.69	0.70
	0.6	−62.07	−10.28	−2.48	−0.34	0.37	0.61	0.67	0.66	0.63
	0.7	−84.79	−14.26	−3.62	−0.71	0.27	0.59	0.67	0.63	0.54
	0.8	−111.02	−18.84	−4.92	−1.12	0.16	0.58	0.67	0.61	0.44
	0.9	−140.76	−24.03	−6.40	−1.57	0.04	0.58	0.68	0.59	0.31
	1.0	−174.01	−29.83	−8.04	−2.07	−0.08	0.58	0.70	0.56	0.15
0.7	0.2	−3.96	0.25	0.83	0.97	1.01	1.04	1.08	1.17	1.47
	0.3	−11.07	−1.10	0.34	0.77	0.83	0.87	0.90	0.95	1.13
	0.4	−20.92	−2.92	−0.27	0.43	0.65	0.72	0.73	0.75	0.77
	0.5	−33.20	−5.01	−0.85	0.24	0.59	0.69	0.71	0.69	0.70
	0.6	−48.21	−7.55	−1.55	0.03	0.53	0.68	0.69	0.65	0.61
	0.7	−65.95	−10.56	−2.37	−0.20	0.48	0.68	0.69	0.62	0.49
	0.8	−86.42	−14.01	−3.30	−0.46	0.43	0.68	0.69	0.58	0.35
	0.9	−109.65	−17.93	−4.35	−0.75	0.38	0.70	0.70	0.53	0.18
	1.0	−135.63	−22.32	−5.52	−1.07	0.33	0.72	0.71	0.48	−0.03

ED5-2 Wye, 45 Degree, Converging (*Continued*)

		C_b Values (*Concluded*)								
		Q_b/Q_c								
A_s/A_c	A_b/A_c	0.1	0.2	0.3	0.4	0.5	0.6	0.7	0.8	0.9
0.8	0.2	−2.78	0.50	0.91	1.01	1.03	1.05	1.09	1.18	1.49
	0.3	−8.58	−0.65	0.47	0.74	0.82	0.85	0.86	0.89	1.02
	0.4	−16.29	−2.00	0.05	0.56	0.71	0.75	0.74	0.74	0.78
	0.5	−25.98	−3.59	−0.37	0.44	0.68	0.73	0.72	0.69	0.69
	0.6	−37.82	−5.52	−0.87	0.31	0.65	0.72	0.70	0.64	0.58
	0.7	−51.83	−7.79	−1.44	0.17	0.63	0.73	0.69	0.59	0.43
	0.8	−68.01	−10.42	−2.10	0.01	0.62	0.75	0.69	0.53	0.25
	0.9	−86.37	−13.39	−2.84	−0.16	0.61	0.77	0.68	0.47	0.03
	1.0	−106.91	−16.73	−3.68	−0.35	0.61	0.79	0.68	0.38	−0.25
0.9	0.2	−1.87	0.68	0.98	1.03	1.05	1.06	1.09	1.18	1.49
	0.3	−6.70	−0.33	0.54	0.74	0.79	0.80	0.80	0.81	0.87
	0.4	−12.69	−1.29	0.29	0.66	0.76	0.77	0.75	0.74	0.78
	0.5	−20.37	−2.48	0.00	0.59	0.74	0.75	0.72	0.69	0.67
	0.6	−29.77	−3.94	−0.34	0.52	0.73	0.75	0.70	0.63	0.54
	0.7	−40.89	−5.66	−0.73	0.45	0.74	0.76	0.68	0.56	0.36
	0.8	−53.74	−7.64	−1.18	0.37	0.76	0.78	0.67	0.48	0.13
	0.9	−68.32	−9.89	−1.69	0.28	0.77	0.80	0.65	0.38	−0.15
	1.0	−84.66	−12.42	−2.27	0.18	0.80	0.83	0.62	0.26	−0.49
1.0	0.2	−1.17	0.81	1.02	1.05	1.05	1.06	1.09	1.18	1.48
	0.3	−5.09	−0.02	0.64	0.78	0.81	0.81	0.80	0.80	0.86
	0.4	−9.81	−0.72	0.48	0.74	0.79	0.78	0.76	0.74	0.77
	0.5	−15.89	−1.61	0.29	0.71	0.79	0.77	0.72	0.68	0.65
	0.6	−23.34	−2.69	0.07	0.68	0.80	0.77	0.69	0.60	0.49
	0.7	−32.15	−3.96	−0.18	0.66	0.82	0.78	0.67	0.51	0.27
	0.8	−42.35	−5.44	−0.47	0.64	0.85	0.79	0.63	0.41	0.00
	0.9	−53.94	−7.12	−0.80	0.61	0.88	0.81	0.60	0.28	−0.34
	1.0	−66.93	−9.01	−1.17	0.58	0.92	0.82	0.55	0.13	−0.75

		C_s Values								
		Q_s/Q_c								
A_s/A_c	A_b/A_c	0.1	0.2	0.3	0.4	0.5	0.6	0.7	0.8	0.9
0.2	0.2	−10.16	−2.08	−0.43	0.24	0.62	0.88	1.10	1.29	1.46
	0.3	−7.83	−1.20	0.03	0.30	0.77	0.97	1.14	1.30	1.46
	0.4	−5.62	−0.59	0.30	0.65	0.85	1.01	1.16	1.31	1.46
	0.5	−3.96	−0.18	0.48	0.74	0.90	1.04	1.18	1.32	1.47
	0.6	−2.71	0.12	0.60	0.80	0.94	1.06	1.19	1.32	1.47
	0.7	−1.75	0.34	0.70	0.85	0.96	1.07	1.19	1.32	1.47
	0.8	−0.99	0.52	0.77	0.88	0.98	1.08	1.20	1.32	1.47
	0.9	−0.38	0.66	0.82	0.91	0.99	1.09	1.20	1.33	1.47
	1.0	0.13	0.77	0.87	0.93	1.00	1.10	1.20	1.33	1.47
0.3	0.2	−23.35	−5.14	−1.67	−0.44	0.12	0.42	0.58	0.67	0.72
	0.3	−18.44	−3.44	−0.84	0.00	0.36	0.54	0.64	0.69	0.73
	0.4	−13.64	−2.22	−0.34	0.25	0.49	0.60	0.67	0.70	0.73
	0.5	−10.00	−1.37	0.00	0.41	0.57	0.64	0.69	0.71	0.73
	0.6	−7.26	−0.75	0.24	0.52	0.62	0.67	0.70	0.72	0.73
	0.7	−5.15	−0.29	0.41	0.60	0.66	0.69	0.71	0.72	0.73
	0.8	−3.48	0.07	0.55	0.66	0.69	0.70	0.71	0.72	0.73
	0.9	−2.14	0.36	0.65	0.71	0.72	0.72	0.72	0.72	0.73
	1.0	−1.03	0.60	0.74	0.75	0.73	0.73	0.72	0.72	0.73
0.4	0.2	−42.17	−9.48	−3.34	−1.23	−0.31	0.12	0.33	0.42	0.44
	0.3	−33.68	−6.60	−1.98	−0.53	0.05	0.31	0.41	0.45	0.45
	0.4	−25.24	−4.51	−1.13	−0.13	0.25	0.40	0.46	0.47	0.45
	0.5	−18.83	−3.04	−0.57	0.13	0.37	0.46	0.48	0.48	0.46
	0.6	−13.99	−1.97	−0.17	0.31	0.46	0.50	0.50	0.48	0.46
	0.7	−10.27	−1.17	0.12	0.44	0.52	0.53	0.51	0.49	0.46
	0.8	−7.32	−0.54	0.35	0.54	0.57	0.55	0.52	0.49	0.46
	0.9	−4.94	−0.04	0.53	0.62	0.61	0.57	0.53	0.49	0.46
	1.0	−2.98	0.37	0.68	0.68	0.64	0.58	0.54	0.50	0.46
0.5	0.2	−66.95	−15.18	−5.49	−2.21	−0.81	−0.16	0.14	0.26	0.28
	0.3	−53.80	−10.77	−3.45	−1.17	−0.27	0.11	0.26	0.30	0.29
	0.4	−40.66	−7.54	−2.16	−0.57	0.02	0.25	0.32	0.33	0.30
	0.5	−30.68	−5.27	−1.30	−0.18	0.21	0.33	0.36	0.34	0.30
	0.6	−23.15	−3.62	−0.69	0.09	0.33	0.39	0.38	0.35	0.30
	0.7	−17.34	−2.38	−0.24	0.29	0.42	0.43	0.40	0.35	0.30
	0.8	−12.75	−1.41	0.11	0.44	0.49	0.47	0.41	0.36	0.30
	0.9	−9.04	−0.64	0.39	0.56	0.55	0.49	0.43	0.36	0.30
	1.0	−5.99	0.00	0.61	0.65	0.59	0.51	0.43	0.36	0.30

ED5-2 Wye, 45 Degree, Converging (*Concluded*)

		C_s Values (*Concluded*)								
		Q_s/Q_c								
A_s/A_c	A_b/A_c	0.1	0.2	0.3	0.4	0.5	0.6	0.7	0.8	0.9
0.6	0.2	−97.90	−22.29	−8.18	−3.41	−1.39	−0.46	−0.03	0.13	0.16
	0.3	−79.03	−15.99	−5.28	−1.94	−0.64	−0.09	0.13	0.19	0.17
	0.4	−60.15	−11.37	−3.44	−1.09	−0.23	0.10	0.21	0.22	0.18
	0.5	−45.80	−8.13	−2.22	−0.55	0.03	0.22	0.26	0.24	0.18
	0.6	−34.97	−5.77	−1.35	−0.17	0.20	0.30	0.30	0.25	0.18
	0.7	−26.62	−3.98	−0.71	0.11	0.33	0.36	0.32	0.26	0.19
	0.8	−20.02	−2.59	−0.21	0.33	0.43	0.41	0.34	0.26	0.19
	0.9	−14.68	−1.48	0.18	0.49	0.51	0.44	0.35	0.27	0.19
	1.0	−10.29	−0.57	0.51	0.63	0.57	0.47	0.37	0.27	0.19
0.7	0.2	−135.28	−30.88	−11.42	−4.85	−2.08	−0.80	−0.21	0.02	0.06
	0.3	−109.64	−22.35	−7.50	−2.88	−1.07	−0.31	0.00	0.09	0.07
	0.4	−83.96	−16.08	−5.02	−1.73	−0.52	−0.05	0.11	0.13	0.08
	0.5	−64.44	−11.67	−3.36	−0.99	−0.17	0.11	0.18	0.15	0.09
	0.6	−49.71	−8.47	−2.19	−0.48	0.06	0.22	0.22	0.17	0.09
	0.7	−38.35	−6.04	−1.31	−0.10	0.24	0.30	0.26	0.18	0.09
	0.8	−29.37	−4.16	−0.64	0.18	0.37	0.36	0.28	0.19	0.09
	0.9	−22.12	−2.65	−0.10	0.41	0.47	0.40	0.30	0.19	0.09
	1.0	−16.14	−1.41	0.33	0.60	0.55	0.44	0.32	0.20	0.09
0.8	0.2	−179.32	−41.01	−15.25	−6.55	−2.88	−1.19	−0.41	−0.10	−0.04
	0.3	−145.86	−29.89	−10.14	−3.99	−1.58	−0.55	−0.13	0.00	−0.02
	0.4	−112.34	−21.71	−6.91	−2.50	−0.86	−0.22	0.01	0.05	−0.01
	0.5	−86.85	−15.96	−4.75	−1.54	−0.41	−0.01	0.10	0.08	0.00
	0.6	−67.62	−11.78	−3.22	−0.87	−0.10	0.13	0.16	0.10	0.00
	0.7	−52.79	−8.62	−2.08	−0.38	0.12	0.23	0.20	0.11	0.00
	0.8	−41.06	−6.16	−1.20	0.00	0.29	0.31	0.23	0.12	0.01
	0.9	−31.59	−4.19	−0.51	0.29	0.43	0.37	0.26	0.13	0.01
	1.0	−23.78	−2.58	0.06	0.53	0.54	0.42	0.28	0.14	0.01
0.9	0.2	−230.27	−52.75	−19.69	−8.53	−3.81	−1.63	−0.63	−0.22	−0.13
	0.3	−187.95	−38.69	−13.24	−5.29	−2.16	−0.83	−0.28	−0.10	−0.10
	0.4	−145.53	−28.34	−9.15	−3.41	−1.26	−0.41	−0.10	−0.04	−0.09
	0.5	−113.27	−21.07	−6.42	−2.19	−0.69	−0.15	0.01	0.00	−0.09
	0.6	−88.94	−15.78	−4.48	−1.35	−0.30	0.03	0.09	0.03	−0.08
	0.7	−70.16	−11.78	−3.04	−0.73	−0.02	0.16	0.14	0.04	−0.08
	0.8	−55.33	−8.67	−1.93	−0.25	0.20	0.26	0.18	0.06	−0.07
	0.9	−43.33	−6.18	−1.05	0.12	0.37	0.33	0.21	0.07	−0.07
	1.0	−33.46	−4.14	−0.34	0.42	0.50	0.39	0.24	0.08	−0.07
1.0	0.2	−288.39	−66.15	−24.77	−10.80	−4.88	−2.14	−0.87	−0.35	−0.22
	0.3	−236.14	−48.79	−16.81	−6.80	−2.85	−1.15	−0.44	−0.20	−0.19
	0.4	−183.77	−36.02	−11.76	−4.47	−1.73	−0.63	−0.22	−0.12	−0.18
	0.5	−143.95	−27.05	−8.39	−2.98	−1.03	−0.31	−0.08	−0.08	−0.17
	0.6	−113.91	−20.52	−6.00	−1.93	−0.55	−0.09	0.01	−0.04	−0.16
	0.7	−90.73	−15.58	−4.23	−1.17	−0.20	0.07	0.08	−0.02	−0.16
	0.8	−72.41	−11.74	−2.86	−0.58	0.06	0.19	0.13	−0.01	−0.16
	0.9	−57.61	−8.66	−1.77	−0.12	0.27	0.28	0.16	0.01	−0.15
	1.0	−45.42	−6.15	−0.88	0.25	0.44	0.36	0.20	0.02	−0.15

ED5-3 Tee, D_c < or = 10 in., Converging

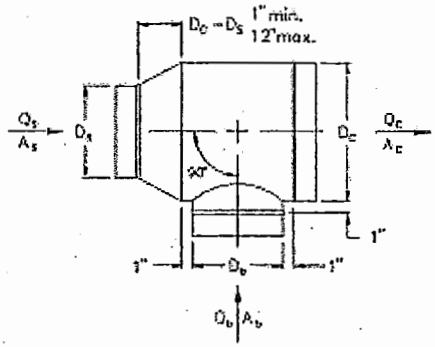

		C_s Values								
		Q_s/Q_c								
A_s/A_c	A_b/A_c	0.1	0.2	0.3	0.4	0.5	0.6	0.7	0.8	0.9
0.2	0.2	−24.56	−3.63	−0.36	0.59	0.93	1.08	1.14	1.19	1.27
	0.3	−56.72	−9.54	−2.15	−0.01	0.78	1.10	1.23	1.30	1.39
	0.4	−101.83	−17.86	−4.68	−0.87	0.52	1.09	1.32	1.41	1.48
	0.5	−159.91	−28.59	−7.98	−2.02	0.17	1.05	1.40	1.51	1.51
	0.6	−230.83	−41.68	−11.98	−3.39	−0.24	1.03	1.53	1.66	1.61
	0.7	−314.56	−57.10	−16.68	−4.98	−0.69	1.04	1.71	1.90	1.82
	0.8	−411.18	−74.90	−22.10	−6.82	−1.21	1.04	1.92	2.16	2.05
	0.9	−520.69	−95.08	−28.25	−8.90	−1.81	1.04	2.15	2.45	2.31
	1.0	−643.09	−117.63	−35.12	−11.24	−2.47	1.04	2.41	2.78	2.58
0.3	0.2	−14.05	−1.55	0.36	0.89	1.08	1.16	1.19	1.23	1.34
	0.3	−33.18	−4.91	−0.58	0.64	1.07	1.23	1.30	1.34	1.44
	0.4	−60.09	−9.68	−1.94	0.24	1.00	1.29	1.39	1.42	1.47
	0.5	−94.80	−15.89	−3.74	−0.33	0.87	1.32	1.46	1.46	1.38
	0.6	−136.97	−23.33	−5.84	−0.92	0.81	1.45	1.65	1.66	1.53
	0.7	−186.81	−32.14	−8.32	−1.62	0.74	1.61	1.88	1.88	1.70
	0.8	−244.33	−42.30	−11.19	−2.43	0.65	1.78	2.14	2.13	1.88
	0.9	−309.54	−53.82	−14.44	−3.35	0.54	1.98	2.42	2.41	2.08
	1.0	−382.43	−66.70	−18.08	−4.39	0.42	2.19	2.74	2.72	2.29
0.4	0.2	−8.95	−0.54	0.71	1.04	1.15	1.20	1.22	1.26	1.40
	0.3	−21.82	−2.70	0.16	0.94	1.19	1.29	1.32	1.35	1.47
	0.4	−39.99	−5.81	−0.67	0.73	1.19	1.35	1.39	1.39	1.41
	0.5	−63.37	−9.82	−1.75	0.45	1.18	1.42	1.47	1.43	1.32
	0.6	−91.72	−14.59	−2.97	0.20	1.26	1.60	1.67	1.60	1.43
	0.7	−125.23	−20.24	−4.41	−0.10	1.34	1.81	1.90	1.81	1.56
	0.8	−163.91	−26.77	−6.09	−0.45	1.43	2.04	2.16	2.03	1.69
	0.9	−207.76	−34.17	−7.99	−0.85	1.53	2.30	2.44	2.28	1.82
	1.0	−256.79	−42.45	−10.12	−1.30	1.63	2.58	2.75	2.54	1.95
0.5	0.2	−6.03	0.04	0.91	1.13	1.20	1.22	1.24	1.29	1.44
	0.3	−15.35	−1.46	0.56	1.09	1.25	1.30	1.32	1.35	1.46
	0.4	−28.59	−3.67	−0.01	0.96	1.26	1.34	1.35	1.32	1.29
	0.5	−45.45	−6.42	−0.66	0.85	1.33	1.45	1.45	1.38	1.24
	0.6	−65.92	−9.70	−1.41	0.78	1.46	1.64	1.63	1.53	1.32
	0.7	−90.12	−13.58	−2.29	0.69	1.61	1.86	1.85	1.70	1.39
	0.8	−118.07	−18.07	−3.32	0.57	1.78	2.11	2.09	1.89	1.46
	0.9	−149.75	−23.18	−4.49	0.43	1.96	2.38	2.35	2.09	1.53
	1.0	−185.19	−28.89	−5.81	0.27	2.16	2.67	2.63	2.31	1.57
0.6	0.2	−4.20	0.39	1.03	1.18	1.22	1.24	1.26	1.30	1.47
	0.3	−11.33	−0.72	0.79	1.16	1.27	1.30	1.31	1.33	1.43
	0.4	−21.57	−2.42	0.35	1.05	1.25	1.29	1.27	1.22	1.12
	0.5	−34.29	−4.35	−0.03	1.07	1.38	1.44	1.41	1.32	1.16
	0.6	−49.85	−6.73	−0.50	1.08	1.54	1.63	1.57	1.45	1.19
	0.7	−68.26	−9.55	−1.06	1.09	1.71	1.83	1.76	1.58	1.21
	0.8	−89.52	−12.81	−1.72	1.10	1.91	2.07	1.97	1.73	1.22
	0.9	−113.64	−16.52	−2.47	1.10	2.12	2.32	2.20	1.88	1.21
	1.0	−140.62	−20.68	−3.33	1.09	2.35	2.60	2.44	2.03	1.16

ED5-3 Tee, D_c < or = 10 in., Converging (Continued)

		C_b Values (*Concluded*)								
		Q_b/Q_c								
A_s/A_c	A_b/A_c	0.1	0.2	0.3	0.4	0.5	0.6	0.7	0.8	0.9
0.7	0.2	−3.00	0.62	1.10	1.21	1.23	1.24	1.26	1.31	1.49
	0.3	−8.74	−0.27	0.91	1.19	1.26	1.27	1.27	1.28	1.36
	0.4	−16.90	−1.59	0.58	1.11	1.25	1.27	1.24	1.18	1.06
	0.5	−26.99	−3.06	0.33	1.17	1.38	1.41	1.36	1.26	1.06
	0.6	−39.35	−4.86	0.02	1.22	1.54	1.57	1.50	1.35	1.05
	0.7	−53.97	−7.01	−0.35	1.29	1.72	1.76	1.63	1.45	1.02
	0.8	−70.87	−9.50	−0.79	1.35	1.91	1.97	1.82	1.54	0.96
	0.9	−90.04	−12.34	−1.31	1.41	2.12	2.19	2.00	1.64	0.86
	1.0	−111.50	−15.53	−1.89	1.46	2.34	2.43	2.19	1.73	0.72
0.8	0.2	−2.20	0.76	1.14	1.22	1.24	1.24	1.26	1.31	1.49
	0.3	−7.04	−0.01	0.95	1.18	1.23	1.23	1.23	1.22	1.27
	0.4	−13.77	−1.06	0.71	1.13	1.24	1.24	1.20	1.13	1.00
	0.5	−22.11	−2.24	0.54	1.20	1.36	1.36	1.30	1.19	0.97
	0.6	−32.33	−3.69	0.31	1.27	1.50	1.50	1.41	1.25	0.90
	0.7	−44.42	−5.41	0.04	1.34	1.66	1.65	1.53	1.30	0.81
	0.8	−58.40	−7.42	−0.29	1.42	1.83	1.83	1.65	1.35	0.67
	0.9	−74.28	−9.72	−0.67	1.49	2.01	2.01	1.78	1.38	0.49
	1.0	−92.06	−12.30	−1.12	1.56	2.21	2.20	1.92	1.40	0.24
0.9	0.2	−1.67	0.85	1.16	1.22	1.23	1.24	1.25	1.30	1.48
	0.3	−5.95	0.12	0.95	1.14	1.18	1.18	1.16	1.15	1.14
	0.4	−11.68	−0.74	0.77	1.12	1.20	1.20	1.16	1.08	0.93
	0.5	−18.85	−1.74	0.63	1.18	1.31	1.30	1.23	1.11	0.86
	0.6	−27.63	−2.98	0.44	1.24	1.42	1.41	1.31	1.13	0.75
	0.7	−38.04	−4.45	0.21	1.30	1.55	1.53	1.39	1.14	0.58
	0.8	−50.07	−6.17	−0.07	1.36	1.69	1.66	1.47	1.13	0.37
	0.9	−63.75	−8.14	−0.40	1.42	1.83	1.79	1.54	1.11	0.09
	1.0	−79.08	−10.36	−0.79	1.46	1.98	1.92	1.61	1.06	−0.26
1.0	0.2	−1.33	0.89	1.16	1.21	1.22	1.22	1.24	1.29	1.46
	0.3	−5.30	0.15	0.90	1.08	1.11	1.11	1.09	1.06	0.99
	0.4	−10.31	−0.57	0.78	1.09	1.16	1.15	1.11	1.03	0.86
	0.5	−16.71	−1.47	0.64	1.13	1.24	1.22	1.15	1.03	0.74
	0.6	−24.56	−2.59	0.46	1.17	1.32	1.30	1.20	1.01	0.57
	0.7	−33.87	−3.93	0.23	1.20	1.41	1.38	1.24	0.97	0.34
	0.8	−44.64	−5.49	−0.05	1.22	1.51	1.46	1.27	0.91	0.05
	0.9	−56.89	−7.29	−0.38	1.24	1.59	1.54	1.28	0.82	−0.33
	1.0	−70.62	−9.32	−0.77	1.24	1.68	1.61	1.28	0.69	−0.80

ED5-3 Tee, D_c < or = 10 in., Converging

		C_s Values								
		Q_s/Q_c								
A_s/A_c	A_b/A_c	0.1	0.2	0.3	0.4	0.5	0.6	0.7	0.8	0.9
0.2	0.2	18.11	3.42	1.62	1.11	0.90	0.80	0.74	0.70	0.68
	0.3	12.67	2.79	1.45	1.04	0.87	0.78	0.73	0.70	0.68
	0.4	9.98	2.47	1.36	1.01	0.85	0.77	0.72	0.69	0.67
	0.5	8.39	2.27	1.30	0.98	0.84	0.76	0.72	0.69	0.67
	0.6	7.34	2.13	1.26	0.96	0.83	0.76	0.72	0.69	0.67
	0.7	6.61	2.02	1.22	0.95	0.82	0.75	0.71	0.69	0.67
	0.8	6.08	1.94	1.19	0.93	0.81	0.75	0.71	0.68	0.67
	0.9	5.68	1.87	1.17	0.92	0.80	0.74	0.70	0.68	0.66
	1.0	4.55	1.61	1.05	0.86	0.76	0.71	0.68	0.66	0.65
0.3	0.2	44.33	7.19	2.80	1.57	1.08	0.84	0.71	0.63	0.57
	0.3	29.24	5.46	2.35	1.40	1.00	0.80	0.69	0.62	0.57
	0.4	21.88	4.59	2.09	1.30	0.96	0.78	0.67	0.61	0.56
	0.5	17.62	4.06	1.93	1.24	0.92	0.76	0.66	0.60	0.56
	0.6	14.90	3.71	1.82	1.19	0.90	0.74	0.65	0.59	0.55
	0.7	13.06	3.45	1.74	1.15	0.88	0.73	0.64	0.59	0.55
	0.8	11.78	3.26	1.67	1.12	0.86	0.72	0.63	0.58	0.54
	0.9	9.02	2.64	1.41	0.97	0.77	0.66	0.59	0.54	0.51
	1.0	8.36	2.52	1.36	0.95	0.75	0.65	0.58	0.54	0.51

ED5-3 Tee, D_c < or = 10 in., Converging (Continued)

		C_s Values (Concluded)								
		Q_s/Q_c								
A_s/A_c	A_b/A_c	0.1	0.2	0.3	0.4	0.5	0.6	0.7	0.8	0.9
0.4	0.2	78.99	12.25	4.42	2.26	1.39	0.97	0.74	0.60	0.50
	0.3	50.14	8.96	3.54	1.92	1.24	0.90	0.70	0.57	0.49
	0.4	36.26	7.32	3.08	1.74	1.16	0.85	0.67	0.56	0.48
	0.5	28.38	6.35	2.80	1.63	1.10	0.82	0.65	0.54	0.47
	0.6	23.50	5.72	2.61	1.54	1.05	0.79	0.63	0.53	0.46
	0.7	20.32	5.27	2.46	1.47	1.02	0.77	0.62	0.52	0.45
	0.8	14.94	4.13	1.98	1.21	0.85	0.65	0.53	0.46	0.40
	0.9	13.55	3.88	1.89	1.16	0.82	0.63	0.52	0.45	0.39
	1.0	12.66	3.69	1.80	1.12	0.79	0.62	0.51	0.44	0.39
0.5	0.2	114.73	17.76	6.27	3.07	1.79	1.16	0.81	0.60	0.46
	0.3	70.56	12.71	4.92	2.56	1.56	1.05	0.75	0.56	0.44
	0.4	49.68	10.24	4.23	2.29	1.43	0.98	0.71	0.54	0.42
	0.5	38.12	8.81	3.81	2.11	1.34	0.93	0.68	0.52	0.41
	0.6	31.23	7.90	3.53	1.99	1.27	0.88	0.65	0.50	0.39
	0.7	21.87	6.00	2.75	1.57	1.01	0.71	0.52	0.40	0.32
	0.8	19.30	5.57	2.59	1.49	0.96	0.67	0.50	0.38	0.30
	0.9	17.84	5.27	2.46	1.42	0.92	0.65	0.48	0.37	0.29
	1.0	17.16	5.05	2.36	1.36	0.88	0.62	0.46	0.35	0.28
0.6	0.2	142.32	22.64	8.06	3.91	2.23	1.39	0.92	0.63	0.44
	0.3	84.89	16.05	6.28	3.24	1.92	1.23	0.83	0.58	0.41
	0.4	58.43	12.90	5.39	2.88	1.75	1.14	0.78	0.55	0.39
	0.5	44.34	11.13	4.86	2.66	1.63	1.07	0.74	0.52	0.37
	0.6	29.06	8.20	3.69	2.04	1.25	0.81	0.55	0.38	0.26
	0.7	24.71	7.51	3.44	1.91	1.18	0.77	0.52	0.35	0.24
	0.8	22.56	7.06	3.26	1.81	1.11	0.72	0.48	0.33	0.22
	0.9	21.89	6.78	3.12	1.73	1.06	0.68	0.45	0.30	0.20
	1.0	22.24	6.61	3.00	1.65	1.00	0.65	0.43	0.28	0.18
0.7	0.2	152.32	25.82	9.48	4.66	2.65	1.63	1.04	0.68	0.44
	0.3	87.85	18.38	7.46	3.88	2.29	1.44	0.94	0.62	0.40
	0.4	59.34	14.92	6.47	3.48	2.09	1.33	0.87	0.58	0.37
	0.5	35.18	10.56	4.78	2.60	1.55	0.97	0.62	0.38	0.22
	0.6	28.26	9.51	4.41	2.42	1.45	0.90	0.57	0.35	0.19
	0.7	25.45	8.91	4.16	2.28	1.36	0.85	0.53	0.32	0.17
	0.8	25.21	8.60	3.99	2.18	1.29	0.79	0.49	0.28	0.14
	0.9	26.68	8.48	3.86	2.08	1.22	0.74	0.45	0.25	0.12
	1.0	29.34	8.49	3.77	2.01	1.16	0.70	0.41	0.22	0.10
0.8	0.2	136.74	26.38	10.30	5.22	3.01	1.85	1.17	0.74	0.45
	0.3	75.52	19.20	8.32	4.45	2.64	1.66	1.06	0.67	0.41
	0.4	37.55	12.79	5.92	3.23	1.91	1.17	0.72	0.42	0.21
	0.5	27.25	11.28	5.41	2.98	1.77	1.08	0.66	0.37	0.18
	0.6	24.23	10.57	5.10	2.81	1.66	1.01	0.60	0.33	0.14
	0.7	25.36	10.32	4.91	2.69	1.57	0.94	0.55	0.29	0.11
	0.8	29.09	10.37	4.80	2.59	1.50	0.88	0.50	0.25	0.08
	0.9	34.55	10.60	4.74	2.50	1.42	0.82	0.46	0.21	0.05
	1.0	41.23	10.98	4.71	2.43	1.36	0.77	0.41	0.18	0.01
0.9	0.2	90.70	23.73	10.34	5.54	3.28	2.05	1.30	0.81	0.47
	0.3	29.93	14.20	6.95	3.86	2.30	1.41	0.85	0.48	0.22
	0.4	16.27	12.21	6.28	3.55	2.12	1.29	0.77	0.42	0.18
	0.5	14.80	11.58	5.96	3.35	1.99	1.20	0.70	0.37	0.14
	0.6	19.43	11.62	5.81	3.23	1.89	1.13	0.64	0.32	0.10
	0.7	27.55	12.06	5.77	3.14	1.81	1.06	0.59	0.27	0.06
	0.8	37.84	12.73	5.79	3.07	1.74	0.99	0.53	0.23	0.02
	0.9	49.59	13.57	5.85	3.01	1.67	0.93	0.48	0.18	−0.02
	1.0	62.35	14.52	5.94	2.97	1.61	0.87	0.42	0.14	−0.06
1.0	0.2	−6.40	12.70	7.32	4.31	2.64	1.64	1.00	0.56	0.25
	0.3	−17.35	10.90	6.66	3.97	2.44	1.51	0.90	0.49	0.20
	0.4	−11.05	11.02	6.50	3.82	2.32	1.41	0.83	0.42	0.15
	0.5	2.15	11.91	6.54	3.74	2.23	1.33	0.76	0.38	0.10
	0.6	18.80	13.18	6.67	3.70	2.16	1.26	0.70	0.32	0.06
	0.7	37.42	14.67	6.86	3.68	2.09	1.19	0.63	0.26	0.01
	0.8	57.27	16.30	7.09	3.67	2.03	1.12	0.57	0.21	−0.04
	0.9	77.95	18.02	7.35	3.66	1.97	1.06	0.51	0.15	−0.09
	1.0	99.20	19.80	7.61	3.67	1.92	1.00	0.45	0.10	−0.14

ED5–3 Tee, D_c > 10 in., Converging *(Continued)*

		C_b Values								
		Q_s/Q_c								
A_s/A_c	A_b/A_c	0.1	0.2	0.3	0.4	0.5	0.6	0.7	0.8	0.9
0.2	0.2	−26.08	−4.19	−0.70	0.33	0.71	0.87	0.93	0.95	0.93
	0.3	−59.71	−10.53	−2.72	−0.43	0.13	0.78	0.91	0.95	0.91
	0.4	−106.78	−19.39	−5.53	−1.46	0.05	0.67	0.91	0.97	0.91
	0.5	−167.36	−30.77	−9.12	−2.78	−0.42	0.55	0.93	1.02	0.93
	0.6	−241.50	−44.68	−13.50	−4.37	−0.97	0.42	0.96	1.10	0.98
	0.7	−329.25	−61.15	−18.68	−6.25	−1.62	0.27	1.02	1.21	1.06
	0.8	−430.67	−80.18	−24.67	−8.42	−2.37	0.10	1.09	1.35	1.17
	0.9	−545.81	−101.78	−31.47	−10.89	−3.22	−0.08	1.17	1.52	1.31
	1.0	−674.72	−125.98	−39.08	−13.64	−4.17	−0.28	1.28	1.72	1.48
0.3	0.2	−15.50	−2.16	−0.04	0.58	0.81	0.90	0.93	0.94	0.91
	0.3	−35.76	−5.90	−1.20	0.16	0.66	0.85	0.92	0.92	0.88
	0.4	−64.09	−11.09	−2.78	−0.38	0.48	0.82	0.93	0.94	0.86
	0.5	−100.54	−17.73	−4.78	−1.06	0.29	0.80	0.97	0.98	0.87
	0.6	−145.16	−25.85	−7.21	−1.86	0.06	0.80	1.05	1.05	0.90
	0.7	−198.01	−35.46	−10.08	−2.81	−0.19	0.82	1.15	1.16	0.96
	0.8	−259.13	−46.56	−13.39	−3.89	−0.47	0.85	1.28	1.30	1.05
	0.9	−328.59	−59.18	−17.15	−5.11	−0.78	0.89	1.44	1.47	1.17
	1.0	−406.44	−73.33	−21.37	−6.48	−1.12	0.94	1.63	1.68	1.32
0.4	0.2	−10.31	−1.18	0.26	0.69	0.84	0.91	0.93	0.93	0.90
	0.3	−23.96	−3.65	−0.48	0.43	0.75	0.88	0.91	0.91	0.86
	0.4	−42.98	−7.03	−1.46	0.11	0.67	0.87	0.93	0.91	0.84
	0.5	−67.44	−11.35	−2.69	−0.26	0.59	0.90	0.97	0.94	0.84
	0.6	−97.39	−16.60	−4.17	−0.69	0.52	0.95	1.06	1.01	0.87
	0.7	−132.88	−22.81	−5.91	−1.17	0.46	1.03	1.17	1.11	0.92
	0.8	−173.96	−29.99	−7.90	−1.73	0.40	1.15	1.33	1.24	1.00
	0.9	−220.69	−38.15	−10.16	−2.35	0.35	1.29	1.51	1.40	1.11
	1.0	−273.12	−47.31	−12.70	−3.04	0.29	1.45	1.74	1.61	1.26
0.5	0.2	−7.26	−0.62	0.43	0.75	0.86	0.91	0.93	0.93	0.90
	0.3	−16.99	−2.35	−0.07	0.57	0.80	0.89	0.91	0.90	0.87
	0.4	−30.49	−4.67	−0.72	0.38	0.76	0.89	0.92	0.90	0.85
	0.5	−47.82	−7.61	−1.50	0.19	0.75	0.93	0.97	0.93	0.85
	0.6	−69.03	−11.17	−2.42	−0.03	0.76	1.01	1.05	0.98	0.88
	0.7	−94.17	−15.37	−3.49	−0.26	0.80	1.13	1.17	1.07	0.93
	0.8	−123.30	−20.22	−4.71	−0.50	0.87	1.29	1.33	1.20	1.02
	0.9	−156.48	−25.73	−6.09	−0.77	0.96	1.48	1.53	1.36	1.13
	1.0	−193.74	−31.92	−7.63	−1.07	1.06	1.71	1.77	1.56	1.28
0.6	0.2	−5.28	−0.27	0.54	0.78	0.88	0.91	0.93	0.93	0.91
	0.3	−12.43	−1.51	0.18	0.66	0.83	0.89	0.91	0.91	0.89
	0.4	−22.29	−3.15	−0.25	0.55	0.82	0.90	0.92	0.91	0.88
	0.5	−34.92	−5.19	−0.74	0.46	0.84	0.95	0.96	0.93	0.89
	0.6	−50.35	−7.64	−1.30	0.38	0.91	1.05	1.04	0.98	0.93
	0.7	−68.66	−10.52	−1.94	0.32	1.01	1.18	1.16	1.07	0.99
	0.8	−89.89	−13.83	−2.65	0.26	1.15	1.36	1.33	1.19	1.08
	0.9	−114.09	−17.61	−3.46	0.22	1.32	1.59	1.53	1.35	1.21
	1.0	−141.33	−21.84	−4.35	0.18	1.54	1.85	1.77	1.54	1.37
0.7	0.2	−3.90	−0.03	0.61	0.81	0.89	0.92	0.94	0.94	0.93
	0.3	−9.25	−0.94	0.35	0.72	0.85	0.90	0.92	0.92	0.92
	0.4	−16.54	−2.10	0.07	0.66	0.85	0.91	0.93	0.92	0.92
	0.5	−25.85	−3.51	−0.22	0.64	0.90	0.97	0.97	0.94	0.95
	0.6	−37.21	−5.18	−0.54	0.65	1.00	1.07	1.03	1.00	1.00
	0.7	−50.68	−7.13	−0.87	0.70	1.14	1.22	1.17	1.08	1.08
	0.8	−66.31	−9.37	−1.24	0.78	1.33	1.41	1.33	1.21	1.20
	0.9	−84.17	−11.92	−1.64	0.89	1.56	1.65	1.53	1.36	1.34
	1.0	−104.29	−14.78	−2.09	1.03	1.84	1.94	1.78	1.56	1.52
0.8	0.2	−2.90	0.15	0.67	0.83	0.90	0.93	0.94	0.95	0.96
	0.3	−6.91	−0.53	0.47	0.76	0.87	0.91	0.93	0.94	0.96
	0.4	−12.31	−1.34	0.30	0.74	0.88	0.93	0.94	0.95	0.98
	0.5	−19.16	−2.29	0.15	0.77	0.94	0.99	0.98	0.98	1.03
	0.6	−27.50	−3.39	0.01	0.84	1.06	1.09	1.06	1.03	1.11
	0.7	−37.38	−4.66	−0.11	0.97	1.23	1.24	1.18	1.12	1.21
	0.8	−48.87	−6.11	−0.22	1.15	1.46	1.45	1.35	1.25	1.35
	0.9	−62.01	−7.75	−0.33	1.37	1.73	1.70	1.55	1.41	1.52
	1.0	−76.85	−9.59	−0.44	1.63	2.06	2.00	1.80	1.61	1.73

ED5-3 Tee, D_c > 10 in., Converging *(Continued)*

		C_b Values (*Concluded*)								
		Q_b/Q_c								
A_s/A_c	A_b/A_c	0.1	0.2	0.3	0.4	0.5	0.6	0.7	0.8	0.9
0.9	0.2	−2.14	0.28	0.71	0.85	0.91	0.94	0.96	0.97	0.99
	0.3	−5.14	−0.21	0.57	0.80	0.88	0.92	0.95	0.97	1.02
	0.4	−9.09	−0.76	0.47	0.80	0.91	0.94	0.96	0.98	1.06
	0.5	−14.06	−1.36	0.42	0.86	0.98	1.01	1.01	1.02	1.14
	0.6	−20.08	−2.04	0.42	0.99	1.11	1.12	1.09	1.09	1.24
	0.7	−27.21	−2.79	0.47	1.17	1.30	1.27	1.21	1.19	1.38
	0.8	−35.50	−3.63	0.55	1.42	1.55	1.49	1.38	1.32	1.55
	0.9	−45.01	−4.57	0.66	1.72	1.86	1.75	1.59	1.49	1.75
	1.0	−55.79	−5.64	0.80	2.08	2.22	2.06	1.84	1.69	1.99
1.0	0.2	−1.54	0.39	0.74	0.87	0.92	0.95	0.97	0.99	1.03
	0.3	−3.75	0.03	0.64	0.83	0.90	0.94	0.97	1.00	1.08
	0.4	−6.57	−0.32	0.61	0.85	0.93	0.97	0.99	1.03	1.16
	0.5	−10.05	−0.65	0.64	0.94	1.02	1.03	1.04	1.08	1.26
	0.6	−14.24	−0.98	0.74	1.10	1.16	1.15	1.13	1.16	1.40
	0.7	−19.20	−1.32	0.91	1.33	1.37	1.31	1.26	1.27	1.57
	0.8	−24.98	−1.69	1.14	1.63	1.63	1.53	1.43	1.41	1.78
	0.9	−31.62	−2.10	1.42	2.00	1.96	1.80	1.64	1.59	2.02
	1.0	−39.19	−2.55	1.76	2.43	2.35	2.12	1.90	1.81	2.30

ED5-3 Tee, D_c > 10 in., Converging

		C_s Values								
		Q_s/Q_c								
A_s/A_c	A_b/A_c	0.1	0.2	0.3	0.4	0.5	0.6	0.7	0.8	0.9
0.2	0.2	20.43	3.28	1.45	0.98	0.81	0.73	0.69	0.66	0.64
	0.3	12.53	2.40	1.22	0.90	0.77	0.71	0.68	0.66	0.64
	0.4	8.78	1.98	1.12	0.86	0.76	0.70	0.67	0.66	0.64
	0.5	6.69	1.75	1.06	0.84	0.75	0.70	0.67	0.65	0.64
	0.6	5.43	1.61	1.02	0.83	0.74	0.70	0.67	0.65	0.64
	0.7	4.64	1.52	1.00	0.82	0.74	0.70	0.67	0.65	0.64
	0.8	4.15	1.47	0.98	0.81	0.74	0.69	0.67	0.65	0.64
	0.9	3.86	1.43	0.97	0.81	0.74	0.69	0.67	0.65	0.64
	1.0	3.71	1.42	0.97	0.81	0.73	0.69	0.67	0.65	0.64
0.3	0.2	51.24	7.11	2.49	1.33	0.90	0.70	0.60	0.54	0.50
	0.3	29.57	4.70	1.87	1.10	0.80	0.66	0.58	0.53	0.50
	0.4	19.40	3.57	1.58	1.00	0.76	0.64	0.57	0.52	0.50
	0.5	13.84	2.96	1.42	0.94	0.73	0.62	0.56	0.52	0.50
	0.6	10.58	2.59	1.32	0.90	0.72	0.62	0.56	0.52	0.49
	0.7	8.64	2.38	1.27	0.88	0.71	0.61	0.56	0.52	0.49
	0.8	7.52	2.25	1.23	0.87	0.70	0.61	0.56	0.52	0.49
	0.9	6.95	2.19	1.22	0.87	0.70	0.61	0.56	0.52	0.49
	1.0	6.76	2.17	1.21	0.86	0.70	0.61	0.55	0.52	0.49
0.4	0.2	90.30	12.10	3.91	1.85	1.08	0.74	0.55	0.45	0.38
	0.3	49.68	7.59	2.74	1.42	0.90	0.65	0.51	0.43	0.37
	0.4	30.96	5.51	2.21	1.23	0.82	0.61	0.49	0.42	0.37
	0.5	21.00	4.40	1.92	1.13	0.78	0.59	0.48	0.42	0.37
	0.6	15.43	3.78	1.76	1.07	0.75	0.58	0.48	0.41	0.37
	0.7	12.36	3.44	1.67	1.04	0.74	0.57	0.48	0.41	0.37
	0.8	10.86	3.27	1.63	1.02	0.73	0.57	0.47	0.41	0.37
	0.9	10.40	3.22	1.61	1.01	0.73	0.57	0.47	0.41	0.37
	1.0	10.67	3.25	1.62	1.02	0.73	0.57	0.47	0.41	0.37
0.5	0.2	126.36	16.99	5.39	2.42	1.32	0.81	0.54	0.38	0.28
	0.3	65.94	10.28	3.65	1.79	1.05	0.68	0.48	0.35	0.27
	0.4	38.84	7.27	2.87	1.51	0.93	0.63	0.45	0.34	0.27
	0.5	25.07	5.74	2.47	1.37	0.87	0.60	0.44	0.33	0.26
	0.6	17.98	4.95	2.27	1.29	0.84	0.58	0.43	0.33	0.26
	0.7	14.69	4.58	2.17	1.26	0.82	0.58	0.43	0.33	0.26
	0.8	13.78	4.48	2.15	1.25	0.82	0.57	0.43	0.33	0.26
	0.9	14.45	4.56	2.17	1.26	0.82	0.58	0.43	0.33	0.26
	1.0	16.24	4.76	2.22	1.28	0.83	0.58	0.43	0.33	0.26

ED5–3 Tee, D_c > 10 in., Converging (Continued)

		C_f Values (*Concluded*)								
		Q_s/Q_c								
A_s/A_c	A_b/A_c	0.1	0.2	0.3	0.4	0.5	0.6	0.7	0.8	0.9
0.6	0.2	146.22	20.32	6.54	2.92	1.54	0.89	0.54	0.33	0.20
	0.3	70.93	11.95	4.37	2.13	1.20	0.73	0.46	0.30	0.18
	0.4	38.66	8.37	3.44	1.80	1.06	0.67	0.43	0.28	0.18
	0.5	23.61	6.70	3.00	1.64	0.99	0.64	0.42	0.28	0.18
	0.6	17.17	5.98	2.82	1.57	0.97	0.62	0.41	0.27	0.18
	0.7	15.64	5.81	2.77	1.56	0.96	0.62	0.41	0.27	0.18
	0.8	17.19	5.98	2.82	1.57	0.97	0.62	0.41	0.27	0.18
	0.9	20.79	6.38	2.92	1.61	0.98	0.63	0.42	0.27	0.18
	1.0	25.82	6.94	3.07	1.66	1.00	0.64	0.42	0.28	0.18
0.7	0.2	137.78	20.74	7.01	3.21	1.70	0.96	0.54	0.29	0.13
	0.3	58.74	11.96	4.73	2.39	1.34	0.79	0.47	0.26	0.12
	0.4	27.78	8.52	3.84	2.06	1.21	0.73	0.44	0.24	0.11
	0.5	16.04	7.21	3.50	1.94	1.15	0.71	0.43	0.24	0.11
	0.6	13.91	6.97	3.44	1.92	1.14	0.70	0.42	0.24	0.11
	0.7	17.28	7.35	3.54	1.95	1.16	0.71	0.43	0.24	0.11
	0.8	24.08	8.10	3.73	2.02	1.19	0.72	0.43	0.24	0.11
	0.9	33.17	9.11	3.99	2.12	1.23	0.74	0.44	0.25	0.11
	1.0	43.86	10.30	4.30	2.23	1.28	0.76	0.45	0.25	0.11
0.8	0.2	92.97	17.35	6.57	3.21	1.75	0.99	0.55	0.27	0.08
	0.3	26.98	10.02	4.67	2.52	1.46	0.86	0.48	0.24	0.07
	0.4	6.75	7.77	4.09	2.31	1.37	0.81	0.46	0.23	0.06
	0.5	4.83	7.56	4.03	2.29	1.36	0.81	0.46	0.23	0.06
	0.6	12.05	8.36	4.24	2.37	1.39	0.83	0.47	0.23	0.07
	0.7	24.51	9.75	4.60	2.49	1.45	0.85	0.48	0.24	0.07
	0.8	40.23	11.49	5.05	2.66	1.52	0.88	0.50	0.24	0.07
	0.9	58.13	13.48	5.57	2.85	1.60	0.92	0.51	0.25	0.07
	1.0	77.56	15.64	6.13	3.05	1.68	0.96	0.53	0.26	0.08
0.9	0.2	10.77	10.05	5.20	2.91	1.70	0.99	0.55	0.25	0.04
	0.3	−21.27	6.49	4.28	2.57	1.56	0.93	0.52	0.24	0.04
	0.4	−19.11	6.73	4.34	2.60	1.57	0.93	0.52	0.24	0.04
	0.5	−3.28	8.49	4.80	2.76	1.64	0.97	0.54	0.24	0.04
	0.6	19.39	11.01	5.45	3.00	1.74	1.01	0.56	0.25	0.04
	0.7	45.97	13.96	6.21	3.27	1.86	1.07	0.58	0.27	0.05
	0.8	74.99	17.18	7.05	3.58	1.98	1.13	0.61	0.28	0.05
	0.9	105.64	20.59	7.93	3.89	2.12	1.19	0.64	0.29	0.06
	1.0	137.43	24.12	8.85	4.23	2.26	1.26	0.67	0.31	0.06
1.0	0.2	−99.78	−0.17	3.15	2.40	1.58	0.98	0.56	0.25	0.02
	0.3	−75.42	2.54	3.85	2.65	1.69	1.03	0.58	0.26	0.03
	0.4	−38.31	6.66	4.92	3.04	1.86	1.11	0.62	0.28	0.03
	0.5	3.90	11.35	6.14	3.48	2.04	1.20	0.66	0.29	0.04
	0.6	48.66	16.32	7.43	3.94	2.24	1.29	0.70	0.31	0.04
	0.7	94.88	21.46	8.76	4.43	2.45	1.38	0.75	0.33	0.05
	0.8	142.01	26.70	10.12	4.92	2.66	1.48	0.79	0.35	0.06
	0.9	189.74	32.00	11.49	5.41	2.87	1.58	0.84	0.37	0.07
	1.0	237.90	37.35	12.88	5.92	3.08	1.68	0.88	0.39	0.07

ED5-6 Capped Wye, Branch with 45-Degree Elbow, Branch 90 Degrees to Main, Converging, $r/D_b = 1.5$

A_b/A_c	0.1	0.2	0.3	0.4	0.5	0.6	0.7	0.8	0.9	1.0
C_b	1.26	1.07	0.94	0.86	0.81	0.76	0.71	0.67	0.64	0.64

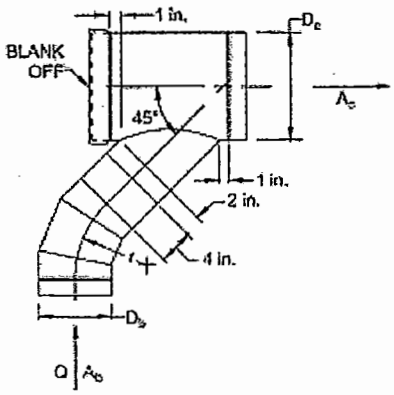

ED5-9 Symmetrical Wye, 60 Degree, $D_{b1} \geq D_{b2}$, Converging

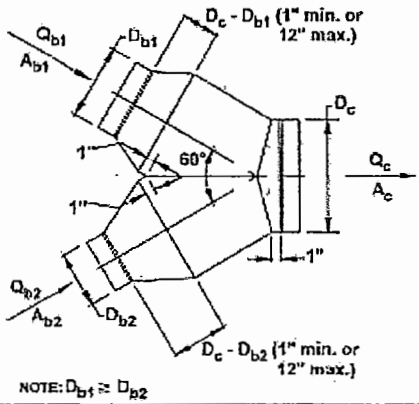

NOTE: $D_{b1} \geq D_{b2}$

		C_{b1} Values								
		Q_{b1}/Q_c								
A_{b1}/A_c	A_{b2}/A_c	0.1	0.2	0.3	0.4	0.5	0.6	0.7	0.8	0.9
0.2	0.2	−11.95	−1.89	−0.09	0.41	0.62	0.74	0.80	0.80	0.79
	0.3	−11.95	−1.89	−0.09	0.41	0.62	0.74	0.80	0.80	0.79
0.3	0.2	−45.45	−9.39	−2.44	−0.41	0.33	0.68	0.89	1.03	1.13
	0.3	−16.88	−2.92	−0.09	0.59	0.86	1.02	1.09	1.10	1.08
0.4	0.2	−72.04	−14.00	−4.26	−1.24	−0.10	0.33	0.50	0.57	0.63
	0.3	−52.95	−9.91	−2.86	−0.69	0.07	0.30	0.40	0.49	0.62
	0.4	−28.86	−6.22	−2.15	−0.57	0.19	0.55	0.72	0.79	0.85
0.5	0.2	−126.04	−23.80	−7.44	−2.64	−0.85	−0.13	0.16	0.26	0.28
	0.3	−91.07	−16.91	−5.16	−1.73	−0.46	0.04	0.23	0.29	0.28
	0.4	−56.41	−10.07	−2.90	−0.82	−0.07	0.21	0.30	0.31	0.29
	0.5	−30.58	−5.23	−1.06	0.00	0.32	0.43	0.47	0.47	0.41
0.6	0.2	−209.81	−39.31	−12.13	−4.35	−1.54	−0.40	0.06	0.22	0.23
	0.3	−147.43	−27.69	−8.73	−3.20	−1.15	−0.29	0.05	0.17	0.18
	0.4	−85.06	−16.07	−5.38	−2.04	−0.71	−0.17	0.04	0.12	0.13
	0.5	−58.22	−11.03	−3.84	−1.49	−0.50	−0.09	0.07	0.11	0.12
	0.6	−40.57	−7.86	−2.60	−0.89	−0.26	0.00	0.14	0.21	0.25
0.7	0.2	−291.57	−54.52	−17.03	−6.21	−2.27	−0.68	−0.04	0.19	0.21
	0.3	−197.37	−38.02	−12.54	−4.92	−2.01	−0.76	−0.22	0.01	0.08
	0.4	−102.97	−21.41	−8.05	−3.64	−1.75	−0.84	−0.40	−0.17	−0.05
	0.5	−65.15	−14.75	−6.16	−3.07	−1.61	−0.85	−0.44	−0.22	−0.09
	0.6	−48.24	−11.70	−4.97	−2.59	−1.40	−0.76	−0.37	−0.15	−0.03
	0.7	−73.02	−16.68	−6.90	−3.29	−1.61	−0.80	−0.29	0.02	0.22
0.8	0.2	−373.33	−69.73	−21.93	−8.08	−3.00	−0.95	−0.13	0.15	0.20
	0.3	−247.31	−48.35	−16.32	−6.65	−2.89	−1.24	−0.49	−0.15	−0.02
	0.4	−120.88	−26.76	−10.71	−5.24	−2.78	−1.52	−0.84	−0.45	−0.24

ED5-9 Symmetrical Wye, 60 Degree, $D_{b1} \geq D_{b2}$, Converging (Continued)

		C_{b1} Values (*Concluded*)								
		Q_{b1}/Q_c								
A_{b1}/A_c	A_{b2}/A_c	0.1	0.2	0.3	0.4	0.5	0.6	0.7	0.8	0.9
	0.5	−72.08	−18.46	−8.48	−4.65	−2.71	−1.61	−0.95	−0.55	−0.31
	0.6	−55.91	−15.54	−7.35	−4.20	−2.54	−1.53	−0.89	−0.51	−0.30
	0.7	−80.68	−20.52	−9.27	−4.90	−2.75	−1.56	−0.80	−0.34	−0.06
	0.8	−105.46	−25.49	−11.19	−5.59	−2.96	−1.60	−0.72	−0.18	0.19
0.9	0.2	−479.24	−89.56	−28.39	−10.59	−4.04	−1.41	−0.36	0.01	0.09
	0.3	−305.31	−61.27	−21.50	−9.28	−4.39	−2.16	−1.07	−0.54	−0.29
	0.4	−131.17	−32.88	−14.60	−7.98	−4.74	−2.91	−1.79	−1.10	−0.68
	0.5	−67.90	−22.76	−12.17	−7.53	−4.89	−3.19	−2.05	−1.30	−0.81
	0.6	−68.95	−23.08	−12.11	−7.45	−4.84	−3.15	−2.01	−1.26	−0.79
	0.7	−90.48	−27.35	−13.58	−7.95	−4.97	−3.16	−1.96	−1.17	−0.65
	0.8	−112.02	−31.63	−15.05	−8.44	−5.11	−3.18	−1.90	−1.07	−0.51
	0.9	−130.32	−35.19	−16.07	−8.70	−5.18	−3.19	−1.88	−1.08	−0.53
1.0	0.2	−585.16	−109.39	−34.85	−13.21	−5.09	−1.86	−0.59	−0.13	−0.01
	0.3	−363.31	−74.20	−26.68	−11.91	−5.90	−3.08	−1.66	−0.94	−0.56
	0.4	−141.46	−39.00	−18.50	−10.71	−6.71	−4.29	−2.74	−1.74	−1.12
	0.5	−63.71	−27.06	−15.85	−10.41	−7.07	−4.77	−3.16	−2.05	−1.31
	0.6	−81.99	−30.62	−16.87	−10.70	−7.13	−4.77	−3.13	−2.02	−1.28
	0.7	−100.28	−34.19	−17.89	−11.00	−7.19	−4.76	−3.11	−1.99	−1.24
	0.8	−118.58	−37.76	−18.91	−11.29	−7.26	−4.76	−3.09	−1.96	−1.20
	0.9	−136.88	−41.32	−19.93	−11.55	−7.32	−4.77	−3.07	−1.98	−1.23
	1.0	−155.18	−44.89	−20.95	−11.80	−7.39	−4.78	−3.05	−1.99	−1.25

		C_{b2} Values								
		Q_{b2}/Q_c								
A_{b1}/A_c	A_{b2}/A_c	0.1	0.2	0.3	0.4	0.5	0.6	0.7	0.8	0.9
0.2	0.2	−11.95	−1.89	−0.09	0.41	0.62	0.74	0.80	0.80	0.79
	0.3	−11.95	−1.89	−0.09	0.41	0.62	0.74	0.80	0.80	0.79
0.3	0.2	−8.24	−1.18	0.05	0.42	0.61	0.73	0.78	0.77	0.76
	0.3	−16.88	−2.92	−0.09	0.59	0.86	1.02	1.09	1.10	1.08
0.4	0.2	−6.95	−1.00	0.16	0.53	0.67	0.71	0.72	0.72	0.71
	0.3	−16.21	−2.50	−0.44	0.40	0.79	0.98	1.05	1.06	1.05
	0.4	−28.86	−6.22	−2.15	−0.57	0.19	0.55	0.72	0.79	0.85
0.5	0.2	−4.82	−0.01	0.56	0.71	0.82	0.89	0.92	0.90	0.89
	0.3	−12.27	−1.17	0.44	0.88	1.11	1.25	1.29	1.25	1.23
	0.4	−20.76	−2.93	−0.21	0.48	0.73	0.84	0.88	0.87	0.82
	0.5	−30.58	−5.23	−1.06	0.00	0.32	0.43	0.47	0.47	0.41
0.6	0.2	−3.68	0.07	0.77	0.98	1.06	1.08	1.08	1.06	1.04
	0.3	−9.06	−0.55	0.86	1.27	1.42	1.48	1.49	1.46	1.42
	0.4	−17.62	−2.12	0.06	0.60	0.83	0.95	0.98	0.95	0.91
	0.5	−28.00	−4.26	−0.99	−0.16	0.20	0.39	0.45	0.41	0.38
	0.6	−40.57	−7.86	−2.60	−0.99	−0.26	0.00	0.14	0.21	0.25
0.7	0.2	−5.44	−0.40	0.55	0.86	0.98	1.02	1.04	1.03	1.02
	0.3	−9.36	−0.77	0.73	1.20	1.39	1.47	1.49	1.47	1.44
	0.4	−19.57	−3.09	−0.44	0.36	0.71	0.89	0.97	0.98	0.97
	0.5	−31.88	−6.02	−1.90	−0.63	−0.05	0.26	0.40	0.44	0.46
	0.6	−46.44	−9.82	−3.47	−1.41	−0.48	−0.04	0.21	0.36	0.45
	0.7	−73.02	−16.68	−6.90	−3.29	−1.61	−0.80	−0.29	0.02	0.22
0.8	0.2	−7.21	−0.87	0.33	0.73	0.90	0.97	1.00	1.00	0.99
	0.3	−9.67	−0.99	0.60	1.13	1.36	1.45	1.49	1.48	1.46
	0.4	−21.53	−4.06	−0.93	0.11	0.59	0.83	0.96	1.01	1.03
	0.5	−35.77	−7.77	−2.82	−1.09	−0.29	0.13	0.35	0.48	0.55
	0.6	−52.32	−11.78	−4.34	−1.83	−0.70	−0.09	0.28	0.51	0.65
	0.7	−78.89	−18.64	−7.76	−3.71	−1.83	−0.85	−0.22	0.16	0.42
	0.8	−105.46	−25.49	−11.19	−5.59	−2.96	−1.60	−0.72	−0.18	0.19
0.9	0.2	−4.98	−0.34	0.54	0.85	0.97	1.03	1.04	1.03	1.01
	0.3	−9.97	−1.21	0.48	1.06	1.32	1.44	1.49	1.49	1.48
	0.4	−23.54	−4.98	−1.39	−0.12	0.47	0.78	0.95	1.04	1.09
	0.5	−40.14	−9.57	−3.69	−1.56	−0.55	−0.01	0.31	0.51	0.63
	0.6	−58.25	−14.28	−5.64	−2.53	−1.08	−0.30	0.18	0.49	0.70
	0.7	−84.09	−21.02	−8.91	−4.38	−2.22	−1.04	−0.31	0.15	0.46
	0.8	−109.92	−27.77	−12.18	−6.22	−3.35	−1.79	−0.81	−0.19	0.23
	0.9	−130.32	−35.19	−16.07	−8.70	−5.18	−3.19	−1.88	−1.08	−0.53
1.0	0.2	−2.75	0.19	0.76	0.96	1.05	1.08	1.08	1.06	1.04
	0.3	−10.28	−1.43	0.35	0.99	1.29	1.43	1.49	1.50	1.50
	0.4	−25.56	−5.89	−1.86	−0.36	0.35	0.72	0.93	1.07	1.15
	0.5	−44.52	−11.37	−4.56	−2.02	−0.81	−0.14	0.27	0.54	0.72
	0.6	−64.19	−16.77	−6.94	−3.24	−1.47	−0.50	0.09	0.48	0.74
	0.7	−89.28	−23.41	−10.05	−5.05	−2.61	−1.24	−0.40	0.14	0.50
	0.8	−114.38	−30.04	−13.16	−6.86	−3.75	−1.97	−0.89	−0.20	0.27
	0.9	−134.78	−37.47	−17.06	−9.33	−5.57	−3.38	−1.97	−1.09	−0.49
	1.0	−155.18	−44.89	−20.95	−11.80	−7.39	−4.78	−3.05	−1.99	−1.25

SD1-2 Conical Bellmouth/Sudden Contraction, Plenum to Round, Supply Air Systems (*Continued*)

		C_o Values (*Concluded*)									
		θ									
A_o/A_1	L/D_o	0	10	20	30	45	60	90	120	150	180
0.40	0.025	0.34	0.32	0.31	0.29	0.28	0.27	0.28	0.30	0.32	0.34
	0.050	0.34	0.31	0.28	0.25	0.22	0.20	0.23	0.26	0.30	0.34
	0.075	0.34	0.29	0.24	0.20	0.17	0.16	0.19	0.24	0.29	0.34
	0.100	0.34	0.27	0.22	0.17	0.14	0.12	0.17	0.22	0.28	0.34
	0.150	0.34	0.25	0.18	0.14	0.11	0.10	0.15	0.21	0.27	0.34
	0.300	0.34	0.23	0.16	0.12	0.10	0.10	0.15	0.21	0.27	0.34
	0.600	0.34	0.18	0.12	0.09	0.08	0.08	0.14	0.20	0.27	0.34
0.60	0.025	0.25	0.24	0.23	0.22	0.20	0.20	0.21	0.22	0.23	0.25
	0.050	0.25	0.23	0.21	0.18	0.16	0.15	0.17	0.19	0.22	0.25
	0.075	0.25	0.21	0.18	0.15	0.13	0.12	0.14	0.18	0.21	0.25
	0.100	0.25	0.20	0.16	0.13	0.11	0.09	0.12	0.16	0.21	0.25
	0.150	0.25	0.19	0.14	0.10	0.08	0.08	0.11	0.16	0.20	0.25
	0.300	0.25	0.17	0.12	0.09	0.07	0.07	0.11	0.15	0.20	0.25
	0.600	0.25	0.14	0.09	0.07	0.06	0.06	0.10	0.15	0.20	0.25
0.80	0.025	0.15	0.14	0.13	0.13	0.12	0.12	0.12	0.13	0.14	0.15
	0.050	0.15	0.13	0.12	0.11	0.10	0.09	0.10	0.12	0.13	0.15
	0.075	0.15	0.13	0.10	0.09	0.08	0.07	0.08	0.10	0.13	0.15
	0.100	0.15	0.12	0.10	0.07	0.06	0.05	0.07	0.10	0.12	0.15
	0.150	0.15	0.11	0.08	0.06	0.05	0.04	0.07	0.09	0.12	0.15
	0.300	0.15	0.10	0.07	0.05	0.04	0.04	0.07	0.09	0.12	0.15
	0.600	0.15	0.08	0.05	0.04	0.03	0.04	0.06	0.09	0.12	0.15
0.90	0.025	0.09	0.08	0.08	0.08	0.07	0.07	0.07	0.08	0.08	0.09
	0.050	0.09	0.08	0.07	0.06	0.06	0.05	0.06	0.07	0.08	0.09
	0.075	0.09	0.07	0.06	0.05	0.04	0.04	0.05	0.06	0.08	0.09
	0.100	0.09	0.07	0.06	0.04	0.04	0.03	0.04	0.06	0.07	0.09
	0.150	0.09	0.07	0.05	0.04	0.03	0.03	0.04	0.06	0.07	0.09
	0.300	0.09	0.06	0.04	0.03	0.03	0.02	0.04	0.05	0.07	0.09
	0.600	0.09	0.05	0.03	0.02	0.02	0.02	0.04	0.05	0.07	0.09

SD2-6 Stackhead

D_e/D	0.3	0.4	0.5	0.6	0.7	0.8	0.9	1.0
C_o	129	41.02	16.80	8.10	4.37	2.56	1.60	1.00

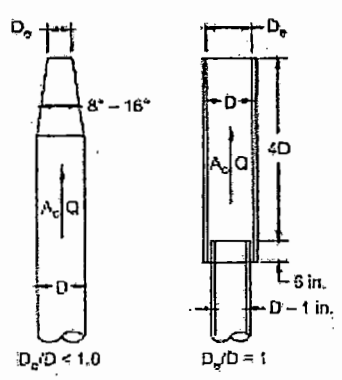

SD4-1 Transition, Round to Round, Supply Air Systems

	C_o Values									
	θ									
A_o/A_1	10	15	20	30	45	60	90	120	150	180
0.10	0.05	0.05	0.05	0.05	0.07	0.08	0.19	0.29	0.37	0.43
0.17	0.05	0.04	0.04	0.04	0.06	0.07	0.18	0.28	0.36	0.42
0.25	0.05	0.04	0.04	0.04	0.06	0.07	0.17	0.27	0.35	0.41
0.50	0.05	0.05	0.05	0.05	0.06	0.06	0.12	0.18	0.24	0.26
1.00	0.00	0.00	0.00	0.00	0.00	0.00	0.00	0.00	0.00	0.00
2.00	0.44	0.52	0.76	1.28	1.32	1.32	1.28	1.24	1.20	1.20
4.00	2.56	3.52	4.80	7.36	9.76	10.88	10.24	10.08	9.92	9.92
10.00	21.00	28.00	38.00	59.00	76.00	80.00	83.00	84.00	83.00	83.00
16.00	53.76	74.24	97.28	153.60	215.04	225.28	225.28	225.28	225.28	225.28

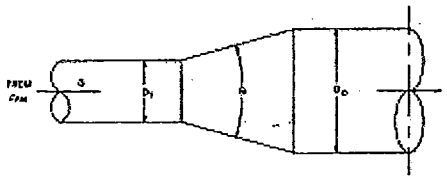

SD4-2 Transition, Rectangular to Round, Supply Air Systems

	C_o Values									
	θ									
A_o/A_1	10	15	20	30	45	60	90	120	150	180
0.10	0.05	0.05	0.05	0.05	0.07	0.08	0.19	0.29	0.37	0.43
0.17	0.05	0.05	0.04	0.04	0.06	0.07	0.18	0.28	0.36	0.42
0.25	0.06	0.05	0.05	0.04	0.06	0.07	0.17	0.27	0.35	0.41
0.50	0.06	0.07	0.07	0.05	0.06	0.06	0.12	0.18	0.24	0.26
1.00	0.00	0.00	0.00	0.00	0.00	0.00	0.00	0.00	0.00	0.00
2.00	0.60	0.84	1.00	1.20	1.32	1.32	1.32	1.28	1.24	1.20
4.00	4.00	5.76	7.20	8.32	9.28	9.92	10.24	10.24	10.24	10.24
10.00	30.00	50.00	53.00	64.00	75.00	84.00	89.00	91.00	91.00	88.00
16.00	76.80	138.24	135.68	166.40	197.12	225.28	243.20	250.88	250.88	238.08

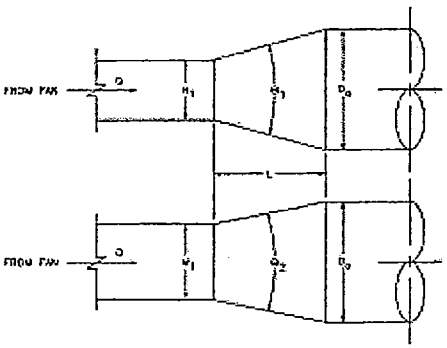

SD5-1 Wye, 45 Degree, Diverging

	C_b Values								
	Q_b/Q_c								
A_b/A_c	0.1	0.2	0.3	0.4	0.5	0.6	0.7	0.8	0.9
0.1	0.38	0.39	0.48						
0.2	2.25	0.38	0.31	0.39	0.46	0.48	0.45		
0.3	6.29	1.02	0.38	0.30	0.33	0.39	0.44	0.48	0.48
0.4	12.41	2.25	0.74	0.38	0.30	0.31	0.35	0.39	0.43
0.5	20.58	4.01	1.37	0.62	0.38	0.30	0.30	0.32	0.36
0.6	30.78	6.29	2.25	1.02	0.56	0.38	0.31	0.30	0.31
0.7	43.02	9.10	3.36	1.57	0.85	0.52	0.38	0.31	0.30
0.8	57.29	12.41	4.71	2.25	1.22	0.74	0.50	0.38	0.32
0.9	73.59	16.24	6.29	3.06	1.69	1.02	0.67	0.48	0.38

	C_s Values								
	Q_s/Q_c								
A_s/A_c	0.1	0.2	0.3	0.4	0.5	0.6	0.7	0.8	0.9
0.1	0.13	0.16							
0.2	0.20	0.13	0.15	0.16	0.28				
0.3	0.80	0.13	0.13	0.14	0.15	0.16	0.20		
0.4	2.88	0.20	0.14	0.13	0.14	0.15	0.15	0.16	0.34
0.5	6.25	0.37	0.17	0.14	0.13	0.14	0.14	0.15	0.15
0.6	11.88	0.90	0.20	0.13	0.14	0.13	0.14	0.14	0.15
0.7	18.62	1.71	0.33	0.18	0.16	0.14	0.13	0.15	0.14
0.8	26.88	2.88	0.50	0.20	0.15	0.14	0.13	0.13	0.14
0.9	36.45	4.46	0.90	0.30	0.19	0.16	0.15	0.14	0.13

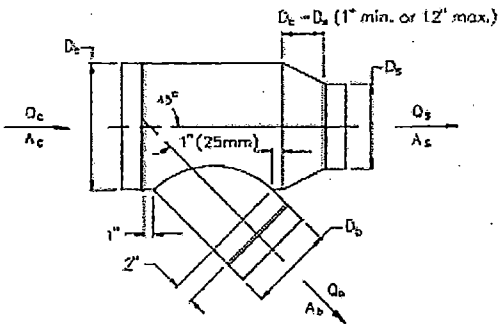

SD5-9 Tee, Diverging

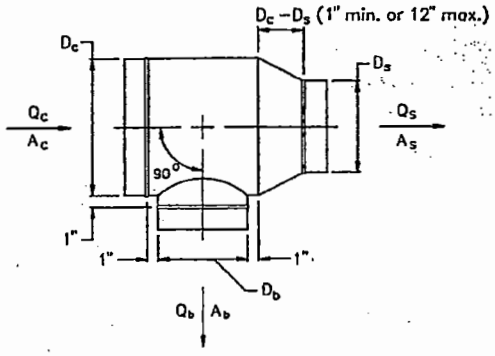

	C_b Values								
	Q_b/Q_c								
A_b/A_c	0.1	0.2	0.3	0.4	0.5	0.6	0.7	0.8	0.9
0.1	1.20	0.62	0.80	1.28	1.99	2.92	4.07	5.44	7.02
0.2	4.10	1.20	0.72	0.62	0.66	0.80	1.01	1.28	1.60
0.3	8.99	2.40	1.20	0.81	0.66	0.62	0.64	0.70	0.80
0.4	15.89	4.10	1.94	1.20	0.88	0.72	0.64	0.62	0.63
0.5	24.80	6.29	2.91	1.74	1.20	0.92	0.77	0.68	0.63
0.6	35.73	8.99	4.10	2.40	1.62	1.20	0.96	0.81	0.72
0.7	48.67	12.19	5.51	3.19	2.12	1.55	1.20	0.99	0.85
0.8	63.63	15.89	7.14	4.10	2.70	1.94	1.49	1.20	1.01
0.9	80.60	20.10	8.99	5.13	3.36	2.40	1.83	1.46	1.20

	C_s Values								
	Q_s/Q_c								
A_s/A_c	0.1	0.2	0.3	0.4	0.5	0.6	0.7	0.8	0.9
0.1	0.13	0.16							
0.2	0.20	0.13	0.15	0.16	0.28				
0.3	0.90	0.13	0.13	0.14	0.15	0.16	0.20		
0.4	2.88	0.20	0.14	0.13	0.14	0.15	0.15	0.16	0.34
0.5	6.25	0.37	0.17	0.14	0.13	0.14	0.14	0.15	0.15
0.6	11.88	0.90	0.20	0.13	0.14	0.13	0.14	0.14	0.15
0.7	18.62	1.71	0.33	0.18	0.16	0.14	0.13	0.15	0.14
0.8	26.88	2.88	0.50	0.20	0.15	0.14	0.13	0.13	0.14
0.9	36.45	4.46	0.90	0.30	0.19	0.16	0.15	0.14	0.13

SD5-10 Tee, Conical Branch Tapered into Body, Diverging

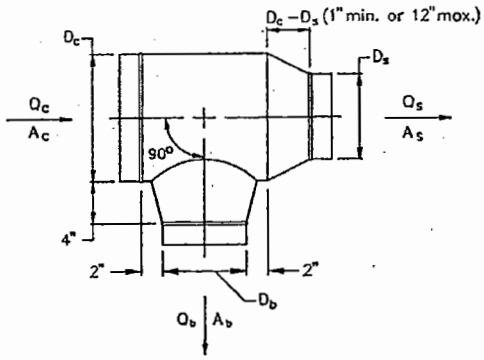

	C_b Values								
	Q_b/Q_c								
A_b/A_c	0.1	0.2	0.3	0.4	0.5	0.6	0.7	0.8	0.9
0.1	0.65	0.24							
0.2	2.98	0.65	0.33	0.24	0.18				
0.3	7.36	1.56	0.65	0.39	0.29	0.24	0.20		
0.4	13.78	2.98	1.20	0.65	0.43	0.33	0.27	0.24	0.21
0.5	22.24	4.92	1.98	1.04	0.65	0.47	0.36	0.30	0.26
0.6	32.73	7.36	2.98	1.56	0.96	0.65	0.49	0.39	0.33
0.7	45.26	10.32	4.21	2.21	1.34	0.90	0.65	0.51	0.42
0.8	59.82	13.78	5.67	2.98	1.80	1.20	0.86	0.65	0.52
0.9	76.41	17.75	7.36	3.88	2.35	1.56	1.11	0.83	0.65

	C_s Values								
	Q_s/Q_c								
A_s/A_c	0.1	0.2	0.3	0.4	0.5	0.6	0.7	0.8	0.9
0.1	0.13	0.16							
0.2	0.20	0.13	0.15	0.16	0.28				
0.3	0.90	0.13	0.13	0.14	0.15	0.16	0.20		
0.4	2.88	0.20	0.14	0.13	0.14	0.15	0.15	0.16	0.34
0.5	6.25	0.37	0.17	0.14	0.13	0.14	0.14	0.15	0.15
0.6	11.88	0.90	0.20	0.13	0.14	0.13	0.14	0.14	0.15
0.7	18.62	1.71	0.33	0.18	0.16	0.14	0.13	0.15	0.14
0.8	26.88	2.88	0.50	0.20	0.15	0.14	0.13	0.13	0.14
0.9	36.45	4.46	0.90	0.30	0.19	0.16	0.15	0.14	0.13

CR3-9 Elbow, Mitered, 90 Degree, Single-Thickness Vanes (1.5 in. Vane Spacing)

$C_o = 0.11$

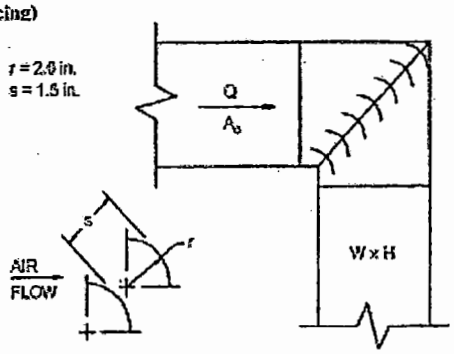

CR3-12 Elbow, Mitered, 90 Degree, Single-Thickness Vanes (3.25 in. Vane Spacing)

$C_o = 0.33$

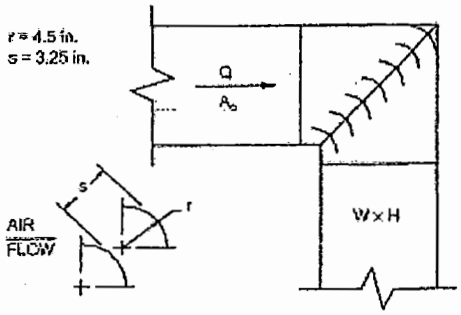

CR3-15 Elbow, Mitered, 90 Degree, Double-Thickness Vanes (2.125 in. Vane Spacing)

$C_o = 0.25$

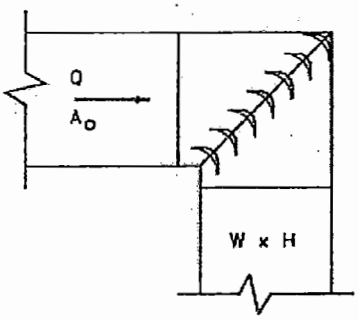

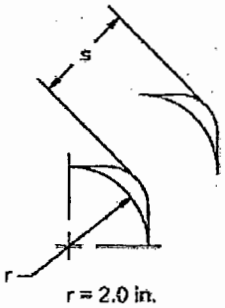

r = 2.0 in.
s = 2.125 in.

CR3-16 Elbow, Mitered, 90 Degree, Double-Thickness Vanes (3.25 in. Vane Spacing)

$C_o = 0.41$

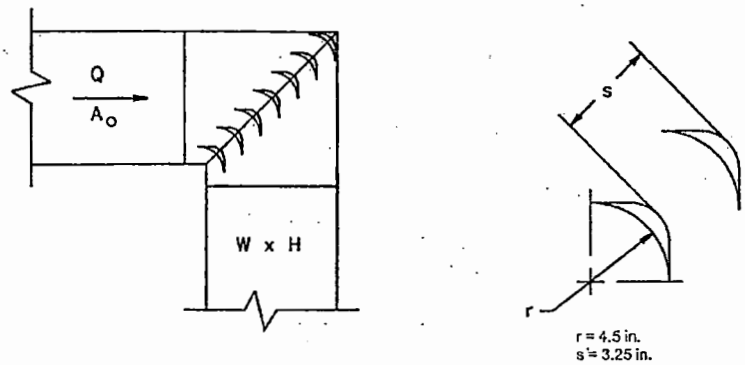

CR3-17 Elbow, Z-Shaped

	C_p Values													
	L/W													
H/W	0.0	0.4	0.6	0.8	1.0	1.2	1.4	1.6	1.8	2.0	4.0	8.0	10.0	100.0
0.25	0.00	0.68	0.99	1.77	2.89	3.97	4.41	4.60	4.64	4.60	3.39	3.03	2.70	2.53
0.50	0.00	0.66	0.96	1.72	2.81	3.86	4.29	4.47	4.52	4.47	3.30	2.94	2.62	2.46
0.75	0.00	0.64	0.94	1.67	2.74	3.75	4.17	4.35	4.39	4.35	3.20	2.86	2.55	2.39
1.00	0.00	0.62	0.90	1.61	2.63	3.61	4.01	4.18	4.22	4.18	3.08	2.75	2.45	2.30
1.50	0.00	0.59	0.86	1.53	2.50	3.43	3.81	3.97	4.01	3.97	2.93	2.61	2.33	2.19
2.00	0.00	0.56	0.81	1.45	2.37	3.25	3.61	3.76	3.80	3.76	2.77	2.48	2.21	2.07
3.00	0.00	0.51	0.75	1.34	2.18	3.00	3.33	3.47	3.50	3.47	2.56	2.28	2.03	1.91
4.00	0.00	0.48	0.70	1.26	2.05	2.82	3.13	3.26	3.29	3.26	2.40	2.15	1.91	1.79
6.00	0.00	0.45	0.65	1.16	1.89	2.60	2.89	3.01	3.04	3.01	2.22	1.98	1.76	1.66
8.00	0.00	0.43	0.63	1.13	1.84	2.53	2.81	2.93	2.95	2.93	2.16	1.93	1.72	1.61

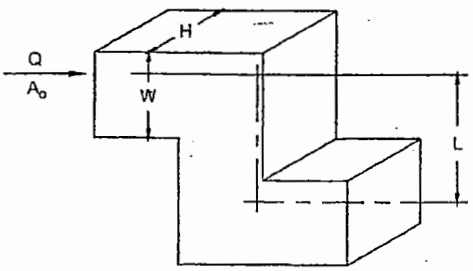

$C_o = K_r C_p$
where K_r = Reynolds number correction factor

Reynolds Number Correction Factor K_r									
Re/1000	10	20	30	40	60	80	100	140	500
K_r	1.40	1.26	1.19	1.14	1.09	1.06	1.04	1.00	1.00

CR6-1 Screen (Only)

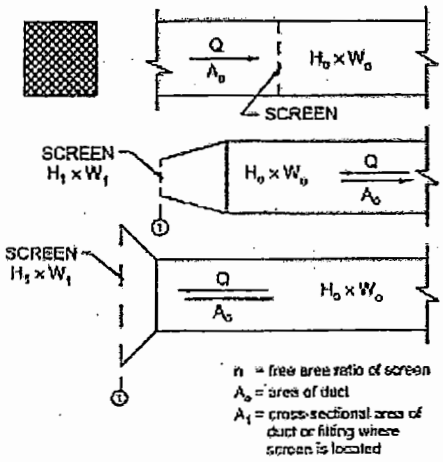

	C_o Values												
	n												
A_1/A_o	0.30	0.35	0.40	0.45	0.50	0.55	0.60	0.65	0.70	0.75	0.80	0.90	1.00
0.2	155.00	102.50	75.00	55.00	41.25	31.50	24.25	18.75	14.50	11.00	8.00	3.50	0.00
0.3	68.89	45.56	33.33	24.44	18.33	14.00	10.78	8.33	6.44	4.89	3.56	1.56	0.00
0.4	38.75	25.63	18.75	13.75	10.31	7.88	6.06	4.69	3.63	2.75	2.00	0.88	0.00
0.5	24.80	16.40	12.00	8.80	6.60	5.04	3.88	3.00	2.32	1.76	1.28	0.56	0.00
0.6	17.22	11.39	8.33	6.11	4.58	3.50	2.69	2.08	1.61	1.22	0.89	0.39	0.00
0.7	12.65	8.37	6.12	4.49	3.37	2.57	1.98	1.53	1.18	0.90	0.65	0.29	0.00
0.8	9.69	6.40	4.69	3.44	2.58	1.97	1.52	1.17	0.91	0.69	0.50	0.22	0.00
0.9	7.65	5.06	3.70	2.72	2.04	1.56	1.20	0.93	0.72	0.54	0.40	0.17	0.00
1.0	6.20	4.10	3.00	2.20	1.65	1.26	0.97	0.75	0.58	0.44	0.32	0.14	0.00
1.2	4.31	2.85	2.08	1.53	1.15	0.88	0.67	0.52	0.40	0.31	0.22	0.10	0.00
1.4	3.16	2.09	1.53	1.12	0.84	0.64	0.49	0.38	0.30	0.22	0.16	0.07	0.00
1.6	2.42	1.60	1.17	0.86	0.64	0.49	0.38	0.29	0.23	0.17	0.13	0.05	0.00
1.8	1.91	1.27	0.93	0.68	0.51	0.39	0.30	0.23	0.18	0.14	0.10	0.04	0.00
2.0	1.55	1.03	0.75	0.55	0.41	0.32	0.24	0.19	0.15	0.11	0.08	0.04	0.00
2.5	0.99	0.66	0.48	0.35	0.26	0.20	0.16	0.12	0.09	0.07	0.05	0.02	0.00
3.0	0.69	0.46	0.33	0.24	0.18	0.14	0.11	0.08	0.06	0.05	0.04	0.02	0.00
4.0	0.39	0.26	0.19	0.14	0.10	0.08	0.06	0.05	0.04	0.03	0.02	0.01	0.00
6.0	0.17	0.11	0.08	0.06	0.05	0.04	0.03	0.02	0.02	0.01	0.01	0.00	0.00

CR6-4 Obstruction, Smooth Cylinder in Rectangular Duct

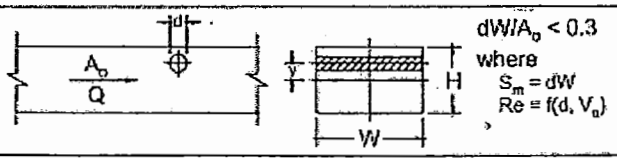

		C_o Values				
		S_m/A_o				
y/H	Re/1000	0.00	0.05	0.10	0.15	0.20
0.00	0.1	0.00	0.10	0.21	0.35	0.47
	0.5	0.00	0.08	0.17	0.28	0.38
	200	0.00	0.08	0.17	0.28	0.38
	300	0.00	0.07	0.16	0.26	0.35
	400	0.00	0.05	0.11	0.19	0.25
	500	0.00	0.04	0.09	0.14	0.19
	600	0.00	0.02	0.05	0.07	0.10
	1000	0.00	0.02	0.05	0.08	0.11
0.05	0.1	0.00	0.10	0.21	0.34	0.46
	0.5	0.00	0.08	0.17	0.27	0.37
	200	0.00	0.08	0.17	0.27	0.37
	300	0.00	0.07	0.15	0.25	0.34
	400	0.00	0.05	0.11	0.18	0.24
	500	0.00	0.04	0.08	0.13	0.18
	600	0.00	0.02	0.04	0.07	0.10
	1000	0.00	0.02	0.05	0.08	0.11
0.10	0.1	0.00	0.09	0.20	0.32	0.44
	0.5	0.00	0.07	0.16	0.26	0.35
	200	0.00	0.07	0.16	0.26	0.35
	300	0.00	0.07	0.15	0.24	0.32
	400	0.00	0.05	0.11	0.17	0.23
	500	0.00	0.04	0.08	0.13	0.18
	600	0.00	0.02	0.04	0.07	0.09
	1000	0.00	0.02	0.05	0.08	0.10
0.15	0.1	0.00	0.09	0.19	0.31	0.42
	0.5	0.00	0.07	0.15	0.25	0.34
	200	0.00	0.07	0.15	0.25	0.34
	300	0.00	0.06	0.14	0.23	0.31
	400	0.00	0.05	0.10	0.17	0.22
	500	0.00	0.04	0.08	0.12	0.17
	600	0.00	0.02	0.04	0.07	0.09
	1000	0.00	0.02	0.04	0.07	0.10
0.20	0.1	0.00	0.08	0.18	0.29	0.40
	0.5	0.00	0.07	0.14	0.24	0.32
	200	0.00	0.07	0.14	0.24	0.32
	300	0.00	0.06	0.13	0.22	0.29

		C_o Values				
		S_m/A_o				
y/H	Re/1000	0.00	0.05	0.10	0.15	0.20
	400	0.00	0.04	0.10	0.16	0.21
	500	0.00	0.03	0.07	0.12	0.16
	600	0.00	0.02	0.04	0.06	0.09
	1000	0.00	0.02	0.04	0.07	0.09
0.25	0.1	0.00	0.08	0.17	0.28	0.38
	0.5	0.00	0.06	0.14	0.22	0.30
	200	0.00	0.06	0.14	0.22	0.30
	300	0.00	0.06	0.12	0.20	0.28
	400	0.00	0.04	0.09	0.15	0.20
	500	0.00	0.03	0.07	0.11	0.15
	600	0.00	0.02	0.04	0.06	0.08
	1000	0.00	0.02	0.04	0.06	0.09
0.30	0.1	0.00	0.07	0.16	0.26	0.35
	0.5	0.00	0.06	0.13	0.21	0.28
	200	0.00	0.06	0.13	0.21	0.28
	300	0.00	0.05	0.12	0.19	0.26
	400	0.00	0.04	0.08	0.14	0.19
	500	0.00	0.03	0.06	0.10	0.14
	600	0.00	0.02	0.03	0.05	0.07
	1000	0.00	0.02	0.04	0.06	0.08
0.35	0.1	0.00	0.07	0.14	0.23	0.32
	0.5	0.00	0.05	0.11	0.19	0.25
	200	0.00	0.05	0.11	0.19	0.25
	300	0.00	0.05	0.11	0.17	0.23
	400	0.00	0.04	0.08	0.12	0.17
	500	0.00	0.03	0.06	0.09	0.13
	600	0.00	0.01	0.03	0.05	0.07
	1000	0.00	0.02	0.03	0.05	0.07
0.40	0.1	0.00	0.06	0.13	0.20	0.28
	0.5	0.00	0.05	0.10	0.16	0.22
	200	0.00	0.05	0.10	0.16	0.22
	300	0.00	0.04	0.09	0.15	0.20
	400	0.00	0.03	0.07	0.11	0.15
	500	0.00	0.02	0.05	0.08	0.11
	600	0.00	0.01	0.03	0.04	0.06
	1000	0.00	0.01	0.03	0.05	0.06

CR9-1 Damper, Butterfly

	C_o Values									
	θ									
H/W	0	10	20	30	40	50	60	65	70	90
0.12	0.04	0.30	1.10	3.00	8.00	23.00	60.00	100.00	190.00	99999
0.25	0.08	0.33	1.18	3.30	9.00	26.00	70.00	128.00	210.00	99999
1.00	0.08	0.33	1.18	3.30	9.00	26.00	70.00	128.00	210.00	99999
2.00	0.13	0.35	1.25	3.60	10.00	29.00	80.00	155.00	230.00	99999

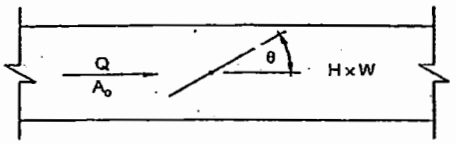

CR9-3 Damper, Parallel Blades

	C_o Values								
	θ								
L/R	0	10	20	30	40	50	60	70	80
0.3	0.52	0.79	1.49	2.20	4.95	8.73	14.15	32.11	122.06
0.4	0.52	0.84	1.56	2.25	5.03	9.00	16.00	37.73	156.58
0.5	0.52	0.88	1.62	2.35	5.11	9.52	18.88	44.79	187.85
0.6	0.52	0.92	1.66	2.45	5.20	9.77	21.75	53.78	288.89
0.8	0.52	0.96	1.69	2.55	5.30	10.03	22.80	65.46	295.22
1.0	0.52	1.00	1.76	2.66	5.40	10.53	23.84	73.23	361.00
1.5	0.52	1.08	1.83	2.78	5.44	11.21	27.56	97.41	495.31

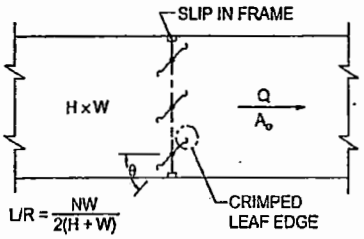

$$L/R = \frac{NW}{2(H + W)}$$

where
N = number of damper blades
W = duct dimension parallel to blade axis, in.
H = duct height, in.
L = sum of damper blade lengths, in.
R = perimeter of duct, in.

CR9-4 Damper, Opposed Blades

	C_o Values								
	θ								
L/R	0	10	20	30	40	50	60	70	80
0.3	0.52	0.79	1.91	3.77	8.55	19.46	70.12	295.21	807.23
0.4	0.52	0.85	2.07	4.61	10.42	26.73	92.90	346.25	926.34
0.5	0.52	0.93	2.25	5.44	12.29	33.99	118.91	393.36	1045.44
0.6	0.52	1.00	2.46	5.99	14.15	41.26	143.69	440.25	1163.09
0.8	0.52	1.08	2.66	6.96	18.18	56.47	193.92	520.27	1324.85
1.0	0.52	1.17	2.91	7.31	20.25	71.68	245.45	576.00	1521.00
1.5	0.52	1.38	3.16	9.51	27.56	107.41	361.00	717.05	1804.40

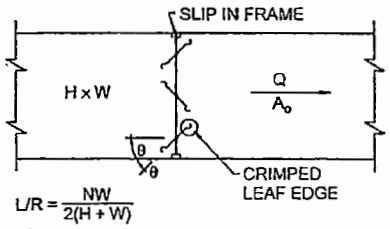

$$L/R = \frac{NW}{2(H + W)}$$

where
N = number of damper blades
W = duct dimension parallel to blade axis, in.
H = duct height, in.
L = sum of damper blade lengths, in.
R = perimeter of duct, in.

CR9-6 Fire Damper, Curtain Type, Type B

$C_o = 0.19$

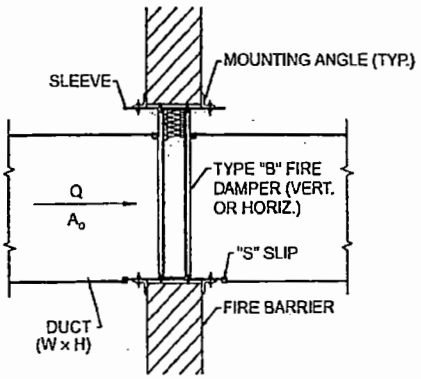

ER2-1 Bellmouth, Plenum to Round, Exhaust/Return Systems

	C_o Values												
	r/D_1												
A_o/A_1	0.00	0.01	0.02	0.03	0.04	0.05	0.06	0.08	0.10	0.12	0.16	0.20	10.00
1.5	0.22	0.20	0.15	0.14	0.12	0.10	0.09	0.07	0.05	0.04	0.03	0.01	0.01
2.0	0.13	0.11	0.08	0.08	0.07	0.06	0.05	0.04	0.03	0.02	0.02	0.01	0.01
2.5	0.08	0.07	0.05	0.05	0.04	0.04	0.03	0.02	0.02	0.01	0.01	0.00	0.00
3.0	0.06	0.05	0.04	0.03	0.03	0.02	0.02	0.02	0.01	0.01	0.01	0.00	0.00
4.0	0.03	0.03	0.02	0.02	0.02	0.01	0.01	0.01	0.01	0.01	0.00	0.00	0.00
8.0	0.01	0.01	0.01	0.00	0.00	0.00	0.00	0.00	0.00	0.00	0.00	0.00	0.00

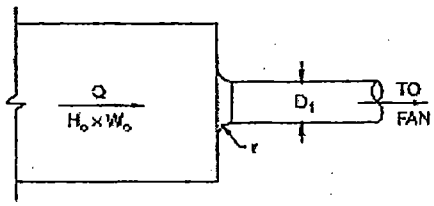

ER3-1 Elbow, 90 Degree, Variable Inlet/Outlet Areas, Exhaust/Return Systems

	C_p Values						
	W_1/W_o						
H/W_o	0.6	0.8	1.0	1.2	1.4	1.6	2.0
0.25	1.76	1.43	1.24	1.14	1.09	1.06	1.06
1.00	1.70	1.36	1.15	1.02	0.95	0.90	0.84
4.00	1.46	1.10	0.90	0.81	0.76	0.72	0.66
100.00	1.50	1.04	0.79	0.69	0.63	0.60	0.55

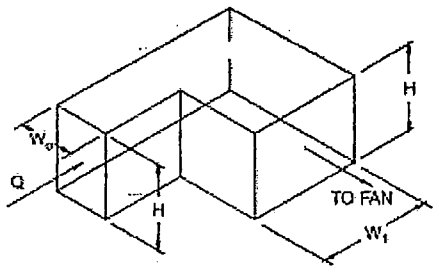

ER4-1 Transition, Rectangular, Two Sides Parallel, Symmetrical, Exhaust/Return Systems

	C_p Values									
	θ									
A_o/A_1	10	15	20	30	45	60	90	120	150	180
0.05	0.26	0.27	0.40	0.56	0.71	0.86	1.00	0.99	0.98	0.98
0.10	0.24	0.26	0.36	0.53	0.69	0.82	0.93	0.93	0.92	0.91
0.25	0.17	0.19	0.22	0.42	0.60	0.68	0.70	0.69	0.67	0.66
0.50	0.14	0.13	0.15	0.24	0.35	0.37	0.38	0.37	0.36	0.35
1.00	0.00	0.00	0.00	0.00	0.00	0.00	0.00	0.00	0.00	0.00
2.00	0.23	0.20	0.20	0.20	0.24	0.28	0.54	0.78	1.02	1.09
4.00	0.81	0.64	0.64	0.64	0.88	1.12	2.78	4.38	5.65	6.60
6.00	1.82	1.44	1.44	1.44	1.98	2.53	6.56	10.20	13.00	15.20
10.00	5.03	5.00	5.00	5.00	6.50	8.02	19.10	29.10	37.10	43.10

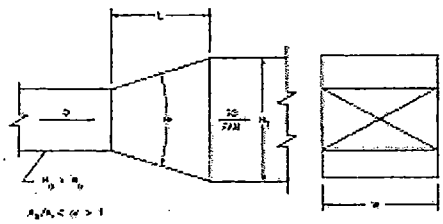

ER4-3 Transition, Rectangular to Round, Exhaust/Return Systems

	C_p Values									
	θ									
A_o/A_1	10	15	20	30	45	60	90	120	150	180
0.06	0.30	0.54	0.53	0.65	0.77	0.88	0.95	0.98	0.98	0.93
0.10	0.30	0.50	0.53	0.64	0.75	0.84	0.89	0.91	0.91	0.88
0.25	0.25	0.36	0.45	0.52	0.58	0.62	0.64	0.64	0.64	0.64
0.50	0.15	0.21	0.25	0.30	0.33	0.33	0.33	0.32	0.31	0.30
1.00	0.00	0.00	0.00	0.00	0.00	0.00	0.00	0.00	0.00	0.00
2.00	0.24	0.28	0.26	0.20	0.22	0.24	0.49	0.73	0.97	1.04
4.00	0.89	0.78	0.79	0.70	0.88	1.12	2.72	4.33	5.62	6.58
6.00	1.89	1.67	1.59	1.49	1.98	2.52	6.51	10.14	13.05	15.14
10.00	5.09	5.32	5.15	5.05	6.50	8.05	19.06	29.07	37.08	43.05

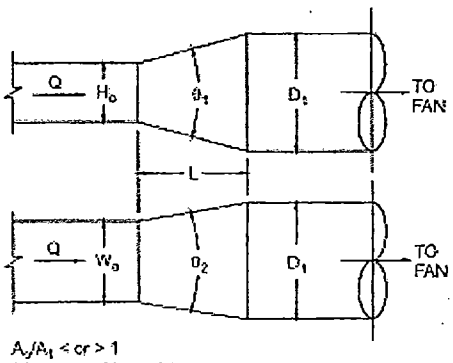

A_o/A_1 < or > 1
θ is larger of θ_1 and θ_2

SR2-3 Plain Diffuser (Two Sides Parallel), Free Discharge

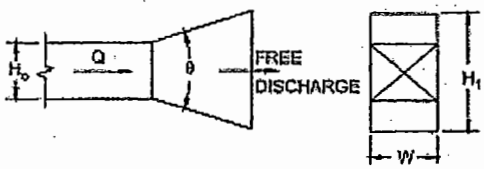

		C_o Values								
		θ								
A_1/A_o	Re/1000	8	10	14	20	30	45	60	90	120
1	50	0.00	0.00	0.00	0.00	0.00	0.00	0.00	0.00	0.00
	100	0.00	0.00	0.00	0.00	0.00	0.00	0.00	0.00	0.00
	200	0.00	0.00	0.00	0.00	0.00	0.00	0.00	0.00	0.00
	400	0.00	0.00	0.00	0.00	0.00	0.00	0.00	0.00	0.00
	2000	0.00	0.00	0.00	0.00	0.00	0.00	0.00	0.00	0.00
2	50	0.50	0.51	0.56	0.63	0.80	0.96	1.04	1.09	1.09
	100	0.48	0.50	0.56	0.63	0.80	0.96	1.04	1.09	1.09
	200	0.44	0.47	0.53	0.63	0.74	0.93	1.02	1.08	1.08
	400	0.40	0.42	0.50	0.62	0.74	0.93	1.02	1.08	1.08
	2000	0.40	0.42	0.50	0.62	0.74	0.93	1.02	1.08	1.08
4	50	0.34	0.38	0.48	0.63	0.76	0.91	1.03	1.07	1.07
	100	0.31	0.36	0.45	0.59	0.72	0.88	1.02	1.07	1.07
	200	0.26	0.31	0.41	0.53	0.67	0.83	0.96	1.06	1.06
	400	0.22	0.27	0.39	0.53	0.67	0.83	0.96	1.06	1.06
	2000	0.22	0.27	0.39	0.53	0.67	0.83	0.96	1.06	1.06
6	50	0.32	0.34	0.41	0.56	0.70	0.84	0.96	1.08	1.08
	100	0.27	0.30	0.41	0.56	0.70	0.84	0.96	1.08	1.08
	200	0.24	0.27	0.36	0.52	0.67	0.81	0.94	1.06	1.06
	400	0.20	0.24	0.36	0.52	0.67	0.81	0.94	1.06	1.06
	2000	0.18	0.24	0.34	0.50	0.67	0.81	0.94	1.05	1.05

SR2-5 Pyramidal Diffuser, Free Discharge

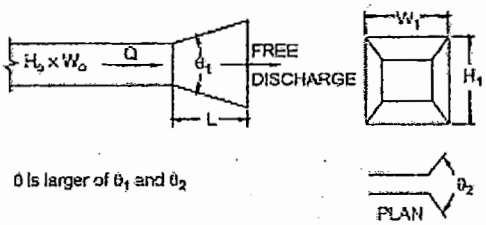

		C_o Values								
		θ								
A_1/A_o	Re/1000	8	10	14	20	30	45	60	90	120
1	50	0.00	0.00	0.00	0.00	0.00	0.00	0.00	0.00	0.00
	100	0.00	0.00	0.00	0.00	0.00	0.00	0.00	0.00	0.00
	200	0.00	0.00	0.00	0.00	0.00	0.00	0.00	0.00	0.00
	400	0.00	0.00	0.00	0.00	0.00	0.00	0.00	0.00	0.00
	2000	0.00	0.00	0.00	0.00	0.00	0.00	0.00	0.00	0.00
2	50	0.65	0.68	0.74	0.82	0.92	1.05	1.10	1.08	1.08
	100	0.61	0.66	0.73	0.81	0.90	1.04	1.09	1.08	1.08
	200	0.57	0.61	0.70	0.79	0.89	1.04	1.09	1.08	1.08
	400	0.50	0.56	0.64	0.76	0.88	1.02	1.07	1.08	1.08
	2000	0.50	0.56	0.64	0.76	0.88	1.02	1.07	1.08	1.08
4	50	0.53	0.60	0.69	0.78	0.90	1.02	1.07	1.09	1.09
	100	0.49	0.55	0.66	0.78	0.90	1.02	1.07	1.09	1.09
	200	0.42	0.50	0.62	0.74	0.87	1.00	1.06	1.08	1.08
	400	0.36	0.44	0.56	0.70	0.84	0.99	1.06	1.08	1.08
	2000	0.36	0.44	0.56	0.70	0.84	0.99	1.06	1.08	1.08
6	50	0.50	0.57	0.66	0.77	0.91	1.02	1.07	1.08	1.08
	100	0.47	0.54	0.63	0.76	0.98	1.02	1.07	1.08	1.08
	200	0.42	0.48	0.60	0.73	0.88	1.00	1.06	1.08	1.08
	400	0.34	0.44	0.56	0.73	0.86	0.98	1.06	1.08	1.08
	2000	0.34	0.44	0.56	0.73	0.86	0.98	1.06	1.08	1.08
10	50	0.45	0.53	0.64	0.74	0.85	0.97	1.10	1.12	1.12
	100	0.40	0.48	0.62	0.73	0.85	0.97	1.10	1.12	1.12
	200	0.34	0.44	0.56	0.69	0.82	0.95	1.10	1.11	1.11
	400	0.28	0.40	0.55	0.67	0.80	0.93	1.09	1.11	1.11
	2000	0.28	0.40	0.55	0.67	0.80	0.93	1.09	1.11	1.11

SR2-6 Pyramidal Diffuser, with Wall

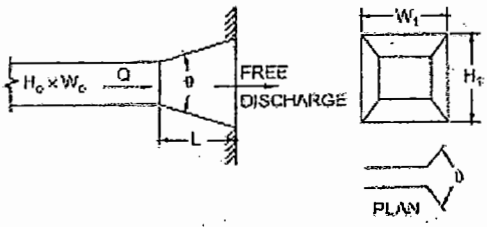

L/D_E	0.5	1.0	2.0	3.0	4.0	5.0	6.0	8.0	10.0	12.0	14.0
C_o	0.49	0.40	0.30	0.26	0.23	0.21	0.19	0.17	0.16	0.15	0.14
θ	26	19	13	11	9	8	7	6	6	5	5

θ is the optimum angle.

SR3-1 Elbow, 90 Degree, Variable Inlet/Outlet Areas, Supply Air Systems

	C_o Values						
	W_o/W_1						
H/W_1	0.6	0.8	1.0	1.2	1.4	1.6	2.0
0.25	0.63	0.92	1.24	1.64	2.14	2.71	4.24
1.00	0.61	0.87	1.15	1.47	1.86	2.30	3.36
4.00	0.53	0.70	0.90	1.17	1.49	1.84	2.64
100.00	0.54	0.67	0.79	0.99	1.23	1.54	2.20

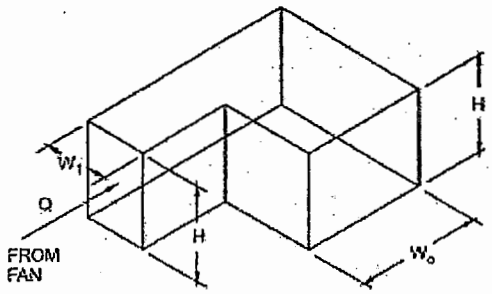

SR4-1 Transition, Rectangular, Two Sides Parallel, Symmetrical, Supply Air Systems

	C_o Values									
	θ									
A_o/A_1	10	15	20	30	45	60	90	120	150	180
0.10	0.05	0.05	0.05	0.05	0.07	0.08	0.19	0.29	0.37	0.43
0.17	0.05	0.04	0.04	0.04	0.05	0.07	0.18	0.28	0.36	0.42
0.25	0.05	0.04	0.04	0.04	0.06	0.07	0.17	0.27	0.35	0.41
0.50	0.06	0.05	0.05	0.05	0.06	0.07	0.14	0.20	0.26	0.27
1.00	0.00	0.00	0.00	0.00	0.00	0.00	0.00	0.00	0.00	1.00
2.00	0.56	0.52	0.60	0.96	1.40	1.48	1.52	1.48	1.44	1.40
4.00	2.72	3.04	3.52	6.72	9.60	10.38	11.20	11.04	10.72	10.56
10.00	24.00	26.00	36.00	53.00	69.00	82.00	93.00	93.00	92.00	91.00
16.00	66.56	69.12	102.40	143.36	181.76	220.16	256.00	253.44	250.88	250.88

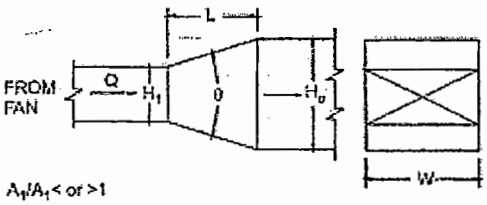

SR4-3 Transition, Round to Rectangular, Supply Air Systems

	C_o Values									
	θ									
A_o/A_1	10	15	20	30	45	60	90	120	150	180
0.10	0.05	0.05	0.05	0.05	0.07	0.08	0.19	0.29	0.37	0.43
0.17	0.05	0.05	0.05	0.04	0.06	0.07	0.18	0.28	0.36	0.42
0.25	0.06	0.05	0.05	0.04	0.06	0.07	0.17	0.27	0.35	0.41
0.50	0.06	0.07	0.07	0.05	0.06	0.06	0.12	0.18	0.24	0.26
1.00	0.00	0.00	0.00	0.00	0.00	0.00	0.00	0.00	0.00	0.00
2.00	0.60	0.84	1.00	1.20	1.32	1.32	1.32	1.28	1.24	1.20
4.00	4.00	5.76	7.20	8.32	9.28	9.92	10.24	10.24	10.24	10.24
10.00	30.00	50.00	53.00	64.00	75.00	84.00	89.00	91.00	91.00	88.00
16.00	76.80	138.24	135.68	166.40	197.12	225.28	243.20	250.88	250.88	238.08

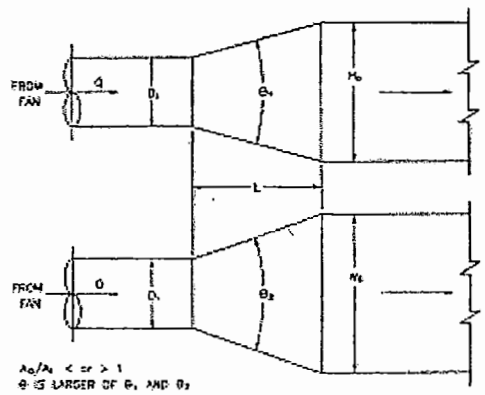

SR5-1 Smooth Wye of Type $A_s + A_b \geq A_c$, Branch 90° to Main, Diverging

		C_b Values								
		Q_b/Q_c								
A_s/A_c	A_b/A_c	0.1	0.2	0.3	0.4	0.5	0.6	0.7	0.8	0.9
0.50	0.25	3.44	0.70	0.30	0.20	0.17	0.16	0.16	0.17	0.18
	0.50	11.00	2.37	1.06	0.64	0.52	0.47	0.47	0.47	0.48
	1.00	60.00	13.00	4.78	2.06	0.96	0.47	0.31	0.27	0.26
0.75	0.25	2.19	0.55	0.35	0.31	0.33	0.35	0.36	0.37	0.39
	0.50	13.00	2.50	0.89	0.47	0.34	0.31	0.32	0.36	0.43
	1.00	70.00	15.00	5.67	2.62	1.36	0.78	0.53	0.41	0.36
1.00	0.25	3.44	0.78	0.42	0.33	0.30	0.31	0.40	0.42	0.46
	0.50	15.50	3.00	1.11	0.62	0.48	0.42	0.40	0.42	0.46
	1.00	67.00	13.75	5.11	2.31	1.28	0.81	0.59	0.47	0.46

		C_s Values								
		Q_s/Q_c								
A_s/A_c	A_b/A_c	0.1	0.2	0.3	0.4	0.5	0.6	0.7	0.8	0.9
0.50	0.25	8.75	1.62	0.50	0.17	0.05	0.00	−0.02	−0.02	0.00
	0.50	7.50	1.12	0.25	0.06	0.05	0.09	0.14	0.19	0.22
	1.00	5.00	0.62	0.17	0.08	0.08	0.09	0.12	0.15	0.19
0.75	0.25	19.13	3.38	1.00	0.28	0.05	−0.02	−0.02	0.00	0.06
	0.50	20.81	3.23	0.75	0.14	−0.02	−0.05	−0.05	−0.02	0.03
	1.00	16.88	2.81	0.63	0.11	−0.02	−0.05	0.01	0.00	0.07
1.00	0.25	46.00	9.50	3.22	1.31	0.52	0.14	−0.02	−0.05	−0.01
	0.50	35.00	6.75	2.11	0.75	0.24	0.00	−0.10	−0.09	−0.04
	1.00	38.00	7.50	2.44	0.81	0.24	−0.03	−0.08	−0.06	−0.02

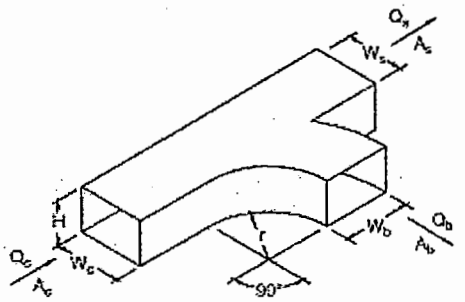

$nW_s = 1.0$
$A_s = A_b \geq A_c$

SR5-3 Wye of the Type $A_s + A_b > A_c$, $A_s = A_c$, 45 Degree, Diverging

	C_b Values								
	Q_b/Q_c								
A_b/A_c	0.1	0.2	0.3	0.4	0.5	0.6	0.7	0.8	0.9
0.1	0.60	0.52	0.57	0.58	0.64	0.67	0.70	0.71	0.73
0.2	2.24	0.56	0.44	0.45	0.51	0.54	0.58	0.60	0.62
0.3	5.94	1.08	0.52	0.41	0.44	0.46	0.49	0.52	0.54
0.4	10.56	1.88	0.71	0.43	0.35	0.31	0.31	0.32	0.34
0.5	17.75	3.25	1.14	0.59	0.40	0.31	0.30	0.30	0.31
0.6	26.64	5.04	1.76	0.83	0.50	0.36	0.32	0.30	0.30
0.7	37.73	7.23	2.56	1.16	0.67	0.44	0.35	0.31	0.30
0.8	49.92	9.92	3.48	1.60	0.87	0.55	0.42	0.35	0.32

Q_s/Q_c	0.1	0.2	0.3	0.4	0.5	0.6	0.8	1.0
C_s	32.00	6.50	2.22	0.87	0.40	0.17	0.03	0.00

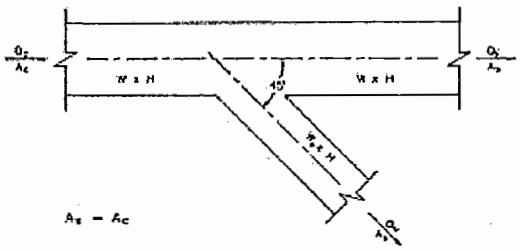

$A_s = A_c$

SR5-5 Tee of the Type $A_s + A_b > A_c$, $A_s = A_c$ Diverging

	C_b Values								
	Q_b/Q_c								
A_b/A_c	0.1	0.2	0.3	0.4	0.5	0.6	0.7	0.8	0.9
0.1	2.06	1.20	0.99	0.87	0.88	0.87	0.87	0.86	0.86
0.2	5.16	1.92	1.28	1.03	0.99	0.94	0.92	0.90	0.89
0.3	10.26	3.13	1.78	1.28	1.16	1.06	1.01	0.97	0.94
0.4	15.84	4.36	2.24	1.48	1.11	0.88	0.80	0.75	0.72
0.5	24.25	6.31	3.03	1.89	1.35	1.03	0.91	0.84	0.78
0.6	34.56	8.73	4.04	2.41	1.64	1.22	1.04	0.94	0.87
0.7	46.55	11.51	5.17	3.00	2.00	1.44	1.20	1.06	0.96
0.8	60.80	14.72	6.54	3.72	2.41	1.69	1.38	1.20	1.07

Q_s/Q_c	0.1	0.2	0.3	0.4	0.5	0.6	0.8	1.0
C_s	32.00	6.50	2.22	0.87	0.40	0.17	0.03	0.00

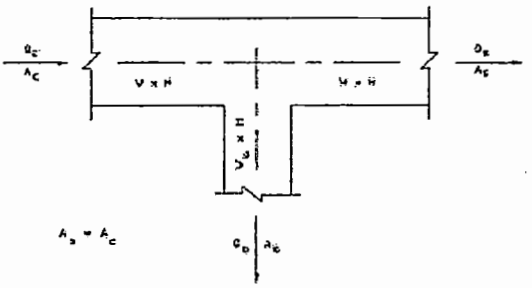

This page intentionally left blank.

DMJM technology

CALCULATION DESIGN VERIFICATION CHECKLIST

Task/Project #: Demonstration Bulk Vitrification System A77977

Calculation Number:	Revision	Safety Related?
145579-D-CA-061	0	Y-SS

Reviewer/Checker (print name): K. J. McCracken
Reviewer performed or supervised subject calculation.
__X__NO ____YES Justification Attachment __-_____, _____ pages
Alternate Verification method approved _N/A_____ Method _Calculation Independently Checked_

Date 03/27/06

ITEM (S) CHECKED	ACCEPT Y/N	OBJECTIVE EVIDENCE SHEETS	INITIAL/DATE
1. Cover forms properly completed.	Y	Pg 1-19	3/28/06
2. Calculation Sheet headers complete with calc. no., rev., etc.	Y	Pg 1-19	3/28/06
3. Calculation Sheet contents complete per format.	Y	Pg 1-19	3/28/06
4. Listed attachments included.	Y	Pg 1	3/28/06
5. Calculation Objective clearly described.	Y	Pg 3 Section 1.1 and 1.2	3/28/06
6. Criteria are suitable and properly referenced to task-specific documents.	N/A	Calculation determines head loss and thermal effects—no criteria necessary	3/28/06
7. Assumptions and data described and attached or referenced to task documents.	Y	Pg 7 Section 2.2 and Attachments 4 & 5	3/28/06
8. Calculation method identified and appropriate for the design activity.	Y	Pg 11 Section 4.0	3/28/06
9. Calculation results reasonable and correctly described in Results & Conclusions.	Y	Pg 13-18 Section 5.0	3/28/06
10. Computer Program identified with version and revision.	Y	Pg 11 Section 4.0 last Paragraph	3/28/06
11. Computer Program references method used, etc.	Y	Pg 11 Section 4.0 1st Paragraph	3/28/06
12. Computer input/output provided.	Y	Attachment 2	3/28/06
13. Computer runs traceable to calculation.	Y	Section 6.0	3/28/06
14. Computer input data within permissible design input range.	Y	Attachment 2	3/28/06
15. Computer Program validation/verification addressed.	Y	Pg 13 Section 4.0 last Paragraph	3/28/06

REMARKS
None

K. J. McCracken _____ Date 3/28/06
Reviewer/Checker Print Name & Signature

J. J. Irwin _____ Date 3/28/06
Originator Print Name & Signature

EP 3.9-4F October 2003

CH2M HILL SPREADSHEET VERIFICATION AND RELEASE FORM

1. SVF 1130 Rev. 0

1a. No. Pages: 2

2. **Spreadsheet Owner, Organization, MSIN, & Phone No.:** John J. Irwin, 375-7866

3. **Spreadsheet File Name and Version No.:** M:\Demonstration Bulk VIT\Fiscal Year 2006 Work\Calculations\OGTS Thermal-Hydraulics Analysis\Rev 0 Report\Attachment 3 Input Data\Complete OGTS Flow Data with Fan for tables in calc.xls

4. **Function and Purpose of Spreadsheet:** Calculate Thermal Hydraulic K-Losses and Heat Transfer Coeffiecents for DBVS Main OGTS System

5. **Spreadsheet Category:** ☐ Critical Spreadsheet ☑ Non-Critical Spreadsheet ☐ Multiple-Use Spreadsheet

6. **Associated Document(s):** Calculation 145579-D-CA-061 | 6a. **Attachments:** NA

7. **Scope of Verification:** ☑ Input Data ☑ Formulas ☐ Changes Only ☐ Macros/Add-ins ☐ Other

8. **Scope Description:** Scope of verification was limited to 10% of the input fields to the calculation and the External Convection and Thermal Radiation Coefficents

9. **Verification Checklist:**

	Yes	No	NA
a. All unique formulas in spreadsheet have been checked that they correctly perform their intended function.	☑	☐	☐
b. Non-unique formulas have been reviewed to confirm that they have been correctly copied.	☑	☐	☐
c. All values are correctly labeled with units.	☑	☐	☐
d. Formulas were checked for dimensional consistency.	☑	☐	☐
e. Spreadsheet contains no hidden pages or formulas/data on hidden ranges/pages have been verified.	☑	☐	☐
f. Links to external workbooks have been verified.	☐	☐	☑
g. Input data used in the spreadsheet are appropriate and have been checked against their original source.	☑	☐	☐
h. Spreadsheet has been reviewed for common errors. See TFC-ENG-DESIGN-C-32, Attachment C for guidance.	☑	☐	☐
i. Assumptions in the spreadsheet are reasonable and supportable.	☑	☐	☐
j. Macros contained in the spreadsheet have been verified for correct operation.	☐	☐	☑
k. Add-in software is commercially available software, suitable for its intended purpose, and is a production version of the software (e.g. not be a "beta" or test version).	☐	☐	☑
l. Spreadsheet contains a documentation sheet with spreadsheet purpose, methodology, assumptions, and reference to current SVF No.	☑	☐	☐
m. A change log is included for multiple-use or revised single-use spreadsheets and all changes in the log have been verified.	☐	☐	☑
n. If the spreadsheet is a critical spreadsheet, a published spreadsheet description document has been produced that provides a description of the spreadsheet purpose, assumptions, methodology.	☐	☐	☑
o. Spreadsheet has been protected against inadvertent change per TFC-ENG-DESIGN-C-32, Section 4.6.3.	☑	☐	☐
p. All errors identified during verification have been corrected and the spreadsheet is suitable for its intended purpose.	☑	☐	☐

10. **Comments:** (Explanation for any items marked "No" must be provided)

See attached pages for verifcation evidence (28 pages attached)

11. Approvals/Clearance:	Printed Name:	Signature:	Date:	Release Stamp
Spreadsheet Owner:	John J. Irwin	J. J. Irwin	3/28/06	
Spreadsheet Verifier:	Ron Orme FOR	[illegible]	3/28/06	
Owner's Manager:	Ja-Kael Luey	Ja-Kael Luey	3/28/06	
LCCB Approval (if required):				
Clearance Review:				

When completed, submit the original hard copy signed SVF form together with a protected electronic copy of the spreadsheet (in *.xls or *.xlt format) to the Document Control Service Center for records retention and release. See Form Instructions for how to transmit spreadsheet electronic file.

A-6003-781 (01/06)

CH2M HILL SPREADSHEET VERIFICATION AND RELEASE FORM	1. SVF 1130 Rev. 0
	1a. No. Pages: 2

Cleared for Public Release? ☐Yes ☐No	Restricted Use? ☐Yes ☐No	Restriction Type:

When completed, submit the original hard copy signed SVF form together with a protected electronic copy of the spreadsheet (in *.xls or *.xlt format) to the Document Control Service Center for records retention and release. See Form Instructions for how to transmit spreadsheet electronic file.

SPREADSHEETS VERIFIED
BY RON ORME & KURT McCRACKEN
3/22 - 3/28/08

	A	B	C	D	E	F
1		AWTE HEPA filter, 34-N02-026, Stream No. 9A	80 acfm at -2.24" w.g. and 77 °F, 350 lb/hr (TBR)			
2		Component	Details	Size	Schedule	Inside Dia.
3				(in)		(in)
4	J50	Atmospheric Junction				
5	P50	Inlet Housing and screen	16" square Intake with birdscreen (60% open), S.Stl	16 x 16		=(1.3*(16*16)^0.625)/(16+16
6	"	Sudden Contraction	16" square x 4" Dia	16 x 4	40S	4.026
7	"	Inlet Piping, 4-AA-34-0213	4" straight duct, S.Stl 6'8" - 6"(elbow)	4	40S	4.026
8	"	Elbow	90° Elbow, R/D = 1.5, S.Stl	4	40S	4.026
9	"	Inlet Piping, 4-AA-34-0213	4" straight duct, S.Stl 6'3" - 6"(elbow) - 12"(filter)	4	40S	4.026
10	P50	Inlet Transition	Flanders, Sudden Expansion, 4 x 12, 180°			4.26/12.0 SQ
11						Total:
12						
13						
14	J51	HEPA Filter, 34-N02-026 Pre	Flanders, dP @ 0.12" w.c. (0.24" Dirty) at 250 acfm	12 x 12 x 2" Lg		
15	J51	HEPA Filter, 34-N02-026	Flanders, dP @ 1.3" w.c. (2.6" Dirty) at 250 acfm, P-007-W-42-N2-NU-51-21-CC-FU5, 4" RF Flange Interface	12 x 12 x 12" Lg		4
16			Total Pressure drop at 250 cfm	1.42	clean	Total:
17				2.84	dirty	
18						
19	P51	Outlet Transition	Flanders, Sudden Contraction, 12 x 4, 180°			12.0 SQ/4.26 Rnd
20	"	Outlet Piping, 4-AA-34-0213	4" straight duct, S.Stl 2'6.25" - 6"(elbow) - 12"(filter)	4	40S	4.026
21	"	Elbow	90° Elbow, R/D = 1.5, S.Stl	4	40S	4.026
22	P51	Outlet Piping, 4-AA-34-0213	4" straight duct, S.Stl 2" 3.625" - 6"(elbow)	4	40S	4.026
23						Total:
24						
25						
26	J52	Iso Valve, HV-111	4" Keystone	4		3.875
27	P52	Outlet Piping, 4-AA-34-0213	4" straight duct, S.Stl 12+ 8.5	4	40S	4.026
28	P52	Expansion Joint, EJ-406	DME 4" 26.625	4	40S	4.025
29	J53	AWTE CP	AWTE K = 1.5 (Inlet and Exit)			Total:
30						
31		ICV Box plenum HEPA filter, 35-N02-010, Stream No. 9	406 acfm at -2.24" w.g. and 77 °F			
32		Component	Details	Size	Schedule	Inside Dia.

F-145579-36-V-0003 Rev I

Complete OGTS Flow Data with Fan for tables in calc - checkers copy -- In Filters

	G	H	I	J	K
1					
2	L		ASHRAE Fitting No	ASHRAE Loss Coef.	Cv
3	(in)				
4					
5			CR6-1/ER3-1	=0.97+1.15	
6			ED1-1	0.5	
7	=6*12+8-6		CD11-1	ARROW	
8			CD3-1	0.2	
9	=6*12+3-6-12		CD11-1	ARROW	
10			ED4-2	0.34 ? 0.9 ASHRAE DATABASE & ASHRAE FUNDAMENTALS DISAGREEMENT	
11	=+SUM(G5:G10)		Total:	=+SUM(J5:J10)	Total:
12	=+G11/12		ft		
13					
14	2				
15	11				
16	=+SUM(G14:G15)		Total:	=+SUM(J14:J15)	Total:
17	=+G16/12		ft		
18					
19			ED1-1	0.5	
20	=2*12+6.25-6-12		CD11-1	ARROW	
21			CD3-1	0.2	
22	=2*12+3.625-6		CD11-1	ARROW	
23	=+SUM(G19:G22)		Total:	=+SUM(J19:J22)	Total:
24	=+G23/12		ft		
25					
26			ARROW	ARROW 425	
27	=12+8.5		CD11-1	ARROW	
28	26.625		CR6-3	0.32	
29	=+SUM(G26:G28)		Total:	=+SUM(J26:J28)	Total:
30	=+G29/12		ft		
31					
32	L		ASHRAE Fitting No	ASHRAE Loss Coef.	Cv

ASHRAE

CR6-1 p35.55 $\eta = 0.60$ $A_1/A_2 = 1$ $K = 0.97$

ER3-1 p35.57 $W_1/W_2 = 1$ $H/W_2 = 1$ $K = 1.15$

ED1-1 p35.30 $L/D = 0$ $K = 0.5$

CD3-1 p35.27 $D = 4$ $K = 0.21$

ED4-2 p35.31 $\frac{A_0}{A_1} = \frac{\frac{\pi}{4} 4.026^2}{12^2} = 0.0884$ $K = 0.9$

ED1-1 $L/D = 0$ $K = 0.5$

CR6-3 Can't check in Fundamentals

	A	B	C	D	E	F
33				(in)		(in)
34	J1	B Atmospheric Junction				
35	P1	Inlet Housing and screen	16" square Intake with birdscreen, (60% open) S.Stl	16 x 16		=(1.3*(16*16)^0.625)/(16+16
36	"	Inlet Piping, 6-AA-35-0218	6" straight duct, S.Stl	6	40S	6.065
37	P1	N02-010 Inlet Transition	Flanders, Sudden Expansion, 6 dia x 12 dia, 180°	6	40S	6.065/12.0 SQ
38						Total:
39						
40						
41	J2	HEPA Filter, 35-N02-010 Pre	Flanders, 0.12" w.c. (0.24" Dirty) at 500 cfm			
42	J2	HEPA Filter, 35-N02-010	Flanders, 1.0" w.c. (2.0" Dirty) at 500 cfm, P-007-W-43-N2-NU-51-23-GG-DU5	24 x 24 x 16		12
43			Total Pressure drop at 500 cfm	1.12	clean	Total:
44				2.24	dirty	
45						
46	P2	Outlet Transition	Flanders, Sudden Contraction, 24 x 6			12.0 SQ/6.065 Rnd
47	"	Piping, 6-AA-35-0218	6" straight duct, S.Stl	6	40S	6.065
48	"	Elbow No. 1	90° Elbow, R/D = 1.5, S.Stl	6	40S	6.065
49	"	Piping, 6-AA-35-0218	6" straight duct, S.Stl	6	40S	6.065
50	"	Elbow No. 2	45° Elbow, R/D = 1.5, S.Stl	6	40S	6.065
51						Total:
52						
53						
54	J3	Reducer	6" x 4", 22°	6 x 4	40S	6.065/4.026"
55	P3	Piping, 4-AA-35-0218	4" straight duct, S.Stl	4	40S	4.026
56	"	Flowmeter	3 ea Size 1 Annubar flowmeter	4		4.026
57						Total:
58						
59						
60	J4	Reducer	6" x 4", 22°	4 x 6	40S	4.026/6.065"
61	P4	Elbow No. 3	45° Elbow, R/D = 1.5, S.Stl	6	40S	6.065
62	"	Piping, 6-AA-35-0218	6" straight duct, S.Stl	6	40S	6.065
63	"	Elbow No. 4	90° Elbow, R/D = 1.5, S.Stl	6	40S	6.065
64	"	Piping, 6-AA-35-0218	6" straight duct, S.Stl	6	40S	6.065
65	"	Elbow No. 5	90° Elbow, R/D = 1.5, S.Stl	6	40S	6.065
66	P4	Piping, 6-AA-35-0218	6" straight duct, S.Stl	6	40S	6.065
67						Total
68						

	G	H	I	J	K
33	(in)				
34					
35			CR6-1/ER3-1	=0.97+1.15	
36	64		CD11-1	ARROW	
37	0		ED4-2	0.81	
38	=+SUM(G35:G37)		Total:	=+SUM(J35:J37)	Total:
39	=+G38/12		ft		
40					
41	2				
42	5.875				
43	=+SUM(G41:G42)		Total:	=+SUM(J41:J42)	Total:
44	=+G43/12		ft		
45					
46			ED1-1	0.5	
47	42		CD11-1	ARROW	
48			CD3-1	0.13	
49	62		CD11-1	ARROW	
50			CD3-3	0.08	
51	=+SUM(G46:G50)		Total:	=+SUM(J46:J50)	Total:
52	=+G51/12		ft		
53					
54	5.5		ED4-1	0.22	
55	163		CD11-1	ARROW	
56			Vendor	1.635	
57	=+SUM(G52:G56)		Total:	=+SUM(J52:J56)	Total:
58	=+G57/12		ft		
59					
60	5.5		ED4-1	0.25	
61			CD3-3	0.08	
62	12		CD11-1	ARROW	
63			CD3-3	0.08	
64	12		CD11-1	ARROW	
65			CD3-3	0.08	
66	38		CD11-1	ARROW	
67	=+SUM(G61:G66)		Total:	=+SUM(J61:J66)	Total:
68	=+G67/12		ft		

F-145579-36-U-0003 Rev 1

	A	B	C	D	E	F
69						
70	J5	Reducer	6" x 4", 22°	6 x 4	40S	6.065/4.026"
71	P5	Expansion Joint, EJ-501	DME 4" 26.625"	4		4.025
72	J6	ICV Box CP	ICV Box K = 1.5 (Inlet and exit)			Total:
73						
74						
75		Tempering Air Vent at Sintered Metal Filter Inlet, Stream No. 14	165 acfm at -2.46" w.g. 77 °F, 725 lb/hr			
76		Component	Details	Size	Schedule	Inside Dia.
77				(in)		(in)
78	J60 C	Atmospheric Junction				
79	P60	Inlet Housing and screen	16" square Intake with birdscreen, (60% open) S.Stl	16 x 16		=(1.3*(16*16)^0.625)/(16+16
80	"	Inlet Piping, 8-AA-36-0322	8" straight duct, S.Stl 8'4"	8	10S	8.329
81	"	Reducer	8 x 12 Reducer, 28.5° 20"	8 x 12	10S	8.329/12.39"
82	P60	Inlet Transition	Sudden Expansion	12	10S	12" Rnd/24.0 SQ
83						Total:
84						
85						
86	J61	HEPA Filter, 36-N02-049, Pre	Flanders, dP @ 0.12" w.c. (0.24" Dirty) at 1000 acfm			
87	J61	HEPA Filter, 36-N02-049	Flanders, dp @ 1.0" w.c. (2.0" Dirty) at 1000 acfm, P-007-W-42-N2-NU-51-21-GG-FU5, 12" RF Flange Interface	24 x 24 x 30		12
88		Note: Filter is depicted as 12"sq x 30" lg	Total Pressure drop at 1000 cfm	1.12	clean	Total:
89				2.24	dirty	
90						
91	P61	Outlet Transition	Sudden Contraction			24.0 SQ/ 12 Rnd
92	"	Reducer	12 x 6 Reducer, 41.32° 30"	12 x 6	40S	12.39/6.065
93	"	Outlet Piping, 6-AA-36-0322	6" straight duct, S.Stl 3'6"	6	40S	6.065
94	P61	60° Wye	60° Wye, one branch closed	6	40S	6.065
95						Total:
96						
97		at 165 acfm and -2.46" w.g. 77 °F, 725 lb/hr, Cv ~ 155				
98	J62	Isolation Valve, TV-014	6" Keystone	6		=13/16+5
99	P62	60° Wye	60° Wye, one branch closed	6	40S	6.065
100	"	Outlet Piping, 6-AA-36-0322	6" straight duct, S.Stl 6'3" − 9" (ell loss) = 5½	6	40S	6.065

F-145579-36-U-0004 Rev A

Complete OGTS Flow Data with Fan for tables in calc - checkers copy -- In Filters

	G	H	I	J	K
69					
70	5.5		ED4-1	0.22 — about the same as Fund.	
71	22 26.625		CR6-3	0.32	
72	=+SUM(G71)		Total:	=+SUM(J71)	Total:
73	=+G72/12		ft		
74					
75					
76	L		ASHRAE Fitting No	ASHRAE Loss Coef.	Cv
77	(in)				
78					
79			CR6-1/ER3-1	=0.97+1.15	
80	=8*12+4		CD11-1	ARROW	
81	20 — shouldn't include 90° of reducer		ED4-1	0.33 — about the same as Fund.	
82	0		ED4-2	0.72 — about the same as Fund.	
83	=+SUM(G79:G82)		Total:	=+SUM(J79:J82)	Total:
84	=+G83/12		ft		
85					
86	2				
87	11				
88	=+SUM(G86:G87)		Total:	=+SUM(J86:J87)	Total:
89	=+G88/12		ft		
90					
91			ED1-1	0.5	
92	30 → shouldn't be in pipe length CONSERVATIVE		ED4-1	0.76	
93	=3*12+8		CD11-1	ARROW	
94	=12+5		ED5-1	~~0.09~~ ~~ARROW~~	
95	=+SUM(G91:G94)		Total:	=+SUM(J91:J94)	Total:
96	=+G95/12		ft		
97					
98			ARROW	ARROW	155
99	17 — shouldn't be in pipe length close		ED5-1	~~0.07~~ ~~ARROW~~	
100	=5*12+10		CD11-1	ARROW	

ED4-1 $\rho 35.31 \left(\frac{6.065}{4.026}\right)^2 = 2.27$ $\theta = 22°$

θ	20	30
A_o/A_1	0.2	0.2
	0.64	0.64

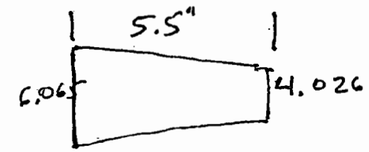

CR6-3 Can't check in Fund.

ED4-1 $\left(\frac{8.329}{12.39}\right)^2 = 0.45$ $\theta = 28.5$

θ	20	30
A_o/A_1	.25	.45	.52
	.50	.25	.30

ED4-2 $\frac{\frac{\pi}{4}(12.39)^2}{24^2} = 0.21$

ED4-1 $\left(\frac{12.39}{6.065}\right)^2 = 4.2$ $\theta = 41.3°$ Between 0.64-0.88

	A	B	C	D	E	F
101	"	Elbow	90° Elbow, R/D = 1.5, S.Stl	6	40S	6.065
102	P62	Outlet Piping, 6-AA-36-0322	6" straight duct, S.Stl	6	40S	6.065
103						Total:
104						
105						
106	J63	Reducer	6" x 5" Reducer, 11°	6 x 5	40S	6.065/5.047
107	P63	Elbow	90° Elbow, R/D = 1.5, S.Stl	5	40S	5.047
108	"	Lateral Tee	45° Lateral Flow Thru	5	40S	5.047
109	"	Straight Tee	5" Flow Thru	5	40S	5.047
110	"	Outlet Piping, 5-AA-36-0217	5" straight duct, S.Stl	5	40S	5.047
111	P63	Reducer	6" x 5" Reducer, 11°	5 x 6	40S	5.047/6.065
112	J64	Lateral Tee at SMF				Total:
113						
114						
115		Tempering Air Vent at Wet Scrubber Inlet, Stream No. 16A	1080 acfm at -12.6" w.g. and 77 °F			
116		Component	Details	Size	Schedule	Inside Dia.
117				(in)		(in)
118	J90	Atmospheric Junction				
119	P90	Inlet Elbow and screen	45° Elbow with birdscreen (60% Open), R/D = 1.5, S.Stl	12	10S	12.39
120	"	Inlet Elbow	90° Elbow, R/D = 1.5, S.Stl	12	10S	12.39
121	"	Inlet Piping, 12-AA-36-0323 Vertical	12" straight duct, S.Stl	12	10S	12.39
122	"	Inlet Elbow	90° Elbow, R/D = 1.5, S.Stl	12	10S	12.39
123	"	90° Wye	90° Wye, one branch closed	12	10S	12.39
124	P90	Inlet Transition	Flanders 12" Dia x 24" SQ, S.Stl, Sudden Expansion Drawing shows 12"			
125						Total:
126						
127						
128	J91	HEPA Filter, 36-N02-101, Pre	Flanders, dP @ 0.12" w.c. (0.24" Dirty) at 1000 acfm			
129	J91	HEPA Filter, 36-N02-101	Flanders, dP @ 1.0" w.c. (2.0" Dirty) at 1000 acfm, P-007-W-42-N2-NU-51-21-GG-FU5, 12" RF Flange Interface	24 x 24 x 22		12
130			Total Pressure drop at 1000 cfm	1.12	clean	Total:
131				2.24	dirty	
132						
133	P91	Outlet Transition	Flanders 12" Dia x 24" SQ, S.Stl, Sudden Contraction			
134	"	90° Wye	90° Wye, one branch closed	12	10S	12.39

Complete OGTS Flow Data with Fan for tables in calc - checkers copy -- In Filters

	G	H	I	J	K
101			CD3-1	0.14	
102	=8*12+8.5		CD11-1	~~0.02~~ ARROW	
103	=+SUM(G99:G102)		Total:	=+SUM(J99:J102)	Total:
104	=+G103/12		ft		
105					
106	5		ED4-1	0.09	
107			CD3-1	0.15	
108	18		ED5-2	~~0.02~~ ARROW OK	
109	14		ED5-3	~~0.48~~ ARROW	
110	9.75		CD11-1	ARROW	
111	5		ED4-1	0.09	
112	=+SUM(G107:G111)		Total:	=+SUM(J107:J111)	Total:
113	=+G112/12		ft		
114					
115					
116	L		ASHRAE Fitting No	ASHRAE Loss Coef.	Cv
117	(in)				
118					
119			CD6-1/CD3-14	=0.97 + 0.11	
120			CD3-9	0.18	
121	=36+12		CD11-1	ARROW	
122			CD3-9	0.18	
123	30 — double counts		ED5-6	~~0.64~~ ~~ARROW~~ OK	
124			ED4-2	~~0.73~~ .15	
125	=+SUM(G119:G124)		Total:	=+SUM(J119:J124)	Total:
126	=+G125/12		ft		
127					
128	2				
129	11				
130	=+SUM(G128:G129)		Total:	=+SUM(J128:J129)	Total:
131	=+G130/12		ft		
132					
133			ED1-1	0.5	
134	30 — double		ED5-1	~~0.24~~ ~~ARROW~~ OK	

ED5-2 Can't define laterals without knowing relative flow rates?

ED4-2 $\frac{\frac{\pi}{4}(12.39)^2}{12^2} = .83$ $\theta = 180$ $K = .15$

ED5-1?

Not much of a sudden contraction if filter is 12"

	A	B	C	D	E	F
135	"	Inlet Piping, 12-AA-36-0323	12" straight duct, S.Stl	12	10S	12.39
136	P91	90° Wye	90° Wye, one branch closed	12	10S	12.39
137						Total:
138						
139		at 1080 acfm and -11.26" w.g. 77 °F, 725 lb/hr, Cv ~ 448				
140	J92	FCV, FV-016	12" Keystone	12		11.375
141	P92	90° Wye	90° Wye, one branch closed	12	10S	12.39
142	"	Outlet Piping, 12-AA-36-0323	12" straight duct, S.Stl	12	10S	12.39
143	"	Outlet Elbow	90° Elbow, R/D = 1.5, S.Stl	12	10S	12.39
144	"	Outlet Piping, 12-AA-36-0323 Vertical	12" straight duct, S.Stl	12	10S	12.39
145	"	Outlet Elbow	90° Elbow, R/D = 1.5, S.Stl	12	10S	12.39
146	P92	Outlet Piping, 12-AA-36-0323	12" straight duct, w 3" and 6" Flow Thru Lateral, S. Stl.	12	10S	12.39
147	J93	12" x 6" Flow Thru Lateral	12" x 6" Flow Thru Lateral, 45°	12	10S	12.39
148						Total:
149						
150						
151		WSS Condenser Inlet, Stream No. 7C 579-3L-V-0006	137 acfm at -80.1" w.g. 77 °F, 605 lb/hr			
152		Component	Details		Size (in)	Schedule	Inside Dia. (in)
153							
154	J200	E Atmospheric Junction F-14579 E SECTION IS NOT IN MODEL OUTPUT BECAUSE IT IS ISOLATED PER DOTTED LINE ON MODEL DIAGRAM					
155	P200	Inlet Transition	24" Sq x 12" Dia with screen at 60% open Should there be an ER4-3 here?.				12.39
156	P200	Sudden Expansion	Flanders 12" Dia x 24" SQ, S.Stl, Sudden Expansion		12 x 24		12.39
157							Total:
158							
159							
160	J201	HEPA Filter, 36-N02-093 Pre	Flanders, 0.12" w.c. (0.24" Dirty) at 200 acfm				
161	J201	HEPA Filter, 36-N02-093	Flanders, 1.0" w.c. (2.0" Dirty) at 200 acfm, P-007-W-42-N2-NU-51-21-GG-DU5, 12" RF Flange Interface		24 x 24 x 16	NA	12
162			Total Pressure drop at 200 cfm	1.12		clean	Total:
163				2.24		dirty	
164							
165	P201	Sudden contraction	Flanders 12" Dia x 24" SQ, S.Stl, Sudden Contraction		24 x 12		12.39
166	P201	Reducer	12" x 6" Reducer, 41.5°		12 x 6"	40S	12.390/6.065
167							Total:

	G	H	I	J	K
135	=8+4*3		CD11-1	ARROW	
136	30		ED5-6	~~0.64~~ ~~ARROW~~	
137	=+SUM(G133:G136)		Total:	=+SUM(J133:J136)	Total:
138	=+G137/12	CAPPED Y TO 45° ELBOW ?	ft		
139					
140			ARROW	ARROW	6915
141	30 double		ED5-6	~~0.64~~ ~~ARROW~~	
142	8		CD11-1	ARROW	
143			CD3-9	0.18	
144	38.5		CD11-1	ARROW	
145			CD3-9	0.18	
146	7.5		CD11-1	ARROW	
147			ED5-2	0.02	
148	=+SUM(G140:G147)		Total:	=+SUM(J140:J147)	Total:
149	=+G148/12		ft		
150					
151					
152	L		ASHRAE Fitting No	ASHRAE Loss Coef.	Cv
153	(in)				
154					
155	20		CR6-1	0.06	
			ER4-3		
156			ED4-2	0.73	
157	=+SUM(G155:G156)		Total:	=+SUM(J155:J156)	Total:
158	=+G157/12		ft		
159					
160	2				
161	4				
162	=+SUM(G160:G161)		Total:	=+SUM(J160:J161)	Total:
163	=+G162/12		ft		
164					
165			ED1-1	0.5	
166	10.5		ED4-1	0.76	
167	=+SUM(G165:G166) Includes reducer length		Total:	=+SUM(J165:J166)	Total:

CR6-1 $\frac{24^2}{\frac{\pi}{4}(12.39)^2} = 4.78$ n = .6 K = .04

ER4-3 $\frac{A_0}{A_1} = 4.78$ θ ≅ 30 K ≅ 1

ED4-2 $\frac{\frac{\pi}{4}(12.39)^2}{24^2} = .21$ K ≈ 0.73

ED4-1 $\left(\frac{12.39}{6.065}\right)^2 = 4.2$ K between 0.64 – 0.88

	A	B	C	D	E	F
168						
169		at 137 acfm and -80.1" w.g. 77 °F, 605 lb/hr, Cv ~ 22				
170	J202	Flow Control Valve, FV-331	6" Keystone	6	40S	=13/16+5
171	P202	Outlet Piping, 6-AA-36-0237	6" straight duct, C. Stl	6	40S	6.065
172						Total:
173						
174						
175	J203	45° Lateral	45° Lateral, Flow Thru, 6 x 6	6	40S	6.065
176	P203	Outlet Piping, 6-AA-36-0237	6" straight duct, C. Stl	6	40S	6.065
177	P203	Outlet Elbow	90° Elbow, R/D = 1.5, C.Stl	6	40S	6.065
178	J204	45° Lateral	45° Lateral 6 x 4 x 8, Flow thru	4x 6 x 8"	40S	6.065/8.329
179						Total:
180						
181						
182	P204	Outlet Piping, 8-AA-36-0237	8" Straight duct	8"	10S	8.329
183	"	90 Elbow	90° Elbow, R/D = 1.5, C.Stl	8"	10S	8.329
184	"	Pipe	8" Straight duct	8"	10S	8.329
185	"	90 Elbow	90° Elbow, R/D = 1.5, C.Stl	8"	10S	8.329
186	P204	Straight Tee at WSS Condenser Inlet	16 x 16 x 8 Straight Tee, branch flow	16 x 16 x 8	10S	8.329
187	J21	WSS Tee (See WSS)				Total:
188						
189	J209	Assigned flow from Waste Dryer Vac. Pump Stream 7	42 Lbm/hr			
190	P209	Piping, 6-VOG-33-0155	6" straight duct, C. Stl	6	40S	6.065
191	J204	45° Lateral (See above)				
192						
193		Tempering Air Vent at SCR Inlet, Stream No. 39	3181 acfm at -96.2" w.g. and 77 °F, 13,468 lb/hr			
194		Component	Details	Size (in)	Schedule	Inside Dia. (in)
195						
196	J100 F	Atmospheric Junction V-0007				
197	P100	Inlet Elbow and screen	45° Elbow with birdscreen (60% Open), R/D = 1.5, C.Stl	14	10S	13.624
198	"	Inlet Elbow	90° Elbow, R/D = 1.5, C.Stl	14	10S	13.624
199	"	Inlet Piping, 14-AA-36-0275	14" straight duct (3'-4"L), C.Stl	14	10S	13.624
200	"	Inlet Elbow	90° Elbow, R/D = 1.5, C.Stl	14	10S	13.624
201	P100	Inlet Transition	Flanders 14" Dia x 48" H x 24" W, S.Stl	14	10S	13.624
202						Total:
203			Drawing shows transition to square			
204						

Complete OGTS Flow Data with Fan for tables in calc - checkers copy -- In Filters

	G	H	I	J	K
168	=+G167/12		ft		
169					
170			ARROW	ARROW	22
171	6		CD11-1	ARROW	
172	=+SUM(G170:G171)		Total:	=+SUM(J170:J171)	Total:
173	=+G172/12		ft		
174					
175	17		ED5-2	0.02	
176	7		CD11-1	ARROW	
177			CD3-9	0.14	
178	10		ED5-2	0.19	
179	=+SUM(G176:G178)		Total:	=+SUM(J176:J178)	Total:
180	=+G179/12		ft		
181					
182	20		CD11-1	ARROW	
183			CD3-9	0.14	
184	42		CD11-1	ARROW	
185			CD3-9	0.14	
186			ED5-3	0.53	
187	=+SUM(G182:G186)		Total:	=+SUM(J182:J186)	Total:
188	=+G187/12		ft		
189					
190	6		CD11-1	ARROW	
191					
192					
193					
194	L		ASHRAE Fitting No	ASHRAE Loss Coef.	Cv
195	(in)				
196					
197			CD6-1/CD3-14	=0.97 + 0.11	
198			CD3-9	0.17	
199	32		CD11-1	ARROW	
200			CD3-9	0.17	
201	18.5		ED4-2	0.55	
202	=+SUM(G197:G201)		Total:	=+SUM(J197:J201)	Total:
203	=+G202/12		ft		
204					

ED5-2

$K_b = ?$

$K_s = ?$ Depends on Relative flows

CD6-1 $\frac{A_1}{A_0} = 1$ $n = 0.60$ $K = 0.97$

CD3-14 $K = .11$

CD3-9 $K = .17$

ED4-2 $\frac{(13.624)^2 \frac{\pi}{4}}{24 \times 48} = .12$

.24

$K = 0.55$ is reasonable

$K = .45$ if square

	A	B	C	D	E	F
205	J101	Medium Effeciency Pre-Filter, 36-N02-022	Flanders, dP @ 0.2" w.c. (0.4" Dirty) at 2000 acfm, Pre-Pleat 40 (2 ea filters in parallel, 0.2" w.c. at 4000 acfm)	24 x 48 x 2		
206	J101	Medium Effeciency Filter, 36-N02-022	Flanders, dP @ 0.5" w.c. (1.0" Dirty) at 2000 acfm, PCEL-85-4412H-GD-FD (2 ea filters in parallel, 0.5" w.c. at 4000 acfm),	24 x 48 x 12		
207			Total Pressure drop at 4000 cfm	0.7	clean	Total:
208				1.4	dirty	
209						
210		at 3181 acfm and -96.2" w.g., 77 °F, Cv ~ 455				
211	P101	Outlet Transition	~~Sudden Contraction,~~ Flanders 14" Dia x 24" x 48", S.Stl	24 x 48 x 14	10S	13.624
212	J102	FCV, HV-504	14" Keystone	14		12.5
213	P102	Outlet Piping, 14-AA-36-0275	14" straight duct at 8" L, C.Stl	14	10S	13.624
214	J103	Isolation Valve, 36-V-019	14" Keystone	14	10S	13.624
215	P103	Outlet Piping, 14-AA-36-0275	14" straight duct	14	10S	13.624
216	P103	Outlet Elbow	90° Elbow, R/D = 1.5, C.Stl	14	10S	13.624
217	P103	Outlet Piping, 14-AA-36-0275	14" straight duct	14	10S	13.624
218	J33	Lateral Tee into 22-VOG-36-0273	45° Lateral, 14" x 16 x 20", Branch Flow into Main flow @3250 cfm	14	10S	13.624
219						Total:
220						
221						
222		Housings are 304L S. STL 14 and 11 gauge				
223		dP at 4000 cfm for Housings				
224		dP at 1250 cfm for HEPA				
225		Design Flow rate of 4819 ACFM				
226		Design Pressure Drop 1.75 in w.c.				
227		Design Temperature of 167 °F				

	G	H	I	J	K
205	2				
206	12				
207	=+SUM(G205:G206)		Total:	=+SUM(J205:J206)	Total:
208	=+G207/12		ft		
209					
210			ER4-3		
211	18.5		~~ED1-1~~	0.5	
212			ARROW	ARROW	8300
213	8		CD11-1	ARROW	
214			ARROW	ARROW	8300
215	6		CD11-1	ARROW	
216			CD3-9	0.17	
217	36		CD11-1	ARROW	
218	17.5		ED5-1	~~0.12~~ ARROW	
219	=+SUM(G215:G218)		Total:	=+SUM(J212:J218)	Total:
220	=+G219/12		ft		
221					
222					
223					
224					
225					
226					
227					

ER4-3 $\frac{24^2}{\frac{\pi}{4}(13.624)^2} = 3.95$ K = .7

why ARE JUNCTIONS INCLUDED IN THIS TOTAL?

	A	B	C	D	E	F
1		OGTS Ducting				
2		ICV Outlet, Stream No 13	280 acfm at -2.46" w.g. and 875 °F, 513 lb/hr			
3		Component	Details	Size (in)	Schedule	Inside Dia. (in)
4	B					
5	J6	ICV Outlet				
6	P6	Piping, 6-VOG-35-0217	6" Duct	6	40S	6.065
7	P6	Elbow	90° Elbow, R/D = 1.5	6	40S	6.065
8						
9	J7	Reducer	5 x 6 Reducer, 11°	6 x 5	40S	6.065/5.047"
10	P7	Expansion Joint, EJ-502 V-0003 Rev I	DME 5" size 26.625"	5		4.9
11	"	Piping, 5-VOG-35-0217	5" Duct	5	40S	5.295
12	"	Elbow	45° Elbow, R/D = 1.5	5	40S	5.295
13	"	Piping, 5-VOG-35-0217	5" Duct 73.625	5	40S	5.295
14	P7	Elbow	45° Elbow, R/D = 1.5	5	40S	5.295
15						Total:
16						
17						
18	J8	Lateral Tee (For Bypass Flow)	45° Lateral Branch Flow, Main Flow Closed	5 x 5 x 5	40S	5.047
19	P8	Piping, 5-VOG-35-0217	5" Duct	5	40S	5.047
20	P8	Reducer	5 x 6 Reducer, 11°	5 x 6	40S	5.047/6.065
21						Total:
22						
23						
24	J9	Valve, HV-114	6" Keystone	6		5.8125
25	P9	Piping, 6-VOG-35-0217	6" Duct	6	40S	6.065
26	P9	Expansion Joint, EJ-503	DME 6"	6		5.782
27						Total:
28						
29						
30	J10	Valve, HV-115	6" Keystone	6		5.8125
31	P10	Piping, 6-VOG-35-0217	6" Duct	6	40S	6.065
32	"	Elbow	45° Elbow, R/D = 1.5	6	40S	6.065
33	"	Piping, 6-VOG-35-0217	6" Duct	6	40S	6.065
34	P10	Reducer	5 x 6 Reducer, 11°	6 x 5	40S	6.065/5.047"
35						Total:
36						
37						
38	J55	Lateral	45° Lateral, Thru Flow	5	40S	5.047
39	P55	Piping, 6-VOG-35-0217	5" Duct	5	40S	5.047
40	P55	Elbow	45° Elbow, R/D = 1.5	5	40S	5.047
41						Total:
42						

	G	H	I	J	K
1					
2					
3	L		ASHRAE Fitting No	ASHRAE Loss Coef.	Cv
4	(in)				
5					
6	=6*12 ESTIMATED		CD11-1	ARROW	
7			CD3-3	0.08	
8					
9	~~10.25~~ 5½		ED4-1	0.09 ✓	
10	~~24~~ 26.625		CR6-3	0.27	
11	~~24~~ 18		CD11-1	ARROW	
12			CD3-3	0.09 ✓	
13	~~93.5~~ 6*12+7.875−6.25=73.625		CD11-1	ARROW	
14		MAY HAVE 20" IN ANOTHER VIEW 20"	CD3-3	0.09 ✓	
15	=+SUM(G10:G14) ✓	=+G15/12	Total:	=+SUM(J10:J14) ✓	
16	HIGHER NUMBER IS CONSEVATIVE 20"				
17					
18	10		ED5-2	0.02	
19	6		CD11-1	ARROW	
20			ED4-1	0.07	
21	=+SUM(G19:G20)	=+G21/12	Total:	=+SUM(J19:J20)	
22					
23					
24			ARROW	ARROW	1194
25	=19.5+8		CD11-1	ARROW	
26	11		CR6-3	0.24	
27	=+SUM(G25:G26)		Total:	=+SUM(J25:J26)	
28	=+G27/12		ft		
29					
30			ARROW	ARROW	1194
31	=24+8		CD11-1	ARROW	
32			CD3-3	0.08	
33	9		CD11-1	ARROW	
34			ED4-1	0.09	
35	=+SUM(G31:G34)		Total:	=+SUM(J31:J34)	
36	=+G35/12		ft		
37					
38			ED5-2	0.02	
39	9.5		CD11-1	ARROW	
40			CD3-3	0.08	
41	=+SUM(G39:G40)		Total:	=+SUM(J39:J40)	
42	=+G41/12		ft		

$$ED4\text{-}1 \left(\frac{6.068}{5.047}\right)^2 = 1.44 \qquad K = .09$$

	A	B	C	D	E	F
43						
44	J64	Lateral	45° Lateral, Brach Flow	5	40S	5.047
45		(SMF #1 Inlet Header, See SMF)				
46						
47						
48						
49		AWTE Outlet, Stream No. 13A	80 acfm at -2.57" w.g. and 77 °F, 350 lb/hr			
50		Component	Details	Size	Schedule	Inside Dia.
51				(in)		(in)
52	J53	AWTE Outlet				
53	P53	Expansion Joint, EJ-407	DME 4" 26.625"	4		4.025
54	P53	Piping, 4-VOG-34-0212	4" Duct	4	40S	4.026
55						Total:
56						
57						
58	J54	Valve, HV-113	4" Keystone			3.875
59	P54	Piping, 4-VOG-34-0212	4" Duct 3'6.5" - 6	4	40S	4.026
60	"	Elbow	90° Elbow, R/D = 1.5	4	40S	4.026
61	"	Piping, 4-VOG-34-0212	4" Duct	4	40S	4.026
62	"	Elbow	90° Elbow, R/D = 1.5	4	40S	4.026
63	P54	Piping, 4-VOG-34-0212	4" Duct	4	40S	4.026
64						Total:
65						
66						
67	J55	Lateral	45° Lateral Tee, Branch Flow	4	40S	4.026
68						Total:
69						
70						
71		Dry Waste Receiver Vacuum Pump Vent	Outlet: 600 ACFM, 2750 lb/hr			
72		Component	Details	Size	Schedule	Inside Dia.
73				(in)		(in)
74	J80	Assigned flow from Waste Dryer Vac. Pump	2750 Lbm/hr			
75	P80	Piping, 6-VOG-33-0201		6	40S	6.065
76						
77		WRS Staging Tank Vent Stream No. 17	Outlet: 380 acfm at -12.6" w.g. and 572 °F, 858 lb/hr			
78		Component	Details	Size	Schedule	Inside Dia.

	G	H	I	J	K
43					
44			ED5-2	0.02	
45					
46					
47					
48					
49					
50	L		ASHRAE Fitting No	ASHRAE Loss Coef.	Cv
51	(in)				
52					
53	26.625	Double Counting length	CR6-3	0.32	
54	=48+9		CD11-1	ARROW	
55	=+SUM(G53:G54)	CONSERVATIVE LENGTH	Total:	=+SUM(J53:J54)	
56	=+G55/12		ft		
57					
58			ARROW	ARROW	425
59	=36+6.5-6		CD11-1	ARROW	
60			CD3-1	0.2	
61	=20*12+4		CD11-1	ARROW	
62			CD3-1	0.2	
63	2.75		CD11-1	ARROW	
64	=+SUM(G59:G63)		Total:	=+SUM(J59:J63) ✓	
65	=+G64/12		ft		
66					
67			ED5-2	0.02	
68	=+SUM(G67)		Total:	=+SUM(J67)	
69	=+G68/12		ft		
70					
71					
72	L		ASHRAE Fitting No	ASHRAE Loss Coef.	Cv
73	(in)				
74					
75	NA				
76					
77					
78	L		ASHRAE Fitting No	ASHRAE Loss Coef.	Cv

	A	B	C	D	E	F
79				(in)		(in)
80	J80	Atmospheric Junction				
81	P80	Inlet Pipe	1-1/2" Pipe	1-1/2	40S	1.61
82	J81	HEPA Filter, 32-N02-016B	Flanders, dP @ 1.3" w.c. (2.6" Dirty) at 40 acfm at -1.3" w.g., 0-007-1-12-RF-NU-00-E3-Z04059	6		
83	P81	Inlet Pipe	1-1/2" Pipe	1-1/2	40S	1.61
84	J82	Staging tank, 32-D74-016	Tank inlet and outlet Loss Coef.	Large		
85	P82	2-VOG-32-0113	2" Pipe	2	40S	2.067
86						Total:
87						
88						
89	J83	Iso Valve, 32-V-003	2" Ball	2	40S	2.067
90	P83	2-VOG-32-0113	2" Pipe	2	40S	2.067
91	"	Elbow	90° Elbow, R/D = 1.5	2	40S	2.067
92	"	2-VOG-32-0113	2" Pipe	2	40S	2.067
93	"	Elbow	90° Elbow, R/D = 1.5	2	40S	2.067
94	"	2-VOG-32-0113	2" Pipe	2	40S	2.067
95	"	Tee	2" Flow-thru Tee	2	40S	2.067
96	P83	2-VOG-32-0113	2" Pipe	2	40S	2.067
97						Total:
98						
99						
100	J84	Reducer	2" x 3" Reducer, 18°	2 x 3"	40S	2.067/3.068
101	P84	Lateral	3" Flow-thru Lateral, 45°	3	40S	3.068
102	"	3-VOG-32-0113	3" Pipe	3	40S	3.068
103	"	Elbow	90° Elbow, R/D = 1.5	3	40S	3.068
104	"	3-VOG-32-0113	3" Pipe	3	40S	3.068
105	"	Elbow	90° Elbow, R/D = 1.5	3	40S	3.068
106	"	3-VOG-32-0113	3" Pipe	3	40S	3.068
107	"	Elbow	45° Elbow, R/D = 1.5	3	40S	3.068
108	"	3-VOG-32-0113	3" Pipe	3	40S	3.068
109	"	Elbow	45° Elbow, R/D = 1.5	3	40S	3.068
110	"	3-VOG-32-0113	3" Pipe	3	40S	3.068
111	"	Elbow	90° Elbow, R/D = 1.5	3	40S	3.068
112	P84	3-VOG-32-0113	3" Pipe	3	40S	3.068
113	J94	(Scrubber Inlet Header)				Total:
114						
115						
116						
117		Sec. Waste Storage Tank Vent, Stream No. 7D	10 acfm at -80.1" w.g. and 77 °F			
118		Component	Details	Size	Schedule	Inside Dia.
119				(in)		(in)

	G	H	I	J	K
79	(in)				
80					
81	6		CD11-1	ARROW	
82					
83	24		CD11-1	ARROW	
84				1.5	
85	18		CD11-1	ARROW	
86	=+SUM(G82:G85)		Total:	=+SUM(J82:J85)	
87	=+G86/12		ft		
88					
89	3		Arrow	ARROW	
90	17		CD11-1	ARROW	
91			CD3-1	0.3	
92	36		CD11-1	ARROW	
93			CD3-1	0.3	
94	42		CD11-1	ARROW	
95			ED5-3	1.92	
96	51		CD11-1	ARROW	
97	=+SUM(G89:G96)		Total:	=+SUM(J89:J96)	
98	=+G97/12		ft		
99					
100			ED4-1	0.18	
101			ED5-2	0.02	
102	357		CD11-1	ARROW	
103			CD3-1	0.3	
104	144		CD11-1	ARROW	
105			CD3-1	0.3	
106	150		CD11-1	ARROW	
107			CD3-3	0.18	
108	10		CD11-1	ARROW	
109			CD3-3	0.18	
110	100		CD11-1	ARROW	
111			CD3-1	0.3	
112	43		CD11-1	ARROW	
113	=+SUM(G100:G112)		Total:	=+SUM(J101:J112)	
114	=+G113/12		ft		
115					
116					
117					
118	L		ASHRAE Fitting No	ASHRAE Loss Coef.	Cv
119	(in)				

	A	B	C	D	E	F
120	J210	Atmospheric Junction				
121	P210	Inlet Pipe	1-1/2" Pipe	1-1/2	40S	1.61
122	J211	HEPA Filter, 37-N02-014A	Flanders, dP @ 1.3" w.c. (2.6" Dirty) at 40 acfm at -1.3" w.g., 0-007-1-12-RF-NU-00-E3-Z04059	6		
123	P211	Inlet Pipe	1-1/2" Pipe	1-1/2	40S	1.61
124	J212	Storage Tank, 37-D74-010 — J212 modeled as 1½-2 expander with K=1.5	1-1/2" Inlet to 2" Outlet	Large		
125	P212	2-VOG-37-0370	2" Pipe	2	40S	2.067
126	J213	Iso Valve, 37-V-004 Can't see through	2" Ball	2	40S	2.067
127	P213	2-VOG-37-0370	2" Pipe	2	40S	2.067
128	"	Elbow	90° Elbow, R/D = 1.5 looks like 45°	2	40S	2.067
129	"	2-VOG-37-0370	2" Pipe	2	40S	2.067
130	"	Elbow	45° Elbow, R/D = 1.5	2	40S	2.067
131	"	2-VOG-37-0370	2" Pipe	2	40S	2.067
132	"	Elbow	90° Elbow, R/D = 1.5	2	40S	2.067
133						Total:
134						
135						
136	J214	Reducer	2" x 3" std reducer, 18°	2 x 3"	40S	2.067/3.068
137	P214	3-VOG-37-0370	3" Pipe	3	40S	3.068
138	"	Lateral	45° Lateral, Flow-thru	3	40S	3.068
139	"	3-VOG-37-0370	3" Pipe	3	40S	3.068
140						Total:
141						
142						
143	J215	Reducer	3" x 4" std reducer, 14°	3	40S	3.068/4.026
144	P215	Lateral	45° Lateral, Flow-thru	4	40S	4.026
145	"	4-VOG-37-0370	4" Pipe	4	40S	4.026
146	"	Lateral	45° Lateral, Flow-thru	4	40S	4.026
147	"	Elbow	45° Elbow, R/D = 1.5	4	40S	4.026
148	"	4-VOG-37-0370	4" Pipe	4	40S	4.026
149	"	Elbow	45° Elbow, R/D = 1.5	4	40S	4.026
150	"	4-VOG-37-0370	4" Pipe	4	40S	4.026
151	"	Elbow	90° Elbow, R/D = 1.5	4	40S	4.026
152	"	4-VOG-37-0370	4" Pipe	4	40S	4.026
153	"	Elbow	90° Elbow, R/D = 1.5	4	40S	4.026
154	"	4-VOG-37-0370	4" Pipe	4	40S	4.026
155	"	Elbow	90° Elbow, R/D = 1.5	4	40S	4.026
156	P215	4-VOG-37-0370	4" Pipe	4	40S	4.026
157	J203	(Wet Scrubber Air Dilution Connection)				Total:
158						

	G	H	I	J	K
120					
121	6		CD11-1	ARROW	
122					
123	20		CD11-1	ARROW	
124				1.5	
125	18 ? looks longer than this		CD11-1	ARROW	
126			~~CD11-1~~	? ARROW	
127	17		CD11-1	ARROW	
128			CD3-1	0.3	
129	32.25		CD11-1	ARROW	
130			CD3-1	0.3	
131	132.5		CD11-1	ARROW	
132			CD3-1	0.3	
133	=+SUM(G127:G132)		Total:	=+SUM(J127:J132) ✓	
134	=+G133/12		ft		
135					
136			ED4-1	0.18	
137	157.5		CD11-1	ARROW	
138	20		ED5-2	0.02	
139	136		CD11-1	ARROW	
140	=+SUM(G137:G139)		Total:	=+SUM(J137:J139)	
141	=+G140/12		ft		
142					
143	4		ED4-1	0.12	
144	20		ED5-2	0.02	
145	134		CD11-1	ARROW	
146	20		ED5-2	0.02	
147			CD3-3	0.13	
148	24		CD11-1	ARROW	
149			CD3-3	0.13	
150	728.5		CD11-1	ARROW	
151			CD3-1	0.2	
152	93.5		CD11-1	ARROW	
153			CD3-1	0.2	
154	15 ? don't seem to agree with drawing		CD11-1	ARROW	
155			CD3-1	0.2	
156	11		CD11-1	ARROW	
157	=+SUM(G144:G156)		Total:	=+SUM(J144:J156)	
158	=+G157/12		ft		

	A	B	C	D	E	F
1		SMF Assembly	Inlet: 370 acfm at -2.6" w.g. and 572 °F		Outlet: 380 acfm at -12.6" w.g. and 572 °F	
2		Component		Size	Schedule	Inside Dia.
3						(in)
4	P64	Inlet Piping	5" Sch 10 Pipe, with 5 x 6 Reducer and flow thru Tee	5	40S	5.047
5	J65	Isolation Valve, HV-002	6" Keystone	6		5.8125
6	P65	Reducer	10 x 6 Std Reducer, 32.4°	6 x 10	40S	6.065/10.42
7	P65	Inlet Piping	10" Sch 10 Pipe, 316 S.Stl	10	10S	10.42
8						Total:
9						
10						
11	J66	Inlet Sudden Expanson	10 x 26	10	10S	10.42
12	J66	Tank 1 Flow	Tank ID is 25.376"	26	10S	25.376
13	J66	Filter Elements, N02-019	Microfiltrex sintered metal 3.2 in w.c. dP (6.4" Dirty) at 1000 acfm	26		25.376
14	J66	Outlet Sudden Contraction	26 x 10	26	10S	25.376
15						
16						
17	P66	Outlet Piping	10" Sch 10 Pipe, 316 S.Stl	10	10S	10.42
18	"	Reducer	10 x 6 Std Reducer, 32.4°	10 x 6	40S	10.42/6.065
19	"	Interconnecting Piping	6" Sch 10 Pipe, 316 S.Stl	6	40S	6.065
20	"	Expansion Joint EJ-602	6" DME	6		5.9
21	P66	Interconnecting Piping	6" Sch 10 Pipe, 316 S.Stl	6	40S	6.065
22						Total:
23						
24						
25	J67	Isolation Valve, HV-003	6" Keystone	6	40S	5.8125
26	P67	6" 90° Elbow	90° Elbow, R/D = 1.5, S.Stl	6	40S	6.065
27	"	6" Interconnecting Piping	6" Sch 10 Pipe, 316 S.Stl	6	40S	6.065
28	"	6" Straight Tee	6" Straight Tee, Flow through	6	40S	6.065
29	"	6" Interconnecting Piping	6" Sch 10 Pipe, 316 S.Stl	6	40S	6.065
30	P67	6" 90° Elbow	90° Elbow	6	40S	6.065
31						Total:
32						
33						
34	J68	Isolation Valve, HV-004	6" Keystone	6	40S	5.8125
35	P68	Interconnecting Piping	6" Sch 10 Pipe, 316 S.Stl	6	40S	6.065
36	"	Expansion Joint EJ-603	6" DME	6	40S	5.9
37	"	Reducer	10 x 6 Std Reducer, 32.4°	6 x 10	40S	6.065/10.42
38	P68	Inlet Piping	10" Sch 10 Pipe, 316 S.Stl	10	10S	10.42

	G	H	I	J	K
1					
2	L		ASHRAE Fitting No	ASHRAE Loss Coef.	Cv
3	(in)				
4	24		CD11-1	ARROW	
5			ARROW	ARROW	1194
6	10		ED4-1	0.4	
7	8		CD11-1	ARROW	
8	=+SUM(G5:G7)		Total:	=+SUM(J5:J7)	Total:
9	=+G8/12		ft		
10					
11			ED4-1	0.73	
12	36		CD11-1	ARROW	
13					
14			ED1-1	0.5	
15					Total:
16					
17	8		CD11-1	ARROW	
18	7		ED4-1	0.37	
19	6		CD11-1	ARROW	
20	11		CR6-3	0.24	
21	120		CD11-1	ARROW	
22	=+SUM(G17:G21)		Total:	=+SUM(J17:J21)	Total:
23	=+G22/12		ft		
24					
25			ARROW	ARROW	1194
26			CD3-1	0.13	
27	12		CD11-1	ARROW	
28			ED5-3	0.02	
29	12		CD11-1	ARROW	
30			CD3-3	0.13	
31	=+SUM(G25:G29)		Total:	=+SUM(J25:J29)	Total:
32	=+G31/12		ft		
33					
34			ARROW	ARROW	1194
35	12		CD11-1	ARROW	
36	11		CR6-3	0.24	
37	10		ED4-1	0.4	
38	8		CD11-1	ARROW	

	A	B	C	D	E	F
39						Total:
40						
41						
42	J69	Inlet Sudden Expanson	10 x 26	10	10S	10.42
43	J69	Tank 2 Flow	Tank ID is 25.376"	26	10S	25.376
44	J69	Filter Elements, N02-020	Microfiltrex sintered metal 3.2 in w.c. dP (6.4" Dirty) at 1000 acfm	26		25.376
45	J69	Outlet Sudden Contraction	26 x 10	26	10S	25.376
46	P69	Outlet Piping	10" Sch 10 Pipe, 316 S.Stl	10	10S	10.42
47	"	Reducer	10 x 8 Std Reducer, 17°	10 x 8	10S	10.42/8.329
48	P69	Elbow	90° Elbow, R/D = 1.5	8	10S	8.329
49						Total:
50						
51						
52	J70	Isolation Valve, HV-005	8" Keystone	8		7.625
53	P70	Piping, 8-VOG-36-0306	8" Duct	8	10S	8.329
54	"	Elbow	45° Elbow, R/D = 1.5	8	10S	8.329
55	"	Piping, 8-VOG-36-0306	8" Duct	8	10S	8.329
56	"	Tee	8" Straight Tee, Flow thru	8	10S	8.329
57	"	Piping, 8-VOG-36-0306	8" Duct	8	10S	8.329
58	"	Elbow	90° Elbow, R/D = 1.5	8	10S	8.329
59	"	Piping, 8-VOG-36-0306	8" Duct	8	10S	8.329
60	"	Elbow	45° Elbow, R/D = 1.5	8	10S	8.329
61	"	Piping, 8-VOG-36-0306	8" Duct	8	10S	8.329
62	"	Elbow	90° Elbow, R/D = 1.5	8	10S	8.329
63	P70	Piping, 8-VOG-36-0306	8" Duct	8	10S	8.329
64	J16	Lateral	45° Lateral Tee, Branch Flow	8	10S	8.329
65						Total:
66						
67						
68		Tanks are 304 S. STL				
69		3.2 in w.c. dP at 1000 acfm for each SMF				
70		Design Flow rate of 1000 ACFM				
71		Assumed Pressure Drop 9.6 " w.c.for Dual SMFs				
72		Nominal Operating flow rate: 862 ACFM				
73		Design Temperature of 300 °C (572 °F)				
74		f, friction factor, determined by the ASHRAE Database program at specified conditions, pressure, temperature, flow rate and ID				

	G	H	I	J	K
39	=+SUM(G34:G38)		Total:	=+SUM(J34:J38)	Total:
40	=+G39/12		ft		
41					
42			ED4-1	0.73	
43	36		CD11-1	ARROW	
44			Vendor	Vendor	
45			ED1-1	0.5	
46	8		CD11-1	ARROW	
47	7		ED4-1	0.11	
48			CD3-1	0.11	
49	=+SUM(G46:G48)		Total:	=+SUM(J46:J48)	Total:
50	=+G49/12		ft		
51					
52			ARROW	ARROW	2440
53	=24+5.5		CD11-1	ARROW	
54			CD3-3	0.07	
55	=5*12+6.5		CD11-1	ARROW	
56			ED5-3	1.92	
57	=13*12		CD11-1	ARROW	
58			CD3-1	0.11	
59	=48+5.625 ?		CD11-1	ARROW	
60			CD3-3	0.07	
61	=12*8+7.25		CD11-1	ARROW	
62			CD3-1	0.11	
63	=9*12+10.25		CD11-1	ARROW	
64			ED5-2	0.02	
65	=+SUM(G52:G64)		Total:	=+SUM(J52:J64)	Total:
66	=+G65/12		ft		
67					
68					
69					
70					
71					
72					
73					
74					

	A	B	C	D	E	F
1		Wet Scrubber Inlet, Stream No. 19	3115 acfm at -13.6" w.g. and 134 °F, 12,375 lb/hr			
2		Component	Details	Size	Schedule	Inside Dia.
3				inch		inch
4	J93	WSS Air Dilution Filter and Dryer Waste Receivers	45° ~~Lateral,~~ 12 x 12 x 6, Flow thru (not a lateral)	12 x 12 x 6	10S	=+G4*12
5	P93	Pipe	12" Sch 10 Pipe, 316 S.Stl	12	10S	=+G5*12
6	J94	WSS Air Dilution Filter and LAW Staging Tank Vent Lateral	45° Lateral, 12 x 12 x ~~3~~ 6?, Flow thru	12 x 12 x 3	10S	=+G6*12
7	P94	Pipe	12" Sch 10 Pipe, 316 S.Stl	12	10S	=+G7*12
8	J16	WSS Air Dilution Filter and SMF Outlet	45° Lateral, 16 x 12 x ~~3~~ 8, Flow thru	16 x 12 x 3	10S	=+G8*12
9	P16	Pipe	16" Sch 10 Pipe, 316 S.Stl 4x12+3.5-24 = 27.5"	16	10S	=+G9*12
10	"	Elbow	90° - Std Radius	16	10S	=+G10*12
11	"	Pipe Vertical	16" Sch 10 Pipe, 316 S.Stl	16	10S	=+G11*12
12	"	Elbow	90° - Std Radius	16	10S	=+G12*12
13	P16	Pipe	16" Sch 10 Pipe, 316 S.Stl 4x12+6-24	16	10S	=+G13*12
14						Total:
15						
16		Wet Scrubber System				
17		Component	Details	Size	Schedule	Inside Dia.
18				inch		inch
19	J17	Butterfly Valve, 36-V-049	16" Keystone	16		=+G19*12
20	P17	Flange	150#	16	10S	=+G20*12
21	P17	Pipe	16" Sch 10 Pipe, 316 S.Stl	16	10S	=+G21*12
22	P17	Flange	150#	16	10S	=+G22*12
23	J18	Butterfly Valve, HV-125	16" Keystone	16		=+G23*12
24						Total:
25						
26						
27	P18	Flange	150#	16	10S	=+G27*12
28	P18	Expansion Joint	DME 16"	16		=+G28*12
29	P18	Pipe	16" Sch 10 Pipe, 316 S.Stl	16	10S	=+G29*12
30						Total:
31						
32						
33	J19	Packed tower	3.83" w.c. @ 3133 acfm, quadratic			
34	P19	Pipe	16" Sch 10 Pipe, 316 S.Stl	16	10S	=+G34*12

Complete OGTS Flow Data with Fan for tables in calc - checkers copy -- WSS

	G	H	I	J	K	L	M
1							
2	Inside Dia.	L	L		ASHRAE Fitting No	ASHRAE Loss Coef.	Cv
3	ft	inch	ft				
4	=12.39/12						
5	=12.39/12	=+I5*12	0.5		CD11-1	ARROW	
6	=12.39/12						
7	=12.39/12	=+I7*12	=+(12+11)/12		CD11-1	ARROW	
8	1.302						
9	1.302	=+I9*12	2.33333333333333	$\frac{27.5}{12} = 2.3$	CD11-1	ARROW	
10	1.302				CD3-1	0.18	
11	1.302	=+I11*12	2.75		CD11-1	ARROW	
12	1.302				CD3-1	0.18	
13	1.302	=+I13*12	=4*12+10-48 ?		CD11-1	ARROW	
14		=+SUM(H9:H13)	=+SUM(I9:I13)		Total:	=+SUM(L9:L13)	Total:
15		=+H14/12			ft		
16							
17	Inside Dia.		L		ASHRAE Fitting No	ASHRAE Loss Coef.	Cv
18	ft		ft				
19	=14.3125/12				ARROW	ARROW	10040
20	1.302	=+I20*12	0.42		NA		
21	1.302	=+I21*12	1.5		CD11-1	ARROW	
22	1.302	=+I22*12	0.42		NA		
23	=14.3125/12				ARROW	ARROW	10040
24		=+SUM(H19:H23)	=+SUM(I19:I23)		Total:	=+SUM(L19:L23)	Total:
25		=+H24/12			ft		
26							
27	1.302	=+I27*12	0.42		NA	0	
28	=15.15/12	=+I28*12	0.666666666666667		CR6-3	0.11	
29	1.302	=+I29*12	1		CD11-1	ARROW	
30		=+SUM(H27:H29)	=+SUM(I25:I29)		Total:	=+SUM(L27:L29)	Total:
31		=+H30/12			ft		
32							
33					NA		
34	1.302	=+I34*12	0.5		CD11-1	ARROW	

Subcontractor Calculation Review Checklist
DBVS OGTS Calculations

Subject: Off-Gas Treatment System Thermal Hydraulic Analysis

The subject document has been reviewed by the undersigned.
The checker reviewed and verified the following items as applicable.

Documents Reviewed: 145570-D-CA-061, Rev 0, OGTS Thermal Hydraulic Analysis

Analysis Performed By: AMEC/DMJM

- Design Input
- Basic Assumptions
- Approach/Design Methodology
- Consistency with item or document supported by the calculation
- Conclusion/Results Interpretation
- Impact on existing requirements
- _____

Checker (printed name, signature, and date)

Lois Payne L. L. Payne Lois L Payne 4/19/06

Organizational Manager (printed name, signature and date)

David H Shuford David H Shuford 4/20/06