This document was too large to scan as a single document. It has been divided into smaller sections.

Section 2 of 2

Document Information			
Document #	RPP-28538	Revision	1
Title	DST INTEGRITY ASSESSMENT REPORT HFFACO M-48-14		
Date	03/29/2006		
Originator	HUBER J	ORG CO	LATA, CH2M
Recipient		Recipient Co.	
References			
Keywords	PIPE, TRANSFER LINE, ENCASEMENT, CATHODIC PROTECTION, CORROSION, INSPECTION		
Projects			
Other Information			

APPENDIX E

VIDEO REVIEW NOTES

The following paragraphs present the raw video review notes from the IQRPE's API certified tank inspector. The notes provide recommendations that should be considered by future video assessment directors and report writers. Nomenclature such as "nozzle" in these notes should be taken to mean "riser."

AN Tank Farm

AN 101 Primary Tank Video #9394 (DVD 10539), Dated 7/17/2002
Review Completed 4/28/04 by gbj

The clarity and quantity of film taken during this inspection were found to meet the overall VT objectives. There were numerous areas of concern observed in the film. However, no audio or detailed written analysis was found.

Minutes: 10.00 thru 10.45, 12.30 Thru 20.00
Review of this film segment found indications that appear to be areas of corrosion with interconnecting pitting networks in circumferential bands on the shell. These bands of suspected corrosion are located at what appear to be historic liquid/vapor interfaces. There are innumerable bands with scale deposits and what appears to be associated wall loss due to pitting throughout the tank. These bands indicate a history of frequent changes in the liquid level over the life of the tank. In the film segments noted above, close-ups have been taken showing representative areas of concern. Similar indications are present in other film segments throughout the film.

Minutes 25.00 Thru26.30
Indication of corrosion pitting with interconnecting networks located in the Tank dome and haunch. These indications are located in the vapor phase of the tank where condensation has bled down from the tank dome into the knuckle leaving large connected pitted areas. Due to the configuration of the tanks, these damaged areas can only be inspected by UT in limited areas of the knuckle.

Recommendations:

Review UT scans if available for relevant data to correlate and quantify wall loss in areas identified. Where no UT data is available due to tank geometry or other access limitations, a risk analysis should be performed assessing probability and consequence of failure of the dome knuckle and nozzle components.

AN 101 Annulus Video #9409 Dated 4/15/92.
Review completed 4/28/04 by gbj

The clarity and quantity of film taken during this inspection were found to meet the overall VT objectives. Note that no audio or detailed written analysis of this inspection was found.

Minutes start to finish @ 1 hour 36 Minutes to end.
Annular tank shell courses have large areas of flaking and peeling mill scale, heavy to moderate in most places extending over 80 to 90% of the surface. It is most notable on the outside containment shell, number 1 shell course. There is a light yellow to white scale deposit present over large areas on the containment shell of an unknown origin. The film shows it starting at the top of the first shell course running down to the floor. There are similar deposits in rivers of laitance running from the top of the primary tank knuckle to the tank foundation pedestal. These deposits are believed to be related to concrete used in the original construction of the tank.

AN 101 Annulus Riser 40 Video #9616 Dated 12/03/01.
Review completed by gbj 3/13/05

The annulus primary and secondary shells are covered in light to moderate accumulations of gray mill scale, broken in areas with evidence of rust in those areas. Some minor isolated minor pitting has occurred where the mill scale is broken away. On the upper elevations of the tank there are laitance flow markings as observed elsewhere in the tank farm. On the lower shell courses there is an accumulation of white to yellow scale of an unknown origin, no leaks or damage was associated with this scale condition. The tank insulating concrete pedestal is in good condition, no damage was observed.

The film is approximately 50 minutes in length

AN 101 Annulus Riser 43 Video #9617 Dated 12/03/01.
Review completed by gbj 3/13/05

The annulus primary and secondary shells are covered in light to moderate accumulations of gray mill scale, broken in areas with evidence of rust in those areas. Some minor isolated pitting has occurred where the mill scale is broken away. On the upper elevations of the tank there are laitance flow markings as observed elsewhere in the tank farm. On the secondary tank shell, bottom shell courses, there is an accumulation of white to yellow scale of an unknown origin. This condition does not appear to have change since the inspection completed in 1992. The tank insulating concrete pedestal is in good condition, no damage was observed in this film segment.

The film is approximately 50 minutes in length, with good clarity and coverage of both primary and secondary shells from top to bottom.

AN 101 Annulus Riser 48 Video #9618 Dated 11/29/01.
Review completed by gbj 3/14/05

AN 101 Annulus Riser 45 Video #9518 & 9619 Dated 11/29/01.
Review completed by gbj 3/14/05

The primary tank walls are covered in a fractured, flaking mill like scale over 90% of the surface. This scale is gray with areas of staining and scale build up on the primary and containment shell plates. There are areas of rust where the mill scale has sloughed off (on both the primary and secondary shells) with moderate isolated and interconnected pitting in these areas, see photos below. No preferential corrosion of the welds or HAZ was noted. The riser extensions are full thickness, no appreciable thinning was observed. The haunch and bottom knuckle were found to be in good condition, no distortion, corrosion or other damage was observed. The insulating tank pedestal was found to be in good condition in this area, no damage was noted.

Video 0618 is approximately 60 minutes and #9619 is 45 minutes long, with good clarity throughout.

Secondary Tank Shell Corrosion

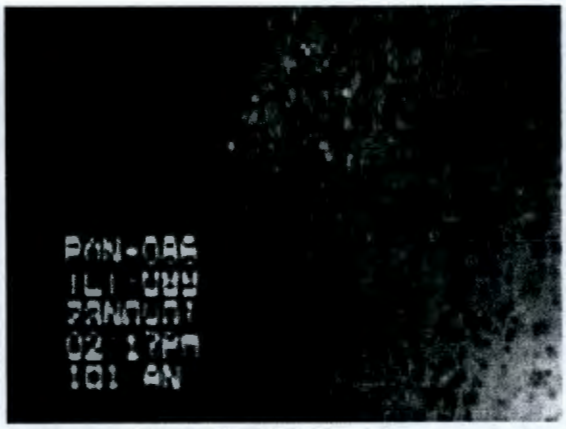

Primary Tank Shell Corrosion

Recommendations:

These corrosion indications should be monitored for change as a part of the ongoing inspection protocol. Base line wall thicknesses should be mapped in the areas of concern using AUT. Follow up inspection of these areas should be scheduled to determine the corrosion rates.

AN 102 Video Annulus # 9172, Dated 12/19/2001.
Review completed 4/29/04 by gbj

The clarity and quantity of film taken during this inspection were found to meet the overall VT objectives. There is a thorough audio narrative analysis on this film.

Minute Start to 1 hour 34 to end
There were no notable areas of immediate concern found on this film. Note that the film is accompanied with an audio narrative analysis of the conditions as found. This video is an example of how these automated VT inspections should be conducted and documented.

AN 102 Video Annulus # 9173, Dated 1/3/2002
Review completed 4/29/04 by gbj

Minute Start to 1 hour 44 minutes to end
There were no notable areas of concern found on this film. Conditions found were similar to those on Video #9172 described above.

Recommendations:

The annulus area of the tank should be monitored for change as a part of the ongoing inspection protocol.

AN 102 Video Primary # 9398, Dated
Review completed 4/29/04 by gbj

Minute Start to 1 hour .54 Minutes to end
Note: This film is marginal in quality due to graininess and flake-like image distortions.
It should also be noted that this tank is almost full of product and therefore only a portion of the upper shell course, knuckle and dome were visible in the film.

There is moderate to heavy scale build up on the internal surfaces. This scale/cake is light yellow to rust in color, covering approximately 80 to 90% of the tank surfaces.
No determination of the condition under this scale build up could be determined. However, the leading edges of the risers were visible in the vapor space. They appeared to be full dimension, no wasting or knife edge surfaces were noted.

Recommendations:

These conditions should be monitored for change as a part of the ongoing inspection protocol.

AN 102 Video Annulus # 9411, Dated 5/14/92
Review completed 4/30/04 by gbj

The clarity and quantity of film taken during this inspection were found to meet the overall VT objectives. There is a thorough audio narrative analysis on this film.

Minutes start to 1 hour 54 minutes end.
There were no notable areas of immediate concern found on this film.

Recommendations:

These conditions should be monitored for change as a part of the ongoing 5-year inspection interval.

AN 102 Video Annulus # 9412, Dated 5/12/92
Review completed 4/30/04 by gbj

The clarity and quantity of film taken during this inspection were found to meet the overall VT objectives. There is a thorough audio narrative analysis on this film.

Minutes start 1 hour 42 minutes end
There were no notable areas of immediate concern found on this film.

Recommendations:

These conditions should be monitored for change as a part of the ongoing inspection protocol.

AN 102 Video # 9186 Annulus Inspection
Review Completed 4/29/04 by gbj

The primary tank walls are covered in flaking scale over 90% of the surface. This scale is gray in color and maybe a result of the heat treating process. There are areas of staining and scale build up on both the primary and containment shell plates, some light areas of rust are also present. No pitting or preferential corrosion of the welds was noted. The riser extensions are full thickness, no appreciable thinning was observed. The haunch and bottom knuckle were found to be in good condition, no distortion, corrosion or other damage was observed.

Recommendations:

This area and conditions should be monitored for change as a part of the ongoing inspection protocol.

AN 103 Video #9400 Inspection Dated 8/8/02 & DVD 10191 Riser 21 Dated 8/2/02 of Primary Tank
Review completed by 5/12/04 and 2/21/06

Video # 9400

Film segment from 38 to 45 minutes, the following indications were found: What appear to be deep isolated and interconnected pitting networks observed in the haunch extending into the first shell plate and dome area. There was wasting of the circumferential weld area and HAZ. This most notable in the film segment 38.00 to 41.00 minutes.

1.04.06 Minutes - Severe interconnected pitting in the dome area extending down into the cir weld and HAZ with preferential corrosion in this area.

1.08.47 Minutes - Riser extension from dome area shows substantial corrosion wasting at edges. This is clear evidence of both pitting and general corrosion wasting.

1.13.54 Minutes - Dome top plate cir weld and HAZ, pitting networks running with cir weld.

1.16.28 Minutes - Large diameter Riser extension, evidence of wasting at attachment weld, preferentially corroded in weld and HAZ, approximately 90% of weld / HAZ effected.

1.19.24 Minutes - Dome Riser extension, evidence of preferential weld and HAZ corrosion, stains around riser extension from leaking.

1.20.45 End of film.

DVD #10191

This film confirmed the findings as noted above. In that the dates of these inspections are within a few days of one another, it maybe that they are, in fact, one and the same. The DVD numbering system is not correlated with the video numbering system.

Recommendations:

These areas of concern should be monitored for change as a part of the ongoing inspection protocol. Base line wall thicknesses should be mapped in the areas of concern using AUT. Follow up inspection of these areas should be scheduled to determine the corrosion rates.

AN 103 Video #9175 Inspection Dated 1/8/02 of Annulus Tank
Review completed by gbj 10/07/04

The primary tank walls (as viewed from within the annulus) are covered in a fractured, flaking mill like scale over 90% of the surface. This scale is gray in color and maybe a result of the heat treating process. There are areas of staining and scale build up on both the primary and containment shell plates, some light areas of rust are also present. No pitting or preferential corrosion of the welds was noted. The riser extensions are full thickness, no appreciable thinning was observed. The haunch and bottom knuckle were found to be in good condition, no distortion, corrosion or other damage was observed.

Film is 1 hr 22minutes.

Recommendations:

This area and conditions should be monitored for change as a part of the ongoing inspection protocol.

AN 103 Video #9174, Risers 40 & 44. Inspection Dated 1/8/02 of Annulus Tank
Review completed by gbj 10/07/04

Conditions found from these nozzles were similar to those viewed in film #9175 above.
No notable concerns were observed in these film segments.

AN 103 Video #10013 (also noted as #1457). Inspection Dated 1/19/95 of Primary Tank
Review completed by gbj 10/07/04

At the time of this filming the tank was filled to approximately ¾ way up on the second shell course. The observable areas are covered in what appears to be a thin scale of iron oxide. Only one unidentified nozzle was clearly viewed, it was thinned on the extension pasted the dome attachment weld. No pitting, preferential corrosion to the weldments, or other mechanical damage was observed.

Recommendations:

This area and conditions should be monitored for change as a part of the ongoing inspection protocol.

AN 103 Video #9413 Inspection Dated 5/07/92 of Annulus Tank
Review completed by gbj 10/08/04

Note: This tape contains annulus inspections of AN-103 and AN-102 according to the title blocks on the film. This appears to be corrected titled. AN-103 is reviewed as following:

The primary tank walls (as viewed from within the annulus) are covered in a fractured, flaking gray scale as noted in other areas in the annulus. There are areas of staining and scale build up on both the primary and containment shell plates, some light to moderate areas of rust present, most notable on the secondary shell walls. No pitting or preferential corrosion of the welds was noted. The riser extensions observed are full thickness, no appreciable thinning was observed. The haunch and bottom knuckle were found to be in good condition, no distortion, corrosion or other damage was found.

Recommendations:

This area and conditions should be monitored for change as a part of the ongoing inspection protocol.

AN 103 Video #9414 Riser 17A, Inspection Dated 5/12/92 of Annulus Tank
Review completed by gbj 10/08/04

The primary tank walls within the annulus are covered in a moderate to heavy gray mill scale. Where the mill scale has fractured exposing the plate, there is pitting and rust accumulation. This condition is similar to other tanks in the AN tank farm. The floor of the annulus is covered in a dusting of corrosion product which has sloughed off. The secondary shell and haunch are similarly affected, with areas of heavy accumulations of light colored scale in some areas, the source of which is unknown.

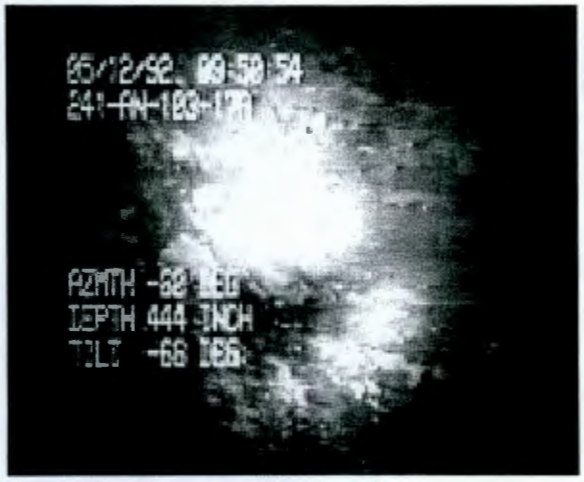

Annulus Primary Shell wall

Annulus Secondary Shell

An 103 Video #9175 Risers 42 & 49 Inspection Dated 1/8/02
Review completed by gbj 3/13/05

Riser 42 appears first on the film, approximately 35 minutes long. The conditions found are reflective of those found in the inspection of the adjacent area, Riser 17A in 1992. The primary tank walls are covered in a moderate to heavy gray mill scale. The mill scale has fractured and sloughed off exposing the shell plate to the atmosphere. There is minor pitting and rust accumulation in these exposed areas. Similar conditions were found in the inspection conducted from Riser 49.

The floor of the annulus is covered in a dusting of corrosion product which has sloughed off. The secondary shell and haunch are similarly affected, with areas of heavy accumulations of light colored scale in some areas, the source of which is unknown.

Recommendations:

This area and conditions should be monitored for change as a part of the ongoing inspection protocol.

AN 104 Video #9415 Riser 17H, Inspection Dated 4/24/92 of Annulus Tank
Review completed by gbj 10/08/04

The annulus primary tank walls are covered in a fractured, flaking gray scale as noted in other areas in the annulus. There are areas of staining and scale build up on the primary and secondary containment shell plates. There are areas of light to moderate rust present, most notable on the secondary shell walls. No pitting or preferential corrosion of the welds was noted. The riser extensions observed are full thickness, no appreciable thinning was observed.

Film 10:00 to approximately 12:00

There is an area of corrosion interconnected pitting and presence of corrosion product and surface staining (which maybe an indication of a through wall leak) on the secondary shell haunch. This area was well documented with this film segment, however, no follow up film was taken of this area of concern during the subsequent January 2002 inspection.

Secondary Haunch Indication

Recommendations:

The area of concern as noted above should be monitored for change as a part of the ongoing inspection protocol. Particular effort should be made to reexamine the indications found on the secondary haunch.

AN 104 Video #8861 Riser 17B, Inspection Dated 4/22/92 of Annulus Tank
Review completed by gbj 10/15/04

The conditions found in this area of the annulus are as described above under An 104 Video #9415.

AN 104 Video #9392 Risers 45 & 49, Inspection Dated 1/10/02 of Annulus Tank
Review completed by gbj 10/15/04

The annulus primary and secondary shells are covered in light to moderate accumulations of gray mill scale, broken in areas with evidence of rust in those areas. There are several areas portrayed in this film where isolated pitting has occurred where the mill scale is broken away. Based on the amount of corrosion product associated with these pits they are assumed to be superficial.

The film ends at 1 hr 16 minutes.

Recommendations:

This area and conditions should be monitored for change as a part of the ongoing inspection protocol.

AN 104 Video #9176 Risers 40 & 42, Inspection Dated 1/10/02 of Annulus Tank
Review completed by gbj 10/15/04

The conditions found in this area of the annulus are as described above under AN-104 Video #9392.

Film duration 1 hour 42 minutes

AN 104 Video #8862 Riser 21 Inspection Dated 8/09/02 of Primary Tank
Review completed by gbj 10/16/04

At the time of this filming the tank was filled to within approximately 4 to 6 feet of the knuckle attachment weld. The observable areas (above the product level line) are covered in what appears to be heavy white to rust colored product scale, no determination of the condition of the shell wall could be made due to the amount of product debris/scaling. The vapor space above the tank knuckle is covered in a moderate to heavy rust colored scale with areas that appear to be corrosion pitting. The riser extensions viewed appear to be full strength, no wasting or knife edged surfaces where noted. The weld joint reinforcement appears to have been degraded/wasted, relative to other tanks of similar construction, however, no historical evidence of film was found to confirm this conclusion.

There is a band of thick white loosely adhering scale above the existing product level.
The exposed tank shell metal as seen in this area appears to be bright metal, an indication of an active corrosive environment. Although portions of this area have been inspected with AUT, the corrosion mentioned here have yet to be found.

Tank Shell, stored product accumulation

Recommendations:

This area and conditions should be monitored for change as a part of the ongoing inspection protocol. An effort should be made to correlate AUT data and the indications noted above the product level during the next annulus inspection.

AN 105 Video #9416 & 9417 Risers 17 D and 17 K Inspection Date 4/27/92
Review completed by gbj 2/15/05

These video films cover tow adjacent areas of the tank annulus. The conditions found are the same.

The annulus primary and secondary shells are covered in light to moderate accumulations of gray mill scale, broken in areas with evidence of rust in those areas. There are several areas portrayed in this film where isolated pitting has occurred where the mill scale is broken away. Based on the amount of corrosion product associated with these pits they are assumed to be superficial.

The film #9416 runs 1 hr 30 minutes and #9417 1 hr 37 minutes.

Recommendations:

This area and conditions should be monitored for change as a part of the ongoing inspection protocol.

AN 105 Video #9125 Knuckle Scan Inspection Date 2/16/99
Review completed by gbj 3/10/05

This film was reviewed for AUT inspection technique procedure. The film demonstrates the UT inspection of the Primary Tank lower knuckle. The film clearly shows the scanning devise able to travel around the knuckle geometry without loosing contact with the tank knuckle.

AN 105 Video #9121 Floor Scan Inspection Date 3/1/99
Review completed by gbj 3/10/05

This film was reviewed for AUT inspection technique procedure. The film demonstrates the AUT inspection of the annulus floor plate. The film clearly shows the scanning devise able to travel the geometry of the tank floor without loosing contact.

AN 105 Video #9118 Horizontal Pass#2 Plate Inspection Date 1/25/99
Review completed by gbj 3/10/05

This film was reviewed for AUT inspection technique procedure. The film demonstrates the UT inspection of the Primary Tank shell. The film clearly shows the scanning devise able to travel around the tank shell geometry without loosing contact with the tank surface.

AN 105 Video #9110 Horiz Vent weld inspection Date 1/12/99
Review completed by gbj 3/11/05

The description is marked on the film case as "Horizontal Vent Weld Inspection."
This description is somewhat misleading in that the UT scanner is scanning vertically on what appears to be the tank bottom knuckle. The weld, shell to knuckle, is not being scanned from what can be determined from the film.

This said, the film demonstrates the UT inspection of the Primary Tank lower knuckle well, but, not the ability to inspect the weld area with reinforcement.

AN 105 Video #9103 Tank Annulus Inspection Date 12/13/98
Review completed by gbj 3/11/05

This film was reviewed for AUT inspection technique procedure. The film demonstrates the UT inspection of the Primary Tank shell. The film clearly shows the scanning devise able to travel around the tank shell geometry without loosing contact to the surface.

105 Video #9129 Wall Scan Inspection Date 3/1/99
Review completed by AN gbj 3/12/05

Attempts to review this film found no image on cassette. Note found in film case noted same.

105 Video #9135 Horiz. Scan Plates 2 & 3 Inspection Date 3/1/99
Review completed by AN gbj 3/12/05

This film was reviewed for AUT inspection technique procedure. The film demonstrates the UT inspection of the Primary Tank shell. The film clearly shows the scanning devise able to travel around the tank shell geometry without loosing contact to the surface.

Recommendations:

These scanned areas should be mapped and rescanned as a part of the ongoing tank inspection protocol.

AN 105 Video #10851 Inspection Dated 1/12/06 Primary tank, Riser 15
Review completed 3/9/06 by gbj

The inspection film is of good clarity and covers in adequate detail the tank exposed shell, dome and internal components. The tank was filled to capacity at the time of inspection, thus, very little of the shell wall was visible.

The vapor space, including the haunch, dome plate and nozzles and nozzle extensions were found to be covered in moderate to heavy rust like corrosion product. The weld attachments are preferentially corroded leaving little or no weld re-enforcement. This damage extends into the HAZ where pitting and general wasting is extensive.

What could be seen of the tank shell was covered with isolated pitting and rust scale. The welds to the shell and haunch appear to be in serviceable condition. No other assessment of this area could be made due to the high level of stored product.

AN 106 Video #9177 Risers 40 and 43 Inspection Date 1/09/02
Review completed by gbj 2/15/05

The annulus primary and secondary shells are covered in light to moderate accumulations of gray mill scale, broken in areas with evidence of rust in those areas. Some minor isolated minor pitting has occurred where the mill scale is broken away. Based on the amount of corrosion product associated with these pits they are assumed to be superficial. On the upper elevations of the tank there are laitance flow markings as observed elsewhere in the tank farm. The tank insulating concrete pedestal is in good condition, no damage was observed.

The film runs 1 hr 37 minutes.

AN 106 Video #9481Riser 17C Inspection Date 5/20/92
Review completed by gbj 3/9/05

This film was reviewed to determine baseline condition in the annulus. The annulus primary and secondary shells are covered in light to moderate accumulations of gray mill scale, broken in areas with evidence of rust in those areas. Minor pitting has occurred where the mill scale is broken away. Based on the amount of corrosion product associated with these pits they are assumed to be superficial. On the upper elevations of the tank there is laitance flow marking as

observed elsewhere in the tank farm. The tank insulating concrete pedestal is in good condition, no damage was observed.

Recommendations:

This area and conditions should be monitored for change as a part of the ongoing inspection protocol.

AN 106 UT Test Video # 9141 Dated 6/9/99 Annulus Primary Tank Inspection
Review completed by gbj 3/9/05

This film is of AUT in progress on the annulus side of the primary tank. The film is a good depiction of this inspection procedure, with footage showing the scan travel and water couplent flow. No concerns were noted.

AN 106 Video #10854 Inspection Dated 7/29/02 of Tank Annulus, Risers 82 & 83
Review completed 3/9/06 by gbj

The inspection film is of good clarity and covers in adequate detail the tank annulus components, both primary and secondary containment.

The annulus primary tank is covered in a light to moderate rust and mill scale. There are areas of scattered and interconnected pitting networks on most of the surfaces observed in this film sequence, these networks are considered to be superficial, although absolute determination of the their severity could be made. These networks are most notable on the upper portion of the tank shell and knuckle. There are typical construction writing and marking artifacts throughout the tank. The bottom shell and knuckle appear to be in like condition but with less evidence of scale and interconnected pitting networks. The tank pedestal appears to be in good condition, no notable damage or other concerns were observed.

The secondary tank shell is covered in heavy deposit of light colored scale and rust like corrosion deposit. The floor of the annulus is covered in loose scale that has fallen from the tank shell and accumulated over time. There are areas of staining that suggest that water has been present on the floor of the annulus at one time. That said, none was found to be present at the time of this inspection.

AN 107 Video #9419 Riser 21 Inspection Dated 5/21/92 of Annulus Tank
Review completed by gbj 6/8/04

The primary tank walls are covered in moderately heavy flaking gray mill scale. There are large areas of rust where the mill scale has sloughed off on both the primary and secondary shells and

knuckles. No pitting or preferential corrosion was observed. The riser extensions observed were full thickness. The bottom knuckle is in satisfactory condition, no concerns were note.

AN 107 Video #9484 Risers 40 & 43 Inspection Dated 9/10/02 of Annulus Tank
Review completed by gbj 3/8/05

The primary tank walls are covered in moderately heavy flaking gray mill scale. There are large areas of rust where the mill scale has sloughed off on both the primary and secondary shells and knuckles. An area noted in the 1992 inspection from (Riser #40, see photo below) on the secondary tank wall near the haunch was revisited. This appears to be scale only, no pitting or preferential corrosion was observed. The riser extensions observed were full thickness.
The bottom knuckle is in satisfactory condition, no concerns were note.

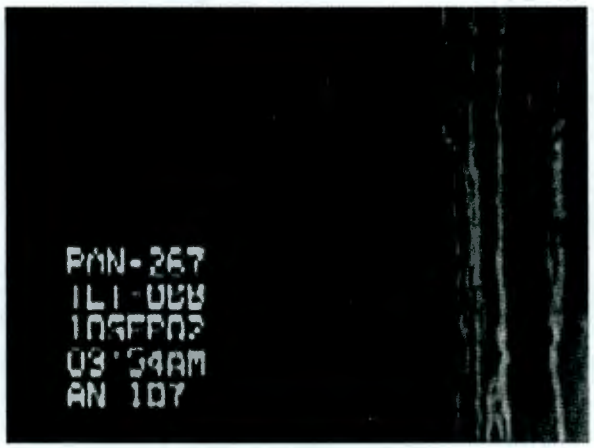

AN 107 Video #9485 Risers 46 & 49 Inspection Dated 9/10/02 of Annulus Tank
Review completed by gbj 3/8/05

The primary tank walls are covered in moderately heavy flaking gray mill scale. There are areas of moderate to heavy accumulations of laitance flow on the top knuckle. There are large areas of rust where the mill scale has sloughed off on both the primary and secondary shells and knuckles. Minor pitting like indications was found on the primary tank. There were no indications of preferential corrosion found. The riser extensions observed were full thickness. The bottom knuckle is in satisfactory condition, no concerns were noted.

Recommendations:

This area and conditions should be monitored for change as a part of the ongoing inspection protocol.

AN 107 Video #9620 Riser 22 Inspection Dated 1/29/02 of Primary Tank
Review completed by gbj 10/25/04

This film is of lower than average clarity, it appears that the atmosphere in the tank was warm relative to the outdoor temperature (January). The camera lens was initially covered in condensation. This seems to have improved over the course of the inspection.

At the time of inspection, the tank appears to be about ¾ full. There are areas of white stored product scale, light to moderate accumulations, on the shell walls up to the knuckle attachment weld. The knuckle and dome are covered in moderate to heavy rust scale, with signs of corrosion throughout the vapor space. The weld attachments and HAZ are preferentially corroded with interconnected pitting networks.

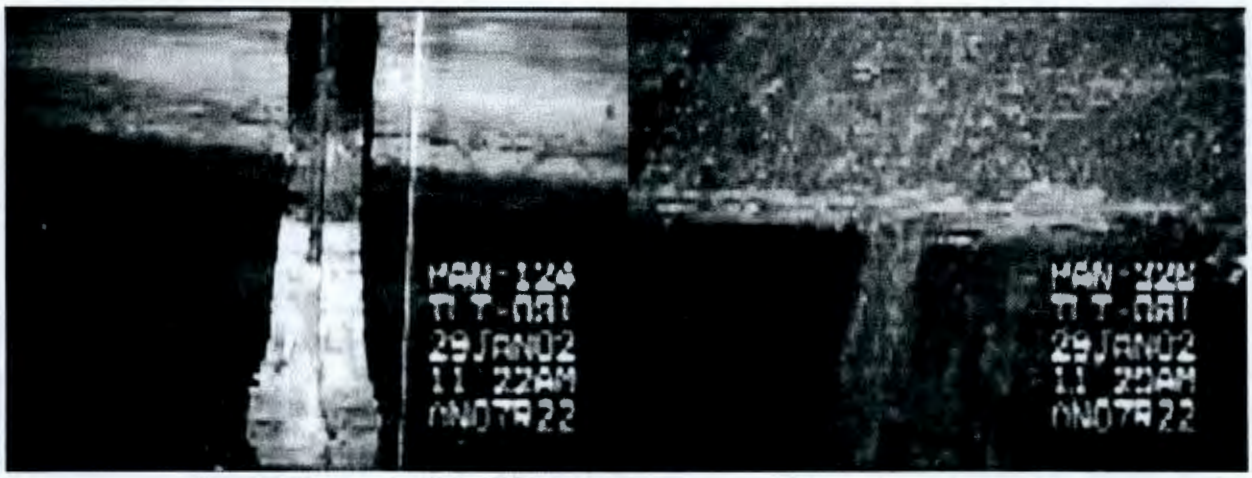

Product accumulation on internal components and preferential corrosion on dome attachment welds and in HAZ.

Recommendations:

This area and conditions should be monitored for change as a part of the ongoing inspection protocol. An effort should be made to correlate AUT data and the indications noted above the product level during the next annulus inspection.

AP Tank Farm

AP 101 Video #9508 Inspection Dated 10/3/02 of Primary Tank
Review completed by gbj 5/12/04

Tank interior shell walls are generally free of scale or corrosion deposits. There are no areas of wasting or deterioration noted on the internal components. There is a light scale accumulation on the tank dome and haunch. The Riser extensions are full thickness, no wasting or knife edging was observed.

AP 101 Video #9422 Inspection Dated 2/10/92 of Tank Annulus
Review completed by gbj 5/12/04

Film segment beginning at 28.00.00 to end 37.24.00. This was a limited inspection of a small portion of the tank annulus area. No areas of concern were noted in this film segment.

AP 101 Video #9421 Inspection Dated 2/11/92 of Tank Annulus
Review completed by gbj 3/19/05

Film shows primary and secondary shell walls with accumulations of scale and patches of rust. Both circumferential and long welds have been recently abrasively cleaned in the HAZ, presumably for UT inspection. The primary shell walls have rivers of dried couplent flows across large areas.

No significant corrosion pitting, or other damage was noted on in this area of the tank. Film was viewed to 35 Minutes, end of recording.

AP 101 Video Riser 31 #9622 Inspection Dated 10/15/02 of Tank Annulus
Review completed by gbj 2/15/05

There is a unusual construction paper artifact duck taped to the primary tank knuckle. This may date back to the original construction of the tank. It is of no concern and is only noted here in review of the film.

Film shows primary and secondary shell walls with accumulations of scale and patches of rust. Both circumferential and long welds have been recently abrasively cleaned in the HAZ, presumably for UT inspection. The primary shell walls have rivers of dried couplent flows across large areas.

No significant corrosion pitting, or other damage was noted on in this area of the tank. Film was viewed to 35 Minutes, end of recording.

Recommendations:

This area of the tank should be monitored for change as a part of the ongoing inspection protocol including but not limited to AUT and Visual (video). An effort should be made to establish a corrosion rate.

AP 101 Video #10270 Inspection Dated 10/3/02 of Primary Tank
Review completed by gbj 3/6/06

This inspection film is of good clarity and covers in satisfactory detail the Primary Tank components.

The tank shell, dome and internal appurtenance are free of scale or corrosion deposits. There is only a light rust bloom, no residual product adhering to the exposed shell walls. There was no evidence of corrosion or other damage noted. The Riser extensions were panned in on, they all appeared to be full thickness, no wasting or knife edging was observed.

Recommendations:

This tank should be monitored for change as a part of the ongoing inspection protocol including but not limited to AUT and Visual (video). An effort should be made to establish a corrosion rate.

AP 101 Video #10867 Inspection Dated 8/30/05 of Tank Annulus, Risers 46, 57 & 49
Review completed by gbj 3/5/06.

This inspection film is of good clarity and covers in good detail the tank annulus components, both primary and secondary containment.

This film and the conditions found are consistent with those found in the above description of #10868. The only exception to this is an area of pronounced surface rust like scale on the secondary tank. This is believed to be surface roughness only and is not an active corrosion site.

AP 101 Video #10868 Inspection Dated 12/29/05 of Tank Annulus, Riser 54
Review completed by gbj 3/4/06

The inspection film is of good clarity and covers in good detail the tank annulus components, both primary and secondary containment.

There is typical of this construction and service rust and mill scale and debris on the tank shell, knuckle and other annulus component surfaces. There is notably on the primary tank shell, stains, evidence of application of couplent used in UT inspection of the circumferential welds.

Numerous other construction markings remain on the tank surfaces; this would seem to indicate that little or no general wasting corrosion has occurred. The tank pedestal and floor slots appear to be in as constructed condition, no leakage or deterioration was noted.

AP 102 Video #9210 Inspection Dated 4/1/02 of Primary Tank
Review completed by gbj 5/13/04

First minute of film: Note that as the camera was passed through Riser #1 it was noted that there were pitting networks within the nozzle bore. The vapor phase of this tank has been subjected to a prolonged corrosive atmosphere. Large areas of corrosion product are present on the shell course, haunch, dome and nozzles.

Film segment 3.50.00 to 7.00.00 minutes - There is light to moderate white scale accumulation on the tank shell, knuckle and dome. There are areas of spalling of scale near what was the liquid level and knuckle to shell areas. There is a band of spalling approximately 3 feet wide in this area with what appears to be preferential corrosion of the knuckle to shell weld metal. It could not be determined whether the spalled areas had experienced actual metal loss in or just sloughed accumulated product scale.

Film segment 7.00.00 to 9.16.00 minutes - The knuckle to dome attachment weld appears to be preferentially corroded with isolated and connected pits in the weld joint. Several Riser extensions in this segment show evidences of wasting and pitting. This corrosion attack maybe general wall loss within the vapor space area, however, this could not be determined from the film.

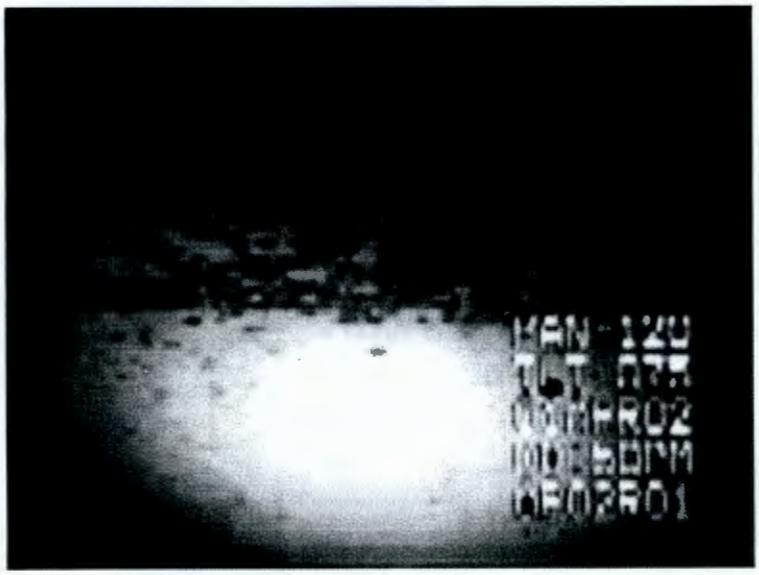

Film segment 10.20.00 to - This segment (see photo above) of the film shows what appears to be preferential corrosion of the weldment and HAZ in the dome attachment welds and HAZ. There are areas of what appear to be severe corrosion in some of these areas that are well depicted, see film segments 12.00.00 through 14.30.00 minutes.

Film ends at 15.15.00 Minutes.

Recommendations:

These conditions should be monitored for change as a part of the ongoing inspection protocol. Existing AUT data should be examined to confirm areas of noted concern. An effort should be made to establish a corrosion rate based on first opportunity to re inspect these areas.

AP 102 Video #10646 Inspection Dated 11/24/04 of Tank Annulus, Risers 46 & 49 Primary Tank Inspection dated 1/18/05, Riser 54 &57
Review completed by gbj 3/5/06

The inspection film is of good clarity and covers in good detail the tank annulus components, both primary and secondary containment.

There is typical of this construction and service rust and mill scale and debris on the tank shell, knuckle and other annulus component surfaces. There is notably on the primary tank shell, stains, evidence of application of couplent used in UT inspection of the circumferential welds. Numerous other construction markings remain on the tank surfaces; this would seem to indicate that little or no general wasting corrosion has occurred. The tank pedestal and floor slots appear to be in as constructed condition.

In this film sequence on the annulus floor, there is an area of what appears to be a wet or stained area. The source could not be determined, although it does not appear to be leakage from the primary tank.

No areas of reportable corrosion or other damage was found in the review of this film.

AP 102 Video #10863 Inspection Dated 2/1/06 of Primary Tank, Risers 28
Review completed by gbj 3/5/06.

This inspection film is of good clarity and covers in good detail the Primary Tank components.

The tank dome and riser extensions are covered with a tightly adhering white scale, only broken in small widely space areas. The internal appurtenance are generally free of scale or corrosion deposits. There is only a light rust bloom, no residual product adhering to the exposed shell walls. There was no evidence of corrosion or other damage noted. The Riser extensions were panned in on, they all appeared to be full thickness, no wasting or knife edging was observed.

AP 103 Video #8497 Inspection Dated 4/1/98 of Primary Tank
Review completed by gbj 5/13/04

This tape is without meaningful image. It was intended to record sampling process from Riser #3.

AP 103 Video #9425 Inspection Dated 2/27/92 Tank Annulus
Review completed by gbj 5/13/04

Film shows primary and secondary shell walls with accumulations of scale and patches of rust. Both circumferential and long welds have been recently abrasively cleaned in the HAZ, presumably for UT inspection. The primary shell walls have rivers of dried couplent flows across large areas.

No significant corrosion pitting, or other damage was noted on in this area of the tank. Film was viewed to 1.35 Minutes, end of recording.

Recommendations:

These conditions should be monitored for change as a part of the ongoing 5 year inspection interval.

AP 103 Video #9426 Inspection Dated 2/19/92 Tank Annulus
Review completed by gbj 5/13/04

Film shows annulus area in similar condition to that of film #9425. The primary and secondary shell walls with accumulations of scale and patches of rust. Both circumferential and long welds have been recently abrasively cleaned in the HAZ, presumably for UT inspection. The primary shell walls have rivers of dried couplent flows across large areas.

No significant corrosion pitting, or other damage was noted on in this area of the tank. Film was viewed to 1.17 Minutes.

Recommendations:

These conditions should be monitored for change as a part of the ongoing inspection protocol.

AP 103 Video #10864 Inspection Dated 2/2/06 of Primary Tank, Risers 27
Review completed by gbj 3/5/06

This inspection film is of good clarity and covers in good detail the Primary Tank components.

The tank dome and riser extensions are covered with a tightly adhering white scale, only broken in small widely space areas. The internal appurtenances are generally free of scale or corrosion deposits. There is only a light rust bloom, no residual product adhering to the exposed shell walls. There was no evidence of corrosion or other damage noted. The Riser extensions were panned in on, they all appeared to be full thickness, no wasting or knife edging was observed.

AP 103 Video #10870 Inspection Dated 8/31/05 of Tank Annulus, Risers 46,49,57 & 54
Review completed by gbj 3/5/06

The inspection film is of good clarity and covers in good detail the tank annulus components, both primary and secondary containment.

There is typical of this construction and service rust and mill scale and debris on the tank shell, knuckle and other annulus component surfaces. There is notably on the primary tank shell, stains, evidence of application of couplent used in UT inspection of the circumferential welds. Numerous other construction markings remain on the tank surfaces; this would seem to indicate that little or no general wasting corrosion has occurred. The tank pedestal and floor slots appear to be in as constructed condition.

No areas of reportable corrosion or other damage was found in the review of this film.

AP 104 Video #9427 Tank Annulus Inspection Dated 2/25/92
Review completed by gbj 6/22/04

This inspection was conducted from Riser 17, the image clarity is good, consistent with the film of this period. No irregularities of immediate concern were found.

The annulus primary shell is covered with light to moderate mill scale, rust and other corrosion product. Surface roughness is most notable on the 1st shell course of the primary shell near the haunch. It appears that there was a extended period where annulus area was not adequately ventilated, allowing an atmosphere of highly humid stagnate air to exist. There are numerous paint markings on the tank as a result of original construction. Some circumferential welds have been abrasively cleaned in HAZ areas for UT inspection. There are rivers of concrete laitance or splatter running down the primary tank from the dome and knuckle area. Observed internal piping appears to be sound, no concerns were noted.

1 hour 27 minutes into the film, heavy mill scale fractures were noted on primary tank shell. These indications are viewed as being superficial, with no measurable wall loss associated with them.

The film was reviewed to the end at 1 hr 46 minutes.

Recommendations:

These conditions should be monitored for change as a part of the ongoing inspection protocol. Existing AUT data should be examined to confirm areas of noted concern. An effort should be made to establish a corrosion rate based on first opportunity to re-inspect these areas.

AP 104 Video #10038 Primary Tank Inspection Dated 7/15/97
Review completed by gbj 6/22/04

The Primary Tank inspection was conducted from Riser 24. The film clarity is good. Areas of interest are zeroed in on with appropriate close-ups and hold time.

The Primary Tank interior is generally free of scale or other debris. There is a light rust bloom on the shell walls along with a very light accumulation product residue. There is an area of significant corrosion concern located in or near the circumferential weld between the first and second shell courses. The indication of concern appears to be a deep horizontal run of interconnected pitting estimated to be between 4 to 5 feet in length. No estimate of the depth could be made. The condition appears in several locations at slightly different elevations and locations throughout circumference of the tank. The as described are seen from various vantage points throughout the duration of the film.

Recommendations:

These conditions should be monitored for change as a part of the ongoing inspection interval.

AP 104 Video #10643 Inspection Dated 10/20/04 of Primary Tank, Risers 45 & 48
Review completed by gbj 3/5/06

This inspection was conducted from Risers 49 then 47; the image clarity is good, consistent with the best technology available at this time.

The annulus primary shell is covered with light to moderate mill scale, rust and other corrosion product. Surface roughness is most notable on the 1st shell course of the primary shell near the haunch. It appears that there was a extended period where annulus area was not adequately ventilated, allowing an atmosphere of highly humid stagnate air to exist. There are numerous paint markings on the tank as a result of original construction. Some circumferential welds have been abrasively cleaned in HAZ areas for UT or MT inspection. There are rivers of concrete laitance or splatter running down the primary tank from the dome and knuckle area. Observed internal piping appears to be sound, no concerns were noted.

There is what appears to be an accumulation of thick damp sludge, rust in color on the floor of the annulus. No definitive determination could be made as to its source.

AP 104 Video #10644 Inspection Dated 10/20/04 of Primary Tank, Risers 49 &47
Review completed by gbj 3/5/06

This inspection was conducted from Risers 49 then 47; the image clarity is good, consistent with the best technology available at this time.

The annulus primary shell is covered with light to moderate mill scale, rust and other corrosion product. Surface roughness is most notable on the 1st shell course of the primary shell near the haunch. It appears that there was a extended period where annulus area was not adequately ventilated, allowing an atmosphere of highly humid stagnate air to exist. There are numerous paint markings on the tank as a result of original construction. Some circumferential welds have been abrasively cleaned in HAZ areas for UT or MT inspection. There are rivers of concrete laitance or splatter running down the primary tank from the dome and knuckle area. Observed internal piping appears to be sound, no concerns were noted.

There is what appears to be an accumulation of thick damp sludge, rust in color on the floor of the annulus. No definitive determination could be made as to its source.

AP 104 Video #10647 Inspection Dated 1/21/05 of Tank Annulus, Risers 46 & 54
Review completed by gbj 3/5/06

This inspection was conducted from Riser 46 then 54; the image clarity is good, consistent with the best technology available at this time.

The annulus primary shell is covered with light to moderate mill scale, rust and other corrosion product. Surface roughness is most notable on the 1st shell course of the primary shell near the haunch. It appears that there was a extended period where annulus area was not adequately ventilated, allowing an atmosphere of highly humid stagnate air to exist. There are numerous paint markings on the tank as a result of original construction. Some circumferential welds have been abrasively cleaned in HAZ areas for UT or MT inspection. There are rivers of concrete laitance or splatter running down the primary tank from the dome and knuckle area. Observed internal piping appears to be sound, no concerns were noted.

There is what appears to be an accumulation of liquid, presumably water on the floor of the annulus, in the same area as where the sludge was reported in the review report from the 2004 inspection. This does not appear to be leakage from the tank, however, no definitive determination could be made as to its source.

AP 104 Video #10865 Inspection Dated 1/31/06 of Primary Tank, Risers 28
Review completed by gbj 3/5/06

The Primary Tank inspection was conducted from Riser 28. The film clarity is good. Areas of interest on the tank shell are zeroed in on with some close-ups and hold times but not adequate to fully assess areas of concern found in previous inspections.

The Primary Tank interior is generally free of scale or other debris. There is a light rust bloom on the shell walls along with a very light accumulation product residue. There is what appears to be preferential corrosion in the dome attachment welds, both in the welds and HAZ.

There is an area of significant corrosion concern located in or near the circumferential weld on the first shell course. This concern, along with concerns with the weld to the second shell course was found and reported earlier inspection. Note that the product elevation in the tank been raised and has covered up some of the areas previously reported as concerns. The indication of concern appears to be a deep horizontal run of interconnected pitting estimated to be between 4 to 5 feet in length. No estimate of the depth could be made. The condition appears in several locations at slightly different elevations and locations throughout circumference of the tank.

AP 104 DVD Upper Dome UT Inspection dated 2/9/05. No number was assigned to this film.
Review completed by gbj 3/20/05.

This film depicts the UT scan of the dome area VT inspection of the dome taken from the annular are. No areas of concern were noted during the course of reviewing the film. Only light to moderate rust and scale were found on the viewed surfaces. No preferential corrosion was found.

241 AP 105 Video #9429 Annulus Tank Inspection Dated 2/28/92 and 241 AP 105 Video #9428 Annulus Tank Inspection Dated 2/27/92
Review completed by gbj 6/22/04

This video image was clear, consistent with the quality of film from this period. No immediate concern or irregularities were noted.

The annulus primary shell is covered with light to moderate rust and mill scale, typical of these tanks. The heaviest accumulations were found on the upper shell course, primary tank side, near the haunch. As is the case with other tanks in this area, it appears that there was a extended period where annulus area was not sufficiently ventilated, allowing an atmosphere of highly humid and stagnate air to exist. There are numerous paint markings on the tank as a result of original construction. There are typical to these tanks rivers of concrete laitance or splatter running down the primary tank from the dome and knuckle area. The internal piping appears to be sound and well supported, no concerns were noted.

The film #10038 was reviewed to the end at 1 hr 40 minutes. Video film 9428 was reviewed from start to finish, 1 hr 38 minutes.

Recommendations:

The conditions found should be monitored for change as a part of the ongoing 5 year inspection interval. An attempt should be made to quantify the any associated damage where possible.

AP 105 Video #10858 Inspection Dated 1/24/06 of Primary Tank, Risers 26
Review completed by gbj 3/5/06

The Primary Tank inspection was conducted from Riser 26. The film clarity is good. Areas of interest are zeroed in on with appropriate close-ups and hold time.

The Primary Tank interior is generally free of scale or other debris. There is a light rust bloom on the shell walls along with a very light accumulation product residue. There is an area of light to moderate corrosion located in or near the circumferential weld between the top knuckle and first shell courses. The tank dome is covered in a light tightly adhering scale, white in color, with widely space small broken areas exposing the underlying metal.

Note that only the vapor space was observable in this film sequence due to the high level of product stored in the tank. In the observable areas no reportable concerns corrosion or other damage of any magnitude were found.

AP 105 Video #10866 Inspection Dated 1/9/06 of Tank Annulus, Risers 57 & 54 Inspection Dated 1/10/06 of Tank Annulus Risers 46 & 49
Review completed by gbj 3/5/06

The inspection film is of good clarity and covers in good detail the tank annulus components, both primary and secondary containment.

There is typical of this construction and service rust and mill scale and debris on the tank shell, knuckle and other annulus component surfaces. There is notably on the primary tank shell, stains, and evidence of application of couplent used in UT inspection of the circumferential welds. Numerous other construction markings remain on the tank surfaces; this would seem to indicate that little or no general wasting corrosion has occurred. The tank pedestal and floor slots appear to be in as constructed condition.

No areas of reportable corrosion or other damage was found in the review of this film.

AP 106 Video #9430 Tank Annulus Inspection Dated 3/2/92
Review completed by gbj 6/23/04

This inspection was conducted from Riser 17, the image clarity is good, consistent with the film of this period. No irregularities of immediate concern were observed.

The annulus primary and secondary shells are covered with light to moderate mill scale, rust and other corrosion product scale. Scale and underlying metal roughness are present on both shell surfaces throughout the annulus area. It appears that the annulus area was subjected to a

prolonged period of high humidity due to nonfunctioning or an inadequately functioning ventilation system, typical of these tanks.

Some minor sloughing of the insulating grout pedestal was observed in the slots below the knuckle.

Film was reviewed from start to 1 hr 14 minutes.

Recommendations:

Annulus ventilation systems should be monitored on scheduled bases to insure operational objectives are met. The annulus area should be monitored with Video for change as a part of the ongoing 5 year inspection interval.

241 AP 106 #9431 Annulus Inspection, Riser 17, Date 3/3/92
Review completed by gbj 7/13/04

This inspection was conducted from Riser 17, the image clarity is good, consistent with the film of this period. No irregularities of immediate concern were observed.

The annulus primary and secondary shells are covered with light mill scale, rust and other scale product, white to yellow in color. Scale and underlying metal roughness are present on both shell surfaces throughout the annulus area. It appears that the annulus area was subjected to a period of high humidity, typical of the other tanks in this complex. The piping appears to be in good condition, supports are sound, no areas of concern were noted.

Film was reviewed from start to 1 hr 27 minutes.

Recommendations:

Annulus ventilation systems should be monitored on scheduled bases to insure operational objectives are met. The annulus area should be monitored with Video for change as a part of the ongoing 5 year inspection interval.

AP 106 Video #10857 Inspection Dated 1/25/06 of Primary Tank, Risers 26
Review completed by gbj 3/7/06

The Primary Tank inspection was conducted from Riser 26. The film clarity is good. Areas of interest are zeroed in on with appropriate close-ups and hold time.

The Primary Tank interior shell walls are generally free of product scale. There is a tightly adhering scale, rust to white on the tank dome, broken in places exposing the underlying metal. There are areas that appear to be preferential corrosion on the dome attachment welds and HAZ.

The nozzle extensions are in like condition to the dome plate, no wasting or knife-edges were observed. The tank appurtenances appeared to be in good condition, no damage was found.

Note that only the vapor space was observable in this film sequence due to the high level of product stored in the tank. In the observable areas no reportable concerns corrosion or other damage of any magnitude were found.

AP 106 Video #10869 Inspection Dated 10/13/04 of Tank Annulus, Risers 46, 49,54 & 57
Review completed by gbj 3/5/06

This inspection was conducted from Riser 46, 49, 54 & 57; the image clarity is good, consistent with the film of this period. No irregularities of immediate concerns were observed.

The annulus primary and secondary shells are covered with light mill scale, rust and other scale product. Scale and underlying metal roughness are present on both shell surfaces throughout the annulus area. Numerous other construction markings remain on the tank surfaces; this would seem to indicate that little or no general wasting corrosion has occurred. The tank pedestal and floor slots appear to be in as constructed condition, no leakage or deterioration was noted. The piping within the annulus is in good condition, supports are sound, no areas of concern noted.

No areas of reportable corrosion or other damage was found in the review of this film.

241 AP 107 #9180 Annulus Risers 49, 54 Inspection Date 4/9/02
Review completed by gbj 7/13/04

This inspection was conducted from Risers 49 & 54, the image clarity is good, consistent with the film of this period. No irregularities of immediate concern were observed. Note: Although the video indicates that Riser 54 was utilized in the inspection there is no indication on the film when the relocation occurred. The video title remains the same throughout: APO7R49.

The annulus primary and secondary shells are covered with light mill scale, rust and other scale product. Scale and underlying metal roughness are present on both shell surfaces throughout the annulus area. It appears that this tank annulus is generally in better condition than the others in the complex. The piping appears to be in good condition, supports are sound, no areas of concern were noted.

Film was reviewed from start to 1 hr 27 minutes. AP 107 Riser 49 Start to finish at 1 hr 33 seconds.

Recommendations:

Annulus ventilation systems should be monitored on scheduled bases to insure operational objectives are met. The annulus area should be monitored with Video for change as a part of the ongoing 5 year inspection interval.

AP 107 Video #8543 & #8545 UT Scan Inspection Dated 6/19/00
Review completed by gbj 3/19/05

These film segments are of the tank primary shell UT scan procedure. No concerns were noted in the review of the film.

AP 107 Video #8575 UT Scan of Annulus Shell Inspection Dated 6/19/00
Review completed by gbj 3/19/05

This film is of the tank primary shell UT scan procedure. No concerns were noted in the review of the film.

241 AP 107 #9179 Annulus Risers 46, Inspection Date 4/9/02
Review completed by gbj 7/13/04

This film was completed on the same date as #9180, the conditions found are the same as reported under that inspection.

Film was reviewed from start to finish at 50 minutes.

241 AP 107 Primary Tank Riser 24 Video #8503, Inspection Date 7/16/97 and Primary Tank Risers 2, Video #9341 Date of Inspection 6/28/02
Review completed by gbj 12/2/04

Comparison of the 2 video films taken in 1997 and 2002, found little change in the condition of the tank.

The both films clarity is fair, flaking of film due to unknown source. The product level at the time of inspection in 1997 was below the second shell course cir weld. The 2002 film found it was within approximately 2 feet of the top knuckle to shell weld.

The vapor space condition was found to be substantially unchanged between the 2 films taking. The dome vapor space area is covered in a light rust colored scale. There are areas of isolated and interconnected pitting on the dome plate segments, the depth of these indications could not be determined. The plate attachment welds and HAZ show significant areas of preferential

corrosion extending the full length of the weld. The Riser extensions are thinned, but no wasted or ragged edges were noted. The attachment welds and HAZ are preferentially corroded throughout the vapor space, but, no quantitative assessment of this damage could be made.

Preferential Corrosion on Done attachment welds and Riser extension

The tank shell area was not visible in this film, with the exception of the area just below the knuckle attachment. It appears that this area was, at one time, covered with product. There was no evidence of corrosion or pitting in this area.

Recommendations:

The dome area is in poor condition due to corrosion. There maybe general corrosion as well as pitting. Future inspections should be conducted to monitor this condition. All available measures should be taken to determine the cause of the damage an mitigating action should be taken to remove the causative mechanism.

241 AP 107 Annulus Video #8554, 8555, Inspection Date 6/06/00 #8564, #8565 Dated 6/13/00
Review completed by gbj 2/15/05

These videos document AUT scans of primary tank shell as acquired from the annulus side of the tank. They appear to reference the location of the A scan in relationship to the circumferential welds. The Weld area HAZ appears to have been abrasively cleaned prior to the inspection. This for information only, no conclusions were drawn from this review on the AUT inspection technique or procedures.

241 AP 107 / 108 #9342 Annulus Risers 57, Inspection Date 4/15/02
Review completed by gbj 7/13/04

Tank 108 appears first on the film. This inspection was conducted from Riser 57, the image clarity is good, however, the movement of the camera is erratic at times, thus making the inspection difficult to follow. No areas requiring follow up were identified.

The annulus primary and secondary shells are covered with light to heavy scale. The heavy scale build up was observed just below the first and second shell course weld on the secondary containment. Scale and underlying metal roughness and mill scale are present on both shell surfaces throughout the annulus area. The piping appears to be in good condition, supports are sound, no areas of concern were noted.

Film was reviewed from start to 1 hr 27 minutes.

Recommendations:

Future inspection should include a review of the film to determine the location of the heavy scale on the secondary shell. Re-inspection of this area should be done during the next 5 year inspection program.

241 AP 108 Primary Tank Risers 1, Video #9343 Date of Inspection 7/2/02
Review completed by gbj 12/2/04

The film clarity is fair or good, no flaky streaks or other problems. The product level at the time of inspection was within approximately 2 feet of the knuckle to shell weld.

The dome, vapor space area is covered in a light rust colored scale. There are areas of isolated pits but the corrosion has generalized to the point where they are less discernable than on the low knuckle and shell. The depth of these indications could not be determined. The plate attachment welds and HAZ show areas of preferential corrosion, some extending the full length of the weld. The Riser extensions are thinned with some ragged edges with attachment welds and HAZ in some cases preferentially corroded.

The Riser Extensions are corroded and Preferential corrosion was found on the Dome attachment welds and in the HAZ.

Recommendations:

The dome area is in poor condition due to corrosion. There maybe general corrosion as well as pitting. Future inspections should be conducted to monitor this condition. All available

measures should be taken to determine the cause of the damage an mitigating action should be taken to remove the causative mechanism.

241 AP 108 Annulus Riser 49 Video #9181 Inspection Date 4/09/02 & Riser 54 Inspection Dated 4/09/02, Video # 9182
Review completed by gbj 2/15/05

This inspection was conducted from Risers 49 and 54 although the camera was relocated several times (that is brought up out of the riser and reinserted) there was no indication if the riser location was changed on the film title. The image clarity is good, however, the movement of the camera is erratic at times, thus making the inspection difficult to follow. No areas requiring follow up were identified.

The annulus primary and secondary shells are covered with light to heavy scale. The heavy scale build up was observed just below the first and second shell course weld on the secondary containment. Scale and underlying metal roughness and mill scale are present on both shell surfaces throughout the annulus area. The piping appears to be in good condition, supports are sound, no areas of concern were noted.

Film was reviewed from start to 1 hr 18 minutes.

Recommendations:

Future inspection should include a review of the film to determine the location of the heavy scale on the secondary shell. Re-inspection of this area should be done during the next 5 year inspection program.

AW Tank Farm

AW 101 Primary Tank Video #9150, Dated 9/18/01
Review Completed 10/24/04 by gbj

The film was found to be of acceptable clarity. Close up imagines of Riser extensions are included in this report.

The tank product level is approximately 2 feet below the knuckle to shell attachment weld. There is an accumulation of heavy white scale up to the knuckle weld, evidence of the level having been higher at one time. The knuckle and dome are covered with corrosion product (rust) and heavy white/yellow chemical residue.

There is evidence in the vapor space of extensive corrosion attack. The corrosion attack is generalized to include the dome, knuckle and exposed shell plate. The weldment /HAZ associated with these components have, in places, been preferentially attacked, notably in the HAZ at the shell to knuckle weld.

Several of the Riser extensions thinned, but, with enhanced images were found not to have been wasted through as they appeared to be in the video film. No absolute quantitative assessment of the metal loss could be made.

The tank shell plate condition could not be determined due to the heavy scale accumulation. Those areas that were visible appear to be wasted as describe above.

Severe Wasting of Riser Extensions

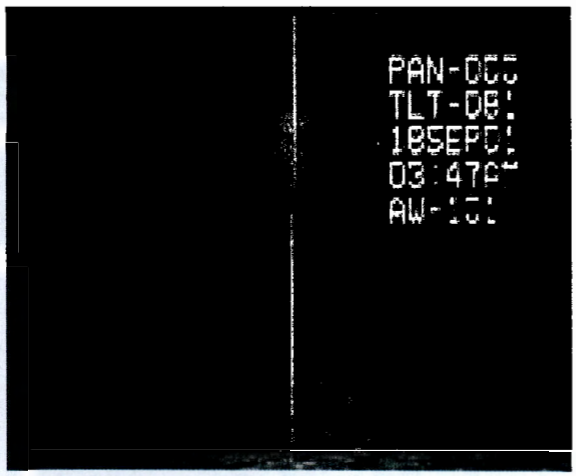

Tank Shell and product lines

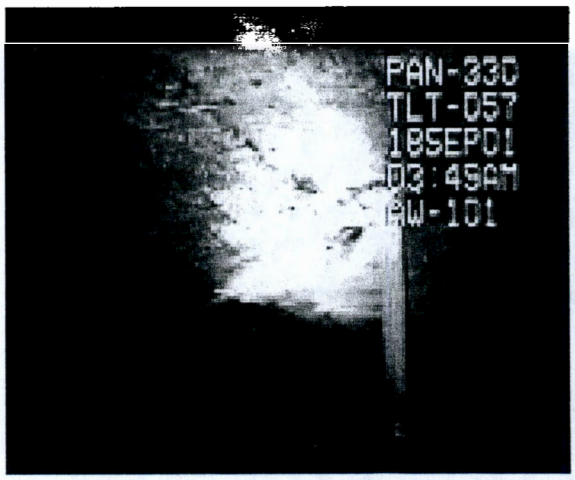

Dome Chemical Residue

Recommendations:

These conditions should be monitored for change as a part of the ongoing inspection interval.

AW 102 Annulus Riser 45 Video #9654 and 9655 Dated 08/21/01
Review Completed 21/14/05 by gbj

Film shows primary and secondary shell walls with patches of mill scale and rust. The primary shell walls have several areas of isolated pitting in areas where the mill scale has sloughed off. Minor pitting and pitting networks were also observed on the bottom knuckle along with general corrosion scale and surface roughness on the haunch. However, no significant corrosion pitting, or other damage was noted on in these area of the tank. Film was viewed to 62 Minutes, end of recording.

Recommendations:

These conditions should be monitored for change as a part of the ongoing inspection interval.

AW 102 Primary Tank, Riser 45 Video #9151, Dated 09/22/01
Review Completed 2/14/05 by gbj

The film was found to be of acceptable clarity. Close up imagines of Riser extensions are included in this report.

The tank product level is approximately 2 from the bottom, thus allowing almost complete inspection of the tank shell. There is an accumulation of heavy white scale on the exposed shell courses with patches of rust bleed through, with indications of under lying corrosion pitting. This observed where it was evident of the level having been higher at one time.

There is evidence in the vapor space of extensive corrosion attack. The corrosion attack is generalized to include the dome, knuckle and exposed upper shell plate. The weldment /HAZ associated with these components have, in places, been preferentially attacked, notably in the HAZ at the shell to knuckle weld.

Several of the Riser extensions have wasted, although there was not evidence of complete through wall corrosion. No absolute quantitative assessment of the metal loss could be made.

One riser nozzle was found to be steadily leaking product into the tank, this was well documented in the video.

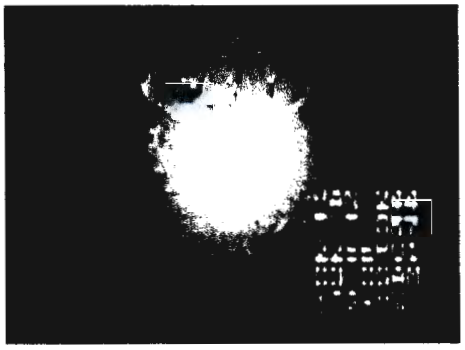

AW 102 Annulus Riser 17B (Highlights)Video #9437 Dated 8/5/91
Review Completed 11/5/04 by gbj

Film shows primary and secondary shell walls with accumulations of mill scale and patches of rust, typical of this tank annulus. These 'highlights" are narrated and are directed at demonstrating the capability of the video inspection system more than providing a systematic inspection of the tank. No indications of concern were noted on this film. The video was less than 8 minutes.

AW 102 Annulus Riser 17B (Highlights) Video #9434 Dated 8/5/91
Review Completed 11/5/04 by gbj

This film is a duplicate of #9437 reviewed above. No narrative accompanies this film however.

AW 102 Tank Annulus, Video #10348 Riser 50 Dated 8/21/01 & AW 103 Primary Tank Inspection Dated 4/17/02
Review Completed 3/12/06 by gbj

The inspection film is of good clarity and covers in adequate detail the tank annulus components, both primary and secondary containment.

The annulus primary tank is covered in a light to moderate rust and mill scale. There are areas of light to moderate scattered pitting on the surfaces observed in this film sequence, these pits are considered to be superficial, although absolute determination of the their severity could be made. There is typical construction writing and marking artifacts throughout the tank. The bottom shell and knuckle appear to be in like condition to the top but with less evidence of scale and pitting. The tank pedestal appears to be in good condition; no notable damage or other concerns were observed.

The secondary tank shell is covered in large areas of moderate to heavy yellow to white colored scale and rust like corrosion product. The floor of the annulus is covered in loose scale that has fallen from the tank shell and accumulated over time.

AW 103 Annulus Riser 17L (Highlights) Video #9568 Dated 8/29/91
Review Completed 11/5/04 by gbj

Film shows primary shell walls with accumulations of mill scale and patches of rust, typical the primary shell conditions seen elsewhere. The secondary tank shell has areas of heavy accumulations of light colored scale deposits (like calcium stalactites) beginning at the haunch to shell attachment weld running to the bottom of the annulus. This could be residue from water ingress during or after construction. No determination could be made as to wall loss/corrosion damage.

Secondary Shell Scale formations

The film is approximately 10 minutes in duration. Other than shown above no other concerns were noted.

AW 103 Annulus Video #9152, Dated 11/23/96
Review Completed 10/30/04 by gbj

This film is of AUT scan of annulus primary tank shell. The focus of the film was to monitor the function of the scanner, no meaningful visual information was found.

AW 103 Primary Tank Video #9344 Dated 4/17/02
Review Completed 10/30/04 by gbj

This film sequence was run to examine the tank dome where deep isolated pits were found. No other visual inspection was done.

AW 103 Annulus Tank Video #9184 Dated 4/03/02
Review Completed 11/1/04 by gbj

Film shows primary and secondary shell walls with accumulations of scale and patches of rust. The primary shell walls have rivers of dried couplent flows across large areas. The tank bottom is covered in light rust scale, some liquid may have been present, see photograph below.

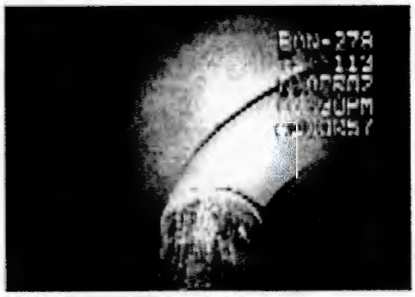

No significant corrosion pitting, or other damage was noted on in this area of the tank. Film was view to 1.35 Minutes, end of recording.

Recommendations:

These conditions should be monitored for change as a part of the ongoing inspection interval.

AW 103 Annulus Tank Risers 4852 Video #9183 Dated 4/03/02
Review Completed 11/1/04 by gbj

Film shows primary and secondary shell walls with accumulations of scale and patches of rust. The primary shell walls have rivers of dried couplent flows across large areas. Minor pitting and pitting networks were also observed. The film shows the primary tank pedestal and bottom slots, no evidence of leakage or structural distortion was seen.

No significant corrosion pitting, or other damage was noted on in this area of the tank. Film was viewed to 47 Minutes, end of recording.

Recommendations:

These conditions should be monitored for change as a part of the ongoing inspection interval.

AW 103 Annulus Tank Highlights Video #9740 Dated 4/18/96
Review Completed 11/1/04 by gbj

This film is less than 15 minutes long with no significant additional findings or observations. No detectable changes or new conditions could be seen between the later inspection film reviewed above, Video 9183 taken 4/03/02.

AW 103 Primary Tank Inspection

At the time of inspection, the tank product liquid level was almost to the haunch connection weld, thus, very little of the tank shell was visible for inspection.

The dome plate and riser attachment welds are degraded preferentially with little or no evidence of weld reinforcement remaining in large areas. There is a heavy accumulation of rust (and other corrosion product) with pitting networks evident across the entire vapor space. The riser extensions show thinning at the exposed edges, but no clearly through-wall wasting was noted.

AW 104 Annulus Riser 48 Video #9662 Dated 11/07/01
Review Completed 11/3/04 by gbj

Film shows primary and secondary shell walls with accumulations of scale and patches of rust. The primary shell walls have rivers of what is described as "dried laitance flows" across large areas running to the bottom of the tank. The appearance of these flows is not consistent with original construction laitance flow, in that it clearly occurred much later in the life of the tank. This is more probably spill of chemical additives used to adjust the ph of the stored product.

Minor pitting and pitting networks were also observed. The film shows the primary tank pedestal and bottom slots, no evidence of leakage or structural distortion was seen.

No significant corrosion pitting, or other damage was noted on in this area of the tank. Filrn was view to 46 Minutes, end of recording.

Recommendations:

These conditions should be monitored for change as a part of the ongoing inspection interval.

AW 104 Annulus Riser 49 Video #9212 Dated 7/30/02
Review Completed 11/3/04 by gbj

Film shows primary and secondary shell walls with patches of mill scale and rust. The primary shell walls have rivers of what is described as "dried laitance flows" across large areas running to the bottom of the tank. Minor pitting and pitting networks were also observed. There is what appears to be general corrosion scale and surface roughness in the haunch and knuckle areas. However, no significant corrosion pitting, or other damage was noted on in this area of the tank. Film was view to 47 Minutes, end of recording.

One area of note; the tank bottom at the knuckle to pedestal interface was found to have an inordinate amount of what appears to be corrosion product and other debris, see picture below. This condition should be followed in all future inspections.

Recommendations:

These conditions should be monitored for change as a part of the ongoing inspection interval.

AW 104 Annulus Riser 45 Video #9663 Dated 11/07/01 and AW 104 Annulus, Riser 50 Video 9664 Dated 11/07/01
Review Completed 11/3/04 by gbj

Film shows primary and secondary shell walls with patches of mill scale and rust. The primary shell walls have rivers of what is described as "dried laitance flows" across large areas running to the bottom of the tank. Minor pitting and pitting networks were also observed. There is what appears to be general corrosion scale and surface roughness in the haunch and knuckle areas. However, no significant corrosion pitting, or other damage was noted on in this area of the tank. Film was viewed to 30 Minutes, end of recording.

Recommendations:

These conditions should be monitored for change as a part of the ongoing inspection interval.

AW 104 Tank Annulus, Video #10352 Risers 48 &49 Dated 7/30/02
Review Completed 3/12/06 by gbj

Risers 48 & 49 Film shows primary and secondary shell walls with accumulations of scale and patches of rust. The primary shell walls have rivers of what is described as "dried laitance flows" across large areas running to the bottom of the tank. Minor pitting and pitting networks were also observed. There is typical construction writing and marking artifacts throughout the tank.

The film shows the primary tank pedestal and bottom slots, no evidence of leakage or structural distortion was seen.

Primary Tank Inspection Riser 19 At the time of inspection, the tank product liquid low allowing inspection of a large percentage of the tank shell.

There is what appears to be a bathtub ring approximately 3 feet from the top shell course to knuckle attachment weld. Above this ring, what was the vapor space shows evidence of moderate to severe general corrosion and pitting on all surfaces. The dome and riser attachment welds are degraded preferentially with little or no evidence of weld reinforcement remaining in large areas. The riser extensions show thinning at the exposed edges, but, no clearly through-wall wasting was noted. The shell walls, below what was the product high level, appear to be in good condition, although there is light to moderate scale remaining, there is no evidence of corrosion product accumulation, pitting or weld degradation.

AW 105 Primary Tank, Riser 22 Video #9670 Dated 9/20/01
Review Completed 11/8/04 by gbj

At the time of inspection, the tank had approximately 2 feet of yellow to white cake like product on remaining in the bottom, thus providing an excellent opportunity to inspect the shell area in almost its entirety. This opportunity was taken advantage of with a thorough video inspection of all the visible tank surfaces and internal components. The film is 1 hour and 6 minutes long.

There is what appears to be a bathtub ring approximately 3 feet from the top shell course to knuckle attachment weld. Above this ring, what was the vapor space shows evidence of moderate to severe general corrosion and pitting on all surfaces. The dome and riser attachment welds are degraded preferentially with little or no evidence of weld reinforcement remaining in large areas. The riser extensions show thinning at the exposed edges, but, no clearly through-wall wasting was noted. The shell walls, below what was the product high level, appear to be in good condition, although there is light to moderate scale remaining, there is no evidence of corrosion product accumulation, pitting or weld degradation.

Recommendations:

These conditions should be monitored for change as a part of the ongoing inspection interval.

AW 105 Tank Annulus, Riser 42 Video #9671 Dated 8/16/01
Review Completed 02/14/05 by gbj

Film shows primary and secondary shell walls with accumulations of scale and patches of rust. The primary shell walls have rivers of dried couplent flows across large areas.

No significant corrosion pitting, or other damage was noted on in this area of the tank. Film was viewed to 30 Minutes, end of recording.

Recommendations:

These conditions should be monitored for change as a part of the ongoing 5 year inspection interval.

AW 106 Tank Annulus, Risers 43 & 51 Video #10358 Dated 8/ 14 & 15 /01
Review Completed 3/12/06 by gbj

The inspection film is of good clarity and covers in adequate detail the tank annulus components, both primary and secondary containment.

The annulus primary tank is covered in a light to moderate rust and mill scale. There are areas of light to moderate scattered pitting on the surfaces observed in this film sequence, these pits are considered to be superficial, although absolute determination of the their severity could be made. There is typical construction writing and marking artifacts throughout the tank. The bottom shell and knuckle appear to be in like condition to the top but with less evidence of scale and pitting. The tank pedestal appears to be in good condition, no notable damage or other concerns were observed.

The secondary tank shell is covered in moderate to heavy (in areas) light colored scale and rust like corrosion. There is some evidence of water infiltration from the top of the tank. This is believed to be the source of the scale, although where and how this may have occurred is uncertain. The floor of the annulus is covered in loose scale that has fallen from the tank shell and accumulated over time.

AW 106 Primary Tank, Risers 17 Video #10359 Dated 9/20/01
Review Completed 3/12/06 by gbj

At the time of inspection, the tank product liquid low allowing inspection of a large percentage of the tank shell. This opportunity was taken advantage of with a thorough video inspection of all the visible tank surfaces and internal components.

There is what appears to be a bathtub ring (wasted or preferentially corroded area in a circumferential weld) approximately 8 feet from the top shell course to knuckle attachment weld. Above this ring, what was the vapor space shows evidence of moderate to severe general corrosion and pitting on all surfaces. The dome and riser attachment welds are degraded preferentially, with little evidence of weld reinforcement remaining in large areas. The riser extensions show thinning at the exposed edges, but, no clearly through-wall wasting was noted. The shell walls, below what was the product high level, show areas of isolated pitting and a build up of white to green product scale.

AW 106 Tank Annulus Inspection Dated 8/15/01

The inspection film is of good clarity and covers in adequate detail the tank annulus components, both primary and secondary containment.

See comments as per inspection same date on DVD #10359 above.

AW 106 Tank Annulus, Risers 45Video #10360 Dated 8/ 14 & 15 /01
Review Completed 3/12/06 by gbj

The inspection film is of good clarity and covers in adequate detail the tank annulus components, both primary and secondary containment.

The annulus primary tank is covered in a light to moderate rust and mill scale. There are areas of light to moderate scattered pitting on the surfaces observed in this film sequence, these pits are considered to be superficial, although absolute determination of the their severity could be made. There is typical construction writing and marking artifacts throughout the tank. The bottom shell and knuckle appear to be in like condition to the top but with less evidence of scale and pitting. The tank pedestal appears to be in good condition; no notable damage or other concerns were observed.

Area of Interest Dated 8/14/01 Annulus

These film details a finding of a group of pits with evidence of some leakage in to the annulus. It appears that this is on the secondary containment shell wall. There was no audio description; therefore, it could not be assessed further.

SY Tank Farm

SY 101 DVD #10474 & #10119 Inspections Dated 5/15/03 of Primary Tank Riser 6 Review completed by gbj 2/05/06

The DVD conversion from the VHS video film was found to be of acceptable clarity. It was noted however that the lighting intensity on this film segment was not adjustable, which lead to washout in some areas of the inspection.

The tank product level is approximately 2 feet below the knuckle to shell attachment weld. There is an accumulation of heavy white scale up to the knuckle weld, evidence of the level having been higher at one time. The knuckle and dome are covered with corrosion product (rust) and heavy white/yellow chemical residue.

There is evidence in the vapor space of light to moderate corrosion scale on all surfaces, no notable damage was found. The weldment /HAZ in the vapor space appear to be in serviceable condition, no preferential corrosion noted.

Riser extensions appear to be full thickness, no wasting or thinning was found.

Recommendations:

These conditions should be monitored for change as a part of the ongoing inspection interval.

SY 101 DVD #10475 Inspection Dated 4/30/03 of Tank Annulus Review completed by gbj 2/6/06

Film shows primary and secondary tank components have light to moderate accumulations of rust scale and post heat treatment gray scale over most of the observable surfaces. The primary shell walls have rivers of dried laitance flow, typical of tanks of this construction. There appears to be superficial corrosion pitting and pitting networks where the mill scale has broken away from the plate. The film shows clearly the primary tank support pedestal and bottom slots. There was no evidence of leakage or structural distortion was found in this area.

There were no areas concerns of note found on this segment of film.

SY 101 DVD #10117 Inspection Dated 4/29/03 of Tank Annulus Review completed by gbj 2/6/06

Film shows primary and secondary tank components have light to moderate accumulations of rust scale and post heat treatment gray scale over most of the observable surfaces. The primary shell walls have rivers of dried laitance flow, typical of tanks of this construction. There appears to be superficial corrosion pitting and pitting networks where the mill scale has broken away

from the plate. The film shows clearly the primary tank support pedestal and bottom slots. There was no evidence of leakage or structural distortion was found in this area.

There were no areas concerns of note found on this segment of film.

SY 101 DVD #10118 Inspection Dated 4/30/03 of Tank Annulus Risers 46 & 49 Review completed by gbj 2/6/06

Film shows primary and secondary tank components have light to moderate accumulations of rust scale and post heat treatment gray scale over most of the observable surfaces. The primary shell walls have rivers of dried laitance flow, typical of tanks of this construction. There appears to be superficial corrosion pitting and pitting networks where the mill scale has broken away from the plate. The film shows clearly the primary tank support pedestal and bottom slots. There was no evidence of leakage or structural distortion was found in this area.

There were no areas concerns of note found on this segment of film.

Recommendations:

These conditions should be monitored for change as a part of the ongoing inspection interval.

SY 102 DVD #10476 Inspections Dated 5/24/99 of Primary Tank Riser 3 Review completed by gbj 2/08/06

The DVD film was found to be of acceptable clarity. Note that DVD is marked as "Cross Site Pump Leak Check" and "Primary Inspection Riser 3." The later provides a good look at the condition of the Primary Tank condition.

The tank product level is approximately 5 to 6 feet below the knuckle to shell attachment weld. There is an accumulation of white scale up to the knuckle weld, evidence of the level having been higher at one time. The knuckle and dome are covered with corrosion product (rust) and white/yellow chemical residue, moderate to heavy in places.

There is evidence in the vapor space of light to moderate corrosion scale on all surfaces, no notable damage was found. The weldment/HAZ in the vapor space appear to be in serviceable condition, no preferential corrosion noted.

Riser extensions appear to be full thickness, no wasting or thinning was found.

Recommendations:

These conditions should be monitored for change as a part of the ongoing inspection interval.

SY 102 DVD #10479 Inspection Dated 4/30/03 of Tank Annulus
Riser 40 & 49 Review completed by gbj 2/7/06

Film shows primary and secondary shell walls with accumulations of scale and patches of rust. The primary shell walls have rivers of dried couplent flows across large areas. Minor pitting and pitting networks were also observed. The film shows the primary tank pedestal and bottom slots, no evidence of leakage or structural distortion was seen.

No significant corrosion pitting, or other damage was noted on in this area of the tank. Film was view to the end of recording.

SY 102 DVD #10480 Inspection Dated 5/1/03 of Tank Annulus
Riser 44 & 46 Review completed by gbj 2/7/06

Film shows primary and secondary tank components have light to moderate accumulations of rust scale and post heat treatment gray scale over most of the observable surfaces. The primary shell walls have rivers of dried laitance flow, typical of tanks of this construction. There appears to be superficial corrosion pitting and pitting networks where the mill scale has broken away from the plate. The film shows clearly the primary tank support pedestal and bottom slots. There was no evidence of leakage or structural distortion was found in this area.

There were no areas concerns of note found on this segment of film.

SY 103 DVD #10484 Inspection Dated 4/22/03 of Tank Annulus
Riser 46 & 50 Review completed by gbj 2/8/06

Film shows primary and secondary tank components have light to moderate accumulations of rust scale and post heat treatment gray scale over most of the observable surfaces. The primary shell walls have rivers of dried laitance flow, typical of tanks of this construction. There appears to be superficial corrosion pitting and pitting networks where the mill scale has broken away from the plate. The film shows clearly the primary tank support pedestal and bottom slots. There was no evidence of leakage or structural distortion was found in this area.

There were no areas concerns of note found on this segment of film.

Recommendations:

These conditions should be monitored for change as a part of the ongoing inspection interval.

SY 103 Video #10485 Inspection Dated 7/29/02 of Tank Annulus, Risers 40 SY – 103
Primary Tank Inspection Dated 5/6/03
Review completed 3/9/06 by gbj

Tank Annulus – The inspection film is of good clarity and covers in adequate detail the tank annulus components, both primary and secondary containment.

The annulus primary tank is covered in a light to moderate rust and mill scale. There are areas of scattered and pitting networks on most of the surfaces observed in this film sequence, these networks are considered to be superficial, although absolute determination of the their severity could be made. There are typical construction writing and marking artifacts throughout the tank. The bottom shell and knuckle appear to be in like condition but with less evidence of scale and interconnected pitting networks. The tank pedestal appears to be in good condition, no notable damage or other concerns were observed.

The secondary tank shell is covered in heavy deposit of light colored scale and rust and other debris. The floor of the annulus is covered in loose scale that has fallen from the tank shell and accumulated over time.

Primary tank – The inspection film is of good clarity, but, does not cover in adequate detail (close up) the tank exposed shell, dome and internal components. At the time of inspection, the tank was filled to less than ½ capacity.

The tank shell walls are covered in a white, heavy tightly adhering product scale. This scale extends from just below the haunch attachment weld to be product level (at the time of inspection approximately 12 to 16 feet). The scale is broken in areas, however, no determination could be made as to the condition of the underlying metal.

The vapor space, including the haunch, dome plate and nozzles and nozzle extensions were found to be covered in moderate to heavy rust like corrosion product. The weld attachments are preferentially corroded leaving little or no weld re-enforcement. This damage extends into the HAZ where pitting and general wasting is extensive.

AY/AZ Tank Farm

AY- 101 Video #10367 Inspection Dated 1/15/01 of Tank Annulus, Riser 89
Review completed by gbj 3/6/06

The inspection film is of good clarity and covers in adequate detail the tank annulus components, both primary and secondary containment.

In this film sequence, the primary tank (most particularly pronounced in the upper ½) shell and knuckle are substantially covered in heavy corrosion product and mill scale, gray to dark rust in color. Of particular concern and note are four (4) what appear to be deep mechanical gouges running horizontally across the primary shell. The images do not provide a frame of reference to determine the severity or magnitude of these indications, however, they are clearly of significance depth and length to be of concern. See DVD # 10368 for the Wall Clearing film segment, this may account for how these defects may have occurred.

In this film sequence, the secondary tank shell appears to be in fair condition, with light to moderate rust and mill scale accumulations. There are also numerous other construction artifacts (markings/writing) on the tank surfaces. No significant corrosion, scale accumulation or mechanical damage was noted.

Recommendations:

A follow up inspection plan should be formulated to evaluate the extent of mechanical damage and its associated risk to the structural integrity of the primary tank.

AY- 101 Video #10368 Inspection Dated 1/17/01 of Tank Annulus, Riser 82 & Wall Cleaning, Riser 89 Dated 12/24/01
Review completed by gbj 3/6/06

The inspection film is of good clarity and covers in adequate detail the tank annulus components, both primary and secondary containment.

The primary tank shell is largely covered in areas of accumulated corrosion product in the form of scale and corrosion nodules. These nodules have been scoffed off mechanically in areas revealing significant isolated pits. No cause or quantitative assessment of these nodules and associated pits can be drawn from these images. The tank pedestal and floor slots appear to be in as constructed condition, no leakage or deterioration was noted.

In this film segment, the secondary tank shell appears to be in fair condition with light to moderate rust and mill scale accumulations. There are also numerous other construction artifacts (markings/writing) on the tank surfaces. No significant corrosion, scale accumulation or mechanical damage was noted.

The Wall Cleaning film segment was reviewed and found to be a test of this equipment fitness for purpose and not relevant to the condition assessment of the tank.

AY- 101 Video #10369 Inspection Dated 1/17/01 of Tank Annulus, Riser 81
Review completed by gbj 3/6/06

The inspection film is of good clarity and covers in adequate detail the tank annulus components, both primary and secondary containment.

This film segment confirms findings in the previously film reviewed. There is reason to believe from this film segment that there has been infiltration of water into the annulus. This is evidenced by a white scale, calcium like bathtub ring on the primary tank up to approximately the top of the bottom knuckle or bottom of the first shell course.

AY- 101 Video #10373 Inspection Dated 1/18/01 of Tank Annulus, Riser 85
Review completed by gbj 3/6/06

The inspection film is of good clarity and covers in adequate detail the tank annulus components, both primary and secondary containment.

This film segment confirms findings in the previously film reviewed of this area. See comments in review of DVD's 10367, 10368 & 10369.

AY- 101 Video #10372 Inspection Dated 1/18/01 of Tank Annulus, Riser 77
Review completed by gbj 3/6/06

The inspection film is of good clarity and covers in adequate detail the tank annulus components, both primary and secondary containment.

This film segment confirms findings in the previously film reviewed of this area. See comments in review of DVD's 10367, 10368 & 10369.

AY- 101 Video #10370 Inspection Dated 1/18/01 of Tank Annulus, Riser 79
Review completed by gbj 3/6/06

The inspection film is of good clarity and covers in adequate detail the tank annulus components, both primary and secondary containment.

This film segment confirms findings in the previously film reviewed of this area. See comments in review of DVD's 10367, 10368 & 10369.

AY- 101 Video #10374 Inspection Dated 1/27/01 of Tank Annulus, Riser 77 & Inspection Dated 4/11/01 Riser 77
Review completed by gbj 3/6/06

The inspection film is of good clarity and covers in adequate detail the tank annulus components, both primary and secondary containment.

This film segment confirms findings in the previously film reviewed of this area. See comments in review of DVD's 10367, 10368 & 10369.

Note that the inspection film dated 4/11/01 appears to be an attempt to gauge with a ruler the size/depth of some of the corroded surface of the tank. No meaningful information could be determined from this reviewer.

AY- 101 Video #10375 Inspection Dated 1/27/01 of Tank Annulus, Riser 91
Review completed by gbj 3/6/06

The inspection film is of good clarity and covers in adequate detail the tank annulus components, both primary and secondary containment.

This film segment confirms findings in the previously film reviewed of this area. See comments in review of DVD's 10367, 10368 & 10369.

AY- 101 Video #10390 Inspection Dated 7/12/01 of Tank Annulus, Riser 84
Review completed by gbj 3/6/06

The inspection film is of good clarity and covers in adequate detail the tank annulus components, both primary and secondary containment.

This film segment confirms findings in the previously film reviewed of this area. See comments in review of DVD's 10367, 10368 & 10369.

AY- 101 Video #10391 Inspection Dated 7/13/01 of Tank Annulus, Riser 80
Review completed by gbj 3/6/06

The inspection film is of good clarity and covers in adequate detail the tank annulus components, both primary and secondary containment.

This film segment confirms findings in the previously film reviewed of this area. See comments in review of DVD's 10367, 10368 & 10369.

AY- 101 Video #10394 Inspection Dated 7/19/01 of Tank Annulus, Riser 86
Review completed by gbj 3/6/06

The inspection film is of good clarity and covers in adequate detail the tank annulus components, both primary and secondary containment.

This film segment confirms findings in the previously film reviewed of this area. See comments in review of DVD's 10367, 10368 & 10369.

AY- 101 Video #10397 Inspection Dated 7/19/01 of Tank Annulus, Riser 79
Review completed by gbj 3/6/06

The inspection film is of good clarity and covers in adequate detail the tank annulus components, both primary and secondary containment.

This film segment confirms findings in the previously film reviewed of this area. See comments in review of DVD's 10367, 10368 & 10369.

AY- 101 Video #10365 Inspection Dated 10/9/01 of Tank Annulus, Risers 104 & 1F.
Primary Tank Inspection, Riser 57
Review completed by gbj 3/6/06

Tank Annulus. The inspection film is of good clarity and covers in adequate detail the tank annulus components, both primary and secondary containment.

This film segment confirms findings in the previously film reviewed of this area. See comments in review of DVD's 10367, 10368 & 10369.

Primary, In Tank Inspection. The inspection film is of fair to good clarity and covers in adequate detail the Primary tank shell, dome and internal components.

The tank at the time of this inspection was pumped down to approximately ¼ to 1/3 of its capacity. The shell up to within about 2 feet of the top knuckle attachment weld was covered in a heavy white product scale, little or no underlying shell metal could be seen. At the top of the scale deposit extending across the tank dome, there is a light to moderate rust deposit on all exposed surfaces. The film was only of fair clarity and therefore no detailed determination of the condition of the material condition could be made.

AY- 101 Video #10366 Inspection Dated 9/29/01 Primary Tank, Risers 54 Inspection Dated 9/27/01 Primary Tank , Riser 86
Review completed by gbj 3/8/06

The inspection film is of fair to good clarity and covers in adequate detail the Primary tank shell condition. Very little time is dedicated to the inspection of the tank dome or internal components.

The tank at the time of this inspection was pumped down to approximately ¼ to 1/3 of its capacity. The shell up to within about 2 feet of the top knuckle attachment weld was covered in a heavy white product scale, little or no underlying shell metal could be seen in this area. The scale is broken in areas revealing the underlying tank shell material which is covered in a heavy rust and corrosion product. The film does not record much of the area above the shell where the white scale ends. The film was only of fair clarity and limited scope and therefore no detailed determination of the condition of the dome or internal components could be made.

AY- 101 Video #10371 Inspection Dated 9/27/01 Primary Tank, Risers 66 Inspection Dated 1/18/01Tank Annulus , Riser 61
Review completed by gbj 3/8/06

Primary Tank Inspection. The inspection film is of fair to good clarity and covers in adequate detail the Primary tank shell condition. Very little time is dedicated to the inspection of the tank dome or internal components.

The tank at the time of this inspection was pumped down to approximately ¼ to 1/3 of its capacity. The shell up to within about 2 feet of the top knuckle attachment weld was covered in a heavy white product scale, little or no underlying shell metal could be seen in this area. The scale is broken in areas revealing the underlying tank shell material which is covered in a heavy rust and corrosion product. The film does not record much of the area above the shell where the white scale ends. The film was only of fair clarity and limited scope and therefore no detailed determination of the condition of the dome or internal components could be made.

Tank Annulus Inspection. The inspection film is of good clarity and covers in adequate detail the tank annulus components, both primary and secondary containment.

This film segment confirms findings in the previously film reviewed of this area. See comments in review of DVD's 10367, 10368 & 10369.

AY- 102 Video #10395 Inspection Dated 9/5/01 of Primary Tank, Riser 51
Review completed by gbj 3/8/06

The inspection film is of good clarity and covers in adequate detail the primary tank shell, dome and internal components.

The tank was filled to approximately ½ to 1/3 of its capacity at the time of the inspection. There was little or no meaningful accumulation of product scale on the shell or internal components. The tank dome was covered in a light to moderate layer of rust. Moderate to server preferential corrosion was noted in the dome area on the ligament attachment welds, in the weldment and HAZ. The nozzle extensions appeared to be thinning, the attachment welds were covered in heavy corrosion product in areas, no determination as to their condition could be made. The internal components appeared to be in serviceable condition, no damage was observed.

AZ- 101 Video #10404 Inspection Dated 9/25/01 of Tank Annulus, Risers 82 & 83
Review completed 3/9/06 by gbj

The inspection film is of good clarity and covers in adequate detail the tank annulus components, both primary and secondary containment.

The annulus primary tank is covered in a light to moderate rust and mill scale. There are areas of scattered and interconnected pitting networks on most of the surfaces observed in this film sequence, these networks are considered to be superficial, although absolute determination of the their severity could be made. These networks are most notable on the upper portion of the tank shell and knuckle. There are typical construction writing and marking artifacts throughout the tank. The bottom shell and knuckle appear to be in like condition but with less evidence of scale and interconnected pitting networks. The tank pedestal appears to be in good condition, no notable damage or other concerns were observed.

The secondary tank shell is covered in heavy deposit of light colored scale and rust like corrosion deposit. There is evidence of water infiltration from the top of the tank. This is believed to be the source of the scale, although where and how this may have occurred is uncertain. The floor of the annulus is covered in loose scale that has fallen from the tank shell and accumulated over time. There are areas of staining that suggest again that water has been present on the floor of the annulus at one time. That said, none was found to be present at the time of this inspection.

AZ- 101 Video #10405 Inspection Dated 9/25/01 of Tank Annulus, Risers 86
Review completed 3/9/06 by gbj

The inspection film is of good clarity and covers in adequate detail the tank annulus components, both primary and secondary containment.

This film sequence similar to that described in DVD #10405 above. No significant corrosion or other damage was found.

AZ- 101 Video #10873 Inspection Dated 9/25/01 of Tank Annulus, Risers 78
Review completed 3/9/06 by gbj

The inspection film is of good clarity and covers in adequate detail the tank annulus components, both primary and secondary containment.

This film sequence similar to that described in DVD #10405 above. No significant corrosion or other damage was found.

AZ- 102 Video #10410 Inspection Dated 2/8/01 of Tank Annulus, Risers 82
Review completed 3/9/06 by gbj

The inspection film is of good clarity and covers in adequate detail the tank annulus components, both primary and secondary containment.

This film sequence similar to that described in DVD #10405 above. No significant corrosion or other damage was found.

AZ- 102 Video #10411 Inspection Dated 2/28/01 of Tank Annulus, Risers 84
Review completed 3/9/06 by gbj

The inspection film is of good clarity and covers in adequate detail the tank annulus components, both primary and secondary containment.

This film sequence similar to that described in DVD #10405 above. No significant corrosion or other damage was found.

AZ- 102 Video #10409 Inspection Dated 2/6/01 of Tank Annulus, Risers 79
Review completed 3/9/06 by gbj

The inspection film is of good clarity and covers in adequate detail the tank annulus components, both primary and secondary containment.

This film sequence similar to that described in DVD #10405 above. No significant corrosion or other damage was found.

AZ- 102 Video #10413 Inspection Dated 2/7/01 of Tank Annulus, Risers 87
Review completed 3/9/06 by gbj

The inspection film is of good clarity and covers in adequate detail the tank annulus components, both primary and secondary containment.

This film sequence similar to that described in DVD #10405 above. No significant corrosion or other damage was found.

AZ- 102 Video #10412 Inspection Dated 2/7/01 of Tank Annulus, Risers 85
Review completed 3/9/06 by gbj

The inspection film is of good clarity and covers in adequate detail the tank annulus components, both primary and secondary containment.

This film sequence similar to that described in DVD #10405 above. No significant corrosion or other damage was found.

AZ- 101 Video #10872 Inspection Dated 9/26/01 Primary Tank, Risers 65
Review completed 3/9/06 by gbj

The inspection film is of poor clarity and quality. The camera upon entering the tank immediately formed condensate on the lens which greatly attenuated the image clarity. This condition persisted throughout the film. No meaningful inspection condition report could be made as a result.

APPENDIX F

CORROSION MONITORING ASSESSMENT

A Review of the Present Status of Corrosion Monitoring for DST Waste Storage Tanks And Transfer Pipelines

Prepared by:

Dan Powell, P. Eng.

TABLE OF CONTENTS

1.0 INTRODUCTION F-6

2.0 IMPORTANCE FOR MAINTAINING SYSTEM INTEGRITY F-6
- 2.1 TANK INTEGRITY PROGRAMS F-7
- 2.2 MAINTAINING INTEGRITY OF TRANSFER PIPELINES F-8

3.0 INSPECTION AND CORROSION MONITORING METHODOLOGY F-10
- 3.1 PRACTICAL LIMITATIONS ON ABILITY TO INSPECT WASTE TANKS AT HANFORD F-10
- 3.2 INSPECTION PROGRAMS FOR ASSESSING INTEGRITY OF TRANSFER PIPING F-11
- 3.3 HISTORICALLY CORROSION RATES HAVE BEEN CALCULATED FROM CHEMICAL ANALYSES F-11
- 3.4 PURPOSE OF CORROSION MONITORING F-12

4.0 OVERVIEW OF INSPECTION METHODOLOGIES F-12
- 4.1 ULTRASONICS F-13
- 4.2 MAGNETIC FLUX LEAKAGE F-14
- 4.3 X-RAY RADIOGRAPHY F-15

5.0 OVERVIEW OF CORROSION MONITORING OPTIONS F-16
- 5.1 INTRUSIVE CORROSION MONITORING TO DETECT CORROSION WITHIN THE PROCESS FLUIDS F-16
- 5.2 METAL COUPONS F-17
  - 5.2.1 Intrusive Flat Metal Coupons F-17
  - 5.2.2 Flush Mounted Coupons F-20
  - 5.2.3 U-Bend Coupons F-21
  - 5.2.4 Exposure Period F-21
- 5.3 ELECTRICAL RESISTANCE PROBES F-23
- 5.4 HIGH RESOLUTION ELECTRICAL RESISTANCE PROBES F-23
- 5.5 LINEAR POLARIZATION RESISTANCE F-25
- 5.6 AUTOMATIC DATA COLLECTORS TO MEASURE AND RECORD ELECTRONIC PROBE DATA F-28
- 5.7 ELECTROCHEMICAL NOISE (ECN) TECHNIQUE FOR MONITORING CORROSION F-29
- 5.8 ACCESS FITTINGS F-30

6.0 METHOD FOR ASSESSING THE INTEGRITY OF TRANSFER PIPELINES FROM EXTERNAL CORROSION F-34
- 6.1 HISTORICAL RULES FOR MAINTAINING PIPELINE INTEGRITY FROM EXTERNAL CORROSION F-35
  - 6.1.1 Application of the Methodology to Transfer Lines at Hanford F-36

6.2 PRESSURE TESTING – HISTORICALLY USED TO DEMONSTRATE INTEGRITY F-37
6.2.1 General Considerations Associated with Hydrotesting of Pipelines F-38
6.2.2 Considerations for Hydrotesting Transfer Lines at Hanford F-39
6.3 IN-LINE INSPECTIONS – HISTORICALLY USED TO DEMONSTRATE PIPELINE INTEGRITY F-39
6.3.1 Ultrasonic Inspections F-40
6.3.2 Magnetic Flux Leakage Inspections F-40
6.3.3 Clean the Pipeline Prior to Any Inspections F-40
6.3.4 Limitations of In-Line Inspections for Transfer Pipelines at Hanford F-40
6.4 METHODOLOGY FOR INSPECTING EXTERIOR SURFACE OF BURIED TRANSFER LINES F-41
6.4.1 Pre-Assessment F-41
6.4.2 Indirect Inspections F-42
6.4.3 Direct Examinations F-43
6.4.4 Post-Assessment F-44
6.4.5 Applying the Direct Assessment Process at Hanford F-45

7.0 MONITORING CORROSION AND EROSION WITHIN TRANSFER PIPELINES F-45
7.1 CORROSION MONITORING WITHIN TRANSFER PIPELINES F-46
7.2 MEASURING WALL THICKNESS AT LOCATIONS OF DIRECT ASSESSMENT EXCAVATIONS F-47
7.3 CONTINUE MODELING CORROSION RATES FROM CHEMICAL ANALYSES F-48

8.0 CORROSION MONITORING PROGRAM FOR THE DSTS AT HANFORD F-48
8.1 INSPECTIONS FOR ASSESSING INTEGRITY OF THE STORAGE TANKS F-49
8.2 CORROSION MONITORING WITHIN THE STORAGE TANKS F-50
8.2.1 History of Corrosion Monitoring at Hanford F-53
8.2.2 Development & Implementation of EN Monitoring at Hanford F-54
8.2.3 Design Criterion for EN Probe Design F-55
8.2.4 Representative Results from EN Monitoring of Waste Tanks at Hanford F-56
8.3 PROCEDURES FOR TRANSFERRING PRODUCTS BETWEEN STORAGE TANKS F-60
8.4 PREVIOUS FAILURES OF THE TRANSFER LINES F-61
8.4.1 Waste Consolidation – Ongoing Operations F-61
8.4.2 SL-503 Valve Pit Jumper F-62
8.4.3 241 A-B Valve Pit Jumper & Failure of the 233 Line F-63
8.4.4 SL-119 Saltwell Piping Failure F-63
8.4.5 General Comments Regarding Corrosion within the Transfer Lines F-64

9.0 SUMMARY AND BEST PRACTICES FOR IMPROVING CORROSION MONITORING PRACTICES F-65
9.1 SUMMARY AND BEST PRACTICES FOR ENHANCING MONITORING PROGRAM – DSTS F-65
9.2 SUMMARY AND BEST PRACTICES FOR MONITORING – WITHIN TRANSFER LINES F-68

10.0 REFERENCES F-70

TABLE OF FIGURES

Figure 1. The Use of Ultrasonic Transducers. F-14
Figure 2. Magnetic Flux Leakage. F-15
Figure 3. Radiography Inspection of Metals F-16
Figure 4. Representative Corrosion Coupon F-19
Figure 5. Different Types of Coupons. F-19
Figure 6. Coupon Holder Mounts onto Access Fitting Plug. F-19
Figure 7. Flush Mounted Coupon and Coupon Holder F-20
Figure 8. Coupon Holders for Flush Mounted Coupons F-21
Figure 9. Example -Corrosion Rate Reach an Equilibrium with Exposure Time. F-22
Figure 10. Different Styles of Electrical Resistance Probes. F-23
Figure 11. Microcorr – A High Resolution Electrical Resistance Probe. F-25
Figure 12. Three Element Linear Polarization Resistance Probe. F-26
Figure 13. Two Element Linear Polarization Resistance Probes F-27
Figure 14. Photographs of Two and Three Electrode LPR Probes. F-27
Figure 15. Probe, Data Collector, and Hand Held Data Logger. F-29
Figure 16. Illustration of an Access Fitting. F-31
Figure 17. Flush Coupon Mounted Even With the Bottom of Pipe F-32
Figure 18. Service Valve and Retrieval Tool F-33
Figure 19. Accessing the Pipeline Through Retrieval Tool and Service Valve. F-34
Figure 20. Schematic of EN Monitoring System, as installed at 241-AN-107 ..... F-55
Figure 21. Typical EN data showing uniform corrosion in 241-AN-105. ..... F-57
Figure 22. EN Data showing Unknown Electrochemical Transients in 241-AN-105 ..... F-58
Figure 23. Raw Data showing Uniform Corrosion – Channel 3 of 241-AN-107 Probe. F-59
Figure 24. Statistical EN Data Shows Electrochemical Voltage Transients in 241-AN-107... F-60

FORWARD BY THE IQRPE

In the early days of the DST integrity assessment effort, an industry corrosion expert was contracted to assess the corrosion monitoring programs at Hanford. That assessment served as a basis for section 9.2.7 of this document. Since the corrosion expert's assessment, more in-depth studies have been performed. The assessment that follows includes consideration of corrosion monitoring in both the DST's and the transfer lines. The corrosion expert had a background in natural gas and petroleum piping, the failure of either is generally immediately dangerous to life and health of the general public. The IQRPE understands that the failure of Hanford piping, while serious from an environmental standpoint, is not catastrophic to human life or property (other than the loss of the transfer pipe).

Therefore this assessment of the Hanford corrosion monitoring programs and methods was used as a general guide in providing a more practical assessment as is provided in 9.2.7.

In the pages that follow, "recommendations" have been revised to "best practices." Improvements or activities identified as a "best practice" may be programmatically beneficial following a cost-benefits analysis against the tank farm mission. Most "best practices" identified in this appendix are generally life-extension activities that when implemented could greatly extend the useful life of the transfer lines or tanks. Some best practices have been extracted to section 9.2.7 and identified as "recommendations." Those practices are considered necessary and sufficient to monitor tank and pipeline integrity for the purpose of meeting the 2028 tank farm mission.

As indicated, this corrosion expert's assessment was written early in the project. Throughout the text, the IQRPE has inserted "IQRPE's notes," that are intended to update the reader on more current developments regarding the contextual subject matter.

1.0 INTRODUCTION

Large quantities of mixed radioactive waste are being stored within the single shell tanks (SST) and double shell tanks (DST) at Hanford. The waste products are being transferred from the SSTs to the DSTs as part of the processes to consolidate and concentrate these wastes prior to the vitrification process, which would allow for long-term storage. It may take many years before the waste products stored within the numerous tanks are processed. Hence, it will be necessary to extend the lifetime of the DSTs beyond the original design lifetime. This can be done safely, provided the integrity of the tanks and the associated transfer piping system is maintained.

The first step in extending the lifetime of the waste storage tanks and transfer piping is to know the present condition of the tanks and piping. This includes determining the location and extent of any corrosion. Another key component is to know whether the corrosion mechanisms are active or dormant. The integrity assessments would use that information when making remaining strength calculations under the operating conditions.

The focus of this document is to provide an overview of corrosion monitoring technology and options for installing and utilizing corrosion monitoring for the DSTs and transfer pipelines at Hanford. By early detection of changes in the operating conditions within the tanks and transfer piping, the appropriate corrosion control programs can be implemented, such that any damage to the base materials can be minimized, and the lifetime of the DSTs and transfer piping can be extended. Following an abbreviated review of corrosion monitoring technology used by multiple industries, the present status of the corrosion monitoring programs at Hanford will be reviewed. Best practices will then be stated for the most practical monitoring programs that could be implemented for helping to maintain the system integrity of the DSTs and transfer piping at Hanford. Note that (at the time of this writing) only four out of twenty eight DSTs have functional corrosion monitoring instrumentation. The short-term goal would then be to install simple, reliable corrosion monitoring systems within all DSTs and transfer pipelines to have some data available that will indicate the onset of any internal corrosion.

2.0 IMPORTANCE FOR MAINTAINING SYSTEM INTEGRITY

It is essential for the Hanford Operations to maintain the integrity of the waste storage tanks and transfer piping system until such time that the waste in all of the single and double shell tanks has been properly processed. This requires programs to be in place to confirm that the integrity of the storage tanks and associated piping is being maintained. The tanks and piping should be continuously monitored for indication of active corrosion, and as necessary chemical treatments or other remedial actions should be undertaken to keep the system within specifications. Monitoring should also be used to confirm the effectiveness of any treatments. The program, which Hanford Operations has been using to confirm the integrity of the DSTs, incorporates video inspections and ultrasonic measurements of the thickness of the shells.

Those measurements are used to confirm that any loss of base material has not reduced the strength of the tanks or transfer pipelines below the design criteria.

There has been minimal usage of corrosion monitoring techniques, such as corrosion coupons or electronic probes, at Hanford. Instead, the corrosion rates have historically been estimated, based on chemical analysis of the waste products stored within the tanks, using corrosion models developed at Savannah River and laboratory test results. It is difficult to collect samples of the waste stored within the different DSTs, and that it can be very expensive to complete the chemical analyses of these radioactive samples. Consequently, the number of samples, which are collected and analyzed from each of the DSTs, is limited and samples are collected infrequently.

Although corrosion rate modeling has been more than adequate for Hanford Operations in the past, it is possible that conditions within the waste storage tanks may change, and corrosion could progress undetected, unless new corrosion monitoring instrumentation is installed. Within the last few years, Hanford has installed electrochemical noise (EN) corrosion monitoring probes within 4 of 28 DSTs. Their reports indicate difficulties in interpreting the significance of some of the signals, and there have also been periods of time when data could not be collected due to lack of electrical power. Accordingly, this report will identify best practices for additional corrosion monitoring instrumentation (coupons and electronic probes) to be installed in all waste storage DSTs and on the jumpers for the transfer pipelines. This monitoring would provide for a near continuous monitoring, such that changes in the operating environment which affect the corrosion processes, can be detected – even if there is a disruption in electrical power. Note that the proposed changes to the monitoring systems would not altogether replace the chemical analysis approach to predict corrosion rates. Instead, the proposed use of metal coupons and electrical probes would complement the periodic chemical sampling and analysis program and EN technology with mature monitoring technologies that have been used for many industries.

The subsequent sections will provide amplified discussions on corrosion monitoring and inspection techniques, and will identify practical approaches that can be implemented at Hanford. By having an effective inspection and corrosion monitoring program, it is believed that the integrity of the DSTs and transfer pipelines can be maintained.

2.1 TANK INTEGRITY PROGRAMS

The primary thrust of the IQRPE review is to independently confirm the integrity of the DSTs, and to review and make recommendations related to the corrosion control programs, such that the effective life of the DSTs can be extended. This report is focused on the corrosion control programs, and in particular the corrosion monitoring techniques, which are being used to detect the onset of corrosion.

It is important to draw a distinction between "inspection" and "corrosion monitoring." When a tank is inspected, its integrity can be assessed. The size and significance of defects would be determined, using a myriad of different techniques. Since it is not possible to conduct direct visual inspections of the interior of the tanks, videography is used. The thickness of the shell is assessed, using ultrasonic techniques. By reviewing the ultrasonic survey data, the overall

integrity of the DSTs can be determined, provided enough data is gathered. Thus the inspections provide "snap-shots" in time, which document the integrity of the DSTs and justify the continued operations.

Unfortunately, it is quite a difficult and expensive process to insert crawlers into the annulus between the tank shells and measure the remaining wall thickness. As such, many years could pass between successive ultrasonic inspections of individual tanks. If corrosion were to become active between inspections or occur in areas where the UT crawler cannot be deployed, there could be significant corrosion damage before being detected. Such corrosion damage, i.e., loss of base metal, cannot be replaced to extend the life of individual tanks. As such, it is imperative to detect the onset of corrosion, and to be able to implement corrosion control programs - before significant corrosion has occurred.

One approach is to install ultrasonic transducers at fixed locations on the exterior surface of a tank shell, and monitor for changes in thickness. Unfortunately, the resolutions associated with ultrasonic measurements are approximately 10 mils (1/100 inch). A more sensitive indicator for the onset of corrosion is through the use of intrusive metal coupons or electronic probes, which are placed within the potentially corrosive environment, i.e., the sludge/waste within the tanks. This report will discuss corrosion monitoring options that are available for Hanford, including the presently used electrochemical noise (EN) technique. This report will recommend Hanford supplement the present program for monitoring corrosion rates within the DSTs by also installing corrosion coupons and high-resolution electrical resistance probes. As with the present practice, such monitoring would be installed through risers at the top of the tanks, just like the present practice for installing EN probes.

2.2 MAINTAINING INTEGRITY OF TRANSFER PIPELINES

Hanford has recognized the need to maintain the integrity of transfer pipelines. Internal Memo 73510-95-017 "Double-Shell Tank Waste Consolidation and Retrieval Planning Base Case" dated August 29, 1995 provided the planning base for managing the tank farm waste going into the future. There are numerous details within this report regarding the transfer of solids and sludge, including reference to cross-site transfer lines. Attachment 1 of that memo describes the importance of waste consolidation, and identified issues associated with the transfers/operations.

For the consolidation of high-heat sludge, the issues poised included those related to having insufficient shielding in the valve pits AX-A, AX-B, and along the waste transfer lines. The memo also noted a high potential for the AY and AZ tank farm pit drain lines to plug with solids after waste is consolidated. One of the issues poised, regarding the transfer of transuranic sludges from SY-102 to East Area, is the high shear strength of that sludge. The high solids level suggests a potential for some erosion of the base metal within the pipelines during the transfers. This could reduce the integrity of the pipeline. Additionally, it is possible that under deposit corrosion could occur if some of the product remains within the pipeline.

The approach to maintaining the integrity of the transfer pipelines at Hanford is similar to the approach that would be used in other pipeline systems. The buried transfer pipelines are subject to both external corrosion and internal corrosion. Hence, the location and extent (depth of

penetration, axial length, and circumferential arc) of both external and internal corrosion must be determined through inspection techniques. The rate of progression of the external and internal corrosion would be determined through corrosion monitoring programs. Each are handled separately, as the corrosion mechanisms are different.

Whether the transfer pipelines are single wall pipelines or pipelines encased within larger diameter pipelines, the possibility of external corrosion should be considered. This would occur on the outermost surface, which would be in direct contact with the soil. The exterior surface of the casing around the transfer pipelines should be coated, and there should be cathodic protection systems to ensure the exterior surfaces do not corrode at the locations of holidays (holes within the external coatings) or other anomalies. [Since the transfer pipelines are encased, external corrosion could compromise the secondary containment if left unchecked. Note that the exterior surface of the inner pipe could also corrode if water entered the annulus space between the outer casing and the inner transfer pipeline. Water will pool at low spots. Hence, barriers must be maintained to prevent any such intrusion of water into the annulus].

It will be recommended that, from the perspective of external corrosion, the integrity of the encased transfer pipelines be assessed using a new process, which was recently approved by the Department of Transportation (DOT), Office of Pipeline Safety (OPS). External Corrosion Direct Assessment (ECDA) is a formalized process for confirming the integrity of pipelines, and has recently been accepted as an equivalent to using pressure testing (hydrotests) or in-line inspections with intelligent pigs. Since the transfer pipelines at Hanford do not have pig launchers and receivers, it is not practical to consider that option. It may be possible to conduct hydrostatic pressure tests of pipelines used to transfer radioactive wastes. However, a review of the procedures associated with one such transfer, did not call for hydrostatic pressure testing of the transfer line prior to that transfer of the radioactive waste. One consideration, which would make it less desirable to conduct hydrostatic pressure tests of transfer pipelines (or the pressure testing of the casings around the transfer pipelines, is the consequence of any failure. It may be necessary to excavate the entire length of the line to be able to visually find the location of the failure.

The recent DOT/OPS approval of the ECDA process allows the use of above grade instrumentation to locate holidays in the coatings and areas of possible external corrosion. Sections having the most severe indications would then be excavated to facilitate direct examination of the exterior surface of sections of the buried pipeline. The remaining strength and integrity of the pipeline would then be determined, based on the measurements of the indications. The process will be discussed in further detail in subsequent sections, but appears to be a practical approach for assessing the integrity of the pipeline from external corrosion.

IQRPE's note: document RPP-27097 provides and in-depth study on the feasibility of ECDA in the tank farms.

Consider the possibility of internal corrosion. The pipelines are used to transfer solids laden waste from one tank to another. Cleaning pigs are not used to ensure all material has been displaced from the pipelines, following each transfer. Hence, some of the product being transferred may remain at low spots along the transfer lines. Under deposit corrosion may result underneath areas of deposition. It is anticipated that air will enter the transfer lines, following

the transfers. Corrosion may occur from the combination of any water within the pipelines, as well as the presence of oxygen (until the oxygen is depleted). However, the chemical properties of the waste product being transferred, such as the high pH, may be unfavorable for the progression of the corrosion. Accordingly, a best practice will be identified that corrosion monitoring instrumentation (flush mounted coupons and ER probes) be installed on the transfer lines to detect the onset of corrosion. The installation of corrosion monitoring on the transfer lines will be discussed in further detail later. However, it should be noted here that the intent would be to install such monitoring on jumpers at the valve pits, rather than on the main lines.

3.0 INSPECTION AND CORROSION MONITORING METHODOLOGY

In theory the integrity of waste storage tanks can be determined by a thorough inspection programs, which survey 100% of the surface area of the tanks. This approach may be practical for inspecting the interior of storage tanks when the product can be completely removed, the tank (or vessel) can be thoroughly cleaned, and the interior can be inspected visually. The condition of interior coatings could be visually assessed. The ASME code requires visual inspections to be conducted once every seven years, but allows ultrasonic inspections to extend the period between visual inspections one cycle. The periodic inspections are essential to assessing and verifying the integrity of the tanks throughout the lifetime of the tanks. However, it is also best practices to install corrosion monitoring instrumentation within the tanks in order to be able to detect any changes in the corrosivity of fluids stored within the tanks, which could indicate the onset of corrosion and degradation of the tank's integrity.

3.1 PRACTICAL LIMITATIONS ON ABILITY TO INSPECT WASTE TANKS AT HANFORD

Unfortunately, it is very difficult to inspect the interior of the waste storage tanks at Hanford, Washington. The tanks will store radioactive mixed waste until long-term storage and containment programs have been implemented. It is not possible to clean the interior of the tanks and conduct direct visual inspections, since the radiation fields are too intense. Hanford has been using remote cameras as the best available inspection practices to visually inspect the interior of the tanks. However, there are limitations in the lighting and in the resolution. Hanford has used remote crawlers to position ultrasonic transducers and measure the remaining wall thickness for the inner wall of double shell waste storage tanks. This process requires the crawler to travel through the annulus between the shells. However, it is not possible to inspect 100% of the surface area, using ultrasonic techniques. The construction of the tank and the physical location of supports restricts the areas the crawlers can access. Hanford is using best available and most practical engineering practices. However, since videography and ultrasonic surveys are only conducted periodically, there needs to be more reliance on corrosion monitoring techniques to alert Operations of any changing conditions, which could indicate active corrosion that could result in the degradation of base metals and reduce the integrity of the tank.

3.2 INSPECTION PROGRAMS FOR ASSESSING INTEGRITY OF TRANSFER PIPING

Hanford has a network of piping for transferring waste products between tanks. The transfers are conducted routinely. A review of the procedures suggests the transfer lines are flushed with relatively small volumes of water following each transfer. However, the transfer procedures make no reference to the use of pigs for cleaning the pipelines by displacing any debris, which may have settled on low spots along the pipeline. Without pig launchers and receivers and a routine maintenance pigging program, the transfer pipelines could not be inspected, using in-line inspection vehicles, i.e., intelligent pigs. The companies who provide in-line inspection services will be very reluctant to allow one of their intelligent pigs pass through the transfer lines, since the pig would become contaminated, and subsequently could not be used for inspections at other facilities. Thus, it is highly unlikely that the transfer lines could be inspected, using in-line inspection techniques.

A leak or failure of the encasements around the transfer lines could be quite significant, and would undoubtedly interrupt the schedules for transferring and consolidating of waste products. Consequently, there needs to be an alternate methodology for inspecting the external surfaces of these encasement around the transfer pipelines, such that their integrity can be assessed. Although hydrostatic pressure tests can be conducted to demonstrate integrity, there may be some hesitation for conducting such tests. Each test imposes stresses on the pipeline materials, and may allow any pre-existing (as of the time of the pressure test) defects to grow. If the pipeline fails, the site of the failure will have to be determined prior to repairing the encased pipeline, and this could require the excavation of the entire pipeline.

The exterior surface of the encased transfer pipelines (the encasement) can be inspected by above grade (ground) instrumentation. Then, only small sections of the pipelines would need to be excavated to allow the direct examination of the exterior surface.

IQRPEs note: document RPP-27097 provides an in-depth study of the feasibility of using above ground assessment of buried piping.

3.3 HISTORICALLY CORROSION RATES HAVE BEEN CALCULATED FROM CHEMICAL ANALYSES

Although corrosion monitoring has been important to Hanford Operations, the use of corrosion monitoring instrumentation was never the priority. Instead of installing corrosion monitoring instrumentation throughout the facilities, the approach was to collect fluid samples, analyze them, and match the compositions to a matrix of chemical compositions and the corresponding corrosion rates, which was based on extensive laboratory testing. This follows the methodology developed at the U.S. Government's Savannah River facilities. This approach has worked successfully over the years, as evidenced by the overall integrity of the systems at Hanford. Part of that success may be related to the historically low corrosion rates at Hanford. However, due to the complexity and expense associated with the collection and analysis of the radioactive fluids/waste products, the number of chemical analyses, which can be conducted, is

limited. Another approach to determining the corrosion rates is needed. This document will identify as a best practice, the continued use of chemical analysis as one tool for predicting and quantifying the severity of corrosion, i.e., determining the corrosion rates. It is also a best practice that intrusive corrosion monitoring coupons and instrumentation be installed to provide additional direct measurements of the corrosion processes and determine the corrosion rates within the waste storage tanks and transfer pipelines. The specific monitoring instrumentation will be presented in later sections.

3.4 PURPOSE OF CORROSION MONITORING

The purpose for monitoring corrosion is to be able to detect active corrosion processes before the processes have proceeded to the point where the integrity of a system is compromised. This is achieved by placing the corrosion monitoring coupons or electronic detectors (sensor element) directly into the corrosive fluids or waste products. It is essential to have detectors, which are sensitive, and can detect both short term (hours/days) and long-term trends (90-180 days). Electronic probes should have reasonable lifetimes (multiple months) before needing to be replaced. (By virtue of the low corrosion rate which have been reported recently, the probes would be expected to have long service lives before needing to be replaced.) Historical databases would be used to document trends over multiple years. The monitoring equipment must also be installed at the appropriate locations as to be able to detect the most severe corrosion within the process systems.

The text in Section 4 will present routinely used inspection methodologies, which are used for determining the extent of corrosion to the base metal, and, hence, the integrity assessments. Section 5 will describe different types of corrosion monitoring coupons and electronic probes, which are used when measuring corrosion rates, and which can be used to estimate when the system integrity will be reduced below the operating specifications.

4.0 OVERVIEW OF INSPECTION METHODOLOGIES

Inspection techniques are used to determine the extent of any corrosion damage and the results are used in the integrity assessments. There are numerous inspection techniques, which are available and can be used to assess the integrity of storage tanks and transfer piping.
These include ultrasonics, magnetic flux leakage, and X-ray radiography. These techniques are essential for determining the present condition of the system, and the extent of any existing corrosion. However, as will be shown, the inspection techniques do not have the resolution, which is available by installing corrosion monitoring instrumentation directly into the process fluids (stored waste). The goal is to maintain the integrity of the systems, while at the same time extending the life of the facilities. The approach is to use corrosion monitoring to detect the onset of corrosion, such that corrosion control measures can be initiated. The corrosion monitoring would be used to confirm the effectiveness of corrosion mitigation (control) programs before significant damage has occurred to the base metals. The inspection programs would complement the monitoring programs by periodically confirming the integrity of the

systems. [Videography is used by Hanford for locating areas of corrosion. However, videography cannot determine the extent (depth) of corrosion damage to base materials. As such it cannot be used directly for assessing system integrity].

4.1 ULTRASONICS

Perhaps the most widely used methodology for assessing the integrity of base metal is the measurement of the wall thickness, using ultrasonic transducers. This technique requires that a transducer transmit a sound wave through metal, and then listen for the echo return. The delay in time before the echo is received is (generally) a measure of the thickness of the metal. An exception would be for the special case of when the metal has an inclusion within the wall thickness. The arrangement is illustrated in most simplistic form in Figure 1 below.

Ultrasonics typically provides a resolution of ten mils, or 10/1000 inch. Thus, at least 10 mils damage must occur to the base metal before the corrosion could be detected. If the corrosion rates were 100 mpy, then corrosion would become detectable within just 36 days. If the corrosion rates were 10 mils per year (mpy), then the corrosion processes would have to continue for a full year before they would become detectable. However, the actual corrosion rates, which have been measured within the DST using LPR techniques, were found to be less than 1 mil per year. Thus, at the present corrosion rates, it could take over 10 years before corrosion would be detectable, using ultrasonic techniques.

Note that the damage to the base metal is permanent. Once the metal has been removed, it can't be placed back on the pipeline or tank/vessel, short of welding repairs. That is why corrosion monitoring instrumentation is needed. The monitoring can detect the onset of corrosion before the cumulative effects of the corrosion processes become detectable by the inspection techniques. Thus, the appropriate remedial actions can be implemented to stop or at least slow down (inhibit) the corrosion processes.

Figure 1. The Use of Ultrasonic Transducers.

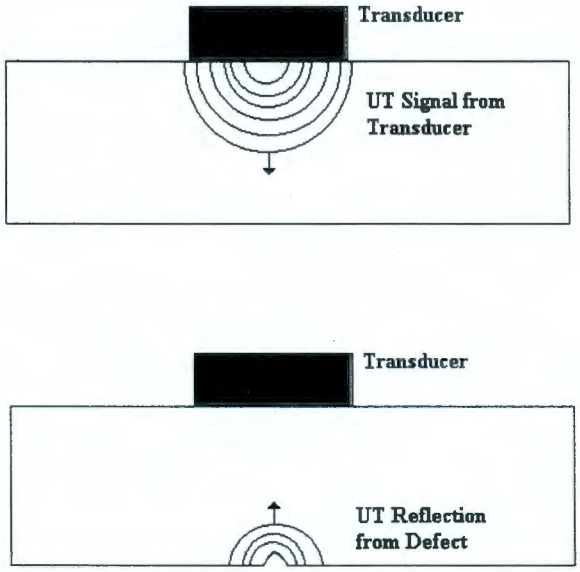

When making ultrasonic thickness measurements, a liquid (couplant) must be maintained between the ultrasonic transducer and the base metal that is being examined. Otherwise, the ultrasonic signals will not pass into or out of the base metal. The crawlers, which travel between the inner and outer shells of the DSTs, methodically move the ultrasonic transducers across the exterior surface of the inner tank within the DSTs. Thus, series of thickness measurements are collected over select areas, and any degradation to the interior metal surfaces can be determined. If the remaining wall thickness is significantly reduced from the original wall thickness, the strength and integrity of the tank might be reduced, again depending upon the extent of metal loss.

4.2 MAGNETIC FLUX LEAKAGE

Magnetic Flux Leakage (MFL) is an inspection technique, which is based on detecting variations in the magnetic field for locating the size and position of magnetic anomalies. MFL technology is most typically used for in-line inspections of pipelines, and is also used for inspecting tubing within heat exchangers. The magnetic fields saturate the base metal, and detectors look for variations in the magnetic fields, which may be indicative of corrosion. MFL techniques can also be used for inspecting the floors of tanks, which have been evacuated and cleaned. Figure 2 below illustrates the principals behind MFL inspections. Note that a powerful magnet saturates the pipe wall or base metal. One detector is located between the magnets, while a second detector is located behind the magnets. The first detector would be able to locate the size and extent of the electromagnetic field aberrations. The second detector, which is located behind the magnet, would detect the decay of the magnetic field with the passing of the MFL inspection tool, and by virtue of the signal strength, would determine whether the anomaly is on the interior or external surface of the metal. The magnets maintain constant contact with the base metal of

pipelines typically through wire brushes. (Note that if there is loose debris, the brushes could easily become contaminated).

In-line inspection tools, which pass through pipelines, will have numerous sets of magnets around the circumference of the inspection tool. The inspection tools, which pass through the small bore piping within heat exchangers, will have numerous channels, but nowhere near as many channels as inspection tools passing through large diameter pipelines. By virtue of which particular detectors report have found anomalies within the magnetic fields, it is possible to determine the azimuth (circumferential position) of individual corrosion indications.

Figure 2. Magnetic Flux Leakage.

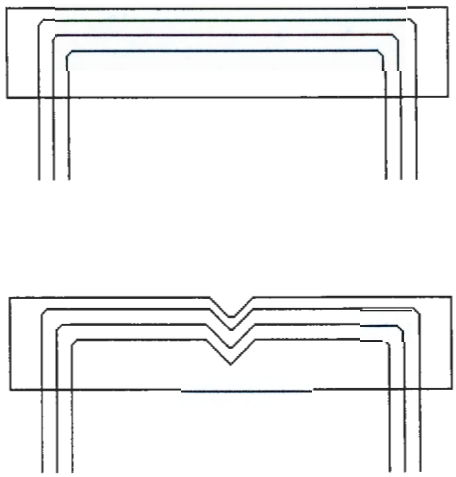

MFL inspection technology cannot provide as high a resolution as ultrasonic measurements. Typically, the resolution is of the order of magnitude of 20-25 mils, versus 10 mils for ultrasonic measurements. However, it is possible to inspect large areas of base metal very quickly, using this technology. MFL techniques are frequently used when inspecting pipelines, and tethered MFL tools could be used to inspect the transfer pipelines, provided the debris within the lines have been cleaned.

4.3 X-RAY RADIOGRAPHY

X-Ray radiography is a technique for inspecting localized areas on metals, where the wall thickness is sufficiently thin that a certain portion of X-ray signals on one side of the metal will penetrate through the metal, such that it can be easily detected on the opposite side. This is shown in Figure 3 below. In the technique, an X-ray source (natural or electronic) is located on one side of a piece of metal that is to be inspected. The X-ray film or electronic detector is located on the opposite side of the metal. When viewed, the bright spots on the image are indicative of areas with reduced wall thickness, since there is not as much base metal available for attenuating the signals. Typically, the technicians making the radiographs will place a step

wedge within the section of base metal being inspected, such that the person reviewing the radiographs can measure the relative densities of the signals, and calculate the depth of any indications.

Radiography provides a good pictorial image of the section of metal being examined. Unfortunately, however, each radiograph can only inspect a small area, such as 12"X18." Due to the time to set up for each radiograph, it is not practical to use this technique to survey the significant lengths of transfer pipelines. However, it is practical for inspecting localized areas of suspected corrosion. (X-ray inspections may be conducted for excavated sections of transfer piping, including encased sections of that piping, if they are not liquid filled, and the duration of the exposure period has been properly adjusted. However, it generally won't be practical to consider this inspection technique when assessing the integrity of DSTs.

Figure 3. Radiography Inspection of Metals.

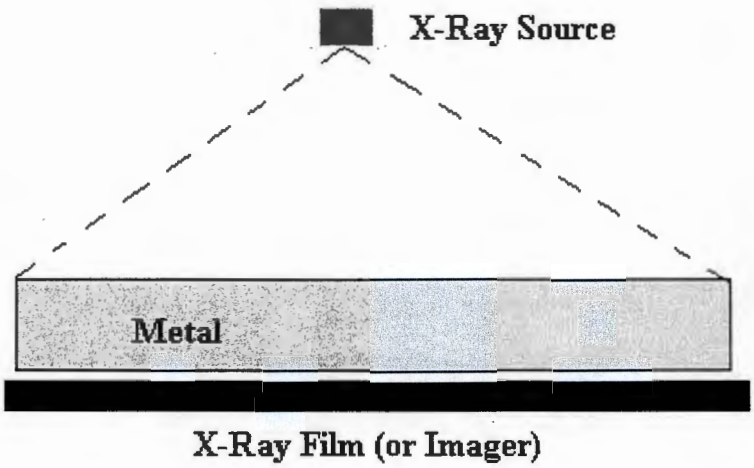

Radiography is less sensitive than ultrasonic techniques, and the resolution would be in the range of 25-30 mils. Thus, significant corrosion could occur to a pipeline or base metal of a tank before that damage would even be detectable using radiographic inspection techniques.

5.0 OVERVIEW OF CORROSION MONITORING OPTIONS

5.1 INTRUSIVE CORROSION MONITORING TO DETECT CORROSION WITHIN THE PROCESS FLUIDS

Inspection techniques are best used when collecting data used for determining the structural integrity of a pipeline, tank, or vessel. However inspection techniques cannot offer the resolutions necessary for early detection of the onset of corrosion mechanisms. Accordingly,

corrosion engineers rely upon intrusive corrosion monitoring for determining whether the corrosion mechanisms are active, or whether corrosion control programs are effective. By "intrusive," it is meant that the detectors or sensors used to detect corrosion must be located directly within the process fluids.

The corrosion monitoring instrumentation (coupons or electronic probes) is typically installed in pipelines through access fittings, which allow for the removal and replacement of the monitoring instrumentation without disrupting service or requiring any reduction from the system's operating pressure. It may not be practical to install new access fittings on existing transfer pipelines, since that would require welding and cutting on pipelines that contain residual quantities of radioactive products. Engineering studies would be needed before access fittings could be installed for encased transfer pipelines. However, it is practical to install access fittings on the jumpers at the valve pits. Accordingly, it will be an identified best practice that access fittings be installed on the jumpers for the transfer pipelines, such that corrosion monitoring can be installed on those pipelines. The corrosion monitoring for the waste storage tanks would be via probe or coupon holder assemblies installed through risers at the top of the DSTs. This is the case with the EN probes currently being studied at Hanford.

There are numerous options available for monitoring corrosion within the waste storage tanks and transfer pipelines. These include:

- Coupons
- Electrical resistance probes
- Polarization resistance and galvanic probes
- Hydrogen permeation probes
- Bioprobes
- Electrochemical Noise (EN/ECN)

5.2 METAL COUPONS

Perhaps the most widely used method for measuring corrosion rates is the use of specially prepared strips of metal. These would be inserted for a predetermined period of time, after which they are removed and cleaned to remove any corrosion products. The general corrosion rate is determined by measuring the loss of weight (mass) over the exposure period. Localized corrosion (pitting) rates are determined by measuring the depth of any pits on the coupons, which have formed over the exposure period. Commonly used coupons are discussed below.

5.2.1 Intrusive Flat Metal Coupons

Metal coupons have been the staple for corrosion monitoring from essentially the beginning of corrosion engineering. Metal coupons are essentially strips of metal, which are placed within the process fluids (environment) that are to be monitored. The coupons have a known surface area, and are fabricated from the same type of material of construction as the tanks or pipelines.

The coupons are inserted into the process systems for extended periods of time, such as 90-180 days, depending on the corrosion rates previously encountered. At the end of the exposure period, the coupons are removed, and any corrosion products are cleaned from the surface. NACE RP-0775 describes the cleaning process and methodology for analyzing coupon results. By comparing the initial weight to the final weight, the loss in mass can be determined. The reduction in mass, coupled with the surface area of the coupons, the density of the metal, and the exposure period can then be used to calculate the general corrosion rate. If pits are observed on the coupons after the coupons have been cleaned, the depth of the pits should be measured, using needle gages. These are spring-loaded dial gages attached to a fine point needle. By comparing the depth of a pit to adjacent base metal, which has not corroded, and the exposure period, it is possible to estimate the localized (pitting) corrosion rate. Note that this approach assumes pit initiation corresponds with the installation of the coupon into the process fluids.

Both the general and localized or pitting corrosion rates are used to characterize the corrosiveness of the environment being monitored. NACE RP-0775 includes guidelines, which help define "acceptable" corrosion rates, based on an industry consensus. For general corrosion rates, it is generally considered desirable to keep corrosion at less than 1 mil per year (mpy). Acceptable localized or pitting corrosion rates are generally those less than 2 mpy. However, the individual company operators may either raise or lower the acceptable range, based on the present extent of corrosion damage, the design criteria, i.e., the amount of material which can be lost while still being able to maintain system pressures, and the desired remaining life for the system.

Many oil companies and petrochemical plants install corrosion coupons throughout the production systems, and maintain databases to archive corrosion coupon results. It is also a common practice to retain the processed corrosion coupons within files, rather than to reuse individual coupons. The latter practice allows the corrosion engineers to reexamine the coupons at some time in the future, should it be necessary to look for patterns of attack or perhaps indications of erosion-corrosion. Per verbal comments, Hanford has reused the metal coupons, which were used in early testing programs. This is because the corrosion rates were extremely low. However, the cost of metal coupons is relatively low, and, consequently, it is best practice that metal coupons used in future tests be archived and kept in envelopes, which have been treated with corrosion inhibitors.

Figure 4 illustrates a representative corrosion coupon, such as might be installed within systems to be monitored. Note that insulating washers are used to prevent electrical shorts when the coupons are attached to the access fitting plugs or other coupon holders. Figure 5 illustrates other corrosion coupons, which are in common use. Thicker coupons have additional rigidity and support, which may be necessary if the coupons are installed at a point where flow could cause the coupons to vibrate and possibly fail from fatigue. The round, flat metal coupons are typical for flush mounts, as will be discussed in the next section. The stainless steel coupon on the right side of Figure 5, which has a number of holes, would be used to assess the propensity for scale deposition. If the holes become filled during the exposure period, then scale formation is likely.

Figure 4. Representative Corrosion Coupon.

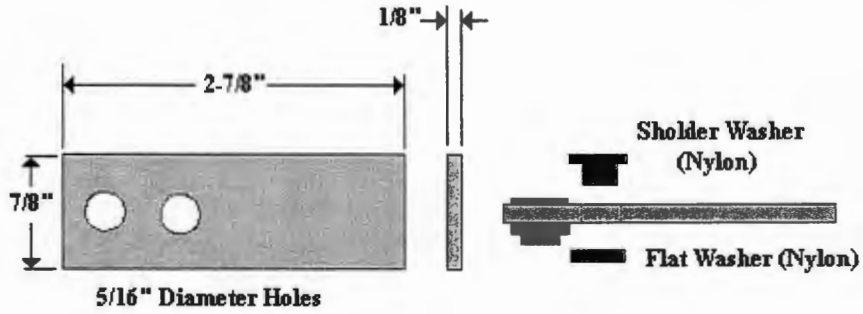

Figure 5. Different Types of Coupons.

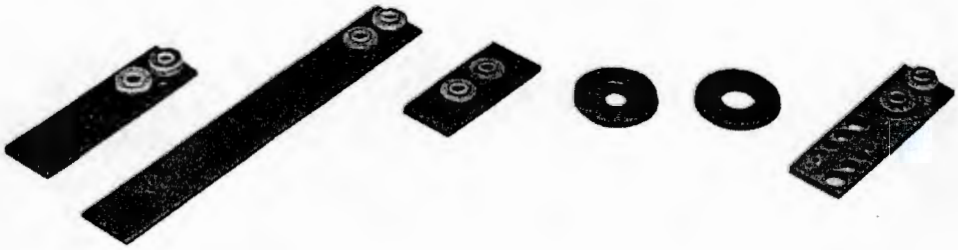

Figure 6 illustrates a coupon holder used to position the flat coupons within the process streams inside pipelines. It is anticipated that a similarly designed holder would be used to secure metal coupons onto a coupon holder assembly for installation into the DSTs at Hanford.

Figure 6. Coupon Holder Mounts onto Access Fitting Plug.

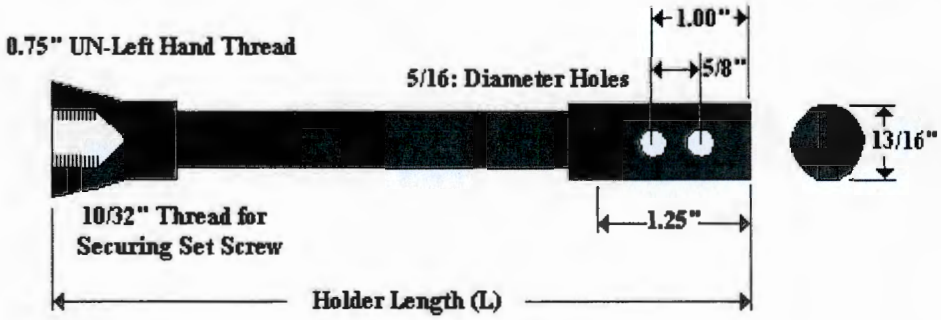

5.2.2 Flush Mounted Coupons

Round flush mounted coupons are often used for assessing corrosion along a pipe wall. The length of the coupon holders are either selected (or adjusted), such that the flat surface of coupons are physically even with the interior surface of the pipeline. Thus the use of flush mounted coupons makes it possible to measure any corrosion, which may be occurring along the pipe wall. Since the coupons are adjusted to be even with the pipe wall, there would be only minimal disruptions to the flow, caused by the presence of the coupons themselves. Figure 7 is a drawing, which illustrates flush mounted coupons and the coupon holder.

Coupons are typically made from the same type of material used to fabricate the pipelines. However, if erosion is considered to be a potential problem, metal coupons could be fabricated from an inert material that would not corrode in stagnant fluids, i.e., a stainless steel. Thus, any weight loss in an inert material, which occurs during the transfer of waste products through a transfer line, would be identified as erosion, rather than corrosion.

Figure 7. Flush Mounted Coupon and Coupon Holder.

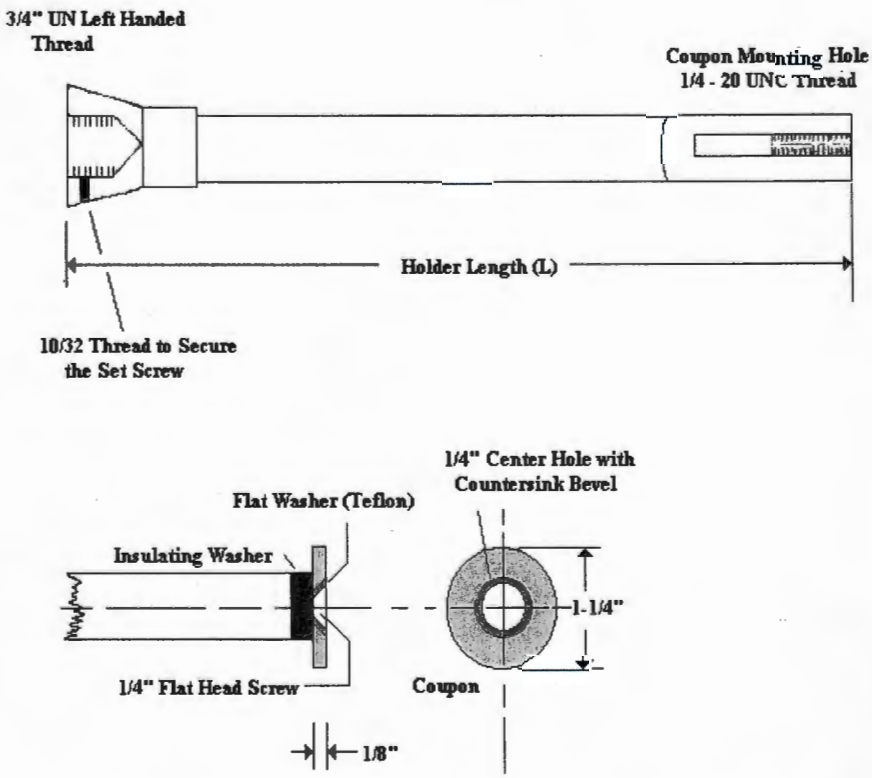

Figure 8 is a photograph, which depicts fixed and adjustable length flush mounted coupon holders. The holder on the right side is adjustable, such that the shaft length can be raised or lowered to ensure the coupon is positioned level with the pipe wall.

Figure 8. Coupon Holders for Flush Mounted Coupons.

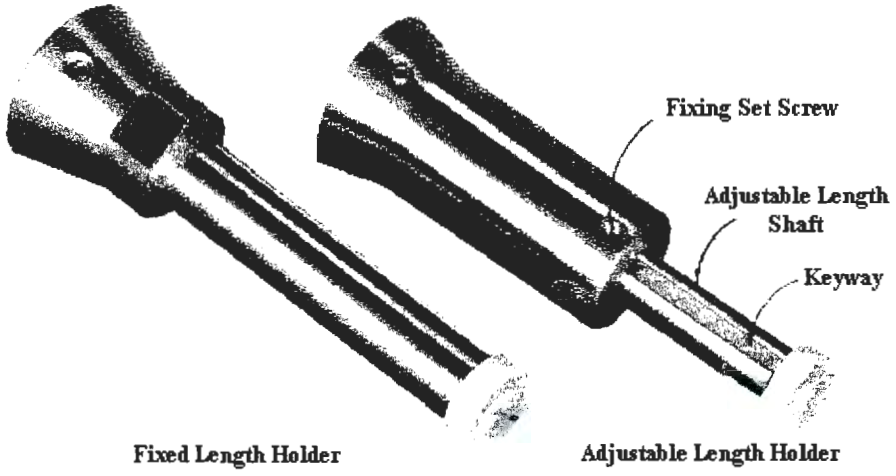

5.2.3 U-Bend Coupons

U-Bend coupons are thin strips of metal, which have been plastically deformed (mechanically bent) to the shape of the letter "U." The intrados, the interior surface of the U-bend, is under compressive forces, while the extrados, the exterior surface, is under tensile forces. The bending imposed forces beyond the yield point, and thus testing of U-Bends is rather severe.

Each U-Bend coupon is held together by the mounting holes at the ends. Teflon insulators are inserted through the holes, and the two ends of the coupons are bolted together, ensuring a continuing tensile load on the exterior surface of the coupon. The coupons are inserted into the process fluids, much like the flat metal coupons described above. They are most frequently used as a "go-no go" indicator for stress corrosion cracking, and as such should be used to determine if the propensity for cracking is a concern. It is a best practice that U-bend coupons be inserted into each of the DSTs, in addition to the flat metal coupons used for measuring weight loss and localized pitting corrosion rates.

IQRPE's note: SCC has been identified as a non-concern in the DST's per document RPP-RPT-28968.

5.2.4 Exposure Period

Coupons are typically left within systems for 90-180 day periods before they are removed and assessed. The specific exposure period selected is based on the corrosivity of the fluids. Since the corrosion rates within the DSTs at Hanford have been very low (much less than 1 mpy), it is recommended that the maximum exposure periods be 180 days. Note that this assumes the presence of electronic probes, which provide continuous documentation that no

unusual corrosion–related events occurred during the exposure period that might otherwise warrant a shorter exposure period.

There are several factors to consider when establishing the exposure period. When corrosion coupons are first inserted into the process streams, there will be a brief period of time when the corrosion rates are very high. However, as the corrosion processes continue, corrosion products and oxides will form on the surfaces, and these will slow the corrosion rates. There will also be some transfer of corrosion products away from the point of corrosion. Assuming steady conditions, the corrosion rates will reach equilibrium in time. Figure 9 illustrates how steady state corrosion rates are typically achieved in systems. Coupon exposure periods should be of sufficient duration that the time to reach equilibrium is a small fraction of the overall exposure period.

If the corrosion rates are very high, it will take a shorter period of time to reach equilibrium. However, if the corrosion rates are very low, then it may take longer to reach equilibrium, and the exposure periods need to be much longer in order to obtain valid results. Since there is an impetus to collect and review the data for indications of corrosion, exposure periods should not exceed one half year, i.e., 180 days. One of the reasons for placing an upper limit to the exposure duration is to minimize the consequences from any unexpected corrosion attack. By coupling a coupon monitoring program with a program for electronic measurements of corrosion rates, there will be an assurance that there were no unexpected corrosion events, which if left untreated could degrade the integrity of a system.

Figure 9. Example -Corrosion Rate Reach an Equilibrium with Exposure Time.

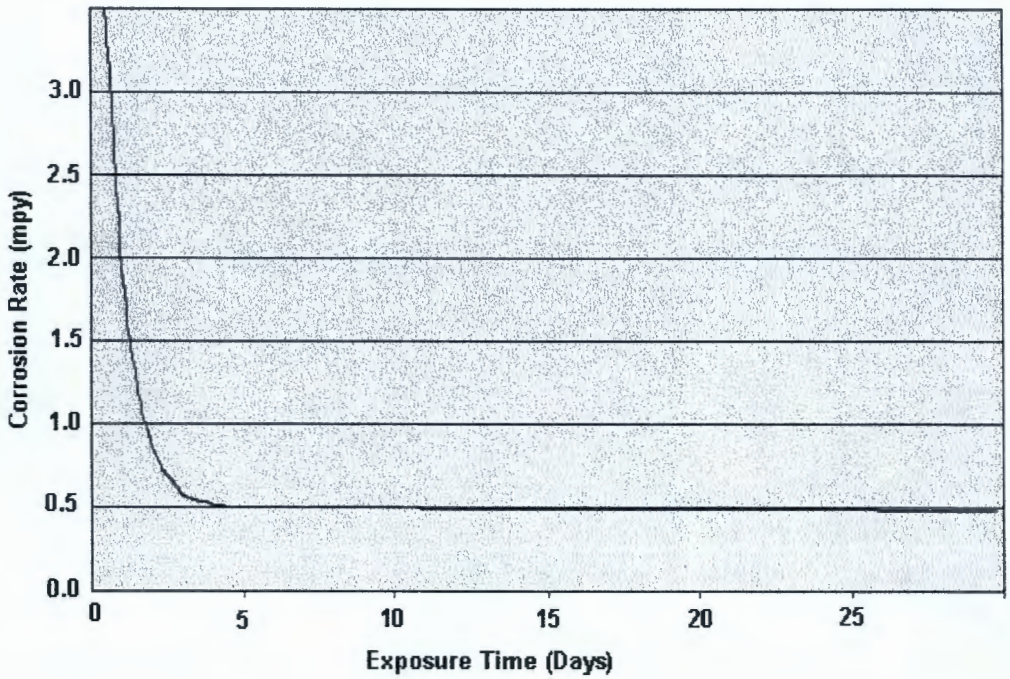

5.3 ELECTRICAL RESISTANCE PROBES

Electrical resistance probes are electronic probes, which can be used to measure corrosion rates within a system on a near real-time basis. Electrical resistance probes function by measuring changes in the electrical resistance of the probes. The minute changes in resistance are related to changes (reductions) in the surface areas of the electronic probes, which are caused by the corrosion processes. Figure 10 illustrates the appearance of a number of different styles of electrical resistance corrosion probes. Note that the strip loop or tubular loop probes have the greatest surface area to element, and as such are the most sensitive. However, they have a shorter service lifetime. The cylindrical probes are the most stout, and have a longer service life. Thus, the selection of electrical resistance probes has historically required a tradeoff between sensitivity and functional lifetime.

Figure 10. Different Styles of Electrical Resistance Probes.

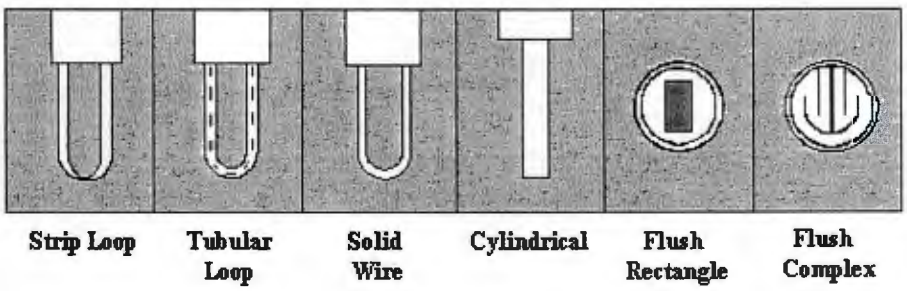

Corrosion rates are obtained by comparing two successive measurements (readings), separated by a discrete, known period of time, such as one hour or one day. Note that the probe elements are kept within the environment being measured, and as a consequence, will degrade if corrosion is active. Each reading will measure the change in resistance, which has occurred since the last reading, and consequently will record the cumulative effect of corrosion versus time. This is in sharp contrast to the Linear Polarization Resistance technique, in which each corrosion measurement is independent of all previous readings.

Note in Figure 10 above that the electrical resistance probes can be designed in a flush mounted configuration. The two probe designs on the right side of the figure are flush mount designs, and would be used when (a) there is a very low quantity of liquid passing through a pipeline, or (b) when it is desired to study the corrosion rates at the pipewall, rather than within the process stream, where the fluid velocities would be greater than that immediately adjacent to the pipewall.

5.4 HIGH RESOLUTION ELECTRICAL RESISTANCE PROBES

As noted above, there has historically been a tradeoff between the sensitivity and functional lifetime of electrical resistance probes. However, in the last few years two high sensitivity versions of electrical resistance probes have been introduced. These are the MicroCorr and the

Ceion® probes. The primary difference between these new generation probes and electrical resistance probes, as described above, has been improved electronics to better control residual temperature noise within the probes.

The MicroCorr probes suppress residual temperature noise by virtue of the design of the probe and the associated instrumentation. The exposed and reference electrodes have been thermally coupled to minimize electronic noise, while the drift of the electronic amplifiers has been minimized. In contrast, the Ceion probes record the temperatures, and use mathematical algorithms to correct for the resistance ratios.

To provide a perspective for the improvement in sensitivity, consider ER and High Resolution ER probes having a 5 mil element thickness. ER probes will be able to detect a 1 mpy corrosion rate in approximately 11 hours, while it would take approximately 15-30 minutes for the High Resolution probes to detect the same corrosion rates.

If the corrosion rates within the waste storage tanks were higher than the 1 mpy and subject to significant swings, it would be recommended to use high-resolution ER probes to detect the onset of corrosion. However, considering the relatively low corrosion rates which have historically been reported for Hanford's waste storage tanks, traditional ER probes should provide more than adequate warning for changes in the corrosion rate.

Note that the high-resolution electrical resistance probes typically have an electronics package mounted on the probe assembly. The package would be in the shape of a cylinder, approximately three inches in diameter, and approximately two inches in height. The position of the electronics circuitry is essential to minimizing electronic noise and achieving the high resolution. The probe manufacturers will need to be consulted to determine the consequences of relocating the electronics package further from the probe elements with respect to the possible increase in electronic noise and loss of high resolution. If the losses are low (manageable), then it may be possible to install high-resolution electrical resistance probes on the probe assembly inserted into the different DSTs. Otherwise, regular electrical resistance probes could be used in conjunction with electrochemical noise probes (Section 5.8) and corrosion coupons for monitoring corrosion within the supernate and sludge in the DSTs.

® Ceion is a registered trademark of Cormon Limited, Limited Liability Corporation, United Kingdom, England.

Figure 11. Microcorr – A High Resolution Electrical Resistance Probe.

5.5 LINEAR POLARIZATION RESISTANCE

Linear Polarization Resistance (LPR) is another technique to measure corrosion rates. Unlike electrical resistance probes, each LPR measurement of the corrosion rate is totally independent of any previous readings. It is a sensitive technique, but provides no indication of any transient corrosion events, which may have occurred between measurements.

There are two basic styles of LPR probes – those with three elements and those with two elements. Consider first the three-element LPR probes. The three elements are the reference, test, and auxiliary electrodes. Figure 12 illustrates the electronic circuitry associated with the three-element probe. A potential difference of 10 mV is imposed between the reference and test probe elements. Then the resulting current is measured between the auxiliary and test electrodes. Since corrosion is an electrochemical process, the resulting change in current is related to corrosion rates through the Stern-Geary equation.

Figure 12. Three Element Linear Polarization Resistance Probe.

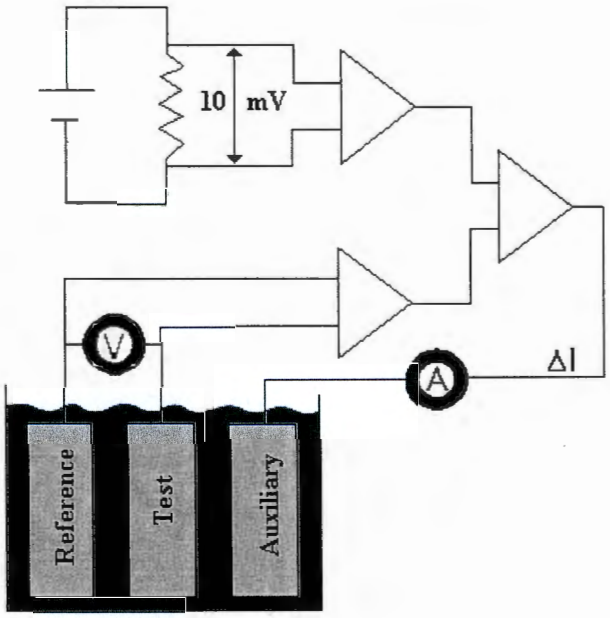

The two-element LPR probes function similarly to the three-element LPR probes. However, two-element LPR probes must include electronic circuitry to compensate for the IR drop. Figure 13 shows the electronic circuitry associated with a two-element LPR probe, while Figure 14 illustrates two and three element LPR probes. The electronic circuitry, which compensates for the IR drop in the two element LPR probes, works best in highly conductive fluids.

Figure 13. Two Element Linear Polarization Resistance Probes.

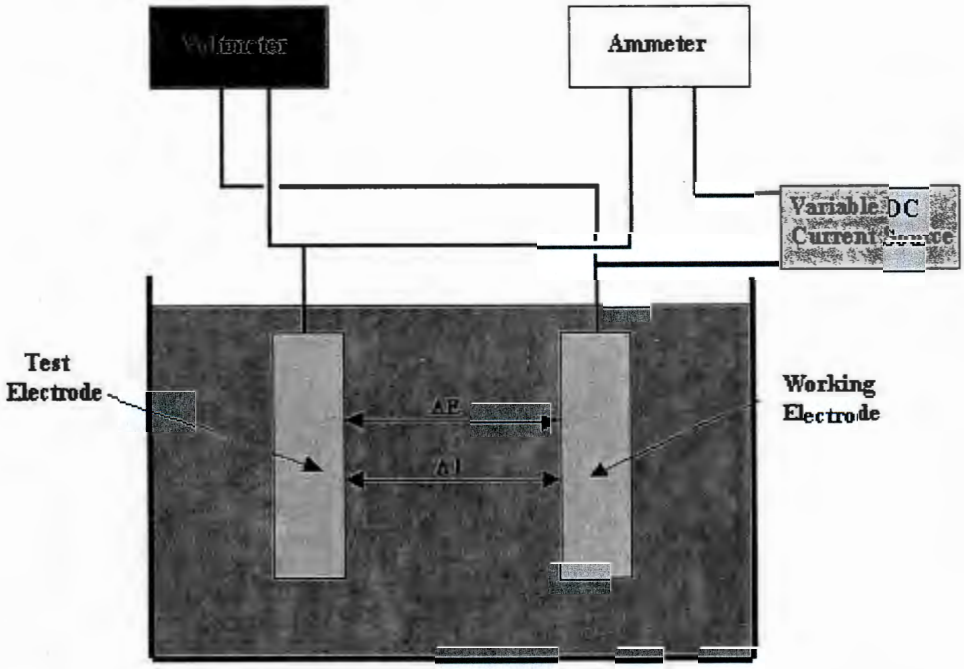

Figure 14. Photographs of Two and Three Electrode LPR Probes.

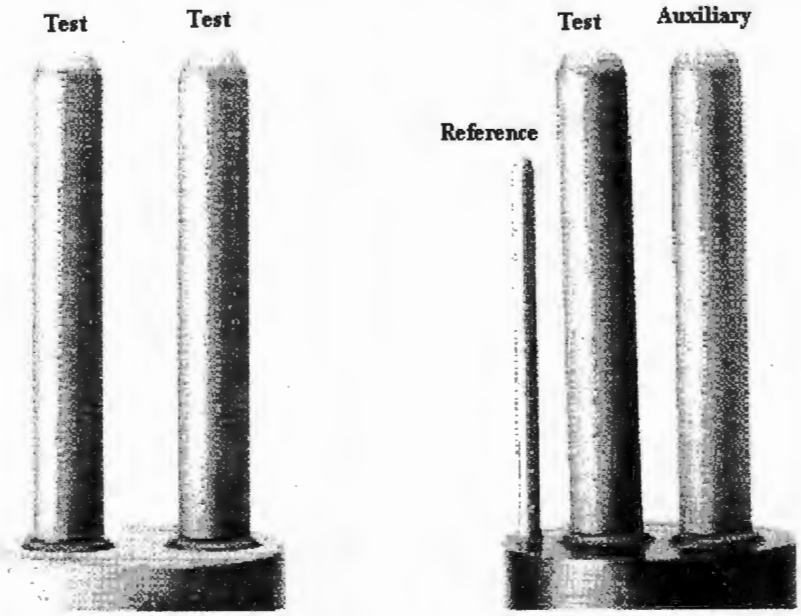

Two Electrode LPR **Three Electrode LPR**

5.6 AUTOMATIC DATA COLLECTORS TO MEASURE AND RECORD ELECTRONIC PROBE DATA

Usually it is not convenient to go out to corrosion probes installed within process systems, and take the measurements. Accordingly, it is most convenient to attach the electronic corrosion probe to a device, which will automatically measure and record the data, which yields the corrosion rates. The manufacturers of the electronic corrosion probes use different names for the automatic or remote data collectors/data loggers, and there are different types of collectors, depending upon whether the corrosion probes use linear polarization resistance (LPR), electrical resistance (ER), or high-resolution electrical resistance techniques. Nevertheless, from the perspective of the user, there are many common features the automatic data loggers share.

Corrosion probes are typically read at regular intervals, such as once an hour, once a day, once a week, or once a month. This can be done manually, or through the use of automatic (or remote) data loggers. The data loggers are battery powered electronic units, which are connected to the corrosion probes, and can be programmed to automatically measure and record the probe readings at preset time intervals. The automatic data collectors are typically mounted near the corrosion probes, such that the electrical cable between the two units is approximately 10 feet in length. By measuring changes in the electrical resistance for ER or high-resolution ER probes over time, the corrosion trends can be established, and the consequences of any transient corrosion event would be recorded by virtue of changes in the electrical resistance. However, if an automatic data collector/logger is connected to an LPR probe, the unit would record each (independent) measurement of the corrosion rate within the system.

Figure 15 brings the three key points of the systems together, and is illustrative of both ER and LPR based systems. Note the electrical probe that is installed into a pipeline through an access fitting. A wire leads from the end of the corrosion probe to the automatic data logger. The corrosion probe measurements are stored within the automatic data collector, and a hand held unit is physically connected to the automatic data collector in order to download (transfer) the data. That data in turn is taken to a computer for processing/analysis to determine the corrosion rates and trends.

One of the advantages of using a battery powered data collection system, such as described above, is that it could be installed an operating at a much lower cost than electrochemical noise systems, which require extensive telecommunication networks and computer systems. The automatic or remote data collectors have been used extensively in oil production systems for monitoring corrosion within those systems, and they have been found to be quite dependable.

It would be quite easy to set up similar systems to monitor corrosion within the double shell waste storage tanks and transfer pipelines at Hanford. Consider first the use of automatic data collectors in conjunction with the waste storage tanks. Corrosion probe assemblies would include both electrical resistance probes and electrochemical noise probes. The wire leads from the electrical resistance probes would go from the top of the probe holder assembly to the automatic data collectors. Instrument technicians could then go directly to the above ground data collector, and retrieve the recently collected corrosion probe data. (Multiple channel units are available, which enables the use of several probes installed at different levels within the supernate and sludge pile. Note that if for any reason the automatic data collector failed, the

corrosion probe can be read directly by the hand held data logger, which is used to download data from the automatic data collector. A similar arrangement would be used to record, archive, and retrieve corrosion monitoring data from a monitoring point located on the transfer lines, using a corrosion probe installed through an access fitting located on a jumper within the valve pit at a tank farm.

Figure 15. Probe, Data Collector, and Hand Held Data Logger.

5.7 ELECTROCHEMICAL NOISE (ECN) TECHNIQUE FOR MONITORING CORROSION

Electrochemical Noise (ECN) is a relatively new monitoring technique compared to the use of coupons, or electrical resistance or linear polarization resistance probes. In this technique fluctuations in electrochemical potential and current are the key to the monitoring technique. Electrochemical potential noise is the fluctuation in the potential of an electrode relative to a reference electrode, while the electrochemical current noise is the fluctuations in the current. The probe arrangement is a three-probe arrangement, similar to that depicted in Figure 13 and the right photograph on Figure 14.

Although difficult to interpret, the measurement of electrochemical noise is relatively simple, and uses the same three-probe assembly as used for LPR measurements. However, there are major differences in the collection of the data and interpretation of results. In the ECN technique, no current or potential differences are applied between the electrodes. However, sensitive electronics are used to measure the minute changes in current and voltage between the electrodes, and that data is recorded continuously. The short-term fluctuations in current and potential are indicative of the corrosion processes, such as the formation of corrosion product films.

NACE International has published books, such as "Electrochemical Impedance and Noise" by Robert Cottis and Stephen Turgoose (1999), which attempts to explain intricacies associated with using the EN/ECN technique and the interpretation of results. The authors note that, whereas some analyses can be simple, others can be very difficult to interpret. Their book includes examples, which illustrate pit initiation, propagation, and the re-passivation of a pit. There are also extensive discussions of statistical methods that are employed to help recognize the patterns and interpret results. The reader is referred to that and other books for a tutorial on the use of ECN techniques for monitoring corrosion.

The manufacturers of the EN instrumentation have made extensive efforts to attain an industry acceptance of the technique. EN has been used for many laboratory studies of corrosion. There have been efforts to use the technology for monitoring corrosion within crude oil production systems, which represents one of the largest markets for using corrosion monitoring instrumentation. However, with the exception of a few companies, there has been only limited deployment of EN technology outside of laboratory settings. The first reason is that use of the EN technique can be very data intensive, and require the collection and review of enormous quantities of data. This necessitates an electronic review of the data. Second, the monitoring (EN) probes must be installed at key locations throughout the system being monitored. Thus extensive telecommunications systems are necessary, in order to be able to automatically collect the data. That can be very expensive. Third, there can be many sources of interference in operating systems (including pipeline transfer networks) – much more so than laboratory systems, where the variables can be more closely controlled. As such, it can be very difficult to identify the events that are directly related to the corrosion processes.

There are only a limited number of individuals worldwide, who have the experience to properly interpret ECN results. Consequently, it is recommended Hanford have several personnel available, who have been properly trained and experienced to be able to use this monitoring technique. It should also be used in conjunction with other "classical" monitoring techniques, such as the use of coupons or ER/LPR probes, which are more straightforward to interpret. This will ultimately establish a confidence in the technique. By virtue of obtaining similar results from independent monitoring techniques, the results from each are validated.

5.8 ACCESS FITTINGS

Access fittings are specially designed threaded fittings, which will allow access to the interior of a pipeline, tank, or vessel. Consider the case of access fittings on pipe as an example of how

they are installed and function. When access fittings are initially installed, the body of the fitting is welded onto the pipeline, and the integrity of the weld, which is between the pipeline and the body of the access fitting, is confirmed. Then a service valve is mounted onto the exterior of an access fitting through the outer threads. A retrieval tool is attached to the side of the service valve, which is away from the pipeline. When the service valve is opened, a special cutting tool is used to cut a 2-inch diameter hole through the exterior surface of the pipeline. This allows access to the interior of the pipeline through the access fitting. Once access has been obtained, the cutting tool is removed, and a threaded plug is inserted into the interior of the access fitting, again using the retrieval tool. The threaded plug can be modified to hold corrosion coupons or electronic probes within the pipeline.

Figure 16 is a drawing to illustrate an access fitting on a pipeline. This close-up illustrates the exterior threads, which accommodate the service valve, as well as interior threads for the central plug. Figure 17 is a drawing that illustrates an access fitting on the bottom of a pipeline, which is holding a flush mounted corrosion coupon parallel with the bottom of a pipeline. The blue color illustrates water, which may remain within a pipeline, following the flushing of a line, particularly for low spots along the pipeline.

It will be recommended that access fittings be installed on the jumpers of the transfer pipelines. This location is practical, and would facilitate monitoring of potential corrosion along those pipelines. Note that the access fittings would be welded onto new jumpers – not previously used jumpers, which may have traces of radioactive contaminations. It is not recommended to consider installing access fittings through encased transfer piping.

Figure 16. Illustration of an Access Fitting.

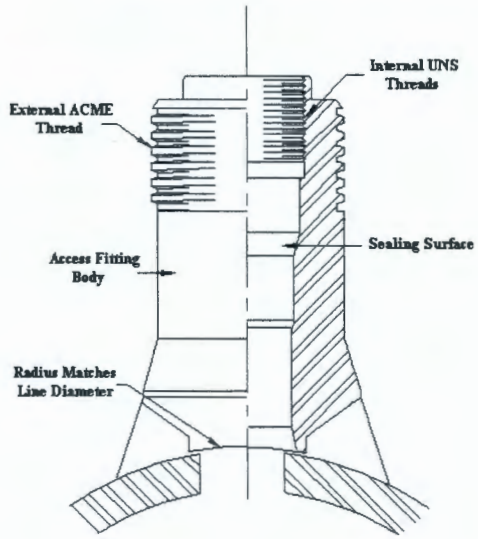

Figure 17. Flush Coupon Mounted Even With the Bottom of Pipe.

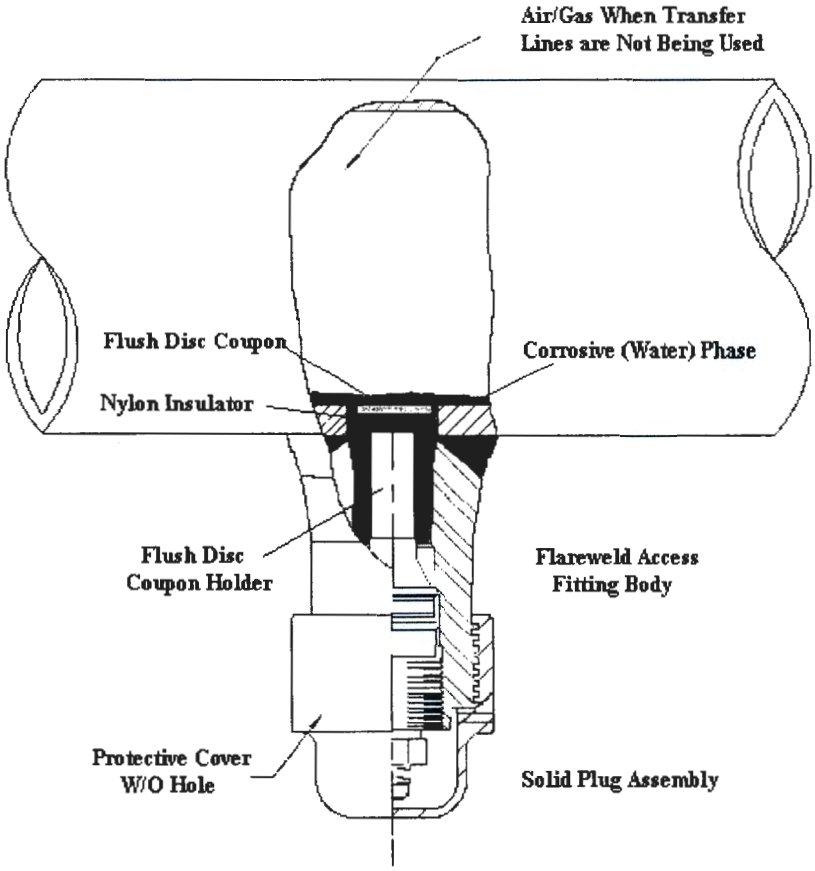

Figure 18 illustrates the extraction tools used to remove the plug assemblies, from the access fittings. Note the location of the service block and the different positions for the outer and inner barrels of the retrieval tool, when installing or removing a plug. The two man crew assigned to remove coupons would need approximately six (6) feet clearance in the axial direction from the access fitting to safely remove and replace coupons or probes. Figure 19 illustrates an operator using an extraction tool.

Figure 18. Service Valve and Retrieval Tool.

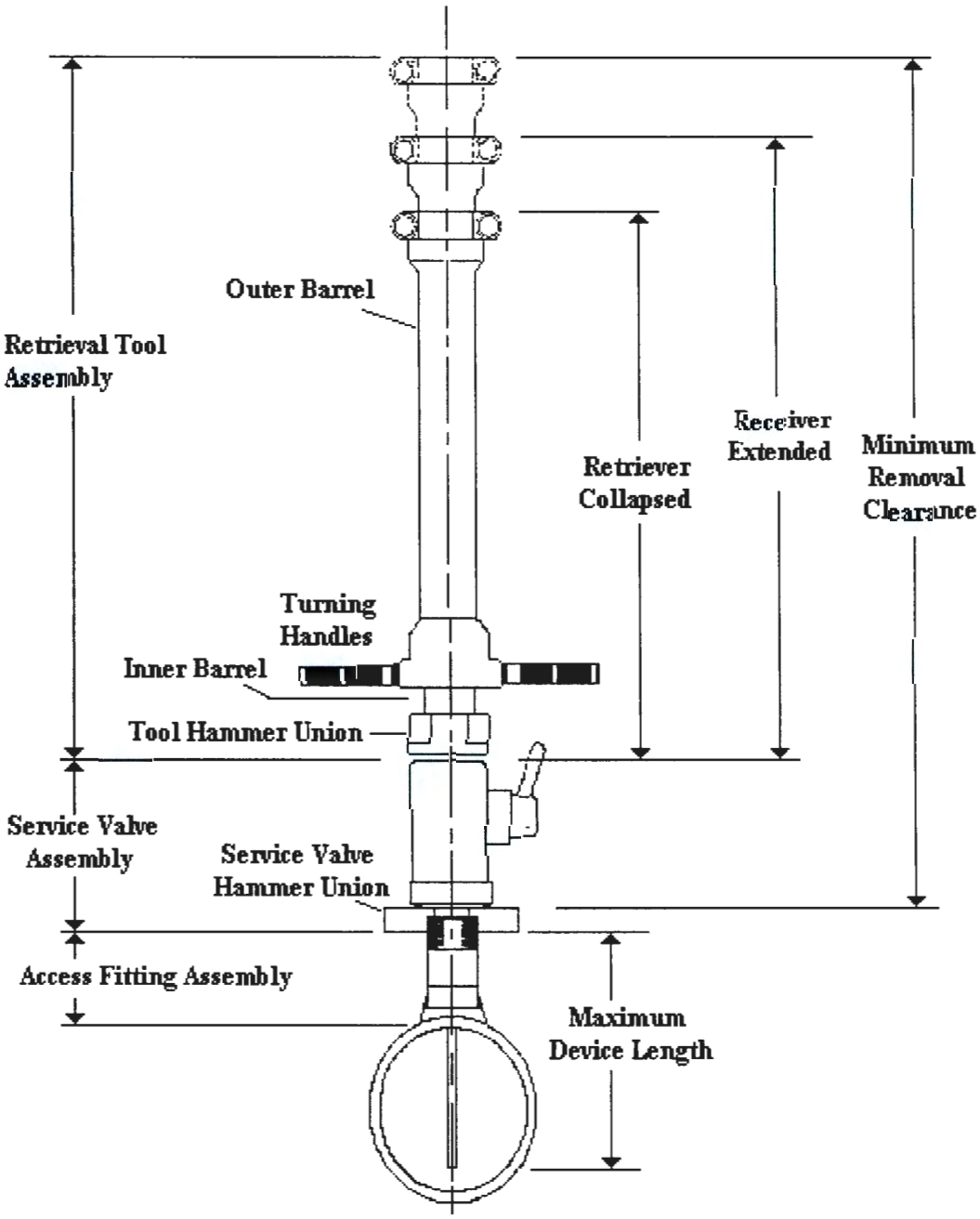

Figure 19. Accessing the Pipeline Through Retrieval Tool and Service Valve.

6.0 METHOD FOR ASSESSING THE INTEGRITY OF TRANSFER PIPELINES FROM EXTERNAL CORROSION

It is imperative that the integrity of the transfer pipelines be maintained – both from the perspective of external corrosion and internal corrosion. The corrosion monitoring, as discussed in Section 5, can be used to help determine the extent of any internal corrosion along the pipelines. Section 6 will address external corrosion, which can occur on the exterior of the transfer pipelines at Hanford.

Consider the control of external corrosion on the exterior surface of the transfer pipelines. Although pipelines may have been externally coated, the coating by itself does not ensure the

integrity of the pipeline. The coating could have degraded after many years of service. There may be holes in the coatings, i.e., holidays, which would allow corrosion to occur at these unprotected locations. Depending upon the adhesion properties, water could migrate underneath the coatings, and cause much more widespread corrosion attack. Indeed, there are many factors, which could potentially degrade the exterior surface of the transfer pipelines, and ultimately affect the integrity of those lines.

Cathodic protection systems are often used in conjunction with coating systems. Impressed current or sacrificial anode cathodic protection systems can help protect the buried pipelines and prevent the corrosion processes from being active at the locations of holidays. As such the status of both the protective coatings and cathodic protection systems should be part of the review and assessment of the condition of buried transfer pipelines.

The pipeline service companies, who service the liquid and gas transmission and distribution pipeline companies, have developed a number of tools and techniques for inspecting buried pipelines to determine whether external corrosion processes may or may not be active. Some of those inspection techniques can be used at Hanford for verifying the integrity of the transfer pipelines from the perspective of external corrosion.

The following sections will present an overview of the approaches, which industry has adopted for inspecting and preventing buried pipelines from failures related to external corrosion. There will be a overview of the legislative rules and regulation, which have "driven" the pipeline industry to implement programs, which mandates inspection for pipelines transferring hazardous liquids or gas. This will be followed by discussions regarding the use of pressure tests and in-line inspections of pipelines. These are the tools, which have historically been used to confirm the integrity of pipelines. It seems neither wise, nor practical to use either (hydrostatic) pressure tests or intelligent pig inspections to confirm the integrity of the transfer pipelines at Hanford. However, the pipeline industry and Federal Government has accepted a new inspection technique termed External Corrosion Direct Assessment (ECDA), as an approved method for confirming the integrity of buried pipelines. These indirect inspections use the tools which were previously developed for verifying the effectiveness of cathodic protection systems or for locating flaws within the external coatings of buried pipelines. It is possible Hanford could utilize this recently approved technique for confirming the integrity of the buried transfer pipelines at Hanford. Consequently, an overview of the methodology is presented.

IQRPE's note: document RPP-27097 provides an in-depth study on the feasibility of various above-ground assessment techniques.

6.1 HISTORICAL RULES FOR MAINTAINING PIPELINE INTEGRITY FROM EXTERNAL CORROSION

Over the last few decades, there have been a number of incidents along the pipelines that transport natural gas and hazardous liquids across the United States. Some of the incidents resulted in their death of individuals, who were near the buried pipelines. Consequently, the U.S. Government drafted regulations and rules to improve the safety to individuals and to reduce

risks for environmental damage. The Natural Gas Pipeline Safety Act of 1968 directed the U.S. Department of Transportation (DOT) to establish minimum federal safety standards for the transportation of natural gas. These regulations used the ASME Code for Pressure Piping B31.8, to maintain the integrity of the buried pipelines. Similar rules were drafted for the Transportation of Hazardous Liquids by Pipelines." The rules have been used over thirty years to govern the operation of pipelines transporting hazardous materials. The primary methods for verifying the integrity of the pipelines was to conduct hydrostatic pressure tests or run intelligent pigs through the pipelines.

The regulations have been further amended recently to further enhance safety following other pipeline incidents. Risk-based pipeline integrity programs were required – particularly for locations where there could be a high consequence of any failure of the pipeline.

However, there were limitations in conducting some of the inspections. Many pipeline operators do not like hydrotesting existing pipelines – particularly those that are supposed to be free of water. Besides being expensive, it can be very difficult to remove all the water from the pipelines following such pressure tests. Any water remaining within the pipelines would facilitate the corrosion processes. It is also possible that sulfate reducing bacteria within hydrotest waters could attach to the pipe wall, and ultimately result in microbiologically influenced corrosion.

Another limitation many pipeline companies have is that the pipelines were not designed for periodic cleaning by passing a pig through the pipeline. Such is the case for many gas distribution pipelines, for example. It was not viewed as practical, nor cost effective, to install pig launchers and receivers on the numerous pipelines throughout the US. Consequently, the Federal Government worked in conjunction with the pipeline industry to develop an alternate inspection methodology, which could be used to confirm the integrity of buried pipelines from failure related to external corrosion. This is the foundation of the External Corrosion Direct Assessment (ECDA) process.

IQRPE's note: document RPP-27097 provides an in-depth study on the feasibility of various above-ground assessment techniques.

6.1.1 Application of the Methodology to Transfer Lines at Hanford

The rules issued by the Department of Transportation and Office of Pipeline Safety are focused on pipelines transporting hazardous materials. The question can be raised regarding whether these pipeline regulations are applicable to operations at Hanford. On one hand, it can be argued that the Federal Regulations would not necessarily be applicable at Hanford, since there is no public access to the areas of the buried transfer pipelines or the storage tanks. Hence, the public would not be placed at risk from the perspective of safety or health. Additionally, the pipelines transport waste products, and do not have the potential for explosions, unlike pipelines transporting natural gas or refined petroleum products. On the other hand, it is of prime interest to Hanford to maintain the integrity of the transfer pipelines and the waste storage tanks.

Leaks and spills of the radioactive waste are to be prevented. Hence, best industry practices should be followed to ensure the integrity of those transfer pipelines.

The earlier rules relied upon pressure testing or the use of intelligent pigs to confirm the integrity of pipelines. It is not desirable to confirm the integrity of the transfer pipelines at Hanford, using either of these approaches. Both would require large volumes of water, which would have to be processed after the integrity testing, as the water cannot be returned to public waterways. If the pipeline failed the hydrostatic pressure test, the contaminated water, which leaked from the pipeline, would have to be cleaned up. It would also be very expensive to conduct in-line inspections of the transfer lines, as the in-line inspection vehicles (pigs) would probably become contaminated when passing through the pipelines. Such contamination could not be easily removed from the in-line inspection vehicles, and it might not be possible to release the pig –an expensive proposition.

The new DOT rules reflect a major change – the acceptance of external corrosion direct assessment as a valid method for confirming that external corrosion has not compromised the integrity of the piping. The companies that provide services to the pipeline companies have developed a number of inspection techniques, which are capable of determining the location and approximate magnitude of external corrosion on buried pipelines. This same technology can be used at Hanford for assessing the status of cathodic protection systems, and locating holidays in the coatings. The network of buried transfer pipelines at Hanford can be examined by using instrumentation above grade (above ground). Only selected segments of the transfer pipeline would then need to be excavated for direct visual inspection of the exterior surface, which would confirm the results from the indirect inspections. (When excavated, the remaining wall thickness could be measured at each of the excavation sites, using ultrasonic techniques. This could provide a measure of the thickness of the remaining pipe wall for single walled transfer pipelines, and could provide an indication of possible internal corrosion at that particular location. However, such ultrasonic inspections would not be applicable to encased transfer pipelines.

IQRPE's note: document RPP-27097 provides an in-depth study on the feasibility of various above-ground assessment techniques.

6.2 PRESSURE TESTING – HISTORICALLY USED TO DEMONSTRATE INTEGRITY

Industry has used pressure testing for many years as an accepted practice for demonstrating the integrity of new pipeline construction. Hydrotests, as they are commonly called, can be used to demonstrate the strength or integrity of a system, as well as identifying if leaks are present. Although water is the most commonly used fluid, the ASTM B31.8 code allows for the use of other fluids. Compressible gasses should not be used, since the stored energy within the compressed gas could cause a leak to becoming a rupture, and result in a catastrophic failure. The ASTM B31.8 code provides the details for pressure testing of pipelines, following construction. The same types of hydrotests (pressure tests) can be used to confirm the integrity of pipelines, which have been in service for a number of years.

Per the ASTM code, the pressure testing consists of filling a system with the test fluid, and then increasing the pressure to the test levels, where it will be held for a specific period of time. There are specific guidelines regarding the allowable drop of pressure, which may occur if the temperature of the fluids drops a few degrees.

Pressure testing will typically take the pipeline segments tested up to 110% of the Maximum Allowable Operating Pressure (MAOP or MOP). Note that the MAOP is defined within ASTM B31G, based on the materials of construction, including the heat treatments, the wall thickness, and the corrosion allowance. Pipelines, which pass the pressure tests, will be certified to provide the assurance of integrity for a period of one year, per B31.8. If there are pre-existing flaws within the pipeline, the strength tests will cause defects larger than a critical size to leak. Thus defective sections can be removed from the pipelines and replaced.

The ASME B31.8 Integrity Supplemental Standard discusses Class 1 natural gas transmission pipelines. It defines corrosion defects into three categories – those that require "immediate repairs," "scheduled repairs," and "continue to monitor." These are:

- **Immediate repairs**. Corrosion defects that would fail during pressure tests to 110% of the MAOP.
- **Scheduled repairs**. Corrosion defects that would fail between 110-139% of the MAOP. These must be addressed if they could grow to failure before the next integrity evaluation.
- **Continue to Monitor**. Corrosion defects that would not fail at 139% of the MAOP, but which must be monitored to ensure they will not grow to the point of creating concerns for the integrity of the systems, prior to the next integrity evaluation.

By conducting pressure tests at 139% of the MAOP, it is possible to remove all "immediate" and "scheduled" defects, and to be left only with defects, which should be monitored, but do not require repairs at the present time. [The largest size defects that could remain after pressure testing to 139% of MAOP would be those defects, whose length and depth is such that it would only fail at pressures above 1.39 times the MAOP. For pipelines, where the original MAOP is 72% of the yield pressure, the largest defects that could remain are those that would fail only if pressures are greater than yield pressure, since 0.72 times 1.39 equals 1.00].

Unfortunately, pressure tests provide no information regarding the number, size, or location of remaining defects, or the growth rate for the individual defects. Hence, other inspection/survey technologies may be required for locating the position of such anomalies, and in-line inspections via intelligent pigging has been one of the most common approaches to determining the size and location of such indications within pipelines, which have launchers and receivers.

6.2.1 General Considerations Associated with Hydrotesting of Pipelines

It is common practice to conduct hydrostatic pressure tests following the construction of new pipelines. All hydrotest waters must be removed from the pipelines, following pressure testing.

Otherwise, pockets of water could remain in low spots along the pipeline, and corrosion could result from the combination of air/oxygen and water vapor. Sulfate reducing bacteria within the hydrotest waters could also cause microbiologically influenced corrosion. Hence, it is best to initiate operations as soon as possible after completion of construction and hydrotesting.

Many pipeline operators do not want to conduct hydrotests of pipelines that have been in operation for a number of years – particularly if the products being transported are not mutually soluble with water. Not only can it be complicated from the perspective of removing the hydrotest waters after confirming the integrity of the pipeline, but it is possible that water disposal issues can be a significant issue and perhaps a significant expense.

6.2.2 Considerations for Hydrotesting Transfer Lines at Hanford

One of the goals of Hanford operations is to minimize the volumes of waste that is generated and that needs to be processed as part of the waste disposal. If the existing transfer pipelines were filled with water for pressure testing (hydrotesting), those volumes of water would need to be routed to waste storage tanks for processing (evaporation). The hydrotest water could not be returned to any public waterway. There can be significant costs associated with the processing of water used in hydrotests.

It must be remembered that the product being transferred between waste storage tanks is radioactive. Although the lines are flushed with small volumes of water, following each transfer, there are no procedures to clean the pipelines between transfers. (Cleaning pigs are not used). If a single walled pipeline were to leak or burst during a hydrostatic pressure test, the area at the location of the pipeline leak/burst is likely to become contaminated by the hydrotest waters. It can be difficult and expensive to decontaminate such areas. As such, it is considered bad practice to demonstrate the integrity of the existing single wall transfer pipelines at Hanford through the use of hydrotesting. However, if transfer pipelines are encased within larger diameter pipes, hydrotesting could be considered, since a failure of the inner pipeline would be easily detectable, and any fluids that leaked would be retained within the outer casing.

6.3 IN-LINE INSPECTIONS – HISTORICALLY USED TO DEMONSTRATE PIPELINE INTEGRITY

Besides the initial hydrotesting of a pipeline, the most common approach to confirming the integrity of a pipeline has been through in-line inspection vehicles, commonly called intelligent pigs. This section will provide a brief overview of pigging programs and how they have been used for demonstrating the integrity of pipelines. Although it may be technically possible to clean and inspect the transfer pipelines at Hanford, in-line inspections would not be a cost-effective nor practical approach to determining the integrity of the transfer pipelines. First and foremost, there are no pig launchers or receivers. Second, an extensive cleaning program would be needed to remove debris within the pipelines before valid inspection results could be obtained. This latter condition would also apply to attempts to visually inspect pipelines, such as through fiber optic techniques.

6.3.1 Ultrasonic Inspections

Ultrasonic pigs inspect pipelines by transmitting sound waves through pipeline walls, and processing the return echoes. The transducers are positioned immediately adjacent to the pipe wall, and listen for the reflection from the front wall (interior surface of the pipeline) and from the back wall (exterior surface of the pipeline). Although it is a good method for inspecting pipelines, it requires the pipeline to be filled with water or another suitable fluid, which would allow the passage of sound waves.

6.3.2 Magnetic Flux Leakage Inspections

The magnetic flux leakage (MFL) establishes a very strong magnetic field through the pipe wall as the pig passes along the steel pipelines. The field is sufficiently strong that it saturates the metal. If there is an anomaly or defect along the pipeline, the magnetic fields will be distorted by the presence of the indication. Like ultrasonic technology, MFL technology can determine whether indications are internal or external.

6.3.3 Clean the Pipeline Prior to Any Inspections

The transfer pipelines need to be cleaned prior to inspecting the interior of those pipelines. If it has been a long time since a previous pipeline cleaning, there may be large volumes of debris within the pipeline. An incremental cleaning program may be needed to remove, small, manageable quantities of debris. Such a program would utilize a series of cleaning runs having increased capabilities for removing debris.

Clean, debris-free metal surfaces are necessary for not only in-line inspections, but also for optical inspections of the pipelines.

6.3.4 Limitations of In-Line Inspections for Transfer Pipelines at Hanford

Intelligent pigging is an excellent method for inspecting pipelines, and theoretically could be used to determine the location and extent of both internal and external corrosion along the transfer pipelines at Hanford. However, that would require the pipelines need to have been designed for such pigging, which would typically require that the radius for any pipe bend be at least three times the diameter of the pipeline. There must also be launchers and receivers at the opposite ends of the pipeline. Since there are no pig launchers or receivers, it is not practical to consider the use of in-line inspections to assess the integrity of the transfer pipelines. Thus, the recently recognized direct assessment methodology is the most practical approach for determining the integrity of the transfer pipelines from the perspective of external corrosion.

IQRPE's note: refer to document RPP-27097 for the feasibility of direct assessment methodology.

6.4 METHODOLOGY FOR INSPECTING EXTERIOR SURFACE OF BURIED TRANSFER LINES

External Corrosion Direct Assessment is a four-step process for the evaluation of the integrity of pipelines. The steps are (a) Pre-Assessment, (b) Indirect Inspection, (c) Direct Examination, and (d) the Post Assessment. The Pre-Assessment step consists of collecting historical and current data to define regions and to select the appropriate indirect inspection tools. The Indirect Inspections are the above grade level inspections of pipelines to identify and define the severity of coating faults or anomalies, which may be indicative of corrosion. This would also provide information regarding the cathodic protection system. Direct Examination starts with the identification of specific locations for excavations, and then encompasses the direct inspections of the external surfaces of the pipeline, which have been excavated. The Post Assessment is a review and comparison of the data collected during the three previous steps, such that the effectiveness of the process can be determined, and the appropriate re-inspection intervals can be determined. Each of these steps will be discussed in more detail within the following subsections.

The process could be used to assess the integrity of the transfer pipelines between the different waste storage tanks at Hanford. It would focus on determining whether external corrosion may be occurring at holidays in the coatings, and whether the cathodic protection systems are adequate for protecting the pipelines. The process also calls for the direct inspection of a certain number of segments along the pipeline, which entails an excavation and direct visual inspection of the pipeline. Thus, the accuracy of the indirect inspection techniques can be validated.

When the transfer piping is excavated, it will be possible to measure the thickness of the pipewall, using ultrasonic techniques from the exterior surface. It will be possible to obtain data regarding the integrity of the transfer line if it is a single wall pipeline. However, if it is encased, it will not be possible to assess the interior surface of the transfer line, using ultrasonic techniques applied from excavated sections of that pipeline.

6.4.1 Pre-Assessment

The Pre-Assessment step starts with the collection of all historical information available that is related to the pipeline. The information to be collected would typically fit into five categories:

- Pipe data
- Construction data
- Soil & Environmental conditions
- Corrosion Protection data
- Operating Parameters & History

One of the first questions to address is whether it is feasible to use the direct assessment process. For example, the following conditions can make it difficult to apply the technique:

(a) Locations where coatings cause electrical shielding, i.e., at disbonded coating

(b) Backfill with significant rock content or rock ledges

(c) Certain ground surfaces, such as pavement, frozen ground, and reinforced concrete

(d) Situations, where it is not possible to acquire measurements from above ground in a reasonable time frame

(e) Locations, which are adjacent to buried metallic structures

(f) Inaccessible areas

After a review of local conditions, it would be determined whether the direct assessment methodology could be applied. It may be necessary to divide the pipeline into a number of different regions, and at least two indirect inspection technologies would be used to assess each region. The methodologies should complement each other, but would use different instrumentation and techniques. For example, consider a pipeline, having a good coating. A close interval survey could be used to quantify the cathodic protection, interferences, current shielding, and coating quality. This would be accompanied by a Direct Current Voltage Gradient (DCVG) survey to identify the locations of damaged coatings.

If there are locations along a pipeline, where certain indirect inspections are not practical, such as at cased road crossings, then alternate inspection technologies must be identified for use in completing the investigations. The location would be treated as a separate ECDA region, and the second or third inspection technique must be able to provide confidence in the validity of the results. If alternate inspection technologies are not available, then the ECDA process cannot be applied.

6.4.2 Indirect Inspections

Indirect inspections are used to identify the locations of coating faults, such as holidays, blisters, etc., insufficient cathodic protection, electrical shorts, interferences, current shielding, and other anomalies along pipelines. The indirect inspections also identify areas, where corrosion may be occurring, or has occurred. Some of the pipeline survey techniques, which are typically used include:

- Depth of Pipe surveys
- Soil Resistivity surveys
- Probe to Probe Potential surveys
- Close Interval on/off Potential surveys
- Direct Current Voltage Gradient surveys

- Electromagnetic current attenuation surveys
- Alternating Current Voltage Gradient surveys

There are advantages and disadvantages for each technique, depending on the type of anomalies to be detected and the condition along the pipeline. It is best to consult with a company that provides such direct assessment services to pipeline companies, and have them review the available data and select the appropriate indirect inspection methodologies. They should collect and analyze the field data. Note that engineering skill, coupled with experience, is essential to properly identify the locations on the buried pipeline that are most likely to have external corrosion.

The inspection/surveys, which that are selected, should be conducted at approximately the same time. Thus, the different inspection/survey techniques will "see" essentially the same extent of corrosion on the exterior surfaces of the buried pipeline, and the results can be compared. Each of the different sets of inspection/surveys results need to be tied to the same reference points on the pipeline, enabling the comparisons.

The results from the different surveys would be compiled or displayed together, such that it is possible to determine the locations having the greatest likelihood of external corrosion. A certain number of those locations would then be selected for excavation, and direct visual examination of the exterior surface of the piping.

6.4.3 Direct Examinations

Direct examination requires the excavation of pipelines, such that the cause and extent of the corrosion can be determined, using visual examinations. This step starts with the review, ranking, and prioritization of indications identified in the Indirect Inspections step. Each of the indications would be placed in one of three categories, namely

- Immediate Action required
- Scheduled Action Required
- Suitable for Monitoring

The highest priority indications will be subject to excavation and direct observations of the pipe surface, including a series of tests on the surrounding soil and electrolytes. NACE Standard RP0502 requires at least one excavation and direct examination of the external surface of the pipeline (or cased pipeline). However, if this is the first time the particular pipeline has been subjected to the direct assessment process, a minimum of two areas to be excavated and directly examined.

The excavations should be conducted methodically, in such a way that data can be collected throughout the digging. When the soil is removed, the condition of the pipeline coating should be documented, using sketches / photography, and field notes. If liquid is underneath blisters, they should be "popped," such that the pH of the liquid can be determined.

As part of the direct examinations, measurements of the pipe to soil potential should be collected, and samples of the soil and groundwater should be collected and analyzed. These would be used to help determine whether the transfer pipeline(s) are receiving sufficient cathodic protection from either impressed current or sacrificial anodes as to protect the base metals of the piping.

Following the examination, the coating, which is not in good condition, would be removed to expose the bare metal. The pipewall surfaces would then be cleaned to enable a direct visual examination of defects on the metal surface. Mechanical abrasive blasting is typically used. The position and depth of each indication would be recorded, as would information related to possible microbiologically influenced corrosion (MIC) or stress corrosion cracking (SCC). It may also be appropriate to chemically analyze the deposits within external pits so as to determine the active corrosion mechanisms.

Once the location of all corrosion-related defects has been found, the remaining strength of the pipe wall should be determined for the sections of pipe having indications. These would use standard formulae, such as presented in ASME B31G, Modified B31G, or RSTRENG.

The root cause for the corrosion should be identified, such that an appropriate corrosion control program could be implemented, to prevent the corrosion from progressing. If pipeline repairs are necessary, e.g., the installation of sleeves, it should be recoated before being buried.

6.4.4 Post-Assessment

The fourth step in the direct assessment process is the Post Assessment. This step takes a high level perspective for determining the overall effectiveness of the process. For example, any discrepancies associated with the estimated depth of an indication would be compared to the actual depths, as determined during the direct examinations. If the inspection/survey techniques cannot be used for most sections of the pipeline, the limitation should be noted, such that alternate inspection/survey instrumentation can be employed.

The Post Assessment step would also be used to determine the reassessment intervals. The reassessment interval is basically the time from the completion of the most current evaluation and the next, or follow-up direct assessment. It would be determined from numerous factors, such as the present wall thickness, an estimated corrosion growth rate, the maximum allowable operating pressure, the pressure equating to the yield strength of the piping material, the failure pressure, and appropriate safety factors.

When first assessing the effectiveness of the process, the results from one particular direct examination should not be used by itself. Instead, the results from at least two excavations and direct examinations should be used when using the direct assessment process for the first time.

6.4.5 Applying the Direct Assessment Process at Hanford

The overall goal of the corrosion control programs at Hanford is to maintain the integrity of the waste storage tanks and the associated transfer pipelines. The present inspection programs, which have been used to assess the integrity of the tanks, represent sound engineering practices, while recognizing practical limitations associated with the storage of radioactive wastes. (For example, the wastes cannot be removed to allow the tanks to be cleaned and visually inspected). Although the transfer pipelines are not in continuous use, it is essential that the integrity of those lines be maintained as well.

The methodologies for demonstrating the integrity of pipelines transporting hazardous materials have traditionally relied upon pressure testing (hydrostatic tests) or the use of intelligent pigs to confirm the integrity of pipelines. Neither of these approaches is desirable for operations at Hanford. However, recent changes in the DOT and Office of Pipeline Safety rules and regulations have resulted in the recognition of the External Corrosion Direct Assessment (ECDA) process as being an acceptable alternative.

Pending a review of relevant data (the first step), it appears to be practical to implement the external corrosion direct assessment process for assessing the transfer pipelines at Hanford. Note that this process focuses on assessing external corrosion of the metal pipeline in direct contact with the soil. It cannot be used to assess the condition of a transfer pipeline, which is encased within a larger diameter piping. However, it can be used to assess any external corrosion on the casing.

The process also calls for the excavation of at least one section of the pipeline for direct examinations of the external surface of the pipeline. Hanford will need to be cautious when conducting these examinations, due to possible elevated background radioactivity, caused by residuals of the waste transfers, which remain within the pipeline.

7.0 MONITORING CORROSION AND EROSION WITHIN TRANSFER PIPELINES

Hanford has reported failures of the transfer line, which will be discussed in Section 8.4. Failures have been associated with both internal and external corrosion, and a method is needed to monitor corrosion within these pipelines. Section 7 will address the monitoring of internal corrosion within these pipelines.

It is generally viewed as impractical to inspect transfer lines and determine the extent of internal corrosion (or areas of possible erosion), using intelligent pigs, since there are no launchers or receivers. Although boroscope inspections can be initiated at the ends of the transfer lines, there is only a limited portion of the pipelines, which could be inspected, using that technique. Further, boroscopes may not be able to observe conditions underneath any depositions remaining within the pipelines. Hence, a more practical approach is needed for assessing internal corrosion within the transfer pipelines.

7.1 CORROSION MONITORING WITHIN TRANSFER PIPELINES

At the present time, there is no program for monitoring corrosion rates within the transfer lines, i.e., internal corrosion, which may be associated with the transfer of radioactive wastes between storage tanks during the waste consolidation and vitrification processes. Some of the failures of the transfer pipelines have been associated with erosion-corrosion mechanisms. Consequently, it is considered best practice for corrosion monitoring coupons and instrumentation to be installed within the transfer pipelines at Hanford as one measure of the integrity of the transfer pipelines.

Note that unlike pipelines used in other industries, the transfer pipelines at Hanford are used only intermittently, i.e., only when the radioactive wastes and associated fluids are being transferred. Although the pipelines are flushed briefly following the waste transfers, the pipelines are not cleaned, using cleaning pigs or another technology to remove the debris. Thus, small quantities of the products being transferred may remain within the pipeline. A boroscope examination of the piping associated with the SL-503 Valve Pit Jumper failure revealed depositions on the interior of the piping (see Section 8.4.2). Thus it must be assumed that a portion of the contents from within the waste storage tanks will remain within the transfer pipelines.

It should also be noted that a portion of the water used to help flush the transfer pipelines may remain within low spots along the pipeline, following the transfers. Further, air will enter the pipeline, following the completion of the transfers. Hence, the combination of waste products, water, and air/oxygen makes it possible for corrosion to occur not only during the transfer of waste products, but also during the period of time between transfers

Ideally, it would be best to conduct depth of cover surveys, such that low spots along the transfer pipelines could be identified. Any residual water used to flush the transfer lines is most likely to collect or pool at the low spots, and this is where corrosion is most likely. Thus, in theory, access fittings should be installed at the 6:00 o'clock position on horizontal sections of the pipeline, which corresponds to low spots along the pipeline, which are slightly deeper than adjacent segments.

However, it must be recognized that there will be extreme reluctance to weld an access fitting onto a pipeline containing some radioactive deposits. As such, it will not be practical to install corrosion monitoring access fittings onto existing single wall transfer pipelines.

Likewise, it would not be practical to install access fittings on new transfer pipelines, which are encased within larger diameter pipelines. (By the time the engineering studies would have been completed, the encased transfer pipelines would have already been placed in service). Accordingly, the most practical method for monitoring corrosion within the transfer pipelines would be to install the access fittings in new jumpers, and then replace the existing jumpers with the new ones, which contain the access fittings.

It is considered best practice for multiple access fittings to be installed on the jumpers. This will allow the use of multiple techniques for monitoring corrosion. The first two access fittings should accommodate:

- Flush coupon (C-steel element)
- Flush mounted ER Probe (C-steel element)

Note that by virtue of recording successive probe readings, electrical resistance probes will provide a history of any corrosion, which occurred between successive readings. As such, they are preferred over linear polarization resistance probes, where each reading is independent of all previous readings. Also, by virtue of being "flush mounted," the corrosion coupon and electrical resistance probe would be able to monitor corrosion at the pipe wall, rather than at a midstream position.

There is also a possibility/likelihood that the predominant corrosion mechanism along the transfer pipelines is an erosion mechanism, as the solids laden sludge is pumped through the pipelines. Flush mounted corrosion probe would not be able to make as clear a distinction between general corrosion and an erosion phenomenon, other than from the records of metal loss versus time, and documenting the time period to coincide with the waste transfer. However, if the flush mounted probes or coupons are made from a material that does not corrode within the environment, then any "corrosion" recorded by such instrumentation could be attributed to the solids transfer, i.e., the mechanical erosion of the base pipeline materials. Accordingly, it is recommended that a third or fourth access fitting be installed along the jumper, and be used for the installation of flush mounted coupons or probes constructed from an inert material, such as stainless steel. Any loss of metal or corrosion reported for those materials could be attributed to the erosion processes.

- Flush coupon (Stainless-steel element) for measuring mechanical effects of transferring waste products.
- Flush mounted ER Probe (Stainless steel element) for measuring any mechanical effects associated with the transfer of waste products.

Note that the corrosion monitoring access fittings should be installed at the 6:00 o'clock position on horizontal sections of piping. However, it may be difficult to apply this rule directly to jumpers. The specific positioning of the access fittings would be based on the configuration of the jumper itself, and taking into account where any flush waters may collect, following the transfers.

7.2 MEASURING WALL THICKNESS AT LOCATIONS OF DIRECT ASSESSMENT EXCAVATIONS

In Section 6.4, the external corrosion direct assessment methodology was presented. This is a method, whereby a pipeline could be examined by indirect inspection techniques, and the areas most likely to have external corrosion would be identified. The most critical locations would be excavated, such that the external surfaces of the pipeline could be directly examined, using visual and other techniques. It will also be possible to conduct ultrasonic scans from the exterior of the pipelines to measure the remaining thickness of the pipewall at that location. If the transfer line is a single wall, it will be possible to obtain evidence of possible internal corrosion at that location. However, if the transfer pipeline is encased within another pipeline having a larger diameter, it will not be possible to use ultrasonic inspection techniques to detect and quantify any internal corrosion within the transfer pipeline.

If the transfer pipelines are single wall and apart from nearby structures, either automated or manual ultrasonic surveys would be conducted around the entire circumference of the transfer pipeline, and extending a convenient axial length, such as 10 feet. The automation would enable much of the scanning to be completed remotely, thereby minimizing any exposure of individuals to radioactive materials within the transfer line.

Note that the wall thickness measurements by ultrasonic techniques will have a limited value. Although the data shows the extent of internal corrosion, which occurred at a specific location along the pipeline, it may or may not be representative of conditions elsewhere along the pipeline. As such, the data should not be used to the exclusion of other techniques. The results from ultrasonic inspections should be compared to results from other corrosion monitoring or corrosion rate modeling results, before drawing conclusions.

7.3 CONTINUE MODELING CORROSION RATES FROM CHEMICAL ANALYSES

The corrosion control program at Hanford is unique, as compared to the corrosion control programs in other industries. Most industries have adopted the practice of inserting corrosion monitoring coupons or electronic probes within the process streams, and using those results as the basis for initiating chemical treatment programs or other corrosion mitigation programs.

In contrast, the corrosion control programs at Hanford have been primarily based on modeling of the corrosion rates, based on the chemical analysis of the waste products within the storage tanks. The results from the chemical analyses of fluid samples are matched to corresponding values in data matrices, which correlate chemical compositions and corrosion rates, as determined by extensive laboratory tests. This approach has apparently served Hanford satisfactorily, as evidenced by the years of service obtained to date. As such, fluid samples should continue to be analyzed, and the corrosion rate modeling approach should be continued into the future. However, it should be complemented with field measurements of the corrosion rates. This double check will help validate results.

As an aside, TFC corrosion engineers need to understand that when and if corrosion-modeling programs are applied to conditions within the transfer pipelines, the modeling should reflect conditions within those pipelines, such as an increased concentration of oxygen.

8.0 CORROSION MONITORING PROGRAM FOR THE DSTS AT HANFORD

This section will describe the corrosion monitoring programs, which are presently being used to monitor the integrity of the double shell waste storage tanks at Hanford. There will be recommendations regarding measures, which could be implemented to enhance the reliability of these monitoring systems, using complementary, independent corrosion monitoring techniques. This section will also comment on the procedures used to transfer waste products between tanks from the perspective of possible corrosion within the transfer lines, and will summarize several

failures of transfer pipelines. It is essential that the integrity of the waste storage tanks be maintained. It is equally important that the integrity of the transfer pipelines also be maintained. The overall practices identified are designed to provide a corrosion monitoring program, which can be applied to both the DSTs and the transfer pipelines, such that the onset of corrosion can be readily detected, and the appropriate remedial programs can be implemented to control corrosion, as necessary.

8.1 INSPECTIONS FOR ASSESSING INTEGRITY OF THE STORAGE TANKS

It is essential that the integrity of the underground waste storage tanks be maintained. The goal is to extend the lifetime of the tanks until all the waste products at Hanford have been properly processed for permanent storage, and to prevent any leaks within the tanks and waste transfer pipelines until the end of the mission. As such, Hanford has launched an extensive program for ultrasonic inspection of the DSTs, using crawlers to survey the interior walls of the DSTs through the annular space between the inner and outer walls.

There have been a number of reports, which have already been issued regarding the inspection and the integrity assessments of individual tanks. Others will be issued in the near future, based on the ongoing work. The reader is referred to the individual reports for discussions regarding the methodology for inspecting the DSTs through ultrasonic measurements of the remaining wall thickness and the associated integrity assessments for the individual tanks. However, it is worthwhile to summarize some observations.

- RPP-11581 is a report, whose primary purpose was to document the ultrasonic inspections of tank 241-AW-102. The methodologies and results from the ultrasonic scans of that tank are discussed. For example, the locations of the ultrasonic scans are illustrated with reference to the specific plates, which were used to fabricate the tanks. There was no reportable wall thinning, pitting, or crack indications for tank 241-AW-102. The report also provides information regarding the overall plans for inspecting other DSTs, and includes inspection results for tanks, which have been inspected.

- Table 11-1 from RPP-11581, Rev 1 presents a list of DSTs, which have been inspected, the year of the inspection, (a) whether there were any reportable plate crack-like indications, (b) whether there was any reportable plate pitting, (c) whether there was any reportable plate thinning, and (d) whether there was any reportable weld thinning, pitting, or cracks. The original table from that report is included below, since the results are quite significant.

  No crack-like indications were found for any of the tanks that had been inspected in FY 1997-2002. Likewise, there were no indications of pitting on the plates, with the possible exception of AY-101, where there was a pit-like indication at the historical liquid-air interface. Only minute areas of wall thinning were reported for any of these tanks, the deepest of which was 16%.

  In general there was no degradations of the welds, which would have affected the integrity of the tanks. The greatest reduction in thickness for localized weld areas was

14%. Thus, RPP-11581 evidences that damage to the base materials has been minimal to date. If corrosion monitoring coupons or instrumentation had been installed within the tanks, the results from such monitoring would have been expected to be extremely low and as such, it would have been difficult to document the satisfactory performance of the corrosion probes.

- An earlier report, HNF-4860 "241-AN Double Shell Tanks Integrity Assessment Report," also discussed inspection results, and focused on several tanks, which had been identified as the most favorable for stress corrosion cracking mechanisms to be active. However, neither cracks, nor evidence of pitting was found during the examinations of tanks AW-103, AN-107, AZ-101, AY-102, AN-105, or AN-106. Evidence of general corrosion, i.e., wall thinning, was only found for localized areas on tank AN-105; and the AN-105 data was determined to be suspect. Nevertheless, the overall inspection results evidence low corrosion rates, which is good from the perspective of maintaining the integrities of the tanks, but which can be a challenge when validating corrosion monitoring systems.

- Despite the historical low corrosion rates, it is possible that conditions within the tanks at Hanford could change in the future – particularly when the radioactive wastes are transferred between tanks. There will be a long time interval between successive ultrasonic inspections of individual DSTs, and there is a long period of time between collections of samples of the waste. Consequently, it is considered best practice for corrosion monitoring instrumentation to be installed within all DSTs. This will provide some measure and early warning of any changes in the conditions within the tanks, which could affect the corrosion rates and the integrity of the tanks.

8.2 CORROSION MONITORING WITHIN THE STORAGE TANKS

The subsections under this section will describe the use of electrochemical noise (EN or ECN) techniques for corrosion monitoring at Hanford, and will note limitations of the technology, as reported in the semiannual Corrosion Monitoring Status reports. Although promising, further laboratory work to be needed in order to properly interpret the meaning of the EN signals, particularly those which have been recorded within low corrosion rate environments, i.e., less than 1 mpy, at Hanford. It is recommended that the EN monitoring be complemented with the use of other monitoring techniques, including electrical resistance probes and coupons.
By comparing the results from multiple monitoring techniques, it will be possible to have better confidence regarding the actual corrosion rates within the waste storage tanks. Concurrently, Hanford should continue to develop the database and experience to properly interpret transient EN signals.

Table 11-1 from RPP11581. Double-Shell Tanks Chronological Inspection Results Findings. (2 Sheets)

Tank	Inspection Year (FY)	Reportable Plate Crack Indication	Reportable Plate Pitting	Reportable Plate Thinning	Reportable Weld Thinning, Pitting or Cracking
AW-103	1997	None	None	None	None
AN-107	1998	None	None	None	None
AN-106	1999	None	None	None	None
AN-105	1999	None	None	Two very minute areas of a plate (20% maximum reduction in thickness) [a]	None
AZ-101	1999	None	None	One area of a plate (11.4% maximum reduction in thickness)	None
AY-102	1999	None	None	None	None
AP-107	2000	None	None	None	None
AP-108	2000	None	None	Two minute areas of a plate (13.8% maximum reduction in thickness)	None [b]
AW-101	2001	None	None	A pit like indication in a very minute area of a plate (16% maximum reduction in thickness)	None
AW-105	2001	None	None	None	None
AY-101	2001	None	Pit-like indication at historical liquid-air interface	Some pit-like indications identified as thinning	Three areas of 10% wall thinning in vertical welds
AN-102	2001	None	None	One minute area of a plate (11% maximum reduction in thickness)	None
AN-101	2002	None	None	One small area of a plate (12 % maximum reduction in thickness)	Four local areas near vertical welds (14% maximum reduction in thickness)
AW-106	2002	None	None	One small area	10.4% maximum reduction in thickness
AY-101	2002	Not Investigated	None	72 areas of >10% wall thinning, most in the historical liquid-air interface in Plate #2 (20.2% maximum reduction in thickness)	Not Investigated
AW-104	2002	None	None	None	None
AW-102	2002 & 2003 [c]	None	None	None	None

Table 11-1 from RPP11581. Double-Shell Tanks Chronological Inspection Results Findings. (2 Sheets)

Tank	Inspection Year (FY)	Reportable Plate Crack Indication	Reportable Plate Pitting	Reportable Plate Thinning	Reportable Weld Thinning, Pitting or Cracking
AN-105	2002	None	None	None	Not Investigated

[a] Based on a review of the tank 241-AN-105 data gathering technique in FY 1999, prompted by the FY 2002 results, the FY 1999 wall thinning data is considered questionable.

[b] Although below reporting criteria at the time, one linear crack-like indication 6 inch long by 0.142 inch deep in a nominal 0.750 inch thick plate was observed. Subsequent examination of tank 241-AP-108 in FY 2002 revealed no change in size.

[c] Primary knuckle examination using T-SAFT conducted in FY 2003.

8.2.1 History of Corrosion Monitoring at Hanford

The primary corrosion monitoring program for Hanford's waste storage tanks have been through a waste chemistry sampling and analysis program. In this program, the tank waste is sampled, analyzed, and compared to corrosion control specifications derived from laboratory exposures. The corrosion rate for the walls of the waste storage tanks have been deduced by matching the measured tank chemistries with those from laboratory studies, and then extracting the corrosion rates from tables, as determined from laboratory studies. This approach was based on the extensive Hanford Waste Tank Corrosion Study in 1980. Pacific Northwest Laboratories performed tests using various environments, and statistically interpreted the data. The studies have determined that the corrosion processes are controlled by the concentrations of hydroxide, nitrate, and nitrite within the waste. Hence, the control of the concentration of these anions has been the basis for controlling corrosion rates within the waste tanks.

Operational Specification Documents such as OSD-T-151-00007 specify that the tank contents must be within the compositional limits, but do not specify a time interval between successive sampling and analysis of the waste chemistries from the individual storage tanks. Likewise, acceptable corrosion rates are not defined within that document.

Thus, the primary corrosion monitoring program at Hanford has been the periodic (undefined time period) collection and analysis of samples from the waste tanks, and then using the chemical analyses as the basis for deducing the corrosion rates of the walls within the different waste storage tanks, and also as the basis for making chemical additions in order to bring the waste products into compliance. Recently, this chemical analysis approach to corrosion monitoring has been supplemented by the use of electrochemical noise (EN or ECN) techniques, in several of the DSTs, and will be discussed shortly.

Note that Hanford had previously considered other corrosion monitoring techniques, such as the use of metal coupons, electrical resistance probes, or linear polarization resistance techniques, but reported only a limited degree of success, using those techniques. RPP-5694, *A Plan to Develop and Demonstrate Electrochemical Noise Based Corrosion Monitoring System in Hanford Site Waste Tanks*, reported that metal coupons, the ER and LPR probes were most effective for monitoring uniform corrosion, but were not well suited for early detection of localized forms of corrosion, such as pitting and stress corrosion cracking (SCC). Pitting and SCC have been identified as the most likely mode of failure for Hanford's Double Shell Tanks (DSTs), per ARH-ST-111, UC-70 "Compilation of Hanford Corrosion Studies," July 1975 by D.C. Lini, and WHC-SD-WM-ER-414, Rev 1, "Hanford Waste Tank System Degradation Mechanisms Report," October 1996 by G.L. Edgemon and R.P. Anantatmula. Hence, Hanford desired a monitoring technique more able to detect the onset of localized or general corrosion mechanisms.

IQRPE's note: SCC is not a concern for the DST primary tanks as discussed in document RPP-RPT-28968.

Recent measurements of the general and localized corrosion rates within the waste storage tanks have resulted in the reporting of low corrosion rates, i.e., less than 1 mpy (0.001 inch/year).

Ultrasonic inspections of the interior surface of the waste storage tanks have not revealed patterns or areas of pitting, and the ultrasonic inspections have not resulted in the detection of networks of stress corrosion cracks. Hence, it is understandable that coupons and the electrical resistance (ER) probes, which had been installed within the Hanford tanks in earlier testing, did not detect significant corrosion rates. Thus, the earlier monitoring results may have been correct – the rates were very low.

[Note that both the general and pitting corrosion rates can be determined from coupons. The general corrosion rates are determined by the weight loss over the exposure period. Pitting corrosion rates can be determined by using a needle gage, and measuring the depth of individual pits, once the coupons are removed from the system and cleaned to remove the deposits. NACE RP-0775 presents tables that list industry-acceptable general and localized (pitting) corrosion rates. U-bend coupons are sometimes used as a go-no go indicator for assessing the likelihood of SCC. (Metal strip coupons are plastically deformed and the ends are bolted together, such that high stresses are maintained on the u-bend. If u-bend coupons crack during the exposure, the concerns related to possible SCC within the system are greater than if no cracking is observed at the end of the exposure cycle). When pits form on electrical resistance probes, the cross sectional area is changed dramatically, and there is a distinct and rapid change in the probe readings, which evidences the probe's failure].

8.2.2 Development & Implementation of EN Monitoring at Hanford

At approximately the same time that localized corrosion was identified as the greatest threat to system integrity at Hanford, there were advances in the electrochemical noise (EN or ECN) monitoring technology, data processing, and data management. This made it possible to attempt to advance EN technology from the laboratory to field applications.

EN technology uses the same probes as Linear Polarization Resistance probes. However, as opposed to measuring the change in current from an imposed 10 mV potential difference, the EN monitoring systems record minute fluctuations of the current and voltage between the sets of electrodes. The measurements are made on a second by second basis, and recorded. The analysis would then look for specific patterns of current and voltage fluctuations, which would be indicative of localized corrosion.

The corrosion program presently adopted at Hanford has been based on using EN technology for monitoring possible corrosion within the double shell tanks. The DSTs do not have access fittings, and hence the corrosion monitoring instrumentation is inserted into the DSTs through the risers at the top of the tanks. Since it is desirable to monitor corrosion within the sludge, the supernate liquid, and the vapor space above the supernate, multiple corrosion probes are installed onto a common probe assembly, and lowered into the DSTs through the tank's risers. Wires lead from the different probes, through the assembly and riser to electronic equipment above grade. Each of the probe assemblies has been custom built for use at Hanford.

The efforts to install corrosion monitoring instrumentation within the DSTs at Hanford started in 1995 with the proof-of-principal laboratory work. The first prototype was installed in DST 241-AZ-101 in August 1996. This was followed by an improved version for 241-AN-107

in September 1997, and a similar system was installed in 241-AN-102 in August 1998. Figure 20 is a representative illustration, which shows the position of the EN probe assembly within DST 241-AN-107.

A third generation unit was built and installed in 241-AN-105 in January 2000. The similar unit was installed in 241-AN-104 in January 2001. The EN monitoring systems, which had previously been installed in 241-AN-102 and 241-AN-107 were then removed and replaced with an upgraded design, which matched the design of the 241 AN-104 system. These upgrades were completed in mid 2001. Note that the EN system built for 241-AZ-101 did not have the necessary sensitivity to be able to detect and record potential noise for electrodes within the low electrolyte levels in the vapor space, and consequently the components were removed in 2000.

Figure 20. Schematic of EN Monitoring System, as installed at 241-AN-107.

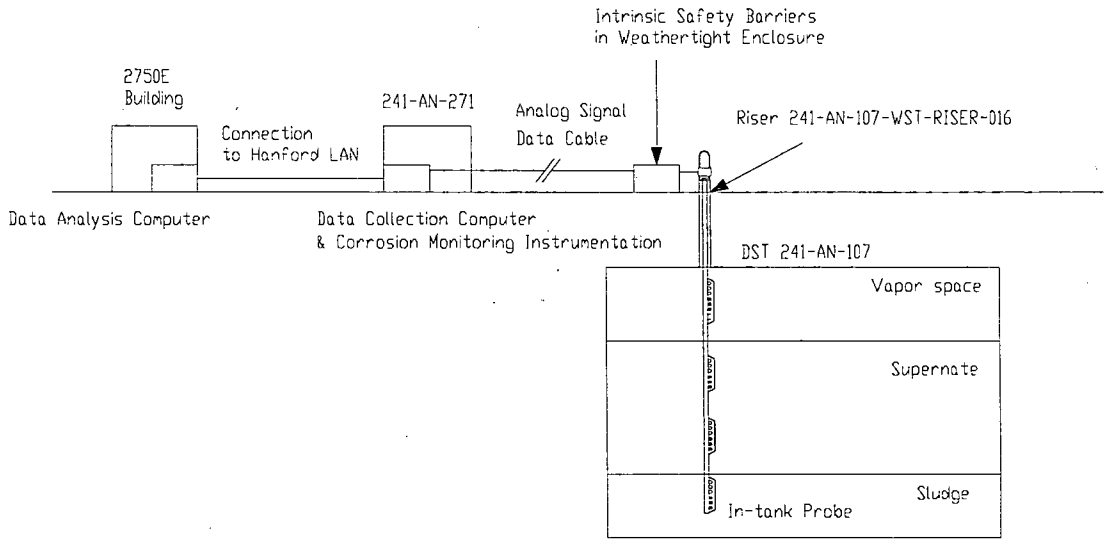

8.2.3 Design Criterion for EN Probe Design

It is not a trivial matter to design electrochemical noise probes. Quite the contrary, there are many features, which were part of the custom designs. The following is a list of the features, which were incorporated into the design for the tank-intrusive portion of the 241-AN-105 corrosion monitoring system, as originally presented in the semi-annual Corrosion Monitoring Progress Reports. Similar criteria were used when designing EN corrosion monitoring systems for other DSTs.

- The probe is fabricated from materials capable of providing at least five years of service.
- The maximum diameter of the probe fits through 4 inch diameter riser.
- The probe design facilitates decontamination by minimizing areas of liquid retention.

- All materials are capable of withstanding temperature ranges up to 100°C.
- All materials are capable of withstanding liquid phase pH ranges from 7 to 14.
- All materials are capable of withstanding radiation levels up to 1000 R/hr.
- Probe design has passed site structural analysis for mixer pump operation.
- Probe design has passed site standard seismic analysis for non-safety class equipment.
- Conductor/feed-through connections are angled to withstand probe flexure.
- Gasket seating surfaces utilize round-cut O-rings.
- Probe incorporates eight channels of EN electrodes.
- Four channels of EN electrodes utilize 44 cm^2 C-rings.
- One electrode of each C-ring array is pre-cracked and strained prior to immersion.
- Four channels of EN electrodes utilize 25 cm^2 bullet shaped electrodes.
- Electrodes are fabricated from ASTM A-537 CL 1 mild steel heat treated to match tank.
- Electrodes are isolated from probe body through the use of glass-lined feed through.
- Probe design contains an equally spaced array of 22 thermocouples.
- Probe design contains an adjustable verification thermocouple.
- Probe design contains a tank waste high level detector.
- Probe design contains three ports for pressure/gas sampling.
- Probe design contains one set of strain gauges to monitor probe flexure if flexure occurs.
- Probe utilizes an adjustable collar to allow depth adjustment of probe during installation.
- Probe body serves as grounded shield to reduce unwanted interference in the data.

In addition to the probes themselves, much work had to go into the development of the hardware and software used to manage the massive quantities of data, which would be collected from the EN probes at each of the levels within the DSTs, i.e., within the sludge, the supernate, and the vapor space.

- Current and voltage EN data are collected in an automated, user configurable fashion.
- Data are recorded at a rate of one measurement every other second.
- System simultaneously monitors eight channels of EN electrodes.
- System is capable of periodically conducting LPR scans.
- System is housed in a climate controlled enclosure by the riser containing the probe.
- System computer is connected to the Hanford network to facilitate data storage.
- System uses commercial remote access software to allow remote command and control.
- MTL Model 755-AC®[5] intrinsic safety barriers used on all tank penetrating leads.
- All data are stored in Microsoft Access databases.

8.2.4 Representative Results from EN Monitoring of Waste Tanks at Hanford

The present practice has been to issue semi-annual reports, which summarize the results from the electrochemical noise corrosion monitoring. These provide insight into the effectiveness of the EN corrosion monitoring systems and the difficulties encountered when attempting to interpret the noise signals.

---

[5] MTL 755-AC is a registered trade name of Measurement Technology, Ltd., Luton, Bedfordshire, England.

The FY-2002 report presented results from 3 tanks: 241-AN-105, 241-AN-104, and 241-AN-107. The report noted that the EN monitoring system at 241-AN-102 never functioned properly, and consequently data collection was terminated for that particular system.

Data from the probe in 241-AN-105 is illustrated in Figure 21. The FY 2002 corrosion summary report noted low uniform corrosion rates ever since installation. Since the same probe elements that are used for electrochemical noise measurements can also be used for Linear Polarization Resistance measurements, the EN measurements were suspended, and the corrosion rates were measured, using the LPR techniques. These measurements confirmed that the corrosion rates within the 241-AN-105 tank were much lower than 1 mpy. (Note that when potential differences are imposed on the probes for making LPR measurements, a period of time is required for the probes to depolarize and establish equilibrium conditions before further EN measurements can be collected).

Figure 21. Typical EN data showing uniform corrosion in 241-AN-105.

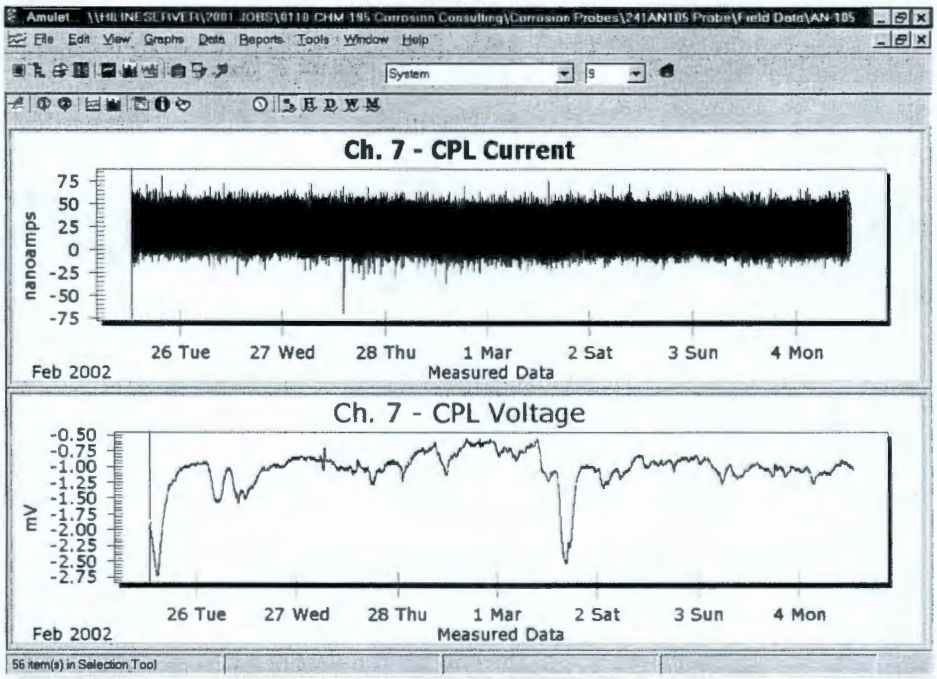

There may occasionally be EN voltage transients, which are sometimes indicative of pit initiation or other unknown electrochemical events. Figure 22 is from the FY 2002 report, and illustrates a number of voltage transients, whose origin was reported as unknown. The report suggests the possibility that the electrochemical noise may have been caused by the formation of hydrogen bubbles. Unfortunately, however, they noted that there was no laboratory data available to help in the interpretation of the results.

Figure 22. EN Data showing Unknown Electrochemical Transients in 241-AN-105.

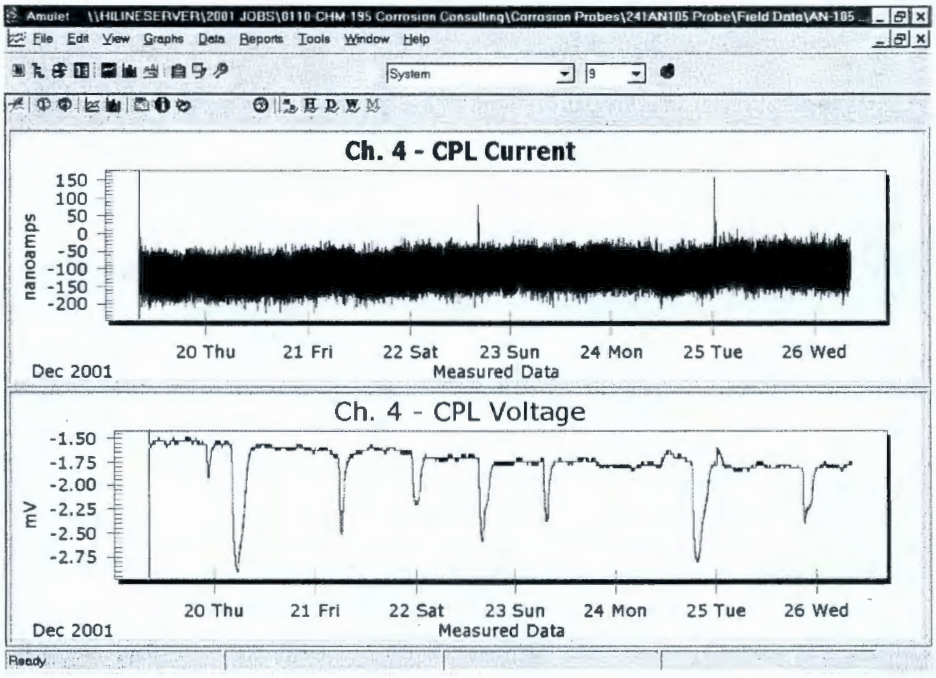

The FY2003 report discussed monitoring results from probes within 241-AN-104 and 241-AN-107. The EN probe within DST 241-AN-104 was reconfigured for LPR measurements, which only affected the electronic equipment outside of the DSTs. These measurements also confirmed low corrosion rates, i.e., much less than 1 mpy. The electrochemical voltage and current readings for the probe within the vapor space were noted to be higher than expected (compared to 241-AN-105), and the elevated readings were speculated to be related to condensation or possible splashes, caused by a gas release event. However, no laboratory work has been undertaken to support the interpretation. Similar observations were also reported for the probes within the vapor space in DST 241-AN-107.

The probes within the supernate and sludge in DST 241-AN-107 yielded EN transients that were indicative of pit initiations. However the probes were not removed from the system and visually inspected to confirm the formation of pits on the electrodes. Like the other DST waste storage tanks at Hanford, the observed corrosion rates were very low, i.e., approximately 0.05 mpy. (These were observed to increase to 0.13 mpy when caustic was added to the tank in order to comply with the chemical specifications).

The Summary Report for end of FY2003 was issued on August 20, 2003. The data from DST 241-AN-107 was good, i.e., valid. Figures 23 and 24 illustrate results from two EN probes on the same probe assembly within the supernate in tank 241-AN-107. There were occasional indications, which suggested pit initiation or other events, as can be seen by matching transients in both the current and voltage. However, it was noted that other events related to the formation of hydrogen bubble and release within tank sludge could also have been responsible for the signals. Further laboratory work is still needed to help in the interpretation of the results.

Figure 23. Raw Data showing Uniform Corrosion – Channel 3 of 241-AN-107 Probe.

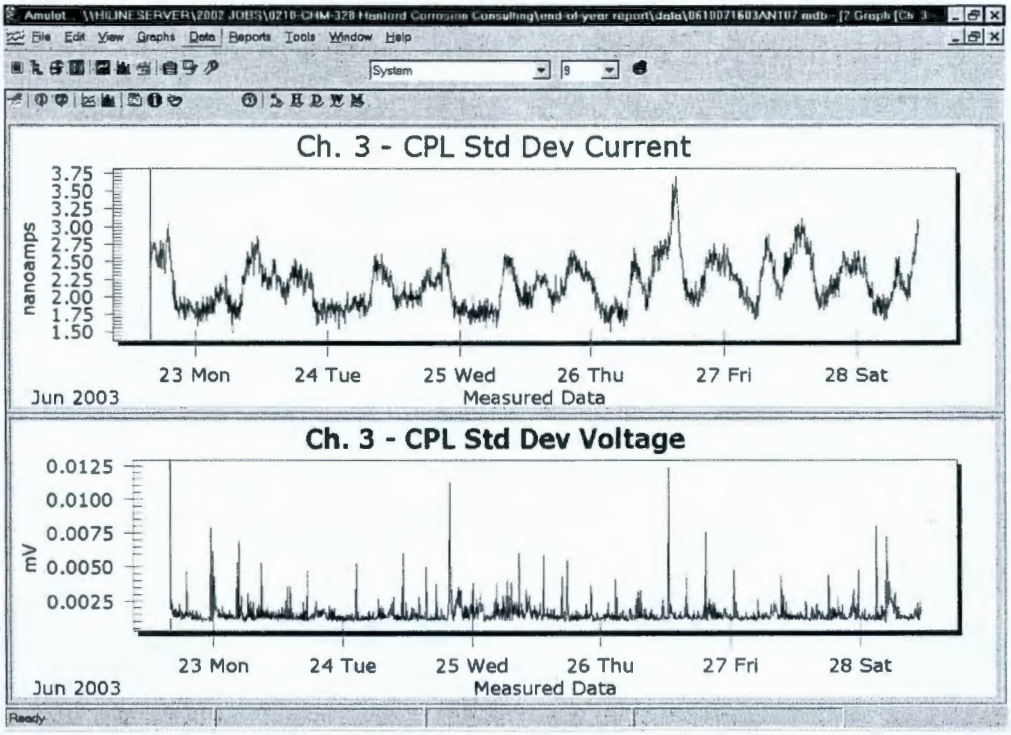

The FY 2003 Summary Report also noted that no data was available from the monitoring instrumentation within DSTs 241-AN-104 and 241-AN-105 from Jan 14 to Aug 13, 2003. Power had been shut down to facilitate the completion of other, unrelated work – the connection of a local slurry line to the transfer pipeline systems. The unfortunate aspect of EN technology is that each reading is independent of previous readings. Thus even though the electrodes were immersed within the sludge or supernate, no data is available for the period between measurements.

In contrast to EN monitoring, if a coupon is immersed, comparisons can be made between the initial and final weights, which would indicate the corrosion rate over the time of the exposure. Similarly, if an electrical resistance or high resolution electrical resistance probe is used, corrosion rates can still be estimated by comparison of the previous and the most current probe readings. Thus, when coupons and electrical resistance probes are used in conjunction with EN probes, the coupons and probes provide assurance for being able to detect the consequences from any corrosion-related events, which may have occurred if the functionality of EN probes is temporarily interrupted.

Figure 24. Statistical EN Data Shows Electrochemical Voltage Transients in 241-AN-107.

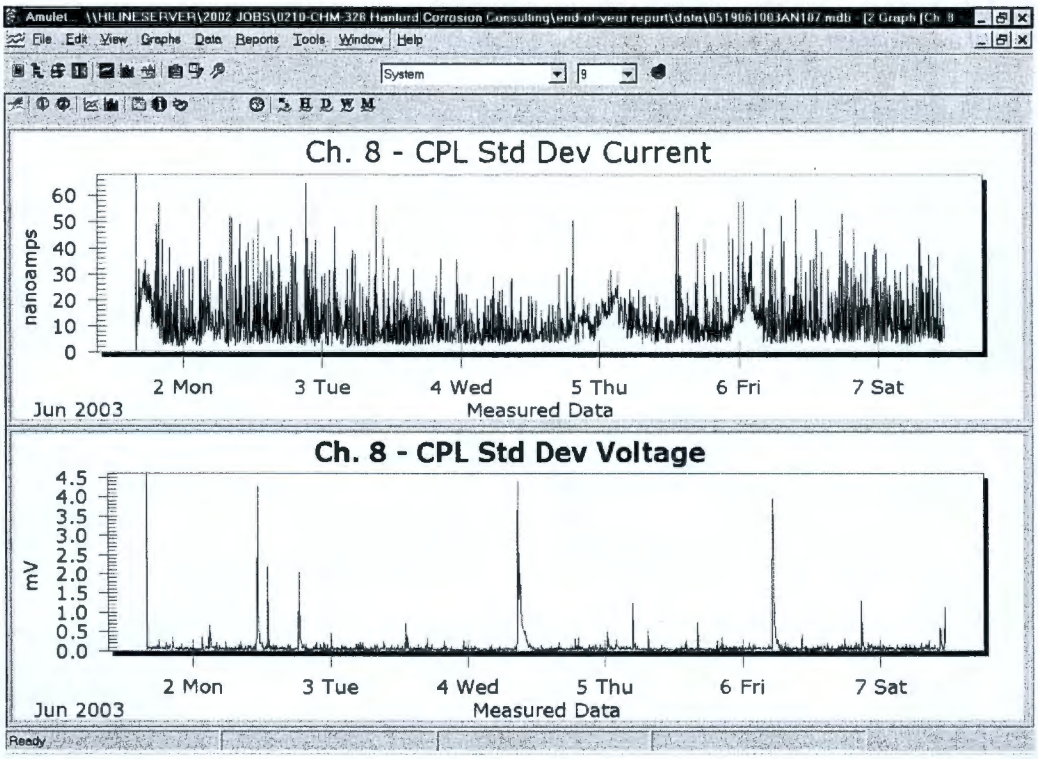

8.3 PROCEDURES FOR TRANSFERRING PRODUCTS BETWEEN STORAGE TANKS

Hanford has comprehensive procedures, which are used to control the transfer of the radioactive waste products between tanks, as the wastes are consolidated and prepared for permanent storage. The information addressed within the transfer procedures includes items such as

- Terms and Definitions
- Personnel Safety
- Radiation and Contamination Control
- Environmental Compliance
- The Identification of Special Tools, Equipment, and Supplies Needed
- Procedures to Prepare for the Transfer
- Starting and Stopping the Transfer Pumps
- Flushing the Transfer Pipeline
- Numerous Checklists for Controlling all Aspects of the Transfers, Valving, Material Balances, Monitoring Temperatures, Radiation Surveys, etc.

The procedures allow for an appropriate flexibility in managing the transfers and line flushes. The procedures are also very specific and detailed. For example, Document TO-270-044 described the procedures for "Transfer from 244-BX to 241-AP-107." The Transfer lines were to be flushed, using 6000 gallons of water. This should be able to displace most of the waste.

However, there may be low spots along the transfer lines, where water can "pool," i.e., collect. Some corrosion may occur at these locations, if water remains within pools, and air/oxygen enters the transfer lines, following the transfers.

IQRPE's note: SL-167 is an example of a transfer line most recently discovered and confirmed to have a low point.

Mechanical pigs are not used to either clean the pipelines, or to displace any water remaining within the pipelines. Since the pigs are not used to clean the pipelines or displace any remaining pools of water, it will not be practical to inspect the transfer lines, using intelligent pigs. Although boroscopes can be used to visually observe the interior surface of the pipeline, they will not be able to detect small, highly localized corrosion, which is hidden underneath any deposition.

At the present time, it will generally not be practical to monitor the interior of the transfer lines for indications of corrosion – particularly for transfer pipelines, which are encased by larger diameter pipes. Hence, the best approach for monitoring corrosion associated with the transfers is to install the monitoring instrumentation on new jumpers, which are used in the transfers. This will be discussed further in Section 9, and includes the use of corrosion coupons and electronic probes.

8.4 PREVIOUS FAILURES OF THE TRANSFER LINES

Transfer pipelines are an essential component of the waste consolidation efforts at Hanford. They are used periodically when transferring waste products and liquids between the tanks, and as such are as essential to the consolidation efforts as the storage tanks themselves. However, the pipelines are not impervious to attack. Internal corrosion and external corrosion processes can cause these lines to fail.

As of the time of writing this report (January 2004), an investigation is about to start the evaluation of a leak associated with the failure of S103 saltwell piping. The following subsections highlight the fact that product transfers are a necessary component of the waste consolidation program, and report that there have been previous internal and external corrosion failures of transfer lines at Hanford. Accordingly, a corrosion monitoring and inspection program is needed to ensure that the integrity of the transfer pipelines is maintained.

8.4.1 Waste Consolidation – Ongoing Operations

A 1995 memo/report 95-RTI-104 "Double Shell Waste Consolidation and Retrieval Planning Base Case," dated November 2, 1995 summarizes the planning for waste retrieval and consolidation efforts going into the future. This includes consolidation of the sludge from Tank 241-C-106 with neutralized current acid waste (NCAW) and neutralized cladding removal wastes (NCRW). It also included attachments, Internal Memo 73510-95-017, which described the "Double Shell Tank Waste Consolidation and Retrieval Planning Base Case," dated August

29, 1995. The need for waste consolidation was discussed, and issues/considerations, such as insufficient shielding in valve pits AX-A and AX-B and the underground waste transfer lines, was noted. The planning required numerous transfers of radioactive wastes between various storage tanks as part of the overall consolidation. Although not a point of emphasis in the memo, it was obvious that the integrity of each of the transfer lines must be maintained, in order for the waste products to be transferred.

8.4.2 SL-503 Valve Pit Jumper

One such failure of a transfer line was reported in WHC-SD-RE-TI-222, "Metallurgical Failure of SL-503 Valve Pit Jumper," released on 10/01/1996. Specifically, a leak was detected in the SL-503 waste transfer line in October 1994. The failure in SL-503 occurred within a wall of the valve pit, near a weld between a Hastelloy B nozzle and the carbon steel piping. (The inner and outer transfer piping was fabricated from A53 Type S, Grade B, and A106 Grade B). It was prohibitively difficult to remove the concrete core surrounding the pipe in part because the concrete core drill remained stuck on the core. Further examinations were completed in a hot cell due to the high radiation levels, which were up to 7R/hr γ and 120 Rad/hr uncorrected open window reading.

Macro photographs taken at the ends and sides of the pipe and nozzle evidenced a deposit lining the inside walls of the inner pipe in all views. The depositions made it difficult to be able to directly examine the inner surface of the piping. Nevertheless, a wall thinning of approximately 35 mils was estimated. Boroscopic examinations were made at the location where the carbon steel pipe joined the Hastelloy B nozzle. Following the in-situ boroscopic examinations, the failed section was removed in June of 1996, and shipped to the Pacific Northwest National Laboratory for failure analysis. (The report noted that only limited examination was conducted "in the field" because of the high radiation levels emanating from the pipe, difficulties in accessing the failed region, and the high cost of conducting a more thorough examination.)

The weld and heat affected zone of the carbon steel was much rougher than that for the Hastelloy B nozzle, which was attributed to the effects of surface corrosion. (Actually, carbon steel would be expected to corrode preferentially anytime it is joined to Hastelloy B, as such a connection represents a galvanic couple). The report noted that there was nothing to suggest that this particular failure was related to anything from the exterior surface of the pipeline. The failure appeared to be related to an erosion-related internal corrosion mechanism, which was assisted by the galvanic couple.

Table 1 in that report also noted six previous failures associated with the piping and pump failures in B-Plant/200 East Area Line. These include (a) 10/82 – no description available, (b) 5/83 – no description available, (c) 9/6/84 – 244 A Pump, (d) 9/10/84 – AY02D Jumper (H-2-70774), (e) 10/22/84 – A-B Valve Pit Jumper (H-2-70459), and (f) 11/18/84 – the 233 Line.

8.4.3 241 A-B Valve Pit Jumper & Failure of the 233 Line

Since it was very similar, the background section of the report SL-503 Valve Pit Jumper Failure Analysis summarized the 1985 report, SD-RE-TI-148 Metallurgical Failure Analysis of 241 A-B Valve Pit Jumper," dated September 9,1985 by E.B. Schwenk. The composition of the 241 A-B Valve Pit Jumper pipe was consistent with that of mild steel, having a hardness of approximately 58-60 ksi. There was significant thinning of the pipe walls at certain orientations (6:00 to 9:00 to 12:00, but not 12:00 to 3:00 to 6:00). Analysis of the corrosion products revealed two different types of products, the lighter colored product being hematite, while the darker product, contained 5% Cr and 15 each of Mn, Ni, and Cu, which was probably from stainless steel fines that were pumped through the piping. Thus, the failure of the 241 AB Valve Pit Jumper failure was attributed to an erosion-related corrosion process.

The report also cautions that additional failures could occur in regions of turbulent or high flow, and the author recommended the entire 233 line should be considered for replacement. (This refers back to the failure (f) reported in the above paragraph, which is just upstream of the 241 A-B Valve Pit Jumper.)

8.4.4 SL-119 Saltwell Piping Failure

Failures of the transfer pipelines have also been attributed to external corrosion. WHC-SD-WM-ANAL-014, "S Tank Farm SL-119 Saltwell Piping Failure Analysis Report," which was released 08/05/1994, is one illustration of how external corrosion can cause a transfer line to fail.

The line was built in 1973, and had undergone a number of pressure tests during the course of normal operations. Prior to the failure on January 24, 1992, the most recent pressure test was May 9, 1980. However, there is no documentation to suggest the line was either pressure tested, or used between 1981 and 1992. Hence, the pressure test was the proper course of action before returning that line to service. Water was observed spraying out of a heat trace enclosure when pressure testing began on SL-119. This launched a comprehensive investigation.

The investigations considered both internal and external corrosion. The SL-119 line was coated with coal tar epoxy, wrapped with plastic bubble wrap, and then "totally" encased in polyurethane foam. The soil had a resistivity of 42, 000 ohm-cm. Hence, it appeared the carbon steel line was isolated from the soil and soil corrosion. (Some of the indirect inspection techniques, as discussed in Section 6.4 could be used to determine if there were any breaks within the coatings, such that corrosion currents were flowing into the soil). The investigators considered the possibility of Microbiologically Influenced Corrosion (MIC). However, the attack patterns did not appear similar to that typically observed for MIC. They considered the possibility that the corrosion might have been caused by the remnant of product, which had been transferred from the storage tanks. Pacific Northwest Laboratory personnel examined the failed section, and determined the source was external. It was also noted that the metallurgy of the transfer piping was essentially the same as that of the tanks in the 241-S tank farm, and those had been in service from approximately 1950 to 1980.

The cause of the failure was attributed to the heat tracing system, which allowed water to enter condense, and collect within the steel conduits, and ultimately corrode through the conduit and drip onto the SL-119 itself.

Although it is too early to attribute any causes to the January 2004 failure of the S103 saltwell piping, the investigators will undoubtedly review the SL-119 saltwell piping failure to determine any similarities.

8.4.5 General Comments Regarding Corrosion within the Transfer Lines

The examples above clearly attest to the possibility that the transfer lines can fail, whether through internal corrosion or external corrosion. It is in the best interest to prevent leaks, and simple non destructive inspections and corrosion monitoring can be used to minimize the likelihood of corrosion.

To detect external corrosion, it is possible to use the external corrosion direct assessment methodology, and inspect the transfer pipelines, using above grade (ground) instrumentation. Only a limited number of excavations would be needed to confirm and validate the results from these indirect inspections.

IQRPE's note: document RPP-27097 studies the feasibility of ECDA at Hanford.

From the perspective of internal corrosion, corrosion coupons and electronic probes could be installed at low spots along the pipeline, where fluids are more likely to accumulate (remain). In particular, they could be used to detect changing conditions, which affect the corrosivity of the system. Electronic corrosion probes, such as electrical resistance probes, installed within the transfer lines could provide near real time measures of the corrosion processes, and successive readings would record the cumulative affect of any corrosion processes, which may have occurred between probe readings. However, as a practical matter, such corrosion probes would probably have to be installed through the jumpers at the valve pits.

When erosion is a concern associated with the transfer of radioactive wastes between tanks/facilities, it might be possible to install flush mounted coupons or probes, which are made from a material that would not corrode within the operating conditions / environment. Thus, any metal loss recorded by such instrumentation would be directly related to the erosion processes.

Although not as sensitive, it might also be advantageous to consider placing a number of ultrasonic transducers on the exterior of single wall transfer pipelines, where erosion is anticipated. The wall thickness would be measured versus time. Rapid metal loss over a short period of time may be an indication of erosion.

9.0 SUMMARY AND BEST PRACTICES FOR IMPROVING CORROSION MONITORING PRACTICES

The current status and the best practices for improving the corrosion monitoring practices at Hanford have been divided into two categories – one for DSTs and one for the transfer lines. Sections 9.1 and 9.2 present these summaries and best practices.

9.1 SUMMARY AND BEST PRACTICES FOR ENHANCING MONITORING PROGRAM – DSTS

The corrosion monitoring program for the double shell waste storage tanks at Hanford has been based on collecting and analyzing samples of waste from within the DSTs. The results from these chemical analyses would then be compared to laboratory tests results, which matched chemical compositions of synthetic waste and the associated corrosion rates, as measured in laboratory studies. Unfortunately, it is an expensive process to collect and analyze samples from multiple layers at all the DSTs, and consequently, there can be a significant period of time between samples. If system conditions change for whatever reasons, it is possible that the corrosion processes could become active. Accordingly, it is desirable to have a corrosion monitoring system, which is independent of the fluid sampling program, and can detect the onset of corrosion.

The early efforts to implement a corrosion monitoring program started with corrosion coupons and electrical resistance probes. However, the results were not found to be satisfactory, in part because the corrosion was apparently not being detected, i.e., corrosion rates were approximately zero. Since localized pitting was determined to be the most likely type of corrosion within the double shell tanks, Hanford focused their efforts on trying to develop and implement the relatively new electrochemical noise (EN or ECN) corrosion monitoring technique.

The EN technique uses a three-probe assembly, much like the linear polarization resistance (LPR) technique. However, as opposed to applying a fixed potential and measuring the resultant current, the small voltage and current fluctuations are constantly monitored to determine if there are any patterns, which could be indicative of the onset of corrosion.

There are a couple of major limitations associated with using EN monitoring systems. First, note that each reading is independent of all other corrosion rate measurements. Thus, if a corrosion event occurred between EN measurements, it would not be detected. By continuously reading the probes, such as once every second or two, this limitation can be minimized.
However, massive quantities of data need to be collected and analyzed in order to detect the onset of corrosion. The data processing can become rather complex.

Second, it should be noted that EN is an excellent laboratory tool for measuring corrosion rates, where the variables can be carefully controlled. However, it becomes far more complex to use EN in operating systems, where there can be multiple sources for the noise signals. The crude oil and natural gas production and distribution industry is perhaps the largest group that uses corrosion monitoring instrumentation. Although a few users have installed EN systems, there is still limited acceptance of the technique worldwide, as the technology is not viewed as a mature.

Further work is needed for properly interpreting the signals in industrial settings, as opposed to laboratories, where variables can be better controlled.

The progress in implementing electrochemical noise monitoring systems at Hanford has been documented in reports, including semi-annual EN summary reports. To date the electrochemical noise (EN) monitoring systems have been installed in only 4 out 28 DSTs at Hanford.
The EN monitoring systems are highly dependent upon having an uninterrupted source of power, since data is collected and processes every other second. One of the semiannual EN summary reports noted that no results were available for an extended period of time (several months), when electrical power was disrupted. Clearly, this is not acceptable when trying to confirm that corrosion has not degraded the integrity of a DST. At the very least, corrosion coupons or electrical resistance probes (whose resistance changes when corrosion is active) would provide a measure of active corrosion.

The annual EN summary reports also highlighted the need for additional and continuing laboratory studies to simulate events, which may be occurring within the storage tanks.
These studies would help the EN monitoring team to properly interpret the meaning of the data patterns. Since there can be multiple sources for the electrochemical noise patterns within industrial settings, it will not be a trivial matter to develop the skills to properly interpret the meaning/significance of EN.

It is best practice that the corrosion monitoring systems within the (all) DST waste storage tanks at Hanford employ multiple, independent monitoring techniques. Thus the results from the different, independent monitoring techniques would be used to mutually confirm the results from the other techniques. As such, it is best practice to supplement the present fluid sampling/analysis and EN monitoring system with the use of electrical resistance corrosion probes and the use of corrosion coupons.

Multiple monitoring techniques should be installed within each of the tanks, so that active corrosion can be detected quickly, prior to the onset of any corrosion damage to the interior walls of the DSTs. Similar results from independent monitoring techniques will validate the results.

IQRPE's note: current practice with regard to corrosion monitoring probes is to use multiple techniques.

It is recommended that Hanford design and build new corrosion probe holders, which have both Electrochemical Noise and Electrical Resistance probes for monitoring any corrosion within the sludge at the bottom of the tank, as well as within the liquid supernate above the sludge. As with the present practice, these would be installed through an opening at the top of the tank, i.e., a riser. The shielded electrical wires would lead from the corrosion probes to the top of the probe assembly, where they would be attached to the appropriate automatic data collectors and data storage devices. For the electrochemical noise systems, this could require the establishment of computer systems to control the data collection at each tank, as well as connections to the Hanford LAN, such that the data could be transferred to a central point.

It may be possible to implement a far simpler system for electrical resistance or high-resolution electrical resistance probes. The leads from the probe would go to an automated data collector,

which is physically installed (attached) to any above ground structure near the tank. The automated data collector would be programmed to electronically measure the resistance of the probe at frequencies, such as once an hour. Any events (changing conditions within the tank), which cause corrosion and results in a change in the electrical resistance of the probe, would be recorded. A hand held data logger would then be taken to each of the automated data collectors, and the accumulated data would be uploaded for transfer to a host computer. The corrosion trends would be tracked on the host computer.

It is possible to establish elaborate communications networks for recording and transferring data from electrical resistance or high-resolution electrical resistance probes, much like that, which was done to collect the data for the EN monitoring systems. Such a system would enable near-real time measurements of corrosion rates within each of the tanks from a remote site or office. However, the corrosion rates measured to date have been very low, i.e., less than 1 mpy. Hence, a valid question is poised when asked whether the benefits from establishing a corrosion monitoring and telecommunications network system, which directly transfers all measurements electronically to host computers, is worth the premium cost. If the corrosion rates were significantly higher than the present corrosion rates (less than 1 mpy), and the data interpretations were time-critical, such communications systems could be justified. A more simplistic approach to collecting data from electrical resistance or high-resolution electrical resistance probes is recommended.

In addition to the continuing use of EN monitoring systems and the installation and use of electrical resistance or high-resolution electrical resistance probes, it is considered best practice for Hanford to design and build a coupon holder assembly similar to that used for housing the electrical probes. Both flat corrosion coupons and U-Bend corrosion coupons would be mounted on the assembly, such that they could be removed and replaced at regular time periods, such as semi-annually. Note that this coupon holder assembly described in this paragraph would be independent of the probe assembly. Thus, the removal and replacement of the coupons would not disturb the environments immediately around the EN and ER or High Resolution ER corrosion probes. When removed, the coupons would be cleaned to remove any corrosion products, and the weight loss would be used to determine the general corrosion rate. The depth of any pits would be measured to determine a localized (pitting) corrosion rate, using the standard practices of NACE RP0775.

Additionally, it is considered best practice for the coupon holder assembly to include U-bend coupons. The U-bend coupons are small strips of metal constructed from the same material as the pipeline, but which had been bent into the shape of the letter "U." The bending is a plastic deformation, which introduces high stresses on the metal surfaces – particularly on the extrados (exterior surface of the arch) of the U-bend. This is where stress corrosion cracking is most likely to occur when placed within an environment that is favorable to the development of SCC. (Residual stresses are maintained through a bolt holding the two ends of the coupon together, and which can also be used to secure the U-bend coupons onto the coupon holder assembly). Results from the U-bends would typically be recorded as "Yes/No," indicating whether stress corrosion cracking was or was not observed.

IQRPE's note: in light of document RPP-RPT-28968 from PNNL, the use of U-bend coupons may be unnecessary.

Much effort has gone into the development of the present electrochemical noise monitoring system, both at Hanford and other DOE facilities. However, the technology is not yet sufficiently "mature," as to be the exclusively used corrosion monitoring technique. Instead, further developmental work is needed in order to be able to properly interpret the significance of the observed EN noise patterns. Such work should be conducted under laboratory conditions, where the variables and sources of electrochemical noise can be better controlled.

Hanford is on the leading edge in the development and application of the new technology. However, many unknowns remain in the interpreting of the results. It will be a slow process to develop the databases for properly interpreting field conditions. As such, EN monitoring should be coupled with other monitoring techniques, such as electrical resistance and coupons, for at least the present time.

9.2 SUMMARY AND BEST PRACTICES FOR MONITORING – WITHIN TRANSFER LINES

In addition to monitoring the corrosion processes within the double shell waste storage tanks, the corrosion processes should also be monitored within the transfer pipelines, as failures of transfer lines are not acceptable. Previous failures of transfer lines have been attributed to both internal corrosion and external corrosion, as discussed in Section 8.4. Presently, there is no program for monitoring corrosion within the buried transfer pipelines at Hanford. Consequently, a corrosion monitoring and inspection program is needed for both the interior and exterior surface of the transfer pipelines.

As has been observed in the examination of failed sections of transfer pipe, some of the radioactive debris will remain within the pipelines. It will not be practical to weld new access fitting onto the existing transfer pipelines, whether they have a single wall or have a second wall for containment. However, it is possible to install access fittings and corrosion monitoring on new jumpers and install them in the pits at the tank farms. These relatively small sections of piping are used to direct the transfer of waste products between the designated pipelines for any particular transfer, and it is far easier and more practical to install the monitoring on the jumpers than on the existing pipelines. As such, it is considered best practice that corrosion monitoring instrumentation be installed on new replacement jumpers.

Access fittings would be welded onto new jumpers, before they have gone into service. The type of access fittings would be like those described in Section 5.2 of this report. For the purposes of the monitoring the transfers, it is best practice for three access fittings to be installed, each separated by less than 1 foot between centers. The access fittings should be oriented along the path that water would follow if directed through the jumper. The first access fitting would have a flush mounted corrosion coupon, with the height of the metal coupon corresponding to the relative height of the interior wall of the jumper. The second access fitting should contain a flush-mounted, high-resolution electrical resistance probe, which is electrically connected to an automated data collector. Readings would be collected at regular intervals throughout the transfer, such as once every 15 minutes, depending upon the duration of the transfer. The third access fitting would contain a corrosion probe or a coupon made from stainless steel or some

other inert material, which will not corrode when placed within the fluids that are to be transferred. The stainless steel probe or coupon would be flush mounted, and adjusted to the height of the interior wall of the transfer jumper. Since it has been made from an inert material, any "corrosion," which is measured, would be attributed to erosion of the pipeline material during the transfer – not corrosion. [Note that there is a preference to use corrosion probes rather than coupons, since the probes could remain within the system, providing data, while the coupons would need to be periodically extracted and replaced. Such extractions/replacements are not desirable at Hanford, due to the radioactive nature of the waste products being transported through the pipelines].

The monitoring coupons or instrumentation is flush mounted, such that the conditions along the pipe wall (rather than mid-stream) are observed. Also by virtue of being flush mounted, there does not need to be a separation of 6-10 pipe diameters between the access fittings, since upstream flush-mounted corrosion monitoring instrumentation will not affect the fluid flow and the validity of downstream monitoring results.

Besides the possibility of internal corrosion, the integrity of the transfer pipelines can also be compromised by external corrosion. Examples of such failures were discussed in Section 8.4. A failure of the S103 saltwell piping was just reported in January 2004, and investigations will soon be examining the root cause of that failure. Thus, external corrosion does poise a real threat to the integrity of the transfer pipelines, and as such the pipelines should be inspected to assess the integrity of those lines.

IQRPE's note: the external corrosion threat is increased further in light of the current condition of the cathodic protection systems as identified in document RPP-25299.

External corrosion can occur whenever there are holidays on the exterior coating, the cathodic protection is inadequate, and moisture (water) can wet the exterior surface of the transfer line (or external casing). Instrumentation is available to indirectly examine buried pipelines, such that the precise location, depth of burial, and degree of severity of indications along the length of transfer pipelines can be determined. The indirect inspection techniques include close interval surveys, direct current voltage gradient (DCVG) surveys, pipeline current mapper surveys, soil resistivity surveys, and alternating current voltage gradients (ACVG). When properly conducted, these surveys will identify the location of coating holidays and an estimation of the extent of external corrosion. As an example, current will flow from holidays, or holes on the exterior coating of buried pipe, while the inspection techniques have been developed to detect the associated electromagnetic fields. These indirect inspections of buried sections of pipe are conducted above grade (above the ground), and only require a point of contact with the external surface of the pipeline. It is recommended that such surveys of the exterior surface of the transfer pipelines be conducted and interpreted by a service company, who routinely provides such indirect inspection services. Thus, the follow-up excavations and direct visual examinations would focus upon the segments, where corrosion is indicated. Corrpro® Companies, Inc. is one such company, who can provide the recommended indirect inspection services.

® Corrpro is a registered trademark of Corrpro Companies, Inc., Medina, OH.

IQRPE's note: again, in light of the results of the study provided in RPP-27097, indirect assessment may not be feasible or practical with the cathodic protection system in its current condition.

[The indirect inspections only inspects the exterior surface of buried pipe. The techniques cannot provide any information regarding the interior surface of the piping. The technique cannot be used to assess the exterior surface of transfer piping, if that piping has been encased within a larger pipe. Thus, the indirect inspections should only be used for assessing the integrity of the exterior surface of transfer pipelines, which are in contact with the soil.

10.0 REFERENCES

1. 95-RTI-104 "Double Shell Waste Consolidation and Retrieval Planning Base Case," dated November 2, 1995.

2. WHC-SD-RE-TI-222, "Metallurgical Failure of SL-503 Valve Pit Jumper," approved for release on 10/01/1996.

3. SD-RE-TI-148 Metallurgical Failure Analysis of 241 A-B Valve Pit Jumper," dated September 9.1985 by E.B. Schwenk.

4. WHC-SD-WM-ANAL-014, "S Tank Farm SL-119 Saltwell Piping Failure Analysis Report," which was released 08/05/1994.

5. RPP-5694, A Plan to Develop and Demonstrate Electrochemical Noise Based Corrosion Monitoring System in Hanford Site Waste Tanks, by G.L. Edgemon, August 2000.

6. ARH-ST-111, UC-70 "Compilation of Hanford Corrosion Studies," July 1975 by D.C. Lini.

7. WHC-SD-WM-ER-414, Rev 1, "Hanford Waste Tank System Degradation Mechanisms Report," October 1996 by G.L. Edgemon and R.P. Anantatmula.

8. WHC-SD-WM-TI-77, Rev 0, "Technical Basis for Electrochemical Noise Based Corrosion Monitoring of Underground Nuclear Waste Storage Tanks," by G.L. Edgemon and G.E.C. Bell, March 2001.

9. "Electrochemical Noise Based Corrosion Monitoring: FY 2001 Final Report," by G.L. Edgemon.

10. "Hanford DST Corrosion Monitoring: FY 2002 Mid Year Status Report," by G.L. Edgemon.

11. "Hanford DST Corrosion Monitoring: FY 2003 End of Tear Status Report," by G.L. Edgemon, August 20, 2003.

12. HNF-IP-1266 Section 5.15, Rev 3e, "Chemistry Control Program," February 5, 2003.

13. RPP-7795, Rev 0, *Technical Basis for Chemistry Control Program*, September 18, 2001, which includes the SD-WM-TI-150, "Technical Basis for Waste Tank Corrosion Specifications," by N.W. Kirch, August 24, 1984.

14. TO-270-044 described the procedures for "Transfer from 244-BX to 241-AP-107," August 16, 2003.

15. "Electrochemical Impedance and Noise" by Robert Cottis and Stephen Turgoose, NACE International, Houston, Texas, (1999).

APPENDIX G

SUMMARY OF FINDINGS AND RECOMMENDATIONS

Tables G-1 and G-2 contain a summary table of all conclusions, findings, observations, and recommendations from all DSTAR documents. To determine whether an item is a finding, observation, conclusion, or recommendation, refer to the column entitled "Reference Section & Location."

Table G-1. Summary of Findings and Observations (Bases) From the DSTAR and Supporting Documents. (33 Sheets)

Item	Doc. Number & Title	Conclusion, Finding or Observation	Reference Section & Location
B1	**RPP-18652, Rev. 1** *Buried Pipe Analysis for DST System Integrity Assessment*	No Resultant Findings. Basis for recommendations was concern over shallowness of some pipe burials.	Main Document
B2	**RPP-20556, Rev. 0** *DST Assessment of the Dome Load Program for Double Shell Tanks*	An error was found on the AN-101 DLL. In this case, the DLRSS consists of two sheets. Each sheet contains a totaled load, which when the two are added together, equal the value found on the AN-101 DLL. However, when reviewed closely, the total found on sheet 2 is actually included in the list of loads on sheet 1. The total on sheet 1 already includes the total on sheet 2. Operations was promptly notified of this error, who then requested assistance from engineering. It was discovered to be an data input error and the DLL was revised accordingly. No further action is required with regard to this finding.	Findings Section 7
B3	**RPP-20556, Rev. 0** *DST Assessment of the Dome Load Program for Double Shell Tanks*	Another error was found on the AZ-102 DLL. The value listed on the DLL is 136,105 lbs, while the value listed in the DLRSS is 184,688 lbs. Initially, it could not be determined why the two values were different. Operations was promptly notified of this error, who then requested assistance from engineering. The TFC system engineers determined that a berm (48,583 lbs) had been removed from the tank. Rather than entering the corresponding removal as an entry in the log, the TEPL value was changed directly. While the loading on the tank remained accurate, the tracking of the loading was inadequate. The TEPL value should always match the DLRSS value in order to provide traceability of the dome loading.	Findings Section 7
B4	**RPP-22604, Rev. 0** *IQRPE Evaluation and Documentation of DST Secondary Liner Issues*	The design and construction of the secondary liner is consistent and compatible with its potential service of retaining leaked nuclear waste product from the primary tank. Limits were usually placed on the secondary liner's potential service. It is presumed that these limits were based on its susceptibility to stress corrosion cracking. However, no basis could be found to verify that SSC could penetrate through-wall within one week. The specified limit of one week is planned to be exceeded by the DST emergency pumping guide (HNF-3484). This finding is resolved in this document (RPP-28538) Section 4.10.5.	Conclusions Section 6

Table G-1. Summary of Findings and Observations (Bases) From the DSTAR and Supporting Documents. (33 Sheets)

Item	Doc. Number & Title	Conclusion, Finding or Observation	Reference Section & Location
B5	**RPP-22604, Rev. 0** *IQRPE Evaluation and Documentation of DST Secondary Liner Issues*	While most tanks received high-level NDE to the lower weld of the upper knuckle, AY/AZ tank farms received only visual examination above the first course. This finding is resolved in this document (RPP-28538) Section 4.10.5.	Conclusions Section 6
B6	**RPP-22604, Rev. 0** *IQRPE Evaluation and Documentation of DST Secondary Liner Issues*	Design drawings indicate that the lower knuckle of the secondary liners is not supported. While it is true that the primary lower knuckle is not supported, the difference, in this case, is that the primary knuckle is of a thicker material, which can inherently withstand greater stress. This raises questions with regard to the secondary lower knuckle's ability to retain the applicable loads, which according to the specifications, are the same for the secondary as the primary. This finding is resolved in this document (RPP-28538) Section 4.10.5.	Conclusions Section 6
B7	**RPP-25153, Rev. 1** *DST Waste Compatibility Assessment Report*	Even though tank 241-AN-107 waste chemistry has been out-of-specification since 1984, ultrasonic examination of the tank found no reportable plate crack indications, plate pitting, plate thinning, or weld thinning/pitting/cracking.	Findings Section 6.1
B8	**RPP-25153, Rev. 1** *DST Waste Compatibility Assessment Report*	UT examinations of DSTs have been conducted since 1997. As of February 2006 all 28 DSTs have been examined and the re-examination cycle will continue in April, 2006. None of the tanks has a reportable plate crack indication. Only tank 241-AY-101 has reportable plate pitting at a historical liquid-air interface. All 10 of the tanks indicating corrosion have reportable localized plate thinning with a 10.4 to 20.2% reduction in thickness; when percent reduction figures were given. Within these 10 DSTs there is a subset of four DSTs that also have reportable weld thinning or pitting, of 10 to 16.8%. No DSTs have leaked or are currently leaking.	Findings Section 6.1

Table G-1. Summary of Findings and Observations (Bases) From the DSTAR and Supporting Documents. (33 Sheets)

Item	Doc. Number & Title	Conclusion, Finding or Observation	Reference Section & Location
B9	**RPP-25299, Rev. 0** *IQRPE Assessment of Cathodic Protection for Post 2005 DST Transfer Lines*	**No evident data analysis reports for bimonthly rectifier inspections or annual polarization surveys** Annual cathodic protection survey reports and bi-monthly rectifier inspection reports are not being generated and documented. An analysis of the data from the surveys and the inspections may have been performed, but the analysis reports were not forthcoming. Only the 1995 cathodic protection survey resulted in an analysis report (WHC-SD-WM-RPT-266). These survey analyses are important tools to determine health of CPS and to identify immediate issues with the CPSs. CPS health reports do acknowledge monitoring and maintenance deficiencies in the system and have shown improving trends towards regular monitoring and maintenance activities of the system. However, a transparent detailed analysis of the data is either not readily available or does not exist. The analysis is important in discovering anomalies in the data, the root cause of non-compliant readings, potential systematic trends, and/or immediate attention-required items. Proper maintenance of the CPS requires that analysis of gathered data be performed and reported.	Conclusions Section 12.0
B10	**RPP-25299, Rev. 0** *IQRPE Assessment of Cathodic Protection for Post 2005 DST Transfer Lines*	**Evaluation of native and polarized potential measurements at test stations and Categorization of Post-2005 piping with respect to their coating/insulation/jacketing features.** According to Payer (1984), an important point made by both Ebasco and CH2M HILL Hanford Group, Inc. was that the degree of protection provided for bubble-wrapped pipe was unknown. Cathodic protection is effective only where the cathodic protection current can contact the surfaces of buried piping. The ability for the current to flow to all the outer wetted surfaces of bubble-wrapped and insulated piping is unknown. Ebasco stated they have 'no experience' with bubble-wrapped pipe and therefore could give 'no guarantee' of cathodic protection effectiveness for the piping with this type of outer configuration. Since Ebasco did not have adequate experience with bubble wrap, it can be said that the use of bubble wrap was and probably still is unconventional and that further analyses beyond the scope of this IQRPE assessment is necessary. The suspected effects of bubble wrap or parting agent on the ability to measure the basic corrosion process are evaluated below. Figures 1 thru 17 were developed to shown the various pipeline design features. Additionally, each figure documents expected native potential readings, corrosion processes, and the pipelines possessing	Conclusions Section 12.0

Table G-1. Summary of Findings and Observations (Bases) From the DSTAR and Supporting Documents. (33 Sheets)

Item	Doc. Number & Title	Conclusion, Finding or Observation	Reference Section & Location
		the features described in the figures. Evaluation of Native Potentials and Piping Outer Covering Configurations In the effort to determine the extent of the complex corrosion conditions in the Hanford 200 Areas, this assessment is conducting an evaluation on the various outer covering configurations associated with the post-2005 DST piping. Native, polarized, and cathodic potential measurements from 1981 experimental testing will support the evaluations (Thompson et al. 1981). From 1986 to 1995, Projects B-234, W-020H, and W-430 retrofitted the 241-AN, 241-AW, 241-AY, 241-AZ, and 214-SY tank farm piping with CPSs. In 1986, 241-AP tank farm piping was retrofitted with two CPSs by Project B-340. Project B-234 field testing did not encompass any of the B-340 piping (Ebasco 1982). Basically, Project B-234 conducted preliminary field tests in the 241-AN, 241-AW, 241-AY, 241-AZ, and 241-SY tank farms before initiating the retrofitted cathodic protection designs. The 241-AY tank farm area was tested. The IQRPE has determined through interviews and reviews of as-built drawings and construction specifications the extent of the various piping configurations encountered onsite. Outer layers of coatings, wraps, parting agents (e.g., bubble-wrap, flex duct), insulations, and jacketing were discovered. Coal-tar enamel coating was not encountered when heat tracing was present, since coal-tar enamel integrity could not be ensured. Coal-tar enamel was also not present under insulated portions of pipelines. It was also typical that all carbon steel piping to be exposed to earth backfill would have a factory-applied exterior protective coating consisting of coal tar enamel, felt wrap and cover wrap of kraft paper in accordance with AWWA C203, *Coal-Tar Protective Coatings & Linings for Steel Water Pipelines, Enamel & Tape, Hot Applied.* In addition, piping or sections of piping that were insulated or possessed other coverings that formed a barrier between the carbon steel pipe and the soil typically did not have the coal tar coatings (Appendix D). Fusion bonded epoxy coating was found to be compatible with heat trace. Later (i.e., post-1995 projects like W-058, W-211, W-314, and E-525 typically did not incorporate designs for cathodic protection features if the pipeline was coated, insulated, and jacketed with a waterproof material. However, these 'waterproof' lines are still bonded to other protected and non-protected pipes associated with the CPS. Because there are numerous configurations of piping construction associated with the post-2005 DST pipelines, it is necessary to breakdown the configuration types. Figures 1 thru 17 represent the six outer piping configurations used to protect the	

Table G-1. Summary of Findings and Observations (Bases) From the DSTAR and Supporting Documents. (33 Sheets)

Item	Doc. Number & Title	Conclusion, Finding or Observation	Reference Section & Location
		post-June 2005 DST piping at the Hanford 200 Areas. Each of these configurations will be evaluated for corrosion protection with insight developed by the experimental testing conducted by Battelle in 1981 (Thompson et al. 1981). In Thompson et al. (1981), seven experimental piping cells were constructed. One experimental configuration was identical to Figures 3, 4 and 5 (i.e., a group of four pipes parallel to each other and covered with bubble wrap [parting agent] and polyurethane insulation). Figures 3, 4 and 5 represent approximately 31% of the post-June 2005 piping. In addition, Figures 6 through 17 configurations possess the same basic concepts as the Figures 3, 4, and 5 configurations. Figures 6 through 17 represent approximately 26% of the pipelines. The remaining configurations, Figures 1 and 2, represent approximately 43% of the piping with a protective coating but without insulation and without parting agents. In 1981, various tests were conducted on the experimental piping cells. Native, polarized, and cathodic potentials were measured and recorded for various static and cathodic protection operation setups. The following is a synopsis of the test results representing Figures 3, 4 and 5 configurations (i.e., directly representing 31% of the post-June 2005 piping: 1. Bubble wrap and polyurethane can be applied to piping to form an essentially waterproof coating, at least initially. Native voltage tests conducted up to three weeks after initial final installation configuration of test cell 1 registered 0 V for all four pipes in the test cell, evidencing extreme insulation from ground for all pipes in test cell 1. However, tests conducted by Ebasco 13 months later showed that the highly resistive coating was starting to deteriorate. A native voltage reading was measured for one of the four pipes in the test cell. 2. Bubble wrap and polyurethane applied to test cell 4 (i.e., a test cell identical to test cell 1) resulted in pipe to electrode resistances for two of the pipes in the test cell to be about twice the resistance of a test cell consisting of bare pipe. Defects in the insulation occurred right after the application around these two pipes. 3. Bubble wrap and polyurethane applied to test cell 4 resulted in pipe to electrode resistances for two of the pipes in the test cell to be ½ to 2½ orders of magnitude greater than that of bare pipe. 4. Native test readings of test cell 4 gave indication that one part of the test cell can be defective while 1 ft away from the defective area a pipe can be remain in	

Table G-1. Summary of Findings and Observations (Bases) From the DSTAR and Supporting Documents. (33 Sheets)

Item	Doc. Number & Title	Conclusion, Finding or Observation	Reference Section & Location
		isolation. 5. Inner pipes bounded by the two outer pipes of a test cell received protective cathodic current, even though the amount of current was slightly less than that received by the outer pipes. 6. The presence of bare piping in the vicinity of piping that is bubble wrapped and insulated did not affect the ability of the bubble wrapped and insulated pipe to accept cathodic current to protective potentials. 7. The native potentials became more noble for every one of a set of 12 pipes that were re-measured for native potential three weeks after the initial installations. 8. Native and polarized potentials can be measured for individual piping in close vicinity of other piping provided that the piping under test is not bonded to the nearby piping. Cathodic potentials cannot be differentiated between unbonded piping when the reference electrode is placed in the same position for all individual pipe readings. As reported in Payer (1984), neither Ebasco nor CH2M HILL Hanford Group, Inc. knew the degree of protection provided for bubble wrap pipe. As stated in the report and repeated again, "cathodic protection is effective only where the cathodic protection current can enter the buried steel structure surface." The ability for the cathodic protection current to flow to wet steel surfaces is unknown. Ebasco stated that they had "no experience" with bubble wrap pipe and therefore gave no guarantee of cathodic protection effectiveness for this type of pipe configuration. Though the test cells in Payer (1984) showed that defective bubble wrapped and insulated pipe could receive cathodic current to protective potentials, these potentials are only represented at the defects. Piping within the same test cell could be totally isolated from the earthen electrolyte and still be corroding. During the application of the polyurethane insulation over the bubble wrap, it is evident that either the bubble wrap degrades upon the exothermic reaction of the insulation application and allows an earthen path to the piping, or, the bubble wrap does not present a pure barrier to earthen electrolyte even if the bubble wrap is not degraded. With respect to either scenario, the leakage of earth electrolyte onto the surface of the piping is not uniform. Paths of electrolyte flow must conform to the least resistance path and the electrolyte flow would occur around any obstructions in its path. An unlimited amount of obstruction is presented by the bubble wrap. Pockets of water could be trapped by the	

Table G-1. Summary of Findings and Observations (Bases) From the DSTAR and Supporting Documents. (33 Sheets)

Item	Doc. Number & Title	Conclusion, Finding or Observation	Reference Section & Location
		obstructions. At the entrance to a pit where the electrolyte flow stops, a pool of water underneath a perfectly sealed insulation barrier could form. In this case, limited or no protective current would be available to provide cathodic protection polarization to the piping in the effort to limit corrosion by the electrolyte (Peabody 2001). During annual CPS testing, acceptance testing, or specialized testing conducted in work packages, a portable reference electrode is place over one or more pipes. The permanent reference electrodes are located within 6 in. from the bottom of the pipes. The measured corrosion, polarized and cathodic potentials have never shown 0 V in over 1,000 accesses to test stations situated over bubble-wrapped and insulated piping configurations. This appears to indicate that some portion of the insulation and bubble wrap is defective. Nearby bonded structures that are not covered by the piping configuration could skew the integrated voltage measurement of the bonded piping. The reference electrode will give a mean potential over an area of the surface which is a circle whose diameter is approximately four times the structure to reference electrode distance; the central area will contribute more than the periphery (Morgan 1993). Because the permanent reference electrode is so close to the piping, it appears that nearby bonded structures would have less influence than the portable electrode. The following conclusions can be made for the bubble wrapped and insulated piping of Figures 3, 4, and 5 (i.e., defect free, defect free but water intrusion, and defect scenarios), representing 79 pipes, or 32% of the post-June 2005 piping: • **Figure 3 (no defects)** – Unlikely. One pipe in the row of pipes may have high resistance insulation but the integrated voltage reading from the defects of the other bonded pipes will mask the high resistant configuration. The native and polarized potentials represent an area and not an individual pipe. • **Figure 4 (no defects but water intrusion)** – Possible, but of unknown extent. Corrosion would take place on the pipe but the corrosion would never been seen as a native or polarized potential when more than one bonded pipe is in the area of influence of the reference electrode. • **Figure 5 (defects)** – Highly likely. Confirmed from thousands of tests. Where the defect is located is unknown and which pipe is affected is unknown since all the pipes are bonded. Figures 6, 7 and 8 represent the defect free, defect free but water intrusion, and defect	

Table G-1. Summary of Findings and Observations (Bases) From the DSTAR and Supporting Documents. (33 Sheets)

Item	Doc. Number & Title	Conclusion, Finding or Observation	Reference Section & Location
		scenarios for a piping configuration with a void gap surrounded by a vermiculite concrete insulation. The configuration represents two pipes, or 1% of the post-June 2005 piping. • **Figure 6 (no defects)** – Unlikely, especially since the concrete overlaps a void space. • **Figure 7 (no defects with water intrusion)** – Possible, but of unknown extent. Again, corrosion of piping with this scenario would not be evident by potential readings. • **Figure 8 (defects)** – Likely, but without a massive data background like the bubble wrap/insulation scenario, the extent is impossible to quantity. Figures 9, 10 and 11 represent the defect free, defect free but water intrusion, and defect scenarios for a piping configuration with a void gap created by flex duct surrounded by a polyurethane insulation. The configuration represents 35 pipes, or 14% of the post-June 2005 piping. • **Figure 9 (no defects)** – Unlikely. The mass of data readings in the 241-AP tank farm have never indicate a defect free configuration. However, a defect free configuration for a single pipe would be masked by nearby bonded pipes due to the method of voltage integration by the reference electrode. • **Figure 10 (no defects with water intrusion)** – Possible, but of unknown extent. Again, corrosion of piping with this scenario would not be evident by potential readings. • **Figure 11 (defects)** – Likely. The massive data background seems to indicate a likely scenario even if the data cannot be specific to an individual pipe. Figures 12, 13, and 14 represent the defect free, defect free but water intrusion, and defect scenarios for a piping configuration with a coating, a void gap created by rigid insulation, insulation, and jacketing. This configuration represents 22 pipes, or 8% of the post-June 2005 piping. • **Figure 12 (no defects)** – Unknown. This configuration does not utilize any testing methods to confirm integrity. • **Figure 13 (no defects with water intrusion)** – Unknown as stated. This configuration does not utilize any testing methods to confirm integrity. The corrosion and polarized potential testing would be masked by this condition. • **Figure 14 (defects)** – Unknown. Do not possess any empirical references to	

Table G-1. Summary of Findings and Observations (Bases) From the DSTAR and Supporting Documents. (33 Sheets)

Item	Doc. Number & Title	Conclusion, Finding or Observation	Reference Section & Location
		make a decision. Figures 15, 16, and 17 represent the defect free, defect free but water intrusion, and defect scenarios for a piping configuration with no coating, two layers of insulation and a layer of jacketing. This configuration represents six pipes, or 2% of the post-June 2005 piping. • **Figure 15 (no defects)** – Unknown. This configuration does not utilize any testing methods to confirm integrity. • **Figure 16 (no defects with water intrusion)** – Unknown as stated. This configuration does not utilize any testing methods to confirm integrity. The corrosion and polarized potential testing would be masked by this condition. • **Figure 17 (defects)** – Unknown. Do not possess any empirical references to make a decision. Figures 1 and 2 represent the no defect and defect scenario for a piping configuration with only coating applied. This configuration represents 107 pipes or 43% of the Post 06/05 piping. • **Figure 1 (no defects)** – Highly likely with holiday inspection by factory or at installation. However, it is highly unlikely to remain without defects after burial and service. • **Figure 2 (defects)** – Highly likely. The massive data background seems to indicate a likely scenario even if the data cannot be specific to an individual pipe. **Figures 1 thru 17 are not Shown for Brevity (See RPP-25299 Rev. 0)**	
B11	**RPP-25299, Rev. 0** *IQRPE Assessment of Cathodic Protection for Post 2005 DST Transfer Lines*	**Comparison of Field Results and Design Assumptions with respect to resistivity, steady-state system resistance, and polarization potential limit; anode output design** Upon review of various CPS calculations and field testing results, the following conclusions were evident: • The steady-state resistance of the DC output is at least double the system resistance seen at system startup. This phenomena is seen when comparing acceptance testing results against operational testing results or annual surveys, and the system resistance can be accounted for by the anodic polarization of the cathodic protection anodes. The polarization is more than likely due to the buildup of oxygen around the anodes as time passes since the predominant	Conclusions Section 12.0

Table G-1. Summary of Findings and Observations (Bases) From the DSTAR and Supporting Documents. (33 Sheets)

Item	Doc. Number & Title	Conclusion, Finding or Observation	Reference Section & Location
		reaction at the anodes appears to be the oxidation of water (see Appendix B). The design calculations provided a safety factor by increasing the amperage requirement by a certain amount, though the multiplier was not consistent. The amperage multiplier would proportionally change the voltage calculation. With a doubled steady-state resistance, twice the voltage is required at the positive DC output lug to deliver the same DC output amperage. (E9931; 3-CATH-690). • The 300 mV operating criterion applied by Projects B-234 and B-340 is no longer valid. However, upon a cursory review of the 241-AP tank farm (Project B-340) voltage measurements during the last annual survey (December 2004 through February 2005), at least 100 mVof polarization gain is evidenced when 300 mV of potential gain is measured. • Upon review of cathodic protection design calculation for the 241-AN tank farm W-314 exhauster system drain W314-E-056, *Project W-314 Calculation: Cathodic Protection of Underground Drain Lines from New 241-AN Exhausters*, it is evident that the upper limit of the design voltage (i.e., -1.20 cathodic 'on' voltage), can be exceeded for close-bed anode design since hydrogen formation begins around polarized 'OFF' -1.20 V, and not at 'ON' –1.20 V. Upon review of cathodic protection acceptance test data at test station T(33-50) for the W-314 exhauster drain pipe (RPP-20213), it is evident that even with cathodic 'ON' voltages more negative than -1.65 V, the attendant 'OFF' voltage is less negative than Criterion 2 (i.e., less than -0.85 V). • Upon review of cathodic protection acceptance test data at test station T(33-50) for the W-314 exhauster drain pipe (RPP-20213), it is evident that there is a discrepancy between the assumed resistivity of the design calculation, W314-E-023, *241-AW-Tank Farm* Exhauster *Skid Drain Line Cathodic Protection*, and the required resistivity for the back-calculated 'ON' potential at the test station, using actual cathodic 'ON' potentials from the RPP-20213. The resistivity used in the calculation would have to drop from 30,000 ohm-cm to around 10,500 ohm-cm for the calculated 'ON' voltage to match the 'ON' voltage at the test station. In review of readily available design documentation, it was concluded that the CPSs located above or near the DSTs were designed with an anode output limit of 0.03 amps/anode.	

Table G-1. Summary of Findings and Observations (Bases) From the DSTAR and Supporting Documents. (33 Sheets)

Item	Doc. Number & Title	Conclusion, Finding or Observation	Reference Section & Location
B12	**RPP-25299, Rev. 0** *IQRPE Assessment of Cathodic Protection for Post 2005 DST Transfer Lines*	**Cathodic Protection Documentation Not Located in RMIS** During the information gathering phase of this assessment, it became apparent that documentation of the CPS is not easy to find. Below are some examples of cathodic protection documents not available in RMIS: • Post-1996 test station sketches of underground piping and test station connections. These sketches are buried in the project work packages. • Pre-1995 cathodic protection ATRs. Though the pre-1995 CPSs represent over 80% of the post-2005 CPSs, none of the reports are available from RMIS. Terminal assignment documentation for piping leads and native potential measurements at test station boxes reside in the ATRs and this documentation is not readily available.	Conclusions Section 12.0
B13	**RPP-25299, Rev. 0** *IQRPE Assessment of Cathodic Protection for Post 2005 DST Transfer Lines*	**Proximity of the Secondary Tank around AZ301 Catch Tank to nearby Cathodic Protection System** The underground portion of the secondary containment tank of the Project E-525 AZ-PC-SP-1 condensate distribution system is buried around 17 ft underground. The secondary tank isolates the 702-AZ ventilation system condensate receiver tank from the earthen environment. The secondary tank is fabricated from ¼ in. carbon steel and covered with one coat of MC-Miozinc (3.0 to 5.0 mils dry) and with two coats of MC-Tar (5.0 to 7.0 mils dry for each coat).[6] MC-Miozinc is pigment combination of zinc and micaceous iron oxide providing galvanic and barrier protection to steel surfaces. MC-Tar is a pigment combination of micaceous iron oxide and coal tar pitch providing barrier protection to steel surfaces comparable to coal tar epoxy coating. The secondary tank is not designed with an impressed current cathodic protection feature. Should the underground surface of the tank be subjected to the soil at defects in the coatings, the inner coating will provide galvanic protection to the exposed surfaces of the secondary tank when the zinc particles of the inner coating are concurrently exposed to the soil. The secondary tank is inadvertently bonded to cathodic protection rectifier 41 by means of process condensate line PC-AZ-503A. Consequently, the secondary tank is receiving cathodic protection from the cathodic protection anodes surrounding the tank, if defects are present.	Conclusions Section 12.0

[6] MC-Miozinc and MC-Tar are products of Wasser Corporation, Auburn, Washington.

Table G-1. Summary of Findings and Observations (Bases) From the DSTAR and Supporting Documents. (33 Sheets)

Item	Doc. Number & Title	Conclusion, Finding or Observation	Reference Section & Location
B14	**RPP-25299, Rev. 0** *Assessment of Cathodic Protection for Post 2005 DST Transfer Lines*	**No detailed analysis of 'WaterProof' features of Piping** Twenty-six of the post-2005 pipelines are considered waterproof. These lines were either coated and/or insulated, waterproofed with a fiberglass reinforced plastic jacket, and deemed not to require cathodic protection features. These pipelines were installed under Projects W-058, W-211, and W-314. Despite extensive searching of Hanford documentation and the Washington State Department of Ecology inquiry, IQRPE was unable to obtain any type of formal or informal documentation that dealt with the issue of whether or not to cathodically protect waterproof piping. The official policy change that prescribed these later projects to adopt this practice of pipeline corrosion protection design appears to have occurred between December 1994 and February 1995. Although the 'waterproof' features are predominantly established by waterproof jacketing, the following conclusion is presented for the case of insulation covering a pipe but without waterproof jacketing. It is understood that insulation deterioration over time does not represent waterproof jacketing deterioration over time. However, some aspect of the following conclusion may be applicable to waterproof jacketing: This conclusion is based on the review and interpretation of Thompson et al. (1981). That report concludes that for continuous polyurethane insulation with no defects, a microscopic and totally insignificant amount of current will pass through the foam to the pipes. Underneath the no-defect insulation, the piping does not receive cathodic protection. In the same report, it is evidenced that piping with the defective insulation could be cathodically protected at the defects to polarized potential levels where virtually no corrosion would take place at the defect, (i.e., potentials above –0.85 polarized volts). These voltage tests were conducted about a week after the application of the insulation. The short period of time for the insulation to deteriorate gave evidence to very high cathodic (soil voltage drop inclusive) potentials at reference electrodes placed 4 ft above the test piping. These high cathodic potentials have not been evidenced at the Hanford complex, indicating that the present-day insulation has deteriorated significantly more than the 1981 experimental setups. Nearby bonded structures could skew the present-day cathodic 'ON' potentials, but there are areas where the piping is fairly isolated and no nearby bonded structures are available to lower the cathodic potentials. Where there are defect(s) located upstream of near-perfect insulation, it is plausible for water intrusion from the upstream defects to progress downstream toward the area of near-perfect insulation. As a consequence	Conclusions Section 12.0

Table G-1. Summary of Findings and Observations (Bases) From the DSTAR and Supporting Documents. (33 Sheets)

Item	Doc. Number & Title	Conclusion, Finding or Observation	Reference Section & Location
		of this phenomena, corrosion could take place under near-perfect insulation. Cathodic current presented at the upstream defect has a limited range along the pipe and the effective cathodic protection range is a function of the distance between the insulation and the piping (Peabody 2001).	
B15	**RPP-25299, Rev. 0** *IRQPE Assessment of Cathodic Protection for Post 2005 DST Transfer Lines*	**Inaccessible Test Stations may be Post-2005 test stations** Upon review of the December 2004 to February 2005 annual survey, many test stations were inaccessible or could not be found by reason of 'N/A' on the data sheets. No further clarification as to why the test stations were not accessed. Table 2 lists the post-2005 test stations and the post-2005 piping, at the test station.	Conclusions Section 12.0
B16	**RPP-25299, Rev. 0** *IQRPE Assessment of Cathodic Protection for Post 2005 DST Transfer Lines*	**Inspection of Excavated pipelines** According to Section 1.4 of NACE RP0169-96, special conditions sometimes exist where cathodic protection is ineffective or only partially effective. Such conditions may include elevated temperatures, disbonded coatings, thermal insulating coatings, shielding, bacterial attack, or unusual contaminants in the electrolyte. Hanford cathodic protection history includes all these conditions, especially sulfate-reducing bacteria living under anaerobic conditions. According to Section 6.1.2 of NACE RP0169-96: > The effectiveness of cathodic protection or other external corrosion control measures can be confirmed by visual observation, by measurements of pipe wall thickness, or by use of internal inspection devices. Because such methods are sometimes not practical, meeting any criterion or combination of criteria in this section is evidence that adequate cathodic protection has been achieved. When excavations are made for any purpose, the pipe should be inspected for evidence of corrosion and/or coating condition. Hanford does not have a history of routine pipe inspections when excavations occur to allow the inspections. No database or piping inspections have been found.	Observations Section 10.0
B17	**RPP-25299, Rev. 0** *IQRPE Assessment of Cathodic Protection for Post 2005 DST Transfer Lines*	**Minimum polarization requirements of stainless steel** A minimum polarization shift of 100 mV should be evidenced across stainless steel when applying cathodic protection (see Morgan [1993], p. 40).	Observations Section 10.0

Table G-1. Summary of Findings and Observations (Bases) From the DSTAR and Supporting Documents. (33 Sheets)

Item	Doc. Number & Title	Conclusion, Finding or Observation	Reference Section & Location
B18	**RPP-25299, Rev. 0** *IQRPE Assessment of Cathodic Protection for Post 2005 DST Transfer Lines*	**Voltage Testing Ambiguities with respect to meeting NACE Criterions 2 & 3 for an individual pipeline** When reviewing the native and polarization voltages of any applicable reference document in this assessment (i.e., those documents pertaining to annual testing, acceptance testing, operational testing, or specialized testing), the reviews showed that no matter which stud is chosen at a test station for voltage testing, where the stud represents a specific pipe underneath a test station, the measured voltage is virtually identical for each stud when the reference electrode is not moved. This statement is true when the piping underneath a test station is bonded to each other. Virtually all of the DST transfer piping in the 200 Areas is bonded to nearby piping underneath a test station. The potential measured for each pipe in not specific to the pipe but is specific to where the reference electrode is positioned. The voltages will represent the closest, non-isolated surface, not an individual pipe. Nearby piping within a range of two times the distance between the electrode and the closest, non-isolated piping also contribute to the polarization and native measurements (see Morgan [1993], p. 31-33). The employment of NACE Criterions 2 and 3 is ambiguous when applied to an individual pipe bonded to nearby piping. Despite the lack of definitive native or polarization measurements representing a single pipeline for all but 8 of the 198 test stations (see Table 2), complying with Criterions 2 and 3 for an individual pipeline is judged as if the native and polarization measurements at the test station represent the individual pipe being analyzed for compliance. With respect to the testing methods employed at the Hanford 200 Areas, there is no alternative method of categorizing the level of NACE compliance for an individual pipe, where the individual pipe is bonded to a group of pipes underneath the test station. The voltage readings obtained during the December 2004 to February 2005 survey were not conclusive as to the cathodic protection afforded each identified post-2005 pipeline. Of the 95 Category 1 pipelines evaluated, approximately 67% of the polarized potential readings were necessarily compared against Criterion 3, in which the cathodic polarization calculations were either based on an average native potential of 0.30 V or the highest recorded native potential known at the test station. However, as mentioned previously, the native corrosion potential taken at a test station for a particular pipe could not be solely attributed to the pipe because other bonded pipes or structures could influence the native potential readings. For example, a series of bonded pipes (protected or non-protected) are tested for native potential. Some of the	Observations Section 10.0

Table G-1. Summary of Findings and Observations (Bases) From the DSTAR and Supporting Documents. (33 Sheets)

Item	Doc. Number & Title	Conclusion, Finding or Observation	Reference Section & Location
		bonded pipelines are coated with coal-tar enamel, one bonded auxiliary line is bare, and other bonded lines have insulation around the piping. A native potential relative to a portable CSE is measured for an insulated protected pipe where the electrode is positioned close to the test station. A reading of –0.176 V is measured. A zero native potential reading is expected for a totally 'waterproof' pipe and a more anodic reading would typically be expected for a pipe where the insulation is progressively less waterproof. However, in this scenario, the piping are bonded to each other. As a result, it is not discernible which native potential is truly being measured. A pipe must be completely isolated from nearby pipes and structures for an accurate native potential to be measured. Even with a reference electrode placed within inches of the target pipe, native measurements would be suspect unless the exact geometry and insulation integrity were known. The native potential readings are typically taken close to a test stations or in the test stations where there is an exposed ground surface. No practical direct (over the line) positioning of the CSE is performed, since subterranean surveys of individual pipeline locations are impractical. The native potential reading of the bonded structures associated with each test station are either an average reading from all nearby piping or the reading reflects a nearby pipe or structure which contributes more weight to the mean native integration (see Morgan [1993], p. 33-33). When a reference electrode is positioned at one spot around a test station, documented native and polarized potential readings reveal essentially identical readings for each protected and bonded non-protected pipelines. Native potentials gathered for the 241-SY tank farm ATR (WHC-SD-W430-ATR-001) resulted in readings that were different from one another at the test station. The explanation for the variance in reading is that the tester moved the CSE directly over the pipe (or close to over the pipe, as possible) as instructed by WHC-SD-W430-ATR-001. As long as the piping represented in a test station is somewhat distant from bonded piping and structures, then moving the electrode over the piping reduces the possibility of bonded pipes in the area having a significant influence on the native potential reading for the pipeline being tested. Because of this, as mentioned previously, almost all native potentials are viewed as suspect and compliance with Criterion 3 is dubious. For Category 2 pipes within the voltage fields created by the cathodic anodes, concerns of possible stray current is the rationale for bonding protected pipes to other nearby pipes. The bonding of pipes is good for mitigation of stray current corrosion, but is adverse to obtaining the true	

Table G-1. Summary of Findings and Observations (Bases) From the DSTAR and Supporting Documents. (33 Sheets)

Item	Doc. Number & Title	Conclusion, Finding or Observation	Reference Section & Location
		native potential of each pipe. As a result of the bonding non-protected with protected piping, compliance with Criterion 3 (cathodic polarization gain of at least -100 mV) for each specific pipe in indeterminable. The compliance to Criterion 2 (polarized potential of –0.850 V) is also dubious because the polarized potential represents an integrated measurement of all bonded piping within the measurement range of the reference electrode.	
B19	**RPP-25299, Rev. 0** *IQRPE Assessment of Cathodic Protection for Post 2005 DST Transfer Lines*	**Native Potentials at test stations not found in readily available documentation, or possibly never measured at some test stations** Native corrosion potential values are available for many pipelines but are not up to date. The native corrosion potential average of -0.300 V is used in lieu of documented readings (see Table 2). Documented native corrosion potentials have read at a more anodic potential than the average -0.300 V. The assumption of -0.300 V at non-native documented test stations could result in the calculation of the cathodic polarization gain at those test stations to be less or more than that required by NACE Criteria 3 (0.100 V shift minimum). During the December 2004 to February 2005 survey, 29 test station 'OFF' readings indicated that the cathodic polarization gain of the piping and bonded structures, within the range of the reference electrode voltage integration, were not protected to a level prescribed by Criterion 3 (-0.100 V shift) when employing either an average native potential of –0.3 V or the highest documented native potential. It is uncertain if any of the past native readings are truly representative of present conditions because over time the native potentials should become more noble with the increased formation of corrosion products. If updated native potentials were used, the Criterion 3 noncompliances would probably decrease at the test stations. This observation is subject to a caveat since Observation 3 argues that no native potential is representative of a single pipeline underneath a test station, unless the pipeline is a significant distance away from other bonded structures.	Observations Section 10.0

Table G-1. Summary of Findings and Observations (Bases) From the DSTAR and Supporting Documents. (33 Sheets)

Item	Doc. Number & Title	Conclusion, Finding or Observation	Reference Section & Location
B20	**RPP-25299, Rev. 0** *IQRPE Assessment of Cathodic Protection for Post 2005 DST Transfer Lines*	**Analysis of voltage readings at test stations during 12/94 to 02/05 annual polarization survey** Some polarized potential readings gathered for the December 2004 to February 2005 annual survey indicated noncompliance with NACE Criterion 3. Suspected anomalous voltage readings were also found. See Tables 1, 2, and 3 for details associated with suspect test stations readings. Readings at test stations (78-T2) and (82-T12) in the 241-AP tank farm should be retaken and analyzed. These readings taken per the annual survey are dubious. For test station (78-T2), the 'ON' potential virtually equals the 'OFF' potential for the same pipe, indicating malfunction of the pulse generator switch while previous and following test stations indicated proper function of the pulse generator. The two 'ON' readings should be virtually identical and the two 'OFF' readings should be virtually identical because the pipes are bonded as indicated by the shaded terminal numbers column. For test station (82-T12), the readings for terminals 3 and 4 are dubious since the pipe is bonded with the piping represented by terminals 5 and 6. The 'ON' and 'OFF' readings at terminals 5 and 6 are judged quality numbers since the voltage loop calculations of terminals 5 and 6 for both references electrodes consistently match, with the exception of a sign error in one reading. The 'ON' and 'OFF' potentials recorded in test station T(33-45A&B) of the 241-AW tank farm were very low and lower than the average native potential (since no recorded potential was found). Virtually no current is being received by the structures underneath the test station. The anodes near this test station should be tested for current output at the appropriate anode distribution box. The anode current measurement box that was utilized during the ATPs for Project W-314 (the 241-AN and 241-AW tank farms exhauster drain systems) should be utilized to measure anode current, unless an alternative measurement method is presented. Test station T(41-2) datasheet readings in the 241-AZ tank farm indicate the 'OFF' potential was more positive than the 'ON' potential. Additionally, both voltage readings were less positive than the soil-to-pipe native potential. These anomalous conditions indicate a physical configuration aberration from the intended CPS design. It is recommended that this test station be checked in the field.	Observations Section 10.0

[7] FWS is an abbreviation for Field Work Supervisor.

Table G-1. Summary of Findings and Observations (Bases) From the DSTAR and Supporting Documents. (33 Sheets)

Item	Doc. Number & Title	Conclusion, Finding or Observation	Reference Section & Location
		The CPS survey to meet the 3-CATH-690 procedure requirements cannot be completed satisfactorily at Sections 5.9 (acceptance test criteria) and 5.10 (review) without native potentials measured and recorded for each test station. The first bullet of Step 5.10.2 of that procedure reads as follows: FWS[7] REVIEW AND ENSURE the following: • Completed Data Sheets meet the acceptance criteria. The acceptance criteria cannot be met without readily available native potentials to compare against the annual test results. There is no evidence of such a document being available for the comparisons.	
B21	**RPP-25299, Rev. 0** *IQRPE Assessment of Cathodic Protection for Post 2005 DST Transfer Lines*	**Anode output limitation of 0.03 amp/anode not being employed in 241-AP tank farm, and limitation being exceeded by 50% in A241-N tank farm** In the 241-AP tank farm, the amperage outputs from cathodic protection anodes do not match the Ebasco design criterion of 0.03 amps/anode. Additionally, Battelle was involved in the formulation of the amperage output design (Payer [1984]; Thompson et al. [1981], *Analysis of Complex Corrosion Conditions Project B-234*). The 241-AP tank farm anodes are outputting an average of 0.125 and 0.182 amps/anode. The 241-AP tank farm CPS was installed under Project B-340 in 1986 (B-340-ATR-06). The design criteria for Project B-340 was not located by this assessment. The 241-AP tank farm W-340-C4 construction specification (B-340-C4, *Construction Specification for Primary and Secondary Steel Tanks*) for the primary and secondary tanks was reviewed for the bonding of the rebar in the concrete to the tanks. No reference to testing for continuity of rebar bonding was made. The 241-AP tank farm cathodic protection design criteria will probably match the Ebasco 0.03 amps/anode design because of the following observations: • Anodes in 241-AP tank farm are located over the DSTs and near DSTs • Project B-234 and 241-AP tank farm Project B-340 were installed the same year. Table 4 shows average anode outputs for all the DST farms during the December 2004 to February 2005 survey. **Table Omitted for Brevity (See RPP-25299 Rev. 0)** During the initial design process for the retro-fitting of CPSs onto existing piping in the 241-AW, 241-AZ, 241-AN, and 241-SY tank farms, the Ebasco design criterion was formulated. The 241-AY tank farm was not subject to field testing by Ebasco but the design criterion is the same for the 241-AY tank farm was as for the 241-AW,	Observations Section 10.0

Table G-1. Summary of Findings and Observations (Bases) From the DSTAR and Supporting Documents. (33 Sheets)

Item	Doc. Number & Title	Conclusion, Finding or Observation	Reference Section & Location
		241-AZ, 241-AN, and 241-SY tank farms. The criterion was originally implemented under Project B-234 and then later under Projects W-020H and W-430. Amperage output for each individual anode was established at 0.03 amps for the following reason: Voltage appearing at the concrete surface of the DSTs is directly proportional to the amount of amperage emanating from nearby anodes. If the rebar steel in the concrete is neither bonded to the tanks nor bonded to the negative side of a cathodic protection rectifier and if too high a voltage appears at the surface of the concrete, then the rebar may possibly pick up and then discharge cathodic protection current in the form of stray current corrosion (Ebasco [1982]; Ebasco [1983a]; Ebasco [1983b], "DOE Hanford Project Stray Current Effect on Storage Tanks 200 East Area, A-Tank Farm & Lines"). As an example, for a single 8-ft-long vertical anode discharging 0.03 amps in 40,000 ohm-cm soil and located 10 ft away from a tank, the voltage presented at the surface of the encasement concrete is calculated to be approximately 0.58 V (Peabody [2001], *Peabody's Control of Pipeline Corrosion*). At 0.18 amps, the voltage at the surface of the concrete increases to 3.46 V. Concrete, particularly concrete in which the steel is corroding, has a comparatively low resistivity (i.e., from 3,000 to 20,000 ohm-cm) (Morgan [1993], p. 244). Since many DST structures have been tested continuous with the negative side of their cathodic protection rectifiers (Report 9455666, *Tank Farm Baseline Cathodic Protection Surveys*), the voltage projections appear to be realistic since the DST is not acting as a shield and the concrete will generally have a lower resistivity than the Hanford soil around the DST. The voltage gradient of four vertical and horizontal arrangements of individual anodes is shown Table 5. **Table Omitted for Brevity (See RPP-25299 Rev. 0)** In concrete, steel polarizes to resist either current collection or current discharge (Ebasco 1983b). Since the 241-AP tank farm rectifiers are averaging between 0.125 to 0.182 amps per anode, the voltage presented on the surface of the concrete encasement is proportionally greater by a factor of 4.8 to 6.1, or the CSE 'ON' voltage measurement would be -2.8 -0.2 = -3.1 volts to -3.5 - 0.2 = -3.7 V at the concrete surface, assuming a rebar corrosion potential of –0.2 V (Peabody 2001) and the rebar is near the concrete surface. At the high anode current conditions, the ability for the rebar in the concrete to resist current collection or current discharge is significantly diminished. As seen in this observation, Rectifiers 13, R1 and R2 are significantly above the Ebasco 0.03 amp/anode design value.	

Table G-1. Summary of Findings and Observations (Bases) From the DSTAR and Supporting Documents. (33 Sheets)

Item	Doc. Number & Title	Conclusion, Finding or Observation	Reference Section & Location
		Below is a recent 11-year history of initiation of high anode outputs for the DSTs, and then the lowering of anode outputs to meet the 0.03 amp/anode design criteria for all the DSTs except those in the 241-AP tank farm. The following statements were written in the CorrPro Company report 9455666 during the compilation of CPS data during their June and July 1994 field survey work: • The reinforced concrete tanks are also included as part of the structure due to their inadvertent connection and bonding with the piping electrically. The commissioning report for AP Tank Farm indicated electrical continuity between the piping and the tanks. Flange insulating kits were not found called out on any of the above listed drawings to indicate an intent for isolation of the piping from the tanks. • All the tanks indicated electrical continuity to the piping. There is no practical way to test the rebar for electrical continuity without excavating the tanks and drilling or hammering into the concrete to the rebar. This method of testing is sometimes more damaging than the corrosion. • The tanks that were tested during our survey were all found bonded into the cathodic protection system and receiving some protection. Based on standard construction photographs, construction drawings, the large rebar size, and our experience with similar large structures such as bridges, the rebar is assumed to be redundantly bonded into the tanks and piping. Flange insulator kits were not included on any of the cathodic protection design drawings to provide for electrical isolation of the piping. Consequently, CorrPro recommended the following adjustments to the rectifier outputs of the CPS: • Rectifier R1 (241-AP tank farm) – Set rectifier output near 31 V 18 amps • Rectifier R2 (241-AP tank farm) – Set rectifier output near 95 V 22 amps • Rectifier 11 (241-AZ tank farm) – Set rectifier output near maximum amperage output (either 50 V or 6 amps) • Rectifier 13 (241-AN tank farm) – Set rectifier output near maximum ampere output (12 amps) • Rectifier 31 (241-AY tank farm) – Set rectifier output near maximum amperage (6 amps). These changes were implemented and CorrPro surveyed the systems again during	

Table G-1. Summary of Findings and Observations (Bases) From the DSTAR and Supporting Documents. (33 Sheets)

Item	Doc. Number & Title	Conclusion, Finding or Observation	Reference Section & Location
		January 1995. The re-survey report was not located, but WHC-SD-WM-RPT-266, *1995 Annual Cathodic Protection Survey Report for the Hanford 200 Area*, does reference DC output data for rectifiers R1, R2, and 19. Based on these 1995 report numbers and the projection of the amp/anode output for rectifiers 13, 31, and 11 with the CorrPro recommendation, the January 1995 amp/anode output is shown below: • Rectifier 13 – 0.129 (projection of recommendation) • Rectifier R1 – 0.369 (1995 report) • Rectifier R2 – 0.547 (1995 report) • Rectifier 19 – 0.126 (1995 report) • Rectifier 31 – 0.058 (projection of recommendation) • Rectifier 11 – 0.158 (projection of recommendation). All of the January 1995 outputs were considerably above the 0.030 amp/anode design parameter. Since early 1995, the average anode outputs of all the DSTs, except those in the 241-AP tank farm, have been dropped to a value closer to the original design criteria. This was a consequence of amending each rectifier output to accommodate new branches to the rectifier systems, to accommodate the replacement of the original rectifiers, and to accommodate the original design criteria.	
B22	**RPP-25299, Rev. 0** *IQRPE Assessment of Cathodic Protection for Post 2005 DST Transfer Lines*	**Individual anode outputs not verified during ATPs** Upon review of the readily available design criteria and readily available ATRs for the CPSs, the 0.03 amp/anode limitation above the DSTs was not verified for 509 of the 555 DST farm anodes (92%), despite being in service from 10 to 19 years of operation. The acceptance and operating specifications have always dealt with meeting NACE Criterions 1, 2 and 3 voltage protection criteria, while ignoring the anode output specification.	Observations Section 10.0
B23	**RPP-25299, Rev. 0** *IQRPE Assessment of Cathodic Protection for Post 2005 DST Transfer Lines*	**Procedure Inadequacy for Resistance Testing at Test Stations** The 3-CATH-690 Rev. A-2 survey datasheet does not have enough room in the test station column of the data sheets to record the continuity of all the piping in a test station. Performance of the survey against 3-CATH-690 Rev. A-0, in the measurement of resistance between piping, was inadequate. The only resistance measurements conducted and recorded were resistance measurements between the two leads of one pipe. The resistance measurements are useful to monitor the physical bonding of the buried pipelines. The bonding is not accessible for visual inspections.	Observations Section 10.0

Table G-1. Summary of Findings and Observations (Bases) From the DSTAR and Supporting Documents. (33 Sheets)

Item	Doc. Number & Title	Conclusion, Finding or Observation	Reference Section & Location
B24	**RPP-25299, Rev. 0** *IQRPE Assessment of Cathodic Protection for Post 2005 DST Transfer Lines*	**Frequency of Bimonthly Rectifier Inspections and Annual Polarization Testing not being completed per WAC-173-303-630** A review of the following PERs indicate a lack of priority given to maintenance/monitoring of the CPS: • PER-2002-3158, *Periodicity Exceeded for Cathodic Protection System Inspection* • PER-2002-3375, *Bimonthly Cathodic Protection Overdue Multiple Farms* • PER-2002-5748, *241A Farm Cathodic Protection* • PER-2002-6192, *Waste Transfer Cathodic Protection* • PER-2002-6314, *Rectifier Number 7 in 241AY Farm O/S* • PER-2003-3643, *Annual Cathodic Protection System Checks* • PER-2003-3803, *Periodicity Exceeded for Cathodic Protection System Inspection* • PER-2003-4365, *Bimonthly Inspection Missed* • PER-2003-5187, *Cathodic Systems have not been able to be Operated for 10 & 1 Half Days* • PER-2004-1006, *Cathodic Protection Rectifier Maintenance in Cathodic Protection Facilities* • PER-2004-5530, *Increasing Liability Due to Failure to Perform Annual Inspection of the Cathodic Protection System* • PER-2004-5734, *Cathodic Protection Annual Polarization Surveys and Bimonthly Rectifier Inspections on all Operating Cathodic Protection Rectifiers have been Deferred Since 2001.* Currently, there are no major open PERs on the CPS. A review of the bi-monthly rectifier inspections showed that inspections were conducted on a regular routine up through 2003. Thereafter, the bi-monthly inspections were not regular, sometimes extending up to five months between inspections. In addition, the cathodic protection test stations are scheduled to be inspected annually. A review of the DST CPS annual surveys showed recent annual surveys being conducted for 1995, 1996, 1997, 1998, 1999, 2000, 2002, and 2004. The 2001 and 2003 annual surveys were not performed.	Findings Section 11.0

Table G-1. Summary of Findings and Observations (Bases) From the DSTAR and Supporting Documents. (33 Sheets)

Item	Doc. Number & Title	Conclusion, Finding or Observation	Reference Section & Location
B25	**RPP-27097, Rev. 0** *DST Waste Transfer Line Encasement Integrity Assessment Technology Study*	The last integrity assessment of the DST waste transfer system was performed in 1997, and documented in HNF-SD-WM-ER-623. That report concluded that the secondary containment system is sound. However, past experience indicates that heat-traced pipelines with no cathodic protection are at risk of premature degradation of the external coating, making them more prone to external corrosion.	Observations Section 5.1
B26	**RPP-27097, Rev. 0** *DST Waste Transfer Line Encasement Integrity Assessment Technology Study*	Annual cathodic protection system surveys are mandated by WAC-173-303-640. Pipe-to-soil potential measurements are currently taken at applicable test stations to confirm the effectiveness of the cathodic protection system. However, test station surveys commonly give a false indication of the effectiveness of a cathodic protection system, leading to a situation where test station surveys indicate adequate cathodic protection levels, when the pipeline may be actively corroding at areas remote from the test station. CIPS is the only method available to precisely measure the effectiveness of the cathodic protection system. The CIPS method allows collection of pipe-to-soil potential along the full length of the pipeline. Note, however, that it is generally accepted that CIPS does not work properly as the complexity of the pipeline increases. It is also well known that for a parallel pipeline system, all forms of CIPS will pick up the combined potential variations of all the pipelines, making interpretation very complex, if not impossible.	Observations Section 5.1
B27	**RPP-27591, Rev. 0** *DST System Pipeline Integrity Assessment*	Exterior protective coating materials are adequate for protecting the outer surface of carbon steel and stainless steel pipes in contact with soil from corrosion due to alkaline water that infiltrates the soil occasionally providing defects in the coatings do not accelerate corrosion too substantially when cathodic protection current is not applied. However, the integrity of exterior protective coatings following final burial in the soil cannot be verified and is considered suspect.	Observations Section 5.1.3
B28	**RPP-27591, Rev. 0** *DST System Pipeline Integrity Assessment*	It was generally implied in RPP-25153 that certain insulation configurations prevent water infiltration and consequent contact with the pipe exterior surface. This was concluded from a generalization that all pre-1995 bubble wrapped, sprayed polyurethane insulated DST system waste transfer lines do not have a protective coating applied to the exterior surface of the pipe, and that per RPP-25153, sprayed polyurethane insulation material has an apparent resistance to water intrusion. However, according to Barlo et al. (1981), the degree of protection provided for bubble-wrapped pipe was unknown. Likewise, RPP-25299 states that during annual cathodic protection system testing, acceptance testing or specialized testing conducted	Observations Section 5.1.3

Table G-1. Summary of Findings and Observations (Bases) From the DSTAR and Supporting Documents. (33 Sheets)

Item	Doc. Number & Title	Conclusion, Finding or Observation	Reference Section & Location
		in work packages, measured corrosion potentials, polarized potentials and cathodic potentials have never shown a zero voltage in over 1,000 accesses to test stations situated over bubble-wrapped and insulated piping configurations. The indication is that some portion of the insulation and bubble wrap may be defective. Therefore, the integrity of bubble wrapped sprayed polyurethane insulation following final burial in the soil cannot be verified and is considered suspect.	
B29	**RPP-27591, Rev. 0** *DST System Pipeline Integrity Assessment*	Per TFC-ENG-STD-26, flushing with 1.5 line volumes of preferably hot inhibited raw water following transfer of concentrated supernate wastes or transfers/slurries, including cross-site transfer lines is required. However, based on informal undocumented information, waste transfer line flushes may not be performed following all waste transfers, and only a few of these flushes have been labeled as caustic flushes. Unless the flushing solution is caustic, which there are no indications of it being, residual raw water would be more corrosive to the carbon steel pipelines than residual dilute highly caustic high-level waste.	Observations Section 5.1.3
B30	**RPP-27591, Rev. 0** *DST System Pipeline Integrity Assessment*	Based on a lack of empirical test data obtained to established relevant corrosion/erosion allowances or rates for DST system waste transfer lines, or relevant data points established from failed/corroded/eroded pipeline analyses, ERUL determination is an estimate only, and should not be used to make programmatic decisions for maintenance to or replacement of DST system waste transfer lines.	Observations Section 5.1.8
B31	Not Used		
B32	**RPP-28538, Rev. 0** *Double Shell Tank Integrity Assessment Report, HFFACO M-48-14*	Appendix E contains the raw IQRPE review notes for in-tank videos. Many of the tanks exhibit notable vapor space corrosion, which may or may not be due to waste storage operations (see the last paragraph of Section 4.9.2), but these indications are an area of potential concern. The following tanks exhibited the most apparently extensive vapor space corrosion (see Recommendation 4.14.5): • 241-AN-101 (ref. Video #9394, 2002) • 241-AN-103 (ref. Video #9400, 2002) • 241-AN-104 (ref. Video #8862, 2002) • 241-AN-107 (ref. Video #9620, 2002 • 241-AP-102 (ref. Video #9210, 2002) • 241-AP-104 (ref. Video #10038, 1997)	Observations Section 4.13.1

Table G-1. Summary of Findings and Observations (Bases) From the DSTAR and Supporting Documents. (33 Sheets)

Item	Doc. Number & Title	Conclusion, Finding or Observation	Reference Section & Location
		• 241-AP-107 (ref. Video #8503[1997], #9341[2002]) • 241-AP-108 (ref. Video #9343, 2002) • 241-AW-101 (ref. Video #9150, 2001) • 241-AW-102 (ref. Video #9151, 2001) • 241-AW-105 (ref. Video #9670, 2001).	
B33	**RPP-28538, Rev. 0** *Double Shell Tank Integrity Assessment Report, HFFACO M-48-14*	RPP-8212, *Visual Inspection Plan for Double Shell Tank Farms*, is less of a plan and more of a schedule. Engineering Task Plans generally provide criteria. This plan does not provide criteria by which one can determine the standards by which video inspections can be successfully performed. There is also no guidance on what to do if flaws are found (see Recommendation 4.14.9).	Observations Section 4.13.2
B34	**RPP-28538, Rev. 0** *Double Shell Tank Integrity Assessment Report, HFFACO M-48-14*	Each inspection activity, whether it is UT or video of some kind, is generally treated independently from all other inspection activities. Where UT would allow the quantification of observed anomalies, it was not performed because UT is generally performed prior to video. As a matter of good practice, the video should drive the UT inspection such that observed anomalies may be further quantified with UT equipment.	Observations Section 4.13.3
B35	**RPP-28538, Rev. 0** *Double Shell Tank Integrity Assessment Report, HFFACO M-48-14*	As discussed in Section 4.10, failure of the refractory concrete will not result in a catastrophic failure of the primary tank. The failure mechanism of the refractory is considered to be its exposure to tank waste in the event of a leak. As the properties of the refractory are possibly changed by exposure to tank waste in the event of a leak, plastic deformations of the primary tank may occur that would result in a new stress condition. This may affect allowable loads on the tank (see Recommendation 4.14.1).	Observations Section 4.13.4
B36	**RPP-28538, Rev. 0** *Double Shell Tank Integrity Assessment Report, HFFACO M-48-14*	While there are some moves to increase the frequency of UT examinations for the tanks, this assessment could not technically justify an increase. The resolution of the UT measurements is such that at the currently measured corrosion rates, significant changes in wall thickness will not be detectible for approximately 10 years. On the other hand, the TFC decision to double the area of UT inspection is beneficial in that it will allow a more accurate statistical projection of potential worst-case defects (see Recommendation 4.14.2).	Observations Section 4.13.5
B37	**RPP-28538, Rev. 0** *Double Shell Tank Integrity Assessment Report, HFFACO M-48-14*	The analysis found in RPP-ASMT-27936, which resulted from recommendations from RPP-22604, points out that the 241-AY farm tanks have secondary lower knuckle plate thickness of ¼ in. The analysis structurally analyzes the knuckle to a	Observations Section 4.13.6

Table G-1. Summary of Findings and Observations (Bases) From the DSTAR and Supporting Documents. (33 Sheets)

Item	Doc. Number & Title	Conclusion, Finding or Observation	Reference Section & Location
	Report, HFFACO M-48-14	1.77 SpG for the waste. Because leaked waste comes from the primary tank, this limits the specific gravity of 241-AY farm primary tank waste to 1.77 SpG.	
B38	**RPP-28538, Rev. 0** *Double Shell Tank Integrity Assessment Report, HFFACO M-48-14*	In Section 4.9.1 (and Table 4-9), it is pointed out that acceptable wall thinning for UT examinations is 20% of the nominal wall thickness. It is also pointed out that structural analyses discussed in Section 4.10 utilize a 0.060-in. corrosion allowance. A disparity exists between the 20% wall thinning acceptance criteria and the 0.060-in. corrosion allowance on the 0.375-in. plate on the DST primary shell. A 20% wall thickness loss is greater than the 0.060 in. corrosion allowance for the 0.375-in. plate. This is complicated by the fact that the structural analyses are based on uniform reduction in wall thickness, but the UT results only provide localized wall thinning information. A better method to use the UT data to statistically establish average plate thickness is needed for more comprehensive assessment of these issues. Nevertheless, allowable wall thinning should not be greater than the corrosion allowance used in the structural analyses unless a minimum wall thickness analysis is performed for the DSTs that provides a basis for an allowable 20% reduction in thickness of the 0.375-in. plate. Without a structural analysis identifying minimum wall thickness requirements, and a determination of the actual average plate thickness, it is conceivable that a tank with wall thickness measurements having less than a 20% loss will not be structurally sound, yet no action will be taken. When the upcoming PNNL analysis of minimum design wall thicknesses is issued, the TFC should consider revising the UT inspection criteria to correlate with the plate specific minimum wall thickness requirements, as well as institute a statistical determination of average plate thickness from the UT data (see Recommendation 4.14.7).	Observations Section 4.13.7

Table G-1. Summary of Findings and Observations (Bases) From the DSTAR and Supporting Documents. (33 Sheets)

Item	Doc. Number & Title	Conclusion, Finding or Observation	Reference Section & Location
B39	**RPP-28538, Rev. 0** *Double Shell Tank Integrity Assessment Report, HFFACO M-48-14*	As a follow-up to the previous finding, the data indicates that on plate #1 of the tank 241-SY-101 primary shell and based on the minimum measured thickness of 0.306 in., the tank has exceeded its corrosion allowance by over 2% in some localized areas. Based on the average minimum wall thickness of 0.319 in., and without knowing the overall average plate thickness (as opposed to the average of the minimum thickness readings), then for structural analysis purposes, plate #1 is potentially only 1% away from exceeding its corrosion allowance. Using a calculated corrosion rate of 1.8 mils/yr, and assuming the present average minimum represents the average overall plate thickness, the tank is projected to exceed its corrosion allowance on plate 1 in the year 2008. The actual UT data should be statistically examined to provide a better representation of the average plate #1 thickness, since while the above assessment is necessary in the absence of ameliorating information, it may be overly conservative (see Recommendation 4.14.8).	Observations Section 4.13.8
B40	**RPP-28538, Rev. 0** *Double Shell Tank Integrity Assessment Report, HFFACO M-48-14*	Several gouges were observed in the annulus videos for AY-101. The history of this tank with regard to external corrosion on the primary tank is well known. However, the certified tank inspector observed some "gouges" in the primary tank wall that were mentioned in RPP-7814, *Double Shell Tank Integrity Assessment Program Corrosion Report on 241-AY-101.* Resulting recommendations from that report need to be carried out.	Observations Section 4.13.9
B41	**RPP-28538, Rev. 0** *Double Shell Tank Integrity Assessment Report, HFFACO M-48-14*	Video reviews of the AW-106 (noted as "areas of interest" in Appendix E) tank annulus may show evidence of in-leakage into the annulus through some pits. The scope of this video and applicability to the DST secondary liner is in question. This video should be obtained by TFC engineers, and reviewed and documented in detail.	Observations Section 4.13.10
B42	**RPP-28538, Rev. 0** *Double Shell Tank Integrity Assessment Report, HFFACO M-48-14*	Review of pit photographs and previous integrity assessment reports reveals that the pits are generally in good shape. Some pits are coated with epoxy paint; others are coated with polyurea or lined with stainless steel. The latter coatings are highly durable and can withstand drops and strikes from jumpers. Epoxy paint is susceptible to damage from contact with jumpers during installation or storage on the floor of the pit (see Recommendation 6.11.2-2).	Observations Section 6.11
B43	**RPP-28538, Rev. 0** *Double Shell Tank Integrity Assessment Report, HFFACO M-48-14*	A program or specification could not be located that identified inspection and cleaning requirements or frequencies for the pit coatings. The inspection frequencies and methods would be based on the type and durability of the respective coating (see Recommendation 6.11.2-1).	Observations Section 6.11

Table G-1. Summary of Findings and Observations (Bases) From the DSTAR and Supporting Documents. (33 Sheets)

Item	Doc. Number & Title	Conclusion, Finding or Observation	Reference Section & Location
B44	**RPP-28538, Rev. 0** *Double Shell Tank Integrity Assessment Report, HFFACO M-48-14*	A schedule for future assessment was not found in the existing integrity assessment for this tank (see Recommendation 7.12.1).	Observations Section 7.11
B45	**RPP-28538, Rev. 0** *Double Shell Tank Integrity Assessment Report, HFFACO M-48-14*	Since the tank is still new and project files readily accessible, capturing of any actual wall thickness measurements of the primary and secondary tanks shells would be beneficial to future assessment activities (see Recommendation 7.12.2).	Observations Section 7.11
B46	**RPP-28538, Rev. 0** *Double Shell Tank Integrity Assessment Report, HFFACO M-48-14*	The secondary tank was not structurally analyzed for liquid fill. The required shell thickness for the primary tank containing liquid is analyzed to 3/16 in. minimum. The required shell thickness to retain the soil load is also 3/16 in. Condensate leakage into the secondary tank is expected to result in a reversal of some of the stresses due to the soil load, thus reducing the stress in the secondary tank shell. However, it is best practice to analyze the secondary tank for containment of leaked condensate from the primary tank, because this is its primary function.	Observations Section 7.11
B47	**RPP-28538, Rev. 0** *Double Shell Tank Integrity Assessment Report, HFFACO M-48-14*	PNNL-15415 is considered to contain valuable insights into determining the statistical representativeness of the UT examinations. The analysis in the document has been completed for two tanks, but must be strategically extended to the remaining 26 tanks, since the waste in the tanks is generally not homogeneous. The document outlines methodologies for rounding out this determination for all 28 DSTs (see Recommendation 9.2.1.4).	Observations Section 9.2.1.3

Table G-1. Summary of Findings and Observations (Bases) From the DSTAR and Supporting Documents. (33 Sheets)

Item	Doc. Number & Title	Conclusion, Finding or Observation	Reference Section & Location
B48	**RPP-28538, Rev. 0** *Double Shell Tank Integrity Assessment Report, HFFACO M-48-14*	Due to the configuration of the primary tank installations, there is no known technology that will provide better or more extensive data than the TSAFT and extended arm systems. The area of maximum tensile stress is resting on the refractory concrete and is generally inaccessible to direct measurement, except where air slots are available. The TFC is therefore left to the capabilities of the TSAFT and extended arm technologies. While crack detection sensitivity is good, crack-dimensioning capability is restricted. Unless a crack is identified that is greater than 0.050 in. in size, it cannot be quantified as being below that dimension. No action has been identified in the event of a TSAFT crack indication that is located outside of the extended arm reach. Since, under certain conditions the crack could be of any size less than or equal to 0.050 in., it would still have to be reported at 0.050 in., even if it were actually much smaller (i.e., crack delectability is more sensitive than crack dimensionability). Should there ever be a TSAFT indication in the area of maximum stress, it will be difficult to base the tank's fitness-for-use on anything other than its leak status. If such a defect were detected (none of the six DST lower knuckle examinations had any crack-like indications), the only recourse would be increased UT surveillance frequency to determine if the defect was growing (see Recommendation 9.2.2.3-1).	Observations Section 9.2.2.1
B49	**RPP-28538, Rev. 0** *Double Shell Tank Integrity Assessment Report, HFFACO M-48-14*	RPP-RPT-28968 reports on recent laboratory testing regarding SCC in the DSTs. It is apparent that the probability of SCC initiating in the post-weld stress relieved primary tank shell material is very low. Further evaluation could lead to the conclusion that TSAFT examination is no longer required (see Recommendation 9.2.2.3-2).	Observations Section 9.2.2.1
B50	**RPP-28538, Rev. 0** *Double Shell Tank Integrity Assessment Report, HFFACO M-48-14*	Video inspection of the primary tank interior is challenging due to the nature of the video. A certified inspector without a camera would normally perform a commercial industry tank inspection. The inspector would hold a light to the surface and look for abnormal indications and shadows. This is sometimes called 'profiling the surface.' A video inspection provides a two-dimensional view of the tank walls. The success of a video inspection depends on several factors including tank waste height, camera resolution, lighting, and the experience of the inspector reviewing the tape or watching the monitor. Any indications can only be verified by a subsequent UT examination in the exact area of the indication (if accessible from the annulus). Success of the UT examination depends on the certain capabilities of the UT equipment (e.g., cable length, accessibility). Indications discovered on videos in the dome, for instance, are not generally accessible by the UT equipment and cannot be	Observations Section 9.2.3.1

Table G-1. Summary of Findings and Observations (Bases) From the DSTAR and Supporting Documents. (33 Sheets)

Item	Doc. Number & Title	Conclusion, Finding or Observation	Reference Section & Location
		quantified with current technology. If the tank were empty and an indication was discovered on the tank bottom, that area is not accessible by the UT equipment and cannot be quantified with current technology (see Recommendation 9.2.3.2-1).	
B51	**RPP-28538, Rev. 0** *Double Shell Tank Integrity Assessment Report, HFFACO M-48-14*	TFC policies regarding mandatory procedure compliance is commendable and do contribute to obtaining quality data. However, placing the Field Work Supervisor in charge of obtaining quality, useful videos is a conflict of interest and risks failure. At best it results in a loss in ownership of the inspection. The only way to remedy this situation is to ensure that a single individual is responsible for a quality video and is independent of the labor forces. It is also evident that some individuals directing the video examinations are not aware of areas of interest identified on previous videos. Areas of interest need to be subsequently re-videoed at each inspection interval to determine whether corrosion is progressing (see Recommendation 9.2.3.2-2).	Observations Section 9.2.3.1
B52	**RPP-28538 Rev. 0** *Double Shell Tank Integrity Assessment Report, HFFACO M-48-14*	The person directing the videos has often been qualified as a metallurgist or has been trained in corrosion. Those videos performed without such qualified individuals are apparent in that key features or areas of concern are missed (on the other hand, Observation 9.2.3.1-2 could also be the cause). However, it is acceptable to utilize a graded approach in establishing a group of qualified inspectors, starting with Quality Control inspectors who are at least trained in visual inspection of welds. Over time, the Quality Control inspectors could receive training in basic corrosion from NACE and eventually receive their NACE inspector certifications (see Recommendation 9.2.3.1-3).	Observations Section 9.2.3.1
B53	**RPP-28538, Rev. 0** *Double Shell Tank Integrity Assessment Report, HFFACO M-48-14*	The person writing the video reports has not been qualified to review and report on inspection videos. This has resulted in reports with minimal or inadequate technical discussion of the corrosion or indications otherwise observed by qualified inspectors. The reports are not authoritative and do not provide specific recommendations for further quantitative examination with UT equipment (see Recommendation 9.2.3.2-2).	Observations Section 9.2.3.1
B54	**RPP-28538, Rev. 0** *Double Shell Tank Integrity Assessment Report, HFFACO M-48-14*	Visits to the video archives by the IQRPE revealed that original videos were stored on shelves and little or no access control was provided. Each video represents thousands of dollars worth of data. In fact, because each video is a snapshot in time of an ongoing corrosion process, no video can be replaced through re-performance (see Recommendation 9.2.3.1-6).	Observations Section 9.2.3.1

Table G-1. Summary of Findings and Observations (Bases) From the DSTAR and Supporting Documents. (33 Sheets)

Item	Doc. Number & Title	Conclusion, Finding or Observation	Reference Section & Location
B55	**RPP-28538, Rev. 0** *Double Shell Tank Integrity Assessment Report, HFFACO M-48-14*	According to regulatory requirements (WAC 173 303-640(2)(c)(v)(A) and 173 303-640(2)(c)(v)(B)), leak testing is a preferred method of tank integrity assessment on tanks that are buried and do not have secondary containment. There are no tanks meeting this description that are currently in service in the tank farms (catch tank 241-AZ-301 is double contained). Therefore, leak testing of catch tanks in the tank farms is no longer needed (see Recommendation 9.2.5.2).	Observations Section 9.2.5.1
B56	**RPP-28538, Rev. 0** *Double Shell Tank Integrity Assessment Report, HFFACO M-48-14*	UT inspections typically provide a resolution of ten mils, or 10/1000 in. Thus, at least 10 mils of metal loss must occur to the base metal before the corrosion could be detected with a level of confidence. In fact, on a 0.375-in.-thick plate, thinning is detectable near 10 mils, but is not reportable on that plate until it has experienced a 20% loss, which is about 75 mils. If the corrosion rates were 100 mils/yr, then corrosion would become detectable (but not yet reportable) within just 36 days. If the corrosion rates were 10 mils/yr, then the corrosion processes would have to continue for a full year before they would become detectable. However, the actual corrosion rates, which have been measured within the DST using linear polarization resistance techniques, were found to generally be less than 1 mil/yr. Thus, at the present corrosion rates, it could take over 10 years before corrosion would be detectable, using ultrasonic techniques. This is the justification for the 8- to 10-year periodicity of UT inspections. However, any accelerated corrosion (e.g., liquid-air interface) or slow initiation, rapid progression corrosion (e.g., SCC) might be missed by this approach. This is why in-tank corrosion monitoring instrumentation is needed. The monitoring could detect the onset of corrosion before the cumulative effects of the corrosion processes become detectable by the inspection techniques, or detect rapidly deteriorating conditions in a timely manner. Thus, with in-tank corrosion monitoring, the appropriate remedial actions could be implemented to stop or at least slow down (inhibit) the corrosion processes. A combination of in-tank corrosion monitors that detect uniform corrosion (e.g., electrical resistance and linear polarization resistance probes) along with detection of pitting and cracking (electrochemical noise probe) would protect the DSTs from long-term corrosion thinning and the most likely leak failure mechanism due to corrosion from through-wall pitting. While the UT equipment can detect pitting, 100% of the tank cannot be inspected and reportable pitting could be missed (see Recommendation 9.2.6.5-1).	Observations Section 9.2.6.3

Table G-1. Summary of Findings and Observations (Bases) From the DSTAR and Supporting Documents. (33 Sheets)

Item	Doc. Number & Title	Conclusion, Finding or Observation	Reference Section & Location
B57	**RPP-28538, Rev. 0** *Double Shell Tank Integrity Assessment Report, HFFACO M-48-14*	The 5th generation tank probes presently under design and procurement for limited application, are the key to monitoring corrosion in real time and determining corrosion rates in the Hanford waste tanks. The probes utilize several monitoring methods including corrosion potential, electrochemical noise, electrical resistance, linear polarization resistance, with pre-stressed and neutral electrodes, along with passive coupons. Using the various methods is important because they are complementary. For instance, each electrochemical noise reading is independent from the previous reading. During down times, electrochemical noise provides no indication of the corrosive conditions in the tank. On the other hand, electrical resistance continues to provide a means of assessing the corrosive conditions that occurred once power is restored to the system. Once actual corrosion rates can be measured, it is possible that UT examination frequencies can be fine tuned and probably relaxed for those tanks that employ corrosion probes instrumentation. Or, perhaps, the UT examinations could be refocused to levels of the tank experiencing higher than expected corrosion, or the vapor space and liquid/vapor interfaces, complementing the corrosion probes, which have minimal capability with regard to detecting vapor space corrosion (see Recommendation 9.2.6.5-1). Interviews with TFC engineers indicate that tank waste chemistry has been informally characterized and grouped into seven basic waste types to this extent that it may prove feasible that the installation of only seven probes might provide adequate representative monitoring of the DSTs. However, different temperature and other conditions may require individual monitoring probes for each DST. Nevertheless, it is considered that the corrosion probe program must be completed with probes installed, at a minimum, in all representative waste types.	Observations Section 9.2.6.3
B58	**RPP-28538, Rev. 0** *Double Shell Tank Integrity Assessment Report, HFFACO M-48-14*	Not enough data exists to determine the need for corrosion monitoring in the transfer lines. A representative carbon steel sample is needed for forensic analysis. Ideally, the 241-SY transfer lines will eventually be examined, since they represent a good amount of use and are sufficiently aged to get an idea of their corrosion-erosion performance over the years (see Recommendation 9.2.6.5-2).	Observations Section 9.2.6.3
B59	**RPP-28538, Rev. 0** *Double Shell Tank Integrity Assessment Report, HFFACO M-48-14*	Recent measurements of the general and localized corrosion rates within the waste storage tanks have resulted in the reporting of low corrosion rates (i.e., less than 1 mil/yr [0.001 in./yr]). Ultrasonic inspections of the interior surface of the waste storage tanks have not revealed significant patterns or areas of pitting, and the ultrasonic inspections have not resulted in the detection of networks of SCC. Hence, it is understandable that coupons and the electrical resistance probes, which had been	Observations Section 9.2.6.4

Table G-1. Summary of Findings and Observations (Bases) From the DSTAR and Supporting Documents. (33 Sheets)

Item	Doc. Number & Title	Conclusion, Finding or Observation	Reference Section & Location
		installed within some of the Hanford tanks in earlier testing, did not detect significant corrosion rates. Therefore, it can be deduced that the current method of managing corrosion within the liquid covered surfaces of the tanks by maintaining the chemistry as currently specified (>12 pH) is effective in minimizing tank corrosion.	
B60	**RPP-28538, Rev. 0** *Double Shell Tank Integrity Assessment Report, HFFACO M-48-14*	In order for the DST systems to be fit for use for the duration of their design life and beyond, it is essential for the TFC to maintain the integrity of the waste storage tanks, pits, and transfer piping system until the end of their mission. This requires that the tanks and piping be appropriately monitored for indication of active corrosion. In addition, chemical treatments or other remedial actions should continue to be undertaken to keep the system within specifications. Monitoring should also be used to confirm the effectiveness of any treatments (see Recommendation 9.2.6.5-1).	Observations Section 9.2.6.4
B61	**RPP-28538, Rev. 0** *Double Shell Tank Integrity Assessment Report, HFFACO M-48-14*	Some tanks have exceeded their 20% wall thinning criteria in some areas. Others may have used up nearly all of their corrosion allowance (e.g., tank 241-SY-101 plate #1). Much of the corrosion on the tanks has is most pronounced in the vapor space, and at any long-term liquid-vapor interface. Vapor space corrosion monitoring, or the development of laboratory techniques for accelerated testing, would be beneficial in quantifying the rates at which the vapor space corrosion is occurring, and if any remedial actions are required.	Observations Section 9.2.6.5

Table G-2. Summary of Recommendations From DSTAR and Supporting Documents. (20 Sheets)

Item	Doc. Number	Recommendation Summary	Reference Section & Location
R1	**RPP-18652, Rev. 1** *Buried Pipe Analysis for DST System Integrity Assessment*	Basis for recommendations was concern over shallowness of some pipe burials. It is recommended that the potentially shallow burial depths of some transfer lines mentioned in this document be reviewed and inspected to ensure compliance with applicable safety requirements, but it is not within the scope of this analysis to determine the adequacy of the present soil cover to comply with current shielding requirements. PER-2004-1039 has been written to address the above recommendation.	Recommendations: Main Document
R2	**RPP-18652, Rev. 1** *Buried Pipe Analysis for DST System Integrity Assessment*	***In addition, due to the shallowness of some of the transfer lines mentioned in this document, it is recommended that an analysis or evaluation of frost heave and its effects is in order to determine the corrective action needed. Inspections and/or testing of identified pipes might also be in order, if it is determined that frost heave is a concern and that its damaging effects could have occurred in the past.***	Recommendations: Main Document
R3	**RPP-18652, Rev. 1** *Buried Pipe Analysis for DST System Integrity Assessment*	***PER No. 2004-5678 which was written against this document indicated that the soil cover for SN-631 of Tank Farm AZ should be much greater as indicated by drawing H-14-102671 Sht. 1. The increase in soil cover was credited to a berm. Upon further investigation, the height of the berm was still not conclusive. Berms on other transfer lines, in other tank farms, called out on numerous related drawings are simply stated as "as required." This is not definite enough to be included in this evaluation. Thus, as previously recommended, inspections on suspected shallow transfer lines are in order. This should provide a more accurate assessment of the soil cover above the suspect transfer line.***	Recommendations: Main Document
R4	**RPP-20556, Rev. 0** *DST Assessment of the Dome Load Program for Double Shell Tanks*	The TFC should review and address the observations provided in this document in an effort to improve or clarify the dome load program.	Recommendations: Section 8
R5	**RPP-20556, Rev. 0** *DST Assessment of the Dome Load Program for Double Shell Tanks*	An effort is currently underway to model DST loading. This effort should be carried through to include dome deflection studies such that a basis can be provided for dome deflection survey allowable dome deflections which would then be translated into allowable riser deflections. The effort should also be carried through to determine failure loads for the DSTs, including both uniform and concentrated.	Recommendations: Section 8

Table G-2. Summary of Recommendations From DSTAR and Supporting Documents. (20 Sheets)

Item	Doc. Number	Recommendation Summary	Reference Section & Location
R6	**RPP-20556, Rev. 0** *DST Assessment of the Dome Load Program for Double Shell Tanks*	The calculation procedure, TFC-ENG-DESIGN-C-10, should be revised to clarify which type of dome load calculations may be considered computations. Table 2 of that procedure lists "Dome Loads" as computations or as formal calculations. In general, dome load calculations are complex.	Recommendations: Section 8
R7	**RPP-20556, Rev. 0** *DST Assessment of the Dome Load Program for Double Shell Tanks*	The Tank Farm Contractor should perform periodic self-assessments on the dome load monitoring program to track compliance with the dome load procedures and errors, if any, with the DLL. The fact that responsibility for dome load tracking and monitoring is spread across multiple organizations increases the possibility of non-compliance. It is further recommended that the periodicity of these self-assessments be a minimum of once per year.	Recommendations: Section 8
R8	**RPP-20556, Rev. 0** *DST Assessment of the Dome Load Program for Double Shell Tanks*	The Tank Farm Contractor should consider centralizing dome load and dome deflection responsibility under one engineer. This engineer would track and maintain an independent database of dome deflections, correlated with loads, and serve as a central point of contact (POC) for operations resolution of DLL and DLRSS issues.	Recommendations: Section 8
R9	**RPP-22604, Rev. 0** *IQRPE Evaluation and Documentation of DST Secondary Liner Issues*	Each tank farm has received a varying degree of inspection on the secondary tanks. None have received a hydrostatic leak check (for justifiable reasons). Nonetheless, a primary recommendation of this evaluation is to document the limit on the level of leaked product permitted in the secondary containment on the SY, AY and AZ tanks. These tank farms received the least amount of inspection on the secondary liners. This evaluation must consider reasonable leak scenarios and develop a model for the most likely leak condition. If the estimated leak height is above the respective tank's radiographic inspection level, operational and engineering measures should be taken to limit a leak in those tanks to that height in the secondary tank. This recommendation was resolved per section 4.10.5 of this document (RPP-28538).	Recommendations: Section 7
R10	**RPP-22604, Rev. 0** *IQRPE Evaluation and Documentation of DST Secondary Liner Issues*	TSAFT or equivalent examinations should be made on the secondary liner lower knuckle to provide gross indication of cracking. This recommendation was resolved per section 4.10.5 of this document (RPP-28538).	Recommendations: Section 7

Table G-2. Summary of Recommendations From DSTAR and Supporting Documents. (20 Sheets)

Item	Doc. Number	Recommendation Summary	Reference Section & Location
R11	**RPP-22604, Rev. 0** *IQRPE Evaluation and Documentation of DST Secondary Liner Issues*	Emergency pumping procedures currently estimate that the pumping of a secondary tank will begin on the tenth day from discovery of the leak. According to stated functional requirements for the secondary tanks, pumping needs to be completed on the seventh day. The Tank Farm Contractor needs to perform one of the following actions: Reexamine and streamline the emergency pumping process to remove liquid by the seventh day as required in the design specifications. Perform structural and corrosion analyses or implement real time corrosion monitoring in the annulus with the intent to provide some technical basis for removing waste solutions beyond the seven-day requirement. Ratify the TSIP guidelines and use them to document a basis for a secondary liner design life that is greater than or equal to the time to pump the annulus. A graded approach could also be documented which accounts for the varying liner thicknesses and leak depth. This recommendation was resolved per section 4.10.5 of this document (RPP-28538).	Recommendations: Section 7
R12	**RPP-22604, Rev. 0** *IQRPE Evaluation and Documentation of DST Secondary Liner Issues*	The short design life for the secondary tanks, coupled with the current age of the tanks suggests it is vitally important to ensure operability of the tertiary leak detection pits. The TFC needs to maintain tertiary leak detection capability throughout the life of the tanks.	Recommendations: Section 7
R13	**RPP-22604, Rev. 0** *IQRPE Evaluation and Documentation of DST Secondary Liner Issues*	The secondary liner needs to be analyzed for its ability to contain waste solutions accounting for appropriate design input loads, the fact that the lower knuckle is not supported, and the fact that the liner was not stress relieved. The results of this recommendation may provide input for Recommendation 3. This recommendation was resolved per section 4.10.5 of this document (RPP-28538).	Recommendations: Section 7
R14	**RPP-25153, Rev. 0** *DST Waste Compatibility Assessment Report*	Waste streams sent to the DSTs should continue to be managed using the methodology of RPP-10006 to not create convective and non-convective layers that are required for episodic gas release events as given in PNNL-13337.	Recommendations: Section 6.3
R15	**RPP-25153, Rev. 0** *DST Waste Compatibility Assessment Report*	Any DST piping (especially carbon steel primary piping) and other ancillary equipment that is removed from service for the next several years should be examined for erosion and/or corrosion. The history of the transfers through that piping should be reviewed so that the average corrosion/erosion rate for Hanford DST piping can be determined.	Recommendations: Section 6.3

Table G-2. Summary of Recommendations From DSTAR and Supporting Documents. (20 Sheets)

Item	Doc. Number	Recommendation Summary	Reference Section & Location
R16	**RPP-25153, Rev. 0** *DST Waste Compatibility Assessment Report*	Comparison of historical to current visual inspections should be performed, looking for growth and changes to the corrosion patches and discoloration. Currently, the inspection cycle is to be every five years and the first cycle is essentially complete. Similarly, coordination between the visual and UT examinations should occur to provide quantification for better understanding. The periodic UT examinations of the DSTs are to be performed in the same location at a minimum to determine how fast the tank wall is corroding.	Recommendations: Section 6.3
R17	**RPP-25153, Rev. 0** *DST Waste Compatibility Assessment Report*	UT examination of the DST walls above the waste (i.e., the vapor space) should continue to be performed, if possible, and also coordinated with the visual records.	Recommendations: Section 6.3
R18	**RPP-25153, Rev. 0** *DST Waste Compatibility Assessment Report*	Some sizeable fraction of the threaded fittings of the ancillary equipment should be inspected for leakage, if possible. Any removed ancillary equipment with a threaded fitting should be disassembled for evidence of increased corrosion from radiolysis of the Teflon thread sealant.	Recommendations: Section 6.3
R19	**RPP-25153, Rev. 0** *DST Waste Compatibility Assessment Report*	Review the design lifetime documents for both 241-AZ and 241-AY tank farms and determine why there is a 10-year difference.	Recommendations: Section 6.3
R20	**RPP-25299, Rev. 0** *IQRPE Assessment of Cathodic Protection for Post 2005 DST Pipelines*	**Inspect excavated pipelines and specified abandoned pipelines** If the surface of a pipeline is accessible or is exposed for repairs or alterations, a visual inspection should be used to evaluate the effectiveness of cathodic protection applied to the pipe. Signs of corrosion such as the presence of corrosion products, pitting, cracking, reduction in physical size, or other evidence of deterioration should be noted. Additionally, with the consolidation efforts by WFO to reduce the number of rectifiers needed to support the post-2005 pipelines, an opportunity is presented to inspect lines (not post-2005) which had been protected cathodically protected. The selection of pipes to be inspected should include as many different pipeline configurations (e.g., coatings, covering, insulation, jacketing) as possible, including corrosion conditions surmised as simple to complex, and should include piping from limited to extended years of service. The investigations should be done as soon as possible to observe those pipes no longer receiving cathodic current due to isolated (shutdown) cathodic rectifier systems. IQRPE is aware of several DST pipelines in the 241-SY tank farm that will be replaced by Project E-525. These lines should be evaluated for corrosion data at the time of	Recommendations: Section 12.0

Table G-2. Summary of Recommendations From DSTAR and Supporting Documents. (20 Sheets)

Item	Doc. Number	Recommendation Summary	Reference Section & Location
		replacement. IQRPE considers this empirical methodology to be the most effective and proactive means of determining the effectiveness of the corrosion control program. The investigation should include a person whose professional activities include suitable experience in external corrosion control of buried or submerged metallic piping systems and is either a registered professional engineer, a person recognized as a corrosion specialist or a NACE cathodic protection specialist. A database of evaluations/reports for trending and analysis should be maintained.	
R21	**RPP-25299, Rev. 0** *IQRPE Assessment of Cathodic Protection for Post 2005 DST Pipelines*	**Obtain native potentials at test stations** It is recommended that present-day native potentials be taken at the post-June 2005 test stations. At least four native potential should be taken around the test stations in the effort to establish the most anodic native potential around the test stations. The most anodic native potential can be used to establish conservative NACE Criterion 2 calculations. It is also recommended to access the native potential readings located in the ATPs of the project files.	Recommendations: Section 12.0
R22	**RPP-25299, Rev. 0** *Assessment of Cathodic Protection for Post 2005 DST Pipelines*	**Troubleshoot aberrant readings of last annual survey** It is recommended that re-work and additional work be performed at the following test stations, (i.e., those test stations accessed during the last annual survey from December 2004 to February 2005): • Polarization testing re-work: (78-T2), (82-T12) • Proper configuration verified, and if verified, then polarization re-work: T(41-2), east of 702-AZ • Anode output current measurements for anodes around test station: T(33-45A&B). With respect to the first bullet of Step 5.10.2 of 3-CATH-690, it is recommended to remove this bullet from this Step since the first bullet is impossible to perform. The test station readings cannot be 'ENSURED' to comply with Section 5.9 NACE criterion. As an alternative, a list of native potentials for each test station in 3-CATH-690 should be provided or listed in a referenced document. It is recommended a different step be established to verify whether or not NACE Criterions 2 and 3 is being met.	Recommendations: Section 12.0

Table G-2. Summary of Recommendations From DSTAR and Supporting Documents. (20 Sheets)

Item	Doc. Number	Recommendation Summary	Reference Section & Location
R23	**RPP-25299, Rev. 0** *IQRPE Assessment of Cathodic Protection for Post 2005 DST Pipelines*	**Document, Trend, and Analyze Data from Bimonthly Rectifier Inspection and Annual Polarization Surveys** It is recommended that time-dependent parameters (i.e., rectifier tap settings, rectifier DC output voltages and amperages, test station native potentials, polarization potentials, and cathodic potentials) be inputted into spreadsheets soon after the data is collected and analyzed for trends and abnormalities. It is recommended that the data analysis methods include verifying the 'ON' and 'OFF' measurements of 3-CATH-690 by employing a voltage balance for the following readings: • Voltage between portable reference electrode and first listed pipe in terminal numbers column • Voltage between each applicable permanent reference electrode and the first listed pipe in terminal numbers column • Voltage between portable reference electrode and each applicable permanent reference electrode. Each voltage loop should add to a near zero value. The voltage loop calculation verifies the measurement method and provides high confidence in the readings.	Recommendations: Section 12.0
R24	**RPP-25299, Rev. 0** *IQRPE Assessment of Cathodic Protection for Post 2005 DST Pipelines*	**Clarify need for resistance testing in annual test procedure** Data collection for continuity between individual pipelines, represented by test leads in test stations, should be completed for the remaining test stations whose terminal number rows are unshaded and devoid of terminal numbers. The procedural steps for resistance measurement need to be revisited to make clear the intent of the resistance measurements. Alternatively, an analysis should be made for those test stations (i.e., those test stations without defined terminal numbers in the annual testing procedure) to determine if resistance testing is required.	Recommendations: Section 12.0

Table G-2. Summary of Recommendations From DSTAR and Supporting Documents. (20 Sheets)

Item	Doc. Number	Recommendation Summary	Reference Section & Location
R25	**RPP-25299, Rev. 0** *IQRPE Assessment of Cathodic Protection for Post 2005 DST Pipelines*	**Analyzed 'waterproof' assumptions and methods of jacketed pipelines.** The IQRPE recommends that the TFC obtain industry and/or design documentation asserting that the construction methods and materials for the 26 waterproof post-2005 pipelines (Figures 12 to 17) are adequate to maintain a corrosion-free environment. Despite extensive searching of Hanford documentation, IQRPE was unable to obtain any type of formal or informal documentation that dealt with the issue of whether or not to cathodically protect waterproof piping. IQRPE recommends obtaining physical evidence at selected tests sites confirming the efficacy of the waterproof jacketing.	Recommendations: Section 12.0
R26	**RPP-25299, Rev. 0** *IQRPE Assessment of Cathodic Protection for Post 2005 DST Pipelines*	**Change tap settings on rectifiers serving AN and AP farms** The following recommendations address the high anode outputs in the 241-AP and 241-AN tank farms: • For the 241-AN tank farm – Lower the average anode output to around 0.03 amps/anode • For the 241-AP tank farm – Locate Project B-340 cathodic protection design criterion to verify whether or not the tank farm design criterion matches the Projects B-234 and W-020H design criterion of 0.03 amps/anode – If the anode output limitation of 0.03 amps/anode was not employed for the 241-AP tank farm, then verify the following: ▪ Construction drawings definitively shown the rebar is bonded to the DSTs – If the anode output limitation of 0.03 amps/anode was employed for the tank farm, then adjust the average anode outputs to 0.03 amps ▪ Allow rectifier systems to stabilize for a few weeks and perform the annual polarization testing procedure to measure the lower polarization potentials ▪ Analyze data to judge compliance with NACE Criterions 2 and 3. Changing the tap setting of the rectifier can lower the amperage output from these rectifiers. Each tap setting represents an increase or decrease in voltage and amperage by approximately 5% of the nameplate voltage of the rectifier. System	Recommendations: Section 12.0

Table G-2. Summary of Recommendations From DSTAR and Supporting Documents. (20 Sheets)

Item	Doc. Number	Recommendation Summary	Reference Section & Location
		resistance remains constant right after a tap setting change. Over time the system resistance will reach a steady state at the new voltage. Dropping down to a lower voltage will normally result in a higher amperage steady-state output than the original dropped value because at lower voltages the anodic polarization of the impressed current anodes is less than the anodic polarization at higher voltages. Rectifier R2 nameplate voltage is 100 V (9455666). Each tap setting change is 5 V. To drop 0.165 amps/anode to 0.030 amps/anode requires the voltage to drop from 44.8 V to 0.03 / 0.165 * 44.8 = 8.1 V. This voltage range is achieved at the A-2 or A-3 tap setting of the rectifier. Rectifier R1 nameplate voltage is 100 V (9455666). Each tap setting change is 5 V. To drop 0.182 amps/anode to 0.030 amps/anode requires the voltage to drop from 27.1 V to 0.03 / 0.182 * 27.1 = 4.5 V. This voltage range is achieved at the A-1 or A-2 tap setting of the rectifier. Rectifier 13 nameplate voltage is 40 V (9455666). Each tap setting change is 2 V. To drop 0.045 amps/anode to 0.030 amps/anode requires the voltage to drop from 7.3 V to 0.03 / 0.045 * 7.3 = 4.9 volts. This voltage range is achieved at the A-2 or A-3 tap setting of the rectifier providing the rectifier is operating with three phases. During the annual survey December2004 to February 2005, rectifier 13 was operating as with one phase. In conjunction with the tap setting change, the operation of the rectifier must be repaired to run with three-phase (i.e., the normal operational state).	

Table G-2. Summary of Recommendations From DSTAR and Supporting Documents. (20 Sheets)

Item	Doc. Number	Recommendation Summary	Reference Section & Location
R27	**RPP-25299, Rev. 0** *IQRPE Assessment of Cathodic Protection for Post 2005 DST Pipelines*	**Incorporate design, testing, and operating parameters** 1. In future cathodic protection calculations, it is recommended that steady-state resistance gain, due to anodic polarization at the impressed current anode, be accounted in current or voltage calculations. 2. In future ATPs, it is recommended to perform the test over a month's time span to compensate for increase in system resistance due to polarization at the anodes. 3. In future cathodic protection calculations, it is recommended to conduct resistivity tests for the area of interest, rather than assuming resistivity values. 4. It is recommended to determine if there is any 'non-waterproof-covered', stainless steel piping receiving cathodic current, but at a rate where less than 100 mV of polarization gain is occurring. If such conditions are determined, it is recommended to ensure at least 100 mV of polarization gain is realized on the piping. 5. Unless it is definitely proven that the rebar in the concrete surrounding the DST is bonded to the tank, it is recommended to continue designing future CPSs with an anode amperage output limit of 0.03 amps around and above DSTs. 6. It is recommended to incorporate the testing of each anode output in any future DST cathodic protection ATP.	Recommendations: Section 12.0
R28	**RPP-25299, Rev. 0** *IQRPE Assessment of Cathodic Protection for Post 2005 DST Pipelines*	**Measure and Document Anode Current Outputs** It is recommended to measure the amperage output for each anode with a lead connected to a stud in a DST distribution box. ECN 644214, *Supplemental ECN to Change Drawing to Add Detail 8 and Add Materials List to Drawing and Add Note for Anode Current Box,* shows the anode current measurement box constructed by Fluor Daniel Northwest. The box is located on the Hanford Site in the 200 East Area. This box provides a fast and accurate method of anode current measurement. The box provides the facility to measure the current (i.e., voltage drop across a precision shunt) to 32 anode leads in one setup.	Recommendations: Section 12.0

Table G-2. Summary of Recommendations From DSTAR and Supporting Documents. (20 Sheets)

Item	Doc. Number	Recommendation Summary	Reference Section & Location
R29	**RPP-25299, Rev. 0** *IQRPE Assessment of Cathodic Protection for Post 2005 DST Pipelines*	**Analyze existing coating features of outer tank surrounding AZ-310 catch tank** It is recommended to analyze the coating configuration of the outer tank that envelopes catch tank AZ-301. If tank covering is found questionable to achieve its zero corrosion tolerance design and the tank is judged to require a zero corrosion tolerance, then it is recommended to apply cathodic protection to the tank. From a cursory view, rectifier 41 system would easily accommodate extra anode(s) because the rectifier has a design output of 12 DC amps and the rectifier is presently delivering around 1 amp.	Recommendations: Section 12.0
R30	**RPP-25299, Rev. 0** *IQRPE Assessment of Cathodic Protection for Post 2005 DST Pipelines*	**Analyze pipelines of Figures 1 through 11 for the applicability for receiving new or additional cathodic protection features.** With respect to those post-2005 pipelines of Figures 1 through 11 (i.e., those pipelines without stated 'waterproof' jacketing and without cathodic protection features), the IQRPE recommends an analysis of these piping configurations to determine whether the risk to those pipes not receiving cathodic protection or not receiving at least 100 mV of polarization gain is acceptable. IQRPE does not recommend applying cathodic protection to those raw water post-2005 pipelines (Table 1) that are not located directly above a DST.	Recommendations: Section 12.0
R31	**RPP-25299, Rev. 0** *IQRPE Assessment of Cathodic Protection for Post 2005 DST Pipelines*	**Improve documentation accessibility** It is recommended to implement and/or evaluate the following documentation suggestions: 1. Document cathodic protection test station deliverable sketches as a separate document in RMIS. 2. Document an evaluation regarding the need to document the piping leads terminating on test station studs. Obtain from Project files all ATPs and ATRs that were not readily available to the IQRPE and scan into RMIS.	Recommendations: Section 12.0

Table G-2. Summary of Recommendations From DSTAR and Supporting Documents. (20 Sheets)

Item	Doc. Number	Recommendation Summary	Reference Section & Location
R32	**RPP-25299, Rev. 0** *IQRPE Assessment of Cathodic Protection for Post 2005 DST Pipelines*	**Determine whether inaccessible test stations are Post-2005 test stations** It is recommended to make a list of the test stations marked as 'N/A' on the data sheets of 3-CATH-690 during the last annual survey of December 2004 to February 2005. That list should be compared against Table 2 of this assessment to determine if any of the piping located underneath the test stations is categorized as a post-2005 pipeline. Those 'N/A' test stations which contain leads to post-2005 piping should be investigated for the nature of their inaccessibility. If feasible, the inaccessibility of post-2005 test stations should be remediated.	Recommendations: Section 12.0
R33	**RPP-25299, Rev. 0** *IQRPE Assessment of Cathodic Protection for Post 2005 DST Pipelines*	**Performance of bimonthly rectifier inspections and annual polarization surveys** It is recommended to perform the bi-monthly rectifier survey every two months and to perform the annual polarization survey every year.	Recommendations: Section 12.0
R34	**RPP-27097, Rev. 0** *DST Waste Transfer Line Encasement Integrity Assessment Technology Study*	Perform a detailed cost benefits analysis for performance of a CIPS survey to evaluate the effectiveness of the cathodic protection system. The initial CIPS survey may be performed in addition to, or in lieu of, the annual cathodic protection system survey as required by WAC-173-303-640.	Recommendations: Section 5.4
R35	**RPP-27097, Rev. 0** *DST Waste Transfer Line Encasement Integrity Assessment Technology Study*	Perform a detailed cost benefits analysis for performance of a DCVG survey, following the CIPS survey, for Types I through III CIPS anomalies, to evaluate the integrity of encasement exterior protective coatings.	Recommendations: Section 5.4
R36	**RPP-27097, Rev. 0** *DST Waste Transfer Line Encasement Integrity Assessment Technology Study*	Perform a detailed cost benefits analysis for the selection of a feasible direct inspection technology for future encasement integrity assessments, as required, as a result of CIPS and DCVG survey findings.	Recommendations: Section 5.4
R37	**RPP-27097, Rev. 0** *DST Waste Transfer Line Encasement Integrity Assessment Technology Study*	Perform a detailed cost benefits analysis for consideration for either supplementing or replacing the annual cathodic protection system survey method (traditional pipe-to-soil potential at the test stations) with the CIPS method for all future annual cathodic protection system surveys in an effort to provide a more accurate and complete determination of the cathodic protection system effectiveness.	Recommendations: Section 5.4
R38	**RPP-27097, Rev. 0** *DST Waste Transfer Line Encasement Integrity Assessment Technology Study*	Consider for adoption: Develop and adopt a DST system waste transfer line encasement future integrity assessment inspection schedule for implementation, similar to the example provided in Appendix B.	Recommendations: Section 5.4

Table G-2. Summary of Recommendations From DSTAR and Supporting Documents. (20 Sheets)

Item	Doc. Number	Recommendation Summary	Reference Section & Location
R39	**RPP-27097, Rev. 0** *DST Waste Transfer Line Encasement Integrity Assessment Technology Study*	Consider for adoption: Continue to investigate and assess advancements in long-range UT, specifically EMW technologies. Future development of these and other technologies may provide a more viable method of direct inspection for application to future encasement integrity assessments.	Recommendations: Section 5.4
R40	**RPP-27097, Rev. 0** *DST Waste Transfer Line Encasement Integrity Assessment Technology Study*	Consider for adoption: Performance of a detailed laboratory examination of any DST system waste transfer line encasements that are removed permanently from service for coating defects, and internal and external corrosion.	Recommendations: Section 5.4
R41	**RPP-27097, Rev. 0** *DST Waste Transfer Line Encasement Integrity Assessment Technology Study*	Consider for adoption: Ensure that all heat-traced encasements within the scope of this document are connected to a properly functioning cathodic protection system. Consideration for either supplementing or replacing the annual cathodic protection system survey method (traditional pipe-to-soil potential at the test stations) with the CIPS method for all future annual cathodic protection system surveys.	Recommendations: Section 5.4
R42	**RPP-27591, Rev. 0** *DST System Pipeline Integrity Assessment*	Flush all DST system waste transfer lines following waste transfer with hot inhibited water (see TFC-ENG-STD-26 for inhibited flush water composition and temperature). Any non-process transfers should also be performed using inhibited water.	Recommendations: Section 5.4
R43	**RPP-27591, Rev. 0** *DST System Pipeline Integrity Assessment*	2. This document, in conjunction with e-mail Anantatmula 2005-09-16 and internal memo 7G110-05-003 (both included in Appendix E), finds that the following actions are necessary to reduce the possibility of continued corrosion in 241-AW tank farm slurry line SL-167: • Evaluate the use of a biocide to the exposed portions of the line encasement and exterior surface of the 2-in. primary pipe and 1-in. pipes at cleanout box 241-AW-COB-6 as soon as possible. • Evaluate the performance of an inhibited water flush of the line to fill the low spot with inhibited water. An inhibited water flush should also follow any transfers in this line as recommended in paragraph 5.4.3(3) above. • Evaluate the using an inhibited water flush of the line for all verification activities that introduce water into the line or its encasement.	Recommendations: Section 5.4
R44	**RPP-27591, Rev. 0** *DST System Pipeline Integrity Assessment*	Based on the lack of evidence of the effective operation of the DST system pipeline cathodic protection system specific to any individual line, and the inability to verify the integrity of exterior protective coatings or insulation once buried in the earth, it is recommended that 5% of the buried carbon steel DST system waste transfer line (slurry, supernate, process waste) encasements, and raw water and flush lines listed	Recommendations: Section 5.4.7

Table G-2. Summary of Recommendations From DSTAR and Supporting Documents. (20 Sheets)

Item	Doc. Number	Recommendation Summary	Reference Section & Location
		in Appendix A should be inspected for evidence of corrosion five years following this integrity assessment and every five years thereafter, based on the recommended frequency presented in ANSI B31.1, Appendix V, paragraph V-7.5. At a minimum, two sprayed polyurethane insulated lines and two un-insulated lines with exterior protective coatings should be inspected. Examination for evidence of corrosion should be made by UT. The examinations should focus specifically on pipeline low points and, if possible, areas of the pipe where it is known that field welds were made (e.g., where bends were joined to straight lengths of pipe). The inspection should obtain data points for pipe wall thickness for use in conjunction with a history of transfer duration and frequency through the pipeline for establishment of a representative corrosion rate. The inspection should also examine the exterior protective coatings and insulation for defects and any evidence of water infiltration. The coating or insulation shall be removed nominally 12 in. from either side of the selected inspection point or coating/insulation defect location to expose the pipe for examination. Following the examination, the coating or insulation shall be repaired/replaced in accordance with the original construction specification. A formal report of findings, whether significant or not, should be documented. That report should include any recommendations for future DST system pipeline integrity assessments seen necessary as a result of the inspection results. This recommendation may be waived, if within five years, buried carbon steel DST pipelines are inspected or examined as a result of recommendation 9 herein.	
R45	**RPP-27591, Rev. 0** *DST System Pipeline Integrity Assessment*	A formal integrity assessment should be performed on all DST system waste transfer, drain, and process waste lines eight years after the issuance of this integrity assessment.	Recommendations: Section 5.4.7
R46	**RPP-27591, Rev. 0** *DST System Pipeline Integrity Assessment*	There is no indication via either the documented video inspections, pneumatic encasement leak test results, observed material loss and resulting corrosion rate for line SL-167 or ERUL calculation results that provides evidence that the encasements are susceptible to failure due to a common failure mechanism. Thus, these systems do not warrant periodic encasement leak testing, other than testing as required in the future DST system pipeline integrity assessment recommended above, or as required for deferred use, emergency use only, or approved variance pipelines within one year or prior to use.	Recommendations: Section 5.4.7

Table G-2. Summary of Recommendations From DSTAR and Supporting Documents. (20 Sheets)

Item	Doc. Number	Recommendation Summary	Reference Section & Location
R47	**RPP-27591, Rev. 0** *DST System Pipeline Integrity Assessment*	A formal ERUL calculation should be performed to assess the structural impact of corrosion/erosion on the DST system pipelines. Although video inspections, pneumatic encasement leak testing, operational and failure history, and ERUL calculations seem to indicate that relatively few, if any, waste transfer lines would fail during the 2028 mission, formal testing to establish a valid corrosion rate is necessary to assure this conclusion. That analysis should incorporate data resulting from tests performed to establish a relevant corrosion/erosion allowance and/or rate for DST waste simulant flowing through ASTM A53 or ASTM A106 carbon steel pipe at maximum velocities expected during DST system waste transfers, or 10 ft/sec, whichever is greater. The time basis for the rate should be associated with a maximum estimated transfer frequency and duration for the DST system waste transfer pipelines.	Recommendations: Section 5.4.8
R48	**RPP-27591, Rev. 0** *DST System Pipeline Integrity Assessment*	An ECN should be written to update the hose information table on H-14-103596 (via ECN-720301-R0) to reflect the June 1, 2006 HOSE-SY101-PPP/SYA expiration date.	Recommendations: Section 5.4.8
R49	**RPP-27591, Rev. 0** *DST System Pipeline Integrity Assessment*	Any statistically representative samples of DST pipelines removed from service (via failure, end of life, etc.) should be unearthed and examined in a laboratory for corrosion/erosion, and failure mode as necessary. Examination for evidence of corrosion should be made by UT. The examinations should focus specifically on pipeline low points and if possible areas of the pipe where it is known that field welds were made (e.g., where bends were joined to straight lengths of pipe). The inspection should obtain data points for pipe wall thickness for use in conjunction with a history of transfer duration and frequency through the pipeline for establishment of a representative corrosion rate. The inspection should also examine the exterior protective coatings and insulation for defects and any evidence of water infiltration.	Recommendations: Section 5.4.8
R50	**RPP-28538, Rev. 0** *Double Shell Tank Integrity Assessment Report, HFFACO M-48-14*	While failure of the refractory concrete in the DSTs has been analyzed (RPP-19097) and determined to not result in catastrophic failure of the primary tank, it should not be considered a non-issue. The introduction of plastic deformations in the primary tank, from such a postulated refractory cement failure, will change the stress condition of the tank. This may result in a change in the allowable loads. It is therefore considered necessary to include inspection of the refractory concrete for degradation in all annulus videos. In the event of a tank leak, exposure of the refractory concrete to tank waste should be considered a	Recommendations: Section 4.14.1

Table G-2. Summary of Recommendations From DSTAR and Supporting Documents. (20 Sheets)

Item	Doc. Number	Recommendation Summary	Reference Section & Location
		serious condition and the time of exposure should be minimized unless laboratory analysis can be performed that would determine otherwise.	
R51	**RPP-28538, Rev. 0** *Double Shell Tank Integrity Assessment Report, HFFACO M-48-14*	UT examinations should continue on the current frequency and schedule.	Recommendations: Section 4.14.2
R52	**RPP-28538, Rev. 0** *Double Shell Tank Integrity Assessment Report, HFFACO M-48-14*	An up to 20-ft section of the secondary tank lower knuckle (depending on interferences and concrete splatter) on each of the 241-AY farm tanks should be included in the normal UT examination schedule. These lower knuckles are the thinner of all the tanks secondary liners and are not structurally supported on the underside.	Recommendations: Section 4.14.3
R53	**RPP-28538, Rev. 0** *Double Shell Tank Integrity Assessment Report, HFFACO M-48-14*	A 20-ft section of the primary tank plate #1 on tank 241-SY-101 should be included in the normal UT examination schedule. The TFC should also consider a near full circumference UT examination of the plate #1.	Recommendations: Section 4.14.4
R54	**RPP-28538, Rev. 0** *Double Shell Tank Integrity Assessment Report, HFFACO M-48-14*	A workshop of experts should be held to determine a path-forward on vapor space corrosion for the Hanford DSTs. The workshop should: • Explore the need to quantify corrosion in the vapor space (e.g., determine the need to obtain UT measurements of the dome wall thickness) and the technology needed to obtain the measurements • Review the consequences of through-wall pitting in the tank dome • Propose techniques for mitigation of vapor space corrosion and recommend methods for implementation and use, if required Evaluate and explore techniques for accelerated laboratory corrosion testing of vapor space conditions.	Recommendations: Section 4.14.5
R55	**RPP-28538, Rev. 0** *Double Shell Tank Integrity Assessment Report, HFFACO M-48-14*	The DSTs (tanks only) should be assessed for integrity by an IQRPE in 10 years (the year 2016). This assessment should take into account the next round of UT examinations and two additional rounds of video examinations based on the schedules recommended in this document. Assessment frequencies for DST components (e.g., ancillary equipment) are provided in the appropriate sections of this document.	Recommendations: Section 4.14.6
R56	**RPP-28538, Rev. 0** *Double Shell Tank Integrity Assessment Report, HFFACO M-48-14*	The acceptable wall thinning for UT examinations needs to be based on the corrosion allowance of 0.060 in. afforded to the tanks by the DST structural analyses, or on the established minimum wall determinations from the PNNL	Recommendations: Section 4.14.7

Table G-2. Summary of Recommendations From DSTAR and Supporting Documents. (20 Sheets)

Item	Doc. Number	Recommendation Summary	Reference Section & Location
		analyses due this year. Also, a more consistent method (e.g., statistical analysis of UT data) for determining both average minimum and average overall plate thicknesses should be instituted for UT data showing a pattern of notable thickness reductions.	
R57	**RPP-28538, Rev. 0** *Double Shell Tank Integrity Assessment Report, HFFACO M-48-14*	An evaluation of the tank 241-SY-101 overall and localized plate thinning (see Recommendation 4.14.7) needs to be performed that identifies life-extension measures, if necessary, to ensure that tank 241-SY-101 can complete its mission before its plate #1 corrosion allowance is depleted. This may include consideration of previous events that may have accelerated the corrosion, verification that the corrosion rate has reduced, a plan for removing the tank from service, or the results of a minimum wall thickness structural analysis. The inspection report (RPP-18444) is clear that no pitting indications were found, which means that at least localized general corrosion is the primary concern on this plate course. It is expected that a near full circumference UT examination is needed on the plate #1 course to determine the extent to which the corrosion allowance has been consumed, and to accurately assess the overall average plate thickness. According to the minimum measured thickness of 0.306 in. (found in RPP-18444); the corrosion allowance has been exceeded in some areas.	Recommendations: Section 4.14.8
R58	**RPP-28538, Rev. 0** *Double Shell Tank Integrity Assessment Report, HFFACO M-48-14*	RPP-8212 should be revised to reflect a comprehensive plan for the acquisition, review, and retention of video examination data. The plan should include a process for determining the locations of interest identified in previous videos, re-examination of those areas in future videos, acceptance criteria or standards, and integration of the areas of interest with the UT examination program. It should also require cross-comparison with prior results, and close up visual examination and/or UT inspection of questionable areas.	Recommendations: Section 4.14.9
R59	**RPP-28538, Rev. 0** *Double Shell Tank Integrity Assessment Report, HFFACO M-48-14*	Tank settlement surveys recently performed indicate that there is no significant evidence of tank settlement. It is recommended that the next surveys be performed in 8 to 10 years to coincide with the next DST System Integrity Assessment.	Recommendations: Section 4.14.10
R60	**RPP-28538, Rev. 0** *Double Shell Tank Integrity Assessment Report, HFFACO M-48-14*	Primary tank inspection videos for tanks 241-AZ-101 and 241-AZ-102, and annulus videos for AW-101 should be obtained within a period of 6 months and reviewed by the IQRPE and an independent certified tank inspector selected by the IQRPE. This report should then be revised to include the results if the AZ-102 and AW-101 annulus video inspections. The 241-AZ-101 video was of poor quality and the AZ-102 and AW-101 videos were not available.	Recommendations: Section 4.14.11

Table G-2. Summary of Recommendations From DSTAR and Supporting Documents. (20 Sheets)

Item	Doc. Number	Recommendation Summary	Reference Section & Location
R61	**RPP-28538, Rev. 0** *Double Shell Tank Integrity Assessment Report, HFFACO M-48-14*	1. Pits must be cleaned and have their coatings re-inspected by a qualified NACE coating inspector at the following periodicities with the start date based on those provided in Table 6-6 for the pits, and November 2005 for the 6241 vaults. • Pits/vaults with polyurea coatings: every 10 to 12 years. • Pits with epoxy paint coatings: every 5 to 7 years or after every two jumper installation or disconnect activities, whichever is shorter. • Vaults with epoxy paint coatings: every 10 to 12 years. • Pits/vaults with stainless steel liners: every 12 to 15 years. Even though this recommendation calls for a qualified NACE coating inspector, it is understood that the radiological condition of the pits may preclude a full inspection per NACE specifications. The qualified NACE coating inspector should be included in the planning phases of the inspection to employ due diligence in the execution of the inspection, while maintaining ALARA (as low as reasonably achievable) principles.	Recommendations: Section 6.11.2
R62	**RPP-28538, Rev. 0** *Double Shell Tank Integrity Assessment Report, HFFACO M-48-14*	Pits with epoxy paint coatings should not be allowed to have old jumpers stored on the floor of the pit. The use of flex jumpers in these pits should be avoided where possible, if the braided hose contacts the pit floor or wall. Contact between the jumper and the coating could damage the coating. In fact, storing or disposing of jumpers by leaving them on the bottom of the pits threatens the leak integrity of the pits. **Table in Recommendation is not included for brevity (See RPP-28538 Rev. 0)**	Recommendations: Section 6.11.2
R63	**RPP-28538, Rev. 0** *Double Shell Tank Integrity Assessment Report, HFFACO M-48-14*	Structural evaluations for the SY and AP pits could not be located. Structural evaluations for these pits should be performed or obtained within 6 months and reviewed by the IQRPE. This report should then be revised to include the results of those evaluations.	Recommendations: Section 6.11.2
R64	**RPP-28538, Rev. 0** *Double Shell Tank Integrity Assessment Report, HFFACO M-48-14*	This tank should be assessed again by an IQRPE in 10 years (the year 2016). The assessment should include physical inspection and UT examination of both the primary and secondary tank.	Recommendations: Section 7.12.1
R65	**RPP-28538, Rev. 0** *Double Shell Tank Integrity Assessment Report, HFFACO M-48-14*	If actual plate thickness measurements were obtained during construction, those values should be captured and retained by the DST Integrity Project before project files are archived. These measurements will be needed as a baseline for the next	Recommendations: Section 7.12.2

Table G-2. Summary of Recommendations From DSTAR and Supporting Documents. (20 Sheets)

Item	Doc. Number	Recommendation Summary	Reference Section & Location
		integrity assessment.	
R66	**RPP-28538, Rev. 0** *Double Shell Tank Integrity Assessment Report, HFFACO M-48-14*	It is recommended that the vision of PNNL-15415 be carried to completeness. Specifically, as UT scans progress, different quadrants of the tank should be examined to support the findings of the analysis. Once an examination has been performed at each quadrant of each tank – or until the analysis is satisfied – rotation of quadrant examinations should continue to further ensure that not just a small area of the tank is examined over and over again. This will make it difficult to obtain corrosion rate data from the UT examinations (because different areas are examined). The present TFC program to double the UT area by doing a UT from the same riser as previously done, and another set from a second riser, may be an appropriate compromise with riser rotation. However, UT examinations are not considered to be an adequate means of monitoring both low corrosion rates and rapid onset events (e.g., SCC), and need to be augmented by in-tank corrosion monitors, as will be discussed in Section 9.2.6.3. However, UT examinations are still needed to quantify the general condition of the tank wall.	Recommendations: Section 9.2.1.4
R67	**RPP-28538, Rev. 0** *Double Shell Tank Integrity Assessment Report, HFFACO M-48-14*	Due to the crack measurement limitations of the TSAFT data, it is recommended that the TFC develop a response plan, approved by the facility owner (U.S. Department of Energy, Office of River Protection) and the acting IQRPE that describes a credible response to the possibility of a TSAFT crack indication in the area of maximum stress in the knuckle (e.g., increased UT surveillance). The plan will need to determine the limits of capability of the TSAFT device and whether further development will allow it to quantify cracks of sizes less than 0.050 in. The plan will also need to rely heavily on leak detection indications and video examinations in the area of the identified crack.	Recommendations: Section 9.2.2.3
R68	**RPP-28538, Rev. 0** *Double Shell Tank Integrity Assessment Report, HFFACO M-48-14*	In light of the findings in RPP-RPT-28968, further evaluation should be performed to determine the need for further TSAFT examinations. The evaluation should include consideration and benefits of all data that can be obtained from the TSAFT device other than crack detection and sizing.	Recommendations: Section 9.2.2.3
R69	**RPP-28538, Rev. 0** *Double Shell Tank Integrity Assessment Report, HFFACO M-48-14*	Technology exists that allows the use of three-dimensional camera deployment on the end of an articulated arm. This technology, if used, would best simulate the performance of a tank inspection on a human-enterable tank. Use of this technology may also avoid unnecessary deployments of UT equipment. In some cases, indications found by two-dimensional video that result in supplemental deployment of UT equipment, may be easily resolved with three-dimensional	Recommendations: Section 9.2.3.2

Table G-2. Summary of Recommendations From DSTAR and Supporting Documents. (20 Sheets)

Item	Doc. Number	Recommendation Summary	Reference Section & Location
		video, precluding the need for a corresponding UT examination.	
R70	**RPP-28538, Rev. 0** *Double Shell Tank Integrity Assessment Report, HFFACO M-48-14*	Procedures, whether explicitly followed or not, are not ensuring the acquisition of quality video data. Further, it is clear that blindly following procedures will not necessarily result in the consistent acquisition of quality video data. A video inspection program, integrated with the UT inspection program, is needed to ensure quality video data is obtained and reported. The program should consist of inspectors belonging to a non-operations or DST Integrity Project organization, qualified to visual inspection standards and trained in the identification of the various common types of corrosion. A qualified engineer, metallurgist, or scientist should be dedicated to the UT and video inspection programs to provide general direction, reporting, and integration of the inspection activities to the end that meaningful data is obtained and utilized.	Recommendations: Section 9.2.3.2
R71	**RPP-28538, Rev. 0** *Double Shell Tank Integrity Assessment Report, HFFACO M-48-14*	Inspectors tending to the video inspections should have already viewed previous videos for areas of interest that need to be revisited. Tracking specific areas of corrosion in subsequent inspections will provide an indication of how the corrosion is progressing.	Recommendations: Section 9.2.3.2
R72	**RPP-28538, Rev. 0** *Double Shell Tank Integrity Assessment Report, HFFACO M-48-14*	Videos need to precede UT examinations. This will allow UT examinations to be targeted at areas of interest without the monetary and schedule expense of supplemental re-deployment of UT equipment.	Recommendations: Section 9.2.3.2
R73	**RPP-28538, Rev. 0** *Double Shell Tank Integrity Assessment Report, HFFACO M-48-14*	The video examinations are not code inspections. It is not possible to visually inspect the DSTs to any consensus engineering code or standard, nor is such a code or standard required. However if the video examination director does not have an applicable engineering degree, he/she is required to have some experience with or qualification in some visual inspection standard. Non-engineer video examination directors should also be trained in the construction of the tanks and have some awareness of tank pre-commissioned condition as well as a general understanding of corrosion. This ensures that the video examination director has an understanding of the need to obtain the best image possible and which visual indications may be worthy of capturing additional detail by zooming, panning, or tilting. A qualified engineer with knowledge or training in corrosion and tank construction could fulfill the role of the video examination director.	Recommendations: Section 9.2.3.2
R74	**RPP-28538, Rev. 0** *Double Shell Tank Integrity Assessment*	The original videos themselves represent invaluable data sets that must be archived, protected from degradation, and properly access controlled. A program for	Recommendations: Section 9.2.3.2

Table G-2. Summary of Recommendations From DSTAR and Supporting Documents. (20 Sheets)

Item	Doc. Number	Recommendation Summary	Reference Section & Location
	Report, HFFACO M-48-14	archiving the video data per appropriate quality assurance standards is necessary to ensure their availability for future integrity examinations and assessments. At a minimum, the videos need to be kept in fire-proof cabinets in an area with fire sprinklers, and under controlled access. It is also recommended that back-up DVDs, using the new archival quality discs (300-year guaranteed life) be made for each of the inspections and stored in a separate location.	
R75	**RPP-28538, Rev. 0** *Double Shell Tank Integrity Assessment Report, HFFACO M-48-14*	There is little benefit from performing annual leak tests on catch tank 241-AZ-301 because it is double contained and provided with leak detection. It is therefore recommended that catch tank 241-AZ-301 not receive annual leak testing.	Recommendations: Section 9.2.5.2
R76	**RPP-28538, Rev. 0** *Double Shell Tank Integrity Assessment Report, HFFACO M-48-14*	Current plans to build and install the fifth generation probes are one of the keys to rounding out the DST corrosion-monitoring program. These probes need to be designed, installed, and tested as soon as possible. Obtaining baseline data is of highest priority once testing is complete. The probes should be configured to include monitoring of vapor space corrosion in addition to the liquid and condensed solids regions of the waste. It is recommended that a program and funding be provided for immediate deployment of corrosion probes in each waste type representative DST at a minimum. This recommendation also includes the retention of the knowledgeable probe development engineer until such time as the system is fine-tuned for non-expert operation and analysis.	Recommendations: Section 9.2.6.5
R77	**RPP-28538, Rev. 0** *Double Shell Tank Integrity Assessment Report, HFFACO M-48-14*	Document RPP-27591 provides further recommendations regarding corrosion monitoring and control on buried waste transfer lines. These are summarized in the tables of Appendix G.	Recommendations: Section 9.2.6.5

APPENDIX H

COMPLIANCE MATRIX

Table H-1. HFFACO M-48-14 DSTAR Compliance Matrix. (6 Sheets)

Item	M-48-14 Reference	Description	DSTAR Reference
1	Paragraph 1	Submit a written integrity assessment report for the Double Shell Tank System to Ecology documenting the following: An assessment of the integrity of the Double Shell Tank System.	RPP-28538, RPP-25153, RPP-25299, RPP-27097, RPP-27591. Section 2.1 of RPP-28538 states that 204-AR will not be assessed and provides justification. Section 6 assesses the only remaining facility resembling a "lift station," which is 6241-V. The 244-A "lift station" was removed from the post 2005 DST System.
2	Paragraph 2, Sentence 3	This Integrity Assessment Report shall include information and data sufficient to determine that the Double-Shell Tank System is fit-for-use, and will not collapse, rupture, or fail, under normal operating conditions.	RPP-28538 and all references per Section 11 and referenced documents within those references.
3	Paragraph 2, Sentence 4	This report shall be accompanied by schedule and recommendations for future integrity assessments sufficient to ensure the system will not collapse, rupture, or fail, under normal operating conditions.	RPP-28538 sections 4.14, 4.15, 6.10.2, 7.11.1, 9.2.5, 10.0.
4	Paragraph a	This integrity assessment report shall document at a minimum, all information gathered for the Double-Shell Tank System to meet the requirements of 40 CFR, Subpart J, Part 265.191 (1) Design Standards: A thorough description of the materials used in construction, construction methods employed, quality control and testing performed on materials, and the final structure, prior to being placed in service, all engineering codes referenced for construction, design operating specifications, and a presentation of all calculations employed to determine each structure's design strength and useful life. An evaluation of the design life of each DST shall be described, based on all ultrasonic data gathered, waste compatibility with the materials of construction, history of sources of tank integrity assessment information gathered, as required in milestone M-48-03, for each tank. This report shall include, at a minimum, a tabular listing by component equipment number of all transfer pipelines within the DST system, describing the materials of construction, and compliance with secondary containment requirements.	In RPP-28538, a review of the table of contents will reveal that this paragraph was used as a guide for structuring the assessment of each component subset. Where sufficient data was available, an attempt at calculating ERUL was made. The tabular listing of component and material exists for the DSTs in Section 4, Table 4-1 and Table 4-5. For the pits and vaults, the applicable tables are 6-2 and 6-3 and Table 2-4 of RPP-25153. For the catch tank, Section 7.1 provides material data. For the transfer lines, material data is provided in Appendix A of RPP-27591. All applicable DST systems are in compliance with secondary containment requirements. While some transfer lines do not have secondary containment – or containment that extends through the pit wall - those lines are *administratively* compliant since each is associated with a compliance variance letter from Ecology.

Table H-1. HFFACO M-48-14 DSTAR Compliance Matrix. (6 Sheets)

Item	M-48-14 Reference	Description	DSTAR Reference
5	Paragraph b	This integrity assessment report shall document at a minimum, all information gathered for the Double-Shell Tank System to meet the requirements of 40 CFR, Subpart J, Part 265.191 (2) Hazardous characteristics of the wastes that have been, or will be handled: A thorough presentation describing the compatibility of the waste stored in each tank with the tank structure and materials. This presentation shall include the following at a minimum: Waste chemical characteristics and properties such as corrosivity, temperature, homogeneity, organic content, specific gravity, gas retention & generation, flammability, and a comparison between the waste currently stored and/or proposed to be stored, in each tank to the design operating specifications for each tank.	Document RPP-25153 presents the Waste Compatibility Assessment Report for the DST system. It specifically addresses this section of the milestone in Section 3.0.
6	Paragraph c	This integrity assessment report shall document at a minimum, all information gathered for the Double-Shell Tank System to meet the requirements of 40CFR, Subpart J, Part 265.191 (3) Existing corrosion protection measures: A thorough description and history of all corrosion protection measures employed for all transfer systems (i.e., caustic flushes), and within each DST since completion of construction. This history shall include a description of all sampling and analysis performed to monitor the status of corrosion inhibitor adjustments to the chemical composition of the waste within each DST, or transferred through DST system transfer lines.	Corrosion protection measures (CPM's) used in the DSTs are: Caustic additions (corrosion inhibitor adjustments) and corrosion allowance. These are described in RPP-25153 and RPP-28538. CPM's used in the transfer system are: cathodic protection, caustic (corrosion inhibitor) flushes, corrosion allowance, and external protective coatings. These are described in RPP-25153, RPP-25299, RPP-28538, and RPP-27951. Sampling and analyses used within the DSTs are: UT examination, grab samples, and core samples. These are described in RPP-25153 and RPP-28538. Sampling and analyses used in the transfer systems are: forensic examination, internal examination, and UT examination. These are described in RPP-25153, RPP-28538, and RPP-27591. Histories of caustic additions were compiled for both out-of-specification adjustments and predictive adjustments. These are provided in RPP-25153 and report all data available at the time of the assessment. Adequate amounts of data were obtained to perform a proper fitness-for-use assessment of the DST System.

Table H-1. HFFACO M-48-14 DSTAR Compliance Matrix. (6 Sheets)

Item	M-48-14 Reference	Description	DSTAR Reference
7	Paragraph d	This integrity assessment report shall document at a minimum, all information gathered for the Double-Shell Tank System to meet the requirements of 40 CFR, Subpart J, Part 265.191 (4) – Documented age of the tank system: The age of each active component of the DST system, including the DST's and their ancillary equipment, as described in milestone M-48-01, shall be described including the completed construction date, the date placed in service, and date each first received waste.	RPP-27591 lists each components service date based on completion of construction. RPP-28538 lists each tank's, and thereby each original pit's service date based on completion of construction (Table 4-7). Additional dates are provided for each pit based on recent upgrades (Table 6-6). Table 6-5 of RPP-28538 lists the dates and ages of the newer pits. Section 7.1 provides the age (and thereby service/construction date) of the AZ-301 catch tank. The dates for "placed into service" and "first received waste" were not used as these are considered protective and not of value to the assessment. Corrosion initiates the moment a component is fabricated. The introduction of caustic waste into that component has been found to immediately inhibit corrosion. Therefore to provide a conservative assessment, only the construction completion dates were used.
Paragraph e: This integrity assessment report shall document at a minimum, all information gathered for the Double-Shell Tank System to meet the requirements of 40 CFR, Subpart J, Part 265.191 (5) – Results of a leak test, internal inspection, or other tank integrity examination for each tank, shall include the following: 40 CFR 265.191(5)(i) [***IQRPE Clarification Note:*** *this regulation does not require a leak test of the DSTs. Leak testing OR internal inspection OR other tank integrity examination is the interpretation of the regulation. Internal inspections AND other integrity examinations, such as UT, were performed to satisfy this requirement.]*			
8	Paragraph e (1)	40 CFR 265.191(5)(i)(1). Examination of a 20-foot long circumferential scan of six (6) DST's at a location in the vertical portion of the primary tank wall corresponding to a static liquid/vapor interface level that existed at any given DST. This static liquid/vapor interface is defined as the average static waste level within a DST for the longest period of time beyond a minimum of five (5) years. This examination shall be fifteen (15) inches wide, centered on the average height of the liquid, for the above described period.	Tanks AN-103, AN-104, AP-105, AW-101, AW-104, AY-101, and SY-101 received circumferential scans at the liquid/vapor interface, fifteen (15) inches wide and centered on the average height of the liquid for the described period.
9	Paragraph e (2)	40 CFR 265.191(5)(i)(2). Examination of a 20-foot long circumferential scan of the predicted maximum stress region of the lower knuckle base metal of six (6) DST's.	Tanks AN-103, AN-104, AP-101, AW-103, SY-101, and AZ-102 received TSAFT scans along the predicted maximum stress region of the lower knuckle.

Table H-1. HFFACO M-48-14 DSTAR Compliance Matrix. (6 Sheets)

Item	M-48-14 Reference	Description	DSTAR Reference
10	Paragraph e (3)	40 CFR 265.191(5)(i)(3). Examination of tank bottoms through accessible air slots of six (6) DST's. This examination shall include all areas accessible within the limits of best available equipment. This examination shall extend at least to (10) feet toward the center of the tank from the lower knuckle joint, or to the length practicable within the limits of best available equipment.	Tanks AN-107, and AW-101 received examinations of tank bottoms through air slots. The task was not completed when it was discovered that the equipment was causing damage to the insulating concrete.
11	Paragraph e (4)	40 CFR 265.191(5)(i)(4). Data gathered from all ultrasonic examinations of all DSTs shall be compared to the corresponding areas of all DSTs examined to determine the range of material thinning among the DSTs examined.	Corresponding data is summarized in each inspection report and a general summary table is provided in RPP-28538, Table 4-7, which reports "average" wall "thinning."
12	Paragraph e (5)	40 CFR 265.191(5)(i)(5). Data gathered from all ultrasonic testing examination required within milestone M-48-03 shall include a review and interpretation by a technical expert qualified, trained and experienced in interpreting ultrasonic data as a Non-destructive Examination (NDE) Level III Inspector.	An ASNT Level III inspector reviews and interprets all UT data.
13	Paragraph e (6)	40 CFR 265.191(5)(i)(6). The Integrity Assessment Report shall include results from examinations of the tank systems listed in milestone M-48-03 and M-48-04.	Table 4-10 of RPP-28538 lists the general results for the UT examinations recently completed for all DSTs.
14	Paragraph e (7)	40 CFR 265.191(5)(i)(7). All results from examinations, not subject to the specific requirements of this Milestone, of failed equipment removed from each DST, corrosion probes existing in each tank, results of testing on simulated tank structures, or materials, and studies of the effects of waste stored within each tank on the tanks materials of construction shall be incorporated in the assessment for reach DST examined. All corrosion studies of any transfer pipelines described under M-48-01 shall be included in this Integrity Assessment Report. This Integrity Assessment Report shall include a schedule for continuing integrity assessment s of DST transfer system components sufficient to ensure they will not collapse, rupture or rail under normal operating conditions.	There have been no failed DSTs. However there have been several failed transfer lines, which are listed in RPP-27591, Section 4.6. Some of these listings are duplicated in RPP-28538, Appendix F, Section 8.4. RPP-28538, Table 9-2 provides a chronology of corrosion probe development, which discusses problems and solutions.

Table H-1. HFFACO M-48-14 DSTAR Compliance Matrix. (6 Sheets)

Item	M-48-14 Reference	Description	DSTAR Reference
15	Paragraph e (8)	40 CFR 265.191(5)(i)(8). Leak and/or pressure testing regimen and specifications of all transfer systems described under M-48-01.	RPP-17266 set forth a plan for encasement pressure testing applicable transfer piping in Section 4.1 Task 4B. RPP-27591 Section 5.4.7 item 5 states further encasement leak testing is not warranted (in light of other recommendations for buried pipeline integrity assessment).
16	Paragraph e (9)	40 CFR 265.191(5)(i)(9). A summary, in tabular form or otherwise, of the observations and conclusions from all visual examinations by direct observation or remote cameral surveillance, taken within the annuli of each DST. This summary shall include observations and conclusions from all visual examinations by direct observation or remote camera surveillance, taken within DST system ancillary equipment (i.e., valve pits, pump pits, double-contained receiver tanks, catch tanks, transfer pipelines). All videotapes from remote camera surveillance shall be retained in the facility's Operating Record and available to Ecology upon request.	RPP-28538 Appendix E provides a detailed log of all in-tank and annulus videos reviewed. Tables 6-1 and A-1 also list pit inspection reports, which contain photographs of pit inspections. Section 4.7 of RPP-27591 provides results of internal inspections of transfer lines, forensic examination of transfer lines removed, and leak testing.
40 CFR 265.191(5)(ii) – Certification by an Independent, Qualified, Registered, Professional Engineer (IQRPE): This integrity Assessment Report must be certified by an IQRPE that meet the following requirements:			
17	Paragraph e (10)	40 CFR 265.191(5)(i)(10)(1): To meet the requirements of "independent," the IQRPE must not be employed by any company that is either operated, or exists, as a prime contractor of the Hanford contract team. The IQRPE cannot have worked for any company as described above for a period of one (1) year prior to undertaking the review of Hanford tank integrity assessment work.	The IQRPE has not been employed by the TFC since April of 2000. The IQRPE has been employed exclusively by Los Alamos Technical Associates, Inc., since that time.

Table H-1. HFFACO M-48-14 DSTAR Compliance Matrix. (6 Sheets)

Item	M-48-14 Reference	Description	DSTAR Reference
18		To meet the requirement of "qualified" the IQRPE must be an engineer experienced in examination of tank storage systems. Certification by the National Association of Corrosion Engineers (NACE) is desirable, but not required.	The IQRPE was specifically experienced in internal inspection of the Hanford Tanks and has a Certificate of Completion for the NACE Basic Corrosion course with a pending application for NACE certification. The IQRPE also contracted a certified tank inspector certified by the American Petroleum Institute (API) under API 510 (Pressure Vessel Inspector), API 653 (Above Ground Storage Tank Inspector), API 570 (Pipeline Inspector), and who also holds a National Association of Corrosion Engineers (NACE) Level 1 Coating Inspector certification. The inspector also qualified as independent, having never worked on the Hanford site, or for any of its contractors.
19		To meet the requirement of "registered professional engineer," the IQRPE must be registered as a professional engineer with the Washington State Department of Licensing, or by a state which has reciprocity with the State of Washington.	The IQRPE holds a Washington State P.E. license, number 36595.
20		Any IQRPE shall make the following certification unless another certification statement is agreed to with Ecology: "*I certify under penalty of law that I have personally examined and am familiar with the information submitted in this document, and all attachments, and that, based on my assessment of the plans and procedures utilized for obtaining this information, I believe that the information is true, accurate, and complete. I am aware that there are significant penalties for submitting false information, including the possibility of fine and imprisonment.*"	This certification is provided with the integrity assessment report and all supporting assessment documents.