1243679
[0071657H]

AEC RESEARCH AND DEVELOPMENT REPORT

UNCLASSIFIED

HW-66266

HAZARDS SUMMARY REPORT FOR THE HANFORD PLUTONIUM CRITICAL MASS LABORATORY

CIRCULATING COPY
RECEIVED 300 AREA
DEC 1 1960
RETURN TO
TECHNICAL INFORMATION FILES

W. A. REARDON,
E. D. CLAYTON, C. L. BROWN,
R. H. MASTERSON, T. J. POWELL,
C. R. RICHEY, R. B. SMITH
and J. W. HEALY

AUGUST 1, 1960

PLEASE DO NOT DESTROY
2-10-64

HANFORD LABORATORIES

BEST AVAILABLE COPY

HANFORD ATOMIC PRODUCTS OPERATION
RICHLAND, WASHINGTON

GENERAL ELECTRIC

THIS DOCUMENT IS PUBLICLY AVAILABLE

ROUTE TO	P.R.NO.	LOCATION	FILES ROUTE DATE
[illegible]		326	
~~[illegible]~~			
[illegible] Wittenbrock		762	FEB 11 64

RECEIVED
APR 05 2017
EDMC

UNCLASSIFIED

127

UNCLASSIFIED

HW-66266

UC-46, Criticality Studies
(TID-4500, 15th Ed.)

HAZARDS SUMMARY REPORT FOR THE HANFORD PLUTONIUM CRITICAL MASS LABORATORY

By

W. A. Reardon,
E. D. Clayton, C. L. Brown,
R. H. Masterson, T. J. Powell,
C. R. Richey and R. B. Smith

Nuclear Physics Research
Physics and Instruments Research and Development Operation

and

J. W. Healy

Consulting Radiological Scientist
Programming Operation

August 1, 1960

HANFORD ATOMIC PRODUCTS OPERATION
RICHLAND, WASHINGTON

Work performed under Contract No. AT(45-1)-1350 between the Atomic Energy Commission and General Electric Company

Printed by/for the U. S. Atomic Energy Commission

Printed in USA. Price $2.50. Available from the
Office of Technical Services
Department of Commerce
Washington 25, D.C.

UNCLASSIFIED

TABLE OF CONTENTS

	Page
1. INTRODUCTION AND SUMMARY OF HAZARD EVALUATIONS	4
1.1 Introduction	4
1.2 Summary of Hazard Evaluation	5
2. GENERAL PROGRAM OF STUDIES	7
2.1 Homogeneous Systems	7
2.2 Heterogeneous Systems	12
3. INITIAL EXPERIMENTS FOR THE LABORATORY	14
3.1 Calibration and Testing Program	14
3.2 Subsequent Program	14
4. DESCRIPTION OF FACILITY	15
4.1 Design Philosophy	15
4.2 Site Description	15
4.3 Architectural Layout	17
4.3.1 Reactor Room	17
4.3.2 Mixing Room	21
4.3.3 Auxilliary Rooms	22
4.3.4 Control and Office Building	22
5. UTILITIES AND AUXILLIARY SERVICE	24
5.1 Air Conditioning and Ventilation	24
5.2 Exhaust System	24
5.3 Fire Protection	25
5.4 Security System	25
5.5 Utilities	26
6. REACTOR EXPERIMENT AUXILLIARIES	27
6.1 Reactor Hoods	27
6.2 Mixing Hood	29
6.3 Plutonium Solution Handling System	31
6.3.1 A Short History of a Plutonium Solution Critical Experiment	33
6.3.2 Mixing Hood Tanks	34

TABLE OF CONTENTS (contd.)

Page

6.3.3 Fuel Storage Tanks 34
6.3.4 Transfer System 35
6.3.5 Sampling 35
6.3.6 Waste Disposal 35
6.3.7 Safety Limitations 35
7. REACTOR ASSEMBLIES 37
7.1 Reactor Vessels 37
7.2 Safety Rod and Rod Drive 39
7.3 Control Rod and Rod Drive 41
7.4 Dump Valves 43
7.5 Solution Handling and Pumps 45
7.6 Reflector Tank 46
8. INSTRUMENTATION 48
8.1 Nuclear Instrumentation Scrolll by reference 48
8.1.1 Reactor Control 48
8.1.2 Data 54
8.1.3 Health Monitoring 55
8.2 Nonnuclear Instrumentation 55
8.2.1 Position 55
8.2.2 Liquid Level 56
8.2.3 Temperature 56
8.2.4 Pressure 58
8.2.5 Intercommunication and Television System . . . 58
9. SAFETY AND INTERLOCK SYSTEM. 59
9.1 Permissive Interlocks 59
9.1.1 Drain Valve Relay 59
9.1.2 Assembly Room Relay 62
9.1.3 Reactor Auxilliary Relay 62
9.2 Dynamic Interlocks 62
9.2.1 Flux Monitor Interlocks 62
9.2.2 Procedure Interlocks 63

TABLE OF CONTENTS (contd.)

	Page
9.3 Scram System	64
9.3.1 Automatic Scrams	65
9.3.2 Manual Scrams	65
9.4 Interlock Bypass Panel	66
10. ADMINISTRATION OF NUCLEAR SAFETY	67
10.1 Responsibility for Nuclear Safety	67
10.2 Operating Personnel	67
10.3 Review and Approval for Experiments	69
10.4 Council for Review of Operations	70
11. LIMITATIONS ON OPERATING PROCEDURES	71
11.1 General	71
11.2 Contamination Control - Routine	75
12. METHODS OF DETERMINING CRITICALITY	80
12.1 Criticality from Volume Change	80
12.2 Criticality from Concentration Change	80
12.2.1 Dilution Approach	81
12.2.2 Concentration Approach	81
12.2.3 Chemical Analysis	82
13. ANALYSIS OF SYSTEM HAZARDS	83
13.1 Rate-Type Accidents	83
13.2 Nuclear Safety of Various Storage Tanks	88
13.3 Reactivity Coefficients	90
14. HAZARDS EVALUATION	93
14.1 Primary Hazards	93
14.2 Estimated Consequences of an Incident in the Critical Mass Laboratory	94
14.2.1 Maximum Credible Burst	94
14.2.2 Radiological Hazards (Direct Exposure from the Burst)	94

TABLE OF CONTENTS (contd.)

	Page
14.2.3 Generation of Fission Products	99
14.2.4 Escape of Fission Products	101
14.2.5 Consideration of Radioactive Hazards to Other Major Facilities	103
14.2.6 Biological Consequences	105
15. APPENDIX	108
15.1 Computation Models	108
15.2 Site Characteristics	111
ACKNOWLEDGEMENTS	117
REFERENCES	119

HAZARDS SUMMARY REPORT FOR THE HANFORD CRITICAL MASS LABORATORY

I. INTRODUCTION AND SUMMARY OF HAZARD EVALUATIONS

1.1 Introduction

Critical mass data are needed for plutonium solutions and precipitates of plutonium in order to provide an improved basis of nuclear safety for radiochemical methods of processing plutonium from reactor fuels. The paucity of existing data, and the uncertainty in the theoretical values, requires an experimental program to obtain these data.

In order to fill the need for more extensive and detailed information on the criticality of plutonium containing systems, the Hanford Plutonium Critical Mass Laboratory has been established. This laboratory will be placed into operation in the latter half of 1960.

Since the preliminary hazards study was issued[1], a more detailed analysis of the hazards has been made. It is the purpose of this report to summarize these hazards and present the operating limitations which will minimize the probability of occurrence of a nuclear incident. This report will cover the hazards evaluation for the critical experiments with plutonium solutions. A supplement to this report, evaluating the hazards encountered in experiments with plutonium precipitates, will be issued subsequently. Since the precipitates, or simulated precipitates (solids), will not be in liquid form, the reactor assemblies and experimental procedures are different in this case.

This report includes an outline of the planned experimental program. The administration of nuclear safety in the laboratory operation is discussed. The facility is described in detail together with the proposed experimental equipment and techniques which are to be used for the initial series of critical experiments, but which apply in general to the critical experiments with plutonium solutions.

The various functions of the control and interlock systems are examined in detail. The hazards associated with abnormal operations are analyzed in detail. A maximum credible accident is hypothesized and the consequences analyzed in detail. The final evaluation of all hazards concludes that adequate safety precautions have been adopted which reduce the operational hazards to an acceptable level.

1.2 Summary of Hazard Evaluations

All aspects of safety of personnel have been examined and evaluated. A summary of the potential hazards and their evaluation follows:

a) Potential Contamination Inherent in the Handling of Plutonium Solutions - The system is designed to completely contain the plutonium solution in sealed hoods during all operations except the transfer of fuel material into or out of the system. A set of operating rules (Section 11) covering normal and abnormal operations are given which will minimize the potential contamination hazard.

b) Potential Criticality Hazard of the Various Tanks in the Solution Handling System - It is shown that the tanks used for storage, mixing, waste holdup, etc., are safe "by geometry" for all solutions having a plutonium concentration less than 700 g/l. It is expected that usable solutions having higher concentrations will not be produced, (Section 13.3).

c) Potential Excursions Incident to System Malfunctions - A series of potential hazards resulting from various component malfunctions during a critical experiment has been evaluated, (Section 13.2). The most probable of operator blunders and system failures are shown to result in excursions which are of the order of 10^{16} fissions. At least two, and sometimes three, simultaneous, component malfunctions are required to produce any excursion.

d) Radiological Hazards from a Maximum Credible Accident - A "Maximum Credible Accident" of proportions similar to excursions observed in other laboratories has been evaluated as a conservative upper limit to any excursion which might occur.

It is shown that the operating personnel in the worst locations (next to the shield wall) receive a total dose from all sources of less than two rems, (Section 14.2.2).

e) Hazards to the Environs from a Maximum Credible Accident - The conservative assumptions in the analysis (Section 14.2.5) are 1) most adverse weather conditions prevail, 2) 10 per cent of the fission products escape and, 3) one gram of plutonium escapes. It is shown that the gamma ray dose rate, three feet above the ground at a plant approximately 3000 feet away, is less than 1.0 mr/hr 24 hours after the incident. Acceptance tests of the building indicate that these assumptions are, indeed, conservative.

f) Other Hazards - The design of the auxiliary equipment, such as ventilation, air conditioning, fire control, etc., has incorporated safety features which virtually preclude any hazard from unforeseen mishaps in the handling of the fuel solutions.

2. GENERAL PROGRAM OF STUDIES

The program is intended to be a general study involving homogeneous and heterogeneous experiments needed for obtaining criticality data on plutonium solutions and precipitates. A combined theoretical and experimental study will be made of "clean" cases, i.e., to those cases in which a decisive comparison between theory and experiment can be made. With this study as a guide, the more complicated cases often encountered in plant design will be investigated experimentally; the extent to which these types of experiments will be conducted depends on the degree of correlation which can be effected between theory and experiment for the simple geometries.

From a general viewpoint, the program will have a twofold objective:

1. To supply critical mass data which will be in direct support of current processes and be of use in the design and operation of new radiochemical equipment.
2. To provide information on the physical characteristics of plutonium systems and thereby assist in the development and testing of theories for plutonium reactor systems. As such theories are developed, an increasing number of plutonium criticality problems can be solved by theoretical calculations.

Initial geometries studied will be spheres and cylinders with eventual extension to slab geometry. A comparison of the critical dimensions for the different geometries will be useful in evaluating extrapolation lengths and for determining if the relationships ("shape" factors) between plutonium systems in different simple geometries are consistent with U^{235} criticality data which have been obtained by the ORNL criticality group.

The general program of criticality studies includes the following list of experiments.

2.1 Homogeneous Systems

2.1.1 Critical Mass Studies in Simple Geometry

Plutonium in some form of a water complex is the type of system most frequently encountered. Such systems were studied under the P-11

Program[2] for plutonium concentrations up to 136 grams per liter. Since the solutions are commonly characterized by one of several plutonium concentration parameters, i.e., g/liters, g/cc, or H/Pu atom ratio, the relationship between these parameters is shown in Figure 1. The curves in Figure 1 are not completely unambiguous because the H/Pu atom ratio can be changed while maintaining a constant plutonium concentration within a relatively small range by adjusting the nitric acid molarity. The curves should be interpreted as giving the H/Pu ratio to within a few per cent. In view of the current type of separations process (continuous flow) data are now needed for higher concentrations of plutonium. As the plutonium concentration is increased, the neutron energy spectra becomes more characteristic of an intermediate reacting system rather than of a thermal type. Critical mass studies are planned with plutonium solutions, and precipitates or hydrogenous mixtures of plutonium with H/Pu^{239} ratios less than 200. The critical dimensions of spheres, cylinders, and slabs will be determined and "shape factors" evaluated for converting from spherical to cylindrical and/or rectangular geometry.

2.1.2 Experiments with Precipitates of Pu or Facsimiles

Under the proper conditions of acid molarity and temperature, a plutonium oxide polymer, $PuO_2(H_2O)_{7\ 1/2}$, (precipitate) is formed from a plutonium nitrate solution.

Of particular interest are the critical dimensions and masses for Pu-oxide hydrogen moderated systems in which the plutonium density has a maximum of 1,000 - 4,000 g/l with H/Pu ratios in the range 10 - 25, since the mixture of optimum moderation for a plutonium precipitate (polymer formation) is thought to occur in this region. Plutonium mixtures which are prepared to simulate the polymer (or the polymer itself) will not be in solution form under the above conditions of density and moderation. In this case, the criticality parameters will be determined from experiments with PuO_2-polyethylene compacts or other PuO_2-hydrogenous mixtures. The material will be in the form of solids, or compacts which have been sealed or canned for contamination control. A split-table remote

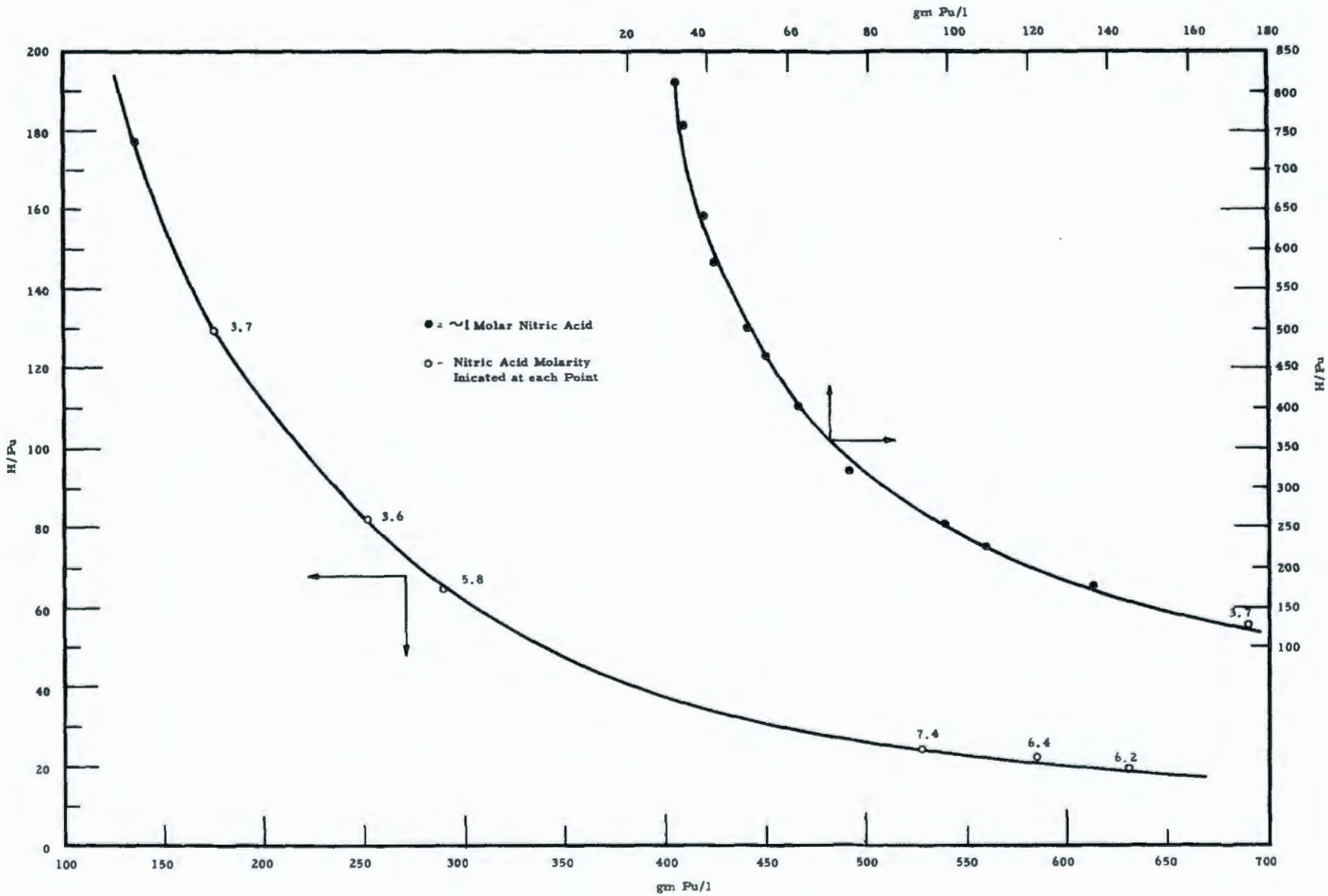

FIGURE 1

Plutonium Concentration vs. Hydrogen to Plutonium Atom Ratio

AEC-GE RICHLAND, WASH.

assembly machine will be used for these experiments. These experiments will be discussed in more detail in a supplement to this hazards report, which will be issued prior to the initiation of that phase of the program.

2.1.3 Complex Geometry

While most of the experiments will be done with geometries for which a decisive comparison between theory and experiment can be made (spheres, cylinders, and slabs are examples of such forms), the safe mass limits will be determined for "one of a kind" odd-shaped vessels which exist in separations processes, for which only crude approximations can be made. These experiments will be done as required to evaluate the nuclear safety of the processes involved.

2.1.4 Interaction Experiments

Where more than a single subcritical unit of fissile material is handled, there is always the probability of interaction between units. It must be determined in all instances that there is no criticality hazard. Theoretical calculations do not give reliable answers in many such problems, and thus experiments must be performed.

It is expected that "interaction" experiments will be conducted for arrays of cylinders and for interacting parallel slabs. In these experiments work will be done with solutions and precipitates of plutonium with bare and partially reflected units.

2.1.5 Reflectors

The effect of a given reflector on the critical mass of a system will differ depending on the median energy of neutrons in the system and on the position of the reflector relative to others which may be present. As an example, a thin stainless steel wall of a reactor vessel will reduce the effectiveness of a water reflector, whereas a thick layer of stainless steel may be a better reflector than water for a thermal reactor. For such reasons, many of the critical mass determinations will be of reflected systems. Of interest are the effects on the criticality of various reflectors,

such as concrete, water, polyethylene, stainless steel, etc., as well as experiments to determine the effective reflector savings for an "equivalent man".

2.1.6 Effect of Higher Isotopes of Plutonium, Pu^{240} and Pu^{241} on Criticality

In dilute aqueous plutonium solutions Pu^{240} acts as a neutron poison; the effect of Pu^{240} on the critical mass will vary with plutonium concentration (H/Pu ratio), through dependence upon the neutron energy spectra. In predominantly fast systems, Pu^{240} assumes the roll of a fissile isotope. On the other hand, high exposure plutonium, such as that obtained from power reactor fuels, will also contain nonnegligible amounts of the highly fissile Pu^{241} isotope in addition to the Pu^{240}. Experiments will be conducted with both dilute and concentrated solutions containing these isotopes.

2.1.7 Temperature Coefficient

Since plutonium has a large fission resonance cross section adjacent to the thermal region, the temperature coefficient for a plutonium system will differ from that of uranium. It is important that this coefficient be known to ensure safe operation of those processes where elevated temperatures are encountered.

2.1.8 Soluble Poisons

Safety by geometry and batch limits are the most common safety principles observed in the processing of fissile materials. Control through the use of soluble poisons has also been considered but dropped in some instances for lack of information. Thus, information on the effect of soluble poisons on the criticality of various systems will be developed. The poisonous effect of the standard components in certain systems, such as the nitrogen in plutonium nitrate solutions, will also be studied.

2.1.9 Resonance Detector and Cadmium Ratio Measurements

In connection with the above reactor assemblies, resonance detector and cadmium ratio measurements will be performed to gain further insight into the role which epithermal absorption plays on the criticality of plutonium systems. A more detailed knowledge of neutron spectra is desired, since

proper values of group-averaged spectrum-weighted cross sections are not available for calculational schemes (for instance, the effect of epithermal absorption on systems with H/Pu atom ratios even as high as 500:1 is not known with sufficient accuracy).

2.1.10 Reactivity Coefficient Measurements

The effect upon the reactivity of the system of substituting various materials for a void or fuel sample will yield a "Reactivity Coefficient". These measurements will be conducted in selected reactor assemblies; the results will be of use to future users of the data, both as known perturbations on the basic systems and as check points in the theoretical treatment of the reactor assemblies.

2.1.11 Measurement of Prompt Neutron Lifetime

The prompt neutron lifetime is an important parameter in the study of reactor kinetics. Measurements will be made of the neutron lifetime in selected reactor assemblies.

2.1.12 Minimal Critical Mass for Nonuniform Fuel Distribution

The minimal critical mass does not occur for a homogeneous uniform concentration of fuel but rather for that distribution which results in a "flat flux". Theoretical predictions indicate a reduction of as much as 30 per cent over a uniform fuel distribution.[3] Several experiments are planned to check these results for plutonium systems.

2.2 Heterogeneous Systems

2.2.1 Plutonium Systems

The processing and manufacture of the plutonium-alloy fuel elements are examples of a need for critical mass information pertaining to a heterogeneous plutonium metal-plutonium solution system. As with homogeneous systems, parameters such as the moderator composition, plutonium isotopic content, etc., will be studied. Of significance in this work will be the complication encountered where plutonium in solid form will exist in a plutonium solution such as in the case of plutonium dissolution where plutonium is being dissolved to form a plutonium nitrate solution.

2.2.2 Plutonium Enriched Uranium Systems

A need will arise, in connection with the Plutonium Recycle Program, for critical mass data on heterogeneous and homogeneous systems composed of natural or depleted uranium which has been enriched with Pu; the necessary critical mass experiments will be performed as required.

3. INITIAL EXPERIMENTS FOR THE LABORATORY

Occupancy of the Plutonium Critical Mass Laboratory is expected to take place during July of 1960. The experimental criticality studies will proceed soon thereafter.

3.1 Calibration and Testing Program

In the initial operation of the laboratory, several of the first experiments will be performed using Pu solutions, for which critical mass data are available, to check on the reliability and operation of the instrumentation and to advance the experimental procedures. Thus, it will be possible to check laboratory procedures and equipment with a solution whose critical mass is known and at the same time provide check points at the higher concentrations of the range previously measured in the P-11 Critical Mass Facility.[2]

3.2 Subsequent Program - Experiments with Plutonium Solutions

The following reactor vessels have been chosen for use in the initial series of criticality experiments with plutonium nitrate solutions.

	Diameters
Cylinders (bare)	11, 12, and 13 inches
Spheres (bare and reflected)	12, 13, and 14 inches

The first criticality experiment will be conducted with the 12-inch spherical (reflected) reactor. This measurement will be used as a normalizing point to the P-11 experiments and also to obtain needed data for further development of theoretical methods of critical mass calculations.

Following this measurement a series of experiments will be conducted with cylinders (bare) and with spheres (bare and reflected). The experiments will then be extended to include reflected cylinderical vessels. Additional spherical and cylindrical reactor vessels will be fabricated; the dimensions of these vessels will depend on the results of the initial measurements. The order of experiments will be that of determining the critical mass and buckling for successively increased plutonium concentrations. The second reactor hood will be utilized for the study of plutonium precipitates.

4. DESCRIPTION OF FACILITY

4.1 Design Philosophy

The design philosophy, as put forth in the preliminary hazards study, includes the following principal features:

1. Safety - to personnel and to surrounding areas, is given primary consideration.
2. Utility - in that all major operations of a critical experiment are performed without transferring fuel out of the handling system. In addition, special attention is given to equipment and design features which reduce the time spent in handling plutonium without compromising safety.
3. Versatility - to permit a wide variety of experiments to be performed .
4. Economy - in that design alternatives were evaluated by cost studies as well as the foregoing features.

The embodiment of the design philosophy in the laboratory will be evident in the following discussion of the individual components: In particular, complete containment of experimental activities within a shielded cell is provided, and fuel handling outside the cell is carried out in completely contained, geometrically safe facilities.

Utility and versatility are embodied in a flexible, integrated solution handling and transfer system.

Economy and a functional approach resulted in concrete construction for the reactor room, serving as both containment and shielding.

4.2 Site Description

The plutonium critical mass facility, shown in Figure 2, is located in the central part of the Chemical Separations area known as the 200-East Area. This area is in the west-central part of the Hanford reservation, the nearest boundary being about 12 miles to the west. The nearest populated off-site areas are Richland, West Richland, and Camp Hanford (total population about 25,000) about 22 miles to the southeast. Pasco and Kennewick (about 10,000 population each) lie 10 miles beyond in the same direction.

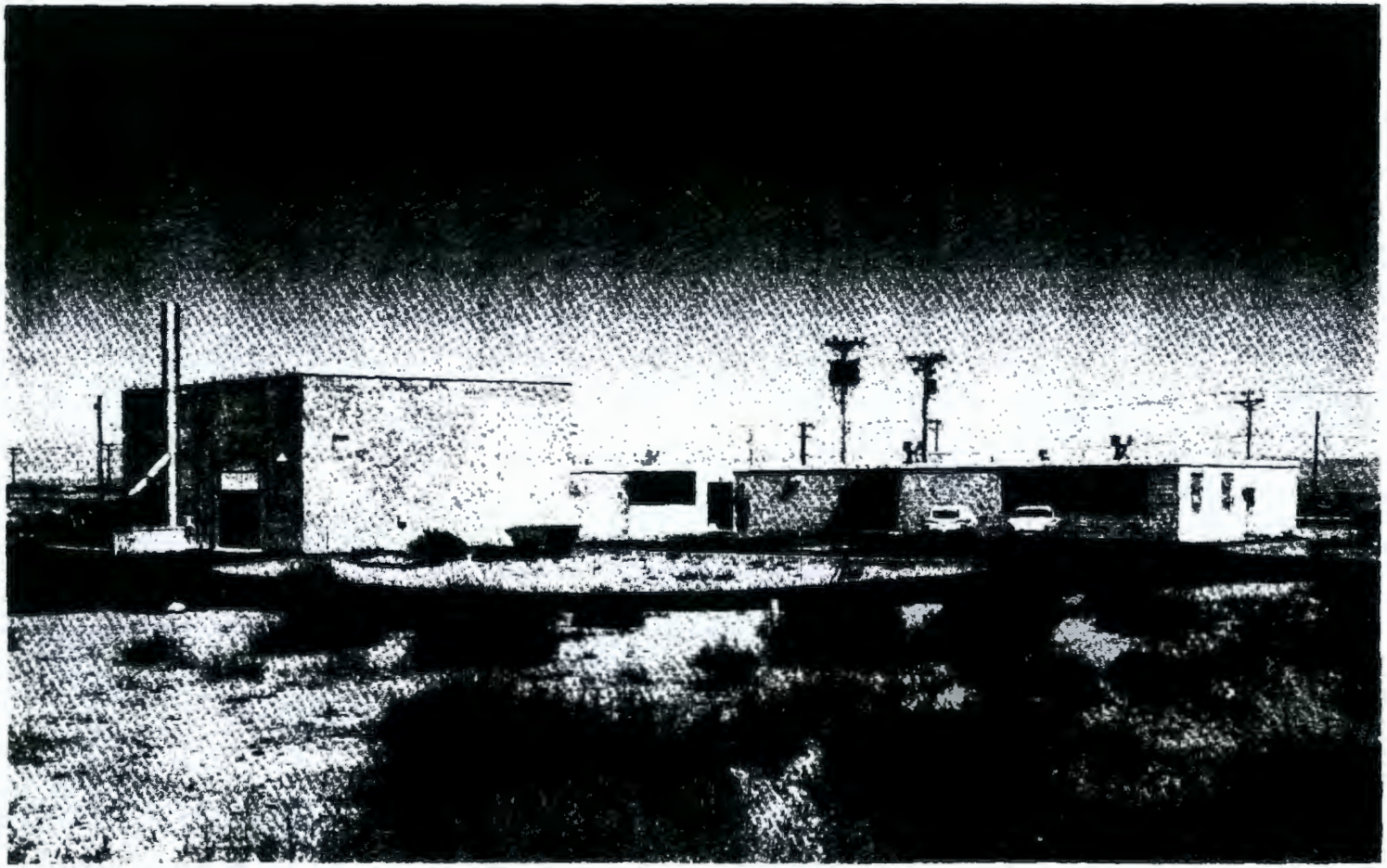

FIGURE 2

Plutonium Critical Mass Laboratory

AEC-GE RICHLAND, WASH.

Figure 3 shows the location of the facility within the 200-East Area. The nearest occupied facilities in the 200-East Area are the Purex plant and steam plant about 3,000 feet to the southeast and southwest, respectively. Neither the Hot Semiworks nor the "B" Plant are currently in operation.

The geology, hydrology, seismology, and meteorology of the site environment are described in the appendix.

4.3 Architectural Layout

Figure 4 shows the architectural plans and sections of the facility. The bold lines indicate the facility herein described, while the broken lines indicate a tentative arrangement for future expansion. The facility has essentially three architectural units: 1) The reactor-assembly room, 2) the service building closely attached to the reactor room, and 3) the control and office building. The first two are of concrete and steel construction and the latter of concrete block.

4.3.1 Reactor - Assembly Room

The assembly room within which the critical experiments are to be operated has internal dimensions of 35 x 35 feet and a ceiling height sloping from 20 to 21 feet. It is made entirely of ordinary concrete containing reinforcing steel bars. Conventional design and construction practices were used. The walls on three sides (facing the rest of the present facility and the area of future expansion) are five feet thick. The fourth wall is three feet thick, and the floor and ceiling are each two feet thick. This structure provides both shielding for normal and abnormal radiation levels within the cell and also the structural strength to withstand internal pressures potentially present in the event of a nuclear burst. The design pressure is 4.5 psig. The acceptance tests of the room have shown that the leak rate at 4.5 psig is 0.42 to 0.5 volume per cent per hour.

All the interior surfaces of the concrete, including the floor, are coated with a fiber glass reinforced resin surface (Amercoat No. 74). This coating provides a hard impervious surface which may be easily decontaminated and in addition, forms a gas tight seal over hair-line cracks and crazing in the concrete.

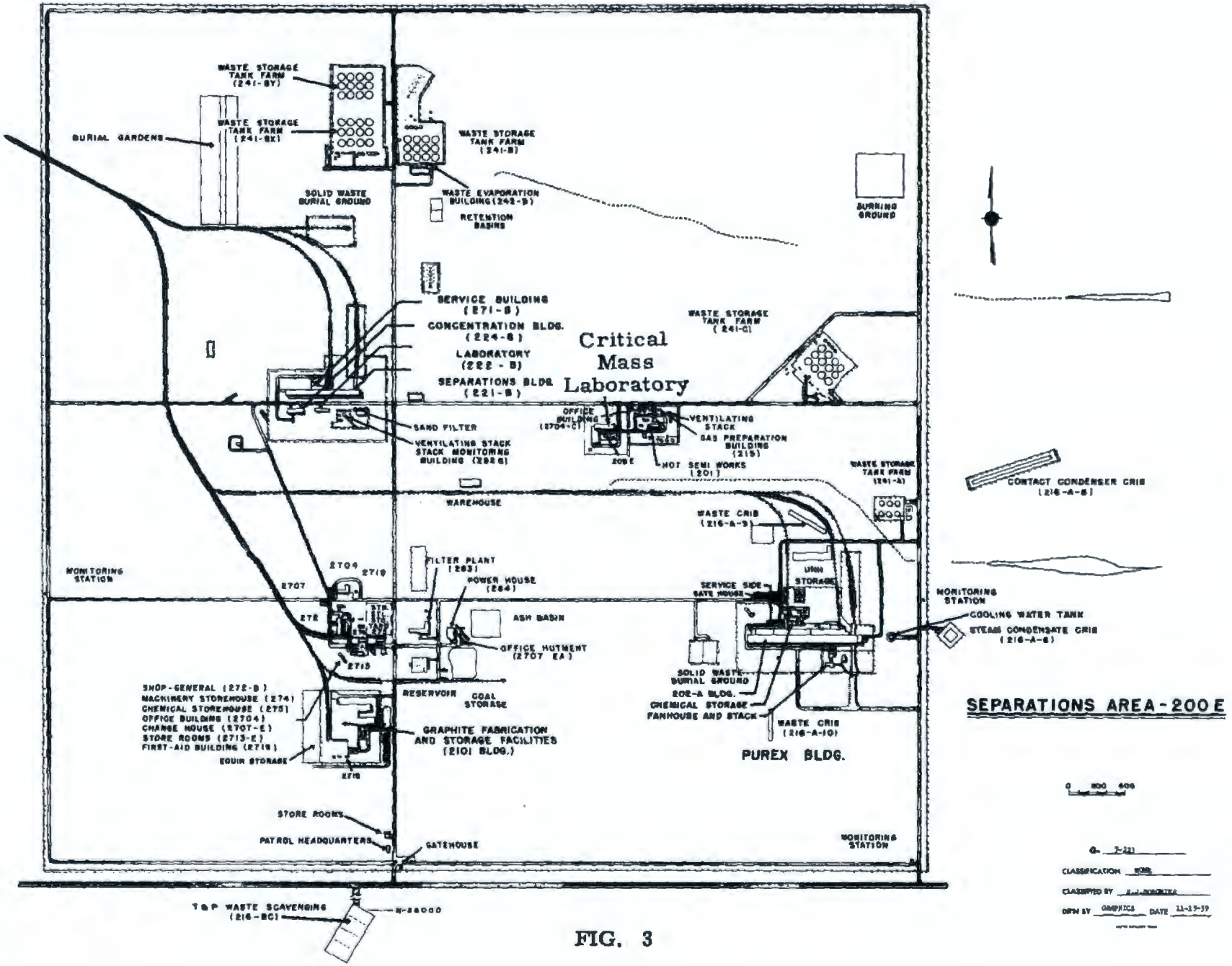
WASTE STORAGE TANK FARM (241-BY)
WASTE STORAGE TANK FARM (241-BX)
BURIAL GARDENS
SOLID WASTE BURIAL GROUND
WASTE STORAGE TANK FARM (241-B)
WASTE EVAPORATION BUILDING (242-B)
RETENTION BASINS
BURNING GROUND
SERVICE BUILDING (271-B)
CONCENTRATION BLDG. (224-B)
LABORATORY (222-B)
SEPARATIONS BLDG. (221-B)
Critical Mass Laboratory
WASTE STORAGE TANK FARM (241-C)
SAND FILTER
VENTILATING STACK
STACK MONITORING BUILDING (292-B)
OFFICE BUILDING (2704-C)
VENTILATING STACK
GAS PREPARATION BUILDING (215)
HOT SEMI WORKS (201)
WASTE STORAGE TANK FARM (241-A)
CONTACT CONDENSER CRIB (216-A-8)
WAREHOUSE
WASTE CRIB (216-A-9)
MONITORING STATION
2704
2719
2707
FILTER PLANT (283)
POWER HOUSE (284)
UNIT STORAGE
SERVICE SIDE GATE HOUSE
MONITORING STATION
COOLING WATER TANK
STEAM CONDENSATE CRIB (216-A-8)
ASH BASIN
OFFICE HUTMENT (2707 EA)
2713
SOLID WASTE BURIAL GROUND
202-A BLDG.
CHEMICAL STORAGE
FANHOUSE AND STACK
WASTE CRIB (216-A-10)
SHOP-GENERAL (272-B)
MACHINERY STOREHOUSE (274)
CHEMICAL STOREHOUSE (275)
OFFICE BUILDING (2704)
CHANGE HOUSE (2707-E)
STORE ROOMS (2713-E)
FIRST-AID BUILDING (2719)
EQUIP STORAGE
2718
RESERVOIR
COAL STORAGE
GRAPHITE FABRICATION AND STORAGE FACILITIES (2101 BLDG.)
PUREX BLDG.
SEPARATIONS AREA - 200 E
STORE ROOMS
PATROL HEADQUARTERS
GATEHOUSE
MONITORING STATION
T&P WASTE SCAVENGING (216-BC)
N-26000
0 500 1000
G- 7-221
CLASSIFICATION NONE
CLASSIFIED BY R.J. HORNING
DRN BY GRAPHICS DATE 11-13-59

FIG. 3

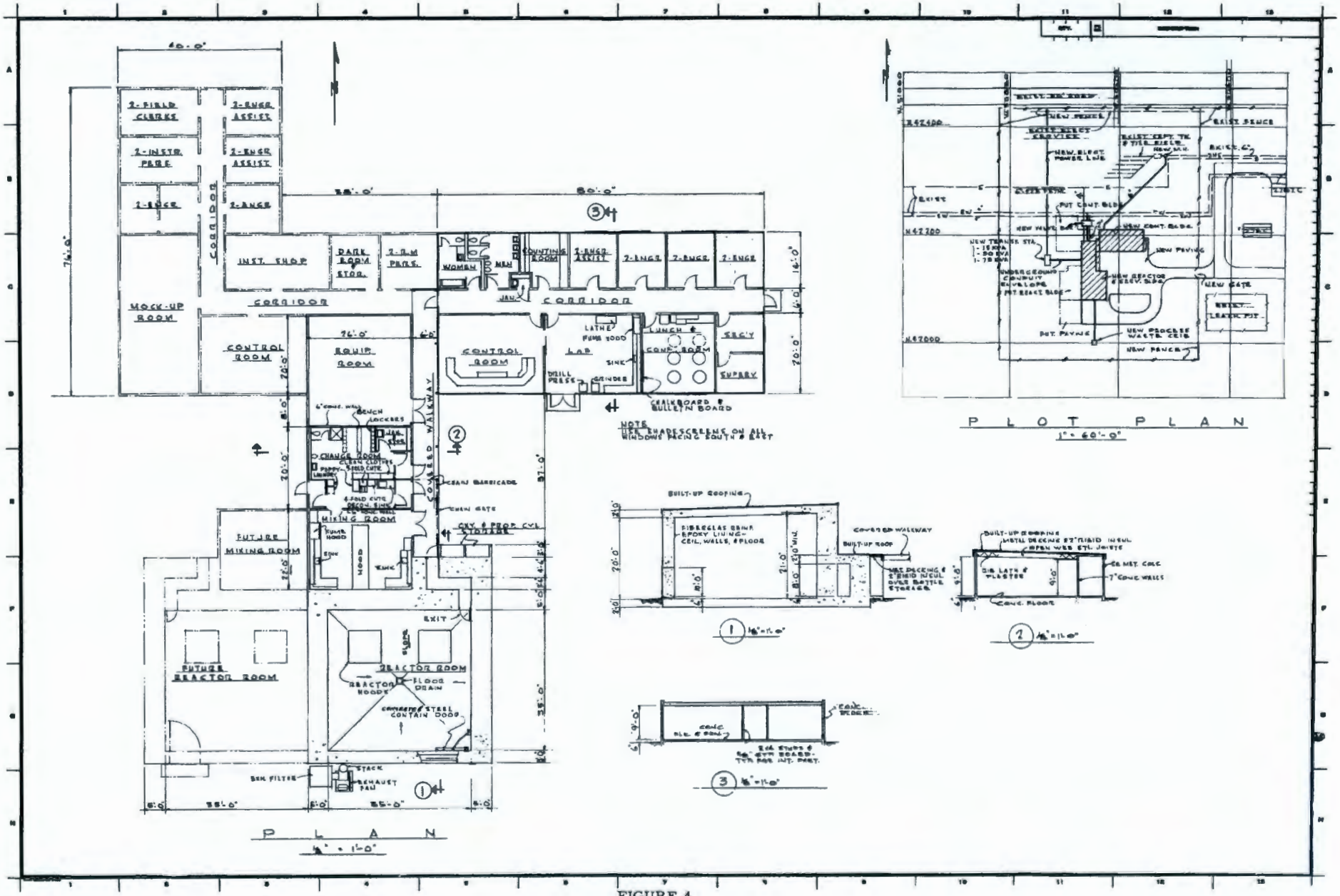

FIGURE 4

Critical Mass Laboratory

All pipes and conduits which penetrate the reactor-assembly room are welded to steel plates set flush with the interior surface of the concrete; the coating extends over the plate to minimize leaks from the room along the pipes at these points.

There are two entrances to the room. A labyrinth passage provides a shielded personnel entrance from the rest of the facility. At the inner end a gasketed steel door serves for gas tight containment, while a regular door at the outer end serves to keep the passage closed off during operation. A large concrete and steel door in the south wall provides access for large equipment. This door provides a clear opening about 9 x 9 1/2 feet (large enough to pass the containment hoods within which the assemblies are set up). The door itself is constructed of plate steel and is filled with concrete. The total thickness is 2 1/2 feet. The whole door swings on a single, roller-bearing mounted, hinge post and is operated by an electric drive. When closed, the door is sealed by means of two inflatable gaskets between the door and the frame. The effectiveness of the seal may be checked at any time by pressurizing the space between the two seals; leaks are then observed by noting pressure losses.

Two openings are provided for ventilation, an inlet and an exhaust. These are both 12 inches in diameter and are equipped with motor driven butterfly valves having resilient rubber seats for gas tight seal at the design pressure.

A heating and air conditioning unit is hung from the ceiling of the room. This unit recirculates the air in the room, and is self-contained except for steam and chilled water supplied from outside the room. The outside air inlet to the room opens into the inlet plenum of the air conditioning unit, but air enters the room only by virtue of the slight negative pressure induced by the air withdrawal at the room exhaust.

Air entering the unit is filtered by an initial glass fiber filter followed by an additional absolute filter. Air leaving the room also passes through an absolute filter before entering the exhaust system. The absolute filters are the high efficiency-fire-resistant type recommended for air cleaning at

AEC installations. Stated efficiency[4] is 99.95 per cent for 0.3 micron particles. "Fire resistant" means that the filter, particularly the filter media itself, is noncombustible (will not support combustion) although parts such as the frame and adhesive may be consumed if subjected to sufficient heat.

The exhaust and inlet valves are operable from the control room. The exhaust valve, however, is interlocked so that it may not be closed until all other openings are closed. Conversely, if the room is sealed, opening any door or the inlet valve will cause the exhaust valve to open immediately. This pattern serves to minimize the escape of any air-borne contamination in the room except through the filtered exhaust system.

4.3.2 Mixing Room

The first of three rooms in the service building, adjacent to the reactor room, is the mixing room. This room is intended to provide the facilities necessary for the receiving, handling, and preparation of the various forms of plutonium during the course of the experiments. Being a part of the facility subject to potential contamination, the concrete walls and plaster ceiling are coated with the same resin surface used in the reactor room.

The most prominent fixture in the room is the mixing hood which provides containment for operations involving the plutonium. The bulk of the extensive solution handling system is located within this hood. Additional space is provided for sampling and chemical work associated with solution preparation, handling and storage of plutonium compounds in solid forms, and some limited space for decontamination work.

Along the walls of the room there are storage space, sinks and laboratory bench facilities for nonradioactive work. A high velocity fume hood is included for general chemical work with low activity materials.

The mixing room is served by the main exhaust system. Air from the mixing hood and the fume hood is drawn out after first passing through a common filter box containing a fire resistant absolute filter of the same

type used in the reactor room. No attempt is made to seal the room or to maintain a reduced pressure in it. Air conditioning is provided by the central system serving the rest of the facility. The mixing hood is closed during all operations involving the transfer of plutonium or other radioactive materials.

4.3.3 Auxiliary Rooms

Access from the rest of the facility to the mixing room and reactor-assembly room during normal operations requires passing through the change room. This room separates the area requiring special precautions against containment from the remainder of the laboratory which does not normally require such precautions. The room is divided to provide a hot side having hand and foot monitors, a washing facility, and a disposal for used protective clothing. The other side provides showers, lockers, and storage space for clean laundry.

Equipment Room

This last room of the service building contains most of the auxiliary service and utility equipment for the facility. In addition to the air conditioning equipment, air compressors, water heaters, etc., the room contains incoming utilities and services - electric, water, and heating.

4.3.4 Control and Office Building

The control building by the covered walkway is physically separated from the other parts of the facility and contains the control room, office space and other facilities for personnel operating the facility.

The bulk of the control and instrumentation system is located in the control room. The critical experiments, apart from fuel preparation, will be operated from this room.

Adjacent to the control room is a combined shop-laboratory equipped for minor work in construction and repair of operating and experimental

equipment. No provision for work on contaminated equipment is made or intended. Equipment includes small shop tools, storage space and laboratory equipment including a fume hood served by a roof exhauster.

The remainder of the building includes a counting room, combined lunch and conference room, and office space.

5. AUXILIARY SERVICES AND UTILITIES

5.1 Air Conditioning and Ventilation

The service building and control building are served by a single air conditioning unit located in the equipment room. The unit is complete, utilizing steam from the 200-E Area steam system for heating, and a refrigerated water chiller (also located in the equipment room) for cooling. Air is distributed by ducts to all rooms. The water chiller also provides cooling water to the unit in the reactor room unit, which has no other connection with that of the rest of the facility. An automatic valve gives priority to the reactor room on the supply of chilled water when the cooling load of the whole facility would exceed the capacity of the chiller.

5.2 Exhaust System

A common exhaust system, serving the reactor room and the mixing room, is provided to eliminate the spread of any air-borne contamination to the outside of the facility. The system consists of underground, fireproof, duct to both rooms, a filter chamber, and a centrifugal fan discharging to a vertical stack which extends 10 feet above the roof. Fire resistant, absolute filters provide further filtering of all air being exhausted to the atmosphere. (This is in addition to the filtration provided at the outlet from each room.) The inlet to the fan is equipped with a damper regulated to maintain a constant reduced pressure in the filter box and ducts to the rooms. Exhaust rates from either room are thus not influenced by variations in flow from the other.

It is very unlikely that reactor room or mixing room contamination will be spread to the remainder of the facility via the ventilation ducts, for the following reasons: a) there is no physical connection between the two ventilation systems, and b) the stack effluent is discharged at a height of 10 feet above the building while the air intakes for the control building are below roof level on the service building and 90 feet away. It would require extremely unusual weather conditions to effect the coupling of the systems. The over-all exhaust system is shown as a part of Figure 7, "Heating and Ventilating System".

5.3 Fire Protection

Fire protection is provided in two forms for the facility. The reactor room is equipped with a deluge sprinkler system. The system is operated by two sensing heads in the ceiling of the room, responding to a rate of temperature rise as well as to excessively high temperatures. Three manual stations - in the mixing room, change room, and control room - are also provided to actuate the system. An automatic shut-off valve will stop the sprinkler system to limit water accumulation to about three inches on the room floor.

The automatic feature of the sprinkler system presents an additional advantage in preventing the spread of contamination in the event of a fire outside the hoods. The fuel storage tanks are designed to be safe by geometry while fully reflected. No water is sprinkled into the hoods which are sealed, hence, no additional criticality hazard arises from this source. Less damage to the auxiliary equipment will be caused by water than by fire and contamination. In the event of a very large excursion resulting in a large energy release and pressure buildup in the reactor room, the sprinkler can be used to rapidly reduce the pressure and prevent fission products and plutonium from leaking to the outside atmosphere.

A fire alarm system serves the rest of the facility. Detector heads are located in every room of the facility, including the reactor room; these actuate a central fire alarm system connected to the 200-E fire department. An outside manual alarm station is also provided. When the sprinkler system is actuated by any means, the central alarm system is also actuated.

5.4 Security System

The reactor room and mixing room, wherein plutonium is handled and stored, are considered limited areas requiring security protection. This is provided by a security alarm system consisting of detectors located at every door to these two rooms with alarm and control equipment located at the 200-E plant patrol headquarters. The system will detect unauthorized entry and supervise authorized entry into the protected area.

5.5 Utilities

The common utilities such as heating steam, sanitary water, raw water, and electrical power are obtained from the central systems serving the 200-E Area. These were all available at the site. Sanitary water is used for most purposes while raw water is provided for the fire sprinkler system and is available for decontamination purposes. A water heater is located in the equipment room.

Oxygen and propane gases are supplied to the laboratory areas and mixing hood from outdoor cylinder manifold stations.

A small air compressor in the equipment room provides compressed air to laboratory areas, to instrument air lines in the solution handling system to operate valves, and to a few other devices; for instance, the fire sprinkler system is actuated by a pneumatic system.

A larger air compressor, also in the equipment room, supplies breathing air to stations in the mixing room and reactor room. This is a reserve system to supply fresh air to masks in the event that levels of contamination require such protection while performing decontamination work in any contaminated area.

A water still in the equipment room supplies distilled water to the mixing hood for use in preparation of plutonium solutions. Distilled water is also available at the laboratory benches.

The Service Piping Flow Diagram section of Figure 7, shows the layout of the utilities.

6. REACTOR EXPERIMENT AUXILIARIES

Much of the equipment of the laboratory is common to all of the experiments which will be performed. This equipment is considered to be auxiliary to the various experimental critical assemblies, and will be discussed as such. The most prominent equipment, reflecting the safety needs imposed by the handling of plutonium, are the containment hoods within which the operations will be carried out. The extensiveness of the solution handling system reflects the difficulties of handling plutonium solutions safely.

6.1 Reactor Hoods

Two reactor hoods are semi-permanently mounted in one half of the reactor room. Each will serve for containment about a critical assembly, two of which may thus be set up at one time. The instrumentation and control system may be transferred or connected to either hood according to which assembly is being operated.

The hoods are identical, each 8 feet square and 15 feet high. They are shown in place in Figure 5, which shows the interior of the reactor room. The frame of the hood including the floor, is made of welded stainless steel. To the frame are attached transparent panels, either plastic or glass, on which are mounted glove ports for operating access to the hood. Ports are shown on the glass panels on the corner nearest to which the critical assemblies will be mounted. Additional ports will be mounted on the plastic panels as needed. A large door is provided for normal equipment access. A large, circular opening is available for "bagging out" contaminated equipment, or for personnel entry by means of a "plastic man" re-entrant plastic tube.

Both hoods are served by a single, air recirculating, filtering, and cooling system. Air leaves each hood through a set of absolute air filters and a regulating valve which automatically keeps the hood-room differential pressure at minus 1 inch of water when the hood is closed. The combined flow from both hoods passes through an additional absolute filter, through the cooling coil to the fan to be returned to the inlets to each hood. Either

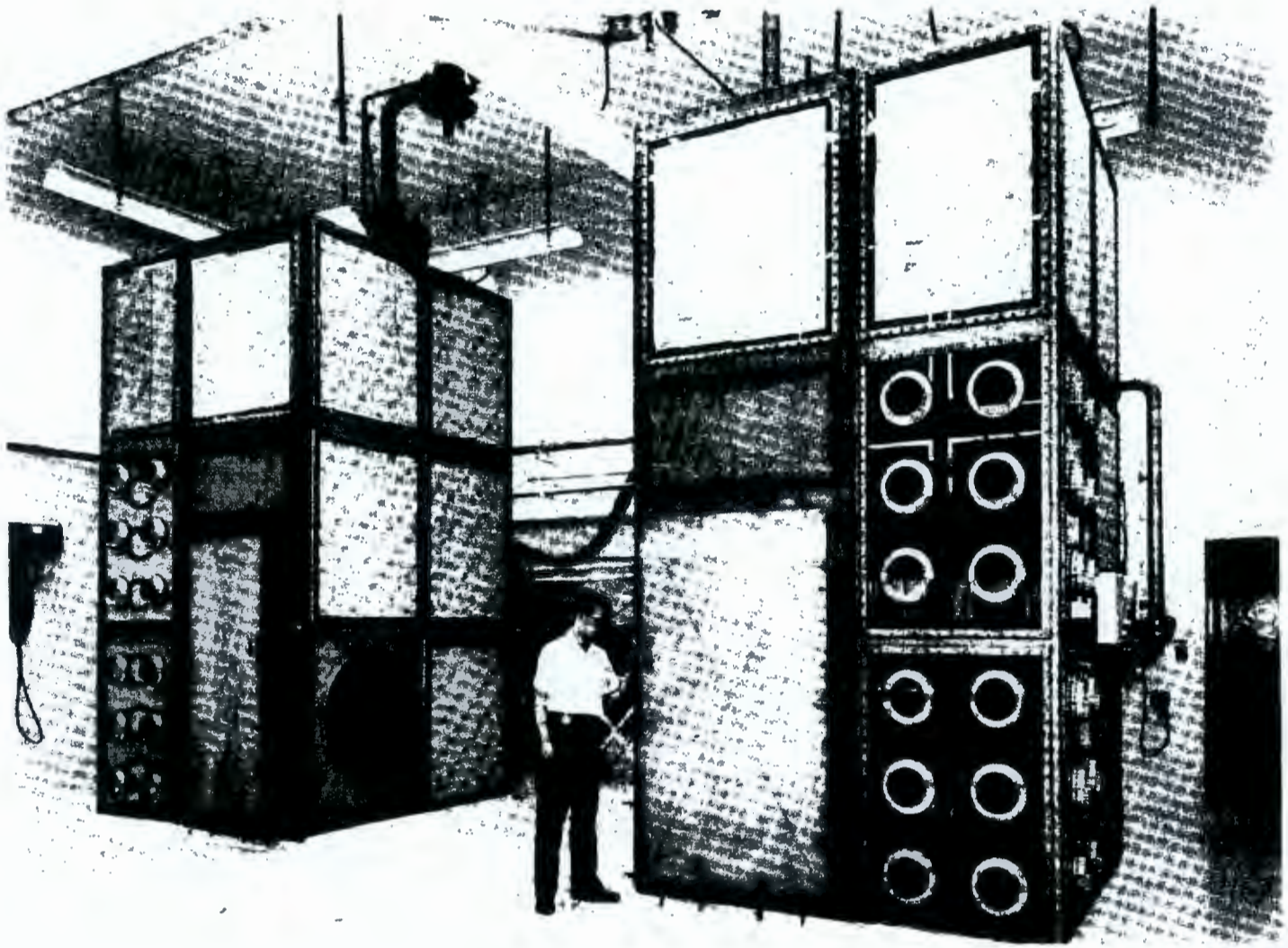

FIGURE 5

Reactor Hoods

AEC-GE RICHLAND, WASH.

hood may be closed off from the system diverting full flow of air to the other. This system may be operated while the reactor room is sealed. The outlet of the hood ventilation system may, as an alternative, be opened to the central exhaust system. Hood air is then by-passed, triply filtered, to the atmosphere whether the reactor room is sealed or not. The valve involved is operated from the control room and it must be closed for the reactor room to be sealed.

All penetrations to the hood for signal cables, electrical leads and piping associated with the experimental assemblies are provided with connectors, bushings, or packing resulting in effectively air-tight seals at the pressure difference involved.

The hood floor acts as a catch basin and is equpped with a plug valve opening to the contaminated waste drain. Provision is also made for samling any accumulated solution before draining.

6.2 Mixing Hood

The central fixture in the mixing room is the mixing hood within which nearly all fuel handling operations will be carried out. The hood consists of a welded stainless steel framework with transparent plactic panels on which are mounted glove ports. It is 15 feet long and about 5 1/2 feet wide. It is divided into an upper and lower half of about bench height, and the upper half is further divided into four quadrants. The hood is pictured in Figure 6 which shows the east side, the other side is similar in appearance.

The upper sections serve for general hood enclosed laboratory bench work and are equipped with water and gas utilities. An air lock is provided for insertion of equipment, and doors between sections are provided for the transfer of material. One section is devoted to solution preparation work. Here is located the sampling station of the solution handling system, and access port to the mixing tank. Another section is devoted generally to possible decontamination use and is so equipped; a large "bag out" port is also provided. The two other sections will serve general needs and will be used for the receipt, storage, and preparation of plutonium in forms which require manual handling before being used in the critical assemblies.

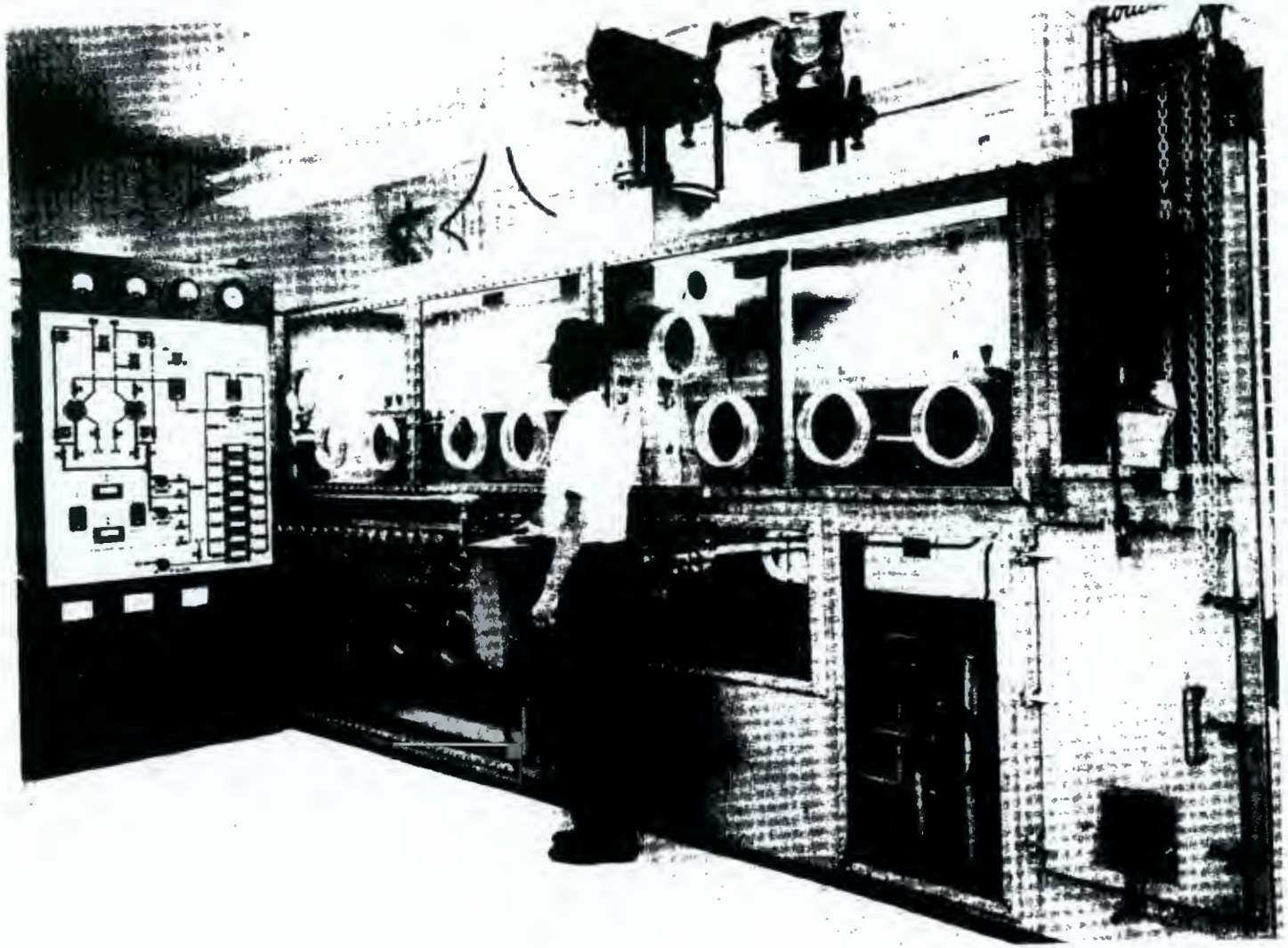

FIGURE 6
Mixing Hood and Graphic Panel

AEC-GE RICHLAND, WASH.

The lower section of the mix hood is devoted entirely to the plutonium solution handling system. Here are located the slab-shaped, waste and acid flush tanks and their polyethylene isolation slabs. The transfer manifold and pumps are also located in the lower section although the valve handles and motors are outside the hood and are visible in the photograph.

The near end section of the hood is a receiving station for solutions. Cans for transporting plutonium will be placed in this station, and by means of dip tubes, their contents transferred to the solution handling system. This station will also be used for loading out used experimental solutions as well as recoverable waste.

The hood is equipped with a once-through ventilation system in which the air is drawn out from all sections through filters. The room-hood differential pressure is maintained at minus one inch of water. The receiving section is separately equipped so that its state, open or closed, will not affect the balance in other sections. Filtered air inlets are provided for each section.

6.3 Plutonium Solution Handling System

This solution handling system is intended to serve all necessary functions in the receipt, preparations, storage, and recovery of the solutions used in plutonium solution critical experiments. The system is well integrated for a high degree of flexibility in operations. Although not directly involved when a solution experiment is being performed, the handling system cannot be entirely physically separated from the experimental apparatus.

The over-all system is shown in flow diagram form in Figure 7, Process Area Flow Diagram. The general system consists of tanks used primarily for mixing and cleaning operations, tanks used primarily for storage of prepared solutions, and a transfer system of piping and pumps serving all tanks. Provisions for sampling and waste disposal are included.

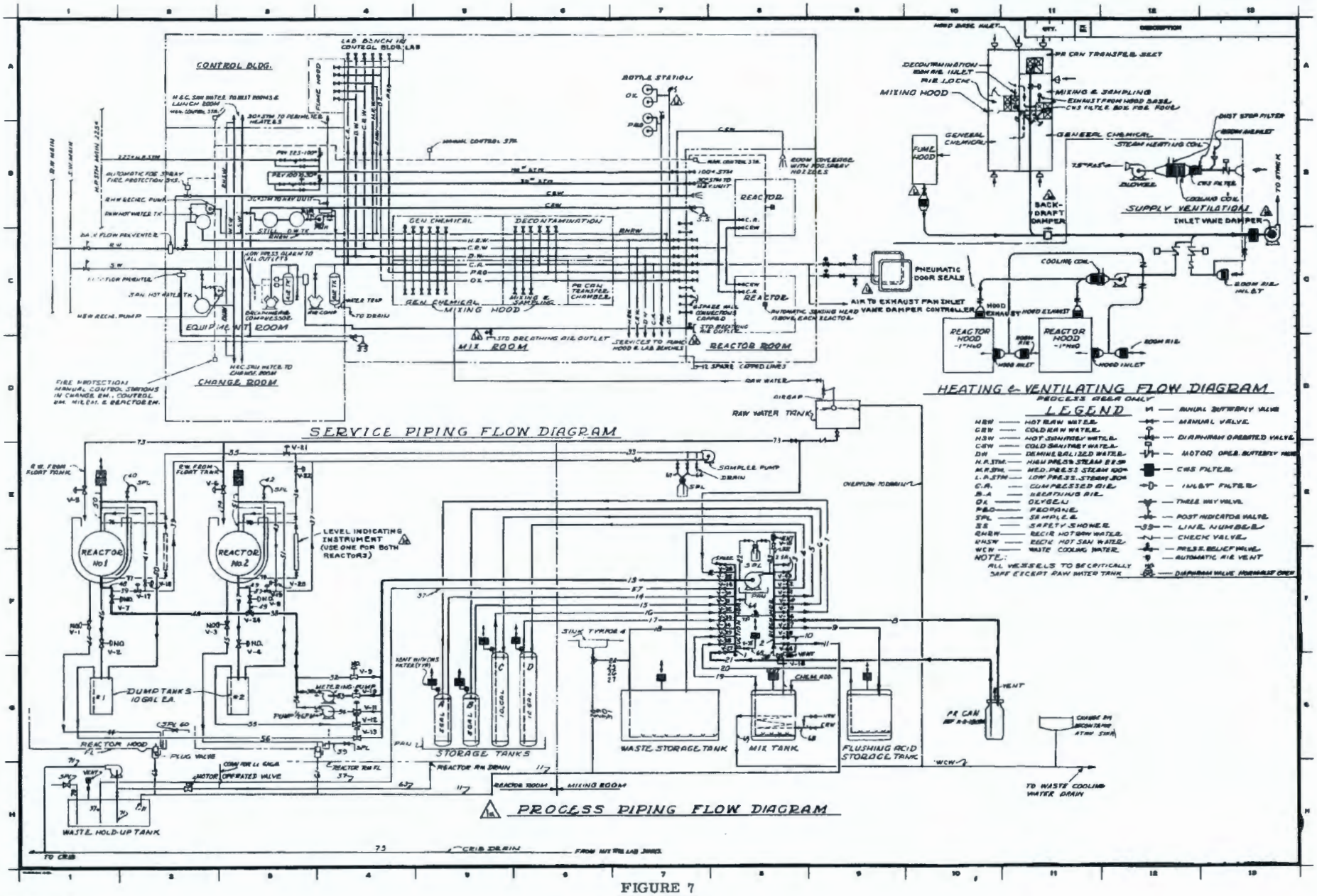

FIGURE 7

Service and Process Flow Diagrams

6.3.1 A Short History of a Plutonium Solution Critical Experiment

A short history of the progress of fuel solutions through the system, during a critical experiment, helps to clarify the schematic piping diagram. The histories of the plutonium fuels in critical experiments may vary somewhat but in general it will include the following steps (refer to Figure 7):

1. The solution is received in a PR (product receiver) can and transferred by line 21 to the suction header and thence via the transfer pump, discharge header and line 10 to the mix tank.
2. The solution having been processed for the experiment is transferred via line 19, suction header, transfer pump, discharge header and line 4, 5, 6, or 7 to a storage tank in the reactor room. We note here that there is no line by which the solution could have been transferred directly to a reactor vessel.
3. The solution is now transferred via line 14, 15, 16, or 17, the suction header, line 13, the fast or slow pump (line 53 or 54), and line 48 or 49 to a reactor vessel. Plutonium may be transferred directly into the reactor vessels only from the storage or dump tanks. An interlock system prevents the inadvertant transfer of Pu solution directly into the reactor vessels from other tanks, i.e., the direct transfer of Pu from an incoming PR can or from the mixing tank by means of either of the pumps in the reactor room is prevented.
4. The first step of the measurement completed, the solution is returned via line 49, line 52, line 13, the suction header, transfer pump, discharge header and line 10 to the mix tank where additional processing may be required.
5. If something untoward had occurred between steps 3 and 4, the solution would have been dumped via line 46 or 47 to the dump tank. Return of the fuel to the mix tank is the same as in step 4 except that line 55 or 56 now replaces lines 49 and 52.
6. The fuel having served its purpose will generally be returned to one or more PR cans via line 19, suction header, transfer pump, discharge header and line 8.

6.3.2 Mixing Hood Tanks

Three tanks are located in the mixing hood. All are critically safe slab tanks; these tanks are isolated from each other and from variable external reflection by cadmium sheets and polyethylene slabs. Each tank is equipped with continuous and full alarm liquid level capacitance probes; the levels are displayed on a graphic panel for the system. A small absolute filter is provided in the vent line from each tank to the hood atmosphere.

The mix tank is to be used for mixing experimental solutions from the received plutonium, and for making changes in solutions during a series of experiments. The tank is thermally insulated and is surrounded by tubing for heating and cooling the contents. A large port from the tank opens into the hood section immediately above for manual additions of fuel or diluent to the mix tanks. The tank volume is about 70 liter.

The flushing acid tank is intended for storage of acid, water, or cleaning solutions, used to flush out tanks and portions of the system. The tank has a volume of about 140 liter.

The waste storage tank is intended for the accumulation of used experimental solutions, and for all wastes containing recoverable concentrations of plutonium. It has a capacity of 160 liter.

6.3.3 Fuel Storage Tanks

Four solution storage tanks are located in the reactor room against the wall adjacent to the mixing room. Each tank is equipped with continuous and full alarm liquid level capacitance probes, a resistance thermometer, and a filtered vent. These vent lines, are also equipped with automatic, float actuated, traps which serve as check valves opening only to vent air and closing in the event any liquid enters the vent line. These tanks are not enclosed in hoods. Two of the tanks are of 22.5 liter capacity, and two are of 45 liter capacity. The tanks are critically safe, being made of 12 vertical 4-in. OD pipe sections spaced on 2-ft centers, and rigidly fastened to the wall.

6.3.4 Transfer System

The solution transfer system is built about a single positive displacement gear pump. Inlet to the pump is from a suction header to which is routed a valved suction line from each tank in the system. Similarly, the outlet from the pump is to a discharge header from which valved fill lines proceed to all tanks, except the reactor vessels. All tanks except the reactor vessels have top penetration only; the suction lines are dip tubes. Suction and fill lines are provided to and from the receiving station also.

6.3.5 Sampling

Sampling stations are provided for in the solution preparation section of the mixing hood. A sampling station consists of a fitting into which a sample bottle may be screwed, and solution from sampling lines circulated through it. Sampling lines are connected to both the suction and the discharge header; thus, the transfer pump can take samples from any part of the system or during any transfer operation. A separate sampling pump and station is provided with lines directly to the reactor hoods; it is possible to directly sample solutions being used in the critical assemblies.

6.3.6 Waste Disposal

All waste from areas which potentially may carry contamination is routed to a waste hold-up tank, a critically safe slab of 189 liter capacity, located below ground level outside to the south of the reactor room. The reactor room floor, hood floors and sinks, as well as the mixing room sinks, all drain to this tank. Sampling of the contents is provided for, and lines to the solution handling system permit recovery from, or transfer to, this tank of appropriate waste. Waste from this tank is discharged by pump to an underground crib or dry well.

6.3.7 Safety Limitations

The critical assemblies using solutions are essentially separate from the solution handling system and its normal operations. A single line to the reactor hoods connects to the suction header. Solution will be

drawn for the particular critical experiment from whatever storage vessel is opened to the suction header. Recovery of solution from the reactor vessels by means of the transfer pump is possible since all solutions used during an experiment pass through the suction header; no other operations with the handling system can be carried out at the same time. All manifold valves are equipped with limit switches which actuate only when the respective valve is fully closed. The status of all valves and the transfer pump is thus displayed on a graphic panel of the system in the control room. In addition, the limit switch information is incorporated in an interlock system permitting operation only when conditions are such that solution may be drawn from a single storage tank.

7. REACTOR ASSEMBLIES

The initial experiments to be performed in the facility are with solutions of plutonium. For this purpose a critical assembly is under construction for installation in the first reactor hood. The configuration is shown in Figure 8. It features a control rod and a safety rod entering concentrically directly into the solution while maintaining containment of the atmosphere above the solution in the vessel. The system is designed for easy interchangeability of vessels of different shapes and sizes. A dump valve is provided at the bottom of the vessels. A removable reflector tank is included in order to perform both reflected and nonreflected experiments with a minimum of changeover effort. A flexible cable type neutron source drive is provided.

The solution transfer and handling system for these critical assemblies has been installed as a part of the over-all facility and will be used for this and future solution critical assemblies.

7.1 Reactor Vessels

Reactor vessels for the initial experiments are fabricated of stainless steel. The vessels have openings at the top and bottom, and are fitted with flanges. The flange spacing is standard (about 18 inches face-to-face) for mounting in the critical assembly between the bottom support pedestal and the safety rod drive housing above. Thus a wide range of vessel diameters may be used. Cylinders or spheres may be mounted equally well. The bottoms of all vessels will be at the same level, the length of the upper neck depending on vessel diameter.

After fabrication the vessels are thoroughly tested for leaks, corrosion resistance and flaws. The vessels are further subjected to a boiling nitric acid test, pressurization test for strength (5 psig) and leaks, and a combined magnetic-penetrant dye test for cracks in materials or welds. Once the vessel is accepted on the basis of these tests, its integrity is assumed.

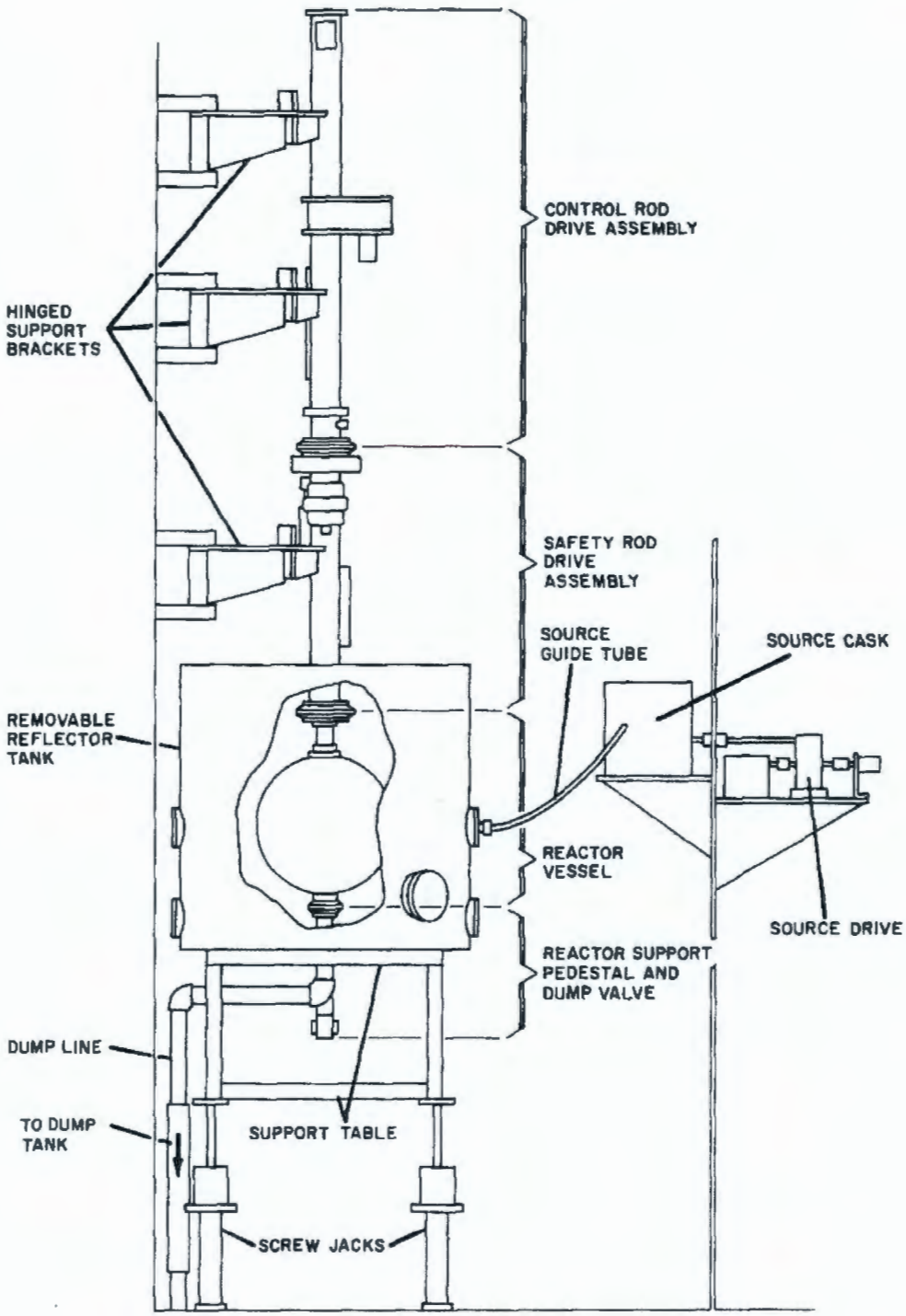

FIGURE 8
Reactor Assembly

AEC-GE RICHLAND, WASH.

7.2 Safety Rod and Rod Drive

The safety rod drive is a self-contained section mounted immediately above the vessels proper. It is shown in Figure 9.

The housing, within which the drive and safety rod move, serves as containment of the atmosphere above the plutonium solution. The housing is square with a flange on both ends for connection with the rest of the assembly.

In two diagonal corners of the housing are the two drive screws. These project through the top as shown and carry sprocket gears by which they are driven. Between the two lead screws, and carried by them, is the carriage made up of an electromagnet and an accelerating spring and its housing. A sleeve passes through the magnet to push against and accelerate the safety rod. The carriage, electromagnet and head of the safety rod are all of circular cross section. The accelerating spring is designed to provide a nominal acceleration of 9 G for a two-pound safety rod. This, however, will vary with the weight of the different rods which may be used. The distance of accelerated travel is three inches with the force decreasing linearly therein. After release and acceleration, the safety rod falls freely to its bottom stop.

The head of the safety rod serves as an armature for the electromagnet and while also holding the accelerating spring compressed, supports the safety rod. The safety rod is tubular and will be of a radius and blackness appropriate to the desired strength. Present rods are fabricated of cadmium sandwiched between stainless steel cylinders.

A bumper-shock absorber of acid-proof unicellular sponge is provided at the bottom of the drive housing to stop the safety rod.

A limit switch is provided at each end of rod travel as well as one to show when the safety rod is supported by the electromagnet. The full-in position of the drive is the same regardless of the vessel size or rod length being used. The full-out position is defined by an adjustable limit switch which may be set according to the desired distance of rod travel.

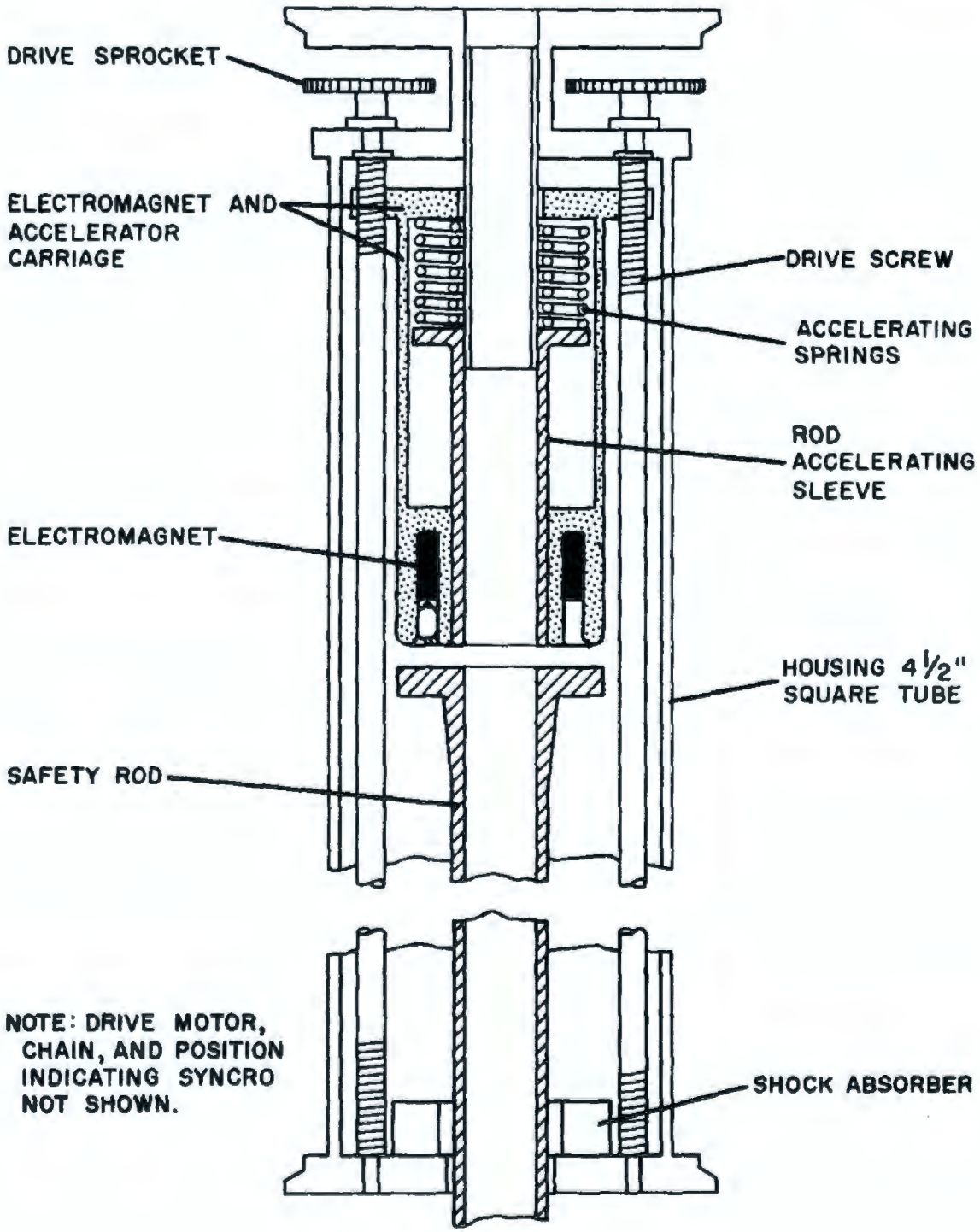

FIGURE 9
Safety Rod Drive Assembly

AEC-GE RICHLAND, WASH.

A reversible three-phase AC motor drives the lead screws by means of a chain drive. A synchro-position transmitter is also provided. A nominal speed of 0.6 cm/sec is initially planned, but may be easily changed by using different sprocket drive ratios.

The safety rod and drive, as designed, provide for entrance of a control rod down the center of and concentric with the safety rod. Alternatively, a re-entrant tube may be inserted in order to place a source or detector tube within the solution in the vessel. This could be done when in reflected experiments a control blade may be used between the reflector and the core vessel.

7.3 Control Rod and Rod Drive

The control rod drive assembly is a self-contained section designed to be mounted to the top of the safety rod drive assembly. There mounted, it will carry and move a control rod which passes through the entire length of the safety rod drive assembly and into the reactor vessel. The configuration of the drive is shown in Figure 10.

A supporting electromagnet carried by a single lead screw moves in the lower housing which serves as vessel atmosphere containment. Both are circular in cross section and two "O" rings form a seal between the electromagnet frame and the housing. A filtered vent line prevents pressure rises during rod or magnet movement.

The drive screw passes up through a drive nut in the gear box. The drive nut is rotated by a worm gear drive from a variable speed DC motor. A nominal maximum speed of 0.25 cm/sec is provided with a speed range, variable in five steps, down to approximately five per cent of this value. A synchro-position transmitter is also driven by the same worm gear. Position resolution is designed to be about 0.05 mm as read at the control room. This rod speed provides a maximum reactivity addition rate of 1.5×10^{-5} $(\Delta K/K)$/sec.

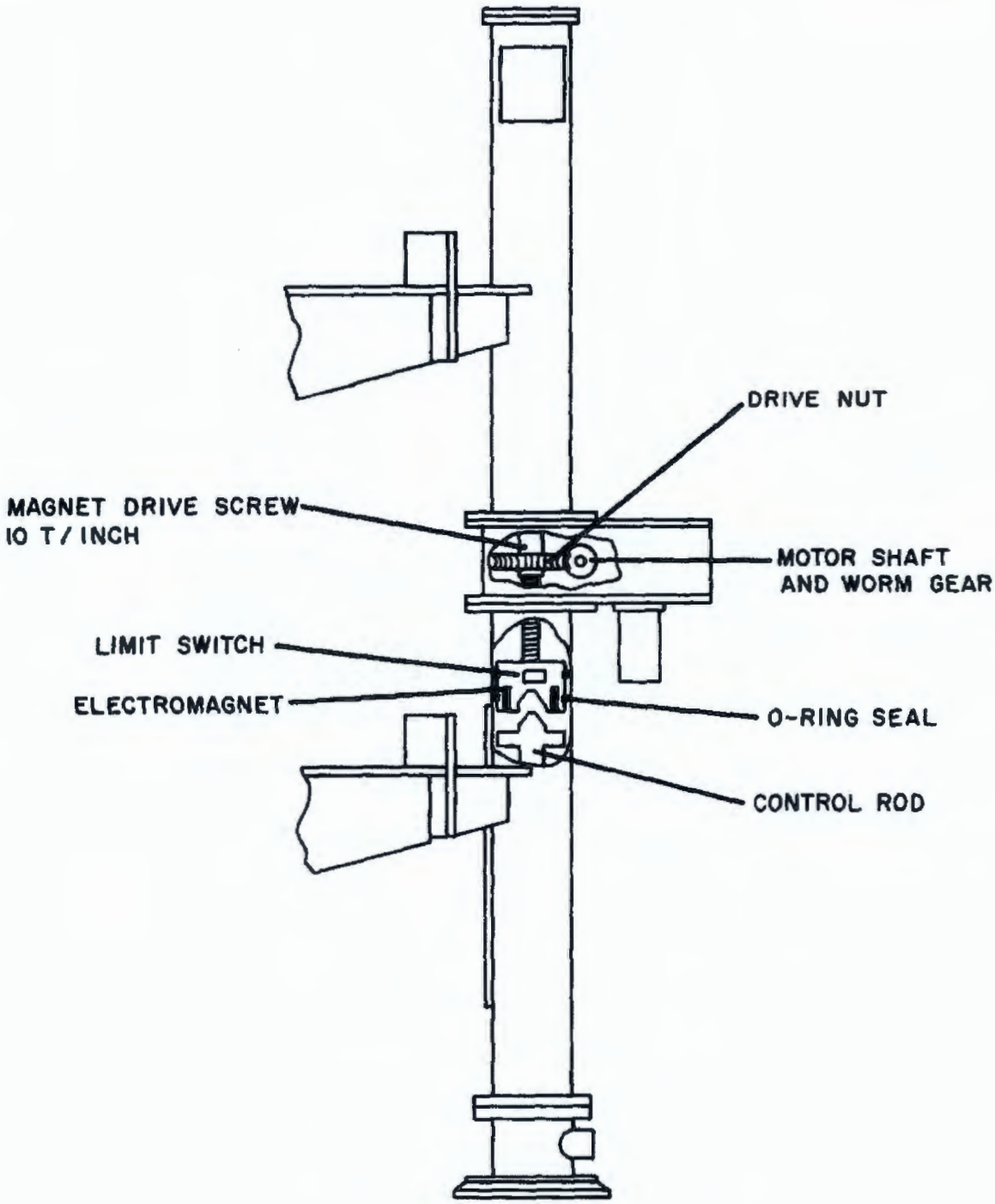

FIGURE 10
Control Rod Drive Assembly

The control rod is supported by the electromagnet and is thereby accurately driven and positioned within the vessel. The control rod is not provided with additional acceleration, but falls freely under gravity when released by the electromagnet.

The control rod will be shielded by the safety rod when the latter is released. Thus, the control rod, when used for shutdown, does not contribute to the effectiveness of a scram. Rather, it is an easily obtained (once use of a control rod is assumed) independent, though weaker, shutdown device. The control rod is equipped with a shock absorbing block of unicellular low resiliency sponge at the lower end of the housing.

A limit switch is provided to show the full-in and full-out positions of the rod as well as one showing when the rod is connected to the electromagnet.

7.4 Dump Valves

A dump valve is incorporated, together with the vessel filling line, into a lower support pedestal. This assembly is shown in Figure 11.

Reactor vessels will fit as shown with the flanges held together by a peripheral band. Two "O" ring seals are located between the two halves of the flange and the space between is vented to the dump line below the plug valve. This makes leakage between the inside of the vessel and the outside (where there may be reflector water) virtually impossible - in either direction.

The pedestal itself constitutes the dump line which continues by pipe to a dump tank. The upper end is closed by a plug valve, lapped and fitted, which completes the inner surface of the vessels. The plug is one inch in diameter and is closed by a spring-loaded, remotely actuated rod. The spring provides a limited closing force to the plug and if internal pressures rise sufficiently the plug will be forced open. The design force is two pounds. The actuating rod is driven by a DC solenoid below the assembly. When the solenoid is de-energized the valve is opened by a spring and gravity.

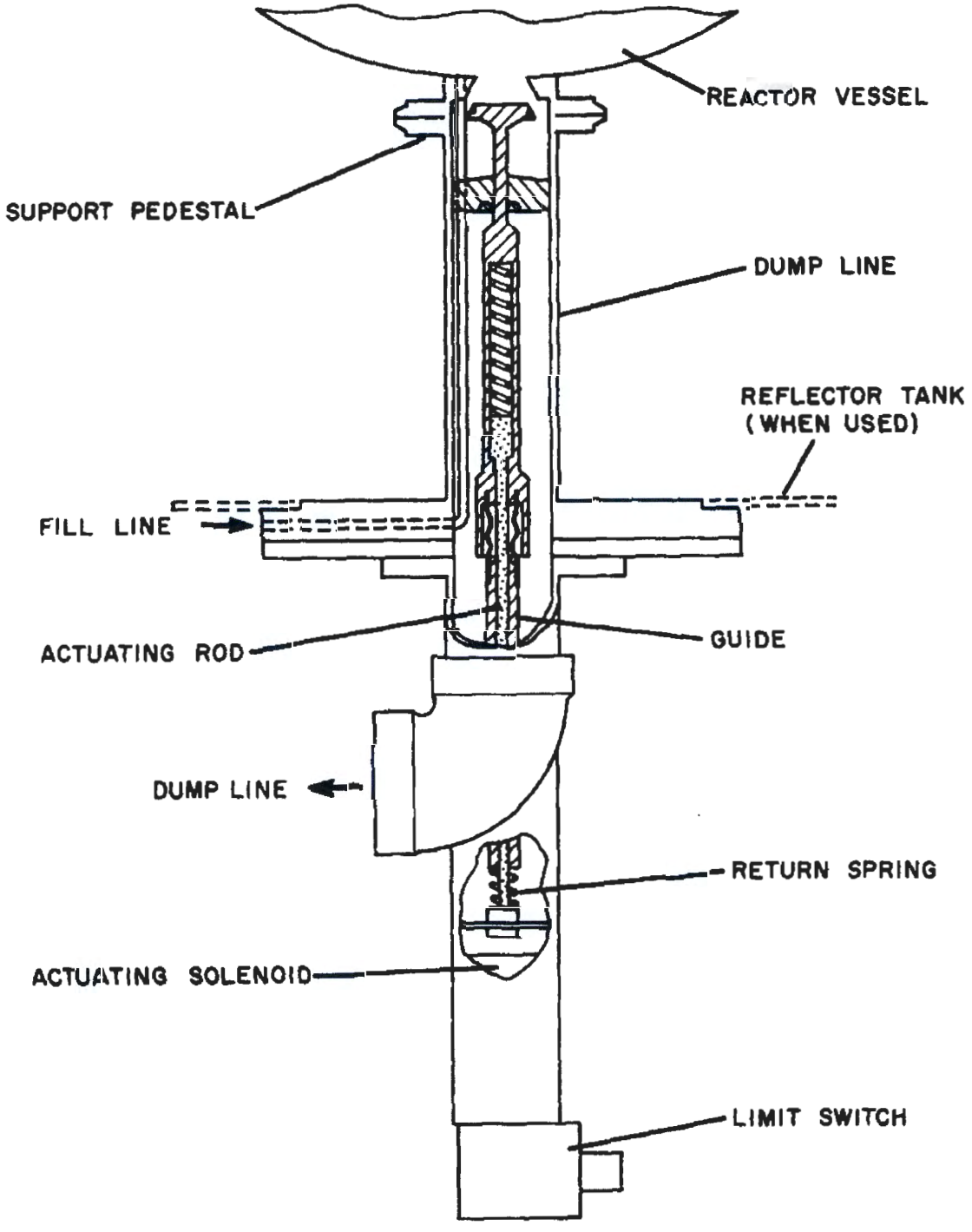

FIGURE 11
Reactor Support Pedestal and Dump Valve

The filling line is shown entering the vessel between the dump valve plug and outer edge of the pedestal. The drain valve is in this line.

A limit switch below the solenoid is used to monitor the valve position.

7.5 Solution Handling and Pumps

Transfer of prepared plutonium solutions into the critical assembly vessels is carried out by a system of positive displacement pumps and diaphragm operated valves operated from the control room. The flow diagram of the system appears in Figure 7 as part of the Process Piping Flow Diagram. The only connection with the rest of the solution handling system is the one line to the suction header from which the experimental solution is taken. Two assemblies are shown in the figure. This indicates only that provision is made to operate a solution critical assembly in each hood. Current plans call for only one such assembly in one hood. Piping to the other hood is terminated at the hood wall.

Two pumps are provided to transfer solution to the vessels. One, a gear pump, is used for transferring the bulk of the solution at expeditious speeds when the system is far from critical. This is known as the fast pump and is operated by an AC induction motor. A mechanical variable speed reducer is operable from the control room to adjust the flow rate between zero and a maximum of 75 ml/sec (4.5 l/min).

A second pump is used for making slow deliberate additions of solution when the system is near ciritical. It is a metering pump (Milton Roy Company) with a 1/8-inch piston, adjustable both in stroke length and stroke rate from the control room. The pump is powered by a Thymotrol variable speed DC motor providing a stroke rate up to 96 strokes per minute. The maximum flow rate from this pump is about 0.3 ml/min, and it is expected to be reliable at flows down to 1/2 per cent of this rate. At these flow rates, rates of reactivity additions will be of the same order of magnitude as planned for control rods. In all cases the reactivity addition rates will be required to be less than 1.5×10^{-4} $(\Delta K/K)$/sec.

Air operated diaphragm valves are used in the fuel lines. Air to these valves is controlled by electrical solenoid valves operated from the control room graphic panel. Where the safety is greatest, in case of component failure, with the valve open (solution draining) normally open solenoid valves are used. Normally open solenoid valves are used to energize them.

Dump valves for the reflector tank and reactor vessel are shown on the flow diagram, Figure 7, as being air operated. Initial experiments, however, will use solenoid actuated or latched valves for improved reliability and probably better speed of response. A scram will cause the solenoids and, therefore, the valves to open.

When the solution is dumped from a reactor vessel it flows to the tank located below the reactor hood floor. The tank is slab shaped with a capacity of about 35 liters. A suction line from the dump tank to the inlet of the pumps is provided so that transfer of the solution back to the storage tanks is not necessary before continuing the experiment. The dump tank is equipped with capacitance level probes which show the solution level and indicate when the tank is empty. The interlock system prevents pumping solution from a storage tank whenever the dump tank is not empty, and solution may be pumped from the dump tank only when the line to the storage tanks is shut off. The servomanometer used for precision level measurement within the vessel is mounted on a stand within the hood, and is connected to the system in the same manner as an ordinary sight glass.

Water dumped from the reflector tank drains to the hood floor. From there it may be drained to the waste system.

7.6 Reflector Tank

A reflector tank about 40 inches in diameter will be mounted on the support stand, shown in Figure 11, when reflected experiments are performed.

The reflector tank is equipped on the bottom with two six-inch diameter dump ports. These are held closed by a solenoid latch which will be released in the event of a scram.

Ports are provided for insertion of various items into the reflector water. These might be ion chambers, water heaters and temperature sensing elements, or, as shown in Figure 8, the re-entrant tube for the neutron source drive.

8. INSTRUMENTATION

The instrumentation of the Critical Mass Laboratory is designed to provide for safe assembly and operation of critical systems in addition to providing accurate experimental data.

The bulk of this instrumentation is contained in an instrument console in the control room. The console, shown in Figure 12, consists of fifteen cabinets designed to mount instruments with standard 19-inch relay-rack panels. The cabinets are arranged in a "U" about the operator with all cables and wiring to the instruments entering from a trench below the console.

The meters and controls for the operation of the critical assembly are located in front of the operator. The control room graphic panel and channels one through five are to his right, and the closed-circuit television screen, data channels, health monitoring, and miscellaneous instrumentation are located on the operator's left.

Some additional instrumentation is contained in the mixing room graphic panel for use, primarily, in solution handling operations.

8.1 Nuclear Instrumentation

The nuclear or flux monitoring instrumentation of the laboratory is designed to monitor neutron and gamma flux from full shutdown to nominal operating power. In the event of a nuclear excursion and the flux level exceeds the range of operating instrumentation, detectors in the form of a Nuclear Accident Dosimeter[5] are provided to measure the extent of the excursion. Figure 13 is a block diagram of the nuclear instrumentation.

8.1.1 Reactor Control

The flux instrumentation for reactor control consists of six channels, two of which are fission counter channels for subcritical and low power critical monitoring. The other four channels consist of one scintillation counter channel and three ion chamber channels for critical monitoring.

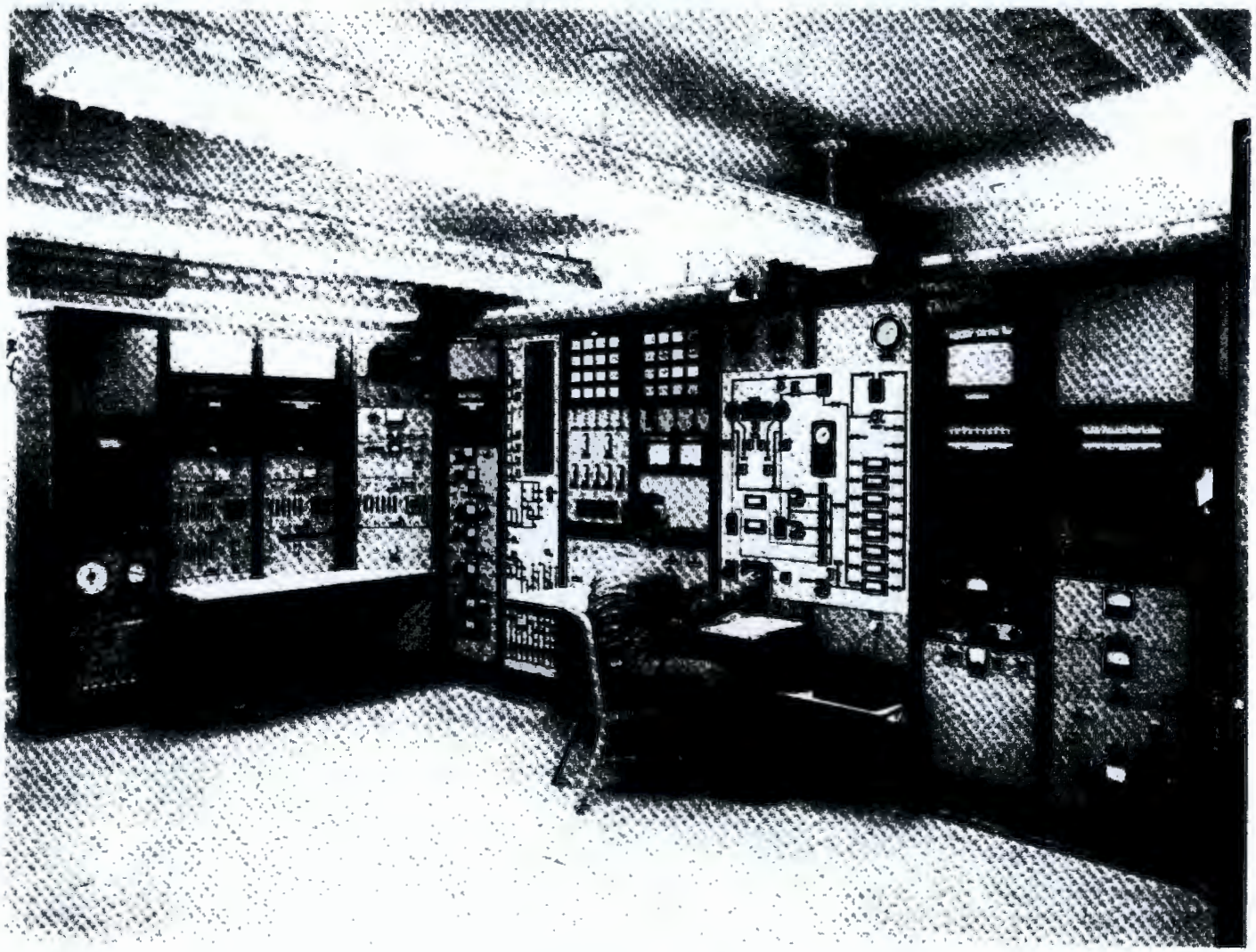

FIGURE 12

Control Console, Plutonium Critical Mass Laboratory

AEC-GE RICHLAND, WASH.

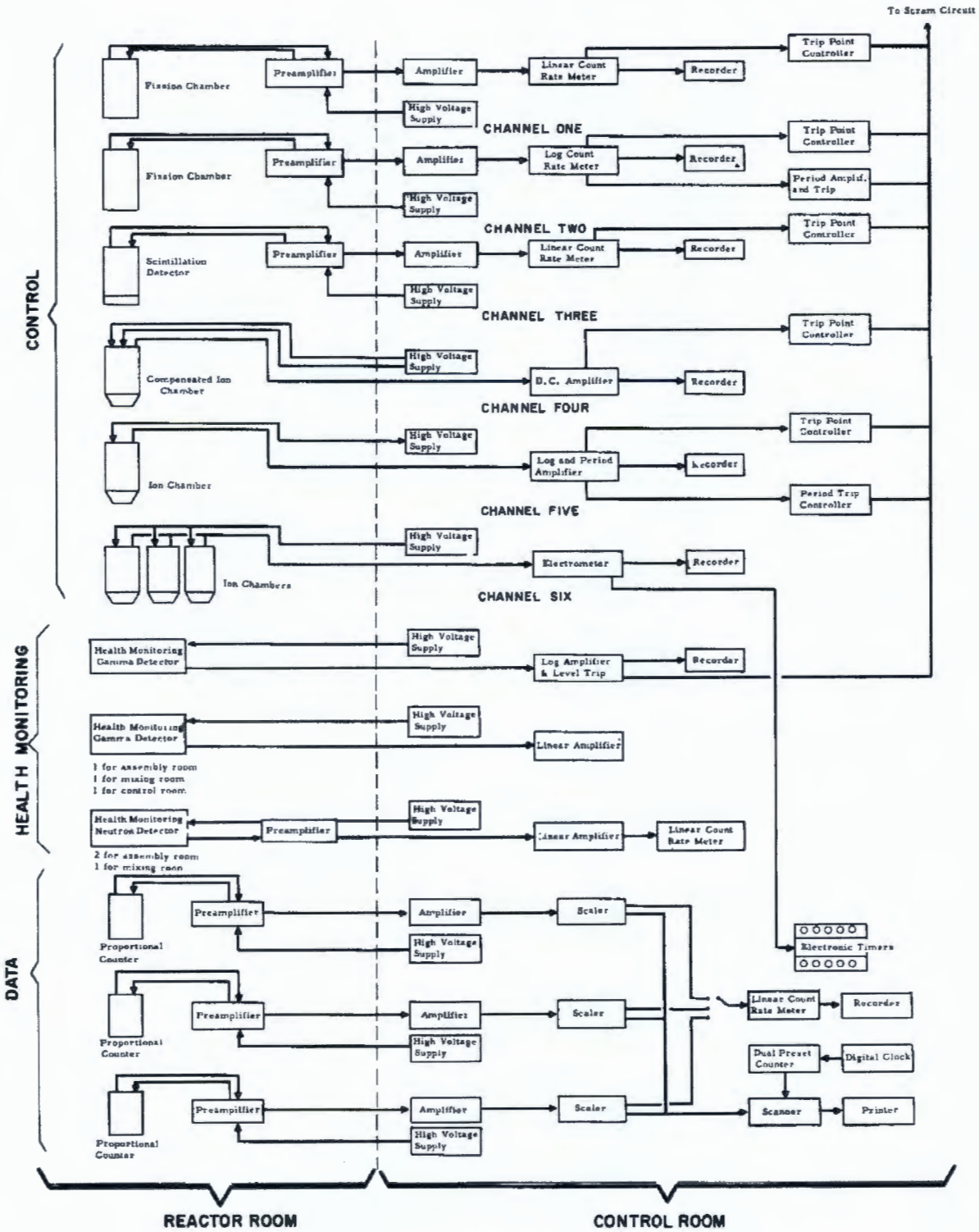

FIGURE 13
Nuclear Instrumentation

1. Channel one is a fission counter system intended primarily for subcritical monitoring. The system consists of a fission chamber, preamplifier, linear amplifier with discriminator, linear count rate meter, recorder, and high voltage supply.

   The fission chamber has a neutron flux monitoring range of 1.5 to 1.5 x 10^5 n/cm^2/sec with a neutron flux sensitivity of 0.7 CPS/nv, a gamma sensitivity of 2.2 x 10^{-11} amp/R/hr, and a rise time of 0.2 μ sec. The amplifier is a nonoverloading feedback type with a rise time of 0.2 μ sec and is used with a matching preamplifier. The count rate meter has ranges from 300 to 10,000 cpm with a coincidence error of less than two per cent at full scale on the 100,000 cpm range. The range switching transient is negligible.

   Channel one is provided with a trip point controller in the safety and interlock system. This controller may be set for both high and low flux level trips anywhere between zero and full scale on any count rate meter range. During subcritical operation, the low level trip will normally be set at a point corresponding to source level and the high level trip just above the expected subcritical neutron flux level.

   This channel has the advantage of being relatively insensitive to gamma activity and may be used to monitor neutron flux in the subcritical and lower power critical experiments in the presence of high gamma ray fields.

2. Channel two is also a fission counter system and is intended for reactor period and flux level monitoring.

   It consists of a fission chamber, preamplifier, linear amplifier with discriminator, logarithmic count rate meter, period amplifier and controller, recorder, and high voltage supply.

The fission chamber is the same type as used in channel one. The amplifier is an A1D-(R) type used with an A1D-(P) preamplifier. It has rise times of 5.0 μ sec at 0.1 mc/sec, 0.7 μ sec at 0.5 mc/sec, and 0.2 μ sec at 2.0 mc/sec. The count rate meter has a logarithmic response and covers the four decades from 1 to 10,000 cps. The period amplifier receives its input from the count rate meter and is calibrated from minus 30 to plus three seconds.

The trip point controller for channel two is the same type as used on channel one. The period amplifier controller provides an adjustable period trip point which will normally be set to scram the system at a period of ten seconds or less. Channels one and two are the startup channels and are used during the assembly and startup of the critical systems. Should the counting rate exceed the resolution capability of the linear amplifiers of these channels, in the event of operating beyond their range, amplifier blocking will occur due to "pile-up" of pulses. This "pile-up" will produce erratic counting rates and period measurements that will cause a trip and scram the reactor.

These first two channels will normally be bypassed as the power rises and reliable operating information is available from higher flux channels.

3. Channel three is a neutron sensitive scintillation counter system functioning as a flux level monitor. This channel is composed of an europium activated lithium iodide scintillation crystal and photomultiplier tube, preamplifier, linear amplifier with discriminator, linear count rate meter, recorder, and high voltage supply.

   Except for the detector, the components of channel three are essentially the same as channel one. The system has a trip point controller of the same type as channels one and two.

Channel three will scram the reactor for the same reasons as channels one and two in the event of an excursion.

4. Channel four is a neutron sensitive gamma-compensated ion chamber system. The system consists of a compensated ion chamber, micro-microampere DC amplifier, recorder, and high voltage supply.

   The ion chamber has a neutron flux monitoring range of 5×10^{2} to 1×10^{11} nv with a neutron flux sensitivity of 2.2×10^{-14} amp/nv and an uncompensated gamma sensitivity of 2.2×10^{-11} amp/R/hr. The chamber has 95 per cent gamma compensation. The DC amplifier has a range of 3×10^{-13} to 3×10^{-7} ampere with time constants of 1.0 to 0.12 second depending on the range in use.

   This channel is provided with a trip point controller with high and low flux level trips which may be set anywhere from zero to full scale.

5. Channel five is an uncompensated ion chamber system used for monitoring flux level and reactor period. It consists of an ion chamber, logarithmic and period amplifier and controller, recorder, and high voltage supply.

   The ion chamber has a neutron flux monitoring range of 5×10^{4} to 1×10^{11} nv with a neutron flux sensitivity of 2.2×10^{-14} amp/nv and gamma sensitivity of 2.2×10^{-11} amp/R/hr. The amplifier has a range of 5×10^{-11} to 15×10^{-4} ampere. The reactor period is indicated on a meter calibrated from minus 30 to plus three seconds.

   The period trip controller is similar to that of channel two and may be set to scram the system at a predetermined period. The system also has a flux level trip point controller similar to those previously described.

Channels four and five will scram the reactor with high flux level trips in the event of a reactor excursion.

6. Channel six is a multiple uncompensated ion chamber system. The system consists of three ion chambers similar to those used with channel five, a precision differential electrometer, recorder, and high voltage supply.

   The differential electrometer is a null type instrument built at Hanford by the Instrument Research and Development group. It measures deviation in reactor power level from a predetermined level by measuring the difference between a preset current and that from the ion chambers. The instrument has a minimum detectable current of about 1×10^{-10} ampere and will detect changes in current of 1×10^{-12} ampere.

   This channel is not used to initiate scram; however, it is provided with a trip point controller so that it or another system could be incorporated in the scram circuit in the future.

8.1.2 Data

The flux data instrumentation consists of a three-channel scaler scanner system (not part of channels one through six) and a period timmer system.

1. Each channel of the scaler scanner system consists of a boron coated proportional counter, preamplifier, linear amplifier with discriminator, one megacycle gated scaler with timer, and high voltage supply. In addition to the components of each channel, the system is provided with a linear count rate meter and recorder for use with any channel, a digital clock, digital recorder, (six channel) scaler scanner, dual preset counter, and high voltage supply.

2. The period timer system consists of two electronic counter-timers used in conjunction with channel six. The electronic timers have a maximum resolution of 10 μ seconds when measuring time intervals.

8.1.3 Health Monitoring

The health monitoring flux instrumentation consists of gamma and neutron detector systems. Two of each are provided for the reactor room, one of each in the mixing room, and a gamma detector in the control room.

1. One of the gamma detector systems for the reactor room is connected to the scram circuit through a high level trip. The system consists of a gamma sensitive ion chamber, logarithmic amplifier, recorder, and high voltage supply. The trip point is adjustable between zero and full scale on the meter associated with the amplifier.

   The other gamma monitor systems each consist of an ion chamber DC amplifier, and high voltage supply.

2. Each neutron detector system used for health monitoring consists of a neutron sensitive ion chamber, preamplifier, linear count rate meter, and high voltage supply.

8.2 Nonnuclear Instrumentation

The nonnuclear instrumentation comprises all instrumentation integral to the laboratory and not considered with the flux monitoring systems. It will be convenient here to consider these instruments in groups according to their function.

Many of the instruments, considered below, have interlocks in the safety and interlock system. This aspect of these instruments will be discussed with the safety and interlock system.

8.2.1 Position

The position indicated instrumentation is associated mainly with the use of the control and safety rods and neutron source. It consists of three control rod position transmitters, one safety rod position transmitter, the neutron source position transmitter, and two spare position transmitters.

The transmitters are all selsyn type, are located in the reactor hood, and are accompanied by position indicators on the instrument console. These instruments provide an accuracy of plus or minus 0.0025 ~~mm~~ cm in positioning the source and rods.

8.2.2 Liquid Level

Instrumentation is provided to measure the liquid level in various laboratory components as follows:

1. Reactor Core: A servomanometer is used to measure the liquid level in the reactor vessels. This instrument is provided with a level indicator and recorder on the instrument console and, depending on experimental conditions, is accurate and reproducible to within 0.05 mm. Figure 14 is a schematic diagram of the servomanometer.

2. Tamper and Solution Tanks: There are capacitance probes on the tamper tank to indicate reflector level. Similar probes are provided to indicate liquid level in the solution dump tank, the four solution storage tanks, the acid storage tank, the mixing tank, the waste storage and the waste storage holdup tank.

   There are "per cent full" indicators for these tanks on the control and mixing room graphic panels. Circuits are provided to stop pumping to any tank when it is full.

3. Flood Points: Probes are provided which will activate visual and aural annunciators on flood condition in the reactor hood, assembly room, and assembly room drain.

8.2.3 Temperature

The liquid containing vessels of the laboratory are normally operated at room temperature; however, at times it will be necessary to handle solutions at other than room temperature for reasons of solution preparation or experiment.

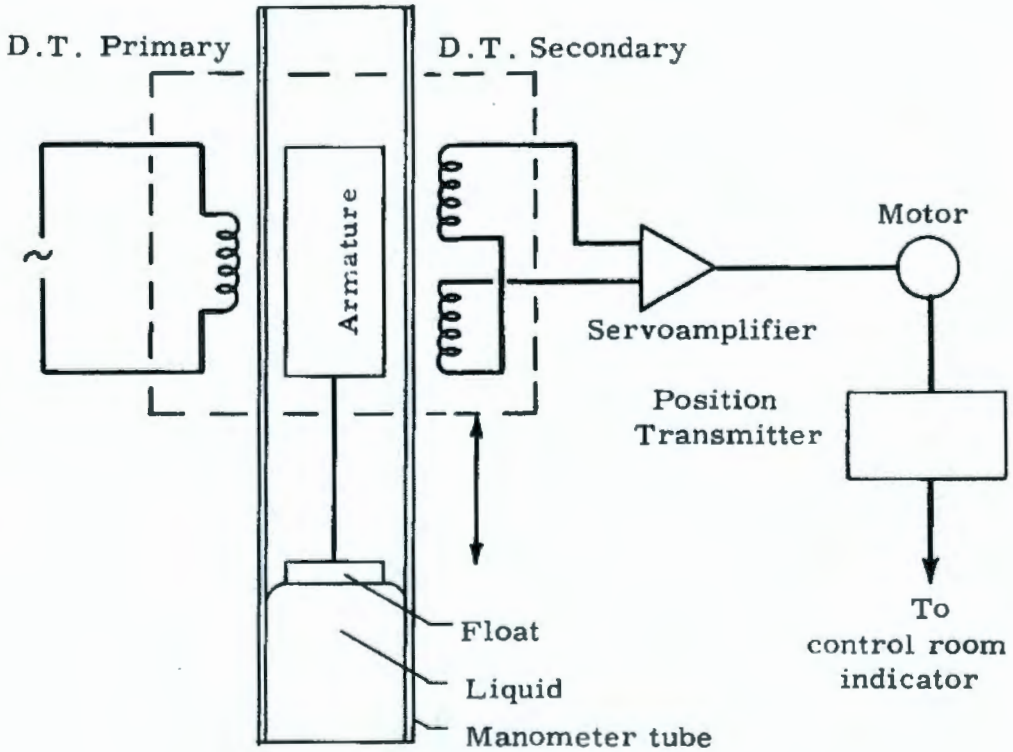

FIGURE 14
Servomanometer

Principle of Operation-

The differential transformer (D.T.) is continually positioned by a servo to be electrically centered about the armature.

AEC-GE RICHLAND, WASH.

1. A temperature control system consisting of a resistance temperature detector, resistance heater, and control unit allows selection and maintenance of the temperature in the tamper tank from 15 to 45 C at 0.5 C intervals.

   Crude control of the mixing tank temperature is obtained by using hot and cold water coils about the tank.

2. Resistance probes in the core and tamper tanks and thermocouple probes in the reactor hood, mixing tank, and four solution storage tanks together with temperature indicators on the instrument console are provided to monitor temperature.

8.2.4 Pressure

Provision is made for monitoring, from the control room, the pressure differential between the reactor hood and assembly room, the pressure differential between the assembly and control room, and the control room barometric pressure. In addition, indicators are provided in the mixing room to measure the pressure in the mixing hood and the air lock and product receiving sections of the mixing hood and the pressure differential between assembly and control room.

The differential pressure systems consist of a differential pressure transmitter and indicator and have an accuracy of plus or minus 0.05 inch of water. The control room barometric pressure is measured using a precision aneroid barometer accurate to 0.3 millibar.

8.2.5 Intercommunication and Television System

1. The laboratory has an intercommunication system between the assembly room, mixing room, change room, control room, lunch room, and supervisor's office. Each instrument has a capacity of twelve stations of which only six are presently in use.

2. A closed circuit television is provided to monitor activities in the assembly room from the control room.

9. SAFETY AND INTERLOCK SYSTEM

The safety and interlock system is provided to minimize the probability of error and insure the existence of safe conditions for the various operations of a critical assembly.

The circuits of the system are of the continuity-relay type and employ dual contacts and relays at all critical points. The main features of these circuits are represented on the safety and interlock panel on the control console and in Figures 15 and 16. In the figures the minus signs represent a common ground and the plus signs represent the points at which power is initially supplied. Power to satisfy the relay or allow the operation shown at the end of each path, from plus to minus, is had when all the conditions (represented by circles) along that path are satisfied.

The safety and interlock system consists of two principal parts - a system of permissive interlocks and a dynamic interlock system. The "scram" or trip circuits are incorporated in the dynamic interlock system, but for convenience will be considered separately.

9.1 Permissive Interlocks

The permissive interlocks are three groups of relays and switches controlling relays basic to the operation of the reactor systems. In Figure 15 the three groups are basic to reactor operation and their relays must be satisfied in order that the various operations of a critical experiment may be performed. These relays and their functions are:

9.1.1 Drain Valve Relay

When this relay is open the fuel is permitted to drain from the reactor vessel via the fill line into a storage tank. It may be closed, thus permitting the drain valve to be closed, by depressing the stop drain and rod scram reset push buttons. The relay opens automatically on scramming the rods.

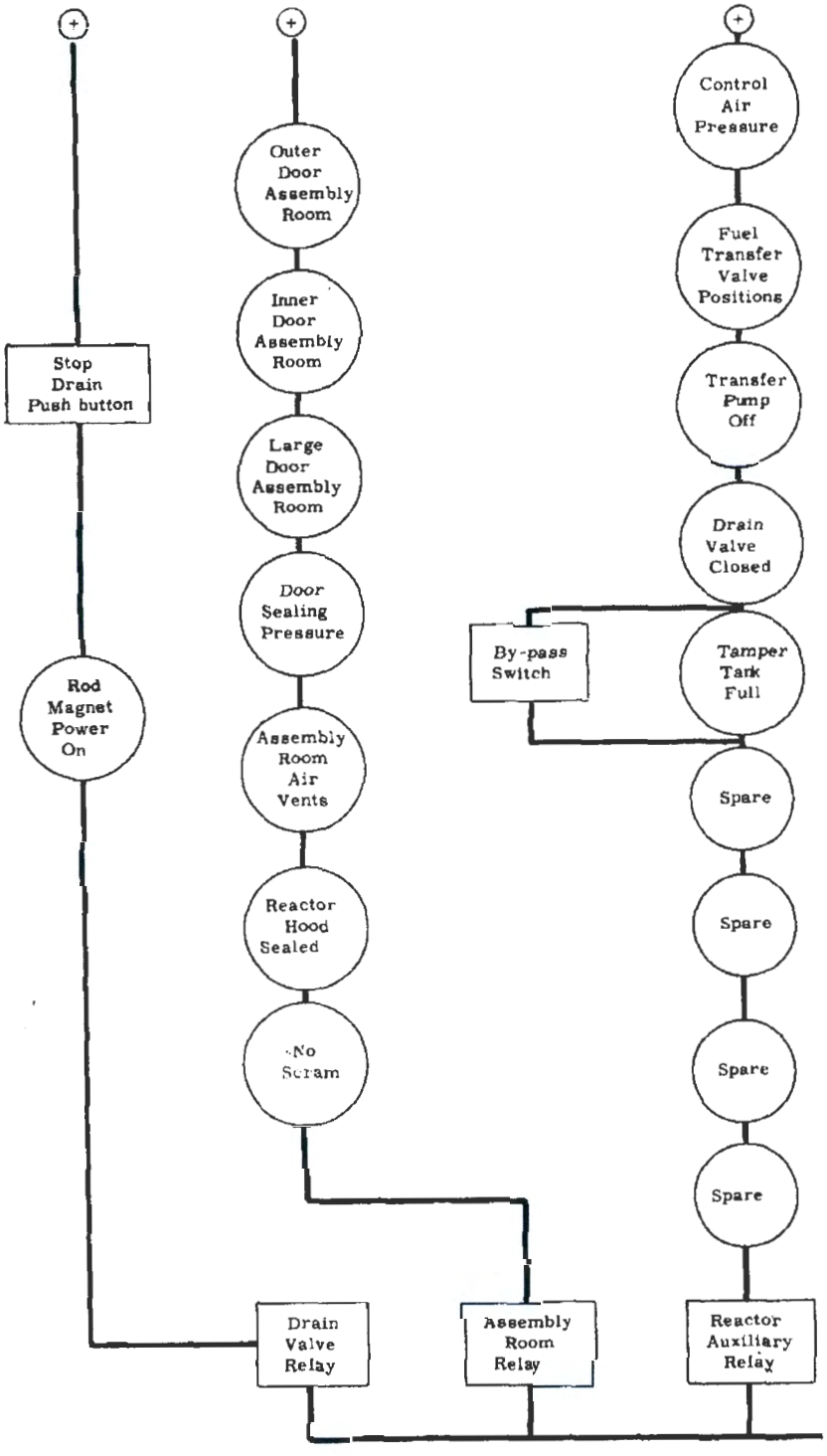

FIGURE 15
Permissive Interlocks

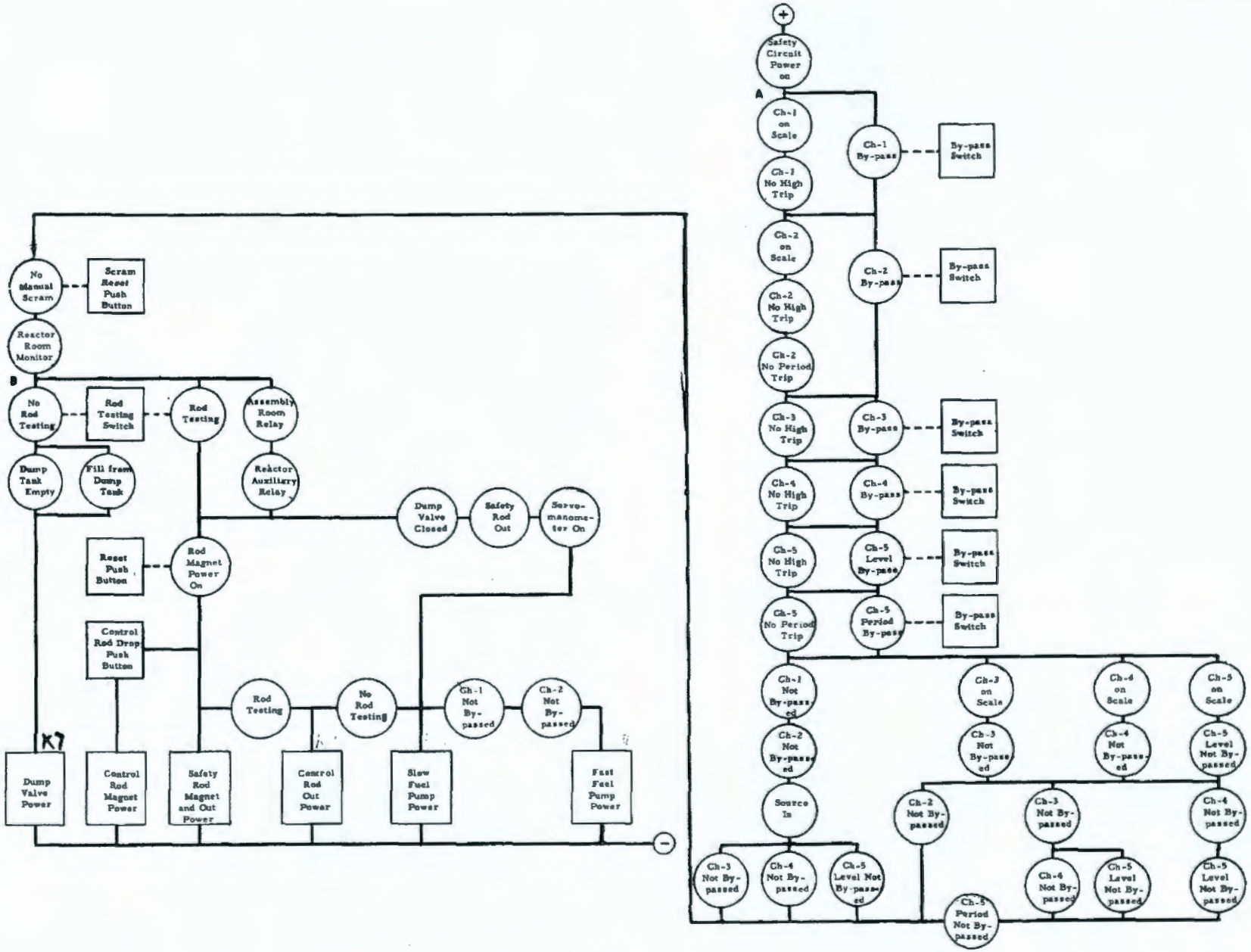

FIGURE 16
Dynamic Interlocks

9.1.2 Assembly Room Relay

This relay is satisfied and thus closed when the doors to the assembly room are closed and sealed, the assembly room air vents are closed, the reactor hood is sealed, and there has been no scram (i.e., the scram reset push button has been pressed).

9.1.3 Reactor Auxiliary Relay

This relay is satisfied when the control air pressure is high enough (at least 30 psig), the transfer pump is off, the drain valve is closed, the tamper tank is full (or bypassed), and the fuel transfer valve positions are proper, i.e., fuel can be pumped from only one tank in the system to only one other. This last condition is a guard against pumping an unknown solution into the reactor and some other vessel.

9.2 Dynamic Interlocks

The dynamic interlock system is shown in Figure 16. It may be conveniently considered in two parts - a flux monitoring interlock section and a section of procedure-type interlocks.

9.2.1 Flux Monitoring Interlocks

The flux monitoring interlock section is shown in Figure 16 from point "A" to "B". It requires continuous monitoring of the nuclear flux at all times during operation. These are the circuits using the flux monitoring channels one through five and the health monitoring channel in the scram circuit.

The interlocks form a logic network which requires that at least four flux level trips and one period trip are not bypassed at all times during operation. Three of the flux level trips must be high level trips while one is a low level trip. Two low level trips are required during startup. They are particularly important at this time as they provide additional assurance that the source is in.

The possible combinations of instrument channels which will satisfy these requirements may be seen by tracing any path from point "A" to "B". For example, during startup, the minimum requirements are that channels one and two are not bypassed or tripped, one of the level trips on channels three, four, or five is not bypassed, the health monitoring channel is not tripped, and the source is in.

9.2.2 Procedure Interlocks

If there is a path through the flux monitoring interlocks and the proper procedure interlocks, power is available to increase reactivity and make the reactor critical.

The procedure interlock section is shown in Figure 16 from point "B" to ground. In addition to having power through the flux monitoring interlocks, the interlock requirements for each of the following are:

1) Dump valve power: This power is necessary in order to close the dump valve and add fuel to the reactor. The requirements are that the dump tank be empty (or bypassed if fuel is to be added to the reactor from the dump tank - "fill from dump tank") and there be no rod testing (see below).

2) Safety Rod Magnet and Out Power: This power is necessary in order to cock the safety rod. Normally, the assembly room and reactor auxiliary relays must be satisfied and there must be no rod scram.

3) Control Rod Magnet Power: Power to the control rod magnets is obtained by satisfying the same conditions as for safety rod magnet power. A push button, however, is provided by which the control rod magnet power may be interrupted and the control rods dropped if they have been withdrawn. This is entirely separate from a rod scram and does not affect the safety rod.

4) Control Rod Out Power: The normal path for obtaining power to withdraw the control rods requires that the assembly room and reactor auxiliary relays are closed, the safety rod is out, the

servomanometer (reactor liquid level device) is operating, and there is no rod testing. The rod testing switch provides a bypass of these requirements and permits the control rods and safety rod to be withdrawn provided there is no scram. This switch may not be used while fuel is in the reactor, otherwise the dump valve will open and dump the fuel.

5) Fast Fuel Pump Power: Fuel may be added to the reactor using the fast fuel pump, provided all normal requirements for control rod out power are satisfied and channels one and two are not bypassed. This pump is used when the system is far subcritical.

It is not possible to set rigid physical limits on the use of the fast fuel pump because of the diversity of experiments to be performed. No suitable sensing device can be provided to sense nearness to criticality and initiate automatic switch-over to the slow fuel pump. Under all but the most unusual circumstances, however, no particular hazard arises from this lack because a) induced periods arising from fast pumping rates near critical will cause a system scram (see Section 13. 2); b) the fast fuel pump cannot be used when channels 1 and 2 are bypassed (see Figure 16); and c) even in the unlikely event of multiple failures of equipment or operators, the resulting excursion would not be disastrous (Section 13. 2).

6) Slow Fuel Pump Power: When the reactor is near critical or when channels one and two must be bypassed, the slow fuel pump is used to add fuel to the reactor. In order to add fuel with this pump, the same requirements must be satisfied as for the Control Rod Out Power relay.

9.3 Scram System

There are many types of "scrams". A total scram will refer to a single event which causes the reactor vessel to dump, the control and safety rods to drop, and the fuel pumps to stop. Any other scram is a "partial scram" and will be referred to by the method by which the reactivity of the system is decreased, e. g., dropping the rods or dumping the fuel.

There are two principal ways in which the reactor may be scrammed - automatically or manually. These will be considered separately.

9.3.1 Automatic Scrams

1. An automatic total scram is initiated because of power loss to fuel pumps, rod magnets, and dump valve, whenever any of the following occur during operation:
   a) Loss of safety circuit power.
   b) Low or high flux level trip on channel one when not bypassed (a trip on a bypassed channel will not cause a scram).
   c) Low or high flux level trip or period trip on channel two when not bypassed.
   d) High flux level trip on channel 3, 4, or 5, when not bypassed.
   e) Period trip on channel five when not bypassed.
   f) High flux level trip on the health monitoring channel.
2. A total scram will be caused by low flux level trip on channels 3, 4, or 5, provided that there is no path by which power may be obtained at point "B".
3. The fuel pumps stop and the control and safety rods are scrammed during operation when the assembly room relay or reactor auxiliary relay opens.

9.3.2 Manual Scrams

Manual scrams may be intended or unintended. Unintended scrams are caused by errors during operation, e.g., violating the required flux monitoring conditions by bypassing too many channels or attempting to use a channel not receiving reliable information. The manner in which unintentional scrams are caused and their resulting loss of power for necessary operations are obvious from Figure 16.

Several methods of scramming the reactor are provided in the form of push buttons for the use of laboratory personnel.

1. Total scram push buttons are provided in the assembly room, mixing room, and control room.
2. Push buttons for scramming the rods only are provided at two points on the instrument console.
3. There is a control rod drop push button on the safety and interlock panel.

9.4 Interlock Bypass Panel

To allow for changing the functions of the interlock system, a bypass panel is provided. This panel is mounted behind a locked, transparent cover. The interlock system is represented in schematic form on the panel. Pin jacks are located on the panel in order that by the use of jumper wires, different elements of the interlock system may be bypassed. For bare experiments, for example, the full reflector tank requirement will be bypassed. The jumper wires will be red and always visible behind the cover. Access to and use of this bypass panel is covered in Section 11.1, No. 19.

10. ADMINISTRATION OF NUCLEAR SAFETY

10.1 Responsibility for Nuclear Safety

The responsibility for nuclear safety in the Plutonium Critical Mass Laboratory has been placed upon the line organization. Those persons conducting critical experiments involving nuclear hazards are responsible for the nuclear safety in these operations in the same manner in which they are responsible for research in other technical operations.

The Supervisor of Critical Mass Physics, who is supervisor of the laboratory, is responsible for formulating, documenting, and administering rigorous safety rules designed to prevent supercritical incidents in the experimental program and to insure the safety of all operations in the critical mass laboratory.

The experimental programs for critical mass work are approved by the Manager of Nuclear Physics Research Operation.

10.2 Operating Personnel

The Plutonium Critical Mass Laboratory incorporates mechanical safety devices and instrumentation to minimize the chance of a reactor getting out of control and to shut down the reactor with a minimum of damage to the facility if such an event should occur. In addition, reactor hoods are provided to prevent the spread of contamination during routine operations, and heavy radiation shielding and containment are provided for the operating personnel in the event of a radiation burst. A safety and interlock system has been incorporated into the design to minimize the probability of the occurrence of a radiation incident.

Apart from the safety devices and procedures which can be established, the safe operation of the laboratory finally depends on the operating personnel.

The critical experiments will be conducted only by scientists who are well versed in the methods of critical mass measurements and who are familiar with the control instrumentation and laboratory procedures. In order to safely conduct experiments, such persons will have experience in

critical approach techniques and a basic understanding of the hazards and possible consequence resulting from too rapid changes in the reactors, particularly fuel addition, poison removal, assembly, reflector additions, etc.

Personnel qualified to conduct critical experiments will be referred to as senior experimenters. At least two persons qualifying as senior experimenters shall supervise all criticality measurements.

One of the senior experimenters will be in charge and shall have the responsibility for the safe conduct of the experiment. Both senior members must agree on the safety of the methods or procedures used during the criticality studies. In the event of a disagreement, the experiment will be suspended until it is agreed that no hazard exists in proceeding, or until a different procedure has been established which is jointly considered safe. The number of persons present in the control room during the experiments shall be consistent with efficient operating procedures and be at the discretion of the senior experimenter in charge.

Personnel will become authorized to conduct critical experiments by letter of designation prepared by the Supervisor of the Critical Mass Physics, which is subject to the approval of the Manager of the Nuclear Physics Research Operation.

Persons other than senior experimenters will become qualified to operate the reactor system when they have gained familiarity with the operation of the control instrumentation solution transfer system, interlock system and the data system for the multiplication measurements. The supervisor of the laboratory will designate those persons who have become qualified to operate the reactor system under the direct supervision of senior experimenters.

The selection of operating personnel, senior experimenters and others, will be based upon demonstrated maturity and emotional stability as well as technical competence.

10.3 Review and Approval for Experiments

Prior to undertaking any new experimental critical mass determination, a brief report will be prepared by the senior experimenter and his alternate which shall include information on the following items:

a) Purpose of the experiment.
b) Proposed methods of measurement.
c) Special safety devices which are to be used.
d) Instrumentation for neutron measurement.
e) Form of fissionable material, and method of preparation.
f) Any unusual hazards which might be associated with the experiment.
g) Personnel involved in the experiment.

This report will be addressed to the Manager of Physics and Instrument Research and Development Operation who has final authority for approval of the experimental work. Copies of the report will be sent to the Manager of Nuclear Physics Research Operation and to the Supervisor of Critical Mass Physics for review.

If a report has been prepared covering the critical mass determination for a given solution concentration, then measurements at slightly different solution concentrations would not be considered as "new" for purposes of the report. Measurements of the critical mass, as a function of temperature, or varying isotopic content, or for precipitates of Pu compounds other than solutions, interaction experiments, and "one of a kind" criticality determination in prototype process vessels, etc, would each be considered as "new" experiments.

Three nuclear safety reviews of the report will be made for each "new" type of experiment:

1. The Supervisor of Critical Mass Physics will review the nuclear safety of the experiments directly with the personnel planning the work.
2. The Manager of Nuclear Physics Research will review the written procedures which have been prepared describing the the proposed experiment and the experimental procedures which are to be followed.

3. A final review of the experiment and the nuclear safety procedures will then be made by the Manager of Physics and Instrument Research and Development Operation, who has authority to approve the proposed work; however, all persons concerned must be in agreement as to the safety of the experiments before any work may proceed.

A list of general safety rules for the operation of the Plutonium Critical Mass Laboratory is included in a later section of this report.

10.4 Council for Review of Operations

A council composed of senior technical personnel at Hanford will review the operations of the laboratory. This council will conduct an audit of the laboratory operations with respect to nuclear safety and will make recommendations governing the criticality experiments. The review of operations will be made on a yearly basis, or more frequently, when the experimental programs warrant such reviews.

11. LIMITATIONS ON OPERATING PROCEDURES

11.1 General

The following general rules are to be applied in the planning and conduct of the critical mass experiments:

1. Personnel qualified to conduct critical experiments are referred to as senior experimenters. At least two persons qualifying as senior experimenters shall supervise all "new" criticality measurements. One of the senior experimenters will be in charge and shall have the responsibility for the safe conduct of the experiment.
2. The operational safety and measurement procedures which have been prepared for the criticality studies shall be reviewed with the Supervisor of the Critical Mass Laboratory prior to commencing the experiment. The two senior experimenters must be in agreement as to the safety of the proposed experiment and must further agree upon all minor changes which are made to the assembly during the course of the experiments.
3. Personnel will not be permitted in the reactor room while changes are being made in a system containing fissile material. Provisions for manually scramming the assembly are provided at both the reactor and the instrument console.
4. All attempts to reach criticality initially with a reactor whose critical mass is unknown shall be made by means of neutron multiplication measurements. The multiplication measurements must always be made with a neutron source, except in those cases where the Pu^{240} content of the fuel is high enough to serve as the neutron source. Multiplication results will be calculated individually and independently by at least two participants, one of whom must be a senior experimenter. Separate records will be maintained of the multiplication data and of the inverse multiplication graphs.

5. A continuous record must be maintained showing the progress of the critical experiments. This record shall include a brief description of the experiment and the reactor assembly. All changes to the assembly which might result in reactivity changes must be recorded at the time they are made. Control rod positions, solution temperatures, location and types of neutron reflectors, and any other pertinent data will also be included in the record. It will be the responsibility of the senior experimenter to see that this record is maintained. The record will contain the list of those in attendance and signatures of those actively participating in the experiment.
6. No changes shall be made to the reactor which will result in increased reactivity without specific instructions from the senior experimenter in charge, or his alternate. Any person may scram the reactor at any time for any reason, real or fancied, if he believes the system to operating improperly. Likewise, any request to scram the reactor will be immediately complied with. The experiment will not be resumed until any possible malfunction of the instrumentation has been remedied or until all those concerned agree that it is safe to continue the operation.
7. No critical experiment will be conducted without at least two different types of independently operating safety mechanisms for shutting down the reactor. Types of controls may be defined as 1) operational, 2) emergency shutdown, and 3) physical disassembly.

   Operational controls consist normally of 1) the insertion of a neutron absorber (control rod) into the reactor, or 2) the removal of fissile material from the reactor (fuel bearing control rod).

   Types of emergency shutdown mechanisms include 1) the insertion of safety rods or sheets with greater neutron absorption than the operational control rods (greater strength) or

2) a means of dumping the water reflector or mechanical removal in the event of the use of solid reflectors, and 3) fuel solution dump mechanism.

Physical disassembly would consist of rapidly separating two or more constituent parts of the active core material so as to obtain sub-criticality.

Of the two types of safety mechanisms required, one must be of the operational type and one shall be of the emergency shutdown or disassembly variety in addition to the use of any safety rods or sheets.

8. No critical experiment will be conducted without the minimum operational equipment listed below:
   (1) Three neutron monitors for neutron multiplication measurements during the critical approaches.
   (2) Two flux measuring devices for safety channel circuits. These two channels must include the minimum safety provisions given below.
      a) Each channel shall be provided with high level trips for automatic scram.
      b) One of the two channels must contain a log N scale and pile period meter with preset trip.
      c) Each channel must be operated with on scale readings at all times; the interlock system includes a low level trip for one of these two channels, thus insuring that at least one channel will be on scale.
   (3) A gamma detector with high level trip.
   (4) Manual trips shall be provided for scramming the reactor at any time.
9. No fuel addition shall be knowingly made to the reactor which will cause the power to increase with a period of less than 10 seconds when the control rods are fully removed; excess reactivity of plutonium solutions is thus limited to about $k_{eff}-1 = 0.0009$. In addition the amount of fuel added shall not exceed 1/2

of that increment predicted for criticality with the control rod fully inserted.

10. All monitors and safety devices must be checked daily prior to the start of any critical experiment. The senior experimenter shall attest with his signature in the record book that the necessary detection apparatus and mechanical safety devices have been tested and are in proper operating condition; a suitable check list will be provided to facilitate this instrumentation check by an operator.
11. During all critical experiments, the reactor systems must be operated by either a senior experimenter or a qualified operator who is under the direct supervision of the senior experimenter.
12. All electronic instrumentation, and mechanical safety devices such as control rod position and speed indicators, solution or reflector quick dump systems, or reactor disassembly mechanisms shall be tested by means of *in situ* tests prior to the initial addition of fissile material to the assembly.
13. Estimates of the control rod strength shall be obtained during the critical approach prior to reaching criticality by means of the inverse multiplication curves with the control rods in the full-in and full-out position.
14. The experimental equipment must limit the rate of reactivity increase to values less than the maximum available rate of reactivity decrease.
15. Controls for the reactors shall be designed to be "fail safe" upon loss of power or an equipment failure; control switches shall be of the "dead man" type.
16. No critical experiment will be carried out without at least 2 per cent $\frac{\Delta k}{k}$ shutdown control. In general the control rods will be limited in worth to less than $1.00 in reactivity and will not necessarily serve as shutdown control.
17. Building radiation alarms shall not be by-passed during any experiment.

18. All personnel participating in the experiments must by fully familiar with emergency procedures which are developed to cover an excursion.

19. Any use which is made of the interlock by-pass panel must be fully approved in advance of the experiment as part of the overall approval procedure for the experiment. All entries to the locked by-pass panel must be reported to the supervisor of the Critical Mass Laboratory.

11.2 Contamination Control - Routing

A. General

All procedures and practices for Radiation Zone work will be in accordance with the HAPO Radiation Protection Standards[6] (RPS). Specific rules for personnel protection and contamination control will be established locally as required. A summary of the areas to be covered is given below.

B. Personnel Protection Practices

(1) Clothing Requirements

a) Minimum clothing for personnel entering a potentially contaminated zone will be lab coat and shoe covers.

b) Minimum clothing requirements for personnel working in hoods, working on hood equipment, or otherwise touching potentially contaminated surfaces, will be coveralls, shoe covers, and surgical gloves taped to coveralls. Cloth caps will be required when working under hoods or with contaminated materials.

c) Conditions warranting, additional clothing may be required.

(2) Personnel Monitoring Requirements

a) Personnel exposure to ionizing radiation will not exceed the values listed below. Measurement will be through

the personnel meter program and on-the-job monitoring.

	Dose Per 4 week Period, Rem	Dose Per Year Rem
Whole Body	1	5
Skin	2	10
Extremities	8	40

Daily and/or weekly dose limits will be established as the local conditions require.

b) Personnel meters will be required for all entries into Radiation Zones.

c) Proper step-off procedure will be followed in all Radiation Zone boundaries (i.e., the outer foot protection will be removed before stepping on the step-off pad or outside the boundary).

d) All personnel leaving Radiation Zones will make a personal survey with appropriate detection instruments.

e) A Monthly Exposure Estimate Card will be used by each person working in a zone where the dose rate is 5 mr/hr or greater or where daily dose would exceed 10 mr/day. Field exposure rates greater than 100 mr/hr will be monitored by personnel of Radiation Monitoring Operation (RMO).

(3) Hood Gloves

a) Personnel working in hood gloves will make poppy checks of surgical gloves and sleeves frequently enough to maintain good contamination control.

b) Service personnel will have RMO coverage for hood glove work.

(4) Respiratory Equipment Requirements

a) Assault masks will be worn, 1) while handling plutonium or plutonium contaminated objects, enclosed in only one

layer of plastic, outside of hoods, 2) when a room is on mask status, 3) when a person is within 10 feet of operations which may be construed to present a reasonable risk of air contamination, 4) during plastic sealing operations, and 5) during PR can loading and unloading.

b) A fresh air or Chemox mask will be worn by all personnel within 10 feet of welding or burning contaminated materials. A mask fitted with an all purpose canister may be substituted during welding or burning if the contamination is less than 10,000 d/m and non-smearable.

(5) Injuries

Injuries occurring in a Radiation Zone will be treated in accordance with RPS 6.2.

C. Contamination Control

(1) Instrument Coverage

A poppy in good operating condition will be available at each job site and at each Radiation Zone exit.

(2) Glove Ruptures

a) Constant vigilance will be maintained to minimize the consequences of a glove rupture.

b) A visual inspection of hood gloves will be made on each entry.

c) A survey of hands, arms, and shoulders will be made after each removal of arms from the gloves.

d) "Pumping" of and sudden withdrawals from hood gloves will be avoided.

e) If a glove rupture occurs and is detected before the hands are withdrawn, assistance will be obtained and the area papered, except in the case of injury or hood air reversal.

f) When a glove rupture occurs, the surrounding area for a distance of 10 feet will be placed on assault mask status; if the contamination level outside of the hood exceeds 10,000 d/m, the entire room will be placed on mask status.

g) Nasal smears will be obtained after glove ruptures by RMO personnel, if deemed necessary.

(3) Contaminated Waste

a) All contaminated equipment, materials, or waste designated for burial ground disposal will be adequately packaged, sealed, and marked as contaminated radioactive waste.

b) Acid soaked waste will be rinsed thoroughly and will be placed in metal containers whenever possible to minimize fire hazard.

c) All exterior surfaces will be free of smearable contamination.

d) The maximum radiation measurement obtained will be plainly marked on the item.

(4) Tools and Equipment Survey

a) All tools and equipment routinely used in a Radiation Zone will be free of loose contamination and have less than 6 mr/hr dose rate prior to use; recognized locations will be used for storing such tools.

b) Tools or equipment to be given unconditional release from a Radiation Zone must be surveyed by RMO and must satisfy the requirements of the RPS.

(5) Laundry

a) All used SWP laundry, not contaminated above 50 mr/hr (surface) or grossly contaminated with plutonium will be deposited at approved laundry collection hampers.

b) Used SWP clothing not contaminated may be re-used.

c) Contaminated clothing is handled according to the kind and level of contamination: 1) Clothing contaminated with powder containing Pu is discarded as contaminated waste. 2) Clothing with wet contamination (or stained) is acceptable at the laundry with levels of contamination up to 50,000 d/m. 3) Clothing contaminated (as in 2) with levels between 10,000 and 50,000 d/m, shall be wrapped separately and marked for special handling. 4) Clothing contaminated in any manner with levels exceeding 50,000 d/m shall be discarded as contaminated waste.

(6) Personnel Contamination

a) In the event of personnel clothing or skin contamination, care will be exercised and assistance of co-workers or others obtained to prevent further spread of contamination due to opening doors, use of telephone, etc.

b) Self decontamination should not be attemped.

c) Procedures and practices will be refined as additional experience is obtained.

12. METHODS OF DETERMINING CRITICALITY

12.1 Criticality from Volume Change

A typical procedure for determining the critical mass of a plutonium solution is described below. The critical mass will be determined by adding small increments of fuel to the reactor vessel. An extraneous source will be used except for those cases where the plutonium-240 content renders the use of the source unnecessary. The inverse multiplication curve will be used for predicting criticality of the system while in the subcritical state. The quantity of fuel initially in the reactor shall not be more than one-third of the calculated critical mass. Fuel will be added to the reactor with the control rod partially inserted; the control rod will then be withdrawn at slow speed and the multiplication determined. The inverse multiplication curve will provide a guide for further addition of fuel to the reactor. No fuel addition will make the reactor critical prior to the evaluation of the control rod worth.

When the system contains about two-thirds of the critical mass as estimated from the inverse multiplication curves, multiplication measurements will be made with the control rod in both the "in" and "out" positions. The control rod will thus be evaluated during the critical approach. At near criticality the fuel will be added by a metering pump. The amount so added will depend on the nearness to criticality and will always be less than the amount required for criticality with the control rod inserted; the amount of fuel added shall not exceed the strength of the control rod. The solution level in the reactor will then be adjusted so as to obtain a positive period with the control rod mostly withdrawn from the reactor.

12.2 Criticality from Concentration Change

In the case of spherical geometry, adjustments will be made in the fuel concentration so as to obtain criticality in the full or nearly full sphere with the control rod mostly withdrawn from the reactor. Two ways of approaching criticality are possible based upon either dilution of concentrated

solution or adding concentrated solution to a more dilute solution for which the sphere is known to be subcritical when full. These methods are outlined below and the exigencies of inventory and expediency will determine which method will be used in a given experiment.

12.2.1 Dilution Approach

An initial fuel concentration will be chosen such that criticality could be obtained with the sphere partially filled. Small increments of concentrated fuel will be added to the reactor. From a plot of the inverse multiplication versus the mass or plutonium solution level in the sphere, an estimate will be obtained for the critical mass in the partially filled sphere. The plutonium solution will then be returned to the mix tank for dilution and mixing. A second multiplication curve will then be obtained and an estimate made of the critical height in the more completely filled sphere. This procedure will be followed, changing concentration and volume, until the reactor is critical in the full or nearly full sphere with the control rod mostly withdrawn. Fuel changes are governed by Section 11.1, paragraph 9.

The critical height or volume in the partially filled sphere will depend on the plutonium concentration. From the variation in critical height versus concentration, it will be possible to determine the critical concentration for the full sphere, i.e., when the solution height is equal to the diameter.

The critical mass of a hemisphere is also of interest, and some measurements will be made toward determining criticality in this geometry.

12.2.2 Concentration Approach

An initial fuel concentration is chosen such that the full sphere is known to be subcritical (such a concentration is readily available from the results of prior experiments.[1]) Small increments of highly concentrated fuel will be added to the reactor fuel. From the resulting inverse multiplication curves the estimated critical mass of the spheres can be obtained and concentrations adjusted to make the sphere just critical when full and the control rod withdrawn. The control rod will be evaluated at each step of the approach.

12.2.3 Chemical Analysis

In order that the chemical composition of the solutions is well known at all times, an extensive chemical analysis program is planned to coincide with the solution experiments. There will be two types of analysis made which differ only in the extent of the information required.

The short-analysis will be used as a monitor during the critical approach phase of the experiment and will yield:

a) concentration of Pu,
b) concentration of H_2O,
c) concentration of $(NO_3)^-$,
d) acid molarity, and
e) concentration of any special materials added for purposes of the experiment.

These analyses will be performed after each change in fuel concentration, as a check on log book entries and to provide accurate knowledge of the composition.

The long-analysis will be performed on each starting solution received and will be available before the solution is introduced into the system. It will also be performed after each critical experiment. There is enough redundancy in the information to provide cross checks on the accuracy of the analysis. The long-analysis will yield:

a) concentration of total plutonium by chemical technique,
b) concentration of each plutonium isotope by mass spectrometer analysis,
c) concentration of plutonium in each possible valence state,
d) specific gravity
e) acid molarity
f) concentration of H_2O
g) concentration of $(NO_3)^-$
h) concentration of Fe,
i) an optical spectrometer analysis for other materials, principally impurities,
j) other materials pertinent of the experiment.

13. ANALYSIS OF SYSTEM HAZARDS

This section is devoted to an evaluation of the possible hazards arising from the design of the fluid fuel handling system. For convenience the hazards are divided into two categories, 1) criticality hazards arising from rate-type functions of the system, such as solution pumping rate, rod withdrawal rate, etc., and 2) criticality hazards arising from the design of storage tanks, dump tanks, mixing tanks, etc. In order to make the study as definitive as possible, a wide range of experimental solutions was considered. The reactor vessels were chosen to correspond to the initial experiments listed in Section 3, and as such, do not encompass all possible experiments.

In those situations where assumptions were necessary to facilitate the calculations, the approximation was always in the direction of overestimating the hazard. Such assumptions are given with the calculational method in the appropriate places. Some reactivity effects are calculated in order to estimate parameters of interest. These are summarized in the last part of this section.

The essence of this section is to determine if the wide range of anticipated experiments using the fluid-fuel system herein described leads to any especially hazardous situations.

13.1 Rate-Type Accidents

A large variety of excursions, representing possible system failures have been computed. These are based upon rapid fuel additions (0.075 l/sec maximum pumping rate), delay time between instrument trip and actual starting of rods (estimated at 150 milliseconds), a trip level of 10 watts, and maximum safety rod withdrawal rate (0.6 cm/sec). A summary of the kinds of accidents considered appears in Table I, together with a summary of the required system failures which make them possible.

TABLE I

DESCRIPTION OF ACCIDENT SITUATIONS

Accident	Geometry	H/Pu	Full Conc.	Initial k_{eff}	Fuel Pump Rate	Safety Rod	Other Failures (see note)
A	Cyl.	200	123 g/l	0.9	0.075 l/sec	Fails	P, D
B	Cyl.	200	123 g/l	0.9	0.075 l/sec	Trips	P, D
C	Cyl.	200	123 g/l	0.9	0.020 l/sec	Fails	P, D
D	Cyl.	200	123 g/l	0.9	0.020 l/sec	Trips	P, D
E	Cyl.	200	123 g/l	1.0056*	---	With-draws	P, D, L
F	Sphere	100	242 g/l	0.9	0.075 l/sec	Fails	P, D
G	Sphere	100	242 g/l	0.9	0.075 l/sec	Trips	P, D
H	Sphere	100	242 g/l	0.9	0.020 l/sec	Fails	P, D
J	Sphere	100	242 g/l	0.9	0.020 l/sec	Trips	P, D

Note: P - Period trip fails, D - Dump valve fails, L - Limit switch at fully withdrawn position of Safety Rod fails.

* In the case of accident "E", the "initial k_{eff}" is the value of k_{eff} when the safety rod is fully withdrawn.

Summary of Results

The results from the 9-Zoom calculations indicated that the optimum solution concentration is 123 g/l, i.e., the optimum solution is that solution for which the maximum rate of change of k_{eff} with fuel addition occurs. In the case of the spheres, a concentration of 242 g/l was utilized; this is the concentration for which the 14-inch diameter sphere is nearly filled when criticality is attained. The difference in the results due to the utilization of the latter concentration instead of the 123 g/l solution is small.

Each excursion was started at k = 0.9 to simulate an operator error during the startup of an experiment. The initial power level was taken as 10^{-4} watts to approximate the source level.

Accidents A, B, F, and G assume that the maximum pump rate is being used to fill the vessel. The remainder, except for case E, assume a more reasonable pump rate (0.02 l/sec). Case E assumes that by failure of the upper limit switch on the safety rod, it has been possible to add two dollars of reactivity in the form of more fuel to a system initially critical and held down by a safety rod worth nine dollars. The accident occurs upon withdrawal of the safety rod at its maximum rate.

The parameters which characterize the excursions (peak power, minimum period, total energy release, etc.) are summarized in Table II. Of particular importance is the fact that in the worst cases presented here, the total energy released (or total fissions) is approximately a factor of 100 smaller than the postulated burst upon which the building design is based (See Section 14.2.1). The transients calculated represent the more probable kind of errors and component failures while the postulated burst is based upon a very improbable sequence of errors and a deliberate test situation.[11]

One notes that a time of 0.5 to 4 minutes is available for corrective action before delayed critical is reached. The periods at delayed critical are all short enough to cause period scrams when the instruments are set up according to operating rules. Assuming that the period trips function properly, sufficient time is available in each case for the safety rod to become partially inserted; thus a period trip failure is required to get an excursion.

If the safety rod does not go in for some reason, then the dump and drain valves must also fail on the period trip to get an excursion. While this is a slower safety mechanism than the safety rod, it is quite effective and not much fuel need be drained from the system to make it subcritical.

The estimated delay time between a trip signal and the beginning of safety rod insertion leads to the burst calculated, and is the reason for the

TABLE II

SUMMARY OF TRANSIENTS STUDIED FOR SOLUTION CRITICAL EXPERIMENTS

Accident	Peak Power (kw)	Total Energy (kw-sec)	Total Fissions	Max. Reactivity Insertion Rate ($/sec)	Max. Reactivity (Dollars)	Minimum Period (m sec)	Time from k = 0.9 to k = 1.0 (sec)	Period at k = 1 (sec)	Time from k = 1 to Prompt (sec)	Period at Prompt Critical (sec)
A	6.54×10^{3}	4.83×10^{2}	1.50×10^{16}	1.19	1.195	25.3	68.75	1.46	1.75	0.091
B	1.37	5.84×10^{-2}	1.81×10^{12}	1.19	1.194	25.4	68.75	1.46	1.75	0.091
C	8.51×10^{2}	4.50	1.40×10^{14}	0.33	1.006	108.5	258.0	4.49	6.27	0.116
D	3.40×10^{-2}	5.48×10^{-3}	1.70×10^{11}	0.33	1.006	108.5	258.0	4.49	6.27	0.116
E	1.57×10^{-1}	1.28×10^{-2}	3.97×10^{11}	0.47	1.090	46.6	17.75	1.74	2.12	0.098
F	1.84×10^{4}	5.04×10^{2}	1.56×10^{16}	0.92	1.340	11.0	36.75	0.73	0.78	0.062
G	1.84×10^{4}	4.69×10^{2}	1.45×10^{16}	0.92	1.340	11.0	36.75	0.73	0.78	0.062
H	2.98×10^{3}	4.97×10^{2}	1.54×10^{16}	0.25	1.081	39.3	137.5	2.57	3.25	0.082
J	1.01	5.31×10^{-2}	1.65×10^{12}	0.25	1.081	39.3	137.5	2.57	3.25	0.082

AEC-GE RICHLAND, WASH.

nearly identical parameters in Table II for cases which are alike except for safety rod disposition. The bursts occur rapidly enough that the safety rod cannot shut down the reactor before the bursts are essentially over. Kinetic Experiments on Water Boilers (KEWB)[12] indicate that a second burst, to be expected from the damped oscillations which follow a prompt critical burst, occurs approximately ten seconds after the first burst. This is sufficient time for the transient pressure to jar open the dump valve and start fuel draining under an effectively increased head.

The assumptions in these calculations have been conservative, in that:

1. Temperature effects have been ignored. The KEWB experiments show that for periods longer than approximately 20 milliseconds, the reactivity compensated at peak power by temperature effects in uranium solution systems is larger than the amount compensated by gas formation.

2. The normal operating levels of the reactors will be approximately 0.1 watt and trip levels will be approximately 1.0 watt. The time available to start the safety rod into the vessel will be correspondingly longer and no prompt critical bursts can occur except for the double failure of the dump valve and the safety rod to perform normally.

3. The maximum possible values of reactivity addition rates have been used.

4. Only the optimum fuel solutions (as defined earlier) have been presented in detail, the remaining solutions present even smaller hazards.

It is concluded that:

1. Excursions of the order of 10^{16} fissions can result from a combination of operator errors and system failures in normal operation. Sabotage is excluded.

2. In the unlikely event of an excursion which is larger in magnitude by a factor of a hundred, personnel operating the system are not subjected to large radiological hazards.

13.2 Nuclear Safety of Plutonium Solution System

All vessels in the system are designed to be critically safe for the plutonium solutions which will be used, with the exception of the reactor vessels.

Both cylindrical vessels and slab tanks of stainless steel are used in the plutonium solution handling system.

The cylindrical storage vessels located in the reactor room are four inches in diameter, 42-inches high, and spaced on two-foot centers to reduce interaction effects. This storage array is also critically safe in the event of flooding or partial flooding.

All slab tanks are 2.5 inches in thickness; these tanks are constructed of 1/4-inch thick stainless steel resulting in outside dimensions of three inches. Under conditions of full water reflection, these tanks would not be safe for all concentrations of plutonium. These tanks are safe, however, for the case of a nominal reflector (a neutron reflector equivalent to one inch or less of water) for the plutonium solutions which will be used in the experiments (concentrations up to ~700 g Pu/l). The nuclear safety of the slab tanks is thus based on having the conditions of a nominal reflector. The safe thickness for an infinite slab with a nominal reflector is 2.5 inches for a concentration of 700 g/l[13]. The methods which have been used to achieve nominal reflection for the various slab tanks are described below.

Dump Tanks

There are two dump tanks, one for each reactor hood. These are located two feet beneath the floor of the reactor hood and shielded by concrete. The dimensions of these tanks are 36 x 24 x 2 1/2 inches. Each tank is covered with 0.03-inch thick cadmium sheet, followed by a thick layer of laminated polyethylene set in concrete.

Waste Hold-up Tank

This tank is located outside the reactor room. It is located four feet beneath the ground level adjacent to the shielding door of the reactor room. This tank will contain only contaminated waste liquids, with plutonium concentrations too small for economic recovery. The purpose of the waste hold-up tank is to prevent the inadvertent transfer of recoverable plutonium to the waste crib. This tank is covered with 0.03-inch thick cadmium sheet, followed by a three-inch thick layer of laminated polyethylene and set in concrete.

Slab Tanks in Mixing Hood

There are three large slab tanks located in the mixing hood. These are the mixing tank (72 x 24 x 2 1/2 inches), the acid tank (150 x 24 x 2 1/2 inches) and the waste storage tank (170 x 24 x 2 1/2 inches). Neutron interaction between adjacent tanks is prevented (the tanks are isolated) by laminated polyethylene; the minimum thickness is eight inches. The surface of the polyethylene facing the tanks is covered with 0.03-inch thick cadmium. The outside thickness of polyethylene as presented to personnel in the mixing room from either side of the hood is six to seven inches, which provides shielding to personnel from neutrons arising from (α, n) reactions and spontaneous fission.

Since these tanks are located outside the reactor room, a further effort was made to insure the conditions of a "nominal" reflector. The waste storage tank and acid storage tank were covered with a two-inch thick layer of Styrofoam (low density material) followed by polyethylene to isolate the tanks from one another. The 0.03-inch thick cadmium sheet is fixed to the polyethylene. In the case of the mixing tank, the cadmium sheet is bonded directly to the tank. The mixing tank is covered with a 1 1/2-inch thick layer of foam glass plus a one-inch thick layer of Styrofoam. Heating coils are provided on the mixing tank. The Styrofoam is essentially a nuclear void, i.e., the safe slab thickness may be increased because of an increase in neutron leakage brought about by the Styrofoam layer. The Styrofoam would have little or no effect on criticality if the tanks were not of finite height.

The design of the tank reflectors (cadmium plus polyethylene) which results in nominal reflection is based on the results of experiments.[14, 15] Criticality data on water-reflected and cadmium wrapped cylinders of U^{235} solutions can be used to show that the effect of cadmium between the reflector and the solution interface is to halve the reflector savings. Similar results have also been obtained from exponential measurements with enriched uranium rods in light water. The effect would be similar for the case of plutonium solutions. The effective extrapolation lengths for plutonium solutions in slab geometry are for thick water reflector, 6.4 cm, nominal reflector, 4.75 cm, and minimal reflector, 3.05 cm.[13]

There is a paucity of data from which to obtain estimates of critical thicknesses of infinite slabs. Data of this kind will be obtained in part of the experimental program for the laboratory.

In view of the uncertainty in the criticality data, a conservative estimate was made for the minimum critical mass of a Pu solution in the 2 1/2 -inch thick mixing tank. Approximately 40 kg of Pu would be required for criticality (including Pu precipitates). This estimate of the critical mass exceeds the full inventory anticipated for any solution experiment by perhaps 50 per cent.

The above conservative estimate was based on a slab tank of three inches thickness, i.e., a three-inch thick layer of Pu solution, plus a nominal reflector. In this "conservative" estimate, the effects of Pu^{240} or nitrate on the criticality were not considered. Both the Pu^{240} and nitrate would increase the critical thickness, and the critical mass.

The 2 1/2-inch thick slab tanks (nominal reflector) are thus considered safe for the solutions which will be used in the experimental program.

13.3 Reactivity Coefficients

Some reactivity coefficients were evaluated for the expected range of experiments in order to establish their order of magnitude. These are summarized in Table III.

TABLE III

REACTIVITY COEFFICIENTS

(H/Pu)	300	250	200	150	100	50
Concentration (g/l)	83.7	100.4	123.8	155	204	340
Temperature Coefficient density effect only $\frac{1}{K}\left(\frac{dK}{dT}\right) \times 10^4$	-1.13	-1.14	-1.2	-1.14	-0.7	
density = constant $\frac{1}{K}\left(\frac{dK}{dT}\right) \times 10^4$	-0.43					-6.8
Density Coefficient $\left(\frac{1}{\rho}\frac{dK}{d\rho}\right) \times 10^4$	-6.0	-5.7	-5.6	-5.6	-5.6	
$\left(\frac{\Delta K}{K}\right) / \left(\frac{\Delta M}{M}\right)$	0.263	0.263	0.254	0.171	0.0211	
Worth of a fuel slug $\left(\frac{\Delta K}{K} \times 10^4\right)$ per g						
Cylinder radius (cm)						
16.51	3.33	5.43	6.36	3.06	0.448	
15.24	3.86	6.29	7.36	3.54	0.519	
13.97	4.47	7.27	8.49	4.09	0.601	

The temperature coefficient due to density changes was evaluated with a one-group perturbation theory[7] and is seen to be large and negative over nearly all the range. At the smaller H/Pu ratios, the reactors can no longer be called properly "thermal" reactors and the model does not accurately represent the reactor. The temperature-density effect, however, would behave in a similar manner as the density coefficient which is seen to be nearly constant. The density coefficient was calculated using 18 energy groups with the 9-Zoom[8] code.

The temperature coefficient at constant density is seen to increase with decreasing H/Pu ratio. This coefficient was calculated by the perturbation method given by Glasstone.[9] The cross sections used to evaluate the expressions were computed with the "sofocate" Code by H. J. Amster.[10] These cross sections are also a part of the 18-group set used with the 9-Zoom Code.

The mass coefficient, $(\Delta K/K)/(\Delta M/M)$, is seen to fall off rapidly with H/Pu ratio below 200. This occurs because the critical mass vs. critical-volume curve is rising very rapidly in this region and the effect of small changes in mass are becoming negligible.

The worth of a small slug of the starting fuel concentrate at the center of the reactors is shown as a function of the vessel size and H/Pu ratio. The starting solution was assumed to contain 500 g/l, $Pu(NO_3)_4$ at a nitric acid molarity of 7. Two methods of weighting were used in the computation 1) a Jo(Kr), one group representation and 2) the power density computation from 9-Zoom multigroup solution was used to define an average flux. The results for the fuel worth were the same.

14. HAZARDS EVALUATION

14.1 Primary Hazards

In the planning and design of this facility, three main hazards to personnel are recognized which are nuclear in origin:

a. Blast effects caused by bursts.

b. Excessive exposures due to burst radiations.

c. Excessive radiation exposure resulting from direct contamination by radioactive materials.

The first two hazards are proportional to the magnitude of a burst.

In solution experiments there is no evidence of blast effects of such magnitude to cause concern for the laboratory integrity in the event of a burst. This hazard is, therefore, not treated here. The direct exposure from a radiation burst is evaluated in Section 14.2.

In considering radiation exposures by radioactive materials, the major source of concern is plutonium. In the event of a burst, the contamination by fission products must also be considered. The contamination hazard due to unirradiated uranium (particularly in solution form) is several orders of magnitude lower than that of the plutonium or fission products and is, therefore, not treated.

The maximum permissible body burden of plutonium is 0.4 microcuries (approximately 1/2 micro-gram). This low body tolerance dictates the need for containment of all plutonium bearing systems at all times. Fission products vary significantly in type and energy of radiation so that hazards are usually discussed in terms of individual fission isotopes. The decay characteristic of fission products, following an approximate 1.2 inverse power law (with time it is assumed that the fission products from plutonium have properties approximately the same as those from U^{235}) gives some basis for less apprehension for contamination from this source than for plutonium. The possibility of radiation exposure from fission products and and plutonium following a burst are evaluated in Section 14.3.

14.2 Estimated Consequences of an Incident in the Critical Mass Laboratory

14.2.1 Maximum Credible Burst

A nuclear burst occurs when a system containing fissionable material becomes prompt critical. The power level of the system increases exponentially at a very rapid rate. Water moderated systems are ultimately self-quenching through expulsion of the moderator. In the case of aqueous solutions, the boiling and radiolytic dissociation of water molecules causes an expansion of the system which terminates the burst.

Theoretical studies of bursts have been made. It is not possible, however, to establish by theoretical means the upper limit of any conceivable burst that might be encountered in this laboratory. These studies must be applied to specific systems and as such cannot anticipate all possible experiments. In addition the accuracy with which one can represent the shutdown mechanisms in these reactors injects some uncertainty into the calculations.

While none of the theoretical bursts examined reached a total of 10^{17} fissions, it is possible to postulate a chain-of-events, however remote, leading to much larger bursts; such bursts are found in the description of accidental bursts at other laboratories.[11] The large energy release in these cases was due either to deliberate large additions of reactivity or a burst of long duration. The design of the laboratory was based, therefore, upon a postulated burst of 3×10^{18} fissions and the consequences of such a burst are taken as those due to a Maximum Credible Burst.

The lack of serious consequences from this burst gives confidence that none of the lesser excursions examined in Section 13.2 will be especially hazardous.

14.2.2 Radiological Hazards (Direct Exposure from the Burst)

Calculations have been performed to evaluate the effectiveness of the radiation shielding of the reactor room. The maximum-credible burst of 3.0×10^{18} fissions was taken as the source, and the total doses in units

of (rad/cm2) received at various distances outside the shield were calculated. The radiation received at the various points was considered to consist of three components:

a) Direct beam gamma radiation coming through the shield,
b) direct beam fast neutrons coming through the shield, and
c) indirect gamma rays going up through the relatively thinner roof and scattering in the air above the building ("skyshine" gammas).

A. Direct Beam Gamma Radiation

For the direct gamma dose calculation, the model given by Rockwell[16] was used. The gamma-ray flux, at a distance, a, from the source, with an intervening wall of thickness, t, is given by:

$$\gamma = \frac{B\, S_o\, e^{-\mu t}}{4\pi a^2}$$

where:

B = build-up factor,
S_o = source strength, whose units determine the units of γ, and B,
μ = attentuation coefficient.

The shield wall is assumed to be five feet thick. The gamma-rays were arbitrarily broken up into four energy groups. The quantities of interest in the calculation are tabulated in Table IV. The dose rates are converted to mrem by a factor, F[17] also tabulated.

TABLE IV

CONSTANTS USED IN DIRECT GAMMA DOSE CALCULATIONS

Energy of Group(MEV)	No. γ's from Burst	μ (Concrete)	B (Concrete)	F (E) $\left(\frac{\text{m rem/hr}}{\text{neut/cm}^2\text{-sec}}\right)$
1	1.276×10^{19}	0.01492	69.3	5.361×10^{-7}
2	5.707×10^{18}	0.1046	16.8	9.028×10^{-7}
4	9.579×10^{17}	0.0745	6.4	1.4722×10^{-6}
6	1.579×10^{17}	0.0630	4.5	1.9722×10^{-6}

The results are tabulated in Table V.

B. Direct Neutron Dose Calculations

The direct neutron dose calculations were quite similar to the direct gamma dose calculations. The differences were:

a) No build-up factor, (B) was used,

b) a total removal cross section (σ_{tr}) was used, and

c) the neutrons were not separated into energy groups because σ_{tr} is a constant over the energy range considered.

The equation relating the dose to the source and the value of σ_{tr} used are:

$$\phi = \frac{S_o e^{-\sigma_{tr} t}}{4\pi a^2}, \text{ and}$$

$$\sigma_{tr} = 0.078 \text{ cm}^{-1}.$$

The value of S_o is taken to be equal to the numbers of fissions (3.0×10^{18}). This value is obtained by considering the neutron balance within the critical reactor. If the ϵ, p, and f are neglected in the four-factor formulae, k_∞ is just equal to η and hence, equal to 2.07. K_∞, however, is actually between 1.5 and 2.0 for the systems considered. If one assumes all excess neutrons to leak out of the assembly, then something less than one neutron per fission may escape. If the systems are reflected, the reflector will act as additional shielding and the estimate is correspondingly more conservative.

C. "Skyshine" Dose Calculations

The "skyshine" gamma dose calculation was based on equations given by Stephenson[18]. For the purpose of simplifying the calculation, the shielding was considered to be cylindrical instead of square, and the reactor was considered to have an effective source strength(S*) which is reduced from the actual source strength (S) by a factor calculated from the attentuation of a collimated gamma beam by the two foot concrete floor. The results are tabulated in Table V.

D. Source and Geometry Assumptions

1. For the direct gamma-dose calculations, the shield was assumed to be an infinite slab of ordinary concrete, and five foot thick. The source was assumed to be a point source, 12 feet from the wall.

2. For the direct neutron dose calculations, the same assumptions as in one above were made.

3. For the "skyshine" gamma-dose, the cell was assumed to be a hollow cylinder 16 foot high with infinitely thick walls (the transmission of the walls having been separately treated).

4. Self-absorption in the source is ignored.

TABLE V

TOTAL DOSES AT VARIOUS DISTANCES FROM OUTER EDGE OF SHIELD RESULTING FROM 3.0×10^{18} FISSIONS

(All Doses Given in Milli-rads/cm^2 Except as Noted)

Distance from Shield (Ft)	From Direct Beam Gammas	From Sky-Shine Gammas	From Direct Beam Neutrons	Total (Milli-rads/cm^2)	Total (Milli-rems/cm^2)
0	5.0	0	170	175	1705
20	10.3	0.53	35.6	46.4	367
40	4.5	8.3	15.4	28.2	150
60	2.5	9.0	8.1	19.6	93
80	1.54	8.6	4.9	15.0	59

14.2.3 Generation of Fission Products

The possible release of radioactive materials from an incident in the critical mass facility has been reviewed in order to obtain an estimate of the possible maximum damage that could result. In order for an escape to occur it is necessary to assume a failure of the containment system at the time of the incident.

The total quantities of fission products generated in a burst of 3×10^{18} fissions were assumed to be the same as for a similar burst in U^{235}. Table VI indicates the quantities as derived from the calculations of Hunter and Ballou.[19]

TABLE VI

FISSION PRODUCTS GENERATED BY BURST

Time Since Event	Fission Products Curies
10 seconds	1.2×10^6
1 minute	3.9×10^5
10 minutes	5.1×10^4
1 hour	8.1×10^3
3 hours	2.4×10^3
10 hours	690
1 day	240
3 days	50
10 days	20

The distribution of isotopes in the lower masses will be different from U^{235} because of the change of the fission yield curve occasioned by the higher mass of the plutonium atom. The quantities of selected biologically important isotopes present within a few minutes after the event are given in Table VII.

TABLE VII

QUANTITIES OF INDIVIDUAL ISOTOPES

Isotope	Quantity Curies	Half-life Days
Sr^{89}	0.2	54
Sr^{90}	0.002	9000
I^{131}	4	8
I^{133}	35	0.9
I^{135}	120	0.3
Cs^{137}	0.003	12000

I^{132} is not included since it has a Te^{132} precursor with a half life of 77 hours. It will therefore build into the residue after the time of the major energy release.

The quantities of noble gases with precursors of half-life less than about one minute were estimated from the fission yields and half lives. Xenon-133 and xenon-135 are not included because of the 22 hour and 6.7 half-life of the iodine parents. The total quantities of noble gases are given in Table VIII.

TABLE VIII

NOBLE GASES

Time Since Incident	Noble Gases (Curies)
1 minute	2×10^4
10 minutes	5×10^3
30 minutes	1×10^3
60 minutes	3×10^2
2 hours	1×10^2
4 hours	40
8 hours	10
16 hours	2

14.2.4 Escape of Fission Products

A review of three critical incidents in homogeneous liquid media give strong evidence that the major portion of the fission products are retained in the solution. For example, in the burst occurring in the Hanford critical tests on November 16, 1951, measurements of the increase in activity of the fuel indicate about 0.36 curies 14 days after a burst of about 8.5×10^{16} fissions[20]. Extrapolation of data from Table VI would indicate an expected content of about 0.35 curies at this time. In the excursions of May, 1954[21], and February, 1956[22] at Oak Ridge, the measurements of quantities of individual isotopes in the fuel gave self-consistent estimates of the total number of fissions and these estimates agreed with estimates from other sources. These data would indicate that the total release was within the error of the measurements, and that little or no fractionation took place, even with chains such as the 140 mass chain which contains a 10 second xenon precursor.

On the other hand, it is probable that there is some escape, since in the May 1954 incident, it was indicated that positive urine samples were obtained from individuals who performed the initial surveys, and in the February 1956 incident, it was indicated that ventilation of the building was performed with the result that the levels were sufficiently low the next day to permit unobstructed access to the test cell. In a recent review of the data on the Borax I destruction excursion, it was noted that the readings downwind at distances of several miles were reasonably consistent with an escape of 5 - 20 per cent of the fission products produced in the burst. Although this was a heterogeneous reactor, the fuel was melted and a steam explosion ejected the debris directly into the atmosphere so that even the benefits of partial containment were not available. There was no indication of alpha emitters from the fuel; however, the sensitivity of the detection procedures was not great.

Data on release of the fuel to the atmosphere in the form of an aerosol are generally lacking. In each of the three incidents reviewed, the fuel was essentially completely recovered, presumably within the accuracy of the accountability, and the main contamination levels from this source appeared to be from splashes. Discussions with the individuals who monitored the building following the Hanford incident, indicated there was little contamination outside of the reactor vessel although the only quantitative statement available was that "the maximum readings were not off-scale on the Juno." Since the Juno has an area of about 3 inch by four inch with a top scale reading of 10^7 d/m, it can be calculated that one gram of plutonium spread uniformly over a 1000 ft^2 area of walls, ceilings, and floors would give a full-scale reading at all locations. This would imply that the quantity which escaped and was subsequently deposited was at least several orders of magnitude below one gram.

From these data it appears unlikely that all of the fission products, or all of the fuel would escape in a form which would be air-borne. The information is not adequate to completely characterize the quantity which would be released in the postulated incident which releases more energy than the bursts which have occurred. It is, therefore, assumed that as much as ten per cent of the gross fission products would escape as gases, vapors, or particles which would become air-borne and escape from the reactor room in the event that the containment was not complete. Because of the lower volatility of the plutonium, and based on the meager experience to date, it is assumed as an upper limit, that one gram would escape the reactor room in the form of air-borne particles of a size which would produce an inhalation hazard downwind.

Consequences

The most probable incident would involve the release of these materials into the closed reactor room with only small leakage into the environs. In this case the shielding required to protect against direct

radiation from the burst is adequate to reduce the quantity of radiation reaching the outside of the reactor room to insignificant amounts. Entry into the room for decontamination will then require a temporary air lock to insure against any residual air-borne material escaping to the remainder of the building. An interlock system is provided to insure that critical experiments may only be conducted when the reactor room is closed (see acceptance test results).

14.2.5 Consideration of Radioactive Hazards to Other Major Facilities

The possibility of contaminating the adjacent area depends on the assumption that fission products and plutonium can escape from the reactor building. This building is designed to withstand pressures up to 4.5 psi; a conservative estimate of the excess pressure resulting from heat generation and radiolytic gas production for a burst of 3×10^{18} fissions is about 4.5 psi. The actual pressure increase can be expected to be less than this. As an example, consider the radiation excursion at Hanford in 1951 with a plutonium solution in a partially filled 20-inch diameter sphere. Although the number of fissions was 8.5×10^{16}, the average temperature increase in the plutonium solution was only about 9 C. The estimate of the total number of fissions based on this temperature change is in qualitative agreement with the total number of fissions as estimated by other methods, which indicates that only a small fraction of energy went into steam production.

For a burst of about 10^{17} fissions, the pressure buildup in the reactor room will be negligible. Therefore, if the reactor building is closed, no appreciable spread of contamination can occur; an interlock system will prevent operation unless the reactor room is closed. If, however, the reactor building were not closed, radioactive contamination could be spread to adjacent areas through escape of fission products.

It is pointed out in Section 14.2.6 of this report that under the most adverse conditions downwind at the location of built-up areas (Purex 3000 feet SE) the gamma ray dosage rates three feet above the ground would be less than one mr per hour at this distance 24 hours after an incident.

In order to get even this dosage rate, the burst would have to be about 20 times larger than any previous accidental burst which has occurred in laboratories of this type, 10 per cent of the gross fissions products and as much as one gram of plutonium would have to become air-borne and escape the closed reactor building; the wind would also have to be in an unfavorable direction (the major component of Purex, Building 202-A, is only downwind of the laboratory about 22 per cent of the time); atmospheric conditions of strong inversion would have to prevail (this is more prevalent at night than in the day when the experiments will normally be conducted).

The leak rate from the reactor room was measured during the acceptance tests of the facility. The room was pressurized to the design pressure of 4.5 psig for six hours. Pressure losses observed (corrected for any temperature variations) indicated a leak rate between 2.5 and 3 volume per cent during the test period of six hours. Such a leak rate is dependent on maintaining the pressure in the room during the time in question. Postulated accidents assume room pressure increase due to a rise in temperature. In this event the pressure will drop relatively rapidly as heat is given up to the walls and internal equipment. It is also possible to use the fire sprinkler system and perhaps the air conditioning unit to rapidly reduce the temperature. A one-inch line with a manual valve located outside the room is available to bleed off pressure from the room through the exhaust system filter.

Thus, it is highly improbable that the amount of leakage from the room would be near the 2.5 - 3.0 per cent observed for a six hour period. The assumption of 10 per cent escape of fission products is thus quite conservative.

It is concluded that the operation of the laboratory will not present any unusual hazard to other major facilities in the area, nor will it result in undue hazards to the operating personnel of the Critical Mass Laboratory.

14.2.6 Biological Consequences

We have chosen to evaluate the conservative case where the material escapes directly to the atmosphere. The probability of a burst occurring with the doors and ventilation vents open is extremely small. Evaluation of the resulting concentrations downwind follows the pattern detailed in an earlier report for the ground level source at the center of the infinite, level plane [23]. It was assumed that the material escaped immediately following the burst with the only decay time that of travel to the point of interest. Calculations were made for three meteorological conditions (strong inversion, moderate inversion, and neutral) and for wind speeds of 1 and 10 mph.

The results of these formal calculations are listed in Table IX for each of the meteorological conditions assumed. Two numbers are given in each column; the first is the estimate at low wind speeds, and the second is the estimate at high wind speeds.

The cloud dose in Table IX was calculated assuming an average gamma energy release of 0.5 Mev per disintegration with correction for cloud size from the curves given by Hurwitz [24]. The dose rate from the ground was calculated assuming a dosage rate of 10 roentgens per hour at a height of three feet above a deposit of one curie per square meter [25] with correction for the non-infinite size of the deposited pattern [24]. The dose in the first hour after arrival of the cloud was obtained by assuming a decay rate given by $T^{-1.2}$ and integrating over the time of interest. The dosage rate to the lungs was calculated from the breathing rate of 20 liters per minute and assumed retention in the lung of 10 per cent of the inhaled material [26], and a $T^{-1.2}$ decay for the fission products and a 65-day half life in the lung for plutonium. The thyroid dose was obtained from the contributions of I^{131}, I^{133}, and I^{135} with 15 per cent of that inhaled deposited immediately in the thyroid. [26]

Discussion

The calculated results given in Table IX can be regarded only as order of magnitude values, with some deliberate bias on the high side. In some cases one would expect a holdup of several minutes before the material is released from the building. A ten minute delay would reduce the cloud dose approaches with low wind speeds and at distances up to a mile with high wind speeds by an order of magnitude. The values in Table IX assume a release as a point source in the atmosphere with only dilution by turbulence. In the incident, the radioactive materials will be dispersed throughout the volume of the room and will then stream out into the atmosphere into a region where turbulence is already higher than over the assumed level plane because of the presence of a built-up area. This will cause concentrations to be lower at the plume center line than those calculated, although the width will be greater. Data are not available to estimate the influence of these factors for the specific location, but could lower the results at close approaches to 10 - 50 per cent of those calculated.

The values given in Table IX are, therefore, believed to be maximum even for the improbable accident chosen for evaluation. Even under these conditions, the concentration downwind at the location of built-up areas (Purex ~3000 feet SW; Power House 3000 feet SE) are low for all except the strong inversion case. For example, it is indicated that gamma dosage rates three feet above the ground will be less than one mr per hour at this distance 24 hours after the incident. Exposures inside buildings should be even lower than those listed because of the increased mixing during intake and the rough filtration of air before entering the building.

The strong inversion case is a special one since the majority of all inversions occur during the nighttime hours. Specific differentiation between the occurrence of various degrees of inversion is not available in the present climatological data, but a strong ground inversion during the day would be a relatively rare event. Since the laboratory will operate normally on a one shift basis, the probability of coincident incidents, failure of containment, and a strong inversion appears to be extremely low.

TABLE IX

CALCULATED RADIATION DOSES ON PLUME CENTER LINE

	Dose from Ground			Inhalation				
				Lung Dose (a)				(b) Cloud width
Distance Feet	Dose from Cloud r	In One Hour r	Rate at 24 Hours mr/hr	FP rads	Pu rem	Thyroid Dose rads	Plutonium Retention μc	0.1 conc. Points Feet
Strong Inversion								
160	60-20	0.2-0.7	3-9	50-20	1200-400	300-100	0.8-0.3	43
330	30-17	0.1-0.5	2-6	30- 8	600-200	200- 50	0.5-0.1	79
660	24-12	0.1-0.2	2-3	20- 3	400- 70	100- 20	0.3-0.05	130
1300	12- 7	0.07-0.1	2-1	12- 1	200- 30	60- 8	0.2-0.02	230
2600	5	0.03-0.006	<1	6- 0.6	120- 15	30- 4	0.08-0.01	390
5300	2	0.01-0.003	<1	3- 0.3	60- 8	20.2	0.04-0.006	700
Moderate Inversion								
160	4-2	0.02-0.08	<1	3-1	70-30	20- 8	0.05-0.02	43
330	2-1	0.01-0.06	<1	2-0.5	40-14	10- 4	0.03-0.01	79
660	1	<0.01-0.03	<1	0.8-0.2	20- 6	5- 2	0.01-0.004	130
1300	0.3-0.5	< 0.01	<1	0.3-0.08	6- 2	2- 0.6	0.004-0.002	230
2600	0.2-0.3	< 0.01	<1	0.2-0.03	4- 0.8	1- 0.2	0.003-<10^{-3}	390
5300	0.06-0.09	< 0.01	<1	0.1-0.02	2- 0.4	0.6- 0.1	0.002-<10^{-3}	700
Neutral								
160	3-0.6	0.02-0.03	<1	2-0.3	40- 7	10- 2	0.03-0.005	66
330	1-0.3	< 0.01-0.03	<1	0.7-0.08	20 -2	5- 0.6	0.01-0.002	120
660	0.4-0.2	< 0.01	<1	0.2-0.03	5- 0.6	1- 0.2	0.004-<10^{-3}	220
1300	0.1-0.08	< 0.01	<1	0.08-0.01	2- 0.2	0.4-0.05	0.001-<10^{-3}	400
2600	0.03-0.04	< 0.01	<1	0.02-<0.01	0.4-0.06	0.1-0.02	<10^{-3}	700
5300	0.006	< 0.01	<1	<0.01	0.1-0.02	0.04-<0.01	<10^{-3}	1300

(a) One-half delivered in first year.
(b) Full cloud width.

15. APPENDIX

15.1 Computation Models

Reactor Model

The reactor model used in these calculations is represented by the equations:

$$\frac{dN}{dt} = \frac{\rho(t) - \beta}{l} N(t) + \sum_{i=1}^{J} \lambda_i \; c_i(t) + S^*(t) \tag{1}$$

$$\frac{dc_i}{dt} + \frac{\beta f_i}{l} N(t) - \lambda_i c_i(t) \tag{2}$$

$$\frac{dT_m}{dt} = E_m [N(t) - N(o)] \tag{3}$$

where:

$N(t)$ = the reactor power at time, t,

c_i = the concentration of the precursor of the ith delayed neutron group,

λ_i = decay constant (sec^{-1}) of the ith delayed neutron group precursor,

$\rho(t)$ = total reactivity at time, t,

β = delayed neutron fraction,

l = neutron lifetime,

f_i = relative yield of each delayed neutron group,

$S^*(t)$ = source term,

T_m = feedback term representing the total fission energy released up to time, t, and

E_m = constant converting total energy released into desired units.

This set of equations is solved for the power as a function of time by Atomics International Reactor Kinetics (AIREK)[17] code on the IBM 709 computer.

Safety Rod

The worth of a safety rod as a function of rod position for a cylindrical vessel is given by[7]:

$$\rho_1 = -\rho_{max} \left\{ 1 - \left[\frac{Z_1(+)}{H+\lambda} - \frac{\sin\left(\frac{2\pi Z_1(t)}{H+\lambda}\right)}{2\pi} \right] \right\}$$

where:

ρ_1 = the reactivity in dollars due to the safety rod,

ρ_{max} = the worth of the fully inserted safety rod in dollars,

$H = H(t)$ = height of reactor solution at time, t, and

$Z_1(t)$ = the position of the rod tip at time, t.

It was also assumed that the above expression was a good approximation for spherical geometry.

The position of the safety rod within the reactor vessel is governed by the simple expression -

$$Z_1(t) = C_1 t + Z(o)$$

where C_1 denotes the withdrawal rate of the rod.

The safety rod is spring loaded at all times during withdrawal from the reactor vessel, i.e., the rod will be given an initial acceleration of ~9 g's by a cocked spring which acts over a distance of four inches. The rod position after the initial four inches of travel will then be treated as a free falling body with some initial velocity. Because of a computational limitation in the rod subroutines, if the rod has not been completely withdrawn at the time of rod scram, the rod is treated simply as a free-falling body.

Changes in Geometric Buckling

Changes in reactivity due to variations in reactor dimensions, solution height in the case of cylinders and reactor radius in the case of spheres, are calculated by the familiar expression -

$$k_{eff} = \frac{k_\infty e^{-B_g^2 \tau}}{1 + B_g^2 L^2}$$

The partially filled spheres were taken to be completely filled spheres having volumes equal to the partially filled spheres. The values for k_∞, τ, and L^2 in the above expression were obtained by calculating k_{eff} as a function of geometrical buckling with the 9-Zoom code. Since L^2 is small (of order 0.5 cm^2 or less) for the solutions considered, a value of k_∞ and τ were obtained by fitting the 9-Zoom results with the expression:

$$\ln [k_{eff} (1 + L^2 B_g^2)] = B_g^2 \tau + \ln k_\infty$$

The variation of the geometrical bucklings upon the addition of fuel solution is expressed as:

$$B_g (t) = \frac{\pi^2}{(R_o + \lambda + At)^2} \text{ for spheres, and}$$

$$B_g (t) = \left[\frac{2.4048}{R_o + \lambda}\right]^2 + \frac{\pi^2}{(H_o + 2\lambda + At)} \text{ for cylinder;}$$

the quantity A is the rate at which the reactor dimensions are being varied.

Bubble Formation Due to Radiolytic Dissociation

In the KEWB system[28] two quenching mechanisms seem to be dominant over a wide range of excursions. The first of these is the rise in neutron temperature and the thermal expansion as the core temperature rises. The temperature coefficient was taken to be zero for the excursion studied in this paper; this will result in an over estimate of the magnitude of the excursions since the coefficient is negative (Table III, Section 13.1). The second quenching mechanism is that of bubble formation.

Even though a physical basis for the following model used in computing the bubble growth efficient has not been established, it has been found to give good results for a wide range of KEWB data.[28]

$$K(t) = K_o + \frac{\partial K}{\partial V} \Delta V$$

where $\frac{\partial K}{\partial V} = -0.005$ dollars/cm^3 is the void volume coefficient of reactivity, K_o is the reactivity in dollars of the system at time, t = 0, and K(t) is the reactivity in dollars of the system at time, t. The production of the void space is given by

$$\frac{dV}{dt} = \epsilon N(t) \cdot E(t)$$

where N(t) is the instantaneous power, E(t) is the fission energy generated to time, t, and ϵ was taken to be 500 cm^3/(megawatt-sec)^2.

Neutron Lifetime

The neutron lifetime (l) also varies as a function of bubble formation and geometric buckling

$$l = \frac{l_o e^{Bg^2(t)\tau}}{k_\infty}$$

where l_o is the infinite medium lifetime. The effective source term is given by

$$S^*(t) = S^*(o)\, l/l_o$$

where

$$S^*(o) = -\rho(o)N(o)$$

15.2 Site Characteristics**

Geology

The site, located in the central part of the 200-E Area, lies on an old river bench or plateau occupied by the Separations Areas in the west-central part of the Hanford reservation. It is about eight miles from the Columbia River both to the northwest and to the northeast. Figure 3 shows the location of the Critical Mass Laboratory relative to the other major facilities in the 200-E Area. Locally a thin layer of eolian-deposited silt supports scanty vegetation consisting largely of sagebrush, Russian thistle

** Contributed by R. E. Brown, Chemical Effluents Technology

and thin desert grasses. Elsewhere largely barren, post-glacial (recent) fluviatile sandy gravels form the landscape. The high permeability of these coarse deposits precludes the concentration of runoff; precipitation falling on the ground is rapidly absorbed. These unconsolidated, highly heterogeneous, generally poorly bedded and generally highly porous and permeable coarse sands and granule to boulder gravels extend downward for nearly 300 feet.

Beneath the recent fluviatile deposits are the locally semi-consolidated clays, silts, sands and gravels of the lowermost part of the Pleistocene Ringold formation. This formation in the site is about 50 feet thick, and directly overlies the basalt bedrock of the Columbia River basalt series that extends to a depth of more than 10,000 feet.

The ground water table lies close to the irregularly eroded upper surface of the Ringold formation at a depth of about 300 feet. Locally the water table lies within the low-permeability Ringold sediments, elsewhere it lies within the highly permeable fluviatile gravels.

Hydrology

The ground water beneath the project moves generally from the hills west and southwest of the Hanford reservation beneath the project area and ultimately into the Columbia River, with an average gradient between five and ten feet per mile. The gradient and consequently the rate of travel of the ground waters to the Columbia River differ according to the path followed. An average travel time of the ground waters of about 180 years was calculated from the proposed site of the facility to the Columbia River for conditions as represented early in 1959. Ground water conditions, significantly different from those on which the calculations were based, could materially alter the path and travel time of ground waters to the Columbia River. This could result from a regionally higher ground water table or by a lower ground water mound than that which then existed beneath 200-E Area. The mound in part diverts ground waters from beneath the facility site through the less permeable Ringold sediments and/or into longer paths of travel than would occur were the mound lower or non-existent.

The hydrologic conditions at the site vicinity are such that through June 1960, nearly 8 x 10^9 liters of significantly radioactive wastes containing more than 1,396,000 curies of mixed fission products were safely discharged to ground nearby. No significant concentrations of these radioisotopes are known or suspected of having reached the Columbia River.

Seismology

The Hanford reservation is in a region prone to earthquakes on the threshold of moderate structural damage. The paucity of records, however, largely precludes the use of historical data to substantiate this. Recent studies by University of Washington seismologists indicate that the Hanford area lies in zones ranging from 0 - 3. Zone 3 implies the possibility of earthquakes of intensity MM7. The range of zones acknowledges the now-recognized important differences in the geologic formations at Hanford and their response to earthquakes. The recent fluviatile gravels, because of their unconsolidated state, are those materials on which structural damage would probably be greatest in the event of a significant earthquake at Hanford. If an earthquake emits waves of periods corresponding to the natural periods of vibration of these sediments, amplification by resonance can occur, with resulting greater ground motion than otherwise. However, structures can be designed to minimize damage by avoiding the natural vibration periods of the foundation materials, thus reducing resonance in the structure themselves.

Regional geologic studies by members of Chemical Effluents Technology Operation have confirmed that the geologic formations in the region are probably undergoing uplift and folding today. This indicates that seismic activity is more likely in the area than if the region were shown to be stable. Numerous landslides throughout the entire region suggest that earthquakes have occurred. Such slides may not be related to earthquakes, but they often are triggered by such earthquakes and can be considered as field evidence.

Meteorology

Records of the meteorology in the area are available from the 420 foot tower and associated instruments located about five miles to the west of the proposed laboratory site. Since both installations are on a plateau the statistical results from the meteorological tower should be reasonably representative of the proposed site.

Table X indicates the frequency of stable, neutral, and unstable lapse rates as measured between 3 feet and 200 feet and based on hourly observations for the years 1951 - 1953.

TABLE X

FREQUENCY OF OCCURRENCE OF STABLE, NEUTRAL, AND UNSTABLE LAPSE RATES

$T = (T_{200} - T_3)\ ^\circ F$

Lapse Rate	Per Cent of Time				
	Spring	Summer	Fall	Winter	Year
Stable $T>-0.5$	45	38	57	57	49
Neutral $-1.2<T<-0.5$	8	8	10	15	10
Unstable $T<-1.2$	47	54	33	28	41

The joint frequencies of wind speed at the 200 foot level and the temperature lapse rate are given in Table XI. There appears to be no great preference for stable conditions at any wind speed since the probability of occurrence is about the same for speeds of 0-4, 5-9, 10-14, and >15 mph.

The joint frequencies of wind speed and direction are given for the year in Table XII. The Purex Canyon, Building 202-A, is approximately SSE of the proposed location; it would be downwind of the laboratory about 22 per cent of the time. The power house and administration area, SSW of

TABLE XI

JOINT FREQUENCY OF WINDSPEED AT 200 FEET AND TEMPERATURE LAPSE RATE

Wind Speed (mph)	0 - 4			5 - 9			10 - 14			15 - 19			20		
Stability*	S	N	U	S	N	U	S	N	U	S	N	U	S	N	U
Winter	16.5	6.0	12.0	15.7	2.6	7.1	12.5	2.6	5.4	6.2	1.7	1.7	5.7	2.1	2.2
Spring	7.5	1.4	9.4	11.6	1.2	14.5	13.6	1.5	9.1	8.0	1.8	5.6	4.6	2.4	7.8
Summer	3.7	0.9	11.6	8.8	1.0	21.2	12.7	1.2	10.6	8.5	1.8	4.7	4.4	3.0	5.9
Fall	16.2	4.0	14.7	16.8	1.5	9.2	14.1	1.5	4.4	6.9	1.2	2.5	2.7	1.4	2.9
Year	10.9	3.1	11.9	13.2	1.6	13.0	13.2	1.7	7.5	7.4	1.6	3.7	4.3	2.2	4.7

* S = Stable, N = Neutral, U = Unstable.

TABLE XII

JOINT FREQUENCY DISTRIBUTION OF WINDSPEED AND WIND DIRECTION AT THE 200 FOOT LEVEL

Wind From	Hourly Average Wind Speed (mph)					
	0-4	5-9	10-14	15-19	20	Total
	Per Cent of Time					
NNE	1.27	1.01	0.71	0.19	0.09	3.27
NE	1.58	0.92	0.46	0.16	0.10	3.22
ENE	1.17	0.61	0.21	0.07	0.02	2.08
E	1.65	0.67	0.16	0.03	0.00	2.51
ESE	2.02	0.73	0.13	0.03	0.00	2.91
SE	1.60	0.95	0.26	0.06	0.03	2.90
SSE	1.00	0.92	0.46	0.25	0.12	2.75
S	1.10	1.12	0.41	0.20	0.21	3.04
SSW	0.82	1.07	0.69	0.60	0.89	4.07
SW	0.84	1.50	1.51	1.13	2.08	7.06
WSW	0.87	1.74	1.87	1.63	1.24	7.35
W	1.21	2.36	2.38	0.88	0.45	7.28
WNW	1.33	3.83	5.45	3.82	2.38	16.81
NW	2.06	5.17	5.78	3.12	3.56	19.69
NNW	2.33	2.72	1.15	0.39	0.21	6.80
N	2.24	2.01	0.67	0.19	0.03	5.14
Var.	1.30	0.40	0.00	0.00	0.00	1.70
Calm	--	--	--	--	--	1.46
Total	24.39	27.73	22.30	12.75	11.41	

TABLE XIII

WIND DIRECTION FREQUENCIES DURING ALL HOURS AND HOURS OF PRECIPITATION

(1950 - 1955)

Wind Direction	All Hours	Precipitation Hours
N	5.2	3.5
NNE	3.3	1.9
NE	3.2	2.4
ENE	2.1	1.5
E	2.5	2.5
ESE	2.9	2.9
SE	2.9	4.3
SSE	2.8	2.6
S	3.0	4.3
SSW	4.1	4.3
SW	7.1	5.8
WSW	7.3	4.5
W	7.3	6.3
WNW	16.8	16.7
NW	19.7	20.9
NNW	6.8	6.8
Variable	1.7	0
Calm	1.5	8.9

the laboratory, would be downwind about 3 per cent of the time. Operations in the critical mass facility which could conceivably give rise to a burst would exist on the average of only two hours a day. The critical mass laboratory will normally be operated on a five-day basis; thus, combined conditions which could bring any contamination to the Purex Canyon building would exist at the maximum only 1.3 per cent of the Purex operating time as based on a seven-day week.

Precipitation is observed during about 6.9 per cent of the hours of the year. Table XIII compares the frequencies of wind directions during all hours and during hours of precipitation.

ACKNOWLEDGEMENTS

The authors acknowledge with thanks the help of B. C. Clark in running the kinetics problems, and the secretarial staff of Nuclear Physics Research group; Kay Browning, Betty Soper, Rachel Miller, and Doris Larson for their many hours of typing on this document.

REFERENCES

1. Berberet, J. A., J. W. Healy, and E. D. Clayton. Preliminary Hazards Study of the Hanford Plutonium Critical Mass Laboratory, HW-57603. September 30, 1958.

2. Kruesi, F. E., J. O. Erkman, and D. D. Lanning. Critical Mass Studies of Plutonium Solutions, HW-24514. May 19, 1952.

3. Goertzel, G. "Miminum Critical Mass and Flat Flux," Journal of Nuclear Energy, 2: 193. 1956.

4. USAEC Accident and Fire Prevention Information Pamphlet, Issue 104. Recommended Minimum Specifications for Fire Resistive High Efficiency Particulate Air Filters. December 11, 1959.

5. Hurst, G. S. and R. H. Ritchie. Radiation Accidents; Dosimetric Aspects of Neutron and Gamma-Ray Exposure, ORNL-2748.

6. Manual of Radiation Protection Standards, HW-25457. August 1, 1952.

7. Murray, R. L. Nuclear Reactor Physics, Prentice Hall, Inc.,

8. Stone, E. P., et al. 9-Zoom - A One-Dimensional, Multigroup, Neutron Diffusion Theory Reactor Code for the IBM-709, UCRL-5682. August 25, 1959.

9. Glasstone and Edlund. The Elements of Nuclear Reactor Theory, D. Van Nostrand Company, Inc., New York.

10. Amster, H. J. A Compendium of Thermal Neutron Cross Sections Averaged Over the Spectra of Wigner and Wilkins, WAPD-185. January, 1958.

11. Union Carbide Nuclear Company. Accidental Radiation Excursion at the Y-12 Plant, June 16, 1958 - Final Report, Y-1234. July 28, 1958.

12. Annual Technical Progress Report, AEC Unclassified Programs, FY-1959, NAA-SR-3850. August 1, 1959.

13. Woltz, F. E., et al. Nuclear Safety Guide - Rev. I, TID-7016.

14. Fox, J. K., et al. Critical Mass Studies, Part IX, Aqueous U^{235} Solutions, ORNL-2367. March 4, 1958.

15. Clayton, E. D. "Water Moderated Lattices with Enriched Uranium Rods," Nuclear Physics Research Quarterly Report, October, November, December, 1955, HW-42182: 40. March 22, 1956. (CONFIDENTIAL)

16. Rockwell, Theodore. Reactor Shielding Design Manual, TID-7004.

17. Reactor Physics Constants, ANL-5800. Undated

18. Stepenson, Richard. Introduction to Nuclear Engineering, McGraw-Hill Company, Inc., New York, 210-217.

19. Hunter, H. F. and N. E. Ballon. Nucleonics 9, 5C2-C7. November, 1951.

20. Leonard, B. R. A Study of the Radiation Burst in the Hanford Homogeneous Reactor, HW-24327. May 2, 1952.

21. Callihan, D. The Radiation Excursion of May 26, 1954 - A Preliminary Report, CF-56-6-40. June 8, 1954.

22. Callihan, D. Radiation Incident of Febraury 1, 1956 - A Preliminary Report, CF-56-2-105. Febraury 15, 1956.

23. Healy, J. W. Calculations of Environmental Consequences of Reactor Accidents, HW-54128. December 11, 1957.

24. Fitzgerald, J. J., H. Hurwitz, and T. Tonks. Safeguard Analysis of the Proof Test Reactor, Supplement 1 - Fission Dispersal Analysis

25. USAEC. The Effects of Atomic Weapons. June, 1957.

26. Recommendations of the International Commission on Radiological Protection, B. R. Journal Radiation Supplement, No. 6. 1955.

27. Schwartz, A. Generalized Reactor Kinetics Code, NAA-SR-MEMO-3509.

28. Stratton, W. R. A Review of Criticality Accidents. To be published.

INTERNAL DISTRIBUTION

Copy Number	
1	R. E. Brown
2	C. L. Brown
3	W. G. Browne
4	M. H. Campbell
5	J. L. Carter
6	B. C. Clark
7 - 56	E. D. Clayton
57	V. R. Cooper
58	H. W. Crocker
59	F. G. Dawson
60	J. E. Faulkner
61	G. C. Fullmer
62	P. F. Gast - H. M. Parker
63	R. G. Geier
64	O. H. Greager
65	G. L. Gurwell
66	K. M. Harmon
67	M. K. Harmon
68	R. A. Harvey
69	J. W. Healy
70	R. E. Heineman
71	H. L. Henry
72	O. F. Hill
73	C. R. Richey
74	H. H. Hopkins
75	D. S. Jackson
76	B. L. Jones
77	A. R. Keene
78	C. E. King
79	L. M. Knights
80	B. R. Leonard
81	R. C. Lloyd
82	W. K. MacCready
83	R. H. Masterson
84	C. Metelmann
85	J. H. Miller
86	H. A. Moulthrop
87	V I. Neeley
88	P. F. Nichols
89	R. Nilson
90	R. S. Paul
91	H. F. Peterson
92	R. E. Peterson
93	A. M. Platt
94	T. J. Powell
95	W. A. Reardon
96	J. J. Regimbal

INTERNAL DISTRIBUTION (contd.)

Copy Number	
97	R. A. Schneider
98	R. B. Smith
99	S. G. Smolen
100	R. L. Stevenson
101	E. W. Sutherland
102	J. R. Triplett
103	C. M. Unruh
104	J. K. Waite
105	A. J. Waligura
106	O. J. Wick
107	300 Files
108	Record Center
109 - 113	Extra
114 - 117	G. E. Technical Data Center, Schenectady

EXTERNAL DISTRIBUTION

Number of Copies	
3	Aberdeen Proving Ground
1	Aerojet-General Corporation
1	Aerojet-General, San Ramon (IOO-880)
2	AFPR, Boeing, Seattle
3	AFPR, Lockheed, Marietta
2	Air Force Special Weapons Center
2	ANP Project Office, Convair, Fort Worth
1	Albuquerque Operations Office
1	Alco Products, Inc.
1	Allis-Chalmers Manufacturing Company
10	Argonne National Laboratory
1	Army Ballistic Missile Agency
1	Army Signal Research and Development Laboratory
1	AEC Scientific Representative, Japan
3	Atomic Energy Commission, Washington
3	Atomics International
2	Babcock and Wilcox Company (NYOO-1940)
2	Battelle Memorial Institute
1	Bettis Plant
4	Brookhaven National Laboratory
1	Brush Beryllium Company
1	Bureau of Medicine and Surgery
1	Bureau of Ships (Code 1500)
1	Bureau of Yards and Docks
3	Chicago Operations Office
1	Chicago Patent Group

EXTERNAL DISTRIBUTION (contd.)

Number of Copies	
1	Combustion Engineering, Inc.
1	Convair-General Dynamics Corporation, San Diego
3	Defence Research Member
2	Department of the Army, G-2
1	Dow Chemical Company (Rocky Flats)
3	duPont Company, Aiken
1	duPont Company, Wilmington
1	Edgerton, Germeshausen and Grier, Inc., Las Vegas
1	Frankford Arsenal
1	General Atomic Division
2	General Electric Company (ANPD)
1	General Nuclear Engineering Corporation
2	Goodyear Atomic Corporation
1	Iowa State University
2	Knolls Atomic Power Laboratory
2	Los Alamos Scientific Laboratory
1	M & C Nuclear, Inc.
1	Mallinckrodt Chemical Works
1	Maritime Administration
1	Martin Company
1	Massachusetts Institute of Technology (Hardy)
1	Mound Laboratory
1	National Aeronautics and Space Administration, Cleveland
1	National Bureau of Standards
1	National Lead Company of Ohio
3	Naval Research Laboratory
1	New Brunswick Area Office
2	New York Operations Office
1	Nuclear Development Corporation of America
1	Nuclear Metals, Inc.
1	Oak Ridge Institute of Nuclear Studies
10	Office of Naval Research
1	Office of Naval Research (Code 422)
1	Office of Ordnance Research
1	Office of the Chief of Naval Operations
1	Olin Mathieson Chemical Corporation
1	Ordnance Materials Research Office
1	Patent Branch, Washington
2	Phillips Petroleum Company (NRTS)
1	Power Reactor Development Company
3	Pratt and Whitney Aircraft Division
2	Public Health Service
1	Rensselaer Polytechnic Institute
1	Sandia Corporation, Albuquerque
1	Schenectady Naval Reactors Operations Office

EXTERNAL DISTRIBUTION (contd.)

Number of Copies	
1	Sylvania Electric Products, Inc.
2	Union Carbide Nuclear Company (ORGDP)
5	Union Carbide Nuclear Company (ORNL)
1	Union Carbide Nuclear Company (Paducah Plant)
1	USAF Project RAND
1	U. S. Geological Survey, Denver
1	U. S. Naval Postgraduate School
1	U. S. Patent Office
2	University of California, Berkeley
2	University of California, Livermore
1	University of Puerto Rico
1	University of Rochester (Marshak)
1	Watertown Arsenal
1	Westinghouse Electric Corporation (Schafer)
1	Yankee Atomic Electric Company
325	Technical Information Service Extension
75	Office of Technical Services, Washington