AR TARGET SHEET

The following document was too large to scan as one unit, therefore, it has been broken down into sections.

EDMC#:	0061511
SECTION:	5 OF 5
DOCUMENT #:	RPP-13774, Rev 002
TITLE:	SST System Closure Plan

Appendix 4A

Figures and Drawings

This page intentionally left blank.

1 **Figure 4A-1 WTP Simplified Flow Diagram**

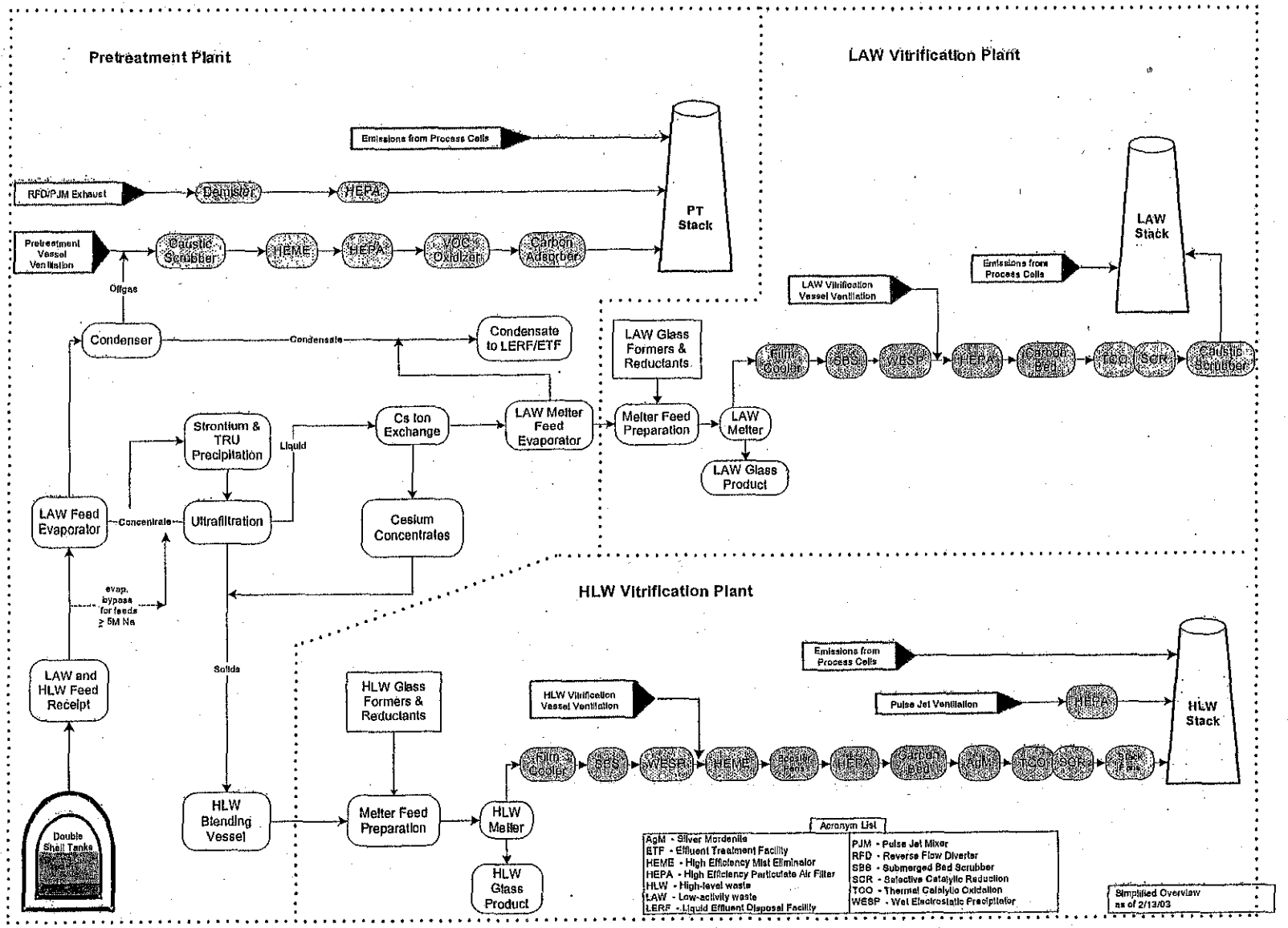

2

Figure 4A-2 Primary Pretreatment Process Systems

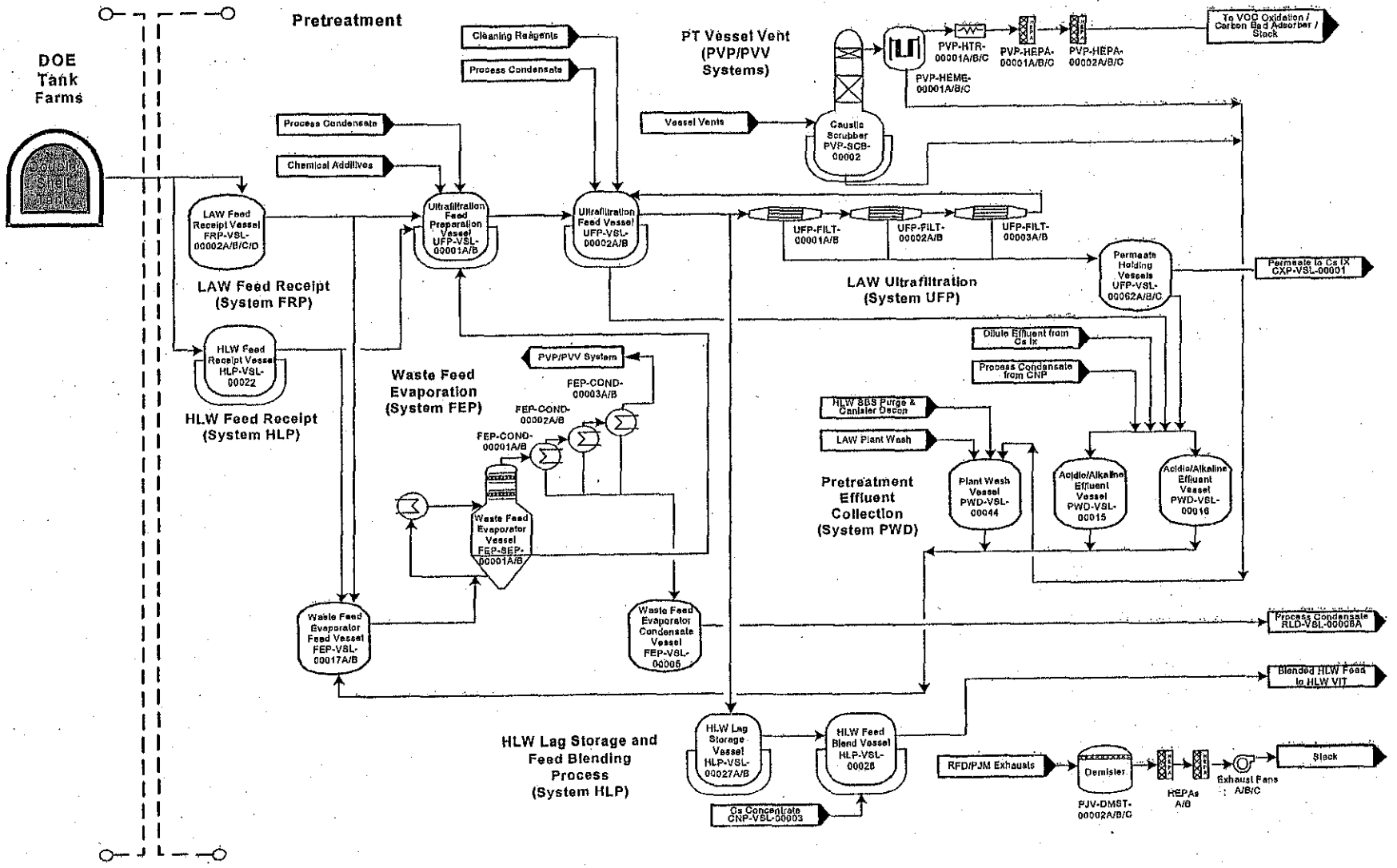

1 **Figure 4A-02A** **Primary Pretreatment Process Systems (Continued)**

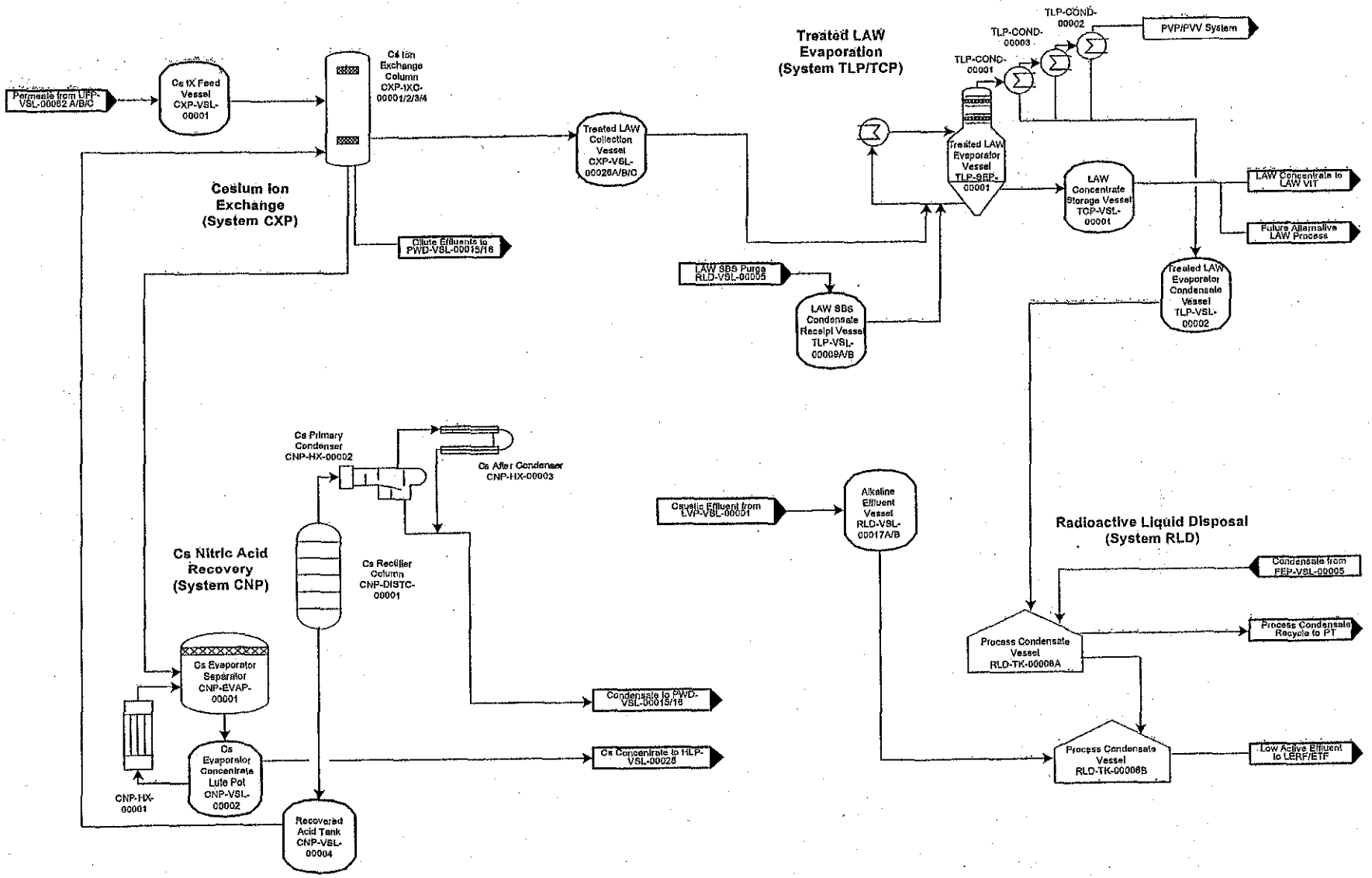

2
3
4

Figure 4A-3 Primary LAW Vitrification Systems

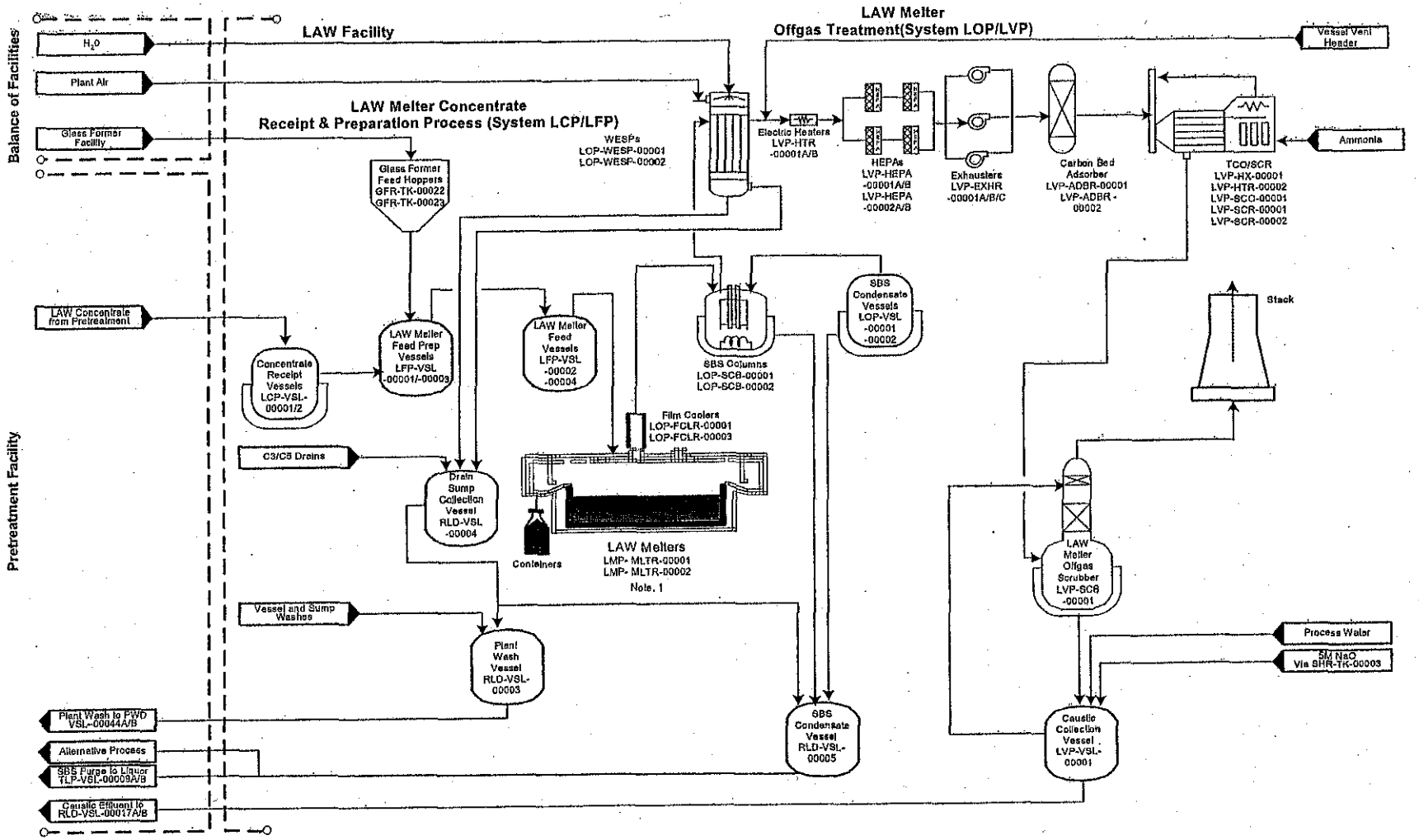

Notes:
1. For this diagram one melter system is shown but assumes a total of two LAW melter systems of identical capacity.

Figure 4A-4 Primary HLW Vitrification Systems

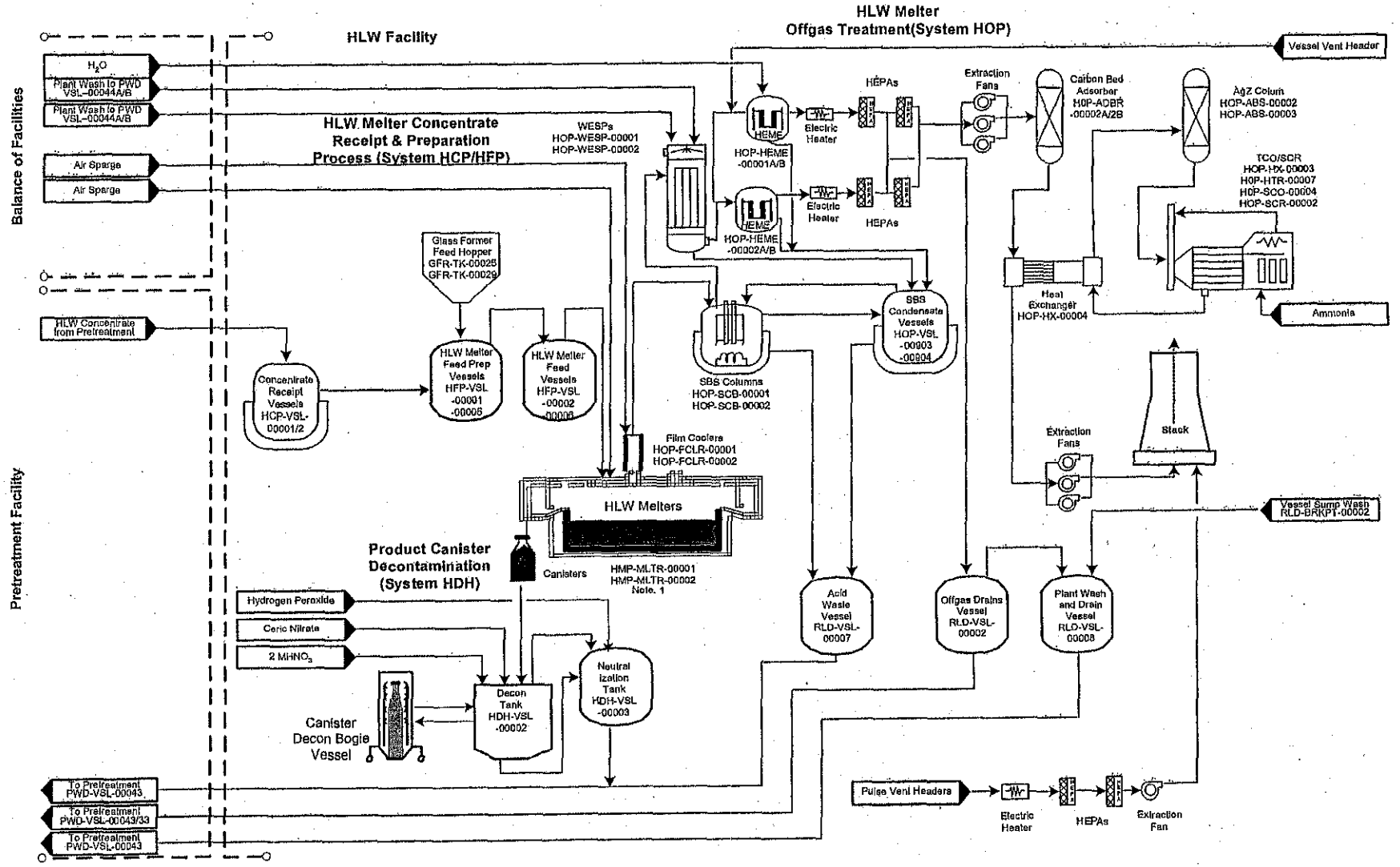

Notes:
1. For this diagram one melter system is shown but assumes a total of two HLW melter systems of identical capacity.

Figure 4A-5 Waste Feed Receipt Process System (FRP)

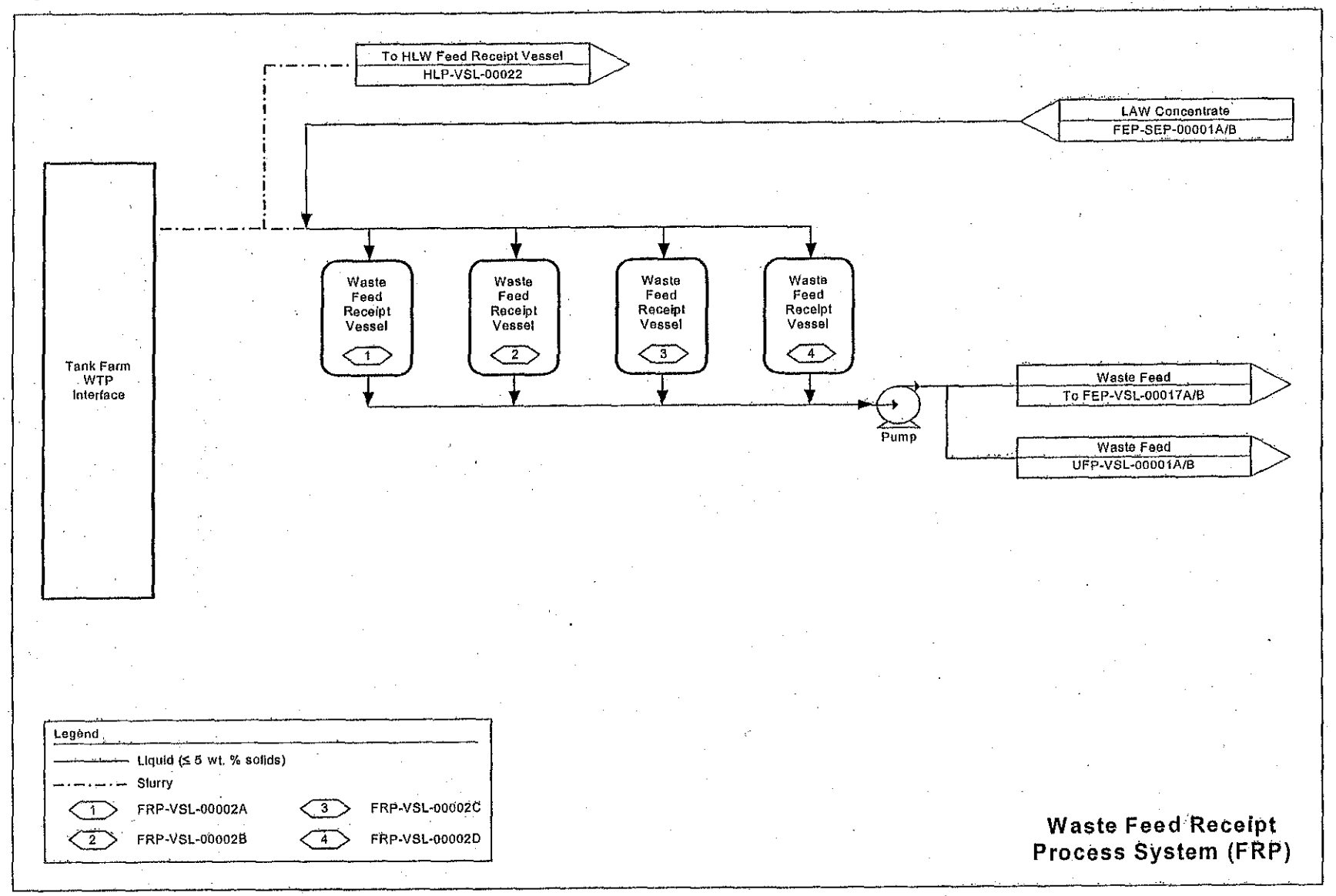

Figure 4A-6 Waste Feed Evaporation Process System (FEP)

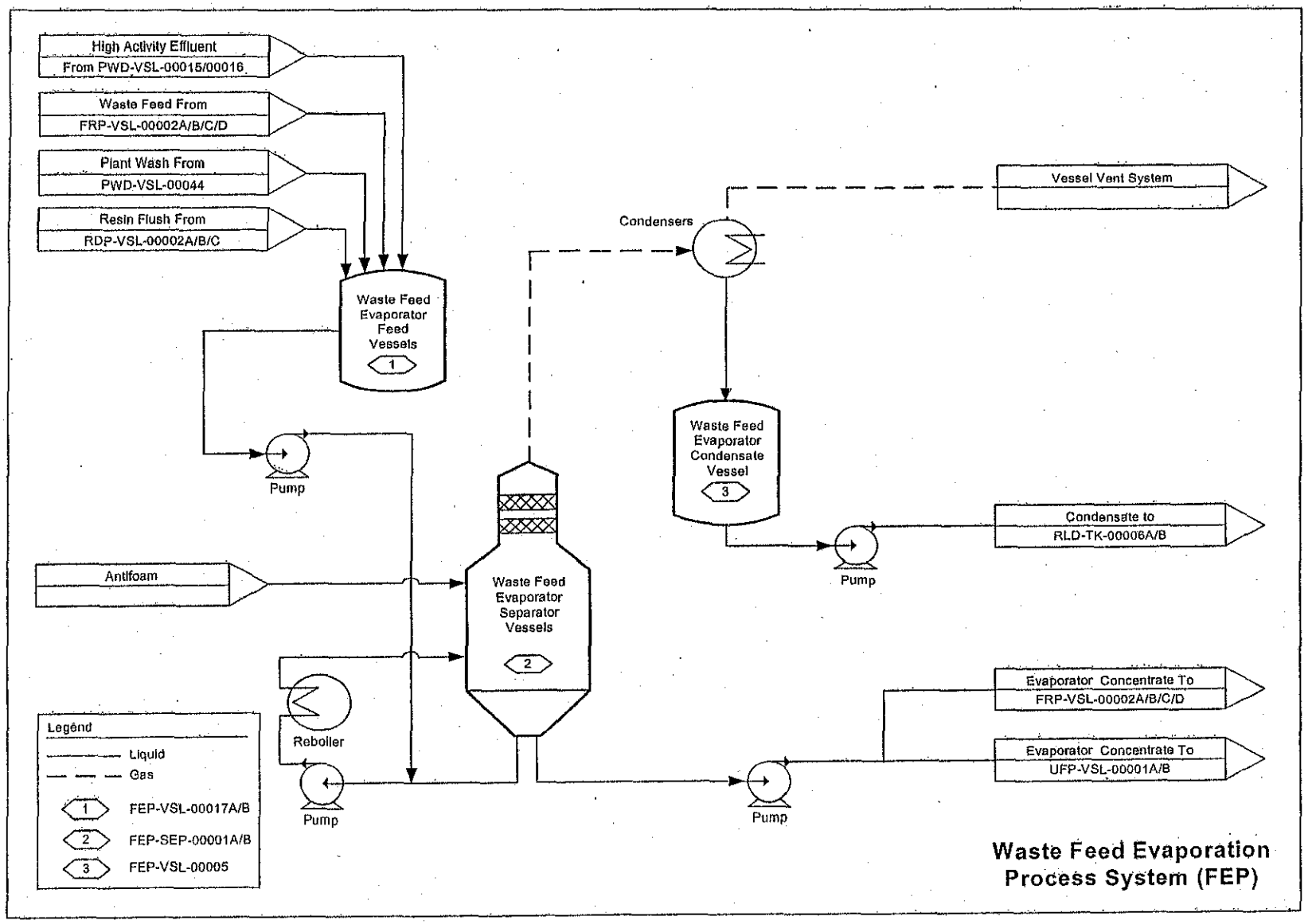

Figure 4A-7 Ultrafiltration Process System (UFP)

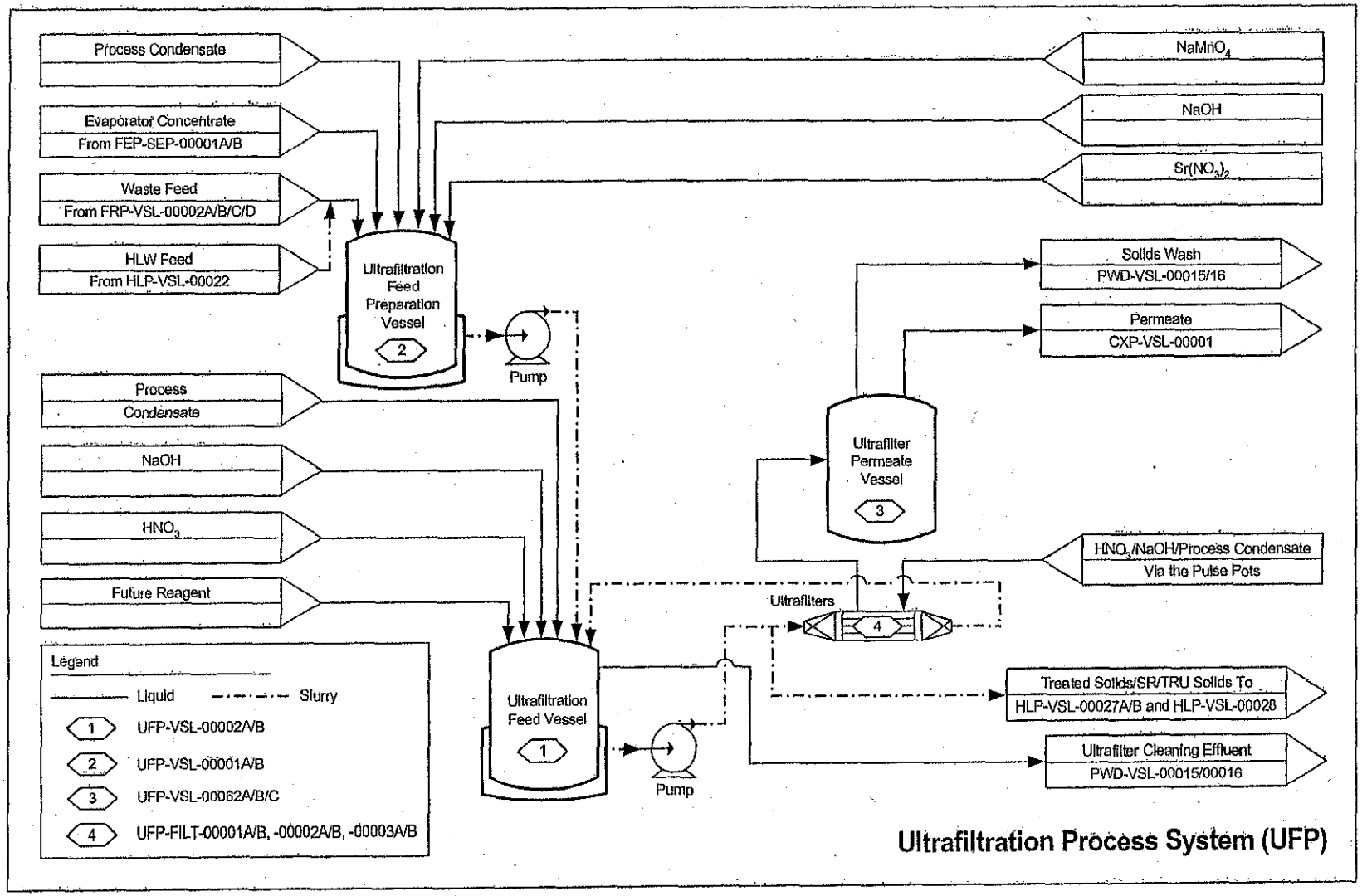

Figure 4A-8 HLW Lag Storage and Feed Blending Process System (HLP)

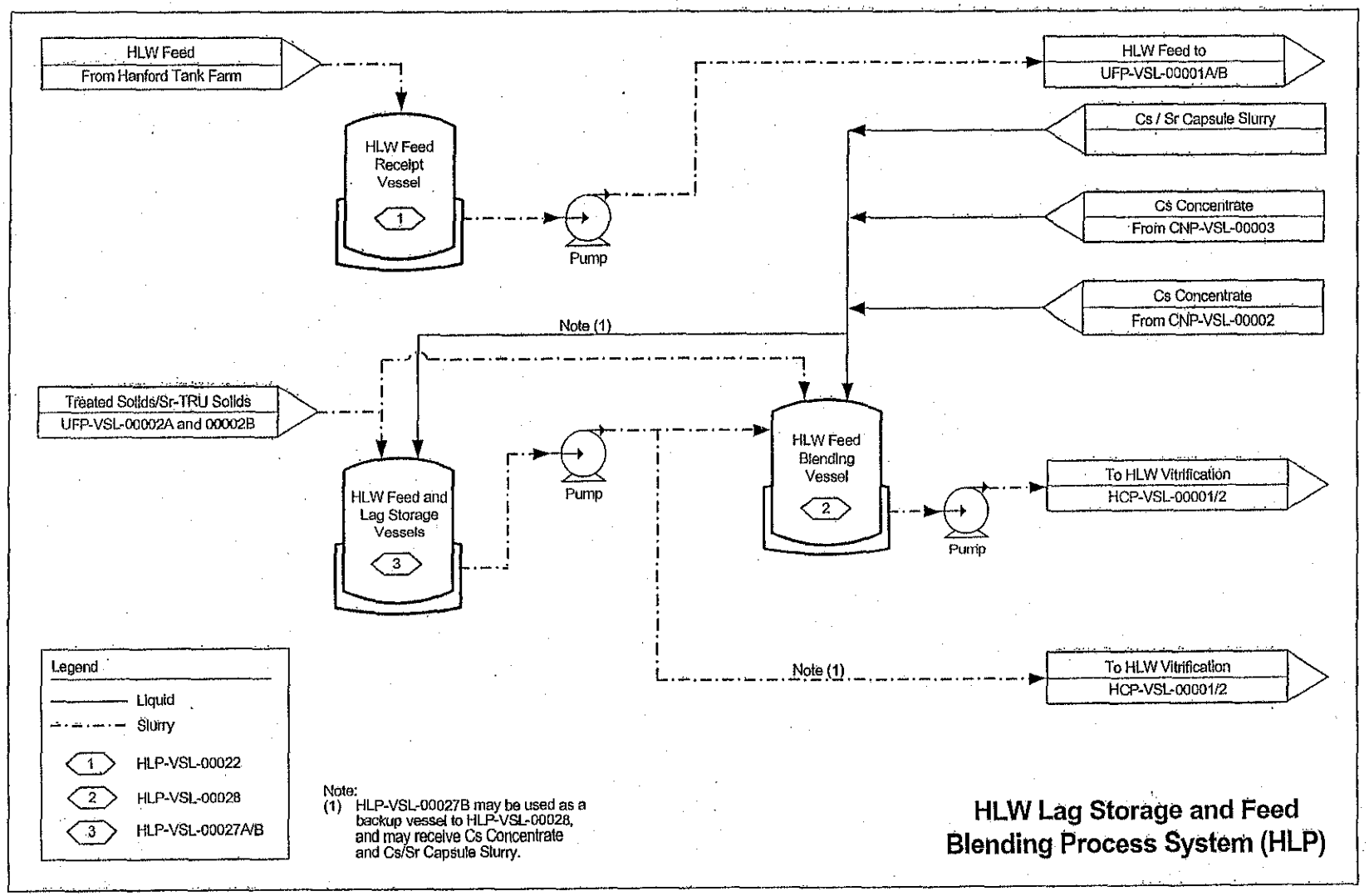

Figure 4A-9 Cesium Ion Exchange Process System (CXP)

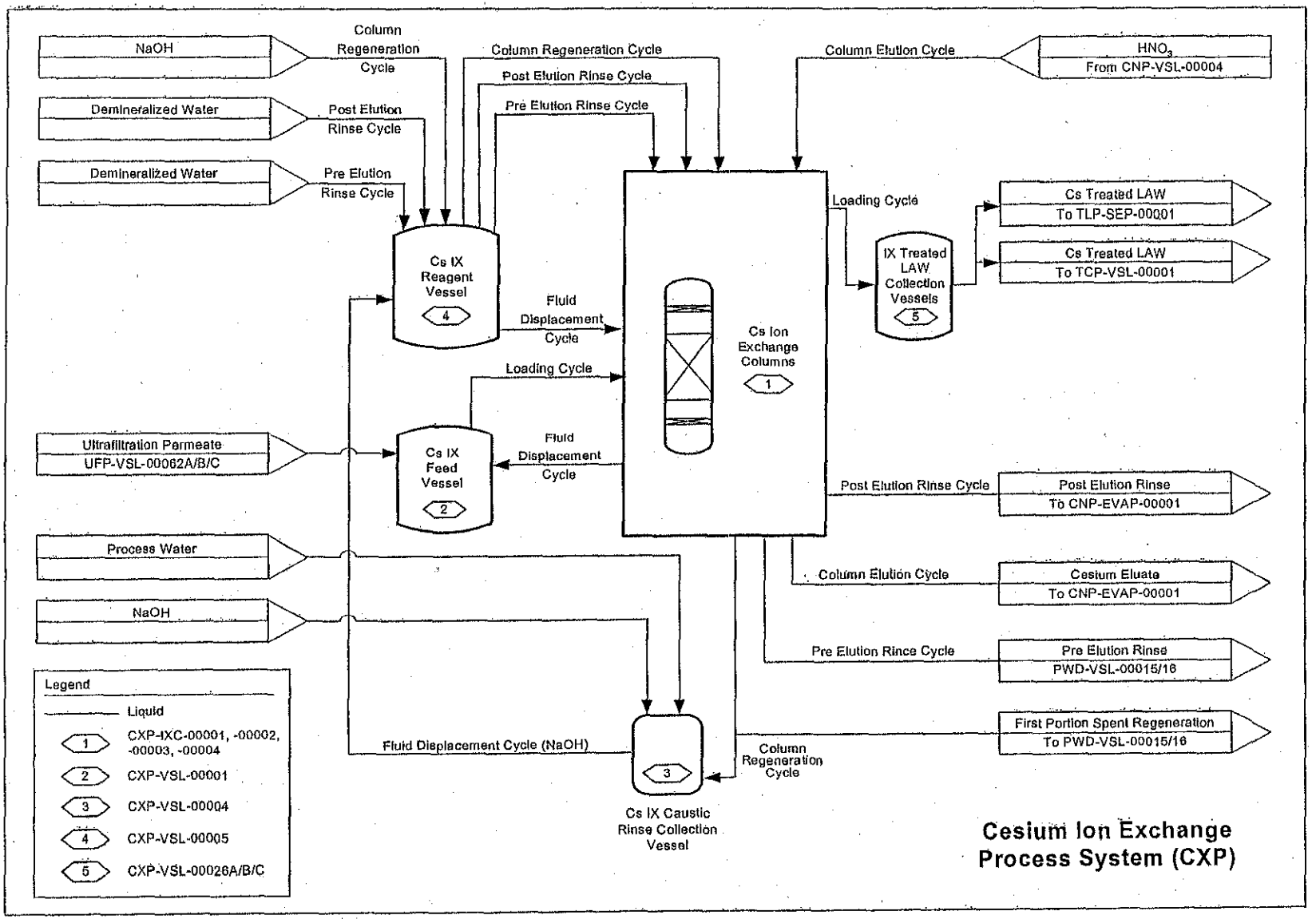

Figure 4A-10 Cesium Nitric Acid Recovery Process System (CNP)

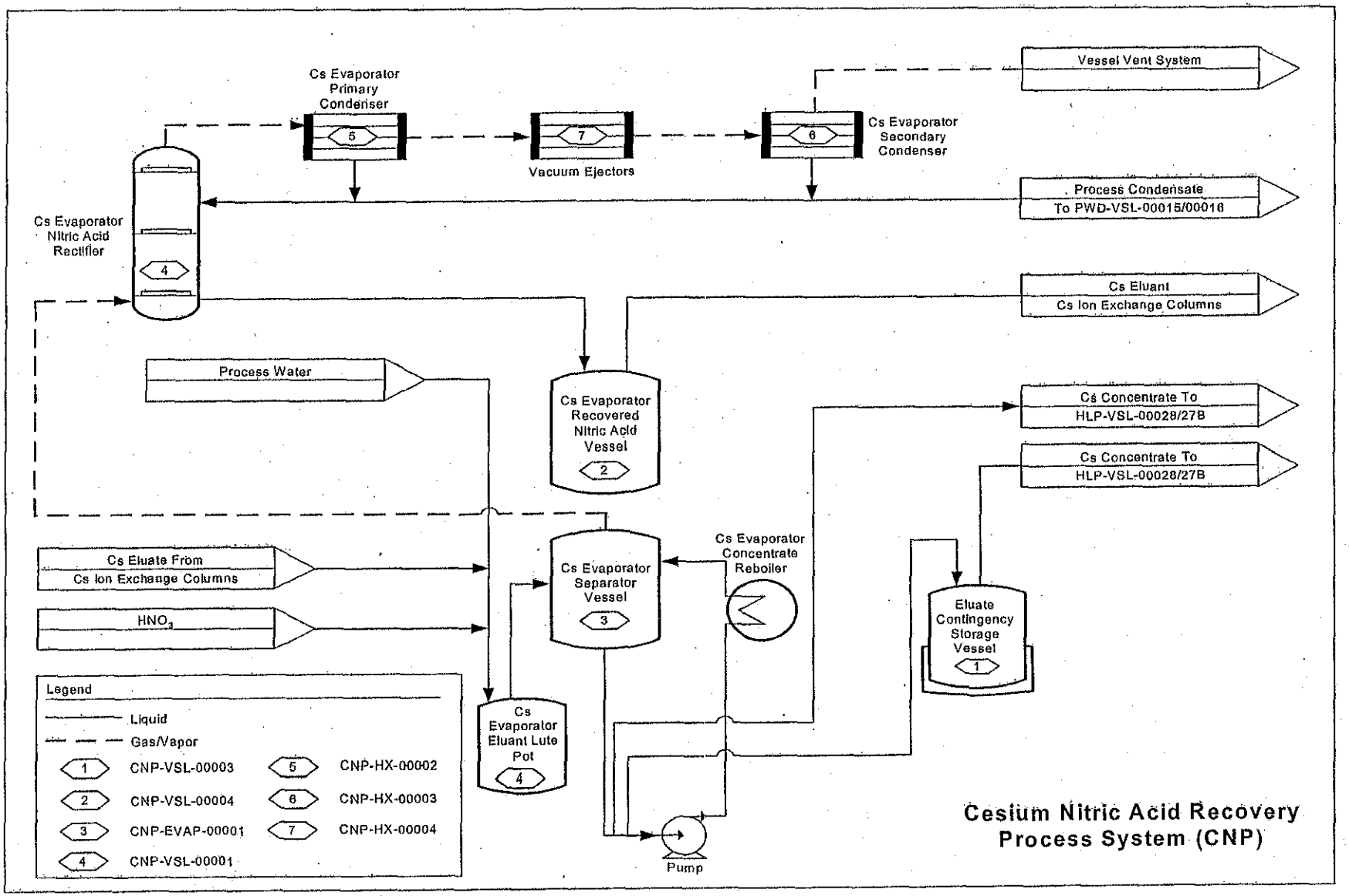

1 **Figure 4A-11 Cesium Resin Addition Process System (CRP)**

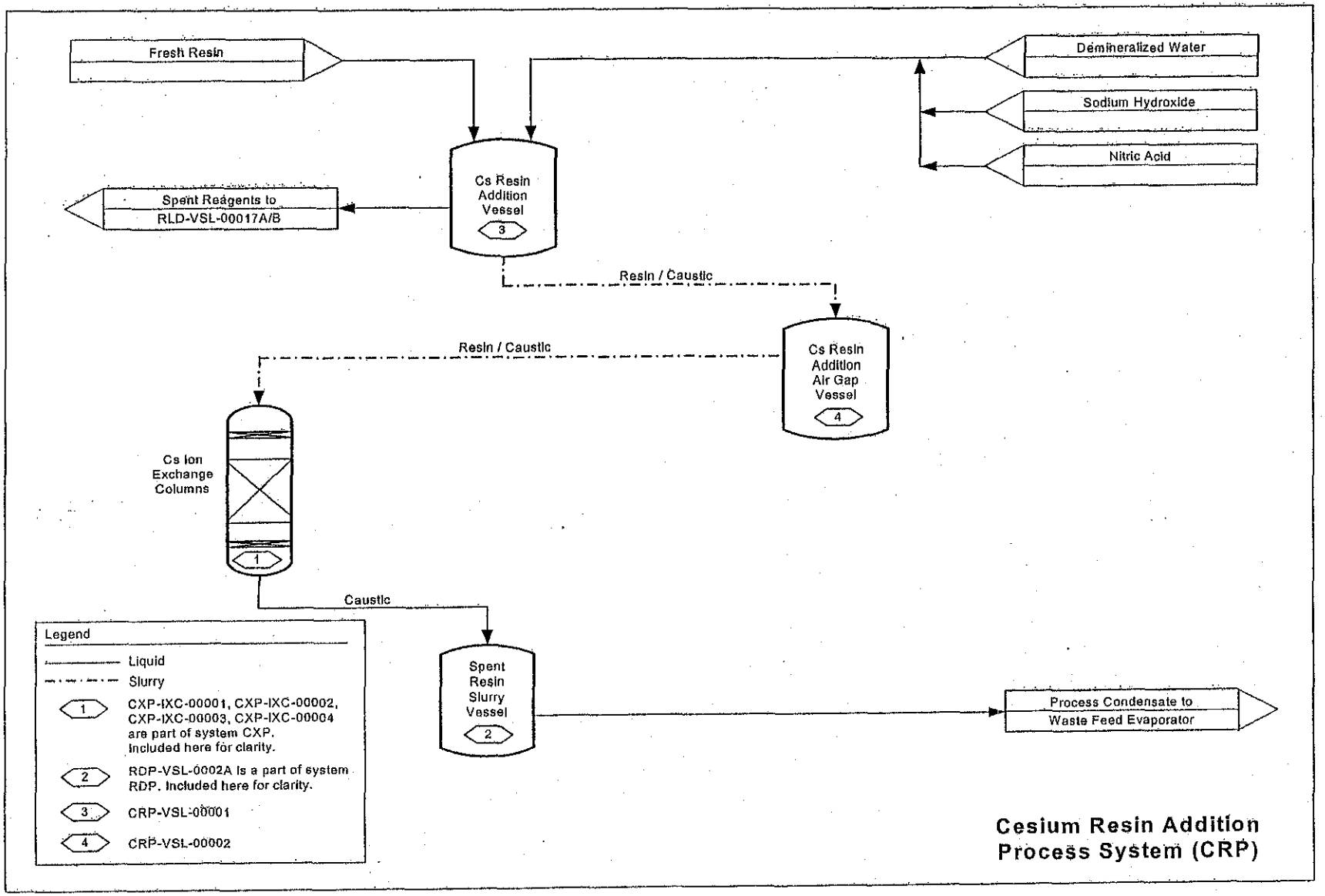

2

Figure 4A-12 Reserved

Figure 4A-13 Reserved

Figure 4A-14 Reserved

Figure 4A-15 Spent Resin and Dewatering Process System (RDP)

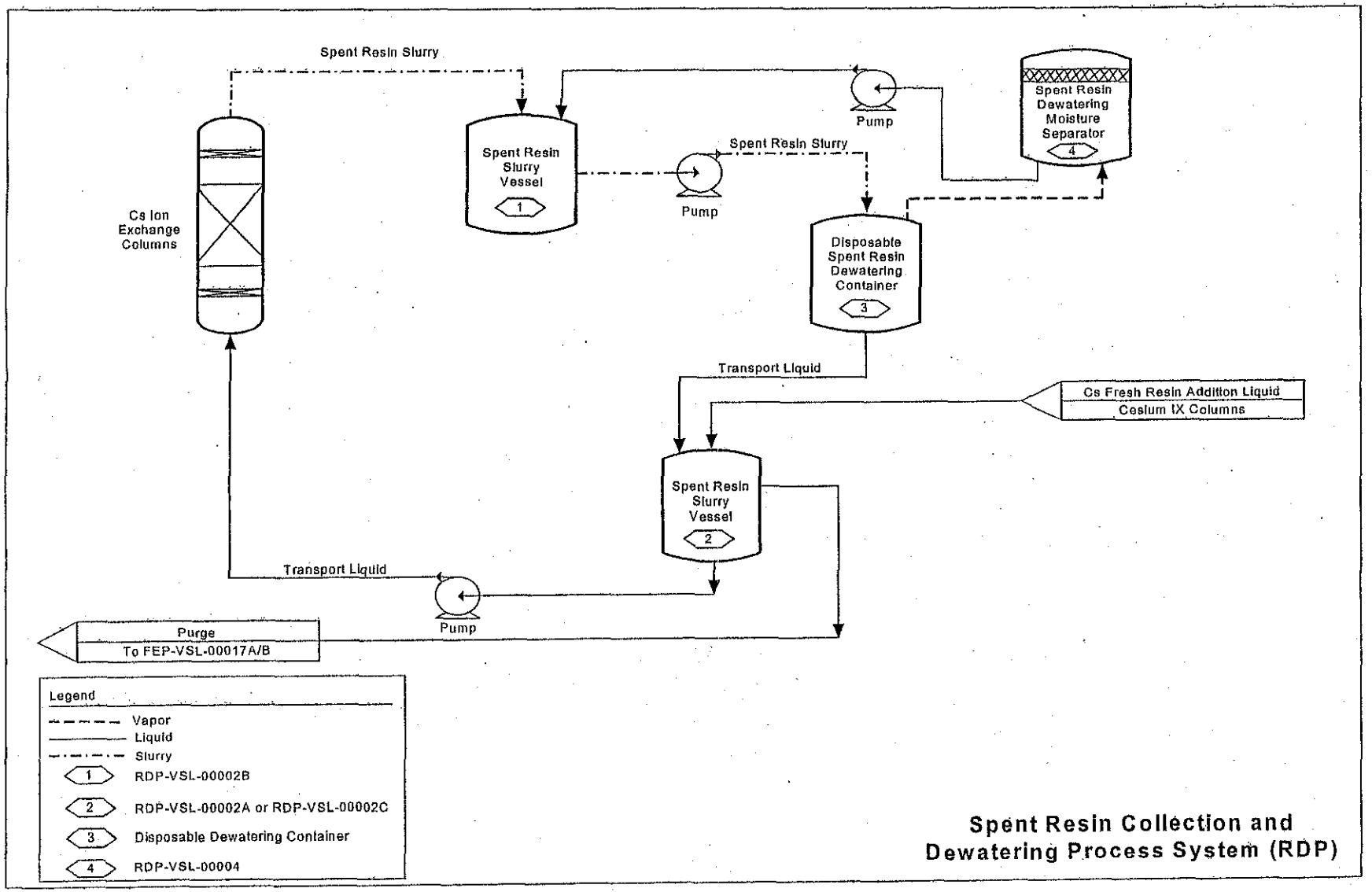

Figure 4A-16 Treated LAW Evaporation Process System (TLP) and Treated LAW Concentrate Storage Process System (TCP)

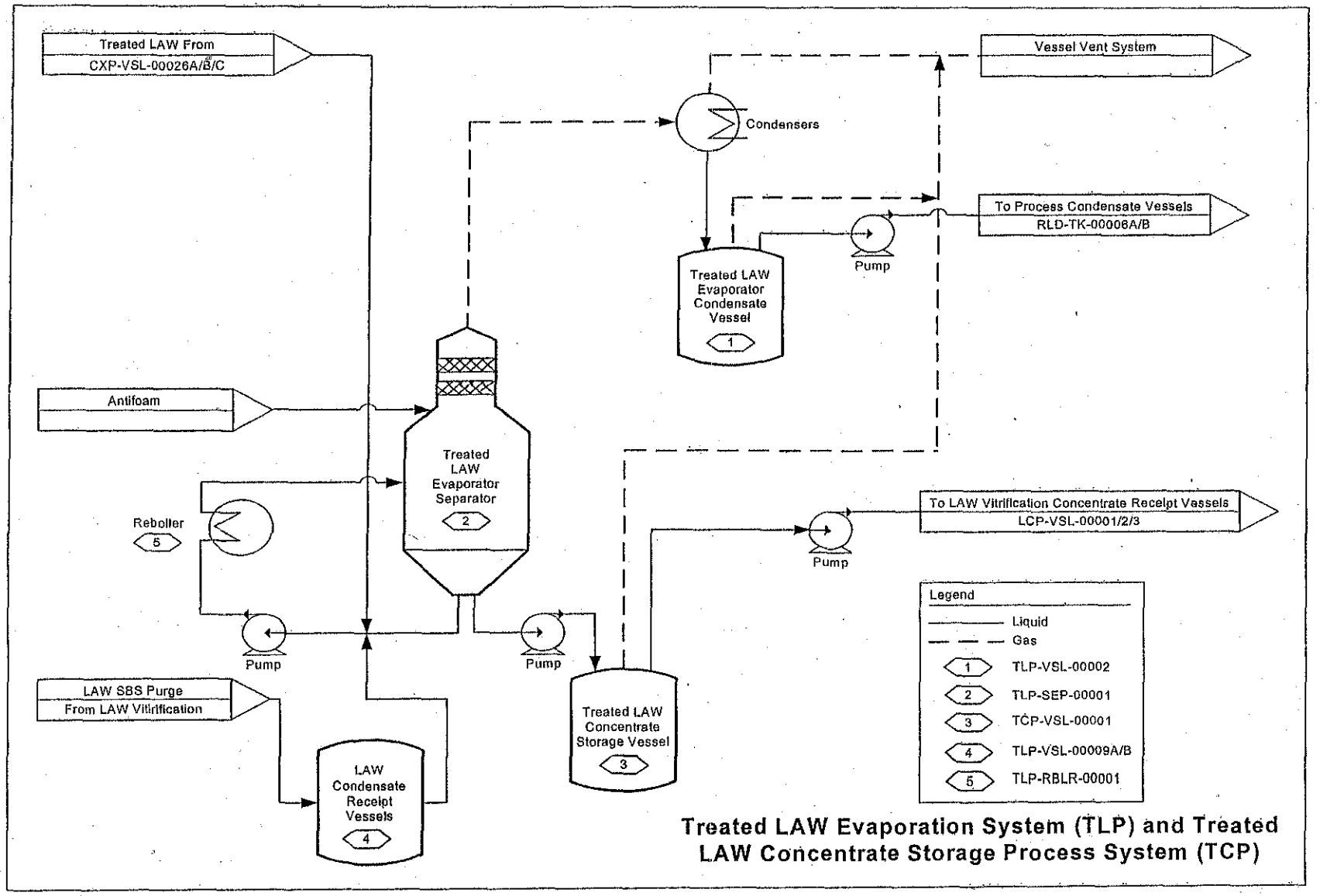

Figure 4A-17 Plant Wash and Disposal System Above Grade (PWD)

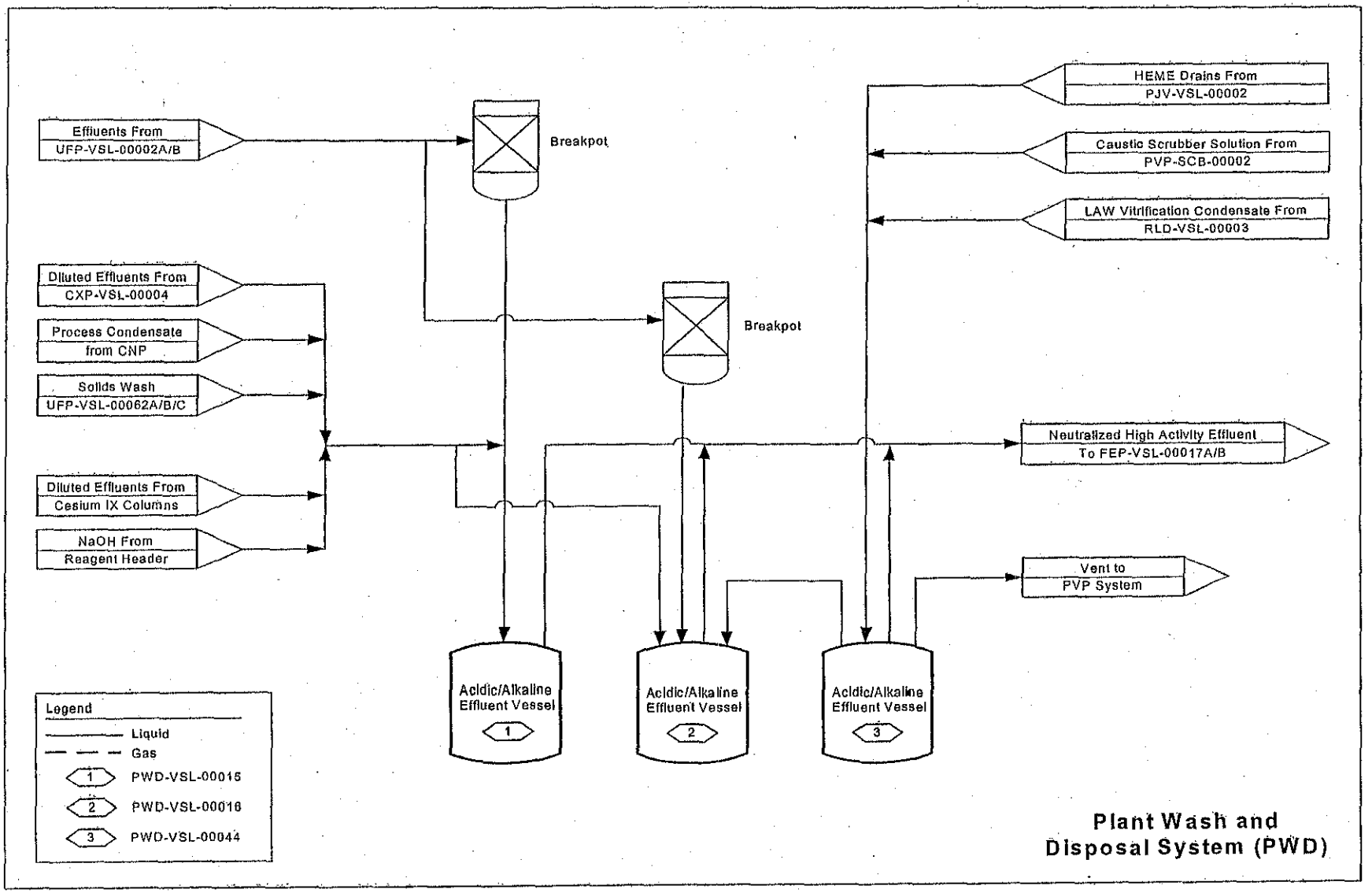

Figure 4A-18 Pretreatment Plant Radioactive Liquid Waste Disposal System (RLD)

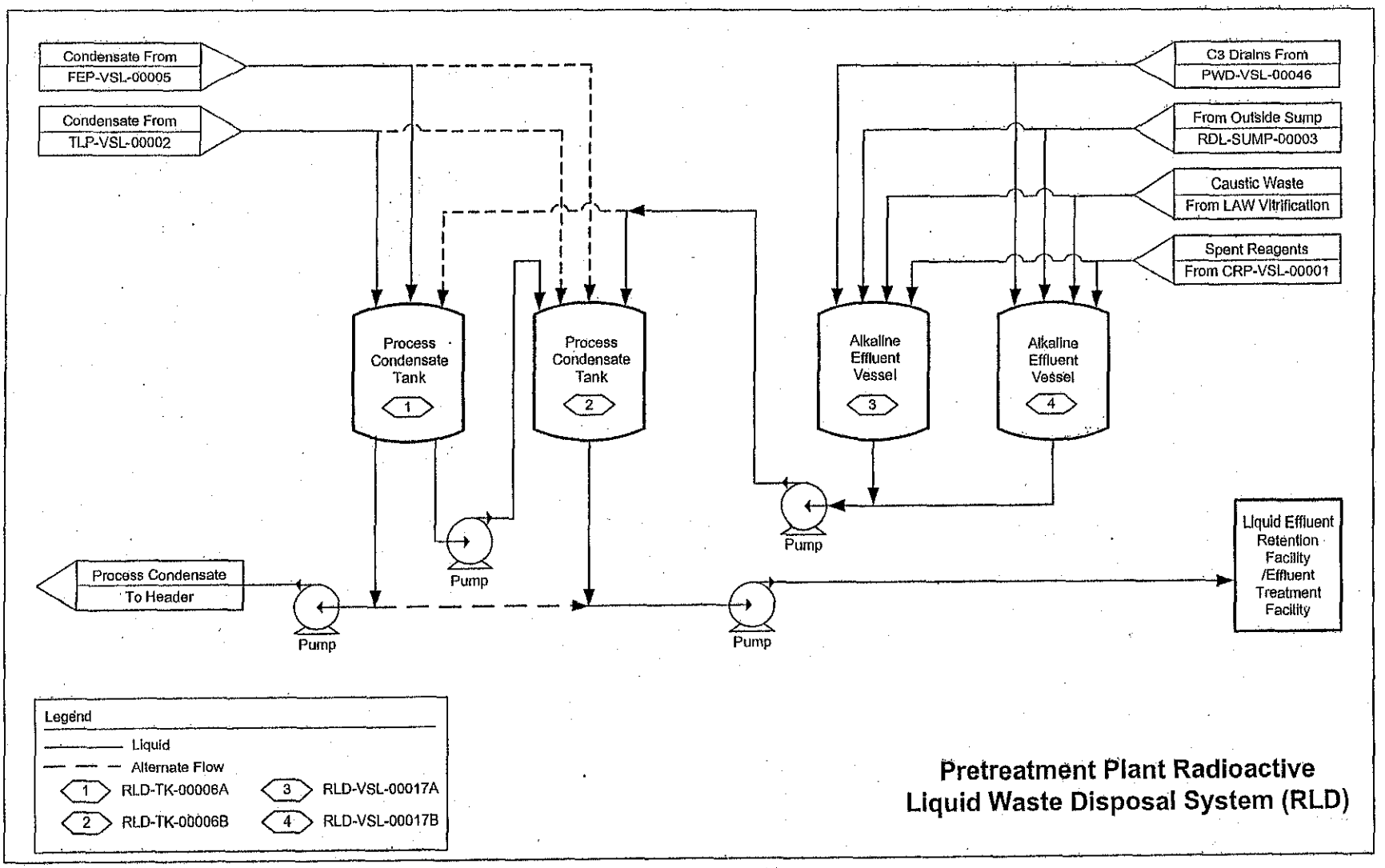

Figure 4A-19 Pretreatment Vessel Vent Process System (PVP) and Pretreatment Plant Vessel Vent Exhaust System (PVV)

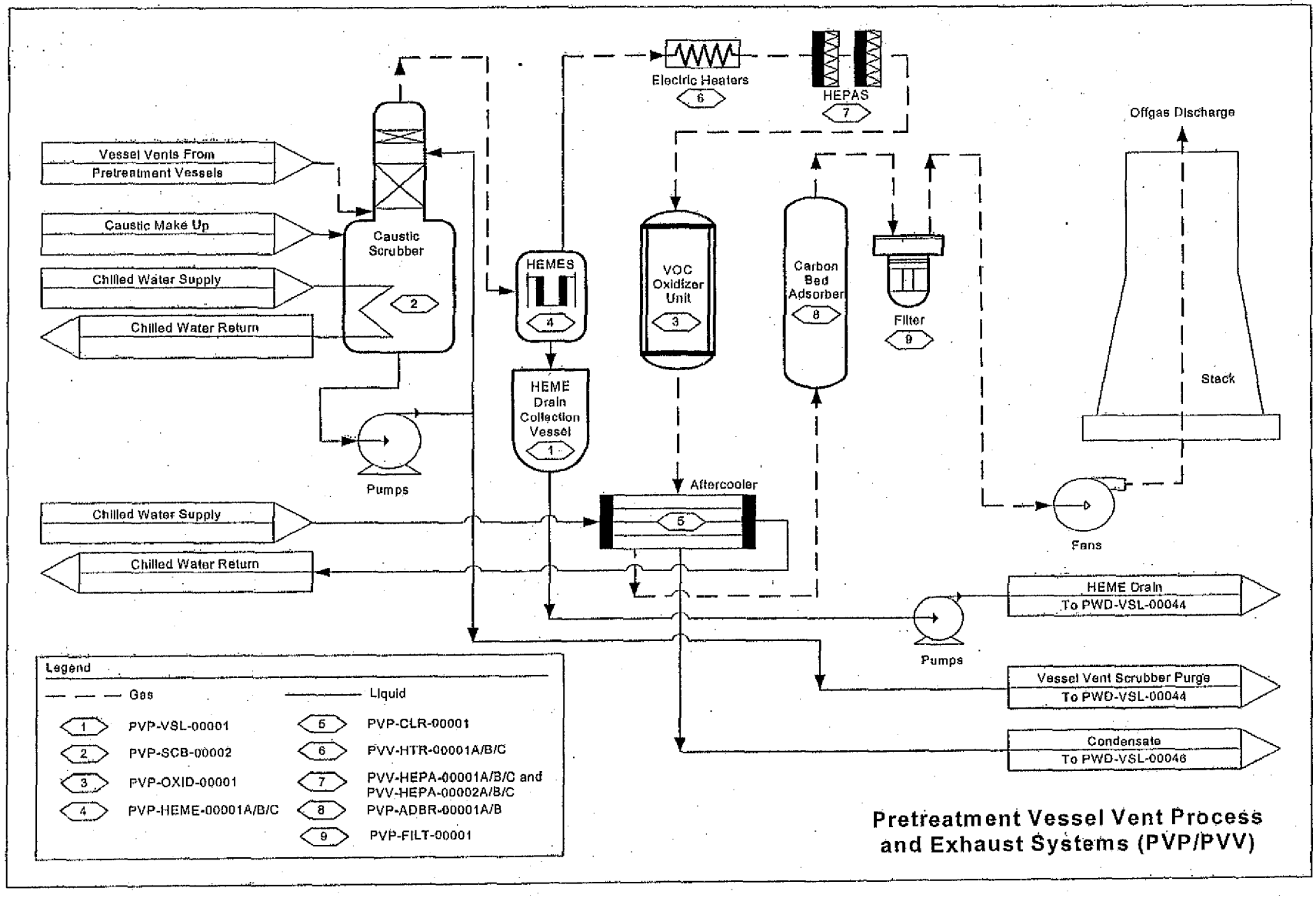

Figure 4A-20 LAW Concentrate Receipt Process System (LCP) and LAW Melter Feed Process System (LFP)

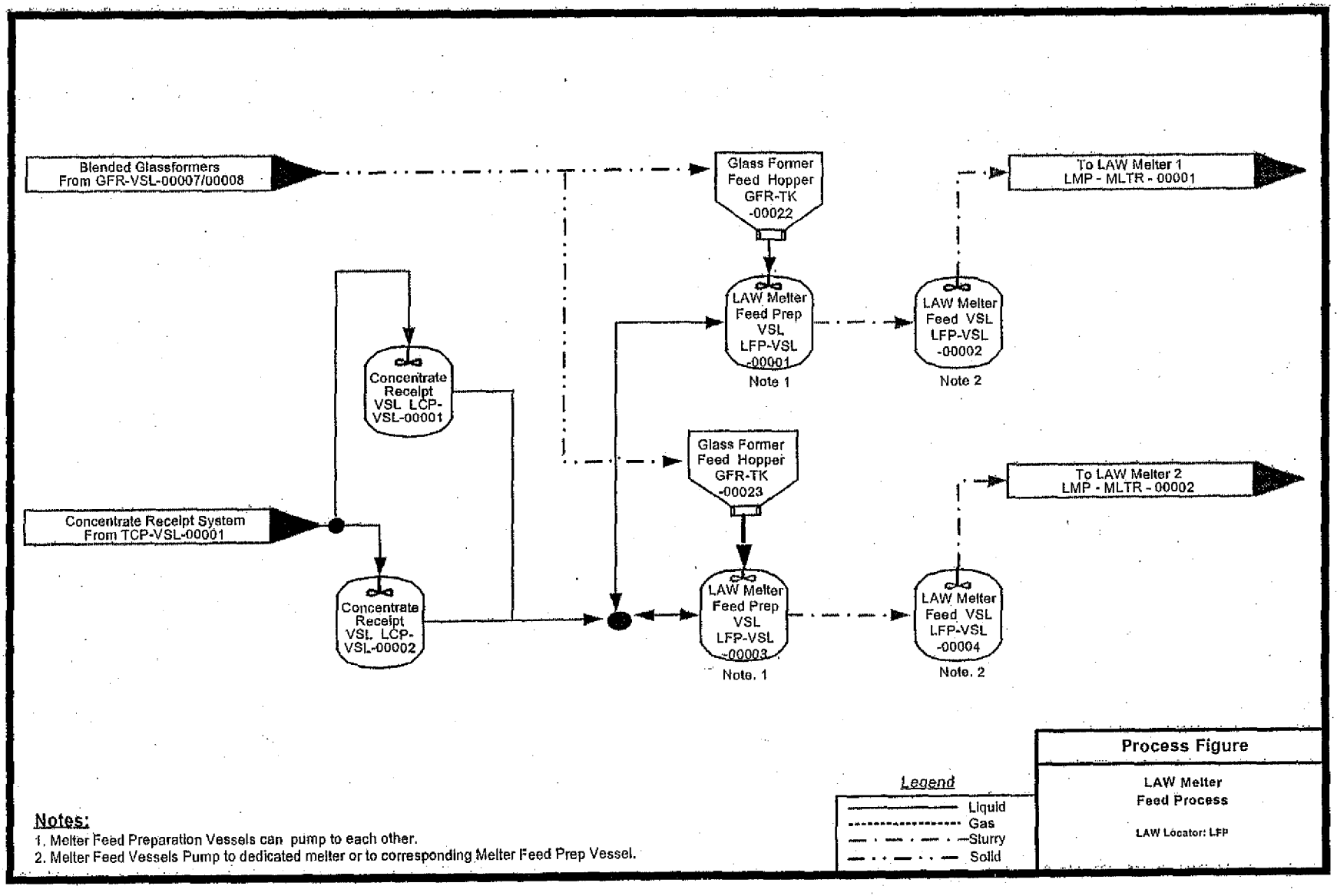

Figure 4A-21 LAW Melter Process System (LMP)

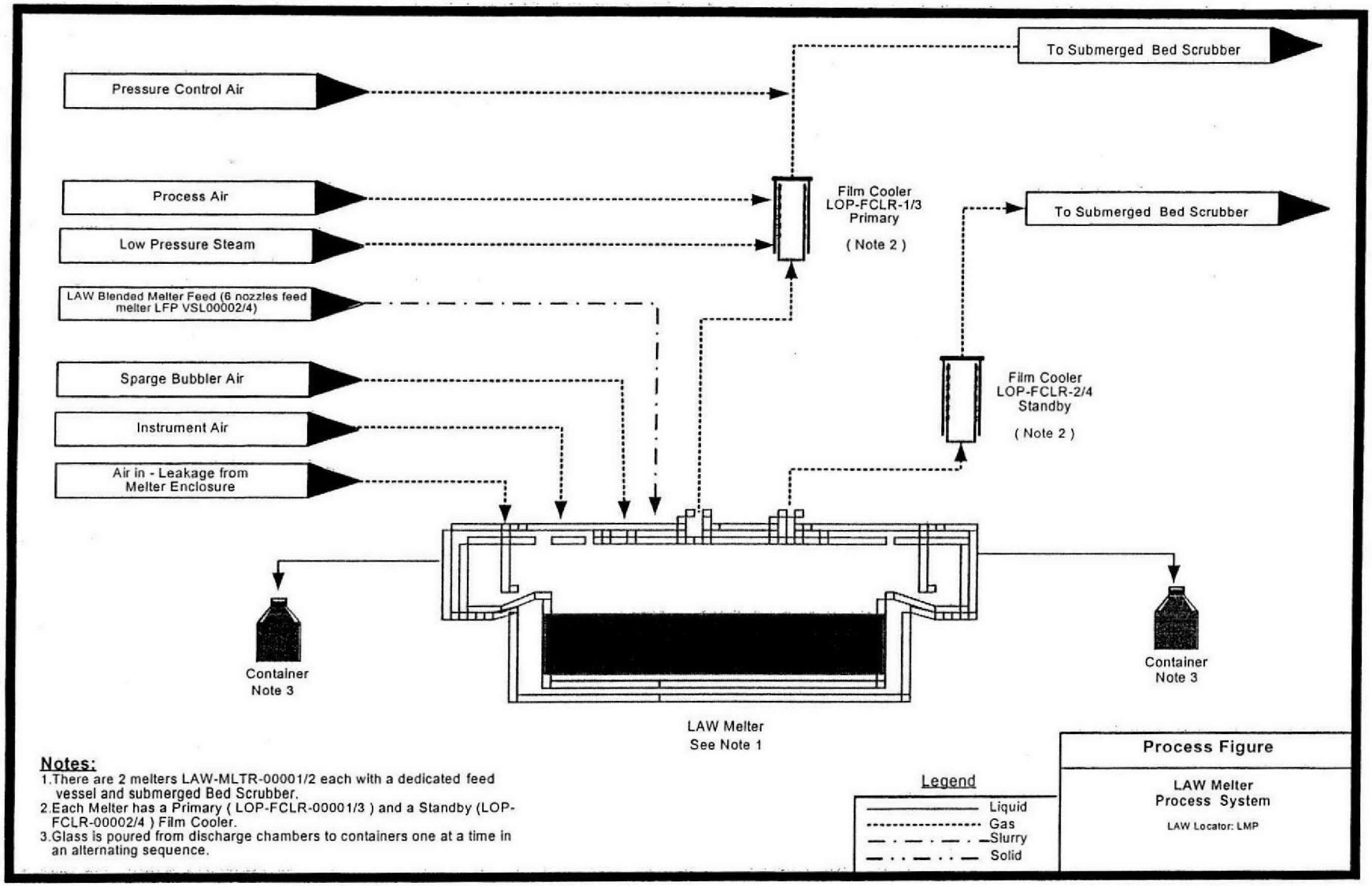

Figure 4A-22 LAW Primary Offgas Process System (LOP)

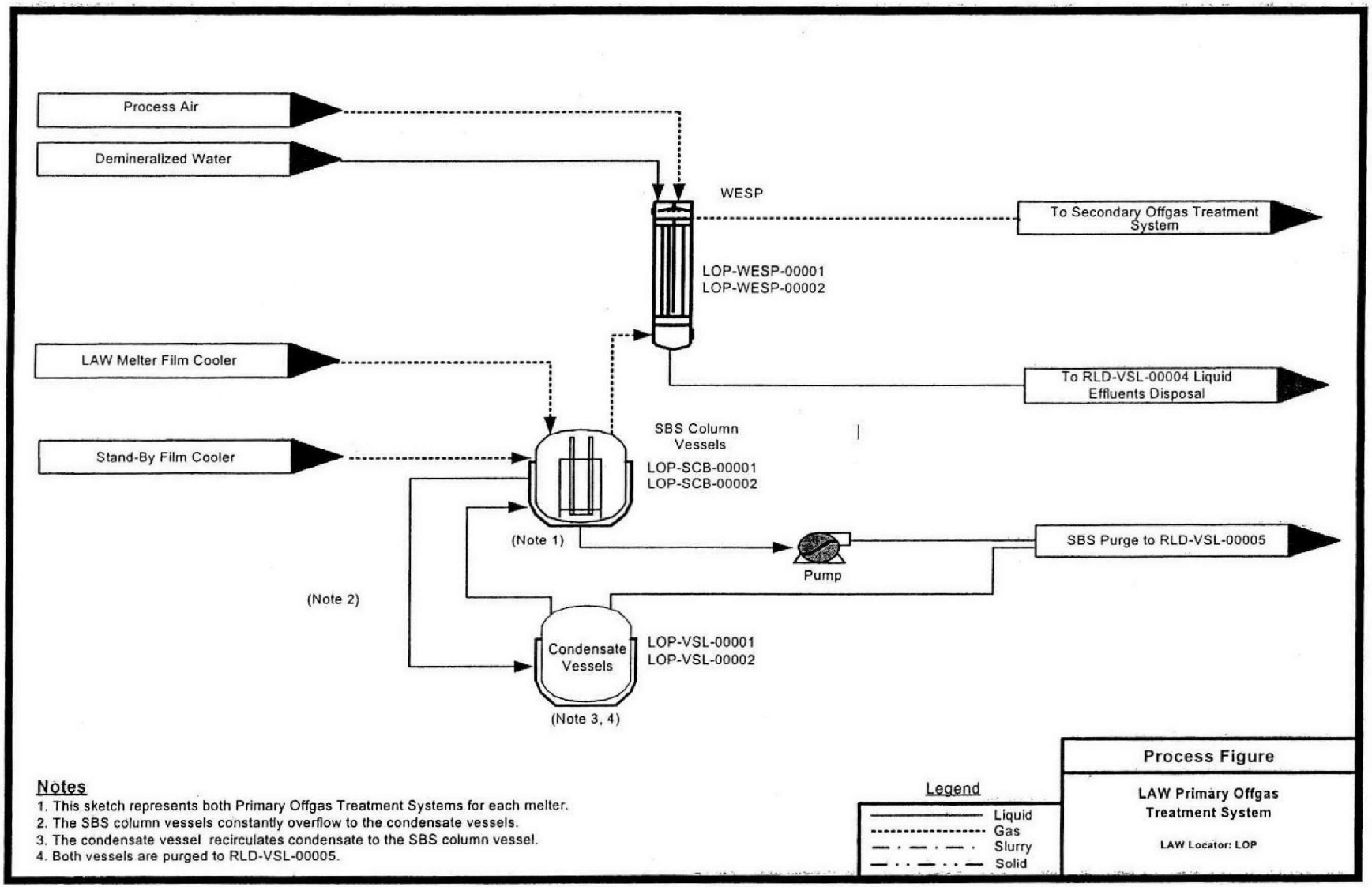

Figure 4A-23 LAW Secondary Offgas/Vessel Vent Process System (LVP)

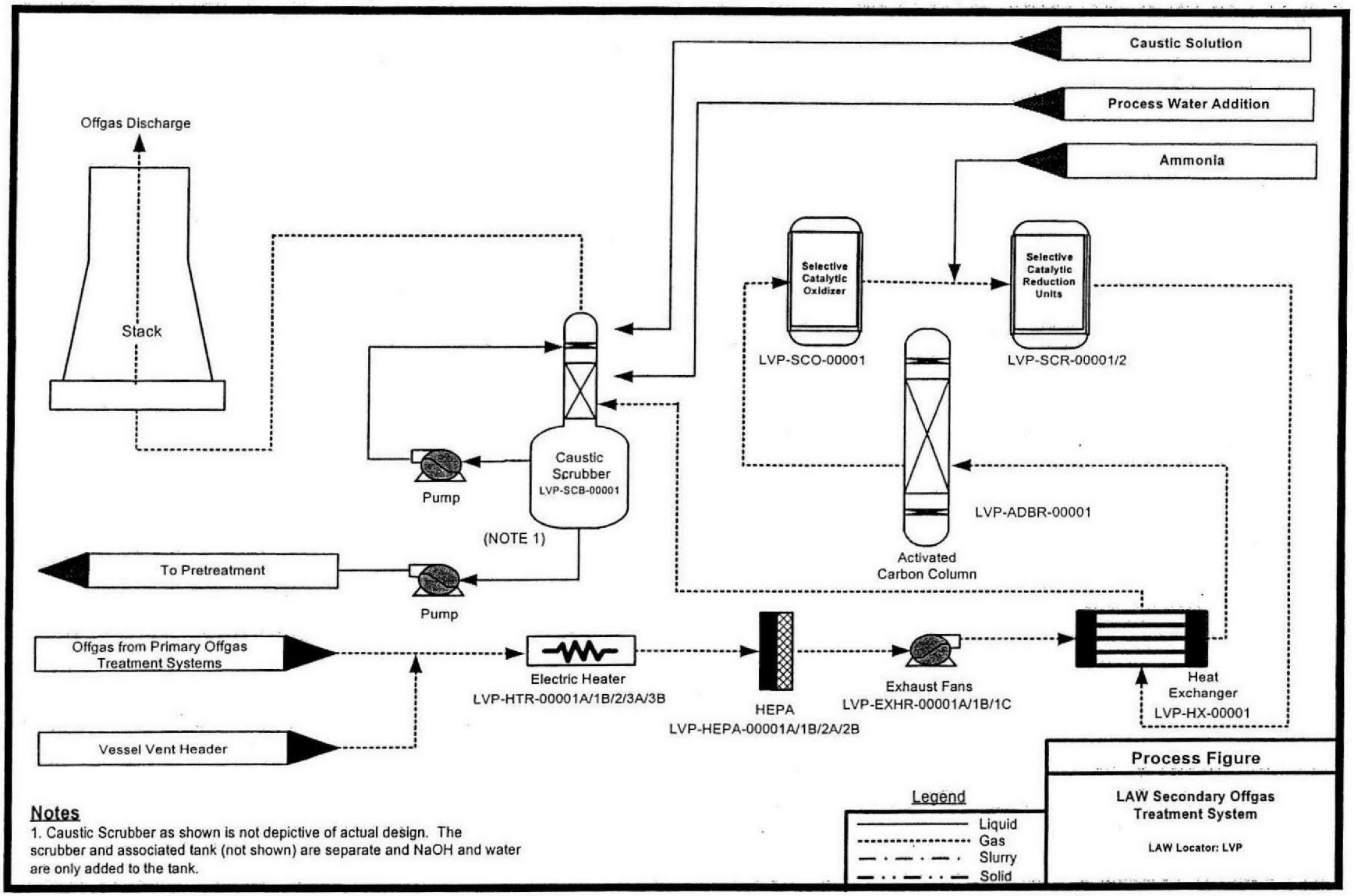

Figure 4A-24 LAW Container Finishing Handling System (LFH)

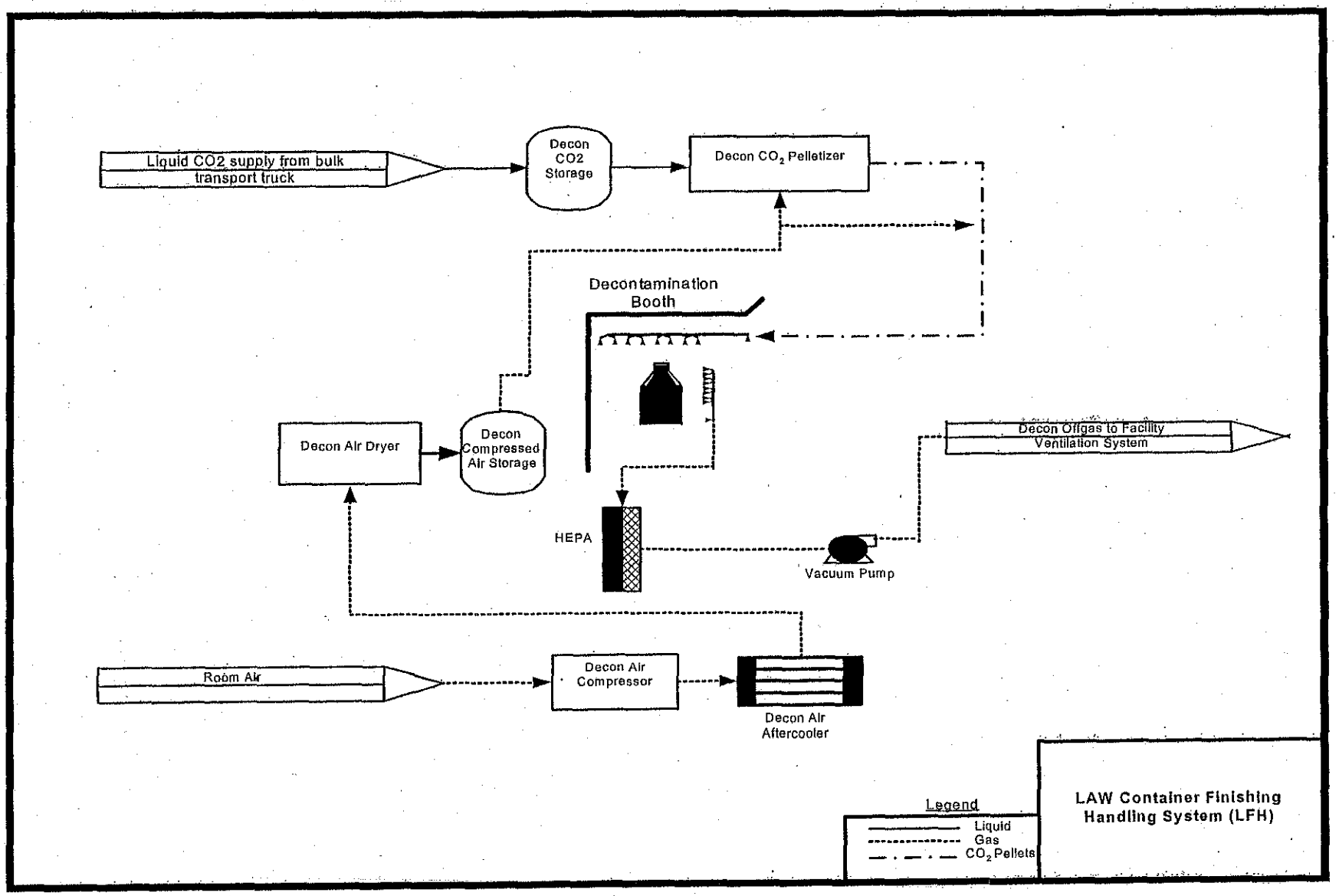

Figure 4A-25 LAW Vitrification Plant Radioactive Liquid Waste Disposal System (RLD) and Non-Radioactive Liquid Waste Disposal System (NLD)

Figure 4A-25 has been deleted and superceded by process flow diagram 24590-LAW-M5-V17T-P0014 (Attachment 51, Appendix 9.1)

Figure 4A-26 HLW Cave Receipt Process System (HCP) and HLW Melter Feed Process System (HFP)

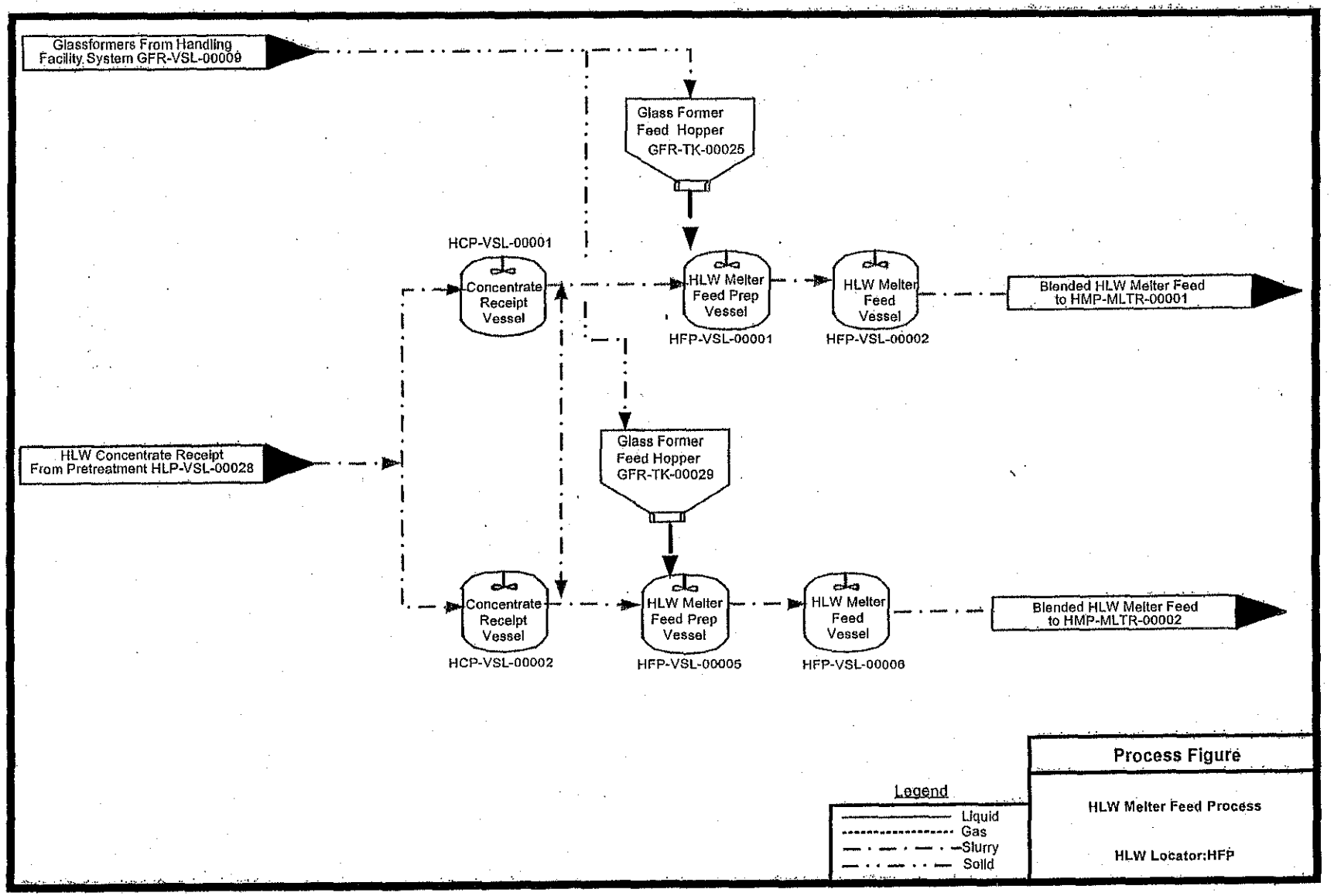

1 **Figure 4A-27 HLW Melter Process System (HMP)**

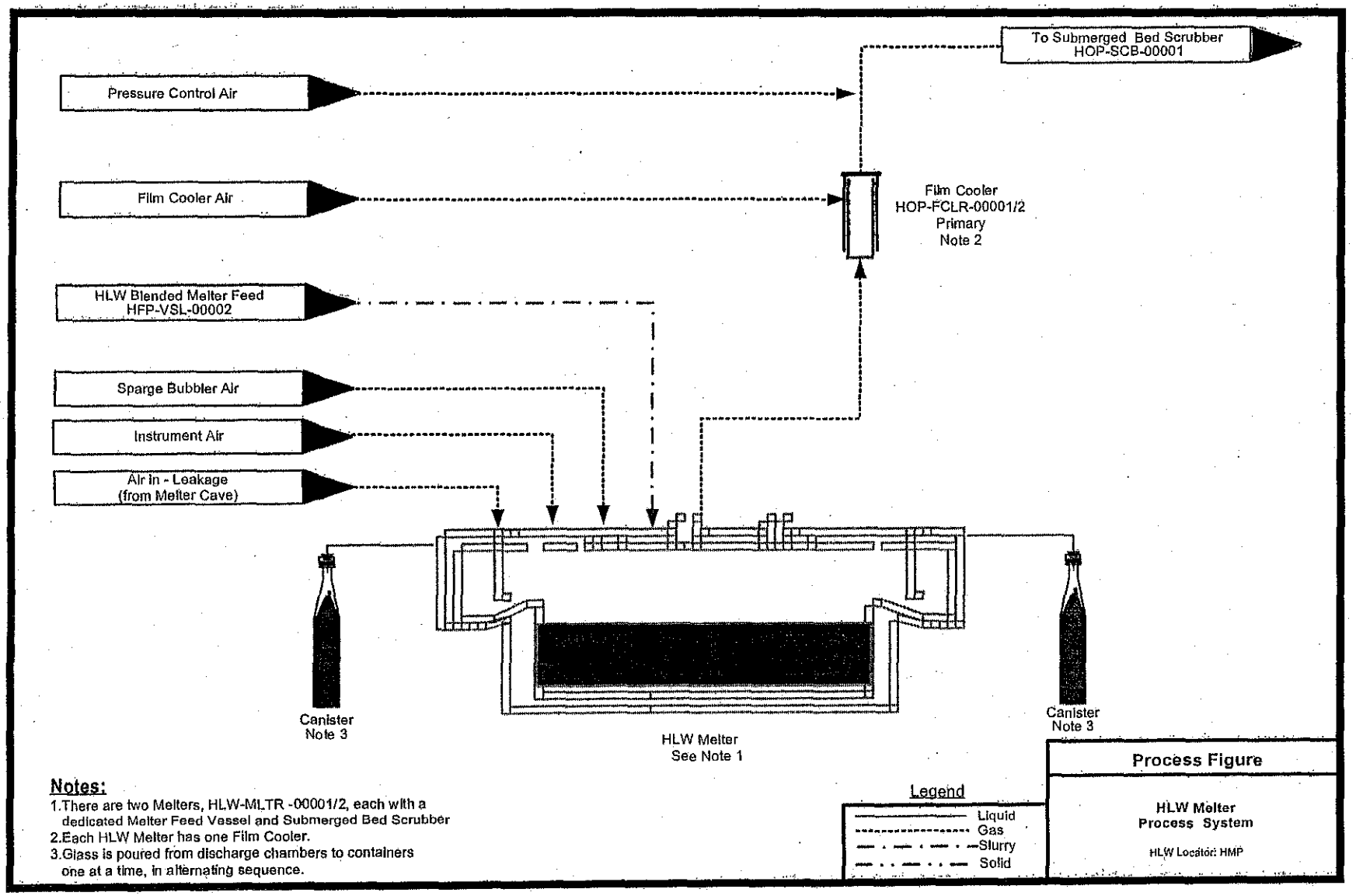

2

Figure 4A-28 Melter Offgas Treatment Process System (HOP) Primary System

Figure 4A-28 has been deleted and superceded by process flow diagrams 24590-HLW-M5-V17T-P0003 (Attachment 51, Appendix 10.1)

Figure 4A-29 Melter Offgas Treatment Process System (HOP) Secondary System

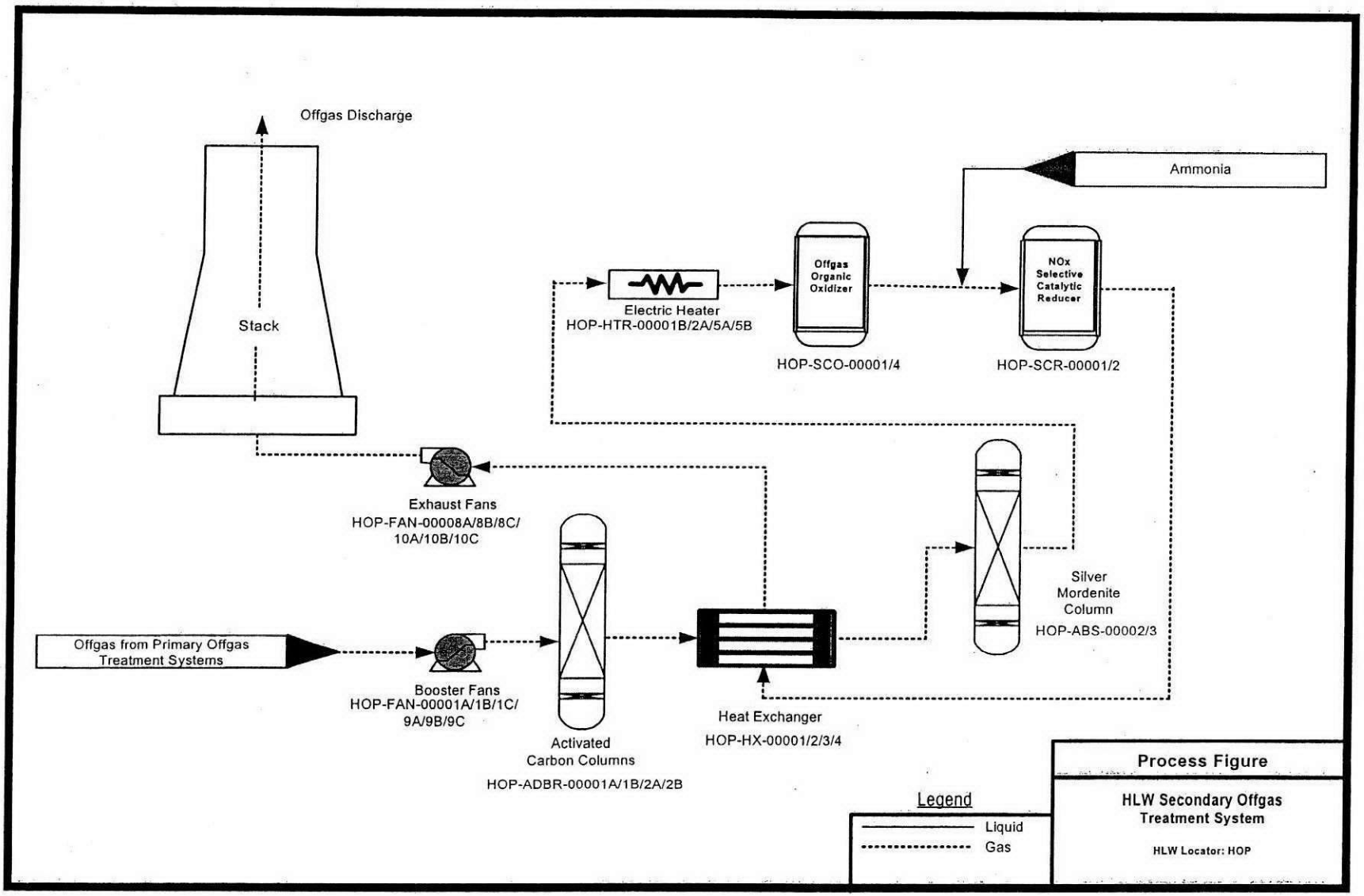

Figure 4A-30 HLW Canister Decontamination Handling System (HDH)

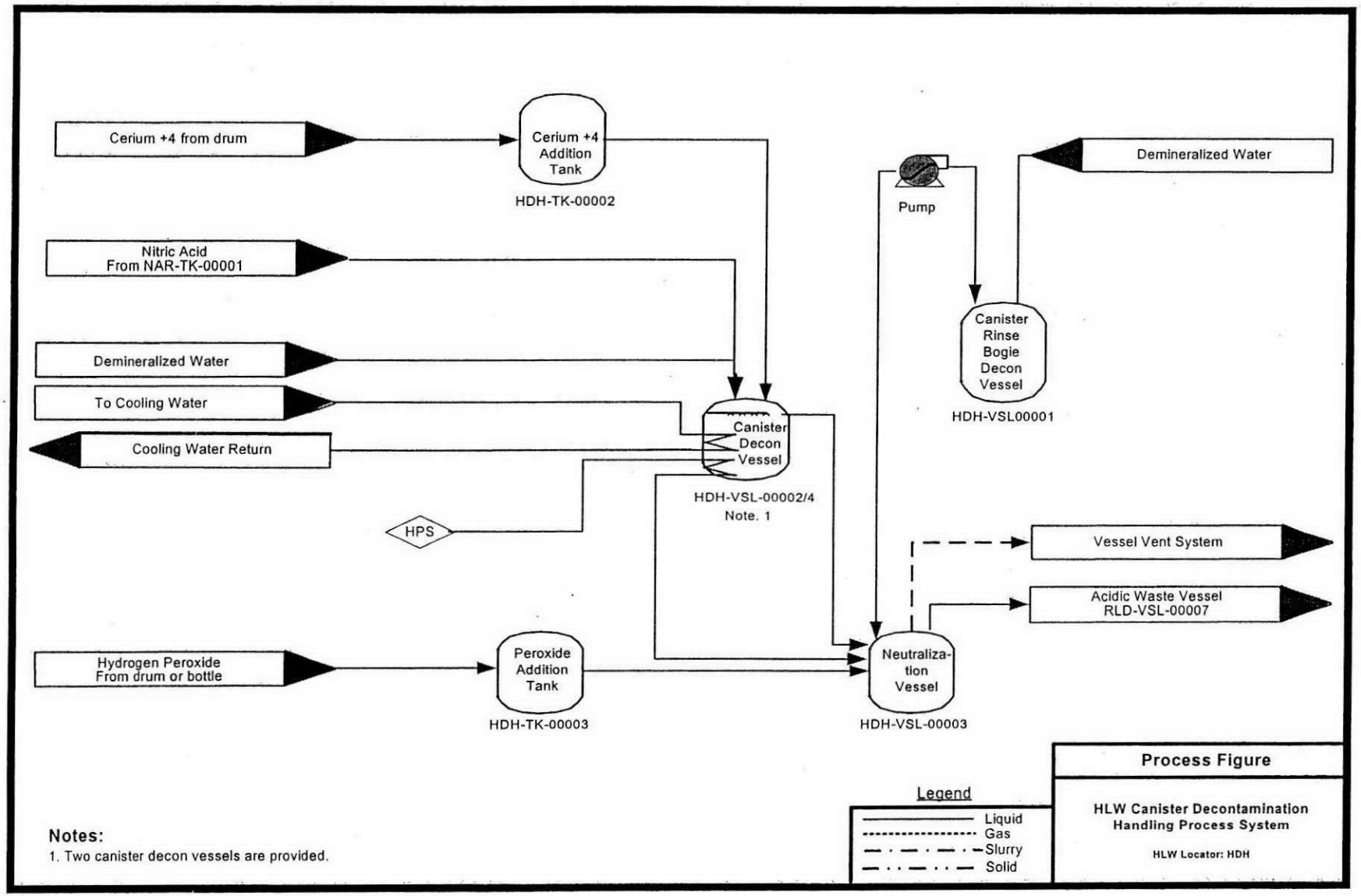

Figure 4A-31 HLW Vitrification Plant Radioactive Liquid Waste Disposal System (RLD) and Non-Radioactive Liquid Waste Disposal System (NLD)

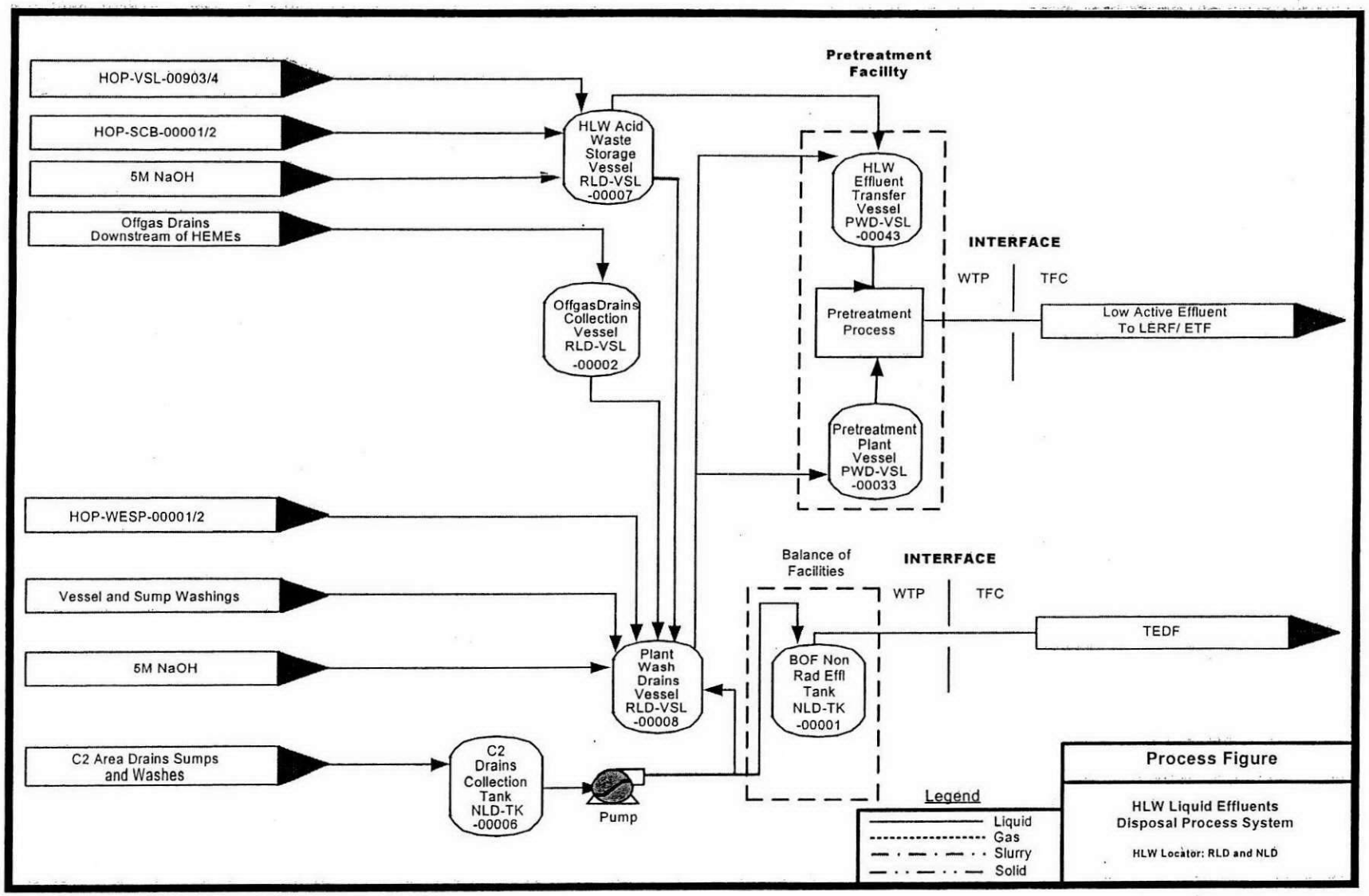

Figure 4A-39 Reserved

Figure 4A-44 Typical Tank System - Plant Wash and Disposal System (PWD)

Figure 4A-44 has been deleted and superceded by process flow diagram, 24590-PTF-M5-V17T-P0022002 (Attachment 51, Appendix 8.1)

Figure 4A-48 Typical System - LAW Melter Process System (LMP)

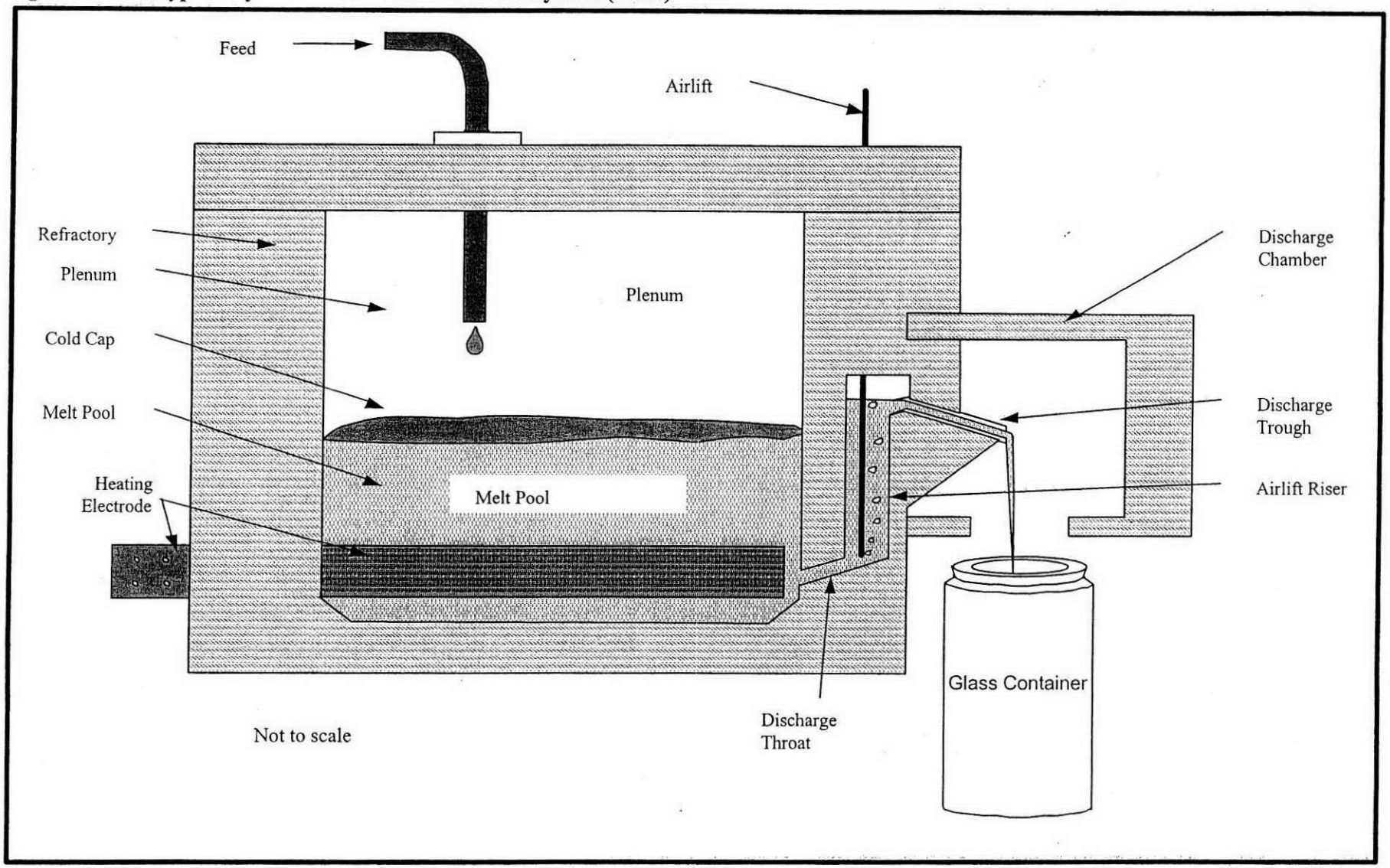

Figure 4A-54 Typical System - HLW Melter Process System (HMP)

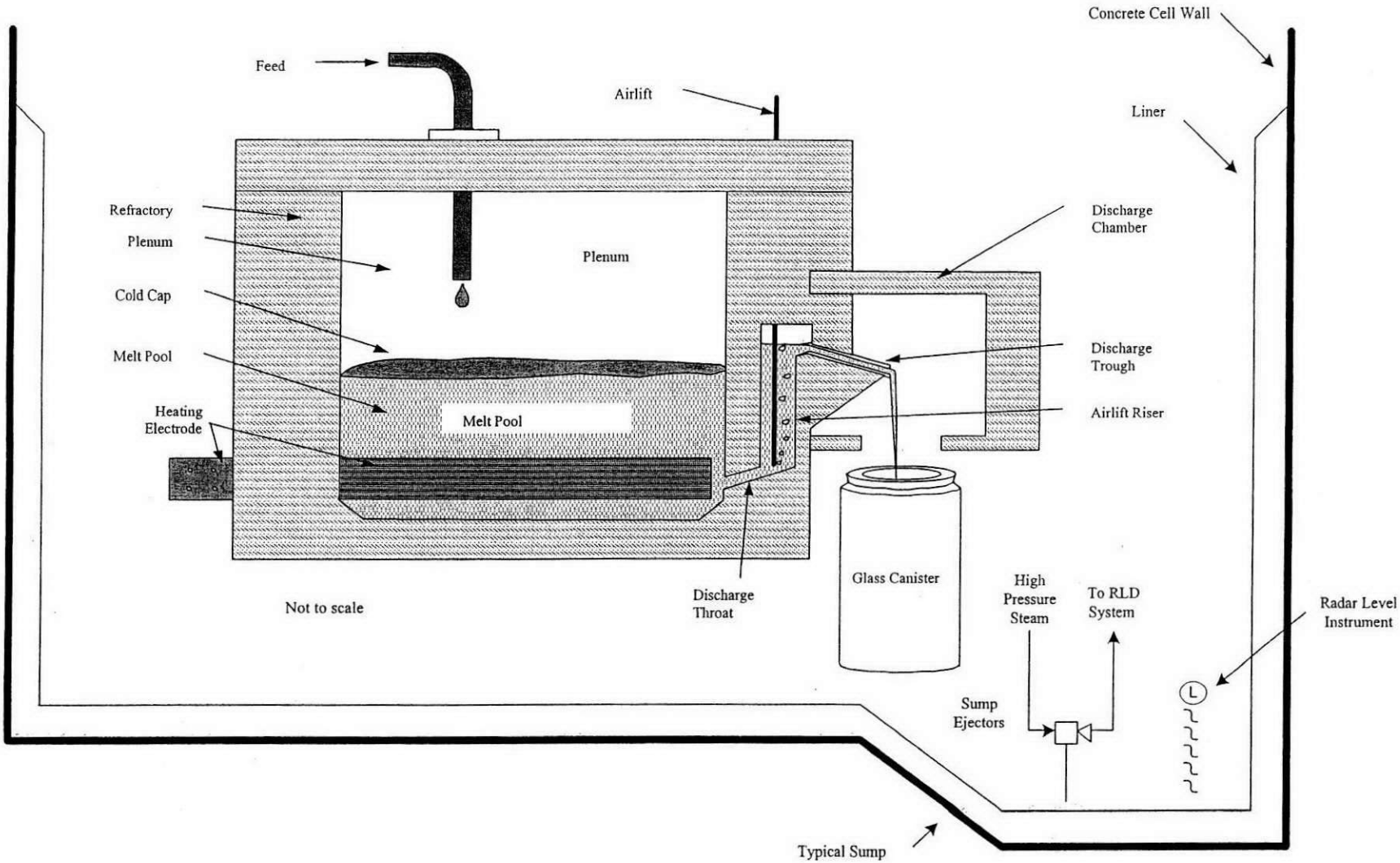

Figure 4A-55 Typical Tank System - Melter Offgas Treatment Process System (HOP)

Figure 4A-55 has been deleted and superceded by equipment assembly drawing 24590-HLW-MV-HOP-P0001 and 24590-HLW-MV-HOP-P0003 (Attachment 51, Appendix 10.6)

Figure 4A-57 Typical Tank System - Radioactive Liquid Waste Disposal System (RLD)

Figure 4A-57 has been deleted and superceded by equipment assembly drawing 24590-LAW-MV-RLD-P0001 (Attachment 51, Appendix 9.6)

Figure 4A-58 Reserved

Figure 4A-58 has been deleted because the BOF Container Storage Area was eliminated due to design evolution.

Figure 4A-59 Typical System - Containment Building (Sheet 1)

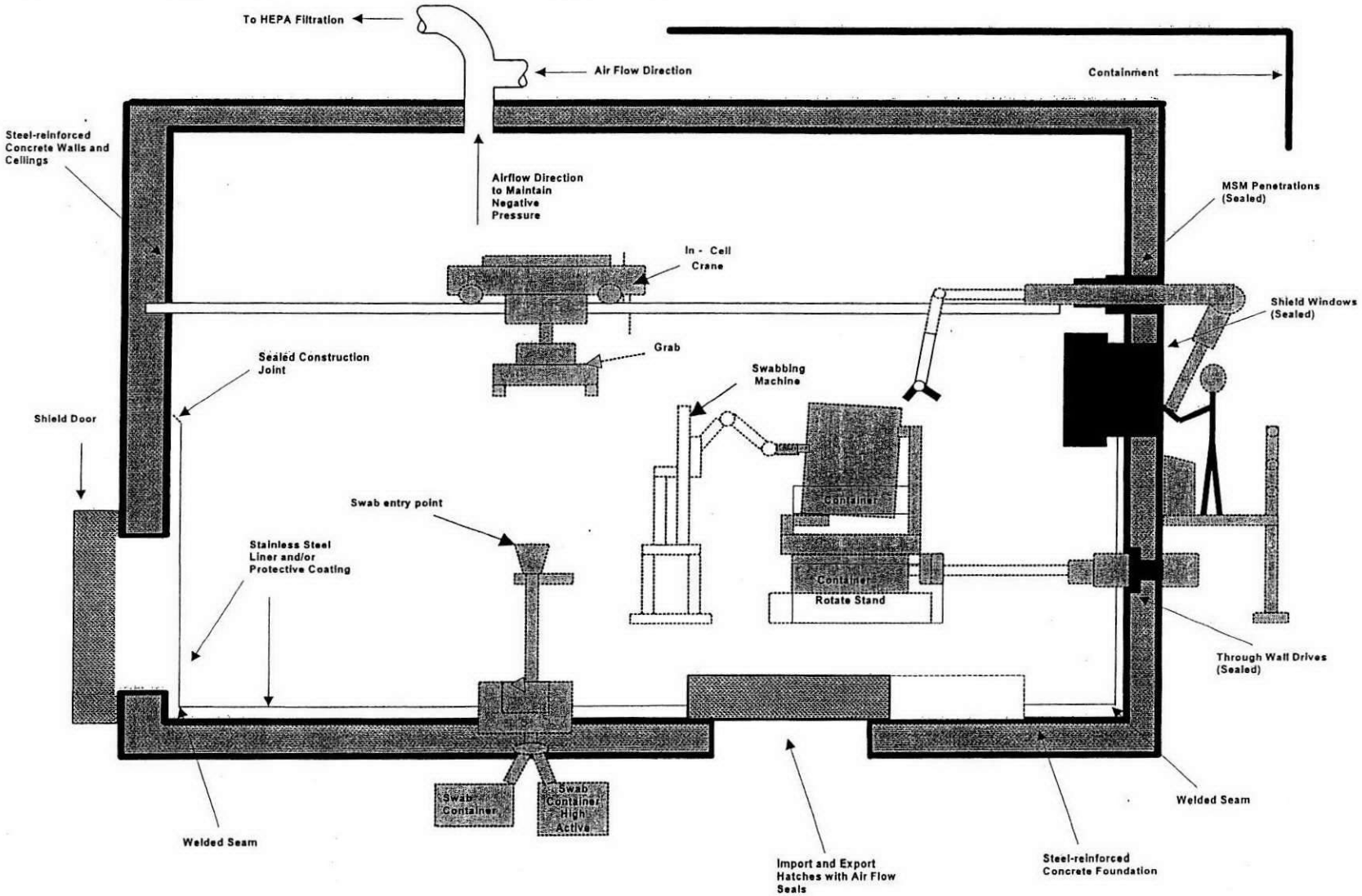

Typical System - Containment Building

Figure 4A-59 Typical System - Containment Building Typical Design Features Crosswalk (Sheet 2)

Containment Building	Negative Cell Air Pressure	Air Flow to HEPA Filters	SS Liner With Welded Seams	Import / Export Hatch - (Controlled Air Gap)	Shield Windows - (Sealed)	Steel Reinforced Concrete Floor/Foundation	Steel Reinforced Concrete Walls & Ceilings	Through Wall MSMs - (Sealed)	In - Cell Bridge Crane / Monorail	Horiz./Vertical Shield Doors - (Controlled Air Gap)	Miscellaneous In-cell Room Equipment
Pretreatment Plant											
Pretreatment Hot Cell Containment Building (P-0123)	X	X	X	X	X	X	X	X	X	X	X
Pretreatment Maintenance Containment Building											
PM0124 Hot Cell Crane Maintenance building	X		X		X	X	X		X		X
P-0121A Spent Resin Dewatering	X	X		X	X	X	X				X
P-0122A Waste Packaging Area	X	X	X	X	X	X	X				X
P-0123A Remote Decontamination Maintenance Cave	X	X	X	X	X	X	X		X		X
P-0124 C3 Workshop	X	X	X	X	X	X	X		X		X
P-0124A C3 Workshop	X	X	X	X	X	X	X		X		X
P-0125 Filter Cask Airlock	X	X		X	X	X	X			X	X
P-0125A Filter Cask Area	X	X	X	X	X	X	X		X		X
P-0128A MSM Repair Area	X	X		X	X	X	X				X
P-0128 Temporary Storage Room	X				X	X	X				X
Pretreatment Filter Package Maintenance Containment Building (P-0223)	X	X	X			X	X			X	X
Pretreatment Air Filter Package Containment Building (P-0355)	X	X	X			X	X			X	X

1

Containment Building	Negative Cell Air Pressure	Air Flow to HEPA Filters	SS Liner With Welded Seams	Import / Export Hatch - (Controlled Air Gap)	Shield Windows - (Sealed)	Steel Reinforced Concrete Floor/Foundation	Steel Reinforced Concrete Walls & Ceilings	Through Wall MSMs - (Sealed)	In - Cell Bridge Crane / Monorail	Horiz./Vertical Shield Doors - (Controlled Air Gap)	Miscellaneous In-cell Room Equipment
LAW Vitrification Plant											
LAW LSM Gallery Containment Building (L-0112)	X	X				X	X			X	X
LAW Container Finishing Containment Building											
L-0109B Swabbing Cell North Line	X	X		X	X	X	X	X	X	X	X
L-0109C Decontamination Area North Line	X	X		X	X	X	X	X	X	X	X
L-0109D Inert Fill / Welding Area North Line	X	X		X	X	X	X	X	X	X	X
L-0115B Swabbing Cell South Line	X	X		X	X	X	X	X	X	X	X
L-0115C Decontamination Area South Line	X	X		X	X	X	X	X	X	X	X
L-0115D Inert Fill / Welding Area South Line	X	X		X	X	X	X	X	X	X	X
L-0109E Container Monitoring/Export Area - North Line	X	X		X	X	X	X	X	X	X	X
L-0115E Container Monitoring/Export Area - South Line	X	X		X	X	X	X	X	X	X	X
LAW Vit Plant C3 Workshop Containment Building (L-226A)	X	X				X	X		X		X
LAW Consumable Import/Export Containment Building (L-0119B)	X	X				X	X		X		X
LAW Pour Cave Containment Building											
L-B015A Pour Cave (Melter 1)	X	X		X	X	X	X	X	X	X	X
L-B013C Pour Cave (Melter 1)	X	X		X	X	X	X	X	X	X	X
L-B013B Pour Cave (Melter 2)	X	X		X	X	X	X	X	X	X	X
L-B011C Pour Cave (Melter 2)	X	X		X	X	X	X	X	X	X	X
L-B011B (Spare)	X	X		X	X	X	X	X	X	X	X
L-B009B (Spare)	X	X		X	X	X	X	X	X	X	X
LAW Container Buffer Storage Containment Building											
L-B025C											
L-B025D											

2

1

Containment Building	Negative Cell Air Pressure	Air Flow to HEPA Filters	SS Liner With Welded Seams	Import / Export Hatch - (Controlled Air Gap)	Shield Windows - (Sealed)	Steel Reinforced Concrete Floor/Foundation	Steel Reinforced Concrete Walls & Ceilings	Through Wall MSMs - (Sealed)	In - Cell Bridge Crane / Monorail	Horiz./Vertical Shield Doors - (Controlled Air Gap)	Miscellaneous In-cell Room Equipment
HLW Vitrification Plant											
HLW Melter Cave No. 1 Containment Building:	X	X	X	X	X	X	X	X	X	X	X
H-0117 Melter Cave No. 1	X	X	X	X	X	X	X	X	X	X	X
H-0116B Melter Cave No. 1 - C2/C3 Airlock	X	X				X	X			X	
H-0310A Melter Cave No. 1 Equipment Decontamination Area	X	X	X	X	X	X	X	X	X	X	
HLW Melter Cave No. 2 Containment Building:	X	X	X	X	X	X	X	X	X	X	X
H-0106 Melter Cave No. 2	X	X	X	X	X	X	X	X	X	X	X
H-0105B Melter Cave No. 2 - C2/C3/ Airlock	X	X				X	X		X	X	
H-0304A Melter Cave No. 2 Equipment Decontamination Area	X	X	X	X	X	X	X	X	X	X	
HLW Canister Handling Cave Containment Building (H-0136)	X	X	X	X	X	X	X	X	X	X	X
HLW Canister Swab and Monitoring Cave Containment Building (H-0133)	X	X	X	X	X	X	X	X	X	X	
HLW Vit Plant C3 Workshop Containment Building (H-0311A/B)	X	X				X	X				X
HLW Filter Cave Containment Building (H-0104)	X	X		X	X	X	X	X	X	X	X
HLW Waste Handling Area Containment Building:	X	X				X	X				
H-0410B Waste Handling Area	X	X				X	X				
H-0411 Waste Handling Area	X	X				X	X				
HLW Pour Tunnel No. 1 Containment Building (H-B032)	X	X	X	X		X	X		X		
HLW Pour Tunnel No. 2 Containment Building (H-B005A)	X	X	X	X		X	X		X		
HLW Drum Swabbing and Monitoring Area Containment Building:	X	X				X	X		X		
H-0126A/B Swabbing and Monitoring Area	X	X				X	X				
HB-028 Cask Transfer Tunnel	X	X				X	X		X		

2

Figure 4A-60 Simplified General Arrangement Pretreatment - Plan at El. -45'

Figure 4A-60 has been deleted and superceded by general arrangement plan 24590-PTF-P1-P01T-P0006 (Attachment 51, Appendix 8.4)

Figure 4A-61 Simplified General Arrangement Pretreatment - Plan at El. 0'

Figure 4A-61 has been deleted and superceded by general arrangement plan 24590-PTF-P1-P01T-P0001 (Attachment 51, Appendix 8.4)

Figure 4A-62 Simplified General Arrangement Pretreatment - Plan at El. 28'

Figure 4A-62 has been deleted and superceded by general arrangement plan 24590-PTF-P1-P01T-P0002 (Attachment 51, Appendix 8.4)

Figure 4A-66 Simplified General Arrangement LAW - Plan at El. -21'

Figure 4A-66 has been deleted and superceded by general arrangement plan 24590-LAW-P1-P01T-P0001(Attachment 51, Appendix 9.4)

Figure 4A-67 Simplified General Arrangement LAW - Plan at El. 3'

Figure 4A-67 has been deleted and superceded by general arrangement plan 24590-LAW-P1-P01T-P0002 (Attachment 51, Appendix 9.4)

Figure 4A-71 Simplified General Arrangement HLW - Plan at El. -21'

Figure 4A-71 has been deleted and superceded by general arrangement plan 24590-HLW-P1-P01T-P0001 (Attachment 51, Appendix 10.4)

Figure 4A-72 Simplified General Arrangement HLW - Plan at El. 0'

Figure 4A-72 has been deleted and superceded by general arrangement plan 24590-HLW-P1-P01T-P0002 (Attachment 51, Appendix 10.4)

Figure 4A-77 Waste Management Areas Pretreatment - Plan at El. -45'

Figure 4A-77 has been deleted. Waste management areas are identified on the following general arrangement plan and section drawings (Attachment 51, Appendix 8.4):
General arrangement plan 24590-PTF-P1-P01T-P0006
Section A-A, 24590-PTF-P1-P01T-P0007
Section B-B, 24590-PTF-P1-P01T-P0008
Section C-C, 24590-PTF-P1-P01T-P0009
Section D-D, 24590-PTF-P1-P01T-P0010
Section E-E, 24590-PTF-P1-P01T-P0011
Section F-F and G-G, 24590-PTF-P1-P01T-P0012
Section H-H and J-J, 24590-PTF-P1-P01T-P0013
Section L-L and K-K, 24590-PTF-P1-P01T-P0014
Section M-M and N-N, 24590-PTF-P1-P01T-P0015
Section P-P and Q-Q, 24590-PTF-P1-P01T-P0016
Section R-R, 24590-PTF-P1-P01T-P0017

Figure 4A-78 Waste Management Areas Pretreatment - Plan at El. 0'

Figure 4A-78 has been deleted. Waste management areas are identified on the following general arrangement plan and section drawings (Attachment 51, Appendix 8.4):
General arrangement plan 24590-PTF-P1-P01T-P0001
Section A-A, 24590-PTF-P1-P01T-P0007
Section B-B, 24590-PTF-P1-P01T-P0008
Section C-C, 24590-PTF-P1-P01T-P0009
Section D-D, 24590-PTF-P1-P01T-P0010
Section E-E, 24590-PTF-P1-P01T-P0011
Section F-F and G-G, 24590-PTF-P1-P01T-P0012
Section H-H and J-J, 24590-PTF-P1-P01T-P0013
Section L-L and K-K, 24590-PTF-P1-P01T-P0014
Section M-M and N-N, 24590-PTF-P1-P01T-P0015
Section P-P and Q-Q, 24590-PTF-P1-P01T-P0016
Section R-R, 24590-PTF-P1-P01T-P0017

Figure 4A-79 Waste Management Areas Pretreatment - Plan at El. 28'

Figure 4A-79 has been deleted. Waste management areas are identified on the following general arrangement plan and section drawings (Attachment 51, Appendix 8.4):
General arrangement plan 24590-PTF-P1-P01T-P0002
Section A-A, 24590-PTF-P1-P01T-P0007
Section B-B, 24590-PTF-P1-P01T-P0008
Section C-C, 24590-PTF-P1-P01T-P0009
Section D-D, 24590-PTF-P1-P01T-P0010
Section E-E, 24590-PTF-P1-P01T-P0011
Section F-F and G-G, 24590-PTF-P1-P01T-P0012
Section H-H and J-J, 24590-PTF-P1-P01T-P0013
Section L-L and K-K, 24590-PTF-P1-P01T-P0014
Section M-M and N-N, 24590-PTF-P1-P01T-P0015
Section P-P and Q-Q, 24590-PTF-P1-P01T-P0016
Section R-R, 24590-PTF-P1-P01T-P0017

Figure 4A-82 Waste Management Areas LAW - Plan at El. -21'

Figure 4A-82 has been deleted. Waste management areas are identified on the following general arrangement plan and section drawings (Attachment 51, Appendix 9.4):
General arrangement plan 24590-LAW-P1-P01T-P0001
Section A-A, B-B, and C-C, 24590-LAW-P1-P01T-P0007
Section D-D, E-E, and F-F, 24590-LAW-P1-P01T-P0008
Section G-G, H-H, and J-J, 24590-LAW-P1-P01T-P0009
Section K-K and L-L, 24590-LAW-P1-P01T-P0010

Figure 4A-83 Waste Management Areas LAW - Plan at El. 3'

Figure 4A-83 has been deleted. Waste management areas are identified on the following general arrangement plan and section drawings (Attachment 51, Appendix 9.4)
General arrangement plan 24590-LAW-P1-P01T-P0002
Section A-A, B-B, and C-C, 24590-LAW-P1-P01T-P0007
Section D-D, E-E, and F-F, 24590-LAW-P1-P01T-P0008
Section G-G, H-H, and J-J, 24590-LAW-P1-P01T-P0009
Section K-K and L-L, 24590-LAW-P1-P01T-P0010

Figure 4A-86 Waste Management Areas HLW - Plan at El. -21'

Figure 4A-86 has been deleted. Waste management areas are identified on the following general arrangement plan and section drawings (Attachment 51, Appendix 10.4):
General arrangement plan 24590-HLW-P1-P01T-P0001
Section A-A, B-B, and C-C, 24590-HLW-P1-P01T-P0008
Section D-D, E-E, and F-F, 24590-HLW-P1-P01T-P0009
Section G-G and H-H, 24590-LAW-P1-P01T-P0010
Section J-J and K-K, 24590-LAW-P1-P01T-P0011

Figure 4A-87 Waste Management Areas HLW - Plan at El. 0'

Figure 4A-87 has been deleted. Waste management areas are identified on the following general arrangement plan and section drawings (Attachment 51, Appendix 10.4):
General arrangement plan 24590-HLW-P1-P01T-P0002
Section A-A, B-B, and C-C, 24590-HLW-P1-P01T-P0008
Section D-D, E-E, and F-F, 24590-HLW-P1-P01T-P0009
Section G-G and H-H, 24590-LAW-P1-P01T-P0010
Section J-J and K-K, 24590-LAW-P1-P01T-P0011

Figures 4A-90 through 4A-106 have been deleted consistent with DOE direction to remove unnecessary references to radionuclides (DOE letter 03-ED-047 dated April4, 2003).

Figure 4A-90 Contamination/Radiation Area Boundaries Pretreatment - Plan at El. -45'

Figure 4A-91 Contamination/Radiation Area Boundaries Pretreatment - Plan at El. 0'

Figure 4A-92 Contamination/Radiation Area Boundaries Pretreatment - Plan at El. 28'

Figure 4A-93 Contamination/Radiation Area Boundaries Pretreatment - Plan at El. 56'

Figure 4A-94 Contamination/Radiation Area Boundaries Pretreatment - Plan at El. 77'

Figure 4A-95 Contamination/Radiation Area Boundaries Pretreatment - Plan at El. 98'

Figure 4A-96 Contamination/Radiation Area Boundaries LAW - Plan at El. -21'

Figure 4A-97 Contamination/Radiation Area Boundaries LAW - Plan at El. 3'

Figure 4A-98 Contamination/Radiation Area Boundaries LAW - Plan at El. 22'

Figure 4A-99 Contamination/Radiation Area Boundaries LAW - Plan at El. 28'

Figure 4A-100 Contamination/Radiation Area Boundaries LAW - Plan at El. 48'

Figure 4A-101 Contamination/Radiation Area Boundaries HLW - Plan at El. -21'

Figure 4A-102 Contamination/Radiation Area Boundaries HLW - Plan at El. 0'

Figure 4A-103 Contamination/Radiation Area Boundaries HLW - Plan at El. 11'

Figure 4A-104 Contamination/Radiation Area Boundaries HLW - Plan at El. 30'

Figure 4A-105 Contamination/Radiation Area Boundaries HLW - Plan at El. 49'

Figure 4A-106 Contamination/Radiation Area Boundaries HLW - Plan at El. 62'

Figure 4A-107 Analytical Laboratory Main Level General Arrangement

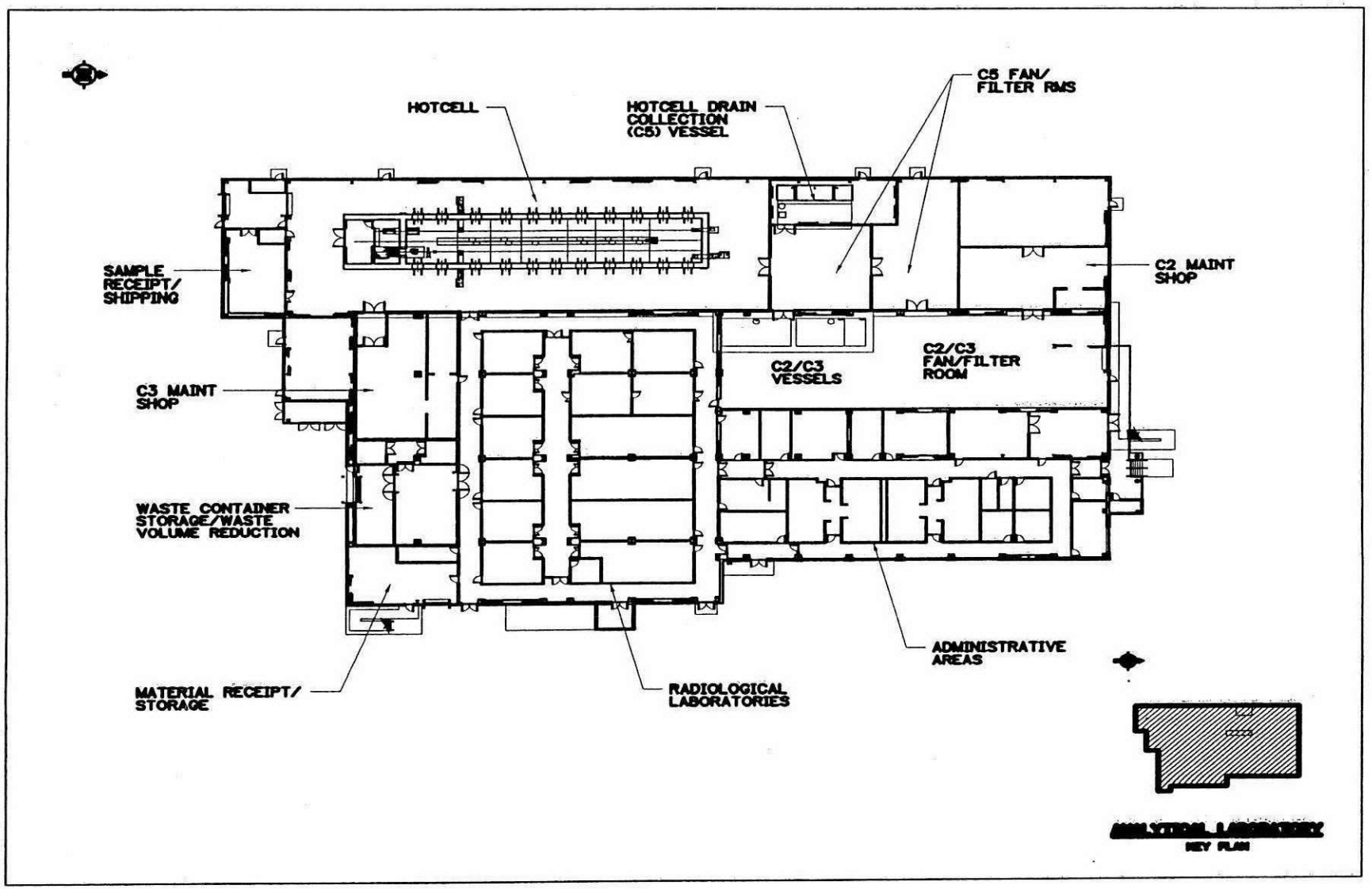

Figure 4A-108 Analytical Laboratory Main Level General Arrangement (Office Area)

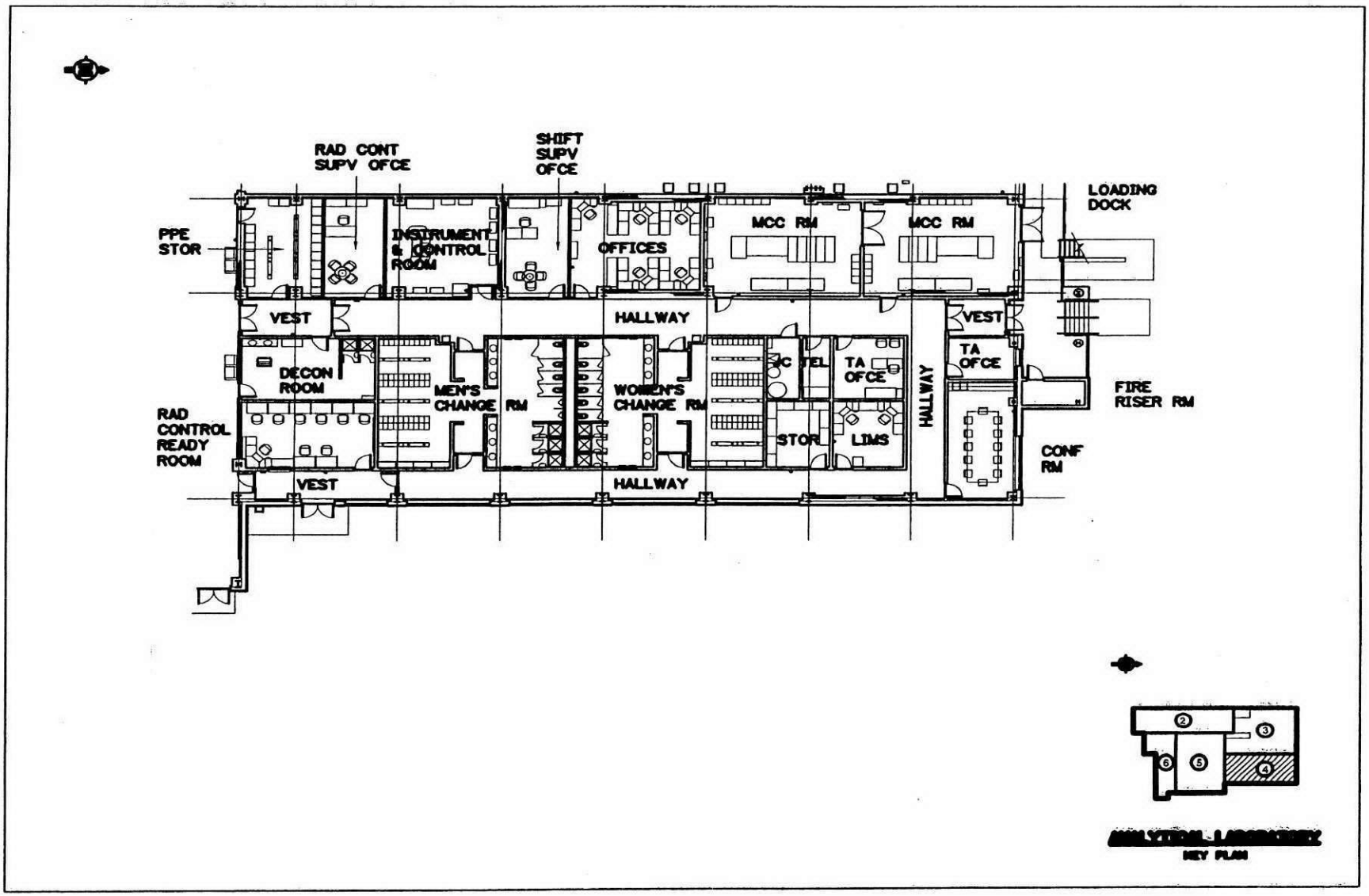

Figure 4A-109 Analytical Laboratory Second Level General Arrangement

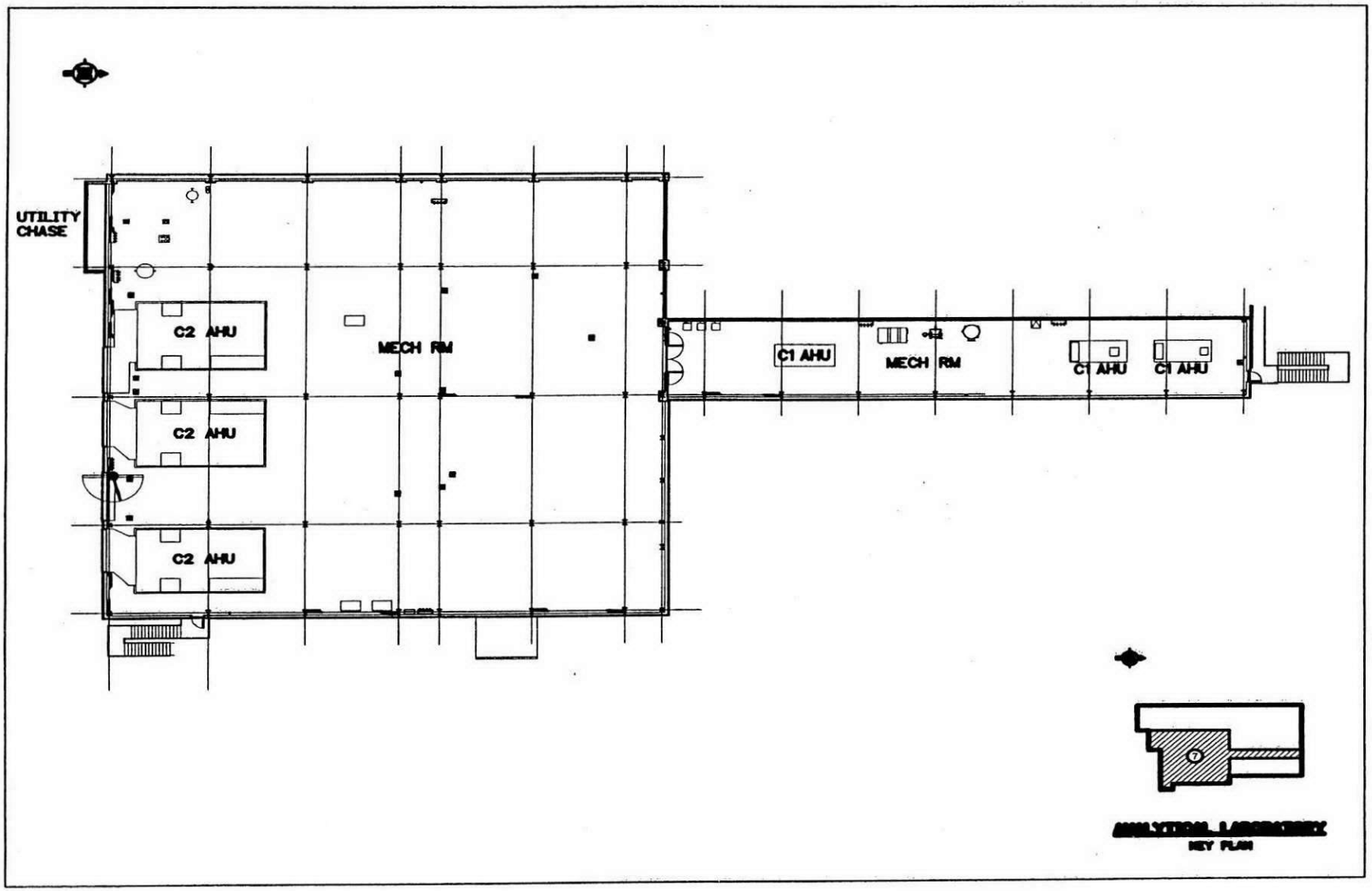

Figure 4A-110 Analytical Laboratory Below Grade Level General Arrangement (Tank Systems)

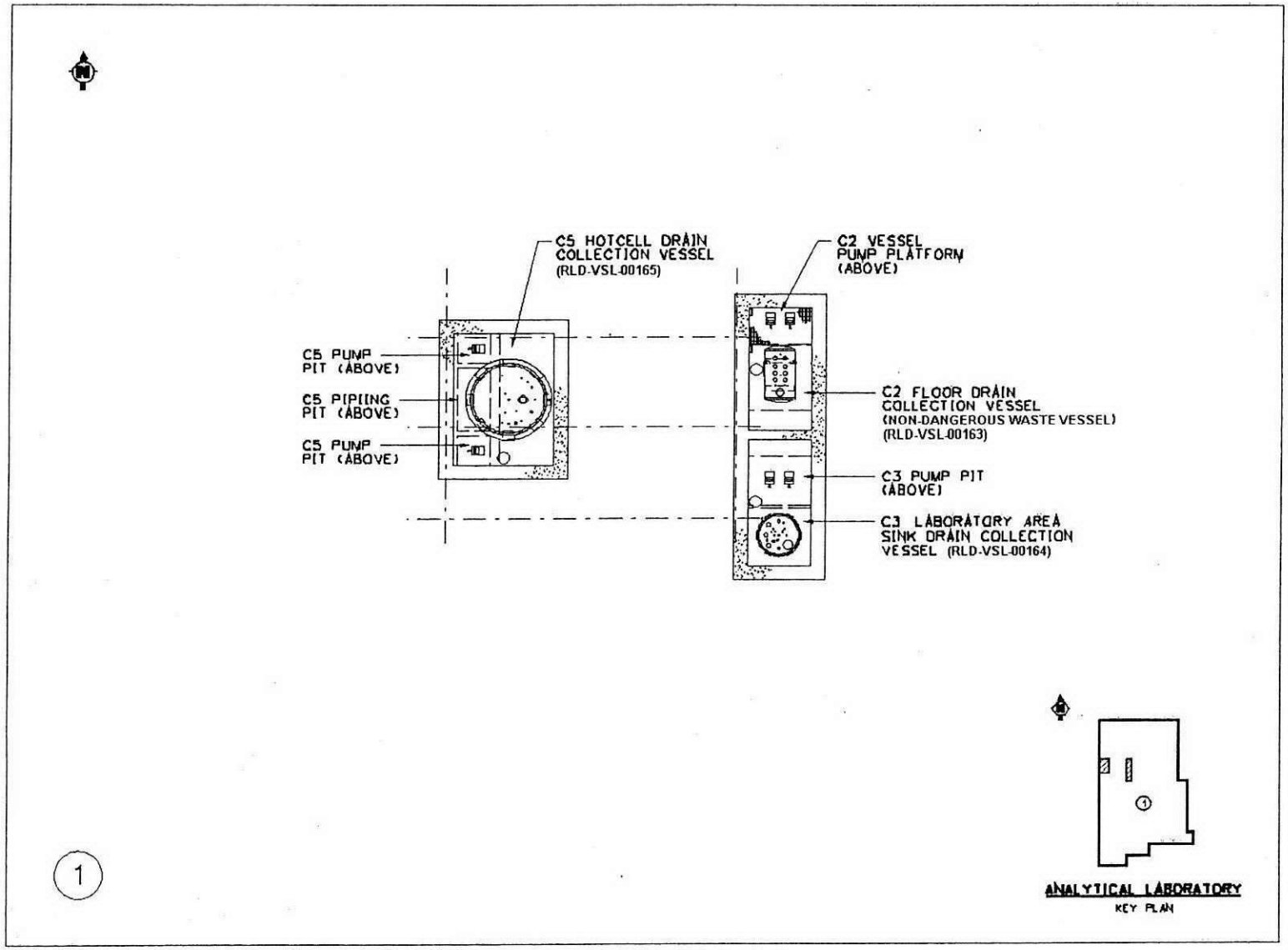

Figure 4A-111 Simplified Analytical Laboratory Process and Ventilation Flow Diagram

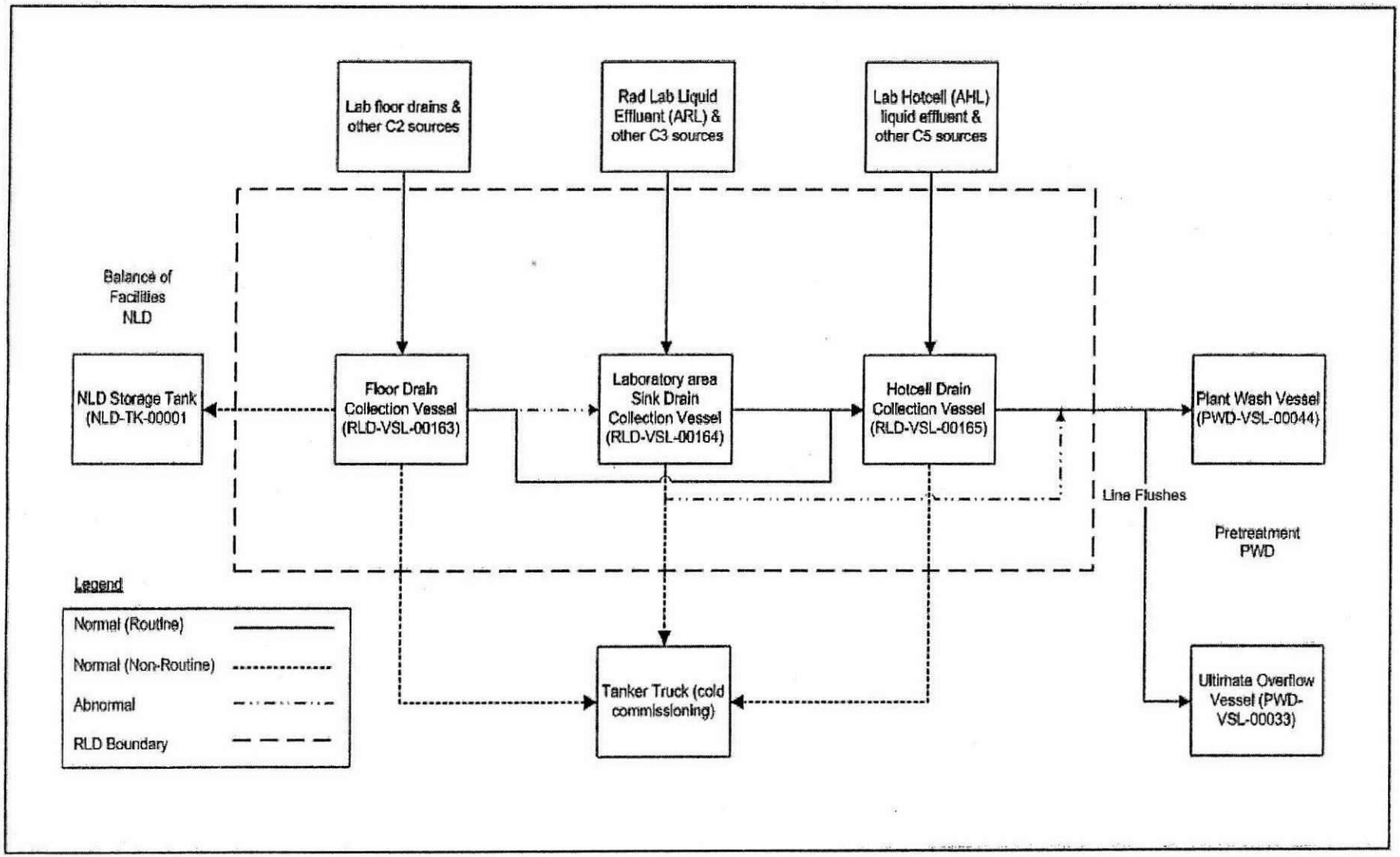

Figure 4A-112 Analytical Laboratory Main Level General Arrangement (Rad Labs)

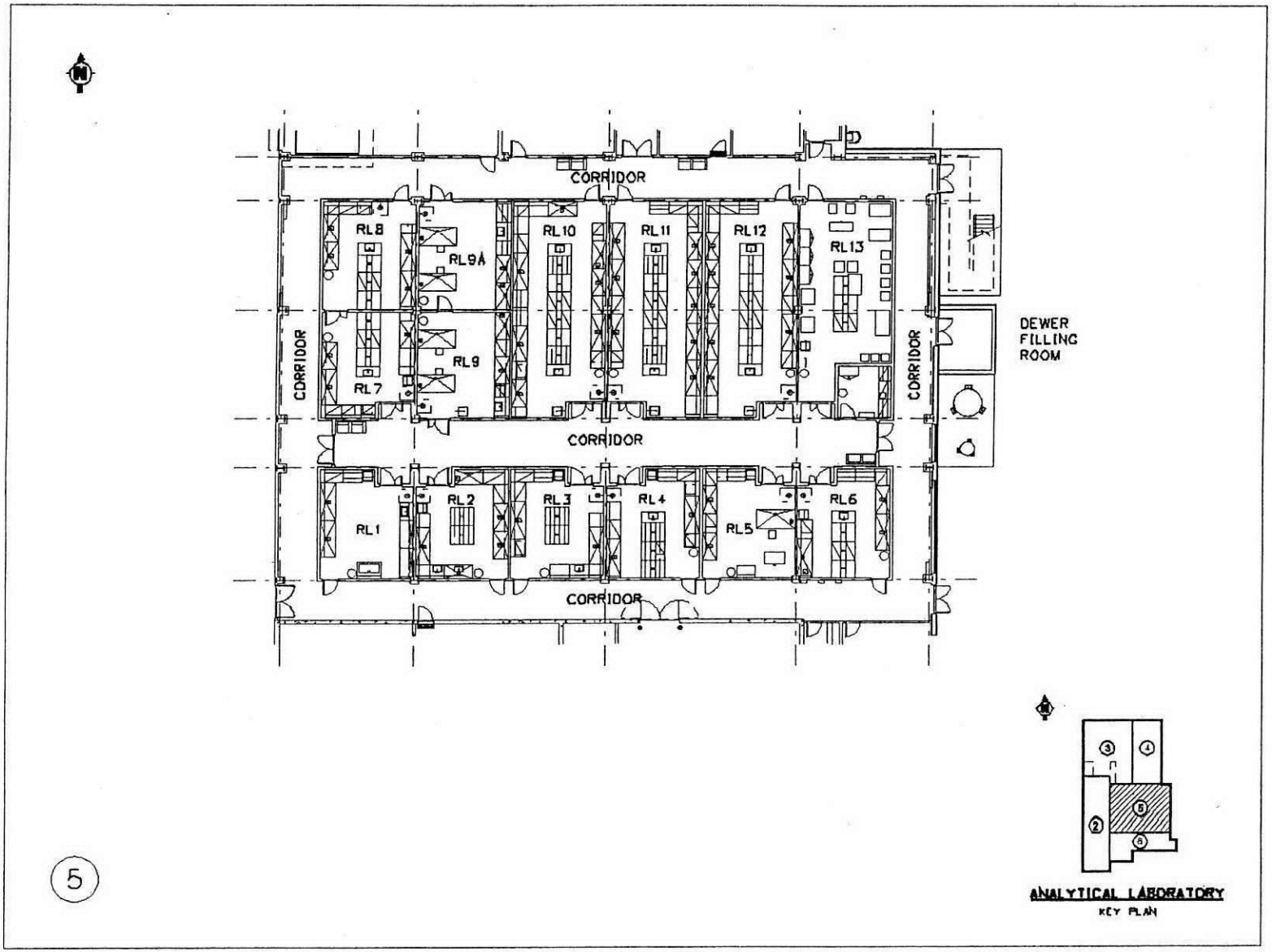

Figure 4A-112 (cont.)

Proposed RAD LAB Utilization

LAB – RL1	Sample Receipt
LAB – RL2	Dissolution / Dilution
LAB – RL3	Distillation / Titration
LAB – RL4	Standard / Reagent Prep
LAB – RL5	Process Technology (X-Ray)
LAB – RL6	Process Technology (FT-IR)
LAB – RL7	Process Technology (Particle Size)
LAB – RL8	Process Technology
LAB – RL9	Elemental Analysis
LAB – RL9A	Elemental Analysis
LAB – RL10	General Chemistry
LAB – RL11	Radionuclide Prep
LAB – RL12	Radionuclide Prep
LAB – RL13	Radionuclide Counting
LAB	Rad Control Counting Room

Figure 4A-113 Analytical Laboratory Main Level General Arrangement (Hot Cells)

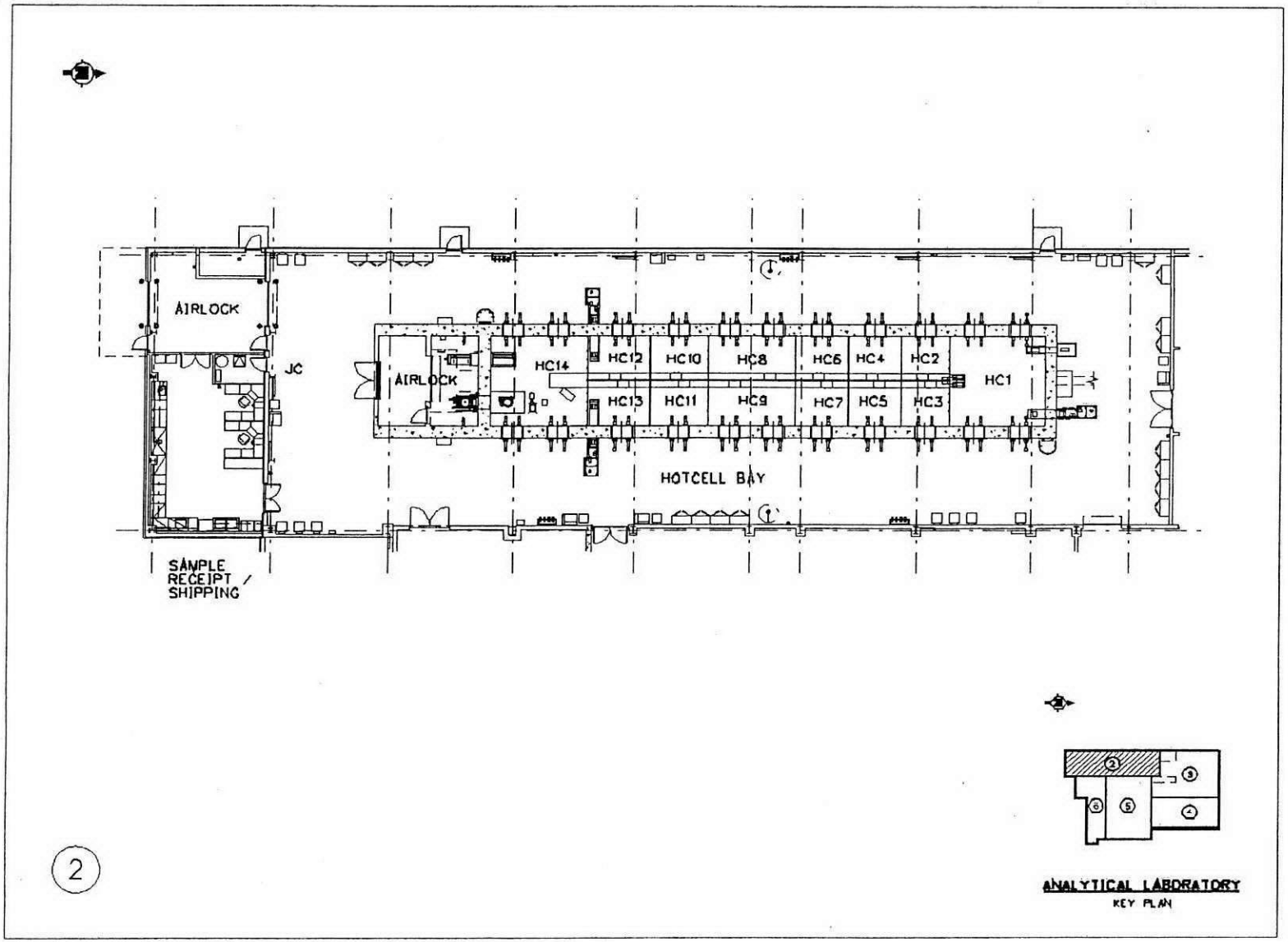

Figure 4A-113 (cont.)

Proposed HOTCELL Utilization

Hotcell – HC1	Sample Receipt / Sample Export
Hotcell – HC2	Sample Prep
Hotcell – HC3	Sample Prep
Hotcell – HC4	Glass Prep
Hotcell – HC5	Particle Size / Rheology
Hotcell – HC6	Dissolution / Dilution
Hotcell – HC7	Dissolution / Dilution
Hotcell – HC8	Radionuclide Prep
Hotcell – HC9	Radionuclide Prep
Hotcell – HC10	Ion Chrom & TIC/TOC Prep
Hotcell – HC11	Boildown
Hotcell – HC12	ICP Prep / Sample Export
Hotcell – HC13	ICP Prep / Sample Export
Hotcell – HC14	Waste Packaging / Volume Reduction

Figure 4A-114 Analytical Laboratory Main Level General Arrangement (Waste Management Area)

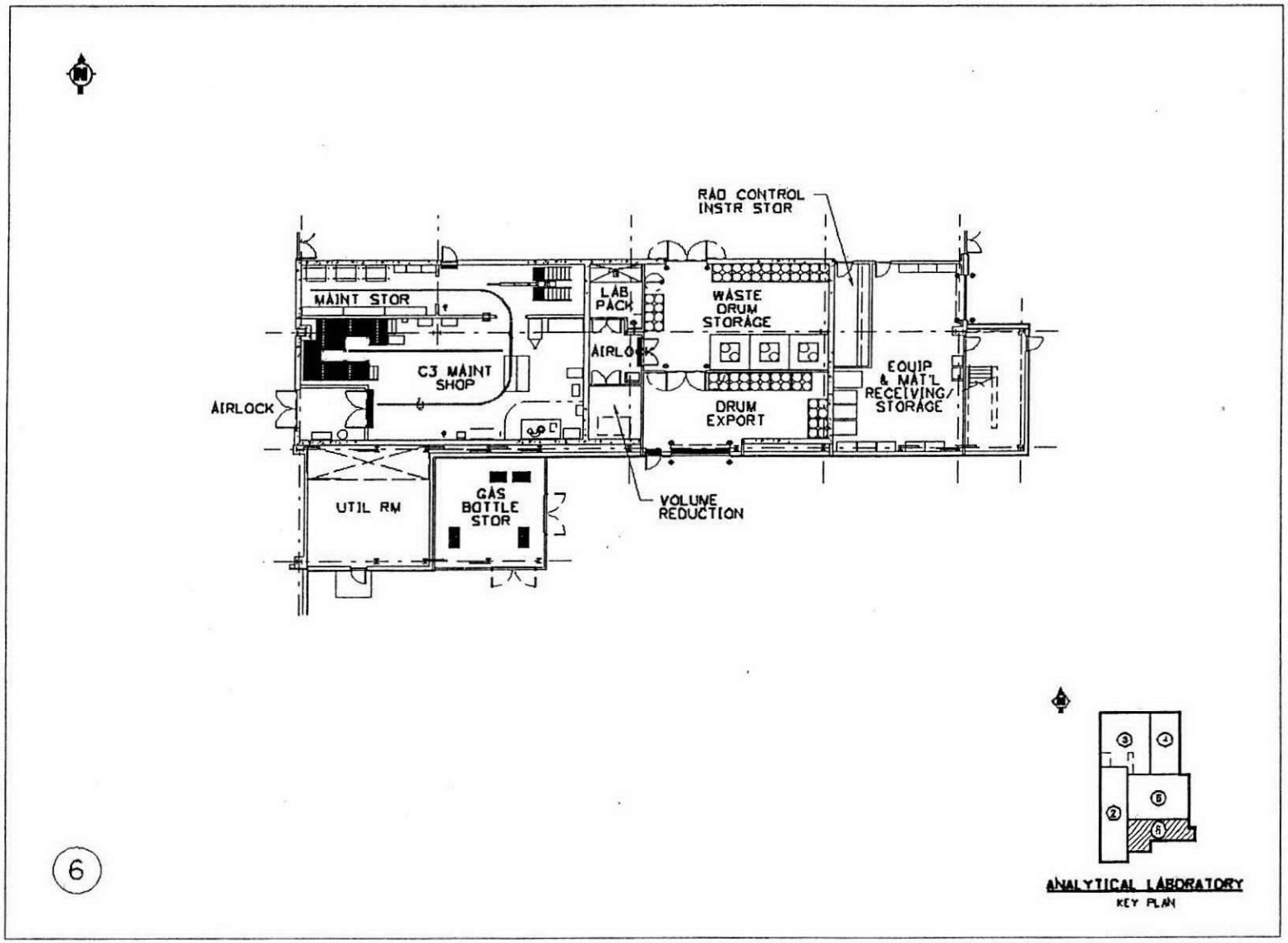

Figure 4A-115 Analytical Laboratory Simplified Process Flow Diagram (RLD)

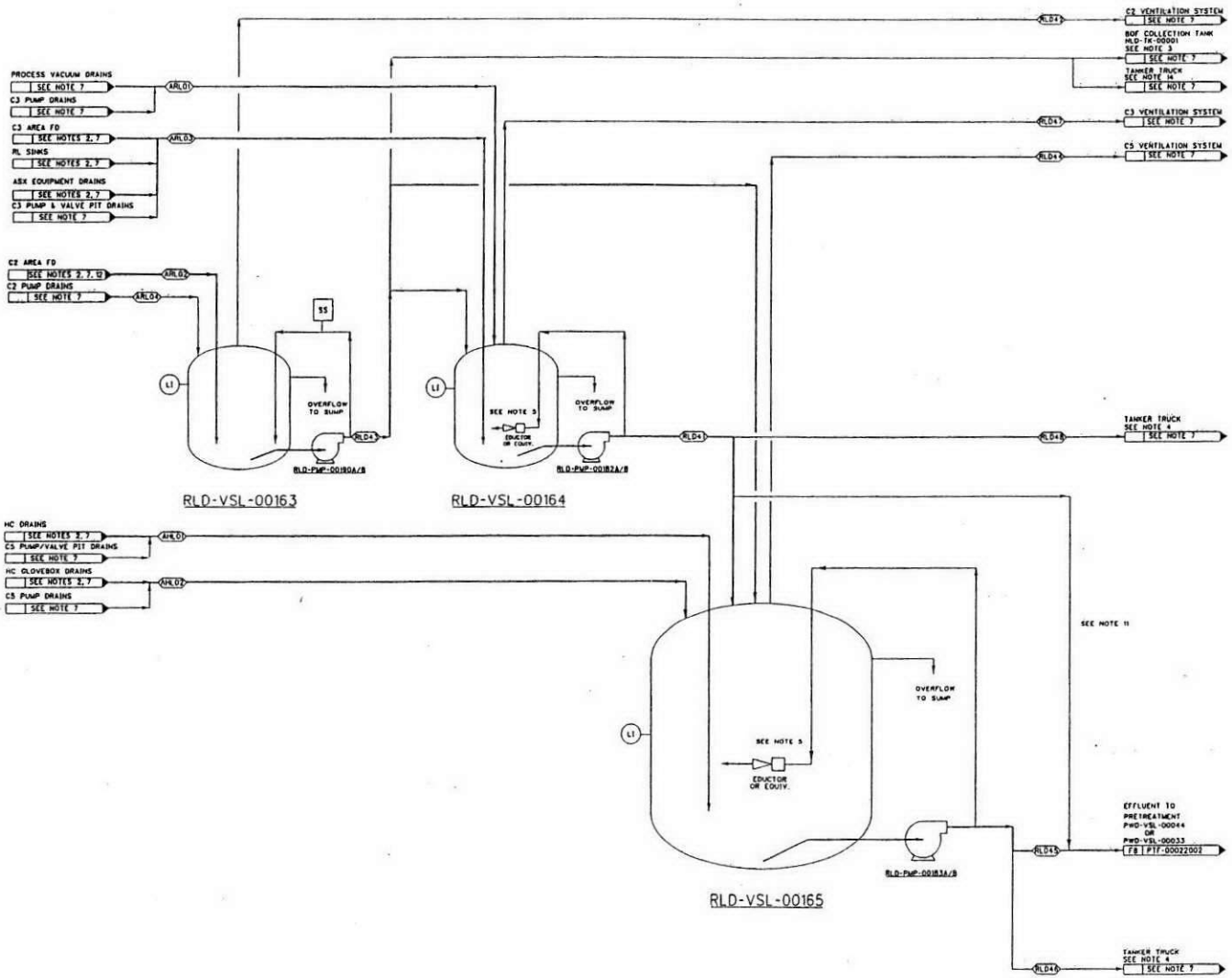

Figure 4A-116 Analytical Laboratory Simplified HVAC Description

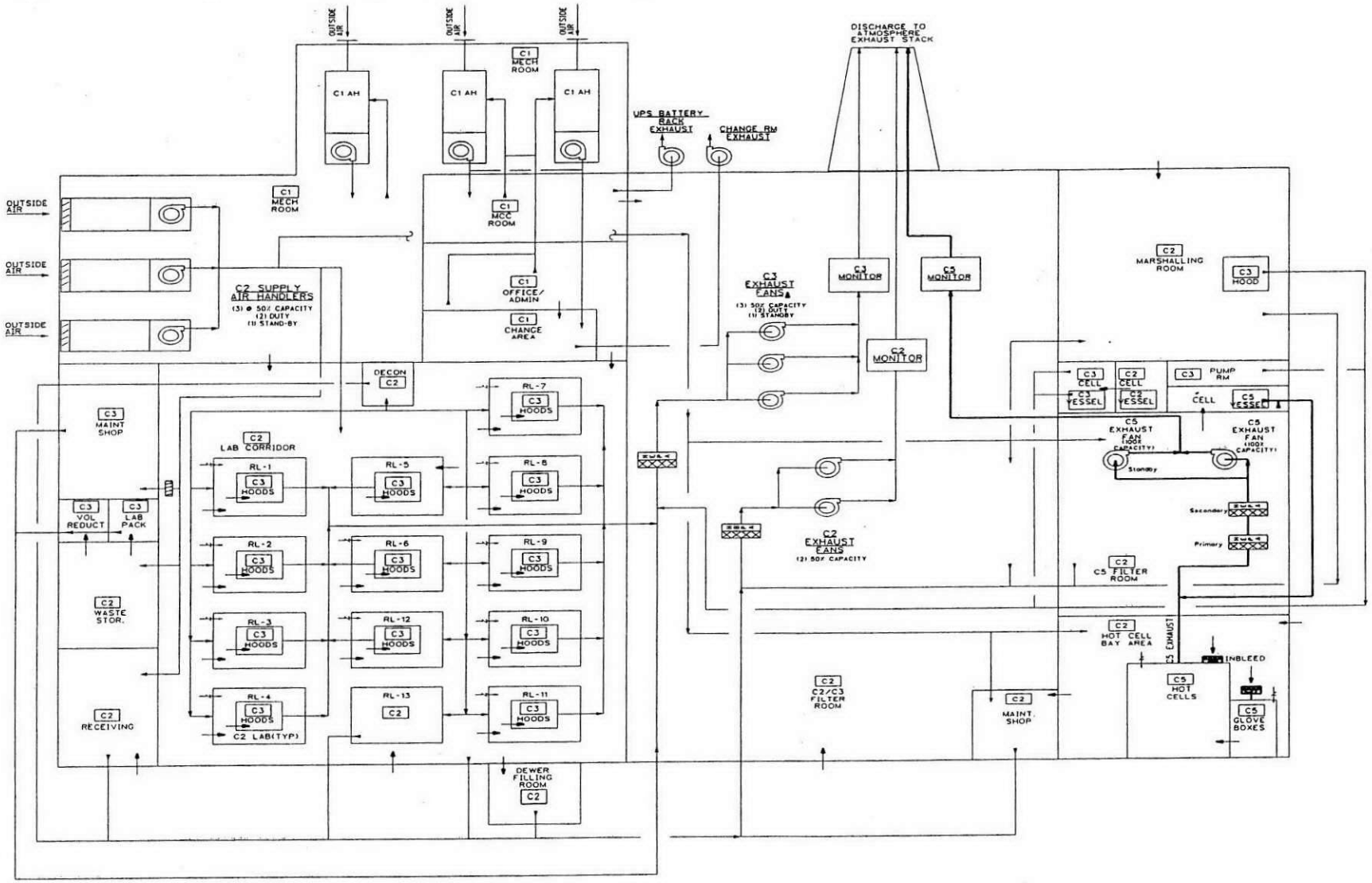

Figure 4A-117 Analytical Laboratory Main Level General Arrangement (Filter/Fan Rooms)

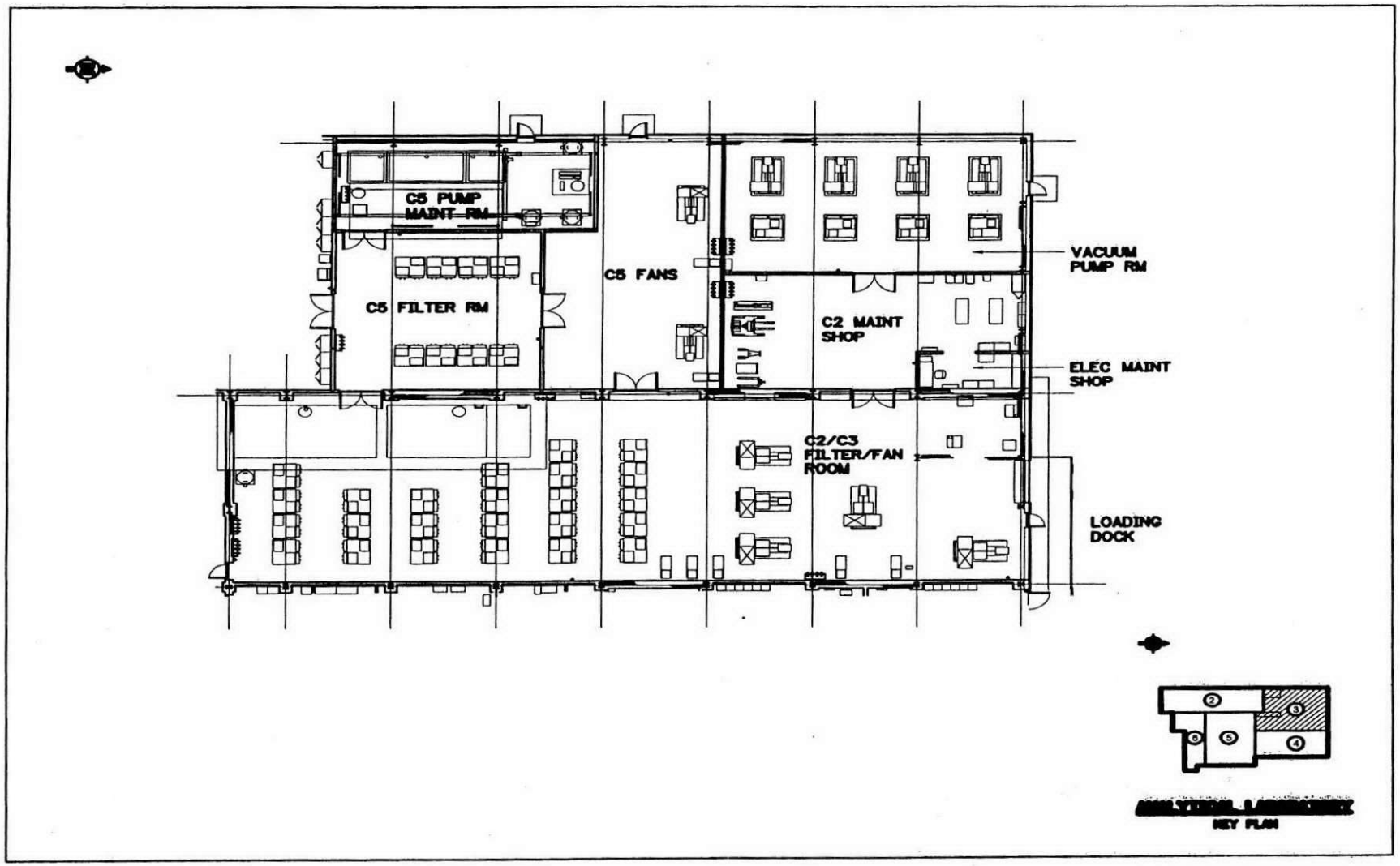

Figure 4A-125 Typical Dry (Type I) Sump

Figure 4A-125 has been deleted and superseded by:

24590-WTP-PER-CSA-02-001, *Secondary Containment Design* (Attachment 51, Appendix 7.5)
24590-PTF-PER-M-02-006, *Sump Data for PT Facility* (Attachment 51, Appendix 8.5)
24590-LAW-PER-M-02-001, *LAW Facility Sump Data* (Attachment 51, Appendix 9.8)
24590-HLW-PER-M-02-001, *HLW Facility Sump Data* (Attachment 51, Appendix 10.5)

Figure 4A-126 Typical Wet (Type II) Sump

Figure 4A-126 has been deleted since the WTP will not contain wet (Type II) sumps

Figure 4A-128 Simplified Process Flow Figure - Pretreatment Pulse Jet Ventilation System (PJV)

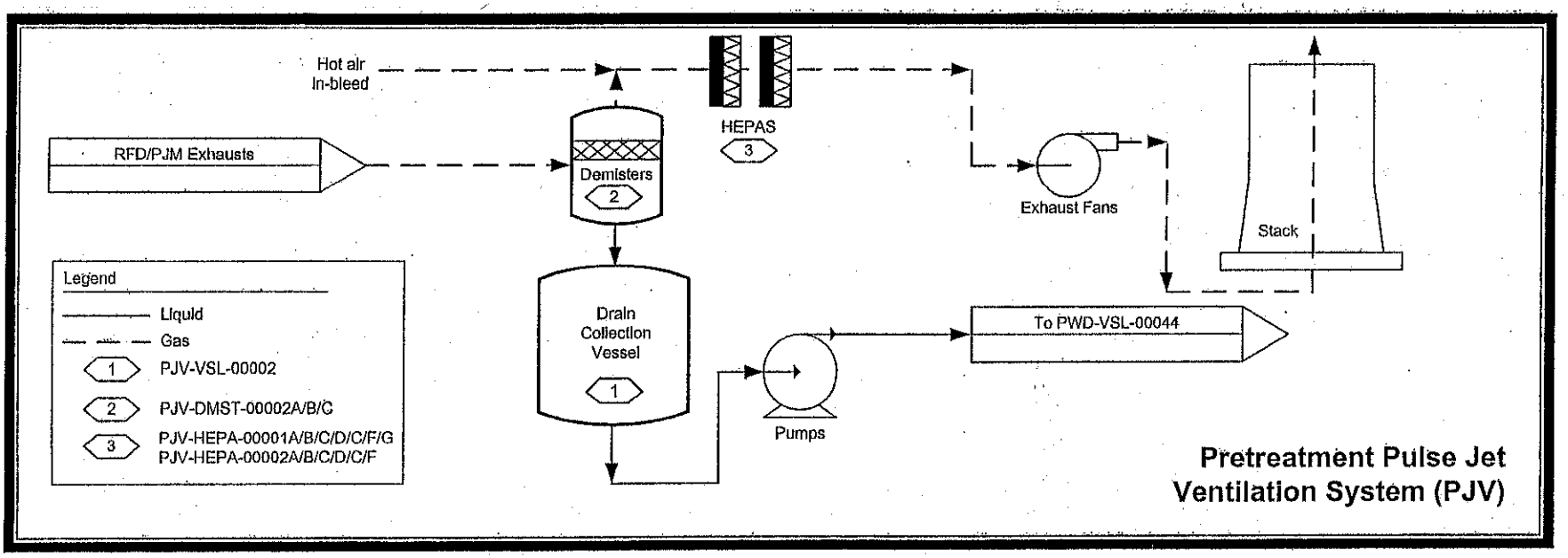

Figure 4A-129 Simplified Process Flow Figure - Sodium Hydroxide Reagent System (SHR)

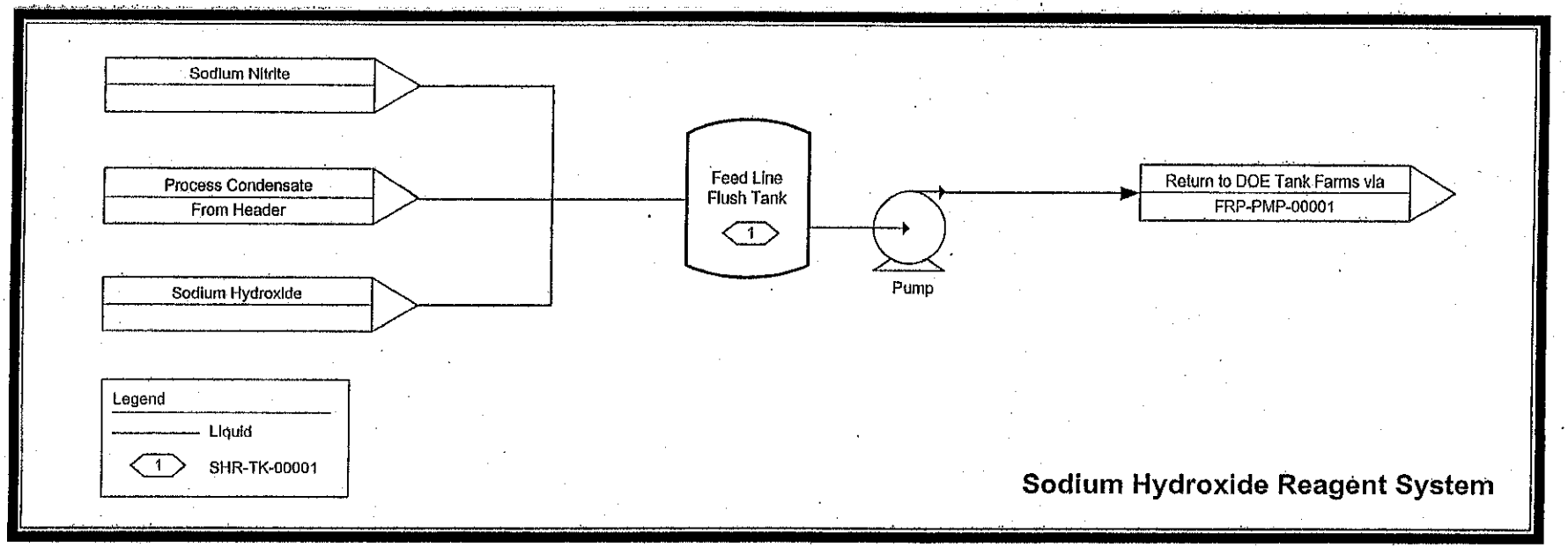

Appendix 6A
Inspection Schedules

APPENDIX 6A
INSPECTION SCHEDULES

Contents

1.0 Inspection Schedules 51-6A-1

Tables

Table 6A-1 Example of WTP General Inspection Schedule 51-6A-3

Table 6A-2 Example Container and Container Storage Area Inspection Schedules 51-6A-4

Table 6A-3 Example Tank Systems Inspection Schedule 51-6A-5

Table 6A-4 Example Cathodic Protection Inspection Schedule - Dangerous Waste Transfer Lines 51-6A-11

Table 6A-5 Example Ignitable or Reactive Wastes Inspection Schedule 51-6A-11

Table 6A-6 Example Miscellaneous Unit Inspection Schedule 51-6A-12

Table 6A-7 Example Containment Buildings Inspection Schedule 51-6A-12

INSPECTION SCHEDULES

This section provides example WTP inspection schedules showing inspection frequencies and what to look for. These example inspection schedules list the monitoring equipment, safety and emergency equipment, security devices, preparedness and prevention equipment, and operating and structural equipment that help prevent, detect, or respond to environmental or human health hazards related to mixed and dangerous waste. A copy of the current and complete inspection schedules will be retained at the WTP or other approved locations.

Table 6A-1 contains examples of the general inspection requirements. The remaining tables are organized by type of waste management unit. Following is a list of tables and their locations included in this Appendix.

1

Table 6A-1 Example WTP General Inspection Schedule

Component Name	Inspection	Frequency
Security Devices		
WTP inner fence	Check for damaged fencing	Monthly
Posted warning signs (see section 6.1.1.3) that say: "DANGER - UNAUTHORIZED PERSONNEL KEEP OUT" (or equivalent)	Verify signs are present, legible from a distance of 25 ft, and visible; ensure buildings or rooms containing dangerous or mixed waste are posted	Monthly
Points of access to active portions turnstiles, doors, and/or magnetic encoded bar readers	Verify operability	Monthly
Emergency Preparedness Equipment		
Safety showers and eyewash stations	Verify operability and sufficient pressure	Weekly
Automatic fire suppression system(s)	Verify operability	Annually
Portable fire extinguishers (all types)	Check for adequate charge	Monthly
Emergency lighting	Test operability	Monthly
Spill kit and spill control equipment	Verify contents complete	Quarterly
Emergency sirens and alarms	Verify operability	Monthly
Voice paging system (pagers or PA system)	Verify operability	Monthly
Crash alarm telephone system	Verify operability	Monthly
Emergency telephones	Verify operability	Monthly
Personal protective clothing and equipment	Ensure supplies meet ERP listing and requirements	Quarterly
Power Supply Inspections		
Emergency uninterruptible power supply system(s)	Verify operability	Annual
Emergency diesel generator	Perform no-load test and verify sufficient fuel	Annual

2

1

Table 6A-2 Example Container and Container Storage Area Inspection Schedules

Name	Inspection	Frequency
Dangerous and/or Mixed Waste Container Storage Areas		
• HLW Vit Plant canister storage cave East corridor El. 0 ft, loading area, swabbing and monitoring area • Non-radioactive dangerous waste container storage area • Failed melter storage facility • Laboratory waste management area	Verify major risk labels present and legible, ensure all containers closed (except when waste is being added to container); Check that container storage areas are free of liquid and debris; Check for significant cracks, gaps, and other signs of deterioration of storage area floors; Verify minimum 30 inches of aisle space between containers rows; Ensure that any containers holding free liquids have portable secondary containment and no liquids accumulated in portable secondary containment	Weekly
Immobilized HLW and LAW Containers		
Empty LAW containers and HLW canisters for immobilized waste	Inspect container for liquid or debris inside, cracks, dents, bulges, gouges, or other abnormalities	Prior to filling
Filled IHLW canisters and ILAW containers	Inspect (by camera surveillance or cell window) each container for cracks, leaks, bulges, or other abnormalities	After sealing container
	Record in tracking system each container's location when placed in storage; Record in tracking system all container location changes if container(s) are moved while in storage; Verify container in recorded location when transporting container out of WTP storage	Within 48 hours of placing or moving each container
HLW Vitrification Plant's Container Storage Area		
IHLW canister storage area (H-0132)	Visually check for liquid, foreign material, or debris in storage area; Check for deformities in storage area floors	Weekly when facility is storing waste in immobilized waste container storage area

2
3

1

Table 6A-3 Example Tank Systems Inspection Schedule

Component Name	Plant item number	Inspection	Frequency
Pretreatment Plant Tank System			
FRP			
Waste feed receipt vessels	FRP-VSL-00002A FRP-VSL-00002B FRP-VSL-00002C FRP-VSL-00002D	Inspect tank level monitoring data to prevent overflow	Daily
FEP			
Waste feed evaporator feed vessels	FEP-VSL-00017A FEP-VSL-00017B	Inspect tank level monitoring data to prevent overflow	Daily
LAW feed evaporator condensate vessel	FEP-VSL-00005	Inspect tank level monitoring data to prevent overflow	Daily
HLP			
HLW lag storage vessel	HLP-VSL-00027A HLP-VSL-00027B	Inspect tank level monitoring data to prevent overflow	Daily
HLW feed receipt vessel	HLP-VSL-00022	Inspect tank level monitoring data to prevent overflow	Daily
HLW feed blending vessel	HLP-VSL-00028	Inspect tank level monitoring data to prevent overflow	Daily
UFP			
Ultrafiltration feed preparation vessels	UFP-VSL-00001A UFP-VSL-00001B	Inspect tank level monitoring data to prevent overflow	Daily
Ultrafiltration feed vessels	UFP-VSL-00002A UFP-VSL-00002B	Inspect tank level monitoring data to prevent overflow	Daily
Ultrafilter permeate vessel	UFP-VSL-00062A UFP-VSL-00062B UFP-VSL-00062C	Inspect tank level monitoring data to prevent overflow	Daily

Table 6A-3 Example Tank Systems Inspection Schedule

Component Name	Plant item number	Inspection	Frequency
Ultrafilters	UFP-FILT-00001A UFP-FILT-00001B UFP-FILT-00002A UFP-FILT-00002B UFP-FILT-00003A UFP-FILT-00003B	Inspect tank level monitoring data to prevent overflow	Daily
CXP			
Cesium ion exchange feed vessel	CXP-VSL-00001	Inspect tank level monitoring data to prevent overflow	Daily
Cesium ion exchange columns	CXP-IXC-00001 CXP-IXC-00002 CXP-IXC-00003 CXP-IXC-00004	Inspect column monitoring data to prevent release	Daily
Cesium reagent vessel	CXP-IXC-00005	Inspect tank level monitoring data to prevent overflow	Daily
Cesium ion exchange caustic rinse collection vessel	CXP-VSL-00004	Inspect tank level monitoring data to prevent overflow	Daily
Cesium ion exchange treated LAW collection vessels	CXP-VSL-00026A CXP-VSL-00026B CXP-VSL-00026C	Inspect tank level monitoring data to prevent overflow	Daily
CNP			
Cesium evaporator eluate lute pot	CNP-VSL-00001	Inspect tank level monitoring data to prevent overflow	Daily
Cesium evaporator recovered nitric acid vessel	CNP-VSL-00004	Inspect tank level monitoring data to prevent overflow	Daily
Eluate contingency storage vessel	CNP-VSL-00003	Inspect tank level monitoring data to prevent overflow	Daily
PVP			
Vessel ventilation HEME drain collection vessel	PVP-VSL-00001	Inspect tank level monitoring data to prevent overflow	Daily

Table 6A-3 Example Tank Systems Inspection Schedule

Component Name	Plant item number	Inspection	Frequency
PJV			
PJV HEME drain collection vessel	PJV-VSL-00002	Inspect tank level monitoring data to prevent overflow	Daily
PWD			
Ultimate overflow vessel	PWD-VSL-00033	Inspect tank level monitoring data to prevent overflow	Daily
Plant wash vessel	PWD-VSL-00044	Inspect tank level monitoring data to prevent overflow	Daily
Acid/alkaline effluent vessel	PWD-VSL-00015	Inspect tank level monitoring data to prevent overflow	Daily
Acid/alkaline effluent vessel	PWD-VSL-00016	Inspect tank level monitoring data to prevent overflow	Daily
C3 floor drains collection vessel	PWD-VSL-00046	Inspect tank level monitoring data to prevent overflow	Daily
HLW effluent transfer vessel	PWD-VSL-00043	Inspect tank level monitoring data to prevent overflow	Daily
TLP			
Treated LAW evaporator condensate vessel	TEP-VSL-00002	Inspect tank level monitoring data to prevent overflow	Daily
LAW SBS condensate receipt vessel	TLP-VSL-00009A TLP-VSL-00009B	Inspect tank level monitoring data to prevent overflow	Daily
TCP			
Treated LAW concentrate storage vessel	TCP-VSL-00001	Inspect tank level monitoring data to prevent overflow	Daily
RDP			
Spent resin slurry vessels	RDP-VSL-00002A RDP-VSL-00002B RDP-VSL-00002C	Inspect tank level monitoring data to prevent overflow	Daily

Table 6A-3 Example Tank Systems Inspection Schedule

Component Name	Plant item number	Inspection	Frequency
SHR			
Feed line flush tank	SHR-TK-00009	Inspect tank level monitoring data to prevent overflow	Daily
RLD			
Process condensate vessels	RDP-TK-00006A RDP-TK-00006B	Inspect tank level monitoring data to prevent overflow	Daily
Alkaline effluent vessels	RLD-VSL-00017A RLD-VSL-00017B	Inspect tank level monitoring data to prevent overflow	Daily
PIH			
Decontamination soak tank	PIH-TK-00001	Inspect tank level monitoring data to prevent overflow	Daily
LAW Vitrification Plant Tank System			
LCP			
Melter 1 concentrate receipt vessel	LCP-VSL-00001	Inspect tank level monitoring data to prevent overflow	Daily
Melter 2 concentrate receipt vessel	LCP-VSL-00002	Inspect tank level monitoring data to prevent overflow	Daily
LFP			
Melter 1 feed preparation vessel	LFP-VSL-00001	Inspect tank level monitoring data to prevent overflow	Daily
Melter 1 feed vessel	LFP-VSL-00002	Inspect tank level monitoring data to prevent overflow	Daily
Melter 2 feed preparation vessel	LFP-VSL-00003	Inspect tank level monitoring data to prevent overflow	Daily

Table 6A-3 Example Tank Systems Inspection Schedule

Component Name	Plant item number	Inspection	Frequency
Melter 2 feed vessel	LFP-VSL-00004	Inspect tank level monitoring data to prevent overflow	Daily
LVP			
LAW caustic collection tank	LVP-TK-00001	Inspect tank level monitoring data to prevent overflow	Daily
LOP			
Melter 1 SBS condensate vessel	LOP-VSL-00001	Inspect tank level monitoring data to prevent overflow	Daily
Melter 2 SBS condensate vessel	LOP-VSL-00002	Inspect tank level monitoring data to prevent overflow	Daily
RLD			
Plant wash vessel	RLD-VSL-00003	Inspect tank level monitoring data to prevent overflow	Daily
C3/C5 drains/sump collection vessel	RLD-VSL-00004	Inspect tank level monitoring data to prevent overflow	Daily
SBS condensate collection vessel	RLD-VSL-00005	Inspect tank level monitoring data to prevent overflow	Daily
HLW Vitrification Plant Tank System			
HCP			
Concentrate receipt vessel 1	HCP-VSL-00001	Inspect tank level monitoring data to prevent overflow	Daily
Concentrate receipt vessel 2	HCP-VSL-00002	Inspect tank level monitoring data to prevent overflow	Daily

Table 6A-3 Example Tank Systems Inspection Schedule

Component Name	Plant item number	Inspection	Frequency
HOP			
SBS condensate receiver vessel 1	HOP-VSL-00903	Inspect tank level monitoring data to prevent overflow	Daily
SBS condensate receiver vessel 2	HOP-VSL-00904	Inspect tank level monitoring data to prevent overflow	Daily
HDH			
Canister decon vessel	HDH-VSL-00002	Inspect tank level monitoring data to prevent overflow	Daily
Canister decon vessel	HDH-VSL-00004	Inspect tank level monitoring data to prevent overflow	Daily
Waste neutralization vessel	HDH-VSL-00003	Inspect tank level monitoring data to prevent overflow	Daily
Canister rinse bogie decon vessel	HDH-VSL-00001	Inspect tank level monitoring data to prevent overflow	Daily
RLD			
Acidic waste vessel	RLD-VSL-00007	Inspect tank level monitoring data to prevent overflow	Daily
Plant wash and drains vessel	RLD-VSL-00008	Inspect tank level monitoring data to prevent overflow	Daily
Offgas drains collection vessel	RLD-VSL-00002	Inspect tank level monitoring data to prevent overflow	Daily
HFP			
Feed preparation vessel	HFP-VSL-00001	Inspect tank level monitoring data to prevent overflow	Daily
Feed preparation vessel	HFP-VSL-00005	Inspect tank level monitoring data to prevent overflow	Daily
HLW melter feed vessel	HFP-VSL-00002	Inspect tank level monitoring data to prevent overflow	Daily

Table 6A-3 Example Tank Systems Inspection Schedule

Component Name	Plant item number	Inspection	Frequency
HLW melter feed vessel	HFP-VSL-00006	Inspect tank level monitoring data to prevent overflow	Daily
HSH			
Decontamination tank melter cave 1	HSH-TK-00001	Inspect tank level monitoring data to prevent overflow	Daily
Decontamination tank melter cave 2	HSH-TK-00002	Inspect tank level monitoring data to prevent overflow	Daily
Analytical Laboratory Tank System			
LAB			
Laboratory area sink drain collection vessel	RLD-VSL-00164	Inspect tank level monitoring data to prevent overflow	Daily
Hot cell drain collection vessel	RLD-VSL-00165	Inspect tank level monitoring data to prevent overflow	Daily
Plant Sumps as identified in Chapter 4: Leak Detection for Primary Containment			
Leak detectors located in secondary containment for all tank systems, container storage areas, miscellaneous units, and containment buildings managing dangerous and/or mixed waste	Monitor leak detection instrumentation or monitoring data to detect leaks	Daily	
Underground Piping (receiving from DST and transferring out)			
Leak detectors	Monitor leak detection instrumentation or monitoring data to detect leaks	Daily	

Table 6A-4 Example Cathodic Protection Inspection Schedule-Dangerous Waste Transfer Lines

Component Name and Line Number	Inspection	Frequency
Cathodic protection systems for dangerous and mixed waste transfer lines	Verify proper operation	• Initial (less than 6 months after installation) • Annually (from date of initial installation inspection, above)
All sources of impressed current supporting cathodically protected dangerous and mixed waste transfer lines	Test for proper function	Bi-monthly

Table 6A-5 Example Ignitable or Reactive Wastes Inspection Schedule

Component Name	Inspection	Frequency
Receipt tanks	Inspect, by qualified personnel or in the presence of fire marshal, for compliance with Uniform Fire Code and enter inspection into operating record	365 days
Containers and container storage areas storing ignitable or reactive waste	Inspect, by professional person or in the presence of fire marshal for compliance with Uniform Fire Code and enter inspection into operating record. Inspect containers and container storage areas for compliance with WAC 173-303-630(8) requirements.	365 days

1

Table 6A-6 Example Miscellaneous Treatment Unit Inspection Schedule

Component Name	Plant Item Number	Inspection	Frequency
Pretreatment Facility Miscellaneous Treatment Unit Systems			
TLP			
Treated LAW evaporator separator vessel	TLP-SEP-00001	Inspect vessel level monitoring data to prevent overflow	Daily
Reboiler	TLP-RBLR-00001	TBD	TBD
Primary condenser	TLP-COND-00001	TBD	TBD
Inter-condenser	TLP-COND-00003	TBD	TBD
After-condenser	TLP-COND-00002	TBD	TBD
HEPA filter	TLP-HEPA-00001	TBD	TBD
FEP			
Waste feed evaporator separator vessels	FEP-SEP-00001A FEP-SEP-00001B	TBD	TBD
Reboilers	FEP-RBLR-00001A FEP-RBLR-00001B	TBD	TBD
Primary condensers	FEP-COND-00001A FEP-COND-00001B	TBD	TBD
Inter-condensers	FEP-COND-00002A FEP-COND-00002B	TBD	TBD
After-condensers	FEP-COND-00003A FEP-COND-00003B	TBD	TBD
PJV			
HEPA filters	PJV-HEPA-00003A PJV-HEPA-00003B	TBD	TBD
Primary HEPA filters	PJV-HEPA-00001A PJV-HEPA-00001B PJV-HEPA-00001C PJV-HEPA-00001D PJV-HEPA-00001E PJV-HEPA-00001F PJV-HEPA-00001G	TBD	TBD
Secondary HEPA filters	PJV-HEPA-00001A PJV-HEPA-00001B PJV-HEPA-00001C PJV-HEPA-00001D PJV-HEPA-00001E PJV-HEPA-00001F PJV-HEPA-00001G	TBD	TBD

Table 6A-6 Example Miscellaneous Treatment Unit Inspection Schedule

Component Name	Plant Item Number	Inspection	Frequency
Electric heaters	PJV-HTR-00001A PJV-HTR-00001B	TBD	TBD
Air in-bleed filters	PJV-FILT-00001A PJV-FILT-00001B	TBD	TBD
Exhaust fans	PJV-FAN-00001A PJV-FAN-00001B PJV-FAN-00001C	TBD	TBD
Demisters	PJV-DMST-00002A PJV-DMST-00002B PJV-DMST-00002C	TBD	TBD
PVP			
Electric heaters	PVP-HTR-00001A PVP-HTR-00001B PVP-HTR-00001C	TBD	TBD
After-cooler	PVP-CLR-00001	TBD	TBD
Carbon bed adsorbers	PVP-ABS-00001A PVP-ABS-00001B	TBD	TBD
VOC oxidizer unit	PVP-OXID-00001	TBD	TBD
Adsorber outlet filters	PVP-FILT-00001A PVP-FILT-00001B	TBD	TBD
HEME filters	PVP-HEME-00001A PVP-HEME-00001B PVP-HEME-00001C	TBD	TBD
HEPA filters	PVP-HEPA-00001A PVP-HEPA-00001B PVP-HEPA-00001C PVP-HEPA-00023 PVP-HEPA-00024 PVP-HEPA-00028 PVP-HEPA-00029 PVP-HEPA-00030 PVP-HEPA-00031 PVP-HEPA-00032 PVP-HEPA-00033 PVP-HEPA-00034 PVP-HEPA-00035	TBD	TBD
Caustic scrubber	PVP-SCB-00002	TBD	TBD
PVV			
HEPA filters	PVV-HEPA-00002A PVV-HEPA-00002B PVV-HEPA-00002C	TBD	TBD

Table 6A-6 Example Miscellaneous Treatment Unit Inspection Schedule

Component Name	Plant Item Number	Inspection	Frequency
Exhaust fans	PVV-FAN-00001A PVV-FAN-00001B	TBD	TBD
CNP			
Separator Vessel	CNP-EVAP-00001	TBD	TBD
Cesium evaporator concentrate reboiler	CNP-HX-00001	TBD	TBD
Cesium nitric acid rectifier column	CNP-DISTC-00001	TBD	TBD
Cesium evaporator primary condenser	CNP-HX-00002	TBD	TBD
Cesium evaporator secondary condenser	CNP-HX-00003	TBD	TBD
Cesium evaporator after-condenser	CNP-HX-00004	TBD	TBD
HEPA filter	CNP-HEPA-00006	TBD	TBD
LAW Vitrification Plant Miscellaneous Treatment Unit Subsystems			
LMP			
LAW melters	LMP-MLTR-00001 LMP-MLTR-00002	• Visual inspection (via cave window or CCTV if provided) for damage, leaks, or abnormalities • Inspect melter level monitoring data to prevent overflow	Daily
LOP			
Melter 1 and melter 2 submerged bed scrubbers	LOP-SCB-00001 LOP-SCB-00002	TBD	TBD
Melter 1 and melter 2 wet electrostatic precipitators	LOP-WESP-00001 LOP-WESP-00002	TBD	TBD
Primary/secondary film coolers	LOP-FCLR-00001 LOP-FCLR-00002 LOP-FCLR-00003 LOP-FCLR-00004	TBD	TBD

Table 6A-6 Example Miscellaneous Treatment Unit Inspection Schedule

Component Name	Plant Item Number	Inspection	Frequency
LVP			
Caustic scrubber	LVP-SCB-00001	TBD	TBD
HEPA filters	LVP-HEPA-00001A LVP-HEPA-00001B LVP-HEPA-00002A LVP-HEPA-00002B	TBD	TBD
Selective catalytic oxidizer	LVP-SCO-00001	TBD	TBD
Selective catalytic reduction units	LVP-SCR-00001 LVP-SCR-00002	TBD	TBD
Electric heaters	LVP-HTR-00001A LVP-HTR-00001B LVP-HTR-00002 LVP-HTR-00003A LVP-HTR-00003B	TBD	TBD
Heat exchangers	LVP-HX-00001	TBD	TBD
LAW stack		TBD	TBD
Adsorber	LVP-ADBR-00001	TBD	TBD
Exhausters	LVP-EXHR-00001A LVP-EXHR-00001B LVP-EXHR-00001C	TBD	TBD
HLW Vitrification Plant Miscellaneous Treatment Unit Subsystems			
HMP			
HLW melters	HMP-MLTR-00001 HMP-MLTR-00002	• Visual inspection (via cave window or CCTV if provided) for damage, leaks, or abnormalities • Inspect melter level monitoring data to prevent overflow	Daily
HOP			
Submerged bed scrubber	HOP-SCB-00001 HOP-SCB-00002	TBD	TBD
Wet electrostatic precipitators	HOP-WESP-00001 HOP-WESP-00002	TBD	TBD
Air ejector induced siphon	Located on HOP-SCB-00001 and HOP-SCB-00002	TBD	TBD

Table 6A-6 Example Miscellaneous Treatment Unit Inspection Schedule

Component Name	Plant Item Number	Inspection	Frequency
Offgas organic oxidizers	HOP-SCO-00001 HOP-SCO-00004	TBD	TBD
NOx selective catalytic reducers	HOP-SCR-00001 HOP-SCR-00002	TBD	TBD
Silver mordenite columns	HOP-ABS-00002 HOP-ABS-00003	TBD	TBD
HEPA filters	HOP-HEPA-00001A HOP-HEPA-00001B HOP-HEPA-00002A HOP-HEPA-00002B HOP-HEPA-00007A HOP-HEPA-00007B HOP-HEPA-00008A HOP-HEPA-00008B	TBD	TBD
Film coolers	HOP-FCLR-00001 HOP-FCLR-00002	TBD	TBD
Heat exchangers	HOP-HX-00001 HOP-HX-00002 HOP-HX-00003 HOP-HX-00004	TBD	TBD
Catalyst skid electric heaters	HOP-HTR-00001B HOP-HTR-00002A HOP-HTR-00005A HOP-HTR-00005B	TBD	TBD
Extraction fans	HOP-FAN-00001A HOP-FAN-00001B HOP-FAN-00001C HOP-FAN-00008A HOP-FAN-00008B HOP-FAN-00008C HOP-FAN-00009A HOP-FAN-00009B HOP-FAN-00009C HOP-FAN-00010A HOP-FAN-00010B HOP-FAN-00010C	TBD	TBD
HLW stack		TBD	TBD
Activated carbon column	HOP-ADBR-00001A HOP-ADBR-00001B HOP-ADBR-00002A HOP-ADBR-00002B	TBD	TBD

Table 6A-6 Example Miscellaneous Treatment Unit Inspection Schedule

Component Name	Plant Item Number	Inspection	Frequency
High efficiency mist eliminators	HOP-HEME-00001A HOP-HEME-00001B HOP-HEME-00002A HOP-HEME-00002B	TBD	TBD
PJV			
HEPA filters	PJV-HEPA-00004A PJV-HEPA-00004B PJV-HEPA-00005A PJV-HEPA-00005B	TBD	TBD
Electric heater	PJV-HTR-00002	TBD	TBD
Pulse jet fans	PJV-FAN-00002A PJV-FAN-00002B	TBD	TBD

Table 6A-7 Example Containment Buildings Inspection Schedule

Component Name	Inspection	Frequency
• Containment building areas as designated in Chapter 4	• Inspect and record in the operating record data gathered from monitoring equipment and leak detection equipment as well as the containment building and the area immediately surrounding the containment building to detect signs of releases of dangerous waste • High radiation areas - check differential pressure monitoring records to ensure negative pressure in containment building area	Weekly

Attachment 51 – Appendix 2.0
Critical Systems for the WTP

Any procedure, method, data, or information contained in this document that relates solely to radionuclides or to the radioactive source, byproduct material, and/or special nuclear components of mixed waste (as defined by the Atomic Energy Act of 1954, as amended) is not provided for the purpose of regulating the radiation hazards of such components under the authority of this permit and Chapter 70.105 RCW.

Mnemonic System Locator	System Name
Pretreatment Systems	
PFH	Pretreatment Filter Cave Handling System
PJV	Pulse Jet Ventilation System
FRP	Waste Feed Receipt Process System
FEP	Waste Feed Evaporation Process System
TLP	Treated LAW Evaporation Process System
TCP	Treated LAW Concentrate Storage Process System
HLP	HLW Lag Storage and Feed Blending Process System
UFP	Ultrafiltration Process System
CXP	Cesium Ion Exchange Process System
CNP	Cesium Nitric Acid Recovery Process System
RDP	Spent Resin Collection and Dewatering Process System
PIH	Pretreatment In-Cell Handling System
RWH	Radioactive Solid Waste Handling System
RLD	Radioactive Liquid Waste Disposal System
PVP	Pretreatment Vessel Vent Process System
PWD	Plant Wash and Disposal System
PVV	Process Vessel Vent System
Low-Activity Waste Systems	
RWH	Radioactive Solid Waste Handling System
RLD	Radioactive Liquid Waste Disposal System
LCP	LAW Concentrate Receipt Process System
LFP	LAW Melter Feed Process System
LMP	LAW Melter Process System
LOP	LAW Primary Offgas Process System
LVP	LAW Secondary Offgas/Vessel Vent Process System
LSH	LAW Melter Equipment Support Handling System

Mnemonic System Locator	System Name
LPH	LAW Container Pour Handling System
LFH	LAW Container Finishing Handling System
High-Level Waste Systems	
PJV	Pulse-Jet Ventilation System
HCP	HLW Concentrate Receipt Process System
HFP	HLW Melter Feed Process System
HMP	HLW Melter Process System
HOP	Melter Offgas Treatment Process System
HSH	HLW Melter Cave Support Handling System
HFH	HLW Filter Cave Handling System
HPH	HLW Canister Pour Handling System
HDH	HLW Canister Decontamination Handling System
HMH	HLW Melter Handling System
PVV	Process Vessel Vent System
RWH	Radioactive Solid Waste Handling System
RLD	Radioactive Liquid Waste Disposal System
Balance of Facilities Systems	
RWH	Radioactive Solid Waste Handling System
RLD	Radioactive Liquid Waste Disposal System
Analytical Laboratory Systems	
RWH	Radioactive Solid Waste Handling System
RLD	Radioactive Liquid Waste Disposal System

Bechtel National, Inc. Certification

The following certification statement is provided consistent with Contract No. DE-AC27-01RV14136, Section H.26, Environmental Permits, paragraph (g) for the Hanford Tank Waste Treatment and Immobilization Plant Dangerous Waste Permit Class 2 Permit Modification Notification Form (24590-WTP PCN-ENV-04-001).

I certify under penalty of law that this document and all attachments were prepared under my direction or supervision in accordance with a system designed to assure that qualified personnel properly gather and evaluate the information submitted. Based on my inquiry of the person or persons who manage the system, or those persons directly responsible for gathering the information, the information submitted is, to the best of my knowledge and belief, true, accurate, and complete. I am aware that there are significant penalties for submitting false information, including the possibility of fine and imprisonment for knowing violations.

J. P. Henschel
Project Director

3/25/04
Date

U.S. Department of Energy, Office of River Protection
Certification

The following certification statement is provided for the Hanford Tank Waste Treatment and Immobilization Plant Dangerous Waste Permit Class 2 Permit Modification Notification Form (24590-WTP-PCN-ENV-04-001).

I certify under penalty of law that this document and all attachments were prepared under my direction or supervision in accordance with a system designed to assure that qualified personnel properly gather and evaluate the information submitted. Based on my inquiry of the person or persons who manage the system, or those persons directly responsible for gathering the information, the information submitted is, to the best of my knowledge and belief, true, accurate, and complete. I am aware that there are significant penalties for submitting false information, including the possibility of fine and imprisonment for knowing violations.

Roy J. Schepens

Roy J. Schepens, Manager
U.S. Department of Energy,
Office of River Protection

3/25/04
Date