9613449.0002 START 0002477

Rockwell Hanford Operations

SUPPORTING DOCUMENT

Number	Rev. Ltr./ Chg. No.	Page 1 of Total Page
SD-HS-SAR-010	Rev. 1	165

PROGRAM: Waste Management

Document Title:

Aging-Waste Facility
Safety Analysis Report

Baseline Document ☐ Yes ☐ No

WBS No. or Work Package No.
NX

Key Words:

Aging Waste, Double-Shell Tanks, PUREX, Safety Analysis, Tank Bump, Tank Leak

Prepared by (Name and Dept. No.)
D. R. Ellingson - Rockwell
J. K. Soldat - PNL

Date 6-83

See reverse side for additional approvals

THIS DOCUMENT IS FOR USE IN PERFORMANCE OF WORK UNDER CONTRACTS WITH THE U.S. DEPARTMENT OF ENERGY, ITS PERSONS OR FOR PURPOSES WITHIN THE SCOPE OF THESE CONTRACTS. DISSEMINATION OF ITS CONTENTS FOR ANY OTHER USE OR PURPOSE IS EXPRESSLY FORBIDDEN.

APPROVED FOR PUBLIC RELEASE 1-4-91 3-29-91

Abstract

This Safety Analysis Report addresses accidents that might occur during management of neutralized high level liquid waste (NHW) generated during initial (1983-1987) fuel dissolution campaigns undertaken following restart of the PUREX Facility. The NHW will be transferred to double-shell tanks especially equipped to handle the high heat generated during "aging" of the waste. Postulated accidents were based on the design and operation of the Aging-Waste Facility, characteristics of the waste, and past experience with management of high level liquid waste. Potential consequences of the accidents were maximized by assuming a schedule of fuel campaigns that maximized the heat generation rate in the waste and its curie content.

Two "worst case" accidents were examined in detail. The first was a tank "bump" accident, selected because of its potential for radiation doses to persons offsite. Analysis of this accident indicated that, based on the calculated offsite radiation doses to the maximum individual. The accident should be classed as a low hazard (first year dose ≤4 rem). The calculated first-year radiation doses to workers at the accident scene (≤75 rem) indicated that the accident should be classed as a moderate to high hazard. Based on the low accident probability (10^{-3}/yr), the risk was classed as "acceptable". The second accident was a postulated leak of waste through all three barriers, the primary and secondary tanks and the surrounding concrete, into the soil. This accident would not lead to offsite radiation exposure. It was selected for analysis based on its potential environmental impact (contamination of soil and contamination of ground water to levels below Federal Guides) and for its economic impact (loss of the use of an Aging Waste tank and cost of recovery and decontamination). The tank leak accident was classed as "moderate" based upon these two types of impacts.

Distribution	Name	Mail Address	
	U.S. Department of Energy Richland Operations Office		
*	R. E. Gerton	Fed Bldg	700
	G. J. Miskho	Fed Bldg	700
*	J. D. White	Fed Bldg	700
*	D. M. Smith	Fed Bldg	700
	Rockwell Hanford Operations		
*	J. F. Albaugh	2750E	200E
	D. E. Ball	MO-405	200E
*	M. L. Bell	2750E	200E
	D. A. Berg	2750E	200E
	D. E. Bihl	202S	200W
*	G. F. Boothe	202S	200W
	J. B. Bowers	2750E	200E
*	K. J. Cameron	2750E	200E
*	K. G. Carothers	2750E	200E
*	G. M. Christensen	2750E	200E
	J. L. Deichman	2101M	200E
*	J. F. Dickman	2750E	200E
*	G. T. Dukelow	2750E	200E
*	D. R. Ellingson	2750E	200E
*	M. R. Fox	2750E	200E
*	S. E. Freeman (2)	272AW	200E
*	R. B. Gelman	272AW	200E
*	A. W. Graves	2750E	200E
	D. J. Hart	202A	200E
*	A. R. Hawkins	MO-405	200E
	J. E. Kinzer	2750E	200E
*	B. E. Knight	2750E	200E

(Continued on reverse side)

*COMPLETE DOCUMENT
(No asterisk, title page/summary of revision page only)

Release Stamp

9212562111 41

7

Rockwell Hanford Operations

Page	Number
2	SD-HS-SAR-010

SUPPORTING DOCUMENT

Approvals

- [x] R. A. Zinsli — Program Office
- [x] [illegible] 6/3/83 — Research and Engineering
- [x] [illegible] 6/6/83 — Plant Operations
- [x] [illegible] 6/3/83 — Health, Safety and Environment
- [x] H. Spanheimer 6-3-83 — Quality Assurance
- [ ] Training
- [ ] End Function
- [ ] End Function
- [ ]
- [ ]
- [x] [illegible] — Health, Safety and Environment, Director
- [x] R. D. Pascoe 6-6-83 — Production/Processing, Director
- Waste Management Safety Committee Approv
- [x] M. J. Bell 6-3-83 — Approval Authority

* Distribution	Name	Mail Address	
*	J. H. Lawler	2750E	200E
*	R. Y. Lyon	2750E	200E
*	C. A. McGee	222-T	200W
	J. K. McClusky	MO-405	200E
	M. J. Oss	2750E	200E
*	D. Paine	222U	200W
*	K. J. Pascoe	2750E	200E
*	J. W. Patterson	2750E	200E
	J. A. Reid	2750E	200E
*	E. L. Richards	2101M	200E
	R. H. Rieck	271B	200E
	R. C. Roal	MO-405	200E
*	L. H. Rodgers	2750E	200E
*	J. H. Roecker	2750E	200E
	H. P. Shaw	2750E	200E
	H. Spanheimer	2750E	200E
*	R. C. Stupka	2750E	200E
*	R. W. Szempruch	271U	200W
*	S. R. Tifft	2101M	200E
	G. E. Wilbur	234-5	200W
	D. W. Wright	222T	200W
	L. L. Zahn, Jr.	MO-405	200E
*	R. A. Zinsli	2750E	200E
*	Safety Analysis Files(3)	2750E	200E
*	W. V. Baumgartner	2750E	200E
*	A. G. Pines	2750E	200E
	Pacific Northwest Laboratory		
*	J. K. Soldat, 2400 Stevens/3000		
*	S. L. Stein	RTL/3000	

9613449.0003

CLASSIFICATION/UCNI REVIEW

TO: Document Clearance/Processing and Distribution

SUBJECT: Review of [redacted] - SD-HS-SAR-010 R2 (ECN-103856)

for DOE - RL

☒ This document contains neither CLASSIFIED nor UCNI material.

☐ This document is CLASSIFIED at the following level and category and may not be released:

Level	Category
☐ Top Secret	☐ Restricted Data
☐ Secret	☐ Formerly Restricted Data
☐ Confidential	☐ National Security Information

☐ This document contains UCNI material and any release must be in accordance with DOE approved distribution lists.

(Authorized Derivative Classifier and Authorized Reviewing Official)

3/28/89
(Date)

Please submit this completed form and document for distribution to:

[redacted]

LOIS KNAPP L8-04

9213562140

A-6000-292 (07/88)

THIS PAGE INTENTIONALLY
LEFT BLANK

9613449.0004

SUMMARY OF REVISION		Number: SD- HS-SAR-010 Page 2.1
Rev. Ltr./ Chg. No.	Description Of Changes	Approvals / Date
Rev. 1	Major revision to document Incorporated resolutions to DOE-RL comments provided in Letter #22371. Other changes were recommended by Rockwell Hanford Operations reviewing activities and incorporated as improvements, but did not effect technical content or the Operations Safety Requirements. The distribution list was also updated. Total pages were 155 and are now 165.	1-4-84 Program Office 1/4/84 Research and Engineering 1/4/84 Plant Operations 1/4/84 Health, Safety and Environment 12/30/83 Quality Assurance 1-4-84 Production Processing, Director 1-4-84 Waste Management Safety Committee A Approval Authority Health, Safety and Environment, Director Approval Authority

Release Stamp	Release Stamp	Release Stamp
OFFICIAL RELEASE		

9212562111 43

THIS PAGE LEFT BLANK INTENTIONALLY.

9 2 1 2 5 6 2 1 1 4 4

9613449.0005

SD-HS-SAR-010
Rev. 1

AGING-WASTE FACILITY SAFETY ANALYSIS REPORT

W. V. Baumgartner
A. G. Pines
Safety Analysis Group
Rockwell Hanford Operations

J. K. Soldat
Radiological Sciences Department
Pacific Northwest Laboratory

December 1983

Prepared for the United States
Department of Energy
Under Contract DE-AC06-77RL01030

Rockwell International
Rockwell Hanford Operations
Energy Systems Group
Richland, Washington 99532

LEFT BLANK INTENTIONALLY

9 2 1 2 1 5 2 1 1 6

CONTENTS

1.0 Introduction 1-1
1.1 References 1-1

2.0 Summary Safety Analysis 2-1

3.0 Site Characteristics 3-1
3.1 Geography and Demography 3-1
3.2 Nearby Industrial, Transportation, and Military Facilities 3-1
3.3 Climatology and Meteorology 3-1
3.4 Geology and Hydrology 3-4
3.5 Seismology 3-4
3.6 References 3-5

4.0 Principal Design Criteria 4-1
4.1 Structural 4-1
4.2 Control 4-3
4.3 Administrative 4-4
4.4 References 4-5

5.0 Facility Description 5-1
5.1 Introduction 5-1
5.2 Waste Transfer Piping 5-1
5.2.1 Primary Piping 5-1
5.2.2 Backup Piping 5-5
5.2.3 Intertank Piping 5-6
5.3 Tanks 5-6
5.3.1 Primary Tank 5-11
5.3.2 Secondary Steel Tank 5-11
5.3.3 Insulating Slab 5-11
5.3.4 Welding and Stress-Relief 5-12
5.3.5 Reinforced Concrete Tank 5-12
5.4 Pump Pit and Sluice Pits 5-12
5.5 Tank Equipment 5-13
5.5.1 Process Air System 5-13
5.5.2 Heating Coil 5-18
5.6 Tank Instrumentation 5-18
5.6.1 Liquid Level 5-18
5.6.2 Sludge Level 5-19
5.6.3 Specific Gravity and Mass 5-19
5.6.4 Temperature Monitoring 5-19
5.6.5 Leak Detection 5-20
5.6.6 Pressure 5-21
5.6.7 Area Radiation Alarm Systems 5-21

5.7 Ventilation 5-21
5.7.1 702-A Primary Tank Ventilation System 5-21
5.7.2 702-A Backup Ventilation System 5-26
5.7.3 TK-241-AY-101 Annulus Exhaust System and 241-AY-102 Annulus Ventilation System 5-27
5.7.4 Combined TK-241-AZ-101 and -102 Annuli Ventilation System 5-27
5.8 Utilities and Services 5-28
5.8.1 Electrical System 5-28
5.8.2 Steam Supply and Distribution Systems 5-29
5.8.3 Water Supply Systems 5-29
5.8.4 Air Supply Systems 5-29
5.8.5 Communications and Alarm Systems 5-30
5.8.6 Fire Protection Systems 5-30
5.9 Site Surveillance Monitoring Systems 5-30
5.10 Comparison of Current Configuration with Current Criteria 5-30
5.11 References 5-32

6.0 Process Systems 6-1
6.1 Introduction 6-1
6.2 Waste Characterization 6-1
6.2.1 Fission Products Concentration 6-1
6.2.2 Plutonium Concentration 6-3
6.2.3 Other Transuranics Concentration 6-3
6.2.4 Hydrogen Formation and Accumulation 6-3
6.2.5 Heat Generation 6-7
6.2.6 Salt Concentration 6-7
6.2.7 NH_3 Concentration 6-10
6.2.8 Organics 6-10
6.2.9 Physical Properties 6-10
6.2.10 Vapor Phase Fission Product Content 6-10
6.3 Storage Tank Process 6-10
6.3.1 Storage Tank Operations 6-12
6.3.2 Storage Tank Process Equipment 6-12
6.4 Ventilation 6-13
6.4.1 Primary Ventilation System 6-13
6.4.2 Annulus Ventilation System 6-13
6.5 Process Effluents 6-14
6.5.1 Gaseous 6-14
6.5.2 Liquids 6-14
6.6 Discussion of Current Criteria 6-14
6.7 References 6-14

7.0 Waste Management and Confinement 7-1
7.1 Nonradioactive Wastes 7-1
7.2 Radioactive Wastes 7-1
7.2.1 Airborne Effluents 7-2
7.2.2 Liquid Effluents 7-5
7.2.3 Solid Effluents 7-6

7.3 Evaluation 7-6
7.3.1 Releases and Acceptability 7-6
7.3.2 Monitoring and Sampling Systems 7-6
7.3.3 Confinement Assurance 7-7
7.4 References 7-7

8.0 Radiation Protection 8-1
8.1 Occupational Radiation Exposures 8-1
8.1.1 Policy 8-1
8.1.2 Design 8-1
8.1.3 Operational Considerations 8-2
8.2 Onsite Administrative Control 8-3
8.2.1 Physical and Administrative Controls for Radiation Areas 8-4
8.2.2 Personnel Dosimetry 8-5
8.2.3 Portable Survey Instruments 8-5
8.2.4 Radiation Protection Training 8-6
8.2.5 Control of Airborne Radioactive Materials . . . 8-6
8.3 Offsite Administrative Control 8-7
8.4 Radiation Protection Design Features 8-8
8.4.1 Shielding 8-8
8.4.2 Ventilation 8-9
8.4.3 Instrumentation for Area Radiation and Airborne Radioactivity 8-9
8.5 Radioactive Sources and Doses. 8-9
8.5.1 Sources of Airborne Radioactive Material 8-9
8.5.2 Contained Radioactive Sources 8-10
8.5.3 Estimated Onsite Exposure During Normal Operations 8-10
8.5.4 Estimated Offsite Exposure During Normal Operations 8-10
8.6 References 8-13

9.0 Accident Safety Analysis 9-1
9.1 Hazards 9-1
9.2 Abnormal Occurrences 9-1
9.3 Accidents 9-1
9.3.1 Pipe Leak 9-19
9.3.2 Hydrogen Explosion and Dome Collapse 9-20
9.3.3 Tank Bump 9-21
9.3.4 Tank Leak 9-28
9.4 References 9-31

10.0 Conduct of Operations 10-1
10.1 Operating Organization 10-1
10.1.1 Tank Farm Processing Operations 10-1
10.1.2 Tank Farm Services 10-1
10.2 Preoperational Testing 10-2
10.3 Training 10-2
10.4 Normal Operations 10-3
10.5 Emergency Planning 10-3
10.6 References 10-3

11.0 Operations Safety Requirements 11-1
11.1 Introduction 11-1
11.2 Safety Limits and Limiting Control Settings 11-1
11.2.1 Tank Pressurization 11-1
11.3 Limiting Conditions for Operations 11-2
11.3.1 Equipment 11-2
11.3.2 Radiation and Environment 11-5
11.3.3 Process 11-9
11.4 Surveillance Requirements 11-13
11.4.1 Continuous Air Monitor Functional Tests 11-13
11.4.2 Steam Condensate Diverter Functional Tests . . . 11-13
11.4.3 HEPA Filter Efficiency Tests 11-14
11.5 Design Features 11-15
11.5.1 Radioactive Liquid Organic Waste 11-15
11.5.2 Continuous Operation 11-15
11.5.3 Review and Approval of Facility Modifications . 11-16
11.6 Administrative Controls 11-17
11.6.1 Operating Procedures 11-17
11.6.2 Radiation Work Procedures 11-18
11.6.3 Trained Personnel 11-19
11.6.4 Audits 11-20
11.6.5 Unusual Events 11-20
11.7 References 11-21

12.0 Quality Assurance 12-1
12.1 Organization 12-1
12.2 Quality Assurance Program 12-1
12.2.1 Level of Quality 12-1
12.2.2 Personnel Training 12-2
12.2.3 Design Control 12-2
12.2.4 Procedures and Instructions 12-2
12.2.5 Inspection and Test Control 12-3
12.2.6 Calibration and Control 12-3
12.2.7 Nonconformance, Corrective Action, and Surveillance 12-3
12.3 Quality Assurance Laboratory 12-4
12.4 References 12-4

TABLES:

2-1. Calculated Dose Commitment to the Onsite Individual Following a Tank Bump 2-1
2-2. Calculated Dose Commitment to the Maximum Individual on Highway 240 2-1
2-3. Calculated Dose Commitment to the Ringold Farmer 2-2
2-4. Calculated Dose Commitment to the Offsite Population 2-2
2-5. Calculated Risk Following a Tank Bump Accident 2-2
5-1. Routes of Primary Piping for PUREX NHW 5-5
5-2. Routes of Backup Piping for PUREX NHW 5-7
5-3. Routes of Intertank Piping 5-9
5-4. Condenser Design Parameters 5-24
6-1. Worst Case Fission Product Content of PUREX NHW After Concentration 6-2

6-2. Estimated Maximum Concentrations of Fission Products in the First Aging-Waste Tank 6-4
6-3. Estimated Maximum Concentrations of Fission Products in the Second Aging-Waste Tank 6-5
6-4. Maximum Heat Generation Rate in Aging-Waste Tanks . . . 6-8
7-1. Potential Concentrations of Selected Radionuclides in the Gaseous Effluents from 702-A System Under Normal Operation 7-2
7-2. Potential Releases of Radioactive Material to the Atmosphere Following Failure of 702-A Components 7-3
7-3. Potential Instantaneous Concentrations of Radionuclides in Gaseous Effluents Following Failure of 702-A Components 7-4
7-4. Potential 168-Hour-Average Concentrations in Gaseous Effluents Following Failure of 702-A Components 7-4
8-1. Occupational Radiation Dose Limits and Controls 8-3
8-2. Concentration Guides for Occupational Exposure to Airborne Radioactive Material 8-7
8-3. Fission Product Concentrations in Worst Case PUREX NHW 8-11
8-4. Maximum Fission Product Concentration in First Aging-Waste Tank 8-12
8-5. Radiation Exposure Rates Expected Above Pump and Sluice Pits While Worst Case PUREX NHW is Being Pumped 8-12
8-6. Radiation Exposure Rates Expected at the 241-AX-155 Diversion Box While Worst Case PUREX NHW is Being Transferred 8-13
9-1. Aging-Waste Facility Hazards Analysis 9-3
9-2. Waste Transfer Piping Hazards Analysis 9-5
9-3. Aging-Waste Storage Tanks Hazards Analysis 9-9
9-4. Support Systems Hazards Analysis 9-12
9-5 Projected Onsite Population in the Vicinity of 241-ZA-102 Tank 9-23
9-6. Estimated Distribution of Population Within a 50 Mile Radius of the 200 Area Hanford Meteorogical Tower by Population Grid Sector 1980 9-24
9-7. Calculated Dose Commitment to the Maximum Onsite Individual Following a Tank Bump Accident 9-24
9-8. Calculated Dose Commitment to the Individual on Highway 240 Following a Tank Bump Accident 9-25
9-9. Calculated Dose Commitment to a Hypothetical Ringold Farmer Following a Tank Bump Accident 9-25
9-10. Calculated Population Dose Commitment Following a Tank Bump Accident 9-26
9-11. Whole-Body Radiation Dose Commitments Corresponding to the Three Hazard Levels 9-27
9-12. Organ Radiation Dose Commitments Corresponding to the Three Hazard Levels 9-27
9-13. Calculated Risk Following a Tank Bump Accident 9-28
9-14. Estimated Time for Selected Radionuclides to Reach Ground Water 9-30

FIGURES:

3-1. Hanford Site 3-2
3-2. 200 Areas Processing and Waste Management Facilities . . 3-3
5-1. Layout--PUREX Waste Tank Farm Complex 5-2
5-2. Plot Plan--PUREX Primary and Secondary NWH Routings . . 5-3
5-2A. Detail--Aging-Waste Facility Waste Transfer Lines . . . 5-4
5-3. Bioling Waste Intertank Transfer Route 5-8
5-4. Vertical Section Through Double-Shell Tank 5-10
5-5. Schematic of the Compressed Air System for the Airlift Circulators 5-15
5-6. Composite Section--Aging-Waste Tank 5-16
5-7. Plan View--Airlift Circulators 5-17
5-8. Primary Tank Ventilation Schematic 5-23
6-1. Fission Product Concentrations in Aging-Waste Tanks as a Function of Time 6-6
6-2. Heat Generation Rate in Aging-Waste Tanks as a Function of Time 6-9
6-3. Distribution of Fission Products in Aging-Waste Tank at Time of Maximum Activity 6-12
9-1. Relationship of the Segments of the Aging-Waste Facility Reviewed for Potential Hazards 9-2
10-1. Tank Farm Operations Organizations 10-2

1.0 INTRODUCTION

Prior to 1967, high-level liquid wastes generated during fuel reprocessing operations were neutralized and sent to waste storage tanks. From 1967 through 1972 wastes generated in the waste concentration and treatment cycle in the Plutonium-Uranium Extraction (PUREX) Plant were sent to the AR Vault and then to the Waste Fractionation Facility for strontium and cesium removal before being sent to tank farms for storage. When the PUREX Plant is restarted, the routing will be altered. The wastes will be neutralized within PUREX and routed directly to the Aging-Waste Facility in the 200 East Area.

The Aging-Waste Facility comprises four double-shell storage tanks in the 241-AY and 241-AZ tank farms, the piping external to PUREX leading directly to the four tanks, and the support systems associated with the safe storage of the neutralized high-level waste (NHW).

The differences between aging-waste tanks and other double-shell storage tanks are the aging-waste tank support systems. The aging-waste tanks are equipped with condensers in the ventilation system, tank heating coils, and air lift circulators. These components are described in detail in subsequent chapters of this SAR. Double-shell tanks for managing waste storage either lack or have fewer of these components.

This document was prepared in compliance with the U.S. Department of Energy (DOE) requirements.[1,2] Identified hazards and postulated accidents associated with the transfer and storage of NHW have been analyzed for potential impacts on the environment and on the health and safety of employees and the general public. These hazards and accidents are based on information currently available concerning the facility as it will be at the time NHW is first received by the aging-waste tanks. Current plans call for the Aging-Waste Facility to receive NHW from October 1983 until 1987. The time boundaries of this safety analysis report (SAR) include this 4-year period (plus an additional 5 years) to allow for radioactive decay to significantly reduce heat content of the waste. After that time period the impacts of any accidents or safety hazards that might develop would be less than those analyzed here. If PUREX continues to operate beyond 1987, as currently planned, or if significant modifications are made in the Aging-Waste Facility or in the waste composition, the impacts of these changes will be addressed at a later date, via a revision of this SAR or an addendum to it.

1.1 REFERENCES

1. DOE Order 5480.1A, August 1981, Environmental Protection, Safety, and Health Protection Program for DOE Operations, Chapter V, "Safety of Nuclear Facilities," U.S. Department of Energy, Washington, D.C.

2. DOE Order 5481.1A, August 1981, Safety Analysis and Review System U.S. Department of Energy, Washington, D.C.

LEFT BLANK INTENTIONALLY

2.0 SUMMARY SAFETY ANALYSIS

Potential hazards associated with the storage of high-level waste in the Aging-Waste Facility were identified. Hazard consequences and source terms were used to select events with the highest impact potential. These events were investigated in detail and either categorized as incredible events or developed into scenarios and analyzed as "worst case" accidents. Two accidents were analyzed, a tank "bump"* and a tank leak.

Conditions which maximized the severity of each accident were used during scenario development. For the tank bump, a potential PUREX process schedule was assumed that would provide the near maximum nuclide concentration and the maximum heat content. The maximum previously observed pressure transient and duration were assumed to occur. The resultant release was assumed to occur during adverse meteorological conditions. One-year and 50-year dose commitments were calculated for one onsite and two different offsite maximum-exposed individuals. The calculated total dose commitments (summation of external radiation, inhalation and, for one offsite individual, ingestion) are presented in Tables 2-1, 2-2, and 2-3. The population dose commitments in the maximum, downwind sector (SE) are listed in Table 2-4.

TABLE 2-1. Calculated Dose Commitment to the Onsite Individual Following a Tank Bump (rem).[a]

Dose Period	Total body	Bone	Lung
1 year	5.4	67	75
50 year	22	320	75

[a]Assuming a 5-minute exposure.

TABLE 2-2. Calculated Dose Commitment to the Maximum Individual on Highway 240 (rem).[a]

Dose Period	Whole body	Bone	Lung
1 year	0.3	3.6	4.0
50 year	1.2	17	4.0

[a]Assuming a 70-minute exposure.

*A tank bump is a rapid turnover of tank contents with a sudden release of overheated vapor.

9 2 1 2 5 6 2 1 1 5 5

TABLE 2-3. Calculated Dose Commitment to the Ringold Farmer (rem).

	Whole body	Bone	Lung
1-year commitment/ 1-year exposure	0.33	2.4	1.8
50-year commitment/ 1-year exposure	2.0	13	1.9
50-year commitment/ 50-year exposure	13	53	2.3

TABLE 2-4. Calculated Dose Commitment to the Offsite Population (man-rem)[a]

	Whole body	Bone	Lung
1-year commitment/ 1-year exposure	1,700	13,000	12,000
50-year commitment/ 1-year exposure	8,900	70,000	12,000
50-year commitment/ 50-year exposure	43,000	190,000	14,000

[a]Approximately 109,000 persons (1980 census) reside within 50 miles of the Hanford 200 Areas in the downwind (SE) sector.

The calculated risk for onsite and offsite individuals for this accident are listed in Table 2-5.

TABLE 2-5. Calculated Risk Following a Tank Bump Accident.

Location	Dose (rem)	Probability/yr	Risk (rem/yr)
Onsite	5.4	1×10^{-3}	0.005
Offsite			
Highway 240	0.3	1×10^{-3}	0.0003
Ringold	0.24	1×10^{-3}	0.0002

Based on the onsite individual's first-year lung dose commitment, a moderate- to high-hazard level is assigned to this accident. However, the risk (total dose commitment times the event probability) associated with this accident is acceptable. (See Chapter 9.0 for details.)

Factors contributing to an aging-waste tank leak were taken from data and documentation of aging-waste leakage during previous storage in single-shell tanks; the first year failure data of single shell tanks was included. The AX single-shell tanks are similarly constructed and have generally similar safety systems to those in the primary tank of the aging-waste tanks. Therefore, experience with the AX tanks are used to estimate a primary tank failure. Probability of failure of the secondary tank was estimated using data from single-shell tank failures that occurred less than 1 year after aging-waste was added to the tank. The probability is conservative and reasonable since the first year failure data of single-shell tanks was included. The construction of each of the two tanks in the double-shell facilities is superior to that of the single-shell tanks; and each tank would fail independently of the other.

The analysis of the tank leak showed that the radionuclide concentration that eventually reached the water table would not exceed the Federal guidelines for drinking water. The analysis also determined that no amount of organics added to the waste during the denitration process (PUREX) would significantly increase the radionuclide concentration reaching ground water.

Since waste does not reach groundwater in significant concentrations, the impact can not be defined in terms of radiation dose commitment. However, there are environmental impacts (release of organics to the soil and contamination of a soil column) and economic impacts (loss of a double-shell aging-waste tank) identified in this SAR. These impacts indicate that the hazard level of this accident should be classed as moderate. The impacts and probabilities for this accident are addressed in Chapter 9.0.

The operation of the aging-waste tank farms is bounded by the hazard associated with the worst case accident. The hazard of operating these farms is therefore classified as moderate, and the risk is acceptable.

9 2 1 2 5 6 2 1 1 5 7

LEFT BLANK INTENTIONALLY

9 2 1 2 5 6 2 1 1 5 8

3.0 SITE CHARACTERISTICS

3.1 GEOGRAPHY AND DEMOGRAPHY

The federally owned Hanford Site occupies 1,500 km^2 (570 mi^2) of a semiarid region in southcentral Washington State (Fig. 3-1). The Rockwell-managed Aging-Waste Facility tanks are located in the PUREX Waste Tank Farm complex of the 200 East Area on the Hanford Site (Fig. 3-2). Detailed geographic characteristics of the site are presented in References 1 and 2.

The 1980 population living within an 80-km (50-mi) radius of the Hanford Meteorological Station (HMS), west of the 200 East Area, was 341,000.(3) The 1990 population of this area is projected to be 417,000.(3) The onsite employee population of the Hanford Site is 15,000.(4) Land use in the area surrounding the Hanford Site includes urban, suburban, recreational, commercial, and industrial operations, plus irrigated and dryland farming.

3.2 NEARBY INDUSTRIAL, TRANSPORTATION, AND MILITARY FACILITIES

The Hanford Site is dominated by DOE-controlled facilities. Public transportation facilities nearest the 200 Areas are State Highways 24 and 240. Nuclear facilities within 40 km (25 mi) of the 200 Areas include the Exxon Nuclear Fuel Fabrication Plant located in Richland, three partially constructed Washington Public Power Supply System reactors, the U S Ecology Company, Inc. waste disposal facility, and the DOE facilities located within the boundaries of the Hanford Site.(1) The eastern boundary of the nearest military facility, the Yakima Firing Center, is 40 km (25 mi) west-northwest of the HMS.

3.3 CLIMATOLOGY AND METEOROLOGY

The climate in the vicinity of Hanford has been recorded since 1912 and is characterized as mild and dry with occasional periods of high wind.(1) A peak gust wind (straight) of 130 km/hr (80 mph) was measured on January 11, 1972 at the 15-meter (50-ft) level of the HMS tower. The average annual precipitation is 16 cm (6.3 in.). Tornadoes are rare in this region and tend to be small, causing only minor damage.(1) On June 16, 1948, a tornado was observed near the east end of Rattlesnake Mountain, 16 km (10 mi) south of Hanford's waste management facilities; no damage resulted. Water erosion associated with facilities located on the 200 Areas plateau is minor because of the minimal precipitation, high soil porosity, and minimal ground slope.

9212562115 9

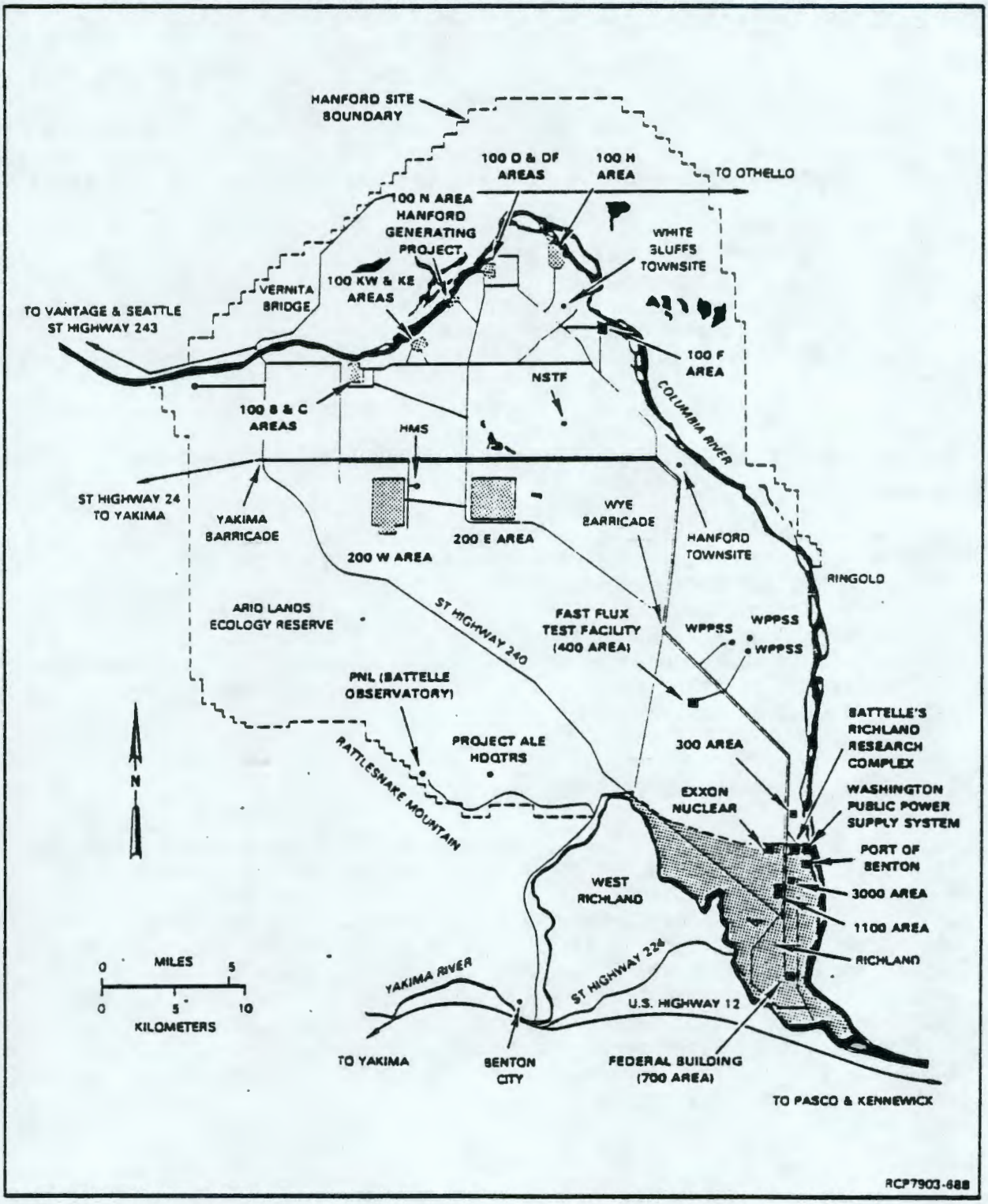

FIGURE 3-1. Hanford Site.

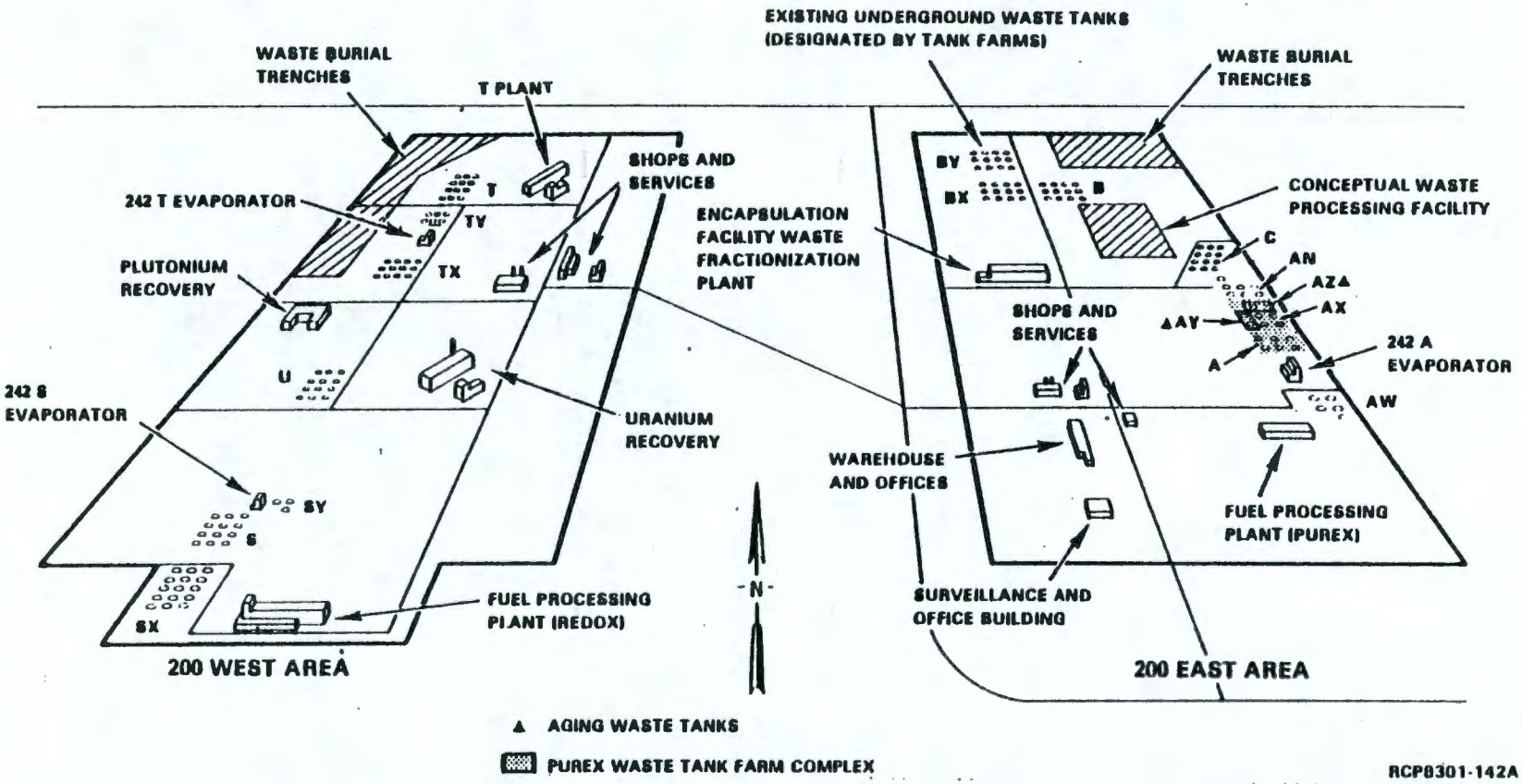

FIGURE 3-2. 200 Areas Processing and Waste Management Facilities.

9613448.0013

3.4 GEOLOGY AND HYDROLOGY

The Hanford Site lies in a portion of the geologic formation known as the Columbia Plateau Physiographic Province. It is part of a smaller subdivision called the Pasco Basin, which is composed of large quantities of basalt interspersed with thick layers of sedimentary material. These sedimentary layers are water bearing, and collectively constitute a vertically stratified series of confined aquifers beneath the Hanford Site. Above the uppermost layer of basalt lies the unconsolidated sand and gravel of the Ringold Formation, which ranges up to 300 meters (1,000 ft) in depth. Above this, and extending to the surface, is the Hanford Formation, covered by a thin layer of windblown silts and sands.

The water table in this unconfined region lies 46 to 90 meters (150 to 300 ft) below the surface in the 200 Areas. The maximum 24-hour precipitation that can be expected to occur once in 1 million years is 28 cm (11 in.).[2] Even this amount of rainfall would not cause appreciable flood damage to facilities on the Hanford Site.[5] The maximum amount of precipitation recorded in a 12-hour period was 4.8 cm (1.9 in.).[2]

3.5 SEISMOLOGY

Hanford facilities are exposed to the possibility of moderate earthquake damage (Zone 2) from both active seismic zones of western Washington and closer shocks originating in the seismic zone that includes Walla Walla.

The safe shutdown earthquake (SSE) of 0.25-g horizontal ground acceleration allows for an earthquake intensity of MM VIII on the Modified Mercalli scale (magnitude 6.8 on the Richter scale) epicentered at the Hanford Site. This is considered conservative, since no earthquake of this magnitude has ever been recorded in eastern Washington or Oregon.[1] The largest recorded earthquakes were one of magnitude 5.7 at Milton-Freewater, Oregon, July 15, 1936 and one of magnitude 4.0 which occurred south of College Place, Washington, April 7, 1979.[2]

The December 14, 1872 earthquake in the North Cascades is estimated to have resulted in an intensity of MM VIII. The resulting ground acceleration at the Hanford Site was estimated to have been about 0.05g. In 1976 a panel of experts concluded that this earthquake was of magnitude 7.0. Because this earthquake occurred in a distinct tectonic province separate from the Columbia Plateau, it is considered unlikely that an event of the magnitude of the 1872 earthquake could take place in the Columbia Plateau.[2,6]

The largest local earthquake of historical record occurred at Corfu, a few kilometers north of the site, in 1918. Various damage estimates have been reported resulting in a classification of MM IV or V. Estimates of the peak ground acceleration made for the Corfu event range from 0.01 to 0.03 g. Data indicate that no events larger than MM V to VI have occurred in the vicinity of the 200 Areas.

3.6 REFERENCES

1. ERDA-1538, December 1975, Final Environmental Statement, Waste Management Operations, Hanford Reservation, U.S. Energy Research and Development Administration, Washington, D.C.

2. PNL-3509 Pt. 2, July 1982, Standardized Input for Hanford Environmental Impact Statements. Part II: Site Description, J. D. Jamison, Pacific Northwest Laboratory, Richland, Washington.

3. PNL-4010, November 1981, Population Estimates for the Areas Within a 50-Mile Radius of Four Reference Points on the Hanford Site, D. J. Sommer, R. G. Rau, and D. C. Robinson, Pacific Northwest Laboratory, Richland, Washington.

4. BNWL-2298, July 1977, Hanford Reservation Area Worker Census, K. E. Yandon, Battelle Northwest Laboratories, Richland, Washington.

5. RHO-CD-78, August 1977, Assessment of Hanford Burial Grounds and Interim TRU Storage, D. J. Brown, J. F. Geiger, and R. E. Isaacson Rockwell Hanford Operations, Richland, Washington.

6. H. A. Coombs, W. G. Milne, O. W. Nuttlie, and D. B. Slemmons, "Report of the Review Panel of the December 14, 1872 Earthquake", in Washington Public Power Supply System Preliminary Safety Analysis Report, Amendment 23, Appendix 2R A, 1976, Washington Public Power Supply System, Richland, Washington

9 2 1 2 5 6 2 1 1 6 3

LEFT BLANK INTENTIONALLY

9 2 1 2 5 6 2 1 1 6 4

4.0 PRINCIPAL DESIGN CRITERIA

The basic criterion for the Aging-Waste Facility is the safe transfer and interim storage of high-heat producing radioactive waste. The waste is stored in this facility until the heat generated by radioactive decay decreases to less than 70,000 Btu/hr per tank. At that time, this material can be transferred from this facility to other double-shell storage tanks or to a permanent storage facility.

Criteria for the design and construction of aging-waste tanks and support systems were developed according to the codes and standards in effect at the time of design and construction. The Aging-Waste Facility includes components constructed from less than 1 year to up to 25 years ago. In the past, few criteria existed that were directed specifically to the storage of high-level radioactive waste. The considerations used to analyze the safety aspects of the Aging-Waste Facility are presented in this chapter. These considerations are described in three general categories: structural, control, and administrative.

4.1 STRUCTURAL

Safety considerations were used to evaluate the physical structures, systems, and components. The general concept in a facility design, for purposes of high-level contamination confinement, shall be primary (process enclosures), secondary (operating area compartments), and tertiary (structure) containment, including the associated ventilation systems.(1)

The degree of confinement in the design shall depend on the potential hazards of the material being confined. The principal means for assuring the safe confinement of large quantities of radioactive materials within the waste management facility shall be the provision of confinement systems between the normal location of radioactive material and the environment.(2)

Structures, confinement systems, and related components important to safety shall be designed and located to minimize the probability and effects of fires and explosions. Recognized industrial fire and chemical safety standards shall be utilized where applicable for the evaluation of plant structures, confinement systems, and equipment.(2,3)

Facilities and systems shall be designed to withstand wind forces in accordance with the Uniform Building Code (UBC), Section 2308, Tables 23-F and 23-G, as applicable.(4) Underground waste storage tanks shall be designed to meet criteria in ASME BPV-VII(5) and seismic criteria defined in Hanford Plant Standard Design Criteria (SDC) 4.1, Category I;(6) other systems shall be in compliance with UBC(4) for seismic zone 2.

There shall be no bypasses or drains in the radioactive liquid waste treatment system by which waste may inadvertently circumvent treatment equipment or be released directly into the environment.(7)

9 2 1 2 5 6 2 1 1 6 5

Exposure rates in work areas shall be as low as reasonably achievable (ALARA) by proper facility design and equipment layout. Design factors to consider include: occupancy time, source terms, spacing, processes, equipment, and shielding. Primary means for assuring protection should be through physical safeguards (e.g., remote handling, equipment and shielding). Administrative controls should be regarded as secondary means.[1]

The wastes in initial storage facilities shall be contained and emplaced so as to be retrievable for removal and transfer without compromising safety.[7]

Process and waste storage vessels and piping serving as primary confinement barriers shall have a secondary barrier provision so that failure or replacement of the primary barrier does not result in the release of radioactive material in excess of DOE Guidelines.[1,2]

Spare tanks shall be maintained that provide a volume in excess of initial storage requirements for high-level liquid wastes. Each tank farm holding high-heat liquid waste shall have available, in tanks empty except for a residual heel, space equivalent to the largest volume of such wastes stored in any one tank. (Interconnected tank farms with rapid transfer capability may be considered as a single tank farm for purposes of this requirement.)[8]

Provisions should be made for cleanout and decontamination of liquid waste piping, as necessary, to clear potential blockages, perform maintenance or repair, or to maintain occupational doses ALARA.[7]

Tanks and transfer systems shall be designed to resist credible internal and external forces (including natural phenomena).[8]

Pressure-retaining safety class tank and piping systems shall be of welded construction to the extent practicable.[7]

At least two independent safety features shall be provided to prevent excessive releases of radioactivity to the environs. The functioning of safety-related systems should be analyzed with reference to other systems to ensure that their functioning does not lead to another safety problem.[2]

Maximum advantage should be taken of gravity flow to reduce the potential for contamination associated with pumping and pressurization.[7]

Systems shall be provided for the removal of radioactive decay heat as required to protect the integrity of confinement systems.[2]

Adequate heat transfer shall be provided for all stored waste. The structure surrounding the storage container shall be designed to withstand the expected temperature. Nonuniform distribution of heat caused by solids in the waste shall be considered in the design of the tank and of the heat transfer systems.[2]

To the extent practicable, liquid waste treatment systems should include features to permit volume reduction and/or waste solidification.[7]

4.2 CONTROL

Control considerations were used for evaluation of parameters or locations having significant importance to safety. DOE Order RL 5820.2 states that: "Radioactive liquid discharges to the ground shall be as low as technically and economically practical (ALATEP) and for new facilities shall be below Table II concentration Guides."[9] In addition, this order states that: "Facilities discharging liquid which could, as a consequence of an accident or process upset, become contaminated above nondischargeable levels, shall be equipped with automatic detection, and appropriate handling capabilities."[9]

Measurement capability should be provided to determine the volume, concentration, and radioactivity of wastes fed into collection tanks. To the extent practical, more than one method should be used in making the determination of fluid volume and concentration.[7]

Protection will be provided to control exposure to direct radiation and to control inhalation of, ingestion of, and external contamination by radioactive materials. This protection shall be provided by installing radiation shielding and ventilation systems, controlling the access to plant areas, limiting quantities of radioactive materials to specified areas, monitoring plant areas and plant personnel for radioactivity, and providing appropriate administrative controls and protective devices. The measures shall be provided either singly or in combination, depending on the level or type of radioactivity present and on the work being performed.[2]

The facility shall be provided with a control room(s) and/or control location(s) for instrument readout and for the control of actions to maintain safe operational status of the facility. The design shall provide safe access under accident conditions to equipment controls that may be necessary to shut down and maintain safe control of the facility without unnecessary radiation exposure of plant personnel.[2]

The utility systems that are essential to maintaining safety shall be designed to include alternative supplies with capacity to perform their safety functions. Reliable emergency power shall be provided to controls, instruments, confinement systems, service systems, and process systems necessary to allow operations to be shut down safely and to be maintained safely in a shut-down condition. Emergency utility systems shall be designed to maintain their functions during a single failure. Emergency utility services shall be designed to permit the testing of their functional operability and capacity, including both the full operational sequence of each system for transfer between normal and emergency sources and the operation of associated safety systems.[2]

The instrumentation required for monitoring the status of confinement systems shall be designed to ensure the continued performance of essential monitoring functions under accident conditions.[2]

Instrumentation shall be provided for the early detection of leakage from the primary confinement system.[2]

Process and waste storage vessels shall be vented through appropriate treatment systems for the confinement of airborne radioactive materials.[2]

Instrumentation and controls shall be provided, as required, to fully monitor safety-related variables and to maintain them within operating ranges. Safety-related instrument systems shall be designed to a fail-safe mode and should alert operators to a failure condition.[2]

Instrumentation shall be provided for periodically or continuously monitoring the potentially radioactive airborne and liquid effluents and contamination levels. Monitoring for nonradioactive contaminants shall be in accordance with appropriate regulations.[2]

In addition, RHO-MA-139[10] provides for criteria for effluent sampling and monitoring, and RHO-MA-220[11] provides criteria for radiation monitoring, allowable exposure, posting, etc.

Radioactive discharge to the atmosphere shall be ALATEP with the objective of not exceeding DOE Order 5480.1A, Table II concentration guides at the points of discharge.*[9]

Provisions shall be made to prevent the reversal of air flow (normally maintained from areas of low contamination potential toward areas of high contamination potential) either by adequate pressure drops to produce the desired air flow direction or by back-flow prevention barriers. Alternatively, filters may be installed to filter back-flow air adequately to provide required contamination control.[2]

Concentrations of radionuclides in liquids discharged to the ground shall be ALARA and for old facilities shall be maintained below the Concentration Guides in Table I of Attachment XI of DOE Order 5480.1A.[1]. Liquid containing transuranic wastes with concentrations greater than these Concentration Guides shall not be discharged to the ground.[9]

4.3 ADMINISTRATIVE

Considerations that do not lend themselves to structural design or automatic control, but that promote safety by means of actions suggested and/or required are termed administrative controls.

DOE Order 5480.1A, Chapter V[12] establishes safety procedures and requirements for nuclear facilities. The following administrative considerations are included:

- A contractor safety review and appraisal system that requires independent safety review and approval of all changes to components, equipment, procedures, and systems required for facility safety

---

*DOE Order 5480.1A Page XI-6 defines "point of discharge" as the place where the effluent passes beyond the site boundary.

- Development and implementation of quality assurance programs
- Implementation of notification, investigation, and reporting of occurrences and the followup system to assure remedial action
- A formal documented system for the control and traceability of records and documentation
- A documented training program for personnel involved in operating nuclear facilities.

The radioactivity and the chemical and physical characteristics of all high-level wastes in initial storage shall be determined.[8] Influents to radioactive liquid waste systems should be controlled, to prevent the introduction of material that may adversely affect system performance. Such materials may include, but are not necessarily limited to, oils, certain types of organics, insoluble solids, and solvents.[7]

Sampling frequency and type should be determined by considering the purpose for which the data are being obtained, e.g., evaluation of the effectiveness of waste treatment and control, compliance with operating limits of applicable effluent or performance standards, compilation of release data, etc. Continuous sampling is desirable and may be necessary where there is wide variation in the concentration or mixture of potential pollutants in the effluent stream. However, periodic sampling may suffice when the concentrations and mixtures are reasonably constant and there is little likelihood of unusual variations. Similarly, proportional sampling may be necessary when effluent flow rates fluctuate; whereas, a representative grab-sample may suffice for batch discharges.

4.4 REFERENCES

1. DOE 5480.1A, August 1981, Environmental Protection, Safety and Health Protection Program for DOE Operations, Chapter XI, "Requirements for Radiation Protection," U.S. Department of Energy, Washington, D.C.

2. ANSI N101.3, December 1979, Guide to Principal Design Criteria for Nuclear Fuel Reprocessing Facilities, American National Standards Institute, New York, New York.

3. National Fire Code, 1983, A Compilation of NFPA Codes, Standards, Recommended Practices, and Manuals, National Fire Protection Association, Boston, Massachusetts.

4. Uniform Building Code, 1982, Section 2308, "Special Design," International Conference of Building Officials.

5. ANSI/ASME BPV-VII-1, 1980, ASME Boiler and Pressure Vessel Code, Section VIII "Rules for Construction of Pressure Vessels," Division 1, American Society of Mechanical Engineers, New York, New York.

9212562169

6. Hanford Standard Design Criteria, Revised May 1982, SDC-4.1 "Standard Architectural - Civil Design Criteria, Design Load for Structures," Rev 7, February 25, 1974, Department of Energy, Richland Operations, Richland, Washington.

7. DOE/TIC-11603, September 1981, Nonreactor Nuclear Facilities: Standards and Criteria Guide, Brookhaven National Laboratory Associated Universities, Inc., Chapter 6, "Radioactive Waste Management Systems," Brookhaven, New York.

8. ERDA 0511, September 1973, Radioactive Waste Management, U.S. Energy Research and Development Administration, Washington, D.C.

9. DOE-RL Order 5820.2, July 1979, Radioactive Waste Management, U.S. Department of Energy, Richland Operations, Richland, Washington.

10. RHO-MA-139, June 1981, Environmental Protection Manual, G. F. Boothe and D. L. Uhl, Rockwell Hanford Operations, Richland, Washington.

11. RHO-MA-220, February 1983, Radiological Standards and Operational Controls, Radiological Engineering Group staff, Rockwell Hanford Operations, Richland, Washington.

12. DOE Order 5480.1A, August 1981, Environmental Protection, Safety and Health Protection Program for DOE Operations, Chapter V, "Safety of Nuclear Facilities," U.S. Department of Energy, Washington, D.C.

9 2 1 2 5 6 2 1 1 7 0

5.0 FACILITY DESCRIPTION

5.1 INTRODUCTION

Aging-waste tanks differ from other double shell tanks, such as the proposed AP tanks or the existing AN and AW tanks, by the addition of two major support systems and a subsystem. These additional systems allow the tanks to receive and store high-heat generating wastes with a minimum probability of loss of integrity. These systems are:

- A tank preheating system comprised of a steam coil, steam piping, steam condensate piping, valves and instrumentation necessary to control the rate of tank preheating
- A waste mixing system comprised of 22 airlift circulators, air lines, air compressors, valves and instrumentation necessary to control the mixing
- An exhaust condenser system comprised of three condensers, cooling water piping, condensate piping, valves, and instrumentation necessary to control condensate in the exhaust stream. This system is actually a subsystem of the tank primary ventilation system.

Chapter 5.0 contains a physical description of the facility including these unique systems.

The location of the aging-waste tanks (241-AY-101 and -102 and 241-AZ-101 and -102) is shown with respect to the 241-A tanks, 241-AX tanks, 241-A-271 Control Building and ventilation facilities in Figure 5-1.

5.2 WASTE TRANSFER PIPING

A plot plan of the primary and backup lines for transferring aging-waste from the PUREX Plant to the 241-AY and -AZ tanks is shown in Figure 5-2 and Figure 5-2A.

5.2.1 Primary Piping

The primary route consists of encased all-welded lines V-714 from the PUREX Building to the 241-AX-155 Diversion Box, 4503 from the Diversion Box to TK-241-AY-101, 4506 from the Diversion Box to TK-241-AY-102, 4509 from the Diversion Box to TK-241-AZ-101, and 4512 from the Diversion Box to TK-241-AZ-102. The M-9 primary piping is ASTM A312, Grade TP 304L. Details about the characteristics of these lines are tabulated in Table 5-1 and illustrated in Figure 5-2. In the tank farm some of the primary and backup piping share encasements. The primary and backup transfer lines are redundant because they share no piping. The purpose of the encasement is to allow verification of pipeline integrity and containment.

9212562117

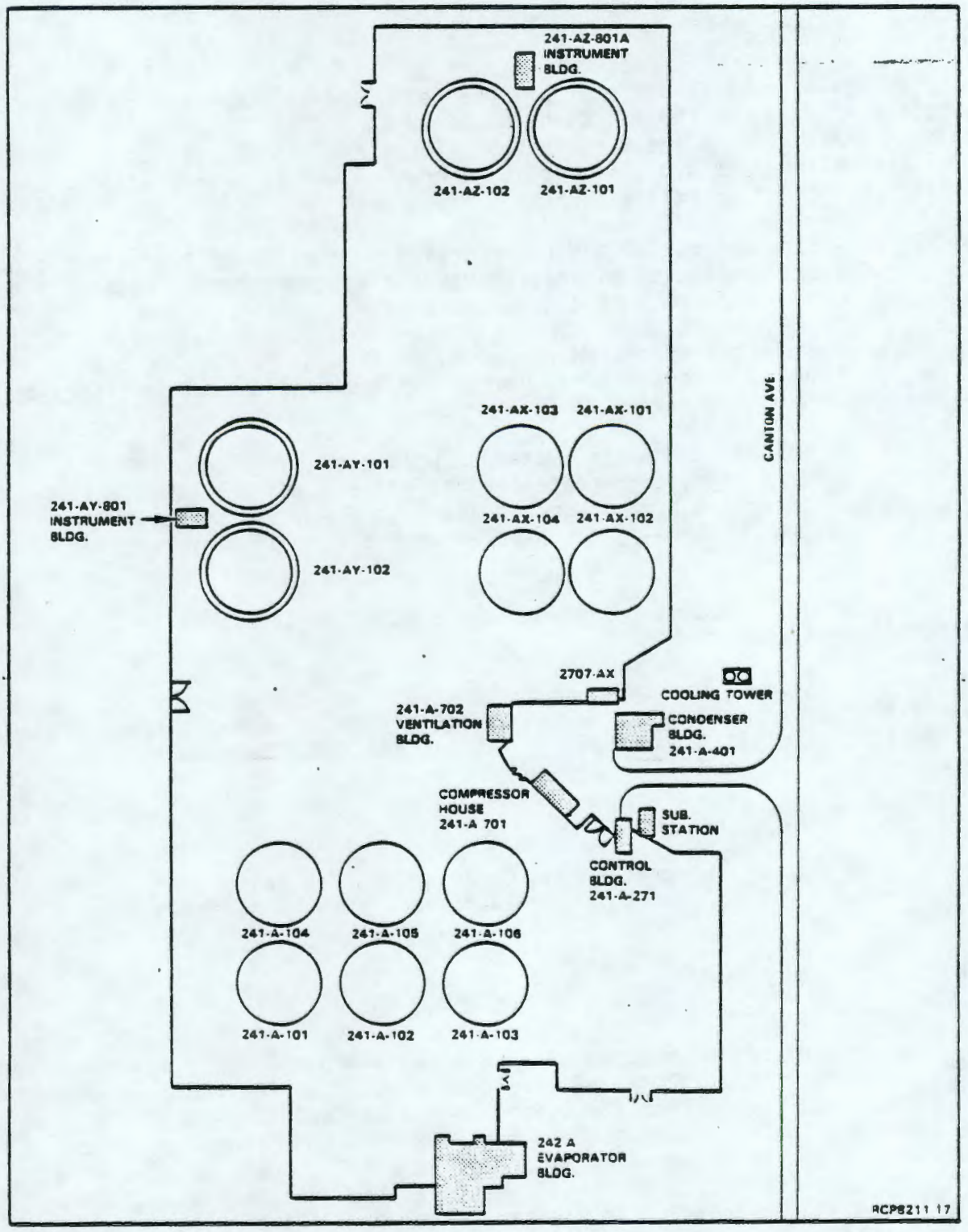

FIGURE 5-1. Layout--PUREX Waste Tank Farm Complex.

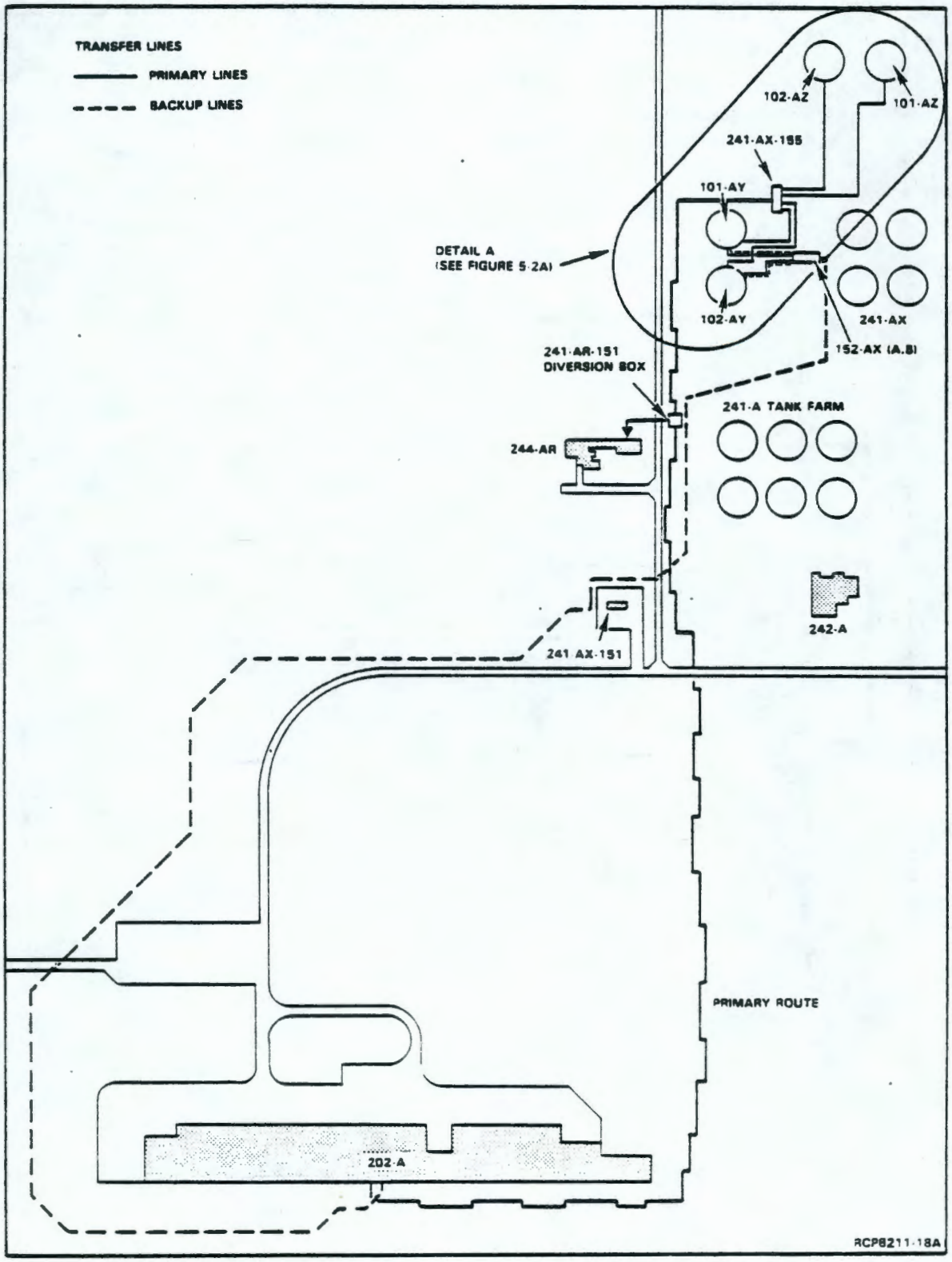

FIGURE 5-2. Plot Plan--PUREX Primary and Secondary NHW Routings.

9 2 1 2 5 6 2 1 1 7 3

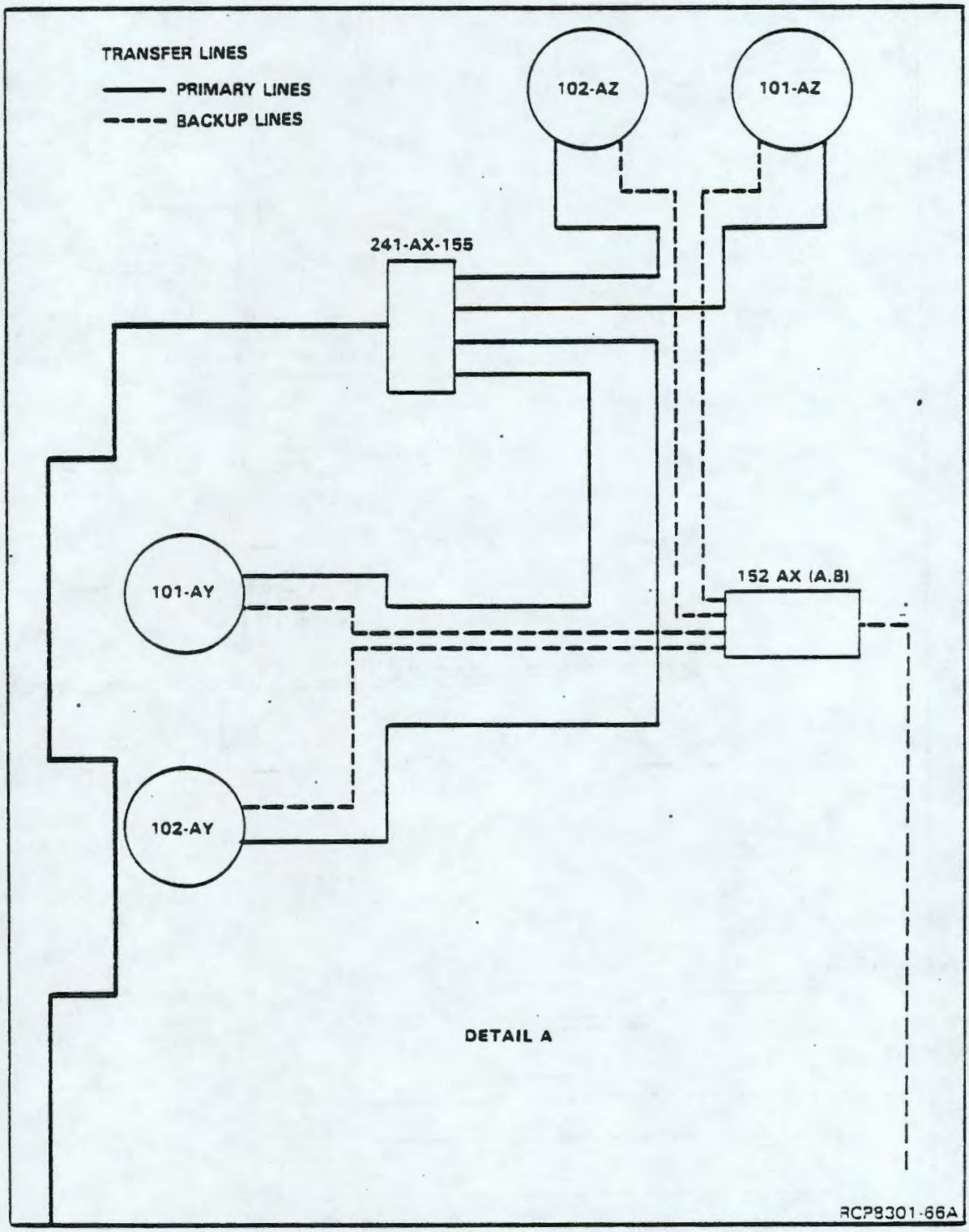

FIGURE 5-2A. Detail--Aging Waste Facility Waste Transfer Lines.

TABLE 5-1. Routes of Primary Piping for PUREX NHW.

Route	Line No.	Size (in.)	Material[a]	Pipe code	Length (ft)
PUREX TO 241-AX-155 Diversion Box	V-714 Encasement	3 6	S.S. C.S.	M9 M26a	3,200
Diversion Box to TK-101-AY	4503 Encasement	3 - 4	S.S. Concrete	M9	300
Diversion Box to TK-102-AY	4506 Encasement	3 - 4	S.S. Concrete	M9	300
Diversion Box to TK-101-AZ	4509 Encasement	3 - 4 6	S.S. C.S.	M9 M26a	720
Diversion Box to TK-102-AZ	4512 Encasements	3 - 4	S.S. Concrete	M9	620

[a]All of the carbon steel (C.S.) and stainless steel (S.S.) pipe is Schedule 40 and all-welded construction.

The encasement for line V 714 is equipped with swab risers to facilitate contamination checks. The encasement is drained to the 241-AX-155 Diversion Box which in turn drains to the 241-AX-152 Diverter Station catch tank. The encasement from the 241-AX-155 Diversion Box to the AY tanks drains to the 101 B Leak Detection Pit; the encasement from the 241-AX-155 Diversion Box to the AZ tanks drains to the 241-AZ-101/102 Leak Detection Pit. Both leak detection pits can be pumped out to underground waste tanks.

The 241-AX-155 Diversion Box has inside dimensions of 6 ft by 9 ft by 12 ft deep with 20 in. thick concrete walls. Cover blocks are 40 in. thick. Minimum ground cover for the piping is 6 ft.

All piping slopes from PUREX to the waste tanks. Minimum slope of the piping is 0.25% from PUREX to the 241-AX-155 Diversion Box. From the 241-AX-155 Diversion Box to the tanks there are some short runs (one length of 30 ft, one length of 3 ft, and one length of 1 ft) in which the slope is 0°.

5.2.2 Backup Piping

The backup route consists of encased lines 4003 from PUREX to the vicinity of the 151-AX Diversion Station, 4003/4017 tie-in by-passing the 151-AX Diversion Box, 4017 to the 152-AX(B) Diverter Station, 4502 from the Diverter Station to TK-241-AY-101, 4505 from the Diverter Station to TK-241-AY-102, 4508 from the Diverter Station to TK-241-AZ-101, and 4511

9 2 1 2 5 6 2 1 1 7 5

from the Diverter Station to TK-241-AZ-102. The steel piping is of all-welded construction. The stainless steel backup piping is of the same material as the primary piping, viz. ASTM A312, Grade TP 304L. The characteristics of these lines are tabulated in Table 5-2. The backup piping does not have any thermal expansion loops. PUREX controls are used to prevent the discharge of live steam into backup piping. The backup piping can handle the normal PUREX liquid waste.

All piping slopes from PUREX to the waste tanks. Minimum slope of the piping is 0.25% from PUREX to the 152-AX (B) Diverter Station. From the 151-AX (B) Diverter Station to the tanks there are some short runs (one length of 30 ft, one length of 3 ft, and one length of 1 ft) in which the slope is 0°.

The 152-AX (B) Diverter Station has 5-ft-thick cover blocks. Minimum ground cover for the piping is 6 ft.

5.2.3 Intertank Piping

Pipe-in-pipe or pipe-in-concrete encased lines are in place to permit pumping from any one of the four tanks, TK-241-AY-101, TK-241-AY-102, TK-241-AZ-101 and TK-241-AZ-102, to another. Tank 102-AZ is scheduled to be filled first and Tank 101-AZ serves as a spare. Pit 102-AZ-02B is connected to pit 101-AZ-01C via encased line SN-601, which permits pumping from tank 102-AZ to 101-AZ. Routings to Tank 101-AY and Tank 102-AY are provided by line SN600 from pit 102-AZ-02B to AX-A valve pit, which has internal piping to AX-B valve pit. Line SL-502 connects AX-B valve pit with pit 102-AY-02D, line SL-503 connects to pit 102-AY-02A which services the 102-AY tank, and line SL 504 which connects to 101-AY-02D pit which services the 101-AY tank. The intertank piping is shown in Figure 5-3. Details and characteristics of the lines are tabulated in Table 5-3.

The pipe-in-pipe lines are 2-in., schedule-40, carbon steel pipe in 4-in., schedule-40, carbon steel pipe. The concrete-encased pipe is 2-in., schedule-40, carbon steel pipe. Minimum slope of any line is 0.25% and minimum ground cover is 3 ft. Each encasement is equipped with an encasement hydrotest riser at the upper end and a test riser at the lower end. The test riser can be drained to the adjacent receiving pit.

There is one pump pit, four sluice pits, and AX-A and AX-B valve pits in the intertank transfer system. The pump pits have 30-in. concrete cover blocks; sluice pits have 24-in. concrete cover blocks and the AX-A and AX-B pits have 20-in. concrete cover blocks.

5.3 TANKS

The design life of the AY and AZ tanks is at least 50 years.[1] Each 241-AY and 241-AZ Tank consists of three concentric structures as shown in Figure 5-4. The outer tank structure is a reinforced concrete tank designed

TABLE 5-2. Routes of Backup Piping for PUREX NHW.

Route	Line No.	Size (in.)	Material thickness	Material[a]	Pipe code	Length (ft)
PUREX to near 241-AX-151 Diversion Box	4003 Encasement	3	Schedule 10	S.S. Concrete	M9	
241-AX-151 Diversion Box Bypass	4003/4017 Encasement	3 6	Schedule 40 Schedule 40	S.S. C.S.	M9 M26a	Total 4,100
On to 241-AX-152(B) Diverter Station	4017 Encasement	4	Schedule 10	S.S. Concrete	M9	
Diverter Station to TK-101-AY	4502 Encasement	4	Schedule 40	S.S. Concrete	M9	200
Diverter Station to TK-102-AY	4505 Encasement	4	Schedule 40	S.S. Concrete	M9	200
Diverter Station to TK-101-AZ	4508 Encasement	4 6	Schedule 40 Schedule 40	S.S. C.S.	M9 M26a	600
Diverter Station to TK-102-AZ	4511 Encasement	4	Schedule 40	S.S. Concrete	M9	500

[a]All of the carbon steel (C.S.) and stainless steel (S.S.) pipe is of all-welded construction.

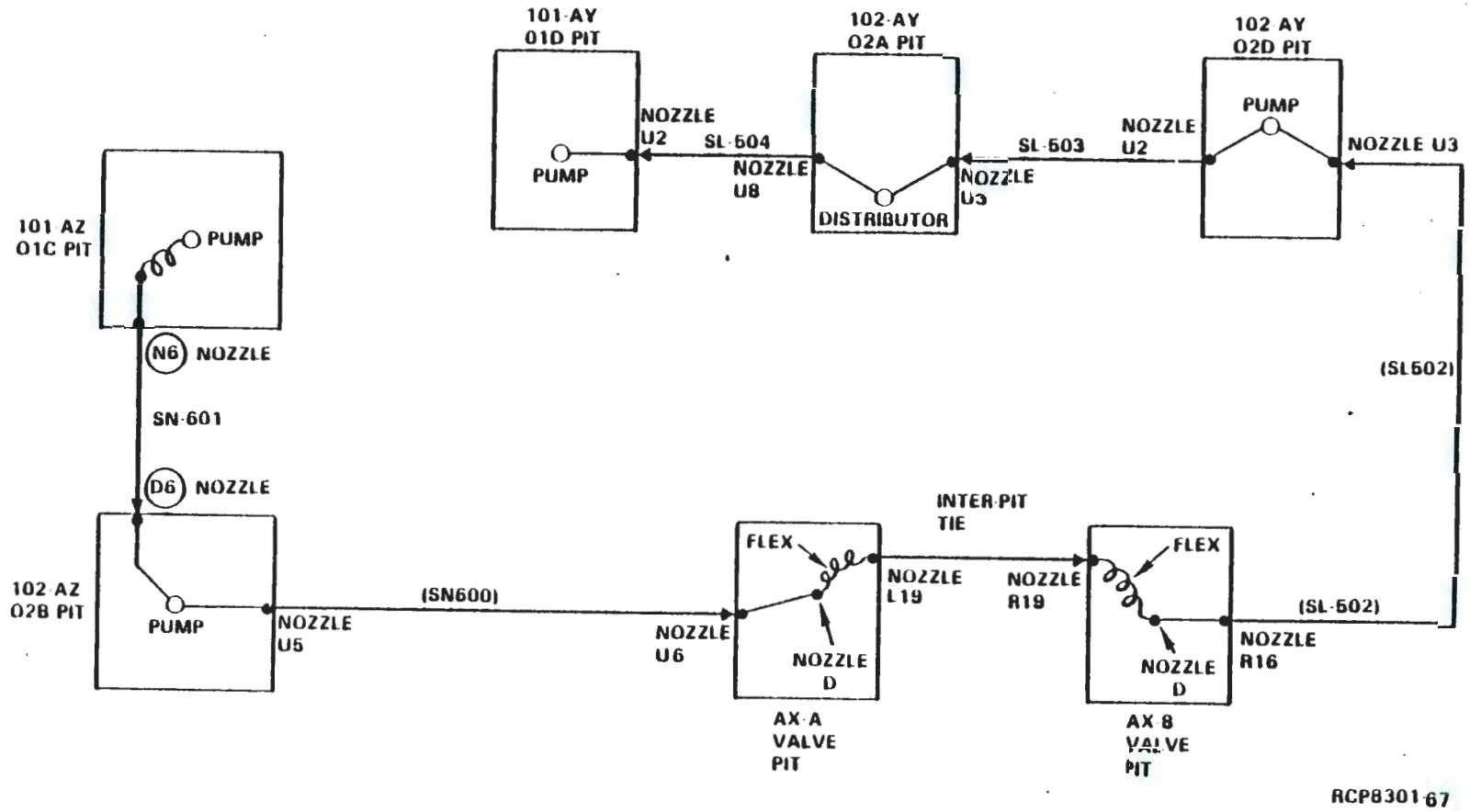

FIGURE 5-3. Boiling Waste Intertank Transfer Route.

TABLE 5-3. Routes of Intertank Piping.[a]

Route	Line No.	Size (in.)	Material	Pipe code
Pit 101-AZ-01C to Pit 102-AZ-02B	SN-601 Encasement	2 4	C.S. C.S.	M25 M26a
Pit 102-AZ-02B to AX-A Valve Pit	SN-600 Encasement	2 4	C.S. C.S.	M25 M26a
AX-B Valve Pit to Pit 102-AY-02D	SL-502 Encasement	2 4	C.S. C.S.	M25 M26a
Pit 102-AY-02D to Pit 102-AY-02A	SL-503 Encasement	2 -	C.S. C.S.	M25 M26a
Pit 102-AY-02A to Pit 101-AY-01D	SL-504 Encasement	2 -	C.S. C.S.	M25 M26a

[a] All pipe is Schedule 40, carbon steel and is of all-welded construction.

The basis for design and construction of the 241-AY and 241-AZ tanks includes the following parameters:(2,3,4)

Diameter of Primary Vessel	75 ft
Maximum Storage Volume of Concentrated Wastes, Gallon/Tank	1,000,000
Vapor Pressure Allowance	60 in. water
Vacuum Pressure Allowance	6 in. water, vacuum
Tank Dome Live Load	40 psf + 50 t concentrated
Earth Cover	6.5 ft minimum

9 2 1 2 5 6 2 1 1 7 9

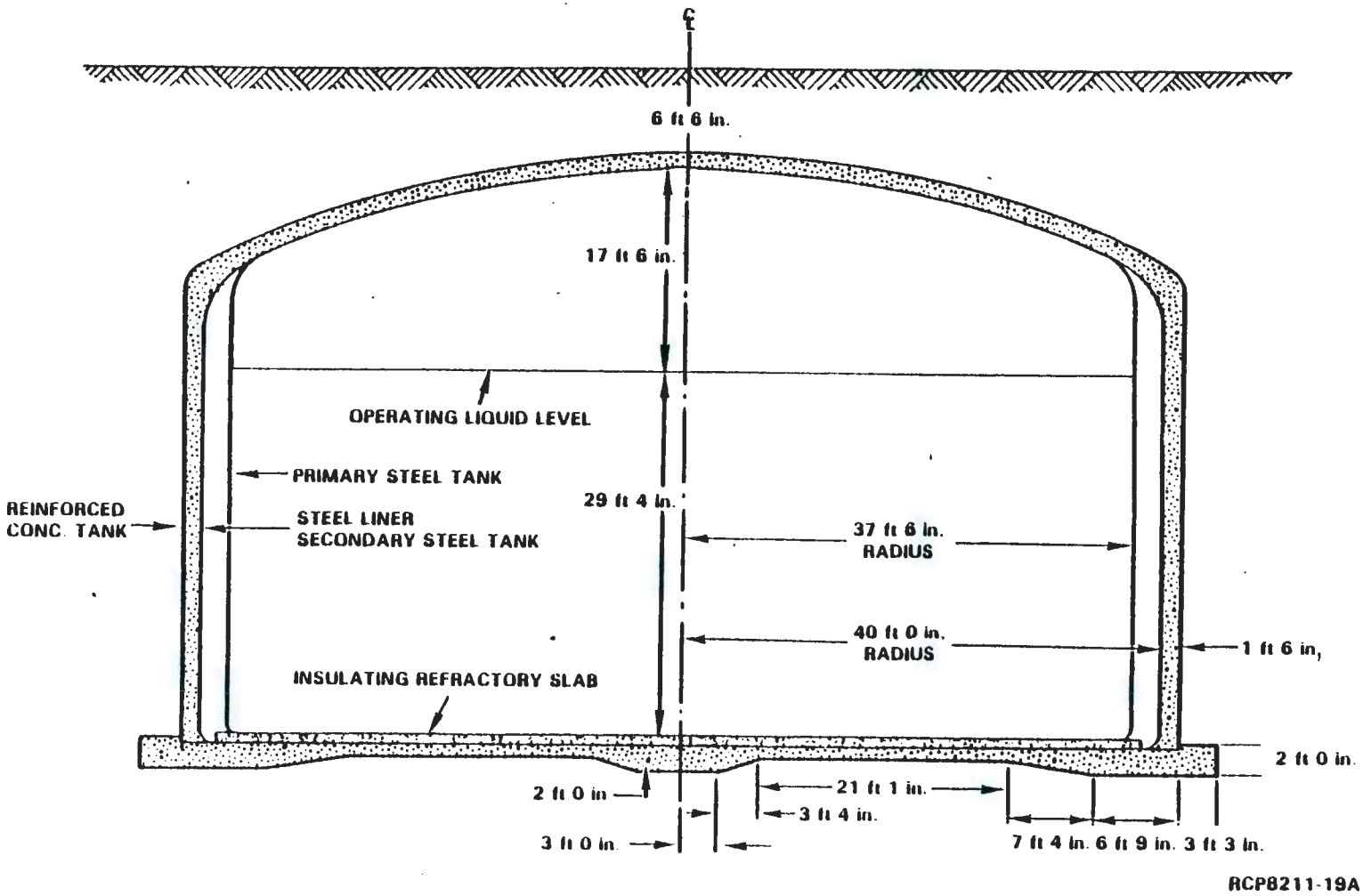

FIGURE 5-4. Vertical Section through Double-Shell Tank.

to sustain soil loadings, dead loads, live loads, loads caused by natural forces, and elevated temperatures generated by the radioactive wastes contained within the primary tank. The reinforced concrete tank is lined with a carbon steel liner called the secondary steel tank. The inner, freestanding, completely enclosed carbon steel tank, referred to as the primary tank, is within the secondary steel tank. The steel tanks are separated by an annular space. The primary tank is designed to contain the radioactive waste materials. The secondary steel tank would contain any liquid leakage from the primary tank until the tank contents can be transferred to a spare aging-waste tank.(1)

5.3.1 Primary Tank

The freestanding primary tank is 75 ft in diameter and is 46 ft 10 in. high at the dome crown. The projected operating height is 29 ft, 4 in (968,000 gal). The carbon steel in the bottom of the tank ranges from 3/8 in. to 1 in. for AY tanks and 1/2-in. to 1-in. in thickness for AZ tanks. The knuckle (the transition section from tank floor to tank wall) is of 7/8-in. steel plate. The primary tank wall thickness ranges from 3/8 in. to 3/4 in. and the dome is 3/8-in. to 1/2-in.-thick steel.(1) The primary tanks were constructed of heat-treated, ASTM-A515, Grade 60 steel, and hydrostatically tested for leaks after construction.

5.3.2 Secondary Steel Tank

The secondary steel tank lines the reinforced concrete tank and extends to the primary tank dome. The secondary steel tank is 80 ft in diameter and varies in thickness from 1/4 in. to 3/8 in. There is an annular space of 2.5 ft between the primary tank and the secondary steel tank to allow for installation of liquid level detection devices, inspection equipment (periscopes, television cameras, and photographic cameras), ventilation air supply and exhaust ducts, and equipment for pumping liquid out of the annular space.(1) The secondary tank was fabricated of heat-treated, ASTM-A515, Grade 60 steel.

5.3.3 Insulating Slab

An 8-in. slab made of castable refractory concrete is sandwiched between the primary and the secondary tank bottoms. This slab protects the reinforced concrete foundation from excessive temperatures during the stress relief of the primary tank. During operation of the tanks, the annulus ventilation system routes air through slots in the insulating slab to the annulus. This air flow cools the waste tank slightly and would transport radioactive particulates to an air monitor in the event of a leak in the primary tank. The slots would also conduct liquid drainage from beneath the primary tank to the annulus for detection and pumpout.(1)

5.3.4 Welding and Stress-Relief

All primary and secondary steel tank seams were full penetration butt-welded in accordance with approved weld procedures by certified welders. The welds were first visually inspected. All welded areas below the inner tank tangent line* were X-rayed and accepted per the requirements of ASME BPV Code, Section VIII, Division 2.[5] In addition, welds in the tank bottom were tested by using magnetic particle and dye penetration procedures. After tank fabrication was completed, the primary tank was filled with water to the inner tank tangent line and leak checked. In addition, the steel plate was ultrasonically tested at the mill for plate flaws before it was shipped to the construction site.[1]

To relieve residual fabrication stresses, the primary tanks were thermally stress-relieved at 1,100°F for one hour prior to completion of the secondary tanks and concrete shell.

5.3.5 Reinforced Concrete Tank

The primary tank is contained within a secondary tank which is externally reinforced within a concrete structure. The reinforced concrete tank is made up of two independent parts: (1) foundation and (2) walls and dome.

The foundation varies in thickness from 1 ft to 2 ft, and transmits the bearing forces from the tanks and concrete walls to the load-bearing backfill beneath the foundation. The concrete wall rests on a steel slide plate mounted on the foundation footing. The concrete varies in thickness from 18 in. in the walls to 15 in. in the dome.

Failure of the secondary tank would be indicated by collection of a portion of the leakage in slots located in the secondary tank foundation. Waste collected by the slots drains to a leak detection pit via an unencased pipe. The waste can be removed from the pit by installing a pump and pumping it to another tank.

The reinforced concrete structure is designed to withstand the most severe combination of operating and natural forces, including a breach of the primary tank with the resulting loads on the secondary steel tank and reinforced concrete structure.[1]

5.4 PUMP PIT AND SLUICE PITS

Above each of the 241-AY tanks is a pump pit, located at the center of the tank, and four sluice pits, each in a quadrant position. Above each of the 241-AZ tanks is a pump pit, located in the center of the tank, and two sluice pits located opposite each other.

---

*The tangent line is the level where the straight walls of the primary tank join the sloping sides of the tank dome.

The pump pits have approximate inside dimensions of 8 ft by 12 ft by 7 ft deep with 2 1/2-ft-thick concrete cover blocks. The walls are 1-ft-thick concrete.

The sluice pits have approximate inside dimensions of 6 ft by 8 ft by 7 ft deep with 2 ft thick concrete cover blocks. The walls are 1 ft thick concrete.

The pump and sluice pit covers are purposely not air tight to permit some air leakage into the tank. The pits have drains and base plate openings for a pump or sluice nozzle, going directly into the vapor space of the tanks. Air can leak in through the cracks between cover blocks and the penetrations in the blocks (i.e., holes for mechanisms to operate the sluice nozzles, valves, etc.).

5.5 TANK EQUIPMENT

Equipment particularly required for safe operation of aging-waste tanks includes airlift circulators (process air system) to provide agitation and minimize settling of solids, steam heater coils (site steam system) to preheat the tank, and vapor condensers (primary ventilation system) to handle the high moisture content of the vapor exhaust stream.

5.5.1 Process Air System

The process air system for the aging-waste facility is vital to the safe operation and integrity of the aging-waste tanks. It provides the air to airlift circulators which circulate the tank contents to minimize settling of solids and the possibility of overheating within the tanks. The process air system includes the following items:

- Air compressors
- Aftercooler separators
- Air receivers
- Filter/separators
- Piping between the compressor building and the individual tanks
- Airlift circulators within the tanks.

5.5.1.1 Air Compressor Building. A schematic of the compressed air system servicing the airlift circulators is shown in Figure 5-5. Process and Instrument Air is supplied to AY and AZ Tank Farms from the 241-A-701 Compressor Building. The 241-A-701 Building contains four oil-lubricated water-cooled compressors. Each compressor is powered by a 50 HP electric motor and will supply about 290 scfm at 50 psig.

9212562118 3

Up to three of the four compressors may be operated at one time, coming on sequentially as needed, to maintain the air supply. The fourth compressor is a spare. However, all four compressors are rotated routinely from operating to nonoperating status to ensure that they have about the same amount of use and that they remain operable. A dedicated portable diesel driven compressor is available at the Compressor Building as back-up.

The air from the compressors passes through an aftercooler/separator to remove moisture vapor and droplets. Cooling is supplied by raw water. The air then goes to the Air Receiver Tank and a high efficiency Filter/Separator to further remove water droplets and vapors. Downstream of this filter/separator the air line is divided into the process air supply and the instrument air supply. (The instrument air supply is passed through a pipe filter, a separator, and then through one of two silica gel dryers. The dryers are arranged in parallel and one is recharged while the other is in use. Recharge time is 8 hr.)

The process air is reduced to 35 psig through a pressure reducing valve, and then routed to the several tank farms. One line leaves the 241-A-701 building to the 241-AY Tank Farm. This line then branches to serve the 241-AZ Tank Farm also. Air is piped to the 241-AY-801 Instrument Building in the 241-AY Tank Farm and to the 241-AZ-801A Instrument Building in the 241-AZ Tank Farm.

Rotameters located in the 241-AY-801 and 241-AZ-801A Instrument Buildings are used to indicate air flow rate to the individual circulators. An adjoining raw water header and associated valving are also provided at this location for water flushing of the air lines. If a more rigorous flushing is required connections are available below ground level and at positions above each circulator.

5.5.1.2 Airlift Circulators. There are 22 airlift circulators in each of the 241-AY and 241-AZ Tanks. Circulator number 1 is located at the tank's center axis; numbers 2 through 8 are equally spaced about a 14.5-ft radius, and numbers 9 through 22 are spaced about a 27-ft radius. Circulators 1, 9, 12, 16, and 19 have lift risers that are 17 ft in length and require a solution volume of about 644,000 gal for submergence. The remaining 17 circulators are 22 ft long, and therefore need over 810,000 gal for total submergence. The lift riser lower ends are all 30 in. above the tank bottom.

Figure 5-6 contains an illustration of airlift circulators in elevation view and Figure 5-7 shows the plan view.

The airlift circulators are relatively simple devices consisting of two basic components: a vertical lift riser pipe 30 in. in diameter, and a foot piece (air nozzle) located within and near the lower end. A 6-in. pipe suspends the lift riser from the tank dome and concentrically extends to a point 8 in. above its lower end. The end of this pipe has been swaged to a 1.5-in. ID nipple. A 1-in. pipe, which supplies the motive air, is a removable insert that extends within the 6-in. pipe to 2 in. below the swaged nipple. This is the one component which can be replaced in the event of a pluggage. The entire unit is of mild steel construction.

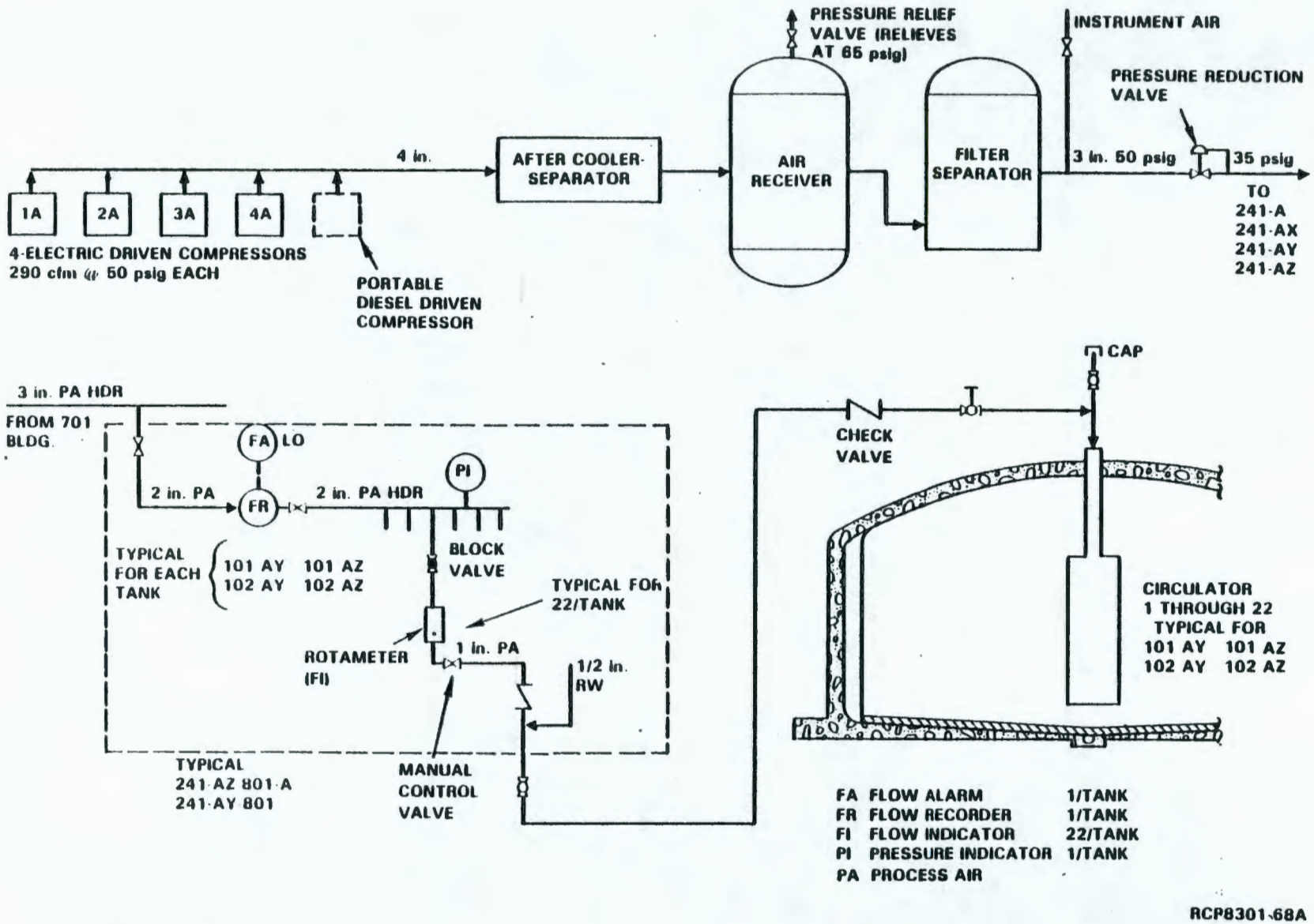

FIGURE 5-5. Schematic of the Compressed Air System for the Airlift Circulators.

9613449.0025

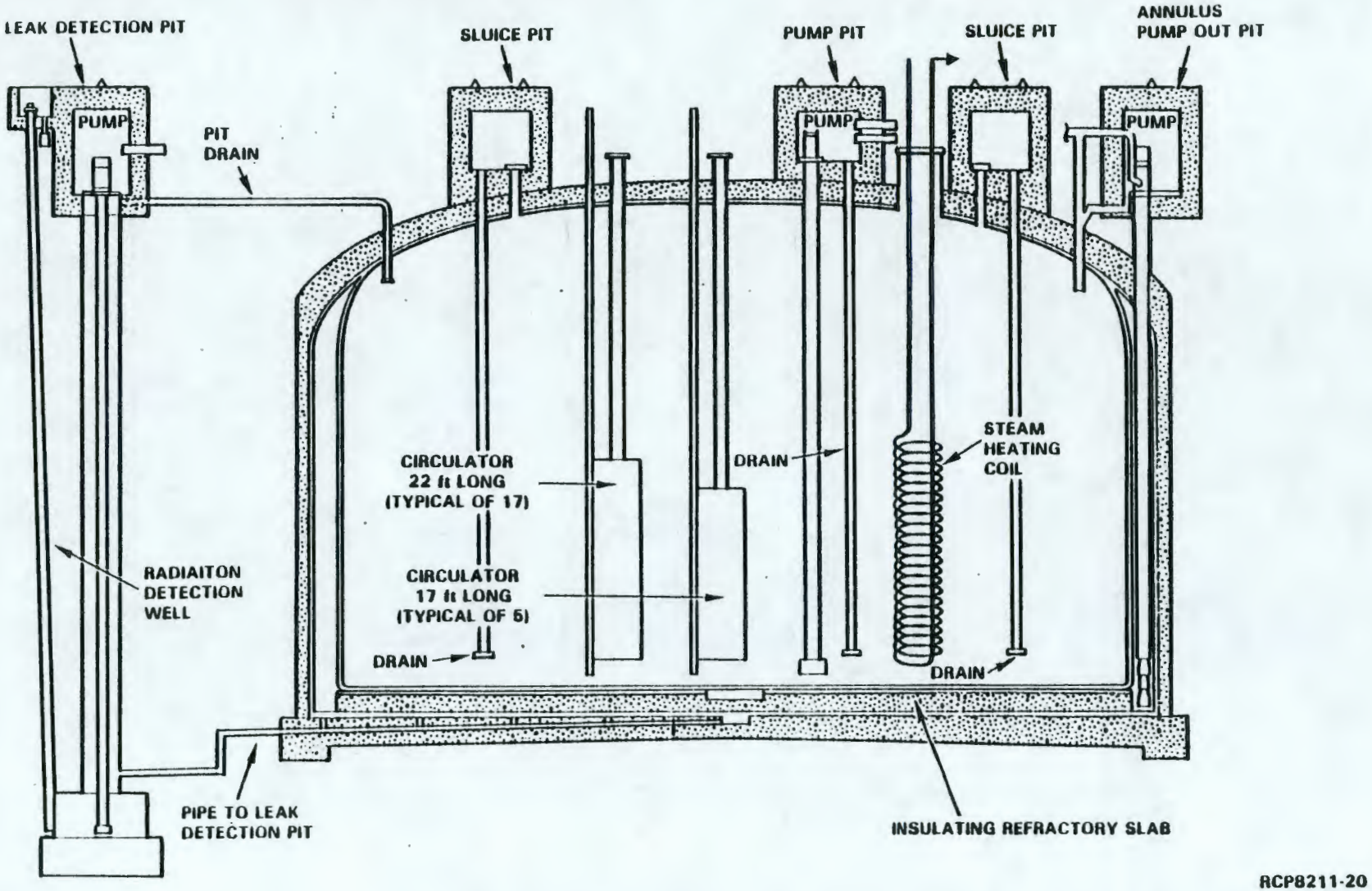

FIGURE 5-6. Composite Section--Aging-Waste Tank.

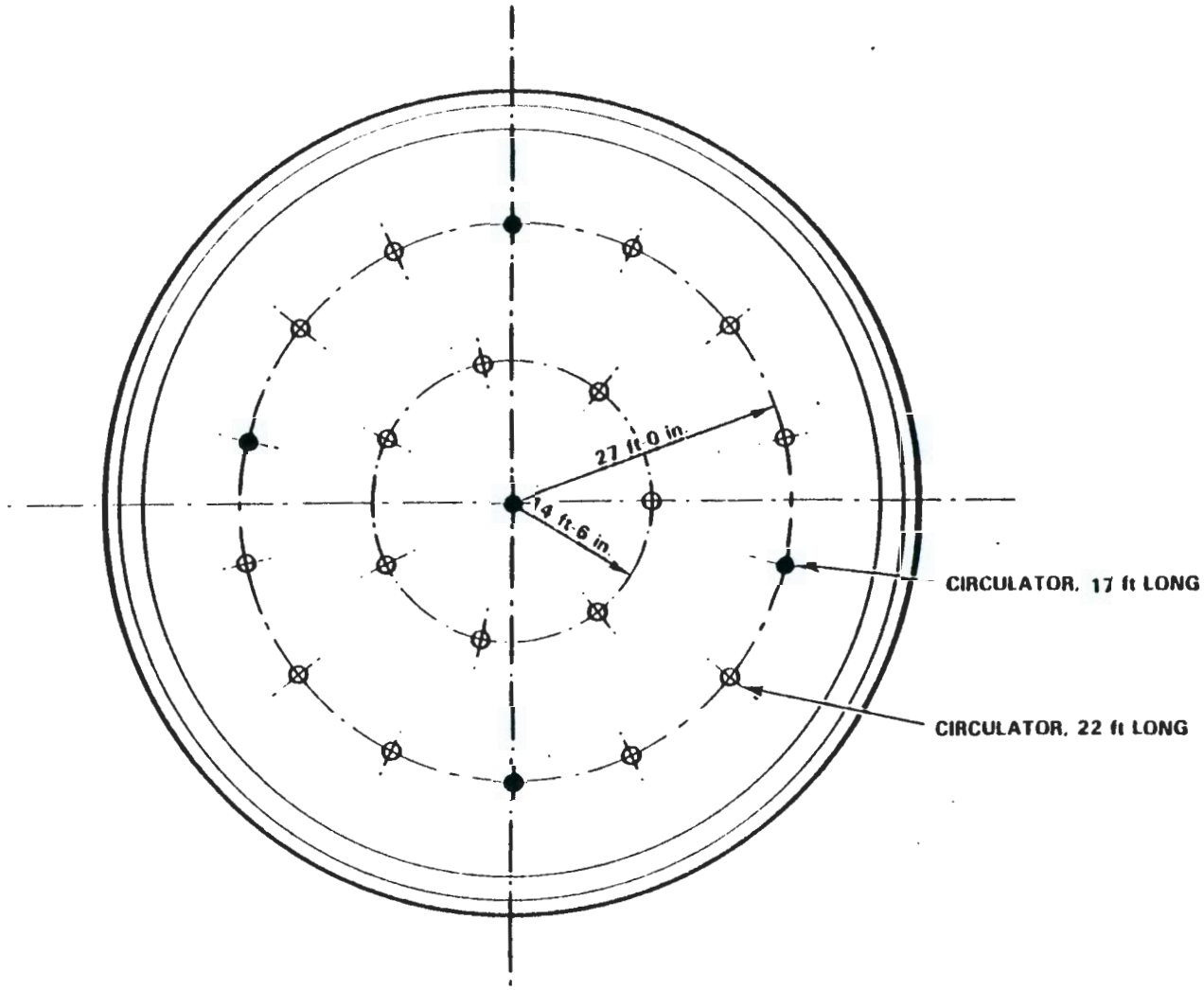

RCP8211-21

FIGURE 5-7. Plan View--Airlift Circulators.

The air injected into the lift riser at the foot of the air lift draws in liquid from the bottom of the tank, and pushes the fluids up the circulator and out the top. The large liquid flow rates generated within the circulators will create turbulant flow in the tank contents. Liquids flowing along the bottom of the tank and up the draft tubes will carry solid particles out the top of the circulator and be discharged in the upper region of the tank. The vertical fluid motion decreases the temperature differential between the top and bottom of the tank by transporting warm liquids and solids from the bottom to the cooler regions at the top.

A computer analysis of the adequacy of the circulator suspending and mixing capabilities was made by Pacific Northwest Laboratories (Ref. 18). Reference 19 discusses the adequacy of the process air system described in Section 5.5.1.1. Continuous operation of the compressors is ensured by connecting to an emergency diesel electric generator which starts automatically upon sensing a power loss.

5.5.2 Heating Coil

Each aging-waste tank has an internal steam heating coil with a heat transfer surface area of 1,010 ft^2 installed in a 42-in. riser in each one of the 241-AY and 241-AZ Tanks. Steam condensate from these coils normally discharges to the 216-A-8 Crib, but it is monitored and would be automatically diverted to the 241-A-417 Tank if contamination were detected. The steam coil is used to remove excess water from the aging-waste tank.

5.6 TANK INSTRUMENTATION

Each tank is provided with instrumentation systems monitoring operating parameters such as liquid level, temperature, leak detection, vapor pressure and radiation detection. Readouts are at a local instrument building in each tank farm, or in the 241-A-271 Control Building, or the 242-A Evaporator which is continuously manned. All essential instruments are tied into the Computer Automated Surveillance System (CASS) which reads out at the 2750-E Building and the 242-A Evaporator. Both locations are manned 24 hours a day.

5.6.1 Liquid Level

Each tank is equipped with an automatic liquid level gauge. The gauge sits on a tank riser and consists of a plummet suspended on a tape, tape reel, sight glass, control box, air purge, and water flush sprays. In operation, the controls periodically and automatically adjust the plummet position until electrical continuity between the plummet and the liquid surface is achieved. The tape reading is then converted to an electrical signal for readout. Each tank is also equipped with a high liquid level alarm.

5.6.2 Sludge Level

Sludge level detectors are installed in the tanks to detect the height of the solids level in the tanks. The device consists of a weight suspended by a predetermined length of cable from a capped riser. Readings are taken manually by removing the riser cap and attaching a handheld, calibrated tape to the sludge weight cable and lowering the weight to the solids surface. Sludge weight cables are long enough so that the hand held tapes do not dip into the liquid. These detectors are used in conjunction with temperature monitoring to warn of developing adverse conditions which could lead to overheating.

5.6.3 Specific Gravity and Mass

Grab samples of sludge will be periodically collected from the tanks for specific gravity determination. These data are used to calculate the total mass of the tank contents. In addition, the mass is determined by making a mass balance of the waste and condensate added to and removed from the tank. The masses determined by these two methods have agreed very well in past tank operations.

5.6.4 Temperature Monitoring

Each tank is equipped with iron-constantan thermocouples for monitoring temperatures in critical areas of the tank structure. There are 37 thermocouples installed within the working space of each tank. All of the 22 airlift circulators have attached thermocouples that extend to 3 in. above the liner bottom, a point where movement of waste should normally sweep the immediate area free of sludge. A circulator malfunction, which would allow the sludge to accumulate, would be indicated by a temperature rise at the associated thermocouple. Twelve other thermocouples are installed in wells and are used to measure the temperature gradient in the stored waste at four different locations 90° apart (N, E, S, and W) and 18 in. from the tank wall. There are three thermocouples in each well, and vertical placement is 3 in., 13 ft 1 in., and 24 ft 1 in. from the tank bottom. Three more thermocouples are installed at equidistant locations about a circle 12 ft from the tank's center and 3 in. above the bottom. These are designated sludge thermocouples and are used to measure temperature at points undisturbed by the airlift circulators. Temperature elements are also installed at the bottom of each of the three leak detection pits.

Twenty-five temperature elements are installed in the insulating concrete pad between the primary and secondary bottom liners. The thermocouples are located close to the underside of the primary liner and are equally spaced in three concentric circles of 7 ft, 21 ft, and 36 ft 6 in. from the tank's center. There are 4 thermocouples in the inner circle, 7 in the second, and 14 in the outer. Two additional thermocouples are also in contact with the outer surface of the primary shell. These are attached at a point 15 in. above the bottom of the tank (east and west sides).

9 2 1 2 5 6 2 1 1 8 9

Each of the two tanks has a total of nine structural thermocouples installed in the concrete foundation 2 in. beneath the secondary steel liner. There are three elements in each of three concentric circles of 4 ft, 21 ft, and 38 ft radii. The numbers of the remaining structural temperature elements vary.(2) Information from the thermocouples is fed into CASS which gives a computer printout once every 24 hours. Some of the previously mentioned thermocouples in the concrete have failed. A discussion of the condition of the thermocouples in concrete in the 241-AY tank is contained in a letter from C. M. Walker to C. C. Scaief, July 15, 1981.(6) The concrete thermocouples in the 241-AZ tank farm are discussed in SD-RE-OTR-026.(7) The data from these 2 sources is summarized in the following listing.

Tank	Location in concrete	Number of thermocouples	
		Total	Failed
101-AY	Dome	24	9
	Foundation	9	7
	Insulating concrete	25	0
102-AY	Dome	24	1
	Foundation	9	3
	Insulating concrete	25	2
101-AZ	Wall	12	1[a]
102-AZ	Foundation	9	1

[a]Not replaceable.

9 2 1 2 5 6 2 1 1 9 0

5.6.5 Leak Detection

Leakage from the primary tank would probably be first detected by the continuous air monitor upstream of the HEPA filter for the annulus exhauster. In addition, conductivity probes are installed in the annuli, process pits, and encasements. These areas are normally dry; the presence of 1/8 in. of liquid would activate the probe and sound an alarm in the instrument building to indicate a leak had occurred.

Leak detection capability is provided for the primary tank at the annulus. The annulus can be pumped out if necessary. Leakage from the secondary tanks is received into a waffle pattern in the concrete base. This in turn drains to a leak detection well where it can be detected and can be pumped out. In addition to conductivity probes, there is a radiation probe in a dry well adjacent to the leak detection pit. All of the leak detection probes alarm via the CASS.

5.6.6 Pressure

Tank pressure is monitored by measuring the differential pressure between the tank vapor space and the atmosphere. The pressure is transmitted to gauges and alarms in the A-271 Control Building. Insufficient vacuum also alarms on the CASS at the 2750-E Building and the 242-A Evaporator. These locations are manned 24 hour per day. Normal operating vacuum is 0.5 to 0.6 in. water gauge; the alarms are set at 0.25 in. water gauge.

5.6.7 Area Radiation Alarm Systems

Two outdoor area radiation monitoring systems are installed in the 241-AY farm and one in the 241-AZ farm. Each system consists of detector assemblies, readout instrumentation, recorders, local alarms, and central alarms. The detectors are located on poles at approximately 20 ft above grade to provide a large viewing area. The operation of the detectors is checked on a monthly basis.

The monitors are sensitive to and indicate gamma radiation from 0.1 mR/hr to 10 mR/hr. The monitors are set to alarm at about 5 mR/hr above background.

The radiation levels detected by each monitor are recorded continuously. Fail-safe alarms are included in each system. Audible and visual alarms are provided at each detector location, and a reset button is located at each alarm. Readout instrumentation is located in the tank farm instrument buildings (241-AY-801 and 241-AZ-801A). A reset button for the alarms is also provided at the readout location. High radiation and instrument failure alarms are annunciated in an always-occupied location, at 242-A Evaporator for all 200 East Area radiation monitoring systems. These systems also activate a general trouble alarm at the 2750-E Building CASS. However, the specific problem is not identified there, only the particular facility or complex of facilities involved.

5.7 VENTILATION

The ventilation systems for the underground tanks consist of the 702-A primary ventilation system, 702-A backup ventilation system, 241-AY-101 tank annulus ventilation system, 241-AY-102 tank annulus ventilation system and combined 241-AZ-101 and 102 tank annuli ventilation system.

5.7.1 702-A Primary Tank Ventilation System

The 702-A exhaust system services the 241-AY-101 and 102 Tanks, and 241-AZ-101 and 102 Tanks. It is comprised of three basic parts: the duct work, moisture removal, and the filtration components.

9 2 1 2 5 6 2 1 1 9 1

The six tanks in the 241-A tank farm may also be connected to this ventilation system by opening a single isolation valve in the exhaust ducting. A schematic of these components is shown in Figure 5-8. The isolation valve, in the vent header, part of Project B-419, isolates 241-A Tank Farm from the 702-A ventilation system and prevents vapors from aging-waste tanks from reaching the leaking dresser couplings in the 241-A Tank Farm SST vent line.[20] A portable exhauster, installed on Tank 105-A vents all of the 241-A Tank Farm.

5.7.1.1 Exhaust Ducting. The exhaust ducting for the 702-A exhaust system is comprised of individual underground ducts for each tank. Each individual tank ventilation duct is connected to a common header within each tank farm. The two individual tank farm headers are connected to a common header discharging to the first deentrainer (surface condenser, and then to the second deentrainer). Individual tank ducts, and the common tank farm complex header have loop seals. These can be filled, thereby isolating that portion of the system from the ventilation system, by closing the drain valve for the seal loop and adding water to the loop. This provides a full spectrum of isolation possibilities should the need arise. Project B-419 upgraded the 702-A vent header to prevent leakage of condensate through mechanical (Dresser) couplings. A new section of all-welded underground vent header has been installed containing thermal expansion loops with expansion encasement. The new header intercepts the old header so that all of the Dresser couplings have been bypassed. The Project B-419 provides compliance with DOE-RL Order 5820.2.[2]

5.7.1.2 Moisture Removal System. Three condensers are available to provide moisture removal from the exhaust stream. The exhaust air enters the condenser shell from the first deentrainer (K1-5-1) and is cooled by cooling-water tubes located inside the condenser shell. The process condensate drains by gravity to the 241-A-417 condensate tank. Process condensate is recycled to the AY and AZ Tanks to maintain the desired liquid level in these tanks. The excess liquid is diverted to 101-AN Tank, from which it is subsequently pumped to the evaporator feed tank and then reevaporated in the 242-A Waste Evaporator.

The condensers are cooled with raw water which discharges to the warm water sump and normally overflows to the Gable Mountain Pond or B-Pond. Backup cooling is provided by recycling the cooling water by pumping it from the warm water sump to a spray cooling tower, collecting it in a cold water sump, and pumping it back through the condensers. Another backup supply for cooling water is provided by a well. The data for each condenser is tabulated in Table 5-4.

The off-gases from the three condensers are vented through a second deentrainer (K1-5-2A) before entering the 702-A Ventilation Building.

This deentrainer was recently replaced and the performance criteria for the replacement unit is summarized as follows:[8]

- The flow into the secondary deentrainer consists of a maximum of 4,000 ft^3/min at a maximum temperature of 150°F and 30 in. of negative water pressure.

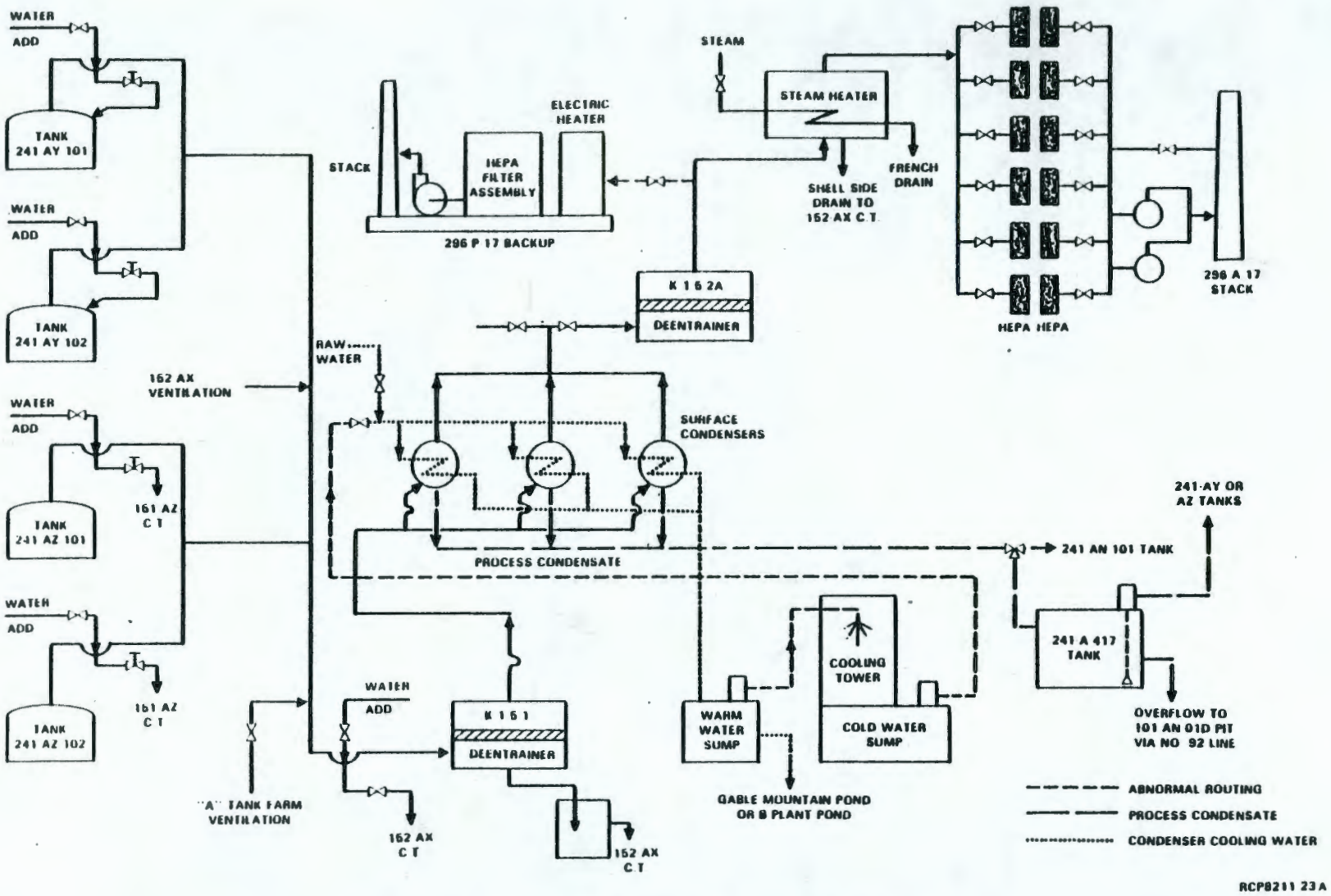

FIGURE 5-8. Primary Tank Ventilation Schematic.

9613449.0029
SD-HS-SAR-010
REV 1

TABLE 5-4. Condenser Design Parameters.

Size: 3 ft 1/2 in. dia by 9 ft 0 in. long.
Type: Shell and Tube
Surface: 1,340 sq. ft.

Characteristic	Shell side	Tube side
Fluid circulated	Process fluid	Water
Total fluid entering	20,000 lbs per hr	800 gal/min
Fluid condensed	20,000 lbs per hr	-
Temperature in	212°F	125°F
Temperature out	200°F	176°F
Operating pressure	12 in. H_2O vacuum	125 psi
Number of passes	1	6
Design pressure	External 5 psi	125 psi
Design temperature	212°F	212°F
Test pressure	10 psi	185 psi

- The new deentrainer will deentrain and remove moisture which will drain from the deentrainer into the vent header back to the condensers. It will be designed to withstand an internal negative pressure of 50 in. of water plus the earth load required for shielding. The top of the deentrainer will be removable so that the deentraining media can be replaced.

- Earth shielding for the deentrainer and concrete shielding for the valve pit will attenuate a gamma dose rate of 500 mR per hour at the deentrainer and vent header to a maximum of 0.5 mR per hour at ground level.

5.7.1.3 Filtration System. All of the ventilation components located in the 702-A Building (i.e., filters, stack fans, and stack) are considered to be the filtration system. The 702-A Building is divided into two sections along its longitudinal axis. The west (filter) side of the building houses a steam heater, a common exhaust header, and six banks of double HEPA filters. The HEPA filters "exhaust" to another common exhaust header on the east (fan) side of the building. The east side houses a common exhaust header, an exhaust fan and backup exhaust fan, the stack sampling/monitoring system, and the stack base.

Exhaust air leaving the second deentrainer is warmed by a steam heater. Air flows around and between steam coils, raising the temperature of the air approximately 20°F to prevent moisture from condensing on the HEPA filters and plugging them. The steam condensate from the steam heater drains to a french drain within the AX Tank Farm.

A total of twelve HEPA filters are used to filter the exhaust air of the 702-A ventilation system. The HEPA filters are arranged in six parallel banks, each bank contains two HEPA filters in series. There are no pre-filters associated with this system. All six banks are operated simultaneously.

The 702-A System has two 4,000 cfm exhaust fans (K1-5-1 and K1-5-2) which discharge to the 296-A-17 stack. After filtration, the vapor stream from each set of filters passes through one of two 16 in. stainless steel ducts depending on which fan is operating. Only one fan operates, while the second is a spare. The operating fan will automatically shut off when the vacuum in the filter outlet manifold falls below 15 in. water gauge. The spare fan will then be manually switched to the "ON" position. Each of the 16 in. ducts contains two Diaphragm Operated Butterfly Valves (DOV) which are located on each side of the exhaust fans. The inlet and outlet valves for the K1-5-1 fan are DOV 702-3 and DOV 702-4 respectively, while the inlet and outlet valves for the K1-5-2 fan are DOV 702-1 and DOV 702-2 respectively. The inlet and outlet DOVs are automatically controlled by the operation of either fan. The fan selector switch positioned to "ON" automatically opens the outlet DOVs while the switch positioned in either "OFF" or "STANDBY" automatically closes the outlet DOV valves.

In the event that both fans are inoperative a backup system is available (see Section 5.7.2).

The 296-A-17 Stack contains a three nozzle probe which draws a representative sample via two vacuum pumps to an Eberline CAM AMS-3 unit and record sampler.(9) These pumps draw a total 4.4 cfm sample through a flow splitter which directs one-half of the flow to the record sampler and the other half to the CAM unit. The sample in the CAM unit is monitored by a Geiger-Mueller device for beta and gamma radiation. A high-level alarm will be activated when the radiation sensed by the CAM reaches about 1,000 counts per minute. This alarm causes the CAM enclosure beacon to illuminate and a bell to ring while simultaneously activating an annunciator in the 241-A-271 Control Room. A combined failure alarm activates the enclosure beacon and also an annunciator in the 241-A-271 Control Room and alarm on CASS if any of the following occurs: a low record sample flow, a low CAM flow, and CAM failure or a High/Low sample temperature. A strip chart recorder is also located in the Control Room and alarm on CASS to record the radioactivity in the air at all times. A combined trouble alarm is also activated in the master control center in the 2750-E Building which is manned 24 hours a day. The record sampler collects a sample against filter paper for detection purposes. As a secondary measure, a filter pad in the CAM unit is also analyzed.(9)

9 2 1 2 5 6 2 1 1 9 5

5.7.1.4 Drains. The seal loop drains that service each of the 241-AY Tanks drain back to the same tank. Those that service the 241-AZ tanks drain to the 151-AZ collection tank. The remaining ventilation seal loops, drains for deentrainers and floor drains in the 702-A drain to the 241-AX-152 catch tank, either via a common seal pot which in turn drains there, via a line or via the 241-AX-152 diversion box. The 241-AX-152 catch tank in turn is jetted to a double-shell tank.

5.7.2 702-A Backup Ventilation System

The existing 702-A backup ventilation system includes two backup heaters, double HEPA filter banks, stack fan, stack, and stack sampler. This equipment is mounted on a skid platform and located near the discharge of the K1-5-2A Deentrainer. In order to bring it on line, it must be manually valved in.

The backup exhaust system unit is connected to the 24 in. vapor header of the primary system to the K1-5-2A Deentrainer. Vapor is drawn through an 18 in. port into the plenum of the backup exhauster system by a 7,000 cfm centrifugal exhaust fan.

Vapor in the plenum is drawn through an electric duct heater to prevent condensation of moisture on the HEPA filters. The duct heater consists of two thermostatically controlled 50 kW heater units. Both units will automatically start when the temperature of the passing vapor falls below 100°F. Similarly, the first heater will shut off at 130°F and the second at 170°F to prevent excessive heating of the filters.

The heated vapor stream is drawn through a filter box containing two banks of HEPA filters, which have been DOP tested to ensure a collection efficiency of 99.97%.

A 24 in. exhauster duct vents the filtered vapor to the atmosphere. A dry air sampler pulls a sample of the vapor stream through a filter. The filter is changed and analyzed for radioactivity on days when the portable exhauster is in operation.

The existing portable backup exhauster is rated at 7,000 scfm at 7 in. water gauge. This exhauster is an adequate backup for the 241-A-702 system until the time that the boil-off rate from the aging-waste tanks increases the differential pressure on the 241-A-401 surface condensers above the capacity of the portable exhauster. This will occur when the aging-waste tank liquid level is above 900,000 gallons. At that time liquid must boil off to maintain this limiting liquid level. This situation will occur about 15 months after PUREX startup.

To correct this problem a new portable backup exhauster has been ordered. The new portable exhauster has a rating of 4000 scfm at a 30 in. differential pressure. The higher differential pressure is needed because

the A-401 condensers will have a higher differential pressure as the condensate flow rate increases and the total system pressure drop will exceed the 7-in. water differential pressure rating of the present backup exhauster. The new portable backup exhauster should be received in 1983, providing sufficient time for installation, hookup, and prestart activities prior to the date it is needed.(10) The new exhauster will be set up to come on line automatically if both of the 702-A fans fail.

5.7.3 TK-241-AY-101 Annulus Exhaust System and 241-AY-102 Annulus Ventilation System

Each tank (101-AY and 102-AY) has a separate annulus exhaust system. Annulus ventilation systems consist of supply and exhaust components. The annulus ventilation system provides filtered air to the annulus and exhausts the air from the annulus through double HEPA filters. The purpose of the annulus ventilation system is to provide clean air to monitor for primary-to-annulus leaks. It also provides limited heat removal and containment in the event a small leak develops.

Air enters the annulus through 10% and 80% NBS prefilters. Air is distributed throughout the annulus from a central point beneath the primary tank. The even distribution of air aids in heat removal and primary tank leak detection. Primary tank leak detection is accomplished by: (1) monitoring the annulus exhaust air before the filters for the presence of radionuclides, and (2) conductivity probes, leak detectors and manual tapes in the annuli which detect liquid level.

Exhaust components consist of a heater, a monitoring system before filtration, double HEPA filtration, an exhaust fan, a record sampling system, and an exhaust stack. The maximum rated exhaust flow is approximately 3,500 scfm. However, the actual flow varies appreciably depending on fan operation and manual damper adjustments and is normally about 800 scfm.

Record sampling systems are provided on both the 296-A-18 and -19 stacks. These two systems are identical. Downstream of the fan and the HEPA filters, a portion of the exhaust air is drawn to and collected on a sample filter. This filter is collected weekly and sent to the 222-S laboratory for analysis. Sample flow is set at approximately 2.2 cfm.

5.7.4 Combined TK-241-AZ-101 and -102 Annuli Ventilation System

This system provides ventilation to AZ Tank Farm annuli (both 101-AZ and 102-AZ). A single ventilation system is used to provide supplemental primary tank cooling and early primary tank-to-annulus leak detection. Air enters through 8% NBS, 30% NBS, and 1 micron filters. Total air flow through both annuli is about 1600 scfm.

9212562197

A single record sampling system (296-A-20 stack) is provided for the combined 101-AZ and 102-AZ annuli ventilation system. The record sampler is identical to those described above for the 101-AY and the 102-AY annulus samplers.

5.8 UTILITIES AND SERVICES

5.8.1 Electrical System

The 241-AY and AZ tank farms are provided with normal, single line, interruptible electrical power. Normal electrical power is distributed at 120/240 V and 440 V.

The tank farms are floodlighted to 0.5 footcandle of illumination at the working level.

Two diesel generators are available at the 241-A-701 Compressor Building to supply emergency power. These generators will automatically start (using compressed air) when a power failure is sensed in the supply to the air compressors in the 241-A-701 Building or in the supply to the 241-A-702 ventilation fans. The first is rated at 480 V, 3 phase, 375 kVA. It will supply power via automatic transfer switches and motor control cabinets in 241-A-701 and 241-A-702 to the following:

- Two of the four air compressors located in the 241-A-701 Building
- Two spare outlets (15A)
- Three 5 kW heaters located in the 241-A-701 Building and their distribution panel
- One of the two primary ventilation fans for the 702-A HVAC System
- Lighting panelboard "LA" in 241-A-702.

The second generator is rated at 120/480V, 3 phase, 120 kVA. Upon sensing a power failure, this generator supplies power via automatic transfer switches to the following equipment.

1. Emergency Cooling water MCC-A4 (241-A-701)
   - Deep well pump
   - One of two lift pumps
   - Cooling tower fan No. 1 and No. 2
   - Lighting panel.

2. Condensate Pump Extension

- Condensate pump No. 1 and No. 2 ON/OFF switches at pit 241-A-417.

3. 241-A-271 Building MCC-A6

- Distribution panel ON/OFF switch
- Spare
- Panel "E" ON/OFF switch
  - Lighting and Instruments
  - Extension to DASC System.*

5.8.2 Steam Supply and Distribution Systems

The 241-AY and AZ tank farms are supplied with 225 psig steam which is generated in a central power plant in the 200 East Area. Some of the lines that distribute steam to the tank farms are buried. All of the above-ground lines are insulated.

5.8.3 Water Supply Systems

The 241-AY and AZ tank farms are supplied with 125 psig raw water from the 200 East Area water plant in single line piping. Backflow preventers are installed on all feed lines to the tank farms. The backflow preventers are routinely checked for operability as part of the preventative maintenance program.

Sanitary water is supplied to the tank farm change house (2707 AX Building) from the 200 East Area sanitary water plant.

Emergency water is supplied as make-up water from a deep well to the emergency cooling tower as required.

5.8.4 Air Supply Systems

Process and instrument air are generated in the 241-A-701 Compressor Building by four air compressors, two of which are on emergency power. A fifth diesel powered emergency compressor is parked outside.

---

*Data Aquisition and Signal Conditioning system.

9 2 1 2 5 6 2 1 1 9 9

5.8.5 Communications and Alarm Systems

Telephone communications are maintained between the tank farm control rooms, and the area master control center, located in 242-A-building in 200 East Area.

If the trouble is connected with the pump or with a leak, trouble alarms are annunciated in the master control center, in the tank farm control room, and at the tank. In responding to a general alarm at the master control center, a telephone call is made to the control room serving the tank farm involved to ascertain the specific problem. Reset buttons for all alarms are located in the control room; reset buttons are also located at each tank for pump alarms and leak detector alarms.

5.8.6 Fire Protection Systems

Fire hydrants are installed in the vicinity of all the tank farms. Generally, the hydrants are located just outside the tank farm area. Most of the hydrants are fed from raw water systems.

Portable fire extinguishing equipment is located in each of the tank farm control rooms located at the edge of the tank farm.

5.9 SITE SURVEILLANCE MONITORING SYSTEMS

There is a network of ground water monitoring wells and continuous air samplers in the 200 East and 200 West Areas which provide site monitoring coverage for all of the Hanford Separations Operations, including aging-waste tank farm operations.

5.10 COMPARISON OF CURRENT CONFIGURATION WITH CURRENT CRITERIA

The DOE criteria are intended to be general and not directed to specific components and their requirements. Design configurations of the Aging-Waste Facility which may not agree with current industry accepted safety criteria are listed below:

1. Backup Route Piping

   Portions of the piping for the backup route for transferring NHW from PUREX to the 241-AY and 241-AZ tanks are schedule-10 pipe. Schedule-10 piping can handle NHW solution transfer satisfactorily (up to 150°F) but may not withstand live steam because of damage from thermal stress.(11) Live steam could be introduced into the line either from transfer jet gassing or from using steam to unplug a plugged transfer line.

2. Intertank Transfer Piping

The intertank transfer piping is buried 3 to 5 ft deep and goes through pits which are covered with concrete cover blocks that are 20 to 30 in. thick. This piping was originally installed for terminal liquor transfers and the depth provided adequate shielding to reduce personnel exposure to much less than 0.5 mR/hr for that material (assumed to contain 6 Ci of Cs-137/gal).[12,13] Higher exposure readings at the pits can be anticipated when aging-waste is transferred (see Table 8-5). However, the earth cover over the piping should be sufficient to keep the above-ground exposure rate below 1.0 mR/hr when aging-waste is transferred between tanks. This waste would have a maximum concentration of fission products of 240 Ci/gal compared to the concentration of 5,000 Ci/gal transferred through the primary piping.

3. Backup Exhauster

The 702-A, 7,000 cfm backup exhauster is a portable skid-mounted unit which must be manually valved into service and started up. It does not come on line automatically upon failure of the primary unit. A new 4,000 cfm exhauster to replace the skid-mounted unit is on order and should be in place less than 15 months after PUREX startup.[10] The new unit will be installed so that it will come on line automatically when needed.

4. Primary Exhausters

The 702-A primary fans are electrically interlocked to switch whenever power is shut off to any one of them or if it fails mechanically.

5. Seismic Hardness of the Tank Farm Ventilation System

The 241-AY and 241-AZ tank farm ventilation system was not designed to meet Design Basis Earthquake criteria. A Phase I seismic analysis[14] was performed in 1971 and a Phase II analysis[15] was performed in 1972 to evaluate components of the 241-A-Farm waste storage tank ventilation system, which were critical. The analysis was performed for the combined effects of normally acting loads and the Criteria Design Base Earthquake Motion. The results are summarized in the following paragraphs.

Condenser Building 241-A-401: Under the most severe combination of soil lateral loadings, yielding of some of the condenser building exterior wall reinforcing and some concrete cracking would be expected to occur. Although the stress criteria would be exceeded at some locations, the combined horizontal and vertical wall span capacities are not exceeded and a collapse would be unlikely.

9 2 1 2 5 6 2 1 2 0 1

Condenser Building Hot Side Gallery Piping: Based on available pipe span and support data, the hot side gallery piping systems reviewed were determined essentially to be rigidly supported. Resulting seismic stresses would be small and would not lead to failure of essential equipment.

Condensate Storage Tank 241-A-417: The outer concrete structure of the condensate storage tank would be stressed near the range of inelastic action at several locations under the normal plus the root-mean-square combination of time varying loads. The theoretical ultimate capacity of the structure, however, is adequate to preclude a major failure. The inner steel liner vessel would be only lightly stressed.

Exhaust Stack in Filter Building 241-A-702: The analysis confirmed the overstress in the exhaust stack anchor bolts and stack section at the fan discharge wye.

Main Power Transformer, Switchgear, and Miscellaneous Items: The presently unanchored main power transformer and switchgear cabinets fail to meet seismic criteria.

6. Tornado Hardness of the Tank Farm Ventilation System

The 241-AY and 241-AZ ventilation system was not designed to meet maximum tornado conditions.(16) A preliminary assessment of tornado resistance of waste tanks and auxiliary systems was done in 1971.(17) It concluded that no structure damage should be experienced by the underground tanks and their envelop structures; however, depending on the specifics of the tornado and the area hit, part or all of the "surface" utilities and facilities could be destroyed. These "surface" utilities and facilities consist of steam, normal electrical power, emergency electrical power, instruments and controls, cooling water, "make-up water" systems (to replace that boiled off), condensers, instrument air, circulator process air, ventilation heaters, filters, exhausters, stack, deentrainer vessels, liquid seals in vapor system, and buildings housing instruments and equipment. The anticipated consequences of this destruction are discussed in Reference 17.

5.11 REFERENCES

1. DOE/EIS-0063, April 1980, Final Environmental Impact Statement, Waste Management Operations, Hanford Site, Double-Shell Tanks for Defense High-Level Radioactive Waste Storage, U.S. Department of Energy, Washington, D.C..

2. ARH-205, November, 1967, Design Criteria, PUREX AY Tank Farm, P. Hatch and G. C. Oberg, Atlantic Richfield Hanford Company, Richland, Washington.

3. ARH-1437, January, 1970, Design Criteria, PUREX AZ Tank Farm, P. Hatch, Atlantic Richfield Hanford Company, Richland, Washington.

4. ARH-MA-102, October 1972, 241-AY Tank Farm Information Manual, C. M. Walker, Atlantic Richfield Hanford Company, Richland, Washington,

5. ANSI/ASME BPV-VIII-2, 1980, ASME Boiler and Pressure Vessel Code, Section VIII, "Rules for Construction of Pressure Vessels," Division 2 'Alternate Rules', American Society of Mechanical Engineers, New York, New York.

6. Internal Letter, July 15 1981, "241-AY and 241-AZ Tank Theromocouples to be Connected to the New Data Aquisition and Signal Conditioning System (DASC)", C. M. Walker to C. C. Saief, Rockwell Hanford Operations, Richland, Washington.

7. SD-RE-OTR-026, January 1983, Operability Test Report for SD-RE-OTP-026, "OTP for thermocouples in 241-AZ Tank Farm," Rockwell Hanford Operations, Richland, Washington.

8. SD-399-CDR-001, June 1982, Conceptual Design Report, 241-A-702 Ventilation System Upgrade, Project B-399, R. B. Gunther, Rockwell Hanford Operations, Richland, Washington.

9. SD-RE-SS-001, December 1982, 241-A-702 Vessel Ventilation System Information Manual, A. J. Diliberto, Rockwell Hanford Operations, Richland, Washington.

10. Internal Letter, 65950-83-891, March 16, 1983, "Review of 241-A-702 Portable Exhauster Need Date" R. B. Bendixsen to J. F. Albaugh, Rockwell Hanford Operations, Richland, Washington.

11. SD-RE-ES-005, February 1982, Project B-220b - A Rescoping of PUREX Waste Transfer Facilities, A. L. Shord, Rockwell Hanford Operations, Richland, Washington.

12. ARH-CD-751, October, 1976, Conceptual Design Report, Terminal Liquor Transfer Facility to the 241-AY Tank Farm, J. S. Garfield, Atlantic Richfield Hanford Company, Richland, Washington.

13. ARH-CD-718, October, 1976, Conceptual Design Report, Terminal Liquor Transfer Facility to the 241-AZ Tank Farm, J. S. Garfield, Atlantic Richfield Hanford Company, Richland, Washington.

14. ARH-R-96, July 1971, Phase I Seismic Review, 241-A-Farm Waste Storage Tank Ventilation System at Hanford, Washington (JABE-ARHCO-02), John A. Blume and Associates, Engineers.

15. ARH-R-116, April 1972, Phase II Seismic Review, Waste Storage Tank Ventilation System, 241-A Farm, Hanford, Washington, (JABE-ARHCO-03), John A. Blume and Associates, Engineers.

9 2 1 2 5 6 2 1 2 0 3

16. RHO-CD-1117, May 1981, Seismic/Tornado Design Criteria for Evaluation of Existing Structures and Equipment, PUREX Plant Facilities, F. R. Vollert, Rockwell Hanford Operations, Richland, Washington.

17. Letter, AEC No. 2135, July 27, 1971, "Tornado Resistance of Waste Tanks and Auxiliary Systems," R. P. Corlew to O. J. Elgert, DOE-RL, Richland Washington.

18. FATE-83-120, July 1983, L. Loren Eyler and D. L. Oliver, "Sediment Settling and Resuspension in Waste Storage Tanks with Air Injection Circulators Including Effect of Solids Concentration - Dependent Viscosity," Pacific Northwest Laboratory, Richland, Washington.

19. Letter, 65950-83-1116, May 24, 1983, J. A. Reid/M. I. Fineman to H. L. Winters, "Tank Farm Readiness Review - Air Lift Circulators," Rockwell Hanford Operations, Richland, Washington.

20. SD-RE-SS-001, December 9, 1982, "241-A-702 Vessel Ventilation System Information Manual," Page 22, A. J. Diliberto, Rockwell Hanford Operations, Richland, Washington.

6.0 PROCESS SYSTEMS

6.1 INTRODUCTION

Reprocessing of spent nuclear fuel from N Reactor is performed in the PUREX Plant. Fission products are the principal radionuclides in the liquid waste resulting from these reprocessing operations. These wastes are concentrated as liquid nitrates in the high level waste (IWW) stream and are then prepared for storage by neutralization in the PUREX Plant. The neutralized high level waste (NHW) stream is transported from the PUREX Plant and stored in underground storage tanks in the tank farms. The transport and storage of the NHW is provided by the Aging-Waste Tank Storage Facilities. The primary purpose of the Aging-Waste Tank Storage Facilities is to provide confinement of the NHW during an aging period. Aging-Waste Tanks are defined as tanks containing waste generating more than 70,000 Btu/hr. This heat is generated by radioactive decay of radionuclides within the waste. In order to maintain the integrity of the tanks and to safely contain the wastes, all process systems within the facility are intended to aid in controlling the effect of this decay. Since the decay process can not be "shut down," the safe operation of the facility depends on the continuous operation of the control systems (ventilation and process air).

6.2 WASTE CHARACTERIZATION

The tentative operating plans for the PUREX Plant had scheduled 17 separate reprocessing campaigns between April, 1984 and June, 1987. An earlier startup date of November, 1983 is now possible. However such a startup date would not affect the conclusions of this SAR. The amount of fuel reprocessed during each campaign and the age of the fuel reprocessed will vary, though all fuel will be cooled a minimum of 180 days from the time it is discharged from the reactor until it is reprocessed in the PUREX Plant. The total irradiation time of the fuels in the reactor will also vary, as batches of fuel containing 6%, 9%, and 12% ^{240}Pu will be reprocessed.

The composition of the waste in the Aging-Waste Tank Facilities will vary with time. The chemical composition, fission product content, and important physical properties such as heat generation rate of the waste are discussed below.

6.2.1 Fission Products Concentration

The fission products concentrations of the NHW leaving PUREX will vary. For purposes of this SAR a highly concentrated fission product stream of NHW was assumed to be routed to the Aging-Waste Tank Facilities. This "worst case" waste stream is based on processing 180-day-cooled, 6% ^{240}Pu fuel with the waste concentrated to 190 gal per metric tonne of uranium (MTU). This fission product mixture, listed in Table 6-1, was used for shielding analysis of the primary waste transfer piping.

9212562120 5

TABLE 6-1. Worst Case Fission Product Content of PUREX NHW After Concentration.

Isotope	Fission product concentration (Ci/gal)[a]
Sr-89	250
Sr-90	47
Y-90	47
Y-91	390
Zr-95	560
Nb-95	1,100
Ru-103	120
Rh-103m	120
Ru-106	160
Rh-106	160
Cs-134	8
Cs-137	53
Ba-137m	50
Ce-141	87
Ce-144	880
Pr-144	880
Pm-147	170
Total	5,100

[a]Basis: 6% ^{240}Pu fuel, 180-day cooled and waste concentrated to 190 gal/MTU.

The expected fission product concentrations in the first aging-waste tank are listed in Table 6-2. This chronology of campaigns for the material currently projected to be processed is designed to provide a worst case for heat loading in the tank. Other projected schedules would produce lower heat loading. The concentrations of important fission products and their total concentration in the tank at the end of each campaign are presented in the table. When the first tank has been filled, the waste will be routed to the second aging-waste tank. The concentrations of important fission products in the second tank at the end of each campaign are presented in Table 6-3. A plot of the fission product concentration as a function of time for the aging-waste tanks is shown in Figure 6-1. The tank waste compositions given in Tables 6-2 and 6-3 serve as the basis for the tank analysis.(1)

6.2.2 Plutonium Concentration

Each batch of high level waste is sampled in the PUREX Plant before the batch is released and sent to the Aging-Waste Tank Facilities. The measurement of plutonium in the waste stream is important for detection of high plutonium losses in solvent extraction operations. If a high plutonium concentration is found, the batch of waste will be recycled for rework and recovery of the plutonium. A record of the total amount of plutonium routed to the Aging-Waste Tank Facilities will be maintained. The maximum amount of plutonium permitted in a single aging-waste tank is 50 kg, and the limit on concentration of any batch that is transferred is 0.05 g/gal based on criticality prevention considerations. In addition, for each batch the maximum allowable plutonium density after in-tank concentration is one gram per liter.(2)

The concentration of total plutonium isotopes in the NHW stream leaving PUREX will be approximately 1.6×10^{-3} g/gal. Based on 190 gal/MTU of concentrated NHW, approximately 1.5 kg of plutonium would be accumulated in the first aging-waste tank as a result of processing 4,200 MTU through the PUREX Plant.(3)

In the preparation of the 102-AZ tank for use as the first aging-waste tank as much of the solids as possible will be removed by flushing with water. The heel and solution will be sampled to determine the amount of plutonium already in the tank. This amount will then be included in the total plutonium allowed in the tank.

6.2.3 Other Transuranics Concentration

Other transuranics, principally neptunium and americium, are present in the NHW. The concentration of neptunium in the NHW will be 0.037 g/gal, and the concentration of americium 0.0045 g/gal.(3)

9212562127

TABLE 6-2. Estimated Maximum Concentration of Fission Products in the First Aging-Waste Tank (Ci/gal).

Campaign	4	3A	3B	2	3C	7	15	14	10	6	1	11	13
Approximate end date[a]	7/84	10/84	1/85	4/85	5/85	6/85	8/85	1/86	3/86	4/86	6/86	8/86	9/86
Isotope													
Sr-89	0.95	0.35	1.69	0.37	14.8	7.88	3.10	0.49	3.22	1.50	0.69	4.88	4.03
Sr-90	1.25	3.22	5.45	6.49	7.83	10.2	14.1	17.3	18.6	21.4	24.0	25.2	25.5
Y-91	2.03	0.91	3.76	1.02	22.6	13.1	5.85	1.18	6.20	3.19	1.65	8.79	7.64
Zr-95	2.51	1.25	4.76	1.45	23.3	14.2	6.78	1.57	7.26	3.96	2.16	9.94	8.87
Nb-95	3.58	1.63	6.65	1.58	55.6	28.1	11.1	2.09	11.6	5.71	2.91	18.0	14.8
Ru/Rh-103	0.19	0.05	0.33	0.05	6.32	2.81	0.85	0.08	0.85	0.32	0.12	1.48	1.09
Ru/Rh-106	1.96	3.56	6.50	5.57	8.48	7.94	7.95	6.21	8.12	7.35	6.62	8.44	8.65
Sb-125	0.07	0.15	0.26	0.27	0.35	0.39	0.49	0.48	0.54	0.55	0.55	0.61	0.61
Te-127	0.04	0.04	0.10	0.05	0.21	0.15	0.10	0.04	0.11	0.08	0.05	0.13	0.13
Te-129	--[b]	--	0.01	--	0.21	0.08	0.02	--	0.02	0.01	--	0.04	0.03
Cs-134	0.06	0.13	0.22	0.22	0.29	0.35	0.51	0.49	0.54	0.55	0.54	0.58	0.58
Cs-137	1.30	3.36	5.68	6.77	8.16	10.9	15.1	18.8	20.2	23.3	26.3	27.5	27.9
Ce-144	16.5	27.0	51.0	40.4	67.6	60.7	53.9	38.8	56.0	48.9	42.7	59.4	61.1
Pm-147	4.04	9.14	15.8	16.4	21.2	22.6	26.9	26.8	29.6	29.8	29.4	32.7	33.3
TOTAL	34.4	50.7	102	80.6	237	179	147	113	163	147	138	198	194

[a]Actual dates and order of campaigns may vary; but any changes would not lead to concentrations greater than those listed here for completion of campaign 3C.

[b]Indicates less than 0.01 Ci/gal.

TABLE 6-3. Estimated Maximum Concentrations of Fission Products in the Second Aging-Waste Tank (Ci/gal).

Campaign	13	12	5	8	9	16	17
Approximate end date[a]	10/86	10/86	12/86	2/87	3/87	5/87	6/87
Isotope							
^{89}Sr	0.29	0.22	0.10	0.05	0.03	6.80	7.01
^{90}Sr	0.17	0.35	2.87	4.19	4.59	6.26	6.67
^{91}Y	0.55	0.44	0.23	0.13	0.09	11.66	12.29
^{95}Zr	0.64	0.53	0.29	0.17	0.12	12.77	13.5
^{95}Nb	1.01	0.80	0.40	0.23	0.16	23.6	24.6
$^{103}Ru/Rh$	0.07	0.05	0.02	0.01	0.01	2.22	2.25
$^{106}Ru/Rh$	0.29	0.46	0.42	0.38	0.36	3.64	4.30
^{125}Sb	0.01	0.02	0.03	0.03	0.03	0.13	0.15
^{127}Te	0.01	0.01	0.01	--	--	0.13	0.15
^{129}Te	--[b]	--	--	--	--	0.06	0.06
^{134}Cs	0.01	0.02	0.02	0.02	0.02	0.11	0.13
^{137}Cs	0.18	0.37	3.22	4.56	4.96	6.71	7.13
^{144}Ce	2.56	3.73	3.25	2.89	2.67	32.2	37.7
^{147}Pm	0.57	1.06	1.41	1.54	1.55	7.42	8.76
Total	6.34	8.05	12.3	14.2	14.6	114	125

[a]Actual dates and order of campaigns may vary; but any changes should not lead to concentrations greater than those listed here.

[b]Indicates less than 0.01 Ci/gal.

9 2 1 2 5 6 2 1 2 0 9

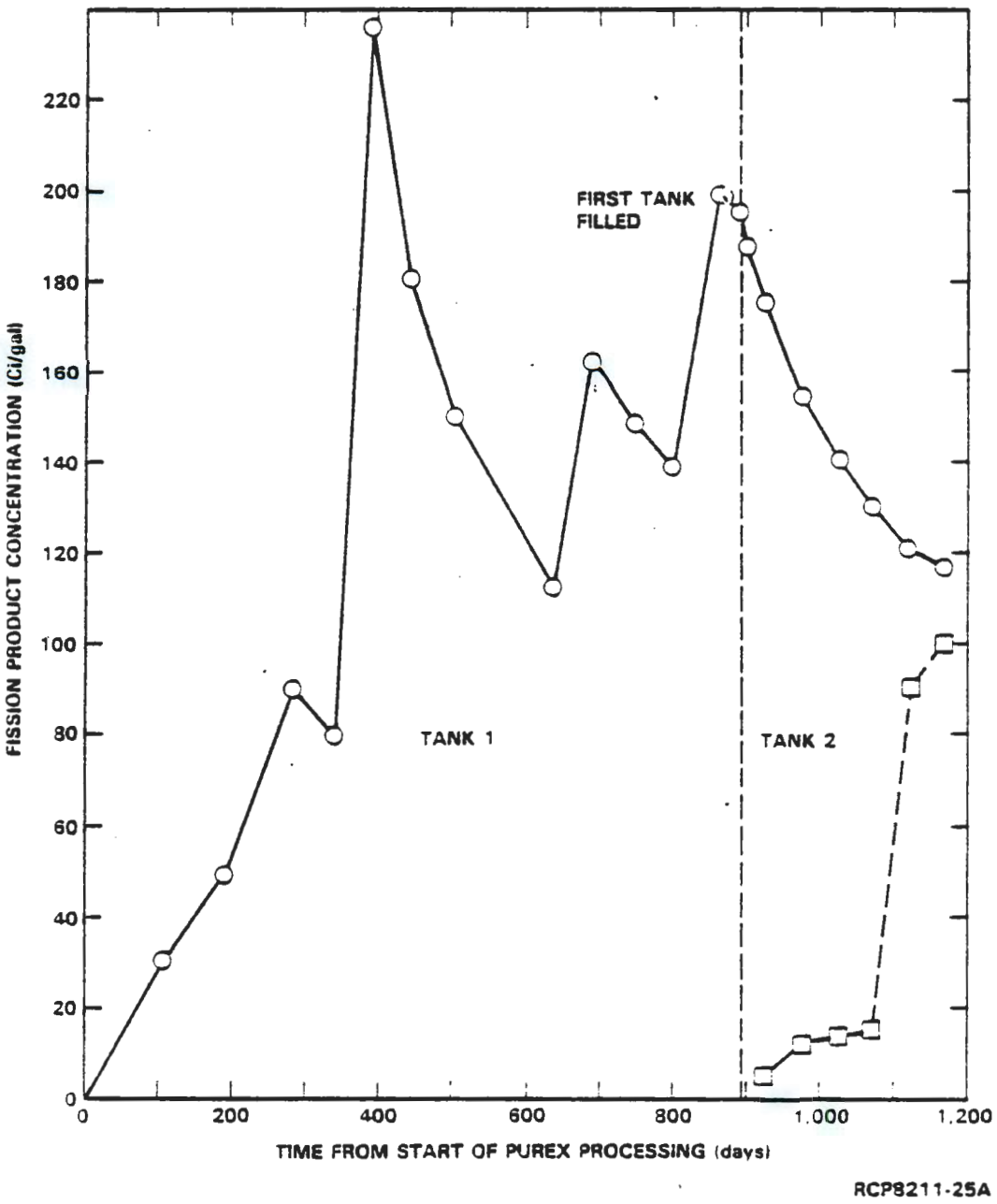

FIGURE 6-1. Fission Product Concentrations in Aging-Waste Tanks as a Function of Time.

6.2.4 Hydrogen Formation and Accumulation

Hydrogen gas is produced by the radiolytic decomposition of water present in the radioactive waste. The rate of formation of hydrogen gas in the waste tanks is estimated to be 1.2 cm^3 H_2/Whr.[4]

It is highly improbable that hydrogen gas could accumulate in the aging-waste tanks to explosive levels because of large air-sweeps through the tank. Air is introduced into the waste tanks through the submerged air spargers and by inleakage, and removed from the tank vapor space by the forced air ventilation system at a rate of about 600-800 scfm. The peak hydrogen generation rate will be less than 1 scfm. The lower flammable range for hydrogen is 4% by volume.

The possibility of accumulating hydrogen gas at explosive levels in nonboiling isolated waste storage tanks has been studied.[5-8] It has not been shown that hydrogen can accumulate to dangerous levels. Vapor space samples have been taken from various nonboiling waste storage tanks and no trace of hydrogen has been found in Hanford waste tanks.

6.2.5 Heat Generation

The heat generation in the first aging-waste tank will be about 650,000 Btu/hr at the end of the first campaign and will peak, with fluctuations, at about 4,000,000 Btu/hr for the worst case. When the tank has been filled, the net heat generation will gradually decrease. The net heat generation rate is listed in Table 6-4 and illustrated in Figure 6-2.[1]

6.2.6 Salt Concentration

The concentration of important ions in the NHW routed to the aging-waste tanks are as follows:[3]

Hydroxide	-	1.0 Molar
Sodium	-	5.7 Molar
Nitrate	-	3.9 Molar

TABLE 6-4. Maximum Heat Generation Rate in Aging-Waste Tanks.

Campaign	Approximate end date	Days from startup	Heat loading (BTU/hr)	Type fuel added	MTU fuel added	Average N Reactor discharge date
4	7/84	109	651,000	6[a] (1.15)[b]	313	7/83
3A[c]	10/84	189	975,000	6 (0.95)	506	1/83
3B	1/85	278	1,930,000	6 (0.95)	563	1/84
2	4/85	341	1,510,000	6 (0.95)	290	8/81
3C	5/85	393	3,930,000	6 (0.95)	331	11/84
7	6/85	438	3,070,000	12 (0.95)	285	2/79
15	8/85	505	2,530,000	12 (0.95)	428	4/81
14	1/86	639	1,920,000	12 (1.15)	423	11/76
10	3/86	694	2,790,000	6 (0.95)	350	5/85
6	4/86	749	2,500,000	12 (0.95)	350	9/77
1	6/86	804	2,320,000	12 (0.95)	350	8/75
11	8/86	860	3,340,000	6 (0.95)	321	12/85
13	9/86	889[d]	3,310,000	6 (1.15)	91	12/85
13	10/86	902	115,000	6 (1.15)	42	12/85
12	10/86	923	150,000	6 (1.15)	47	2/85
5	12/86	978	221,000	12 (0.95)	350	1/74
8	2/87	1,026	250,000	9 (0.95)	273	2/73
9	3/87	1,057	255,000	9 (1.15)	83	12/72
16	5/87	1,128	1,930,000	6 (0.95)	422	9/86
17	6/87	1,162	2,140,000	6 (1.15)	105	12/86

[a]Percent ^{240}Pu.

[b]Percent ^{235}U

[c]A, B, and C are subcampaigns of campaign 3.

[d]Table is based on a 4/84 startup which provides conservative parameters for the assessment of the safety of the Aging-Waste Tank operations. Under this scenario the first tank is filled after 889 days. Earlier PUREX startup would not significantly change the maximum heat generation rate.

9 2 1 2 5 6 2 1 2 1 2

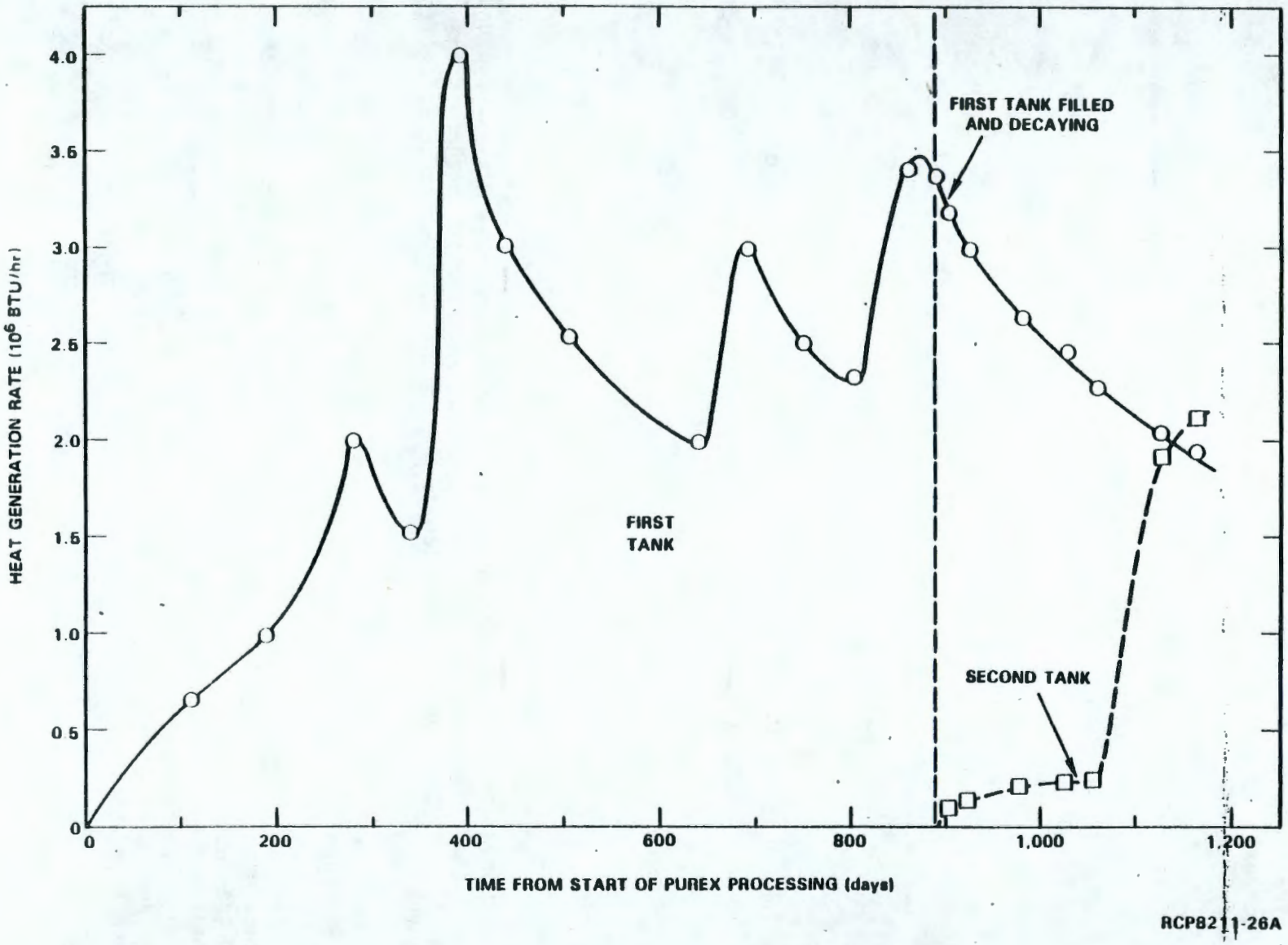

FIGURE 6-2. Heat Generation Rate in Aging-Waste Tank as a Function of Time.

9613449.0039

The concentration of hydroxide, nitrate and nitrite ions in the Aging-Waste Tanks will be controlled as specified in Reference 9, a portion of which is reproduced below:

VARIABLE	SPECIFICATION LIMIT
For solutions with nitrate predominant (NO_3^- OH^-)	
NO_3^-	$\leq 5.5M$
For $3.0M < NO_3^- < 5.5M$	
OH^-	$\geq 0.8M$
$OH^- + NO_2^-$	$\geq 1.2M$
For $1.0M < NO_3^- < 3.0M$	
OH^-	$\geq 0.8M$
$OH^- + NO_2^-$	$\geq 40\%$ of $< NO_3^- M$
For $< 1.0M$ NO_3^-	
OH^-	$\geq 0.01M$
NO_2^-	$\geq 0.01M$

6.2.7 NH_3 Concentration

Ammonia (NH_3) could lead to the formation of ammonium nitrate (NH_4NO_3) which could clog exhaust filters and could be an explosion hazard in the event of a fire. The concentration of NH_3 in the aging-waste tanks will be less than 0.01M.

6.2.8 Organics

Separable organics are not expected in aging tanks except from non-routine operations at PUREX. An organic layer will not extract plutonium from the waste into a concentrated layer within the tank since the organic-aqueous distribution coefficient in basic solutions causes precipitation of plutonium in aqueous phase. Therefore, there is not a criticality hazard from separable organic. Any separable organic will be rapidly distilled from the tank due to the high temperature of the aging waste. The organic would collect in the A-417 tank. Due to the sugar denitration process an undetermined amount of dissolved organics are present in the aging-waste tanks. These dissolved organics cannot lead to an organic layer containing concentrated plutonium.

6.2.9 Physical Properties

The physical properties of the NHW routed to the aging-waste tanks are as follows:

Density	1.2 g/cm^3
Viscosity	~2 centipoises

The temperature of the waste in the aging-waste tanks will range from 180° to 275°F (the maximum expected temperature in the solids). Initial tank temperature will be 140°F, and the maximum boiling temperature will range from 210°F to 220°F.

6.2.10 Vapor Phase Fission Product Content

Based upon the maximum fission product concentration in the liquid phase, the fission product activity in the tank air space has been calculated to be 50 Ci. This value is used in the subsequent consequence analysis. Figure 6-3 represents a cross section of a primary aging-waste tank showing the fission product distribution in the liquid and vapor phases at the time of the postulated maximum activity in the tank.

6.3 STORAGE TANK PROCESS

The storage tanks that will be used in the Aging-Waste Storage Facility consist of those in the AY Tank Farm (TK-241-AY-101 and TK-241-AY-102) and the AZ Tank Farm (TK-241-AZ-101 and TK-241-AZ-102). The 101-AZ Tank is scheduled to be filled first. The 102-AZ Tank will serve as the aging-waste tank spare. When 101-AZ has been filled, 102-AZ will be put into service for receiving NHW, and 102-AY will serve as the aging-waste tank spare. (This safety analysis report covers events that might occur in the time period from the restart of PUREX operations until the wastes generated in the currently planned campaigns have cooled to where they are no longer classed as aging wastes.) For any future operations after the second tank is full, 102-AY would be the next tank used to receive NHW and 101-AY would serve as the aging-waste tank spare.

6.3.1 Storage Tank Operations

Initially the tank will be agitated and emptied to near a minimum heel (at least 18 in. of liquid will be maintained in the tank). The tank will then be filled to 650,000 gal with water. Sufficient supernate will be maintained in the heel to meet corrosion control specifications upon dilution with water.

9 2 1 2 5 6 2 1 2 1 5

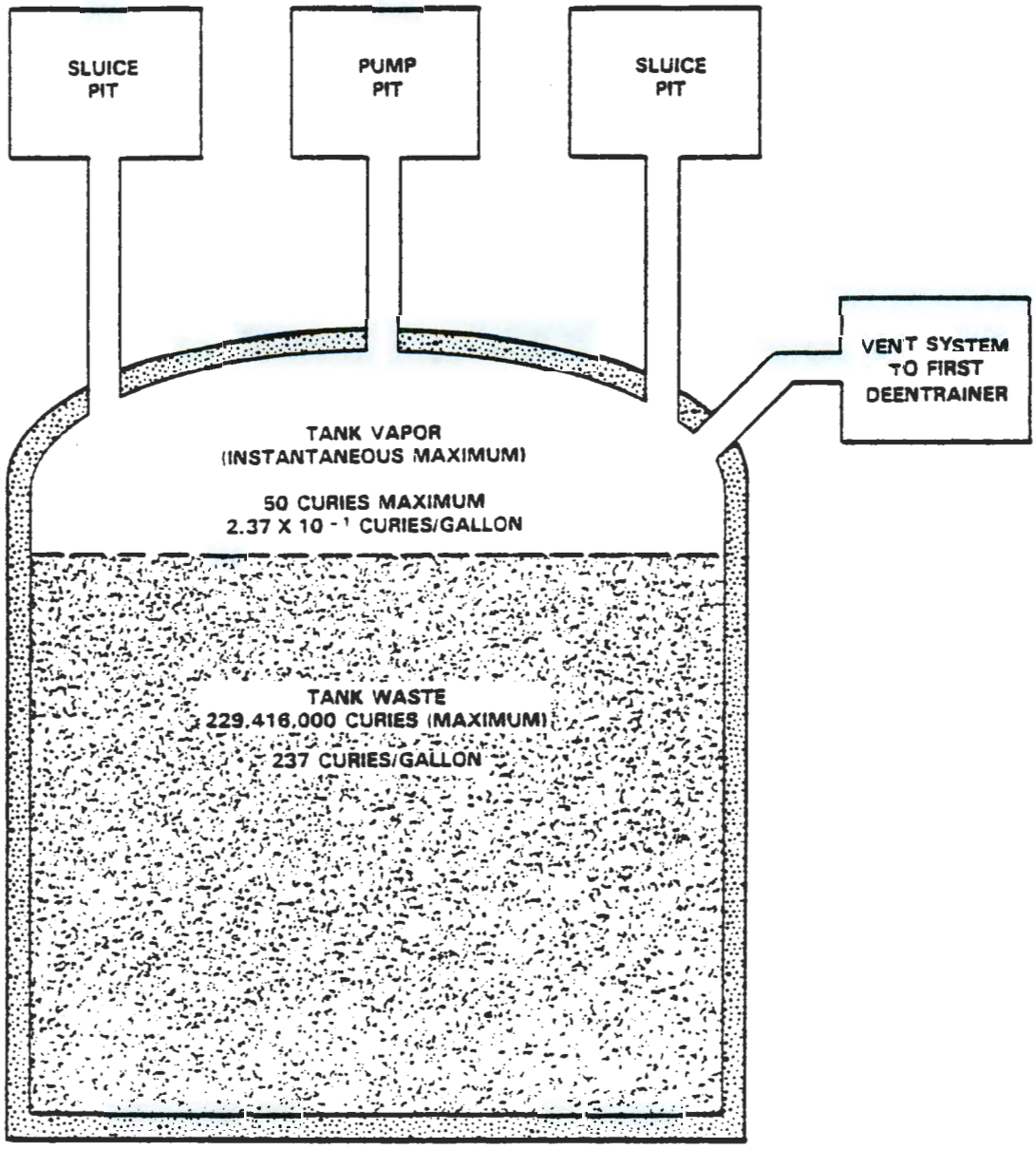

FIGURE 6-3. Distribution of Fission Products in Aging-Waste Tank at Time of Maximum Activity.

The procedure for initial filling operations for an aging-waste tank is as follows:

1. Sample current tank contents of the aging-waste tank to be used.

2. Use the laboratory analysis results to calculate minimum liquid heel that should be left in the tank so that the resulting water or supernate addition to 650,000 gal does not violate the low composition specification limits (OH^- $\geq$.01 M and NO_2 $\geq$.011 M).

3. Agitate tank contents to suspend old solids and pump tank to the small heel.

4. Fill to 650,000 gal with water.

5. When NHW addition starts, turn on air to the five shorter airlift circulators.

6. Allow the liquid level to rise ___ at the 810,000 gal liquid level, turn on the remaining airlift circulators.

7. When the 968,000 gal volume has been attained, raise the waste temperature at a rate not to exceed 24°F/day until both the desired tank level is being maintained (968,000 gal) and the boiloff rate matches the NHW addition rate.

6.3.2 Storage Tank Process Equipment

6.3.2.1 Steam Heating Coil. Each of the aging-waste tanks is equipped with a steam coil hung from a riser at the top of the tank. The steam coil is used to maintain the tank contents at the desired operating temperature and liquid level, when heat is needed. The coil has a surface area of 1,010 ft^2 and will transfer approximately 3 x 10^6 Btu/hr with a temperature differential of 20°F. This heating system can also be used, if needed, to drive off water to provide space for the addition of more NHW solution.

6.3.2.2 Air Lift Circulators. There are 22 air lift circulators installed in each tank. The circulators agitate the tank contents. They also serve to provide heat removal control, provide forced circulation, and suspend solids to prevent temperature excursions. Design air flow through the circulators is a maximum of 20 scfm. The anticipated flow is 3 to 5 scfm.

6.4 VENTILATION

The Aging-Waste Tank Facility is equipped with ventilation systems which provide heat and vapor removal and containment. Each tank is vented through the primary ventilation system. The annuli are also vented. A back-up ventilation system is in place to provide emergency ventilation service to the tanks in case of loss of vacuum to the primary ventilation system.

6.4.1 Primary Ventilation System

The primary ventilation system provides containment of radioactivity by maintaining a slight vacuum in the aging-waste storage tanks. It also removes heat and water vapor and thus serves as one of the principal controls in the operation of the aging-waste tanks. Air ventilation flow rates will vary between approximately 500 and 1,000 scfm for an aging-waste tank (usually 600 scfm). Heat removal rates will vary, but would be less than 4×10^6 Btu/hr, and water boiloff will vary up to 3-6 gal/min. The water vapor (water boiloff) is condensed and the condensate either is routed to the 241-AN-101 Tank for boiloff in the 242-A Evaporator system or is collected in Tank 241-A-417 for recycle back to the aging-waste tank for liquid level control.

6.4.2 Annulus Ventilation System

The annulus of each aging-waste tank is ventilated to maintain dry conditions within the annulus as a corrosion protection measure, to provide supplementary heat removal from the waste tank, and especially to provide early leak detection information. The maximum rated air flow through each of the tank annuli is 3,500 scfm. The anticipated air flow during operations is about 800 scfm. Heat removal will vary with conditions within the tank. At the anticipated air flow rates heat removal will range up to 120,000 Btu/hr.

6.5 PROCESS EFFLUENTS

The process effluents resulting from normal operation of the aging-waste tank facilities are gaseous effluents from the ventilation systems and liquid effluents in the form of cooling water, steam condensate, and process condensate. These effluents are also discussed in Chapter 7.0.

6.5.1 Gaseous

All ventilation exhaust systems are designed, constructed, and maintained to remove radioactive particulate materials from gaseous effluents so that the effluents meet specified concentration guides.[10,11]

6.5.2 Liquids

Cooling water from the condensers in the primary ventilation system will discharge to either the Gable Mountain pond or the B-Plant pond. The maximum discharge rate is approximately 800 gal/min for each condenser.

Steam condensate from the aging-waste tank steam heating coil is routed to the 216-A-8 Crib and will be automatically diverted to 241-A-417 Tank if it becomes contaminated. Maximum flow is approximately 7 gal/min based on a 3×10^6 Btu/hr heat transfer rate.

Steam condensate from the ventilation line heater is discharged to a French drain (normally much less than 1 gal/min).

6.6 DISCUSSION OF CURRENT CRITERIA

Current criteria require that spare tankage having a volume exceeding that of the largest volume of wet liquid in any single tank be maintained.(12) In the event of a leak in an aging-waste tank, the liquid can be transferred from the leaking tank to the spare tank. The spare tank will already have a starting heel of 650,000 gal to provide circulation for the transferred waste. Because the spare tank must be heated gradually by the controlled addition of waste from the leaking tank, some delay will be incurred before a leaking tank can be emptied.

6.7 REFERENCES

1. SD-WM-TI-047, November 1982, Maximum Heat Generation and Isotopic Activity Within an Aging-Waste Tank, C. M. Kronvall, Rockwell Hanford Operations, Richland, Washington.

2. CPS-T-149-00010, Rev. A-0, January 1981, Waste Storage Tanks and Associated Equipment, W. A. Blykert, Rockwell Hanford Operations, Richland, Washington.

3. PFD-T-200-00001, February 1983, Aging-Waste Tank Initial Filling Flowsheet, C. M. Kronvall, Rockwell Hanford Operation, Richland, Washington.

4. ARH-2012, April 1971, Process Specifications and Standards Uranium Plutonium Processing in the PUREX Plant, W. E. Matheison and G. L. Ritter, Atlantic Richfield Hanford Company, Richland, Washington.

5. ARH-CD-256, February 1975, Anticipated Natural Air Breathing Rate for Underground Tanks, J. S. Garfield, Atlantic Richfield Hanford Company, Richland, Washington.

6. ARH-CD-267, March 1975, Maximum Anticipated Hydrogen Concentrations in Underground Tank Atmospheres from Radiolysis of Water, J. S. Garfield, Atlantic Richfield Hanford Company, Richland, Washington.

7. Letter, M. Solbakken to F. L. Olson, December 14, 1977, "Hydrogen Accumulation in Tank Vapor Space."

9212562129

8. Internal Letter, January 22, 1979, "Hydrogen Generation in Isolated Tanks," G. T. Dukelow to R. A. Zinsli, Rockwell Hanford Operations, Richland, Washington.

9. PSD-T-151-00007, Process Specifications, No. 2.1.1, Page 7, February 3, 1982, Rockwell Hanford Operations, Richland, Washington.

10. DOE Order 5480.1A, December 1981, Environmental Protection, Safety, and Health Protection Program for DOE Operations, Chapter XI, "Requirements for Radiation Protection," U.S. Department of Energy, Washington, D.C.

11. RHO-MA-139, June 1981, Environmental Protection Manual, G. F. Boothe and D. L. Uhl, Rockwell Hanford Operations, Richland, Washington.

12. DOE-RL Order 5820.2, July 1979, Radioactive Waste Management, U.S. Department of Energy, Richland Operations, Richland, Washington.

7.0 WASTE MANAGEMENT AND CONFINEMENT

The waste management objectives for the operation of the Aging-Waste Facility are: (1) liquid and airborne effluents shall be managed according to the guidelines of RHO-MA-139[1] and DOE Order 5480.1A[2], (2) radioactive contamination of the waste effluent streams shall be ALARA as required by DOE-RL Order 5820.2.[3], and (3) solid wastes (e.g., failed HEPA filters) shall be managed according to RHO-MA-222.[4]

7.1 NONRADIOACTIVE WASTES

The composition of the neutralized high-level waste stream will be controlled by process specifications. The concentrations of nonradioactive contaminants in the vapor shall be low enough to ensure that their release rates to the atmosphere will be negligible.[1] The potential for solid contaminants impacting the operation of the HEPA filters is reduced by the ability to isolate a failed bank of filters and by the availability of the backup system for the primary (702-A) system.

7.2 RADIOACTIVE WASTES

Airborne, liquid, and some solid wastes are generated during the operation of the Aging-Waste Facility. The airborne effluent streams result from primary and annulus ventilation of the tanks. Primary ventilation is provided by the 702-A Exhaust System which removes moisture from and filters the tank exhaust vapor prior to discharge to the atmosphere. The annulus ventilation system provides a filtered air supply to and a filtered air exhaust from the tank annuli. This filtered air from the annuli is not normally contaminated. It is released to the environment via stacks 296-A-18, 296-A-19 (AY Tank Farm), and 296-A-20 (AZ Tank Farm). A detailed description of these systems is presented in Chapters 5.0 and 6.0. Fission products are the primary radionuclides in the airborne effluents released from the facility during operation.[5] Liquid effluents, if contaminated would also contain fission products. The liquid effluent streams from the facility are cooling water and steam condensate. Liquid resulting from deentrainment of vapor is normally recycled within the system. Process condensate is either recycled or sent to the 241-AN-101 Tank. As such, these two streams are not considered effluents.

Cooling water used in the condensers of the primary ventilation system is discharged to Gable Mountain Pond or B Pond. Steam condensate from the tank's steam heating coil is discharged to the 216-A-8 Crib or diverted to the 241-A-417 Tank. Steam condensate from the ventilation system heating coil is discharged to a French drain. The process condensate which results from the evaporation of the waste in the tanks will initially be routed to either 241-AN-101 Tank or the 241-A-417 Collection Tank. The contents of the A-417 Tank are recycled back to AY or AZ tanks as needed to maintain liquid level. Overflow from the A-417 Tank will drain to the 101-AN-01D Pit.

9 2 1 2 5 6 2 1 2 2 1

7.2.1 Airborne Effluents

A description of the airborne effluent treatment system is provided in Chapter 5. Referring to Figure 5-9, exhaust vapor from the tanks flows via a common header to the first deentrainer (K1-5-1), the surface condensers, and the second deentrainer (K1-5-2A). The deentrained air enters the 702-A Building where it is heated and filtered by double HEPA filters prior to being exhausted to the atmosphere via the 296-A-17 Stack. The maximum flow through this stack is ~4,000 scfm.

The annulus ventilation system for the AY Tank Farm directs pre-filtered air into the annuli, circulates the air in the annuli, and then exhausts the air through double HEPA filters. The flow through Stack 296-A-18 is 4.2×10^8 ft^3/yr; Stack 296-A-19 is 4.2×10^8 ft^3/yr.(6) The AZ Tank Farm annulus system is similar in design to the AY Tank Farm system except that it exhausts both AZ Tanks. Flow through the 296-A-20 Stack is 8.1×10^8 ft^3/yr.(6)

Normal operation of the Aging-Waste Facility is not expected to result in airborne effluents in excess of guidelines in References 2, 3, and 4. Using the source term provided in Chapter 6.0 and Reference 5, the potential concentrations of radionuclides in the gaseous effluents released under normal operation are listed in Table 7-1.

TABLE 7-1. Potential Concentrations of Radionuclides in the Gaseous Effluents from 702-A System Under Normal Operation.[a]

Nuclide	Concentration, $\mu Ci/cm^3$
^{90}Sr	2.5×10^{-17}
^{106}Ru	8.3×10^{-18}
^{137}Cs	2.7×10^{-17}
^{144}Ce	6.0×10^{-17}
All	2.5×10^{-16}

[a]Concentrations are based on the AZ-101 Tank, the first tank to be filled, assuming a ventilation duct decontamination factor (DF) of 10^3; first deentrainer DF of 10^1; second deentrainer DF of 10^2; condenser DF of 10^2; and double HEPA filter DF of 3×10^5. (See Fig. 5-9.)

The moisture removal system (which includes the deentrainers, condensers, and heaters) is designed to prevent condensation from occurring on the HEPA filters and potentially damaging contaminants from reaching the filters. Failure of one or more of the ventilation system treatment components could result in transient releases of radionuclides at concentrations higher than those listed in Table 7-1. Such failures were analyzed to estimate their potential impact on the radionuclide release rate. The failures considered and the estimated resultant releases are listed in Table 7-2.

TABLE 7-2. Potential Releases of Radioactive Material to the Atmosphere Following Failure of 702-A Components (Ci).[a]

Failed component	Duration of component failure			
	1 hr	8 hr	16 hr	24 hr
Single HEPA	2.5×10^{-10}	2×10^{-9}	4×10^{-9}	6×10^{-9}
Double HEPA	5×10^{-7}	4×10^{-6}	8×10^{-6}	1.2×10^{-5}
2nd deentrainer and double HEPA	5×10^{-5}	4×10^{-4}	8×10^{-4}	1.2×10^{-3}

[a]Releases would be similar for the backup system.

Failure of a single HEPA filter reduces the HEPA DF from 3×10^5 to 2×10^3; failure of both HEPA filters reduces the DF to 1. Failure of the first deentrainer increases the second deentrainer DF to 10^3, thus, not seriously impacting the system. (The DF of the second deentrainer is based on the efficiency with which it can remove entrained particles from the fluid in which they are entrained. This efficiency increases when the amount and size of these particles increase. With the failure of only the first deentrainer, more and larger particles would pass through onto the second deentrainer, thus increasing its efficiency.) Failure of the second deentrainer removes that deentrainer's DF from the system, thus reducing overall DF of the system from 3×10^{13} to 3×10^{11}. However, it is postulated that if the second deentrainer fails, a bank of HEPA filters would also fail and eventually reduce the overall DF to 10^6.

In the case of HEPA filter failure, the failed bank of two HEPA filters can be isolated and operations would continue using the five other double HEPA filter banks. Additionally, the backup exhaust system which contains its own heater, one bank of double HEPA filters, exhauster, and stack would be available.

However, if the failure of the HEPA filter or filters is due to failure or malfunction of the second deentrainer, the HEPA filters in the backup system might fail similarly until the deentrainer is repaired. Deentrainer failures are minimized by design and quality control, HEPA filter efficiency is monitored with periodic dioctylphthalate (DOP) checks. Failed HEPA

filters in the primary ventilation system can be isolated. Table 7-3 lists the estimated instantaneous concentrations in gaseous effluents (as they exit the stack) following certain 702-A component failures. These concentrations were calculated from the concentrations expected under normal operating conditions and the reduced DF resulting from the postulated failure.

TABLE 7-3. Potential Instantaneous Concentrations of Radionuclides in Gaseous Effluents Following Failure of 702-A Components.[a]

Failed component	Concentration at point of release, $\mu Ci/cm^3$
Single HEPA	3.6×10^{-14}
Double HEPA	7.4×10^{-11}
2nd deentrainer and double HEPA	7.4×10^{-9}

[a]Releases would be similar for the backup system.

Table 7-4 lists the estimated concentrations (averaged over 168 hours of continuous operation) of fission products in the gaseous effluents released following postulated component failures of specified durations. These 168-hour averages can be compared with the limits specified in Reference 1.

TABLE 7-4. Potential 168-Hour-Average Concentrations in Gaseous Effluents Following Failures of 702-A Components ($\mu Ci/cm^3$).[a]

Failed component	Duration of component failure			
	1 hr	8 hr	16 hr	24 hr
Single HEPA	2.1×10^{-16}	1.7×10^{-15}	3.4×10^{-15}	5.1×10^{-15}
Double HEPA	4.4×10^{-13}	3.5×10^{-12}	7×10^{-12}	1.1×10^{-11}
2nd deentrainer and double HEPA	4.4×10^{-11}	3.5×10^{-10}	7×10^{-10}	1.1×10^{-9}

[a]Releases would be similar for the backup system.

To ensure that the gaseous releases from the 702-A ventilation system do not exceed the limits of DOE-5480.1A, [2] at the site boundary, the following operational control limits apply at the point of release:*

- Annual average concentration shall not exceed the concentration guides in Table I of Reference 1.
- The 168-hour average concentrations shall not exceed four times the concentration guides in Table I of Reference 1.
- The instantaneous concentrations in the gaseous effluents shall not exceed 5,000 times the concentration guides in Table II of Reference 1.

The three postulated failures will not result in exceeding the limits of DOE 5480.1A. However, the two postulated failures involving double HEPA filter failure will result in exceeding the operational control limit of 5,000 times the value of Table II in Reference 1. When this limit is exceeded, RHO-MA-139 specifies notification. The air monitoring equipment includes fast rise rate meter electronics that can sense sharp changes in air concentrations in a fraction of a second.

9 2 1 2 5 6 2 1 2 2 5

7.2.2 Liquid Effluents

A discussion of the liquid effluent treatment system is provided in Chapters 5.0 and 6.0. Referring to Figure 5-9, the liquid wastes which are released to the environment are the steam condensate, and the cooling water discharge. The steam condensate from the in-tank heaters is discharged to 216-A-8 Crib or directed to the 241-A-417 Tank. The cooling water which cycles through the surface condensers is returned to a warm water sump and subsequently discharged to a pond. Steam condensate from the ventilation system steam heater is discharged to a French drain.

The process condensate can either be routed to the 241-AN-101 (double-shell) Tank or to the 241-A-417 Collection Tank within the Aging-Waste Facility. If the process condensate is routed to the AN-101 Tank, it is not an effluent and, therefore, not considered in this chapter. If the stream is routed to the A-417 Tank, it can be pumped back to the aging-waste tanks or it can be pumped to the diversion station and then to other double-shell tanks. If the A-417 Tank capacity is exceeded, the excess will overflow to the 101-AN-01D Pit.

The other liquid effluents are not normally contaminated. Of these, the steam heating condensate is the most likely to become contaminated. If a leak were to develop and waste solution containing 237 Ci/gal were drawn into the coil over a period of 1 hour, up to 9.9×10^5 Ci could be released to the crib. The steam condensate is monitored prior to its release to the

*RHO-MA-139 Section 8.40 Point of Release - The concentrations of radioactive materials in airborn effluents shall be determined at the point of release from the facility. The point of release for this facility is at the main exhauster (296-A-17) or the back-up exhauster (296-P-17).

crib. If excessive radiation is detected, the condensate is automatically diverted to the 241-A-417 Tank and either pumped back to AY-AZ tanks or pumped to a diversion station and diverted to other double-shell tanks. The radiation monitor is located upstream from F-505 diversion valve. The response time of the radiation monitor is such that it will close the diversion valve before any contamination can get past the valve. There is a redundant radiation monitor further down the line at A8 crib sample pit #2 with similar diversion capabilities as at F-505.

Leaks in the ventilation steam heater and leaks in the surface condensers to the cooling water are not expected to result in a release of radioactive liquid effluent. The potential contamination entering these streams would have a maximum concentration of 0.24 Ci/gal.* Another source of potential release of contamination to the soil is failure of the deentrainers due to corrosion. The maximum concentration available to leak to the soil is 0.24 Ci/gal.* However, corrosion of the deentrainers is unlikely.

Other failures in the Aging-Waste Facility that would result in release of contaminated liquid effluents are failures in the waste transfer piping. The maximum expected concentration in these pipes is 5,100 Ci/gal. Design, monitoring, and quality control essentially preclude the occurrence and would minimize the impact of any such failure that did occur.

7.2.3 Solid Effluents

Solid wastes (e.g., failed equipment such as pipes and HEPA filters) are packaged and buried in accordance with RHO-MA-222.[4]

7.3 EVALUATION

7.3.1 Releases and Acceptability

The calculated concentration of radionuclides in the gaseous effluents released under normal operating conditions are well below the concentration guides listed in Table I and Table II of References 1 and 2. The annual occurrence of any of the failures described in Table 7-2, even if it lasted for a 24-hour period, would not result in an annual average concentration at the point of release above Table I and Table II guidelines.[1,2] The calculated instantaneous and average releases (Tables 7-3 and 7-4, respectively) are calculated to be within the applicable RHO-MA-139[1] concentration guides.

*The decrease in temperature as the moisture-ladened airstream leaves the tank would result in a concentration in the condensed liquid significantly lower than the value reported here.

The only normally radioactively contaminated liquid stream is the process condensate. This stream could only be released to the environment in the event of an accident, such as failure of a buried condensate line. The process condensate concentration at the condensers was estimated to be 7×10^{-2} $\mu Ci/cm^3$.

7.3.2 Monitoring and Sampling Systems

The exhaust from the 702-A Primary Ventilation System is equipped with a record sampler and an Eberline AMS-3 continuous air monitor (CAM) in accordance with RHO-MA-139.[1] The CAM sample filter is changed daily. The record sampler filter is changed weekly and sent to the 222-S laboratory for analysis.

The backup exhaust system is equipped with a dry air sampler which pulls a sample of the exhaust stream through a filter. When the backup system is in operation, the sample filter will be changed at the completion of each run period or weekly, whichever comes first. An upgraded sampling system will be installed at the new exhauster.

The annulus ventilation systems (AY and AZ Tank Farms) are equipped with record samplers in accordance with RHO-MA-139.[1] The samples are collected weekly and are sent to the 222-S laboratory for analysis. A CAM unit is installed upstream of the filters for primary tank leak detection purposes.

The tank heating coil discharge (steam condensate) is monitored and automatically diverted to the 241-A-417 Tank if contamination is detected. The monitoring system consists of two sodium iodide detectors and associated equipment, one upstream and one downstream of the diversion valve.

The site surveillance monitoring system at Hanford provides additional environmental surveillance for the Aging-Waste Facility. The Effluent Controls group is responsible for monitoring the gaseous and liquid effluents and the 216-A-8 Crib, and for maintaining records of monthly and annual release rates. Discussion of the operating parameters monitored is provided in Chapter 5.0.

7.3.3 Confinement Assurance

Currently, administrative controls, backup equipment, filter isolation capability, monitoring, quality control, and engineering design provide the primary assurance of confinement. Based on the source term and system design capabilities, confinement in respect to the airborne environment is adequate.

Three other radionuclides, ^{3}H, ^{14}C and ^{129}I, not listed in Table 7-1 could potentially be present in the gaseous effluent from the 702-A Ventilation System. Samples of the effluent will be collected from the 296-A-17 Stack with appropriate sampling systems and analyzed for these three radionuclides to verify that their concentrations are below the appropriate concentration guides in References 1 and 2.[7]

The current inability to predict the exact concentration of radionuclides in the process condensate is not considered a problem. This condensate will be directed to either the 241-A-417 Tank or the 241-AN-101 (double-shell) Tank. The other liquid effluent streams are not normally contaminated; however, should they become contaminated they can be diverted to the 241-A-417 Tank.

7.4 REFERENCES

1. RHO-MA-139, June 1981, Environmental Protection Standards, G. F. Boothe and D. L. Uhl, Rockwell Hanford Operations, Richland, Washington.

2. DOE Order 5480.1A, August 1981, Environmental Protection, Safety, and Health Protection for DOE Operations, Chapter XI, "Requirements for Radiation Protection," U.S. Department of Energy, Washington, D.C.

3. DOE-RL Order 5820.2, July 1979, Radioactive Waste Management, U.S. Department of Energy, Richland Operations, Richland, Washington.

4. RHO-MA-222, June 1982, Hanford Radioactive Solid Waste Packaging, Storage, and Disposal, F. E. Masa, Rockwell Hanford Operations, Richland, Washington.

5. Internal Letter, DRE-72910-82-014, November 17, 1982, "Aging Waste Facility Safety Analysis Report Release Source Terms," D. R. Ellingson to R. C. Stupka and L. H. Rodgers, Rockwell Hanford Operations, Richland, Washington.

6. RHO-HS-SR-81-2 4QGAS, February 16, 1982, Radioactivity in Gaseous Waste Discharged from the Separations Facilities During 1981," R. C. Aldrich, Rockwell Hanford Operations, Richland, Washington.

7. Private Communication, January, 1983, "Radionuclide Source Term and Gaseous Effluent Concentrations," A. T. MacIntyre to D. R. Ellingson, Rockwell Hanford Operations, Richland, Washington.

8.0 RADIATION PROTECTION

8.1 OCCUPATIONAL RADIATION EXPOSURES

8.1.1 Policy

In support of radiation protection, Rockwell management has developed a policy which ensures occupational and population exposures from Rockwell activities will be As Low As Reasonably Achievable (ALARA)[1]. The policy is implemented by an ALARA program and a Tank Farm Facility ALARA Plan which covers all phases of plant activities (plant design, operating techniques and procedures, radiation surveillance and control programs, training, decontamination and decommissioning, and emergency warning and response programs) in accordance with U.S. Department of Energy (DOE) orders.[2,3]

Additional guidance is provided in DOE/EV 1830-T5, "A Guide to Reducing Radiation Exposure to As Low As Reasonably Achievable."[4]

8.1.2 Design

The basic criterion for the Aging-Waste Facility is the safe transfer and storage of high heat producing radioactive waste. Specific criteria were developed according to the codes and standards to ensure the basic criterion was met (see Chapters 4.0, 5.0, and 6.0). The Aging-Waste Facility as it currently exists includes some components that were constructed as long as 25 years ago. Current criteria various components or segments of the Aging-Waste Facility must meet are: Under the ALARA Program, new facility design projects will include adequate protection from direct and scattered radiation and airborne sources to reduce exposure to ALARA.

Methods of radiation protection considered in the facility design follow:

1. Permanent and/or temporary shielding
2. Confinement system design (primary, secondary, and tertiary described in Chapters 4.0, 5.0 and 6.0)
3. Equipment designed to minimize surface contamination and personnel exposure (remote handling)
4. Radiologically controlled areas
5. Fixed or portable monitoring alarm systems
6. Interlock systems
7. Physical barriers

9 2 1 2 5 6 2 1 2 2 9

8. Maintenance design considerations

9. Decontamination systems

10. Criticality Safety Review.

8.1.3 Operational Considerations

Operating Procedures and facility designs that maintained personnel radiation exposures to levels that were below existing standards were reflected in the original facility designs. Current design changes including upgrading of structures, systems, or equipment necessary to reduce radiation exposure to ALARA levels, have been based upon experience gained from years of operating the waste storage tanks at Hanford.

If design changes are necessary or if certain reasonable changes will reduce occupational exposure further, a Change Engineering Order will be issued. These changes can be implemented at any time during the operating period of the Aging-Waste Facility when appropriate.

8.1.3.1 Manuals and Standards. The controlled generation, storage, and processing of highly radioactive wastes at Hanford has continued for well over 35 years. This long experience has facilitated the preparation of detailed, written radiation work procedures and protection standards that comply with applicable guidelines. These include:

- Environmental Protection Manual(5) - The detailed standards for controlling the release of radioactive and nonradioactive materials into the air, water, and soils; the environmental surveillance program; and the effluent sampling and monitoring program.

- Manual of Standard Procedures For Radiation Monitoring(1) - A documented collection of methods, routine practices, controls, exposure guides, supporting data, and other information developed to guide Radiation Monitoring personnel in establishing and maintaining a uniform and sound radiation control program.

- Radiation Work Procedures(6) - The regulations and practices for radiological protection in various phases of work in radiation areas.

- Radiological Controls(7) - The radiation protection standards and controls in effect at Rockwell.

- Health Physics Procedures(8) - Specific procedures followed by Radiological Engineering personnel including those for instrument calibration and supplemental dosimetry.

In addition to the preceding manuals, existing operating procedures are frequently updated and new procedures are prepared when necessary. These procedures, known as either Standard Operating Procedures (SOP) or Plant

9 2 1 2 5 6 2 1 2 3 0

Operating Procedures (POP), are developed to assure that operators can complete all assignments related to the Aging-Waste Facility, such as the collection, containment, storage, and transport of radioactive materials without undue risks of personnel exposure or release of contaminants to the environment. Tank Farm and Evaporator Process Control (TF&EPC) and the Operating Documents Group of the Process Engineering Department of the Research and Engineering Function keep the SOP and POP up to date.

8.1.3.2 Occupational Radiation Exposure Controls. To maintain personnel radiation exposures to levels that are ALARA, Rockwell has adopted radiation control levels that are lower than DOE limits. Rockwell radiation control levels and DOE limits are presented in Table 8-1. Planned radiation exposure of personnel in excess of the Rockwell annual and quarterly control levels can be undertaken only after obtaining written approval from the Manager, Radiological Protection. Radiation exposures above RHO control levels without prior written approval are considered as radiation occurrences and a formal evaluation of the event is necessary. When the exposure status of an employee becomes uncertain or an exposure control level is likely to have been exceeded, that individual is restricted from entering posted radiation areas until the exposures have been determined.

TABLE 8-1. Occupational Radiation Dose Limits and Controls.[a]

Organ	DOE limits,(2) rem		Rockwell control levels, rem		
	Annual	Quarter	Annual	Quarter	Week
Whole body: head and trunk, gonads, lens of eye, red bone marrow, blood-forming organs	5	3	3	1.25	0.3
Skin (except hands and forearms)	15	5	9	3	0.9
Other organs (except bone)	15	5	7.5	-	-
Bone	30	10	15	-	-
Forearms	30	10	15	5	-
Hands	75	25	15	5	1.5[b]
Feet	75	25	15	5	1.5[c]

[a]As measured by: (1) the "unfiltered" chip in the record thermoluminescent dosimeter (TLD); (2) an "unfiltered" supplementary TLD; or (3) timekeeping with open-window cutie pie (CP).

[b]As measured by: (1) finger rings worn with TLD chip oriented toward the source; or (2) an open-window CP and timekeeping.

[c]As measured by a closed-window CP and timekeeping.

9 2 1 2 5 6 2 1 2 3 1

8.2 ONSITE ADMINISTRATIVE CONTROL

Rockwell management has developed a policy to maintain occupational and population radiation exposures from Rockwell-controlled activities to levels that are ALARA. The following elements are incorporated into an ongoing program designed to implement this policy.

- Plant design
- Operating techniques
- Personnel training and certification
- Radiation surveillance and control programs
- Environmental surveillance and control program
- Decontamination and decommissioning program
- Dosimetry and supplemental dosimetry programs
- Respiratory protection equipment (full face mask mechanical respirators and self-contained breathing apparatus).

8.2.1 Physical and Administrative Controls for Radiation Areas

- Radiation Area - an area where an individual could receive a whole-body radiation dose between 1 and 100 mrem in any 1 hour.
- Radiation Area-Surface Contamination - an area in which the surface contamination may exceed 200 dpm/100 cm^2 (20 cpm/100 cm^2) for alpha radiation and 2,000 dpm/100 cm^2 (200 cpm/100 cm^2) for beta-gamma radiation, and where radiation levels meet the criteria of a Radiation Area.
- Radiation Area-Airborne Radioactivity - an area where airborne concentrations of radioactive materials averaged over a normal work week, would exceed 25% of the concentrations specified in Table I of Reference 2.
- High Radiation Area - an area where an individual could receive a whole-body radiation dose in excess of 100 mrem (but less than 5 rem) in any 1 hour.
- Radioactive Material Area - an area or enclosure where radioactive material is present in a form such that no protective clothing is required.
- Restricted Access Area - an area where an individual could receive in excess of 5 rem/hr, hence, an area where special safety precautions are required for entry.

The boundaries of the above radiation areas, if not a permanent wall or fence, shall be clearly indicated by rope or chain. Unattended High Radiation and Restricted Access areas shall have boundaries which limit the entry of personnel, except at a planned entrance which is locked or guarded at all times. Personnel entering Radiation Areas must be accompanied by a Radiation Monitor, unless all entering personnel have been qualified in advance to carry out self-survey and self-monitoring.

Administrative measures for controlling access and stay time for the radiation areas described above include posting and procedures. Radiation areas are marked with signs indicating the radiation conditions stated above. Radiation symbols used on the signs conform with the standards of the American National Standards Institute.(9) Radiation work procedures and operating procedures (in compliance with References 6, 7, and 8) describe in detail the monitoring procedures that must be followed upon entering the area, the radiological conditions of the area, and the protective apparel that must be worn upon entering the area.

Outdoor sites follow the physical and administrative requirements stated above to control access and stay time in radiation areas. The following sites are identified with appropriate postings and barriers:(7)

- Underground radioactive waste storage tanks and diversion boxes
- Burial trenches, cribs, and ponds
- Underground pipelines
- Permanent, stabilized burial plots
- Roads and other paved areas covering radioactive contamination.

The first two items are to have posts and chain or fence. The first three are to have signs that read "Underground Radioactive Material," accompanied by a second sign identifying the facility as a "Tank," "Crib," or "Pipeline." Burial plots are to have concrete marker posts.

8.2.2 Personnel Dosimetry

Two dosimetry programs have been established at Rockwell to monitor personnel exposure: (1) the major program uses thermoluminescent dosimeters (TLD), and (2) the supplementary program entails the use of self-reading pencil dosimeters for gamma radiation.

8.2.3 Portable Survey Instruments

All portable survey instruments except Weyco-type personnel survey meters are maintained and repaired by the central Hanford instrument pool and calibrated by PNL personnel. Exchange and calibration procedures used at PNL are contained in Reference 1. Detectors are calibrated with the

9 2 1 2 5 6 2 1 2 3 3

appropriate type and strength of radiation sources. Electronic packages of the instruments are calibrated with an electronic pulse generator. The frequency of calibration of the instruments is determined by their type and use.

The operation of the area monitors, Weyco survey instruments, and CAM units are checked by Instrument Maintenance using a built-in operability test and are checked monthly with a calibration source by Radiation Monitoring. All alpha monitoring devices can be checked before each use with sources mounted on the instrument. Sources for checking portable, beta-monitoring equipment are located near the entrances and exits of radiation areas.

8.2.4 Radiation Protection Training

All Rockwell new employees are given a radiological orientation. The description of the radiation protection training program is contained in Reference 7.

Radiation workers receive additional training that covers the following:

- The potential sources of radiation associated with work performed by the individual's trade
- The biological risks of radiation
- The reasons for minimizing exposure and the methods an individual may use to reduce his (her) exposure
- The requirements for entry into a posted radiation area
- Radiation limits
- The methods by which contamination is controlled during work with radioactive materials
- The need for consulting Radiation Monitoring personnel when confronted with radiological problems or questions
- The proper way to read commonly used self-reading dosimeters
- The need for accurate exposure records and other radiological safety records.

8.2.5 Control of Airborne Radioactive Materials

Continuous monitoring and sampling for airborne radioactive particulate materials is required in areas where personnel have a high potential for exposure to airborne radioactivity resulting from radiological conditions in

the area or the specific operations being conducted in the area. Radiological Engineering personnel determine the need for continuous air monitoring (CAM). All CAM units must have visual and audible alarms.

Respiratory protection equipment is required in the following circumstances:

- When airborne radioactivity concentrations exceed the limits specified in Table 8-2 or when, in the judgement of Radiation Monitoring, conditions are such that the limits in this table might be exceeded
- When uncontained, loose contamination on surfaces readily accessible to personnel exceeds 2,000 dpm/100 cm^2 alpha or 20,000 dpm/100 cm^2 beta-gamma activity
- During operations on contaminated surfaces which may cause or have been known to cause airborne radioactivity such as grinding, welding and flame-cutting, steam-cleaning, sandblasting, or burning
- When an individual is exposed to airborne radioactivity in concentrations which, if averaged over a normal work week, would exceed 25% of the limits in Table 8-2 integrated exposure of 10 maximum-permissible-concentration-hours (MPC-hours) in a 7-day period
- In any area posted as having airborne radioactive material
- During operations where a potential for generating airborne radioactive material is present.

TABLE 8-2. Concentration Guides for Occupational Exposure to Airborne Radioactive Material

Type of radioactivity	Concentration guide ($\mu Ci/cm^3$ of air)
Alpha emitters	2×10^{-12}
Beta-gamma emitters	1×10^{-9}
Iodine - 129	8×10^{-10}

8.3 OFFSITE ADMINISTRATIVE CONTROL

The Environmental Surveillance and Monitoring Program is designed to determine if the impacts on the environment from Rockwell aging-waste activities are ALARA. The program is separated into three areas: effluent releases, environmental surveillance, and tank farm surveillance. These area are described in detail in Reference 5.

9 2 1 2 5 6 2 1 2 3 5

Effluent releases are monitored by obtaining and analyzing representative gaseous and liquid samples from all effluent streams entering the environment.

Routine environmental surveillances are conducted in the 200 Areas and associated sites and at the 600 Area retired waste disposal site. Monitoring of field activities that may cause impacts to the environment are also conducted. Data are analyzed to determine trends, compliance, environmental impacts, and adequacy of radioactive waste containment systems. Results are issued in a series of regular, special, and topical reports.

Routine evaluations are performed on data generated by the CASS and from operational data sheets supplied by Tank Farm Surveillance and Operations. Data is evaluated to detect releases of radioactive materials from containment failures and to ascertain whether or not discharges originating from Rockwell's waste storage tank and evaporator facilities to the environs meet the specified guidelines.

8.4 RADIATION PROTECTION DESIGN FEATURES

All of the above types of radiation areas will or could exist within the Aging-Waste Facility under certain circumstances. For example a Restricted Access Area would exist at the 241-AX-155 Diversion Box if PUREX NHW were being transferred and the cover blocks were not in place. Buried piping outside of the tank farm radiation area is a Radioactive Material Area. The potential for surface contamination and airborne radioactive material exists within the tank farms, ventilation facilities, and especially when maintenance or repair work is being performed on any internally contaminated equipment or pipe.

Aging-waste tank farms are isolated by chain link fencing and entrance is controlled by means of locked gates. Radioactive gaseous effluents are controlled by ventilation exhaust systems in the tank farms. Air from normally contaminated systems (such as exhausted air from the aging-waste tanks) is filtered and is sampled by continuous air monitoring (CAM) units before being discharged to the atmosphere.

Aging-waste tank farms operations will be performed using remote techniques. The tank farm systems for monitoring gaseous and liquid effluents have been upgraded to the latest standards. Monitoring of airborne radioactivity has been upgraded with the use of new CAM units placed at the points of discharge to atmosphere.

8.4.1 Shielding

Shielding for new facilities has also been designed to reduce radiation intensities to a maximum of 1 mR/hr in controlled areas, and 0.5 mR/hr in uncontrolled areas. Pre-existing facilities in controlled areas have sufficient shielding to reduce exposure rates to 1 mR/hr at contact. Principal shielding elements in the aging-waste tank farm facilities are

steel vessels and piping, concrete shells, concrete structures, and covers including earth fill. Shield thickness is designed to give protection from the radiation source of maximum expected intensity. Distance and portable shielding such as "lead blankets," plywood, and lead sheeting will be used as required to provide additional reductions in dose rates.

8.4.2 Ventilation

The ventilation systems for the underground tanks include the 241-A-702 system which services the primary vessels, the portable backup exhauster which provides backup ventilation, and the systems which service the tank annuli. Each system contains HEPA filters and continuous air sampling and monitoring equipment. An upgraded backup ventilation exhauster has been ordered to replace the portable backup exhauster. For details, see Chapter 5.0.

8.4.3 Instrumentation for Area Radiation and Airborne Radioactivity

Outdoor area radiation monitoring systems are installed in the aging-waste tank farms. Two monitors are provided for the 241-AY Farm and one for 241-AZ Farm. Each system consists of detector assemblies, readout, recorders, local alarms, and central alarms. The monitors are sensitive to and indicate gamma radiation from 0.1 to 10 mR/hr. The monitors are set to alarm at 5 mR/hr above background. The radiation levels detected by each monitor are recorded continuously. Fail-safe alarms are included in each system. Audible and visual alarms are provided at each detector location, and a reset button for the alarms is provided at the readout location. High radiation and instrument failure alarms are annunciated in an always occupied location, at 242-A.

The 296-A-17 Stack sampling and monitoring system contains a three-nozzle probe connected by a very short and direct sample transport line to a "Eberline AMS-3" CAM unit and record sampler. Exhaust air is filtered through a sample filter in the CAM. A Gieger-Muller tube located directly above the sample filter continuously monitors the amount of radioactive material collected on the filter and supplies an input signal to a recorder located in the 241-A-271 instrument building. The record sampler collects a sample on filter paper which is changed weekly and sent to the laboratory for analysis. As a secondary measure a filter in the CAM unit is also analyzed.

8.5 RADIOACTIVE SOURCES AND DOSES

8.5.1 Sources of Airborne Radioactive Material

Radioactive gases and vapors that are generated in the aging-waste storage tanks during normal operating conditions are removed via the 702-A Primary Ventilation System. Concentrations of radioactive materials

9212562123 7

in the gaseous effluents discharged to the atmosphere from the Aging-Waste Facility, shall not result in air concentrations at the site boundary greater than the Concentration Guides in Table II of Reference 2. In addition the concentrations at the point of discharge shall not exceed the concentration guides in Table I.[2] The ventilation system includes sampling and monitoring components.

8.5.2 Contained Radioactive Sources

Contained radioactive sources used in the storage and control of the aging wastes generated by PUREX processing include the transfer piping, diversion boxes, diverter stations, pump pits, and underground waste storage tanks. Concentrations of fission products in the postulated worst case waste leaving PUREX for the 241-AX-155 Diversion Box are listed in Table 8-3.

Maximum fission product concentrations in the first aging-waste tank occur in 1985, after campaign 3C. These concentrations were given in Table 6-2 and are reproduced in Table 8-4.

8.5.3 Estimated Onsite Exposure During Normal Operations

Table 8-5 gives the radiation exposure rates above pump and sluice pits in AY and AZ Tank Farms with cover blocks in place when no inter-tank transfers are taking place, and while aging-waste having the composition given in Table 8-4 is being pumped through an intertank contingency transfer route.

Because the potential exposure rates exceed the original design criteria of 1 mR/hr in AY and AZ Pump and Sluice Pits for the worst case, both with and without transfer occurring (Table 8-5), it will be necessary to control access to the vicinity of these pits and/or to post them with appropriate radiation signs.

The exposure rates over the cover blocks or, in the absence of cover blocks at the edge of the new diversion box, 241-AX-155, while PUREX NHW is being transferred are given in Table 8-6. The contact exposure rate with cover blocks in place is less than the 241-AX-155 design criteria of 0.5 mR/hr.

8.5.4 Estimated Offsite Exposure During Normal Operations

Site location and description are given in detail in Chapter 3. There are no residential sites closer than about 20 km (12 mi) to the aging-waste tank farms and the closest significant population center is the city of Richland, located about 30 km (18 mi) to the southeast.

9 2 1 2 5 6 2 1 2 3 8

TABLE 8-3. Fission Product Concentrations in Worst Case PUREX NHW.[a]

Isotope*	Concentration, Ci/gal
^{89}Sr	250
^{90}Sr	47
^{90}Y	47
^{91}Y	390
^{95}Zr	560
^{95}Nb	1,100
^{103}Ru	120
^{103m}Rh	120
^{106}Ru	160
^{106}Rh	160
^{134}Cs	8
^{137}Cs	53
^{137m}Ba	50
^{141}Ce	87
^{144}Ce	880
^{144}Pr	880
^{147}Pm	170
Total	5,1000

[a]6% ^{240}Pu Fuel, 180-day cooled, with waste concentrated to 190 gal/MTU.

TABLE 8-4. Maximum Fission Product Concentration in First Aging-Waste Tank.[a]

Isotope	Ci/gal
^{89}Sr	14.8
^{90}Sr	7.83
^{91}Y	22.6
^{95}Zr	23.3
^{95}Nb	55.6
$^{103}Ru/Rh$	6.32
$^{106}Ru/Rh$	8.48
^{125}Sb	0.35
^{127}Te	0.21
^{129}Te	0.21
^{134}Cs	0.29
^{137}Cs	8.16
^{144}Ce	67.6
^{147}Pm	21.2
Total	237.

[a]Following campaign 3C.

TABLE 8-5. Radiation Exposure Rates Expected Above Pump and Sluice Pits While Worst Case PUREX NHW is Being Pumped.

Farm	Pit	Cover block thickness, in.	Riser ID, in.	Exposure rate, R/hr		
				Above riser no transfer	Transfer piping	Total during transfer
AY	Pump	30	42	.0015	.0012	.0027
	Sluice	24	42	.0093	.0097	.019
AZ	Sluice	24	42	.0093	.0072	.0165

TABLE 8-6 Radiation Exposure Rates Expected at the 241-AX-155 Diversion Box While Worst Case PUREX NHW is Being Transferred.

Location	Exposure rate, R/hr
Cover blocks in place:	
Contact	4×10^{-4}
3 feet above cover blocks	2×10^{-4}
Cover blocks removed:	
At edge of box	160

There will be no offsite exposures as a result of normal operation of the Aging-Waste Facility. State Highway 240 runs through the Hanford Site and passes within 9 km (5.6 mi) of the 200 East tank farms. The potential for public exposure on this highway is taken into consideration for analyses of hypothetical accidents, but it would not be appropriate nor realistic to use the highway location for the purpose of predicting continuous exposure to the general population. For the purpose of radiation dose calculation, the maximum individual is assumed to reside at Ringold, about 16 km (10 mi) east-southeast of the aging-waste tank farms.

8.6 REFERENCES

1. RHO-MA-145, April 1979, Radiation Monitoring Manual of Standard Procedures, Rockwell Hanford Operations, Richland, Washington.

2. DOE Order 5480.1A, August 1981, Environment Protection, Safety, and Health Protection Program for DOE Operations, Chapter XI, 'Requirements for Radiation Protection,' U.S. Department of Energy, Washington, D.C.

3. DOE Order 5484.1, February 1981, Environmental Protection, Safety, and Health Protection Information Reporting Requirements, U.S. Department of Energy, Washington, D.C.

4. DOE/EV 1830-T5, April 1980, A Guide to Reducing Radiation Exposure to As Low As Reasonably Achievable, U.S. Department of Energy, Washington, D.C.

5. RHO-MA-139, June 1981, Environmental Protection Manual, G. F. Boothe and D. L. Uhl, Rockwell Hanford Operations, Richland, Washington.

6. RHO-MA-172, January 1979, "Radiation Work Procedures," Radiation Protection Department staff, Rockwell Hanford Operations, Richland, Washington.

7. RHO-MA-220 Rev 1, February 1983, Radiological Standards and Operational Controls, Radiological Engineering staff, Rockwell Hanford Operations, Richland, Washington.

8. "Health Physics Procedures", 1982, Rockwell Hanford Operations, Richland, Washington.

9. ANSI-N545-1975, 1975, Performance Testing, and Procedural Specifications for Thermoluminescence Dosimetry: Environmental Applications, American National Standards Institute, New York, New York.

9.0 ACCIDENT SAFETY ANALYSIS

Aging-waste from PUREX operations will be stored in double-shell tanks which have not previously held aging-waste. Tank 101-AZ will be filled first followed by Tank 102-AZ. Tank 102-AY will serve as the spare for 102-AZ. Information used to identify potential hazards and develop subsequent scenarios was obtained during previous storage of aging-waste in single-shell tanks. Where applicable, credit was given to the margin of safety provided by the secondary tank and the annulus ventilation and instrumentation systems of the double-shell tanks.

9.1 HAZARDS

The projected Aging-Waste Facility configuration and systems operation were reviewed to identify potential hazards. The review was conducted systematically, considering first the facility, then the waste piping, the tanks, and the support systems. Consideration was given to individual segments and interfaces with other segments for overall facility safety consistant with limitations stated in Chapter 1. Figure 9-1 identifies the various segments of the aging-waste facility which were reviewed for potential safety hazards and indicates the relationship between the segments. Hazards identified, consequences, and mitigating features are described in Tables 9-1 through 9-4.

9.2 ABNORMAL OCCURRENCES

Events included in this category are those which could result in injury to operating personnel, contamination releases within the boundaries of the facility, or the disruption of normal operations. As a result of an abnormal occurrence, minor amounts of radioactivity may be released to the immediate environs but would pose little or no risk to the offsite population.

9.3 ACCIDENTS

In the context of this SAR, the term accidents refers to credible situations that create demands upon the system beyond its capabilities to control and that may result in significant onsite or offsite impacts. Impacts considered fall into three general categories: personnel, environmental, and economic. Economic impacts are considered in relative terms rather than real (dollar) values, i.e., a compressor relative to a condenser or a condenser relative to a double-shell tank.

Each of the events identified in Tables 9-1 through 9-4 may, with loss of control, generate an abnormal occurrence or an accident; however, equipment and controls, engineered safety systems, and administrative controls can prevent and/or mitigate the impact and effects of each identified hazard.

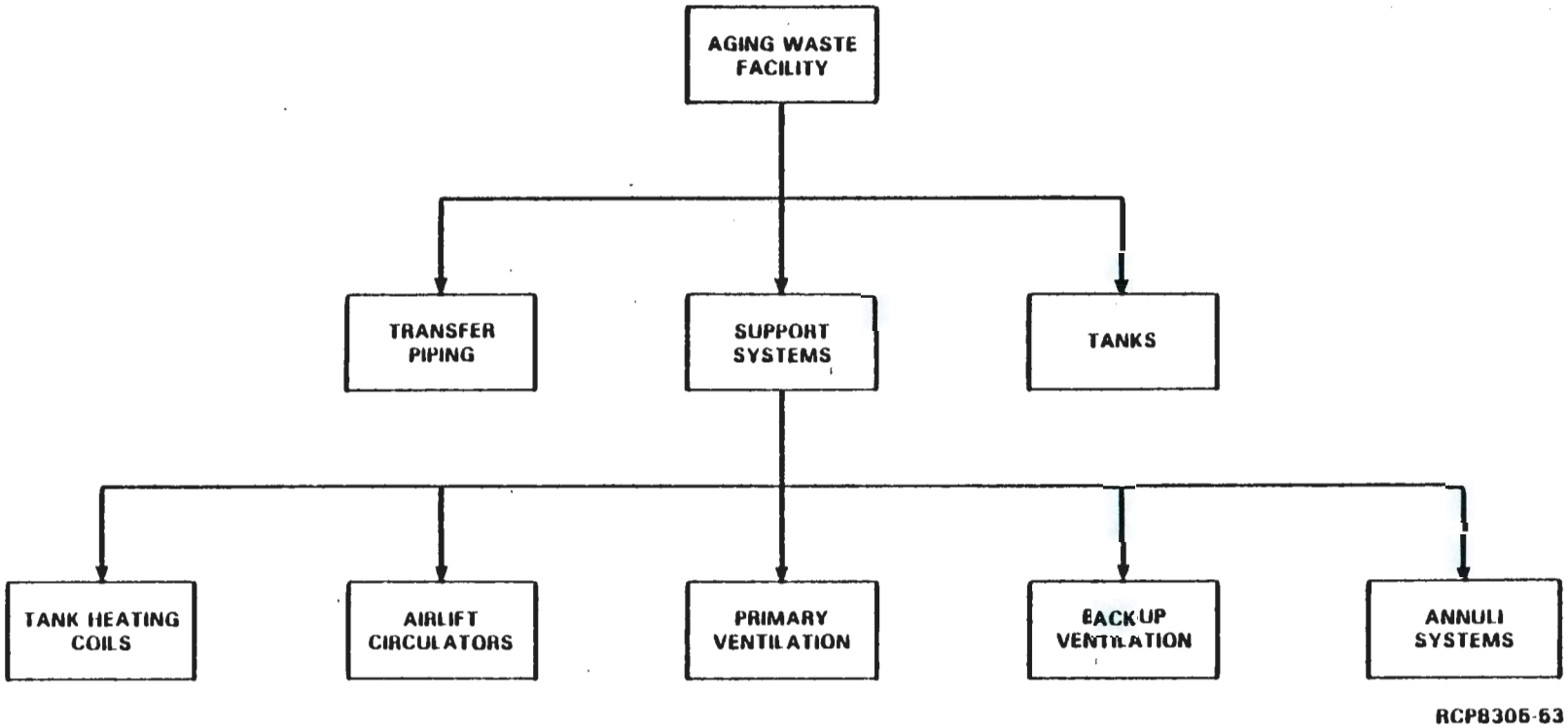

FIGURE 9-1. Relationship of the Segments of the Aging-Waste Facility Reviewed for Potential Hazards.

TABLE 9-1. Aging-Waste Facility Hazards Analysis.

Event	Possible sequence	Source term[a]	Potential consequence(s)	Preventive features	Mitigating measures
Seismic Activity	Earthquake occurs and support utilities disrupted; piping severed.	100 Ci/hr to vapor space	Loss of tank support systems and ventilation containment; loss of continued usage of tanks	Tanks constructed to Safe Shutdown Earthquake (SSE) criteria.	Probability of SSE at Hanford is 7×10^{-4} per year.
High Winds	Support structures and utilities subjected to high winds and associated debris and support utilities disrupted.	100 Ci/hr to vapor space	Loss of tank support systems and of ventilation containment.	Support structures and utilities designed to withstand 85-mph winds.	The peak gust wind measured at Hanford was 80 mph.
Tornado	Above-grade structures and systems subjected to tornadic winds and associated missiles and ventilation filters and compressor lines destroyed and tank vapor spaces evacuated through open ventilation ducting.	50 Ci;[b] 100 Ci/hr to vapor space	Loss of tank ventilation system containment; personnel injury; personnel contamination.	Administrative controls.	This event is considered to be very improbable. Probability of Design Basis Tornado (DBT) at Hanford is 1×10^{-7} per year.
Thunderstorm	Lightning strikes facility and causes a loss of facility electrical power.	100 Ci/hr to vapor space	Loss of tank ventilation system containment; loss of air lift circulators. Long term loss of air lift circulators results in settling of solids, followed eventually, by overheating of tank and then by corrosion stress.	An emergency generator automatically supplies power to operating air compressors.	Following restoration of of power, settled solids can be resuspended in a short time relative to time for overheating to develop. (Ref. 2)

TABLE 9-1. Aging-Waste Facility Hazards Analysis. (Continued)

Event	Possible sequence	Source term[a]	Potential consequence(s)	Preventive features	Mitigating measures
Freezing Weather	Ice forms on power lines, mechanical devices, and outside stairways.	100 Ci/hr to vapor space	Possible disruption of support services; personnel injury associated with falls.	An emergency generator automatically supplies power to selected equipment; hand rails installed on external stairways.	Mild winters; selected equipment protected; emergency procedures for utility failure in winter; sanding of walkways.
Industrial Accident	Personnel injured by falling objects or missiles or injuries related to falls or chemical burns and fume inhalation or back strains from lifting.		Lost work days; possible personnel fatality.	Pre-job planning and scheduling; training; roped pathways; procedures. Area lighting for increased visibility	Trained emergency medical personnel are available at the E-W fire station 24 hours/day.

[a]Source terms from Ref. 1.

[b]Under normal operating conditions and maximum concentration of radionuclides in the tanks, 100 Ci/hr are entering (and leaving) the vapor space. At any instance 50 Ci are present in the vapor space.

TABLE 9-2. Waste Transfer Piping Hazards Analysis. (Sheet 1 of 4)

Event	Possible sequence	Source term	Potential consequence(s)	Preventive features	Mitigating measures
PRIMARY High Radiation Level	Person is standing directly over transfer piping and waste transferred while person is standing there.	20,000 R/hr (Ref. 3)	Occupational radiation exposure.	Earth cover over piping to reduce radiation levels to 0.5 mR/hr based on anticipated nuclide content.	Radiation Monitoring will conduct a survey above piping upon initial waste transfer. Areas will be posted as appropriate before subsequent transfers.
	Person is standing on a pump pit cover block and waste is routed through pit while person is standing there.	160 R/hr (Ref. 3)	Occupational radiation exposure.	Cover block thickness sufficient to reduce radiation levels to 1 mR/hr based on anticipated nuclide content.	Radiation monitoring will conduct a survey of appropriate pit cover blocks. Cover block will be posted or shielded as necessary.
	Jet/pump fails during transfer and jet/pump requires maintenance to complete transfer.	500 R/hr (Ref. 3)	Occupational radiation exposure.	Administrative controls	Radiation monitoring coverage required during maintenance; stay times established; remote equipment available for inspection and maintenance in high dose rate areas; use of temporary shielding to reduce personnel exposure.
Misrouting	Waste is transferred from PUREX through 241-AX-155 diversion station and jumper alignment routes waste to a tank not prepared to receive it.		Thermal stress of tank sufficient to cause tank bottom to bulge and leak; loss of tank usage.	Administrative controls	Verification of liquid level increases in proper tank, relatively small quantity of waste transferred per single batch, 241-AX-155 diversion station can only route flow to an aging waste tank or spare aging waste tank.

9613449.0056

TABLE 9-2. Waste Transfer Piping Hazards Analysis. (Sheet 2 of 4)

Event	Possible sequence	Source term	Potential consequence(s)	Preventive features	Mitigating measures
Pipe Leak	Waste gels within pipe forming a blockage and pipe ruptures during attempts to free blockage and concrete encasement leaks.	5,100 Ci/gal (Ref. 4)	Radioactive material released to soil; loss of primary piping.	Administrative controls	Batch transfers minimize the transfer time waste is contained in the pipe. Pipe and encasement sloped 0.25% toward tank. Maximum compaction of soil around encasement to minimize sagging of encasement and to inhibit leakage infiltration rate. Piping is flushed following each transfer to minimize buildup of waste crystals in pipes.
	Pipe leaks due to thermal stress, corrosion, and overpressurization.	5,100 Ci/gal (Ref. 4)	Radioactive material release to soil; loss of primary piping.	Piping contained by either larger piping or concrete encasement.	Encasement either is monitored by leak detection devices directly or drains to a location which is monitored.
	Waste is transferred from PUREX, Jumper missing in 241-AX-155 Diversion Station. Entire batch of waste release to AX-155.	5,100 Ci/gal 3,200 gal	Radioactive material contaminates diversion station, and is released to air, personnel exposure during cleanup.	Administrative controls	Release limited to batch size. 241-AX-155 drains to 152-AX catch tank with 5,000 gal capacity. Catch tank can be pumped to an aging-waste tank.
	Jumper nozzle seal 241-AX-155 deteriorates due to radiochemical action of NHW and seal leaks.	5,100 Ci/gal 5 Ci (Ref. 4)	Contamination of diversion station; airborne particulate release.	Administrative controls	Drain in diversion station minimizes amount of waste available for release.

TABLE 9-2. Waste Transfer Piping Hazards Analysis. (Sheet 3 of 4)

Event	Possible sequence	Source term	Potential consequence(s)	Preventive features	Mitigating measures
Dropped Cover Block	Cover block is removed for maintenance and lifting bail breaks and cover blocks falls into diversion station pit, shearing piping and cracking pit bottom.		Possible missile hazard causing personnel injury. Damage to piping and equipment requiring major repair effort. Exposure (chemical fumes, radioactive particulates, and ionizing radiation) to personnel during maintenance.	Lifting bales and choker cables periodically inspected/load tested and certified; standard operating procedures require hard hats in areas where cranes are working and only trained persons necessary to perform the work are to be in the immediate area.	Portable exhausters available for use with containment structures (green house) during maintenance. Unfilterable noxious fumes are discharged above working personnel levels and allowed to disperse. Filter systems on exhauster remove filterable fumes and radioactive particulates.
BACKUP	NOTE: The primary, backup, and intertank waste transfer piping share many of the same potential events, sequences, consequences, and preventive/mitigating features. Only cases where a significant difference exists are addressed under the backup and intertank headings.				
Pipe Leak	Old section of piping (No. 4003) is subjected to 100 psig steam and pipe cracks due to thermal stress.	5,100 Ci/gal (Ref. 4)	Loss of backup piping may result in reduction/curtailment of PUREX waste transfers to tank farms; radioactive material released to encasement then, if that also fails, to soil.	Piping contained by either a larger pipe or concrete encasement; jet requires reset after low weight factor has occurred, SOP requires steam supply be shut off at completion of each use.	Backup piping will only be used if primary piping fails. Encasement drains to leak detection pit. Leak detection is available in 241-AX-152 Diversion Station for the old (4003) section of backup piping.
INTERTANK Primary Tank Leak	A primary tank leak occurs requiring waste to be transferred to spare tank and flex jumpers must be installed prior to transfer.	0.5 R/hr (Ref. 5)	Occupational radiation exposure; delay in transfer.	Administrative controls	Radiation monitoring required to survey area prior to maintenance. Assignment of allowable stay times based on survey results. Use of remote equipment for installation of jumpers and use of shielding to reduce dose rates minimize probability of exceeding allowable exposure levels.

9613449.0057

TABLE 9-2. Waste Transfer Piping Hazards Analysis. (Sheet 4 of 4)

Event	Possible sequence	Source term	Potential consequence(s)	Preventive features	Mitigating measures
Piping Leak	An intertank transfer is made and liquid waste thermally stresses carbon steel piping causing a leak.	240 Ci/gal (Ref. 6)	Loss of intertank transfer capability; radioactive material is released to pipe encasement then, if that also fails, to soil.	Encasement contains radioactive liquid.	Encasement is periodically checked for contamination. Leak detection pits have alarms to signal when a leak is detected. Pipe is subsequently leak tested and repaired or abandoned.

TABLE 9-3. Aging-Waste Storage Tanks Hazards Analysis. (Sheet 1 of 3)

Event	Possible sequence	Source term	Potential consequence(s)	Preventive features	Mitigating measures
Nuclear Criticality	Tank F-16 jet (PUREX) is left on and plutonium solution is transferred to tank F-16 and when sufficient solution enters the tank to overcome low weight factor cutoff, solution is transferred to waste tank and a critical mass accumulates.	Fission products and gasses	Environmental release; personnel radiation exposure; possible loss of continued tank usage.	Jet requires reset after low weight factor cutoff has occurred. SOP requires steam supply to be shut off at completion of each use. Quantity of fissionable material and area over which it would precipitate makes the event incredible.	Batch transfer would be highly diluted by contents of tank. Circulators minimize material settle-out thereby creating an unfavorable environment for accumulation of a critical mass. This event is considered to be incredible.
Acid Transferred to Aging-Waste Tank	Tank F-16 jet is left on and nitric acid is transferred to tank F-16 and sufficient solution enters tank to overcome low weight factor cutoff and acid is transferred to waste tank.		Possible loss of continued tank usage; increase solids loading. Acid attacks tank ventilation equipment.	Jet requires reset after low weight factor cutoff has occured. SOP requires steam supply to be shut off at completion of each use.	Batch transfer would be by contents of tank. Tank contents maintained at a pH of 14. Tank contents are constantly agitated, acid diluted in ventilation equipment.

9613449.0058

TABLE 9-3. Aging-Waste Storage Tanks Hazards Analysis. (Sheet 2 of 3)

Event	Possible sequence	Source term	Potential consequence(s)	Preventive features	Mitigating measures
Fire	Same sequence as "Acid Transferred to Aging-Waste Tank" except organic material is transferred to waste tanks and an electrical spark or short ignites the fumes and air lift circulators and ventilation are shut off to extinguish the fire.	100 Ci/hr (Ref. 1)	Environmental release; possible loss of tank use.	Jet requires reset after low weight factor cutoff has occurred. SOP requires steam supply to be shut off at completion of each use. Air lift circulators would tend to minimize the formation of a separate organic phase reducing the fumes given off by solution. Ventilation would remove any fumes generated. No sources for electric spark in tank. No "separable" organic is normally present in PUREX NHW.	This event is considered to be incredible.
Hydrogen Explosion and Dome Collapse	Pits (sluice and pump) are seal taped to reduce in-leakage and maximize dp between tank and atmosphere. This creates a stagnant area in the pits and radiolytic hydrogen builds up in the pit air space above 4 vol% and a spark (electrical or mechanical) occurs in the pit igniting the hydrogen and the resulting explosion causes a portion of the dome to collapse.	60 Ci 240 Ci/gal 100 Ci/hr (Ref. 1 & 6)	Loss of tank containment; environmental release; personnel exposure and/or injury.	Taping of pits does not prevent in-leakage but restricts it; in-leakage to the pits will purge pits of hydrogen.	Tank farms are not normally occupied, reducing likelihood of personnel injury; hydrogen accumulation rate of NHW is 1.2 cm^3/Whr and requiring 2 days without ventilation to accumulate an explosive concentration within a pit. If ventilation is lost, the steam generated by the waste would have a scrubbing action, thereby removing hydrogen from the pits and dome. This event is considered incredible.

TABLE 9-3. Aging-Waste Storage Tanks Hazards Analysis. (Sheet 3 of 3)

Event	Possible sequence	Source term	Potential consequence(s)	Preventive features	Mitigating measures
Bumping	Heavy particles containing high heat generation rates settle out of waste solution and become insulated by other particles causing the heat to build up in bottom layer and cause a sudden and rapid boiling of liquid waste solution in a localized area.	900,000 Ci[a]	Environmental release; mechanical and thermal stress to tank structure; loss of containment.	Air lift circulators will minimize particle settleout, heat stratification, and assist in heat dissipation.[b] Sluicing can be used to minimize pile-up. Temperature monitoring will provide warning of increasing temperatures in time to take action before overheating leads to bump.	In the past, increasing air flow to circulators, adding dilution water, and transferring tank contents have been partially successful in reducing high temperature in sludge.

[a]Calculated using Reference 1 and 241-SX operational data dated July 21, 1955, to O. F. Beaulieu, Unit Head, REDOX Process Engineering from G. L. Hanson, Process Engineer.

[b]This event is postulated w/o regard to failure of air lift circulators and therefore has a very low probability of occurence. Air lift circulator failure is addressed in Table 9-4.

TABLE 9-4. Support Systems Hazards Analysis. (Sheet 1 of 7)

Event	Possible sequence	Source term	Potential consequence(s)	Preventive features	Mitigating measures
HEATING TANK COILS					
Internal Coil Contamination	Corrosion of coil results in a leak and steam passing across leak acts as a jet drawing waste solution into the coil and steam condensate and waste solution are discharged to the crib.	240 Ci/gal (in-leakage not resultant concentration) (Ref. 6)	Release of radioactive liquid in excess of Rockwell limits.	Coils will be used only to maintain a constant liquid level as NHW is received from PUREX. The coils will then be placed in standby with a positive static air pressure of 35 psig maintained.	Steam condensate discharge stream is monitored by a radiation detector. If radiation is detected, the stream is automatically diverted to to the A-417 Tank.
Live Steam	During initial coil startup, steam is supplied to coil supply line by a manually operated valve and the resulting water hammer causes steam line to rupture.		Personnel injury if rupture occurs near the valve; loss of steam heating coil if rupture occurs within the tank.	Pressure relief valve which vents in direction away from personnel.	SOP requires supply valve to be opened slowly allowing the line/coil to warm up slowly, thereby minimizing water hammer.
AIR LIFT CIRCULATORS					
Loss of Air Supply	Air supply to the air lift circulators is lost due to electrical or mechanical failure and particle settling occurs, thermally stressing the tank bottom	240 Ci/gal (Ref. 6)	Loss of tank containment; loss of tank usage; environmental release.	Two air compressors are required for complete air supply needs - four air compressors are available; emergency electrical power to two of the four compressors is automatically supplied by a diesel generator located within the facility when normal power is lost. A mobile diesel air compressor can	Studies indicate that particle settle-out will not become a major problem until 16 to 20 hours after air is lost.

TABLE 9-4. Support Systems Hazards Analysis. (Sheet 2 of 7).

Event	Possible sequence	Source term	Potential consequence(s)	Preventive features	Mitigating measures
Loss of Air Supply (cont'd)	and primary tank leakage occurs and particle settle-out in the secondary tank occurs, thermally stressing the secondary tank and secondary tank leakage occurs.			be connected (at the compressor building) to provide air for the air lift circulators.	
Explosion	Combustible fumes (solvent, gas, diesel, etc.) are drawn into air compressor and explosion occurs.		Loss of equipment; loss of air supply; potential personnel injury.	Design pressure of air compressor is below diesel fume ignition pressure; air compressor intakes are externally located.	Outside air movement will dilute any combustible vapors.
Explosion/ Fire	Fumes from solvents and cleaning fluids accumulate within the 701-A Compressor Building and a spark (electrical or mechanical) or cigarette ignites the fumes resulting in an explosion and/or fire.		Personnel injury; equipment loss; loss of air to air lift circulators.	Electrical wiring installed according to codes and standards; compressor building is posted as a flammable material storage area. No smoking or open flame allowed.	Overhead sprinklers are installed in the compressor building.
Excessive Air Supply	Air supply valve is opened too widely supplying more air to tank than ventilation system can remove and	2 Ci/hr[a]	Loss of tank containment. Release of radioactive material to atmosphere.	Each air lift circulator has a separate valve and rotameter. All would have to stick open simultaneous for air in excess of ventilation capability to be supplied to tank. Ventilation	A tank low negative pressure alarm occurs when pressure reaches 0.25-in. water gauge vacuum. (Tank vacuum is normally between 0.5 and 1.0 in. water gauge.) Event is considered incredible.

TABLE 9-4. Support Systems Hazards Analysis. (Sheet 3 of 7)

Event	Possible sequence	Source term	Potential consequence(s)	Preventive features	Mitigating measures
Excessive Air Supply (cont'd)	excess air released to atmosphere through pump pit/sluice pit cover blocks.			system is capable of handling the 440 cfm expected if all circulators are wide open.	
PRIMARY VENTILATION					
Ducting Failure	Below grade ducting corrodes, welds crack, etc. and process condensate leaks to the soil.	0.02 Ci/gal[a]	Radioactive material released to soil.	New ducting installed to replace old sections which contained leaking dresser couplings; cathodic corrosion protection is to be provided; welds are tested nondestructively and inspected.	Maximum soil compaction minimizes sags in ducting. Ducting is sloped to enhance drainage toward the first de-entrainer or seal loops.
Ducting Isolation Valve Opened or Failed	"A" tank farm ventilation ducting isolation valve is opened or the valve fails allowing five additional tanks to be ventilated and there is no means of balancing ventilation flow causing AY/AZ tanks to receive insufficient exhaust ventilation.	2×10^{-3} Ci/hr[a]	Loss of tank ventilation containment.	Valve will be administratively controlled in the closed position. Seal loops in the "A" tank farm vent header can be filled to isolate the "A" tanks.	A low vacuum alarm in AY/AZ tanks occurs at 0.25-in. water gauge vacuum warning personnel in the control room of an impending loss of containment.
K1-5-1 De-entrainer Drain Plugged	Drain becomes plugged by foreign objects, corrosion products, crystal growth, etc. and steam condensate accumulates in de-entrainer and forms a seal loop shutting off ventilation to tanks.	100 Ci/hr (Ref. 1)	Thermal stress to the tank containment; shutdown of PUREX waste transfers to AY/AZ tank farms until ventilation can be restored; maintenance personnel radiation exposure.	Quality control inspection for foreign objects during duct construction.	De-entrainer is constructed mostly of stainless steel which limits presence of corrosion products. Condensate is water at pH of 6 to 8 which makes crystal growth unlikely.

TABLE 9-4. Support Systems Hazards Analysis. (Sheet 4 of 7)

Event	Possible sequence	Source term	Potential consequence(s)	Preventive features	Mitigating measures
K1-5-1 De-entrainer Corrosion	De-entrainer shell corrodes causing a loss of de-entrainer integrity.	2×10^{-5} Ci/gal[a]	Radioactive material released.	Differential pressure alarm provided. Stainless steel construction.	Corrosion is minimized by the use of mostly stainless steel construction and high purity water.
Condensers - Loss of Shell Integrity	Thermal shock or corrosion causes a leak to develop in the shell side of condenser and floor drains become plugged.	2×10^{-5} Ci/gal[a]	Loss of equipment; maintenance personnel receive radiation exposure; environmental release.	Slow heating of tank contents will prevent thermal shock to condensers. Raw water treated to reduce corrosion potential.	Three condensers available. If a leak develops, the condenser could be isolated and other condensers would supply adequate steam/moisture removal. Negative pressure within condenser would minimize out-leakage. Condensate leakage would be contained within condenser cell with minimal releases occurring through evaporation.
Condensers - Loss of Cooling Water	Main cooling water supply fails due to booster pump failure, line rupture, etc. and steam is not condensed and surface condenser heats up.	100 Ci/hr (Ref. 1)	Thermal stress ruptures condenser; cooling water becomes contaminated and is released to pond.	Raw water supply low pressure alarms at <30 psig, metal mass of condenser prevents rapid heat up, condenser design temperature is 212°F.	Thermocouples and pressure sensing instruments are set to alarm before damage occurs. Emergency cooling water from spare raw water pumps or from well pumps can be supplied to the condensers to prevent prolonged loss of cooling water.
Condensers - Emergency Cooling System Contaminated	Cooling coil develops a leak and the leak acts as a jet drawing contaminated process steam/condensate into cooling coil.	2×10^{-5} Ci/hr[a]	Environmental release; equipment contamination; personnel radiation exposure.	Cooling coil is constructed of uniform diameter pipe preventing an expansion chamber and increased discharge path, i.e., a jet, from forming except as a result of specific damage causing a constriction and leak downstream of the constriction. Event is considered incredible.	If a jet should form, the internal condenser vacuum would have to be overcome before material could be drawn into coil.

9613449.0061

TABLE 9-4. Support Systems Hazards Analysis. (Sheet 5 of 7)

Event	Possible sequence	Source term	Potential consequence(s)	Preventive features	Mitigating measures
K1-5-2A De-entrainer Corrosion	Wire mesh corrodes allowing moisture to pass through the de-entrainer and HEPA filters become moisture ladened.	5×10^{-5} Ci/hr[a]	HEPA filter failure followed by airborne particulate release.	K1-5-2A is a new de-entrainer with a 20-year design life. Mesh is stainless steel which is unlikely to be corroded by contents of exhaust stream.	HEPA filter will remove water droplets and reduce releases to the atmosphere before it fails. Moisture in air will be at pH of 6 to 8 with low corrosion rate.
K1-5-2A De-entrainer - Radioactive Particle Accumulation	Moisture in exhaust impinges on the wire mesh and radioactive particles in the moisture are trapped in the wire mesh causing radiation levels to rise.	0.1 rad/hr[a]	Occupational radiation exposure.	On-line flush system is incorporated in design so de-entrainer can be back flushed without shutting ventilation down.	Personnel are not normally in the immediate area. Radiation Monitoring periodically surveys the area to determine radiation levels and posts requirements. Earth shielding is provided. Particles drop out in duct, primary de-entrainer and condenser ahead of K1-5-2A de-entrainer.
Steam Heater - Loss of Steam	Supply steam to steam heater fails and moisture-saturated air is supplied to HEPA filters causing excessive moisture loading.	5×10^{-7} Ci/hr[a]	Filter failure; environmental release.	Backup exhauster with an electric heater is available for use while primary exhaust heater is repaired.	All banks of filters would be affected causing a slow decrease in system vacuum. Alarms on gas temperature and tank vacuum warn of the potential problem.
Steam Heater - Steam Leak	Steam leak occurs inside 702 Building upstream of heater and personnel are in the building in the area of the steam leak changing building CAM filter.		Personnel injury; loss of steam; loss of electronic equipment.	Steam piping is schedule 40 which precludes catastrophic failure. Leaks will be small and easily repaired.	Personnel are not normally in the building for long periods of time.

TABLE 9-4. Support Systems Hazards Analysis. (Sheet 6 of 7)

Event	Possible sequence	Source term	Potential consequence(s)	Preventive features	Mitigating measures
HEPA Filter Failure	A high dp develops due to plugging, causing filters to fail or chemicals in the air stream attack the bonding, creating a leak around the filters.	5×10^{-7} Ci/hr[a]	Environmental release.	Six parallel banks of double HEPA filters are used to filter the exhaust stream. It is unlikely that all would fail at the same time; pressure gauges around filters would indicate pressure buildup allowing filters to be isolated and changed before failure occurs. Chemicals that would attack the filter bonding are not used in the Aging-Waste facility.	Sampling and monitoring of the stack exhaust would indicate a leak had developed. Pressure gauges/ DOP checks would indicate which filter had failed allowing that bank of filters to be isolated and changed minimizing releases.
HEPA Filter Radioactive Particle Accumulation	Radionuclides build up on filter media and a high radiation level develops.	0.1 rad/hr[a]	Occupational radiation exposure.	Filters changed frequently based on high pressure drop and/or radiation levels.	Radiation Monitoring surveys area. Areas that exceed 0.1 rad/hr are posted as High Radiation areas. (Ref. 7)
HEPA Filter Changeout	Filters develop high dp, excessive radiation levels, etc. and filter containment during changeout is not maintained.	4 Ci 0.1 rad/hr[a]	Internal occupational radiation exposure; environmental release.	702 Building is used as containment; personnel required to wear approved respiratory protection and clothing during filter changeout.	Portable air monitor in the immediate area is used to determine concentrations and inventories available for inhalation/release. In the past, levels have not been detectable.
Fan Motor Failure	A bearing seizes causing fan stoppage or electrical power to motor is lost.	100 Ci/hr (Ref. 1)	Loss of tank containment; equipment loss.	Redundant fan will automatically start when failure of operating fan occurs.	Backup exhauster is available if both fans are inoperative.
Fan Fire	An electrical short in operating motor ignites lubricants in both motors causing both motor windings to short out.	100 Ci/hr (Ref. 1)	Loss of tank containment; equipment loss.	Motors are grounded to minimize electrical arcing. Grease lubricants do not catch fire readily.	Backup exhauster is available. Fire is unlikely to spread because of a lack of additional combustible material and overhead sprinklers.

TABLE 9-4. Support Systems Hazards Analysis. (Sheet 7 of 7)

Event	Possible sequence	Source term[a]	Potential consequence(s)	Preventive features	Mitigating measures
BACKUP VENTILATION					
	NOTE: The primary, backup, and annuli ventilation systems share many of the same potential events, sequences, consequences, and preventative/mitigating features. Only cases where a significant difference exists are addressed under the backup and annuli ventilation system headings.				
Freezing Weather	Backup exhauster previously operated is shut down and moisture on filter freezes blocking the filter and the blockage is not found until backup exhauster is needed.	100 Ci/hr (Ref. 1)	Loss of tank containment; temporary loss of backup system.	System preheater maintains temperature of air passing through filters above the dew point, minimizing moisture buildup.	Backup exhauster will only be used if primary ventilation fails and cannot be restarted immediately.
ANNULI SYSTEM					
Ventilation-Primary Tank Leak	A large primary tank leak occurs filling the annulus with high heat-generating waste and moisture from waste plugs HEPA filters.	100 Ci/hr (Ref. 1)	Secondary tank failure from thermal stress; bumping; loss of containment.	Low probability of a large primary tank leak. Annulus pump available in AZ-155 pit. Waste can be recycled to primary tank to reduce thermal stress.	Annulus radiation monitor and liquid level monitors will alarm upon sensing loss of primary tank containment. Annuli can be vented to primary tank.
Pump - Primary Tank Leak	Liquid waste from tank leak enters the annuli and secondary tank leak while waiting for tank space in the spare tank.	240 Ci/hr (Ref. 6)	Delay in transfer; increased volume exceeds spare tank capacity; radioactive material release to soil.	The steam coil in the tank can evaporate the 30% waste volume increase in 34 days.	Spare aging-waste tank space is maintained at all times. It will contain the normal volume from the leaking tank. Excess liquid could be held in leaking tank where secondary tank prevents leak to soil until another spare tank can be readied.

[a]Source terms from Chapter 7.0.

The hazards identified were compared to each other, on the basis of source terms and consequences, to determine the "worst-case" accidents. Utilizing this method, four hazards were identified for further investigation:

- Pipe leak between PUREX and the AZ Tank Farm
- Hydrogen explosion within the tank and subsequent dome collapse
- Tank bump
- Major tank leak.

9.3.1 Pipe Leak

An evaluation was performed of the potential impact of a postulated leak in piping containing PUREX NHW with the worst case concentration of fission products (Table 6-1). Several factors are in place which (1) reduce the probability of a leak occurring, (2) reduce the impact of a leak on the environment and on maintenance personnel, and (3) reduce the economic impact of a leak on PUREX operations.

The first category includes the following factors:

- Most of the piping is relatively new and free of corrosion.
- Newly installed or repaired piping was hydrostatically tested after installation.
- Periodic flushing will reduce the buildup of and potential blockage of the system.

The second category, reduction of impact on the environment and personnel includes the following:

- Periodic flushing will reduce buildup of contamination and reduce radiation dose rates from the system.
- Leak detection capability and batch operation of the system will both act to reduce the volume of leakage.
- Encasement of transfer piping, slope of the lines and trenches, and heavy compaction of soil in trenches will help drain any leakage towards the tank farms and reduce radiation dose rates and contamination of soil before and during repairs.
- Administrative controls will minimize radiation exposure of personnel and contamination of the environment, by means of a carefully executed work plan, protective clothing, and shielding.[7]

The third category, economic impact on PUREX operation and cost of repair and recovery from a pipe leak are mitigated by the following factors:

- The factors listed above that reduce the impact on the environment and personnel radiation exposure, also reduce the cleanup effort and hence the cost of repair and recovery following the pipe leaks.

- The availability of a backup waste transfer system will permit the early resumption of PUREX operations following a pipe leak.

After considering the ways that the above factors mitigate the impact of a pipe leak, it was concluded that this accident did not warrant the development of a detailed scenario and impact analysis. A pipe leak is no longer considered a worst case accident.

9.3.2 Hydrogen Explosion and Dome Collapse

A hypothetical hydrogen explosion within a tank and subsequent dome collapse was evaluated to determine if this accident warranted development of a detailed scenario and analysis. The evaluation revealed three factors pertinent to the accident: radiolytic hydrogen generation rate, diffusivity of hydrogen, and steam generation rate.

Steam and hydrogen generated in the tank migrate to the void space in the tank dome and are normally removed from there by the primary ventilation system. However, if forced ventilation were lost, sufficient hydrogen might accumulate in the void space to create an explosive mixture. Both the hydrogen and steam generation rates depend on the radioactivity of the waste. Using values for hydrogen generation and the maximum thermal load in the tank listed in Chapter 6.0, the hydrogen generation rate was estimated to be $\sim 1.4 \times 10^3$ L/hr and the steam generation rate to be $\sim 2.3 \times 10^6$ L/hr. In the system which operates at near atmospheric conditions, the steam generated would be sufficient to purge the hydrogen from the void space long before an explosive mixture could be generated.

The potential problem of localized pockets of hydrogen accumulating in "stagnant" areas, such as risers or pump pits was also examined. However, such an accumulation appears extremely unlikely because of the high diffusivity of hydrogen. The diffusion of hydrogen is enhanced by convection currents (in the absence of forced ventilation) caused by differences between the waste temperatures and the dome void temperatures. In addition, the pits are not sealed and offgas from the void space would escape to the environment in the event of a loss of primary ventilation.

As a result of this evaluation, it was concluded that a hydrogen explosion with resultant dome collapse was not a credible event warranting detailed analysis.

9.3.3 Tank Bump

"Bumping" is the sudden release of latent heat energy which had been contained in the radioactive liquid waste. The mechanisms that have led to "bumping" in the past are not completely understood. Mechanisms postulated to account for the development of the very high temperatures necessary for bumping, are described below.

Under normal operations, the major heat removal mechanism is convection to the liquid not conduction.[8] The settled solids dissipate most of their heat by convection, as long as there is movement of the liquid/solids system. If the airlift circulators were to fail, a sufficient layer of solids might settle out at the bottom of the tank to cause overheating and drying of the solids. Steam vapor pockets would be created in the solids as the interstitial liquid is driven out. The thermal conductivity would drop dramatically because of the loss of movement of solids and liquids, and because of the lower thermal conductivity of the vapor that has displaced the liquid. The heat is now transferred by vapor/solids conductivity without convection. The low heat removal leads to more overheating and expands the dry zone. The whole process irreversibly forms a pocket of high temperature dry solids and vapor under the liquid.[8]

If an overheated, vapor-locked pocket is broken up by buoyancy or by mixing, then there will be a sudden release of steam as the excessively hot solids are cooled by the incoming boiling liquid. That surge can further disrupt other pockets, and the tank can "bump" with a sudden release of most of the trapped heat in the form of steam. That steam surge can exceed the capacity of the vent system to carry off and condense the vapor.[8] In addition to large releases of contaminated steam under the above scenario, releases have occurred during "turnover" in some overheated tanks. Turnover occurs in any tank heated from the bottom. A temperature gradient builds up with higher temperatures and lower density fluid at the bottom. The lower density fluid rises (thermosiphon effect), and releases any superheat relative to the atmospheric pressure in the form of a surge of boiling. The surge of boiling drastically lowers the effective density at that point and causes the fluid to move much more rapidly, drawing more of the superheated fluid from the bottom causing a fountain of steam and fluid, and finally, a sudden surge of contaminated steam.

Some turnover is normal in boiling liquids, but as long as the airlift circulators are operating properly the stratification of the liquid will be minimized. If the circulators were to fail for a sufficient length of time, and then suddenly restarted after stratification has developed, an unmanaged turnover of the liquid could occur leading to a bump.

A steady-state release of energy without any surges is preferred. The inclusion of extra air lift circulators and stricter operating limits than observed in the past should prevent or minimize bumping in the aging-waste tanks. Continuous operation of the air lift circulators maintains nearly all of the solids in suspension, assists in heat dissipation, and minimizes thermal differences in the liquid waste suspension. Multiple air lift circulator failures in excess of 15 hours could permit significant solids settling which may lead to bumping.

A severe bump can jar the tank structure, although it is doubtful that the tank could be shaken with enough force to damage it. The tanks are designed to withstand a 0.25 g seismic event. The maximum internal tank pressure observed during a bump (single-shell tank) was 45 in. water gauge, accompanied by a 20-fold increase in the liquid content of the air space as measured by the effluent discharge of the ventilation vapor condensers. The pressure and effluent increase were observed in an SX tank in July 1955, when the airlift circulators became inoperative for 14 hours. The air flow in the circulators was rapidly reestablished leading to an unanticipated turnover of the tank contents. The duration of the resultant bump was approximately 70 minutes, with a heat evolution of approximately 4,700,000 Btu/hr. The radionuclide content of the gaseous effluent was not determined but, for purposes of this analysis, will be assumed to be of the same concentration as the waste in the tank.

Numerous events have been identified which could cause the airlift circulators to fail and thereby allow the tank to bump. One probable event is a rupture of the main process air line. The probability of a pipe rupture ranges from 3×10^{-7} to 3×10^{-4} per year for new piping.(9) After consideration of the age of the piping and the amount of ongoing construction (isolation projects), the probability of the rupture of a process air line was increased to 1×10^{-3} per year, for conservatism. The other necessary factors (hydrostatic head and heat content) are assumed to be present so that if the failure occurs, the tank would bump according to the following postulated scenario.

9.3.3.1 Bumping Scenario. A rupture of the main process air line occurs either as a result of a construction accident or corrosion and because air to airlift circulators is lost. One or more pairs of check valves in the 22 individual airlift circulator lines fails to close. Waste in the tank, backsurges through the air line and accumulates in the air header. Low process air pressure and radiation alarms warn operating personnel that a problem has developed but, before corrective action can be taken, waste has filled the air header to the location of the rupture.

Recovery actions, complicated by the radiation levels, take in excess of 24 hours(10), during which time the airlift circulators are inoperative. The moderately high localized thermal energy content (lack of self-boiling and mixing) of the waste, the high hydrostatic head (liquid level), and the inoperative airlift circulators allow the waste to become heat stratified. Particles settle out, adding to the heat stratification. The scenario described earlier under 9.3.3 develops. The temperature differential between the liquid and the solid phases continues to increase until a tank bump occurs.

The pressure surge of 45 in. water gauge ejects 800 gallons of liquid into the air space of the tank. The majority impacts the dome or walls, or condenses in a pit and drains back into the tank. It is conservatively assumed that five percent (40 gallons) of the liquid is lost from the tank, either through the ventilation system (32 gallons) or through openings connecting the tank to the atmosphere (8 gallons). Ninety percent of the liquid ejected to the atmosphere (36 gallons containing 8,500 Ci) is in

9 2 1 1 2 5 6 2 1 2 6 4

the form of large droplets and falls out within the fenced confines of the tank farm. The remainder of the liquid ejected to the atmosphere (4 gallons containing 950 curies) is in the form of a fine mist.

9.3.3.2 Analysis. This accident would have potential impact in all of the general impact categories. The environmental impact would be the result of surface area contamination within and beyond the fenced confines of the facility. The economic impacts would be those resulting from cleanup, posting, and administratively controlling the contaminated area. However, it is postulated that the major impact of this accident would be to personnel.

Projected onsite populations, based on current staffing levels and approximate distances from Tank 102-AZ are listed in Table 9-5.

TABLE 9-5. Projected Onsite Population in the Vicinity of 241-AZ-102 Tank.

Location	Personnel	Distance, m	Direction
241-A-271 (day shift only)	1 - 5	100 - 300[a]	S
242-A & 272-AW	107	400 - 500	S to SSW
202-A (PUREX)	345	800 - 900	SSW
2704-C	38	1000 - 1100	W

[a]Depending on time of day and activities being performed, the individual in closest proximity to the accident could be located anywhere from 0 to 400 meters from the point of release.

Estimated offsite population distributions within a 50-mile radius of the 200 Area Hanford Meteorological Tower, based on the 1980 census[11], are listed in Table 9-6.

The DACRIN, HADOC, and PABLM computer models were used to estimate the 1-year and 50-year onsite and offsite radiation dose commitments as a result of the tank bump scenario.

The maximum onsite dose commitment is based on an individual located 100 meters downwind from the release point and spending a total of 5 minutes in the plume before donning a mask or exiting the area. The total dose commitment for this individual is the sum of the dose from direct radiation and the dose from inhalation of nuclides. A detailed description of assumptions, parameters, and dose contributions is contained in Reference 12. The total dose commitment for the maximum onsite individual is listed in Table 9-7.

TABLE 9-6. Estimated Distribution of Population Within a 50 mile Radius of the 200 Area Hanford Meteorological Tower by Population Grid Sector, 1980.

Compass direction	Number of people					
	0-10 mi	10-20 mi	20-30 mi	30-40 mi	40-50 mi	Totals
NORTH	0	174	1,124	772	1,957	4,027
NNE	0	92	656	5,547	14,822	21,117
NE	0	262	5,930	2,963	596	9,751
ENE	0	235	773	2,366	435	3,809
EAST	0	340	1,329	1,659	588	3,916
ESE	0	283	1,374	230	652	2,539
SE	0	6,757	48,661	50,519	3,474	109,411
SSE	0	1,997	13,161	2,717	5,218	23,093
SOUTH	0	1,532	1,489	195	1,799	5,015
SSW	0	905	5,283	652	129	6,696
SW	0	1,190	19,786	2,182	459	23,617
WSW	5	1,840	5,063	15,088	4,573	26,569
WEST	32	648	949	6,874	78,635	87,138
WNW	73	444	802	833	2,833	4,985
NW	0	555	398	493	1,454	2,900
NNW	0	246	456	864	4,521	6,087
TOTALS	110	17,500	107,234	93,954	122,145	340,943

TABLE 9-7. Calculated Dose Commitment to the Maximum Onsite Individual Following a Tank Bump Accident (rem).

Commitment period	Whole body	Bone	Lung
1 year	5.4	67	75
50 year	22	320	75

Two individuals were identified for consideration of the maximum offsite total dose commitment. The first individual is located 9 km from the point of release on Highway 240 (the closest public approach). This individual remains in the plume for the full duration of the tank bump release (70 minutes) and receives his exposure from external whole-body irradiation and inhalation of nuclides. The total calculated dose commitment to this person is listed in Table 9-8. The second individual is a farmer in the Ringold area located 16 km from the point of release. He receives external whole-body irradiation (70 minutes) and internal exposure through inhalation and ingestion of nuclides. The total calculated dose commitment for the hypothetical Ringold farmer is listed in Table 9-9. For conservative dose calculations, the exposed individuals are assumed to receive external exposure and inhale nuclides during the entire time the plume passes. In this case, it is equated to 70 minutes, the estimated time from a past tank bump. This would not necessarily be the same time for both individuals, but the time-integrated exposure would become nearly the same.

TABLE 9-8. Calculated Dose Commitment to an Individual on Highway 240 Following a Tank Bump Accident (rem).[a]

Commitment period	Whole body	Bone	Lung
1 year	0.3	3.6	4.0
50 year	1.2	17	4.0

[a]70-minute exposure to passing plume.

TABLE 9-9. Calculated Dose Commitment to a Hypothetical Ringold Farmer Following a Tank Bump Accident (rem).

Commitment period	Whole body	Bone	Lung
1-year commitment/ 1-year exposure[a]	0.33	2.4	1.8
50-year commitment/ 1-year exposure[a]	2.0	13	1.9
50-year commitment/ 50-year exposure[a]	13	53	2.3

[a]Period of consumption of home grown foods.

9 2 1 2 5 6 2 1 2 6 7

The potential dose commitment from a tank bump to the offsite population within 50 miles of the Hanford 200 Areas was calculated using the population data listed in Table 9-6. The same computer codes as before were used for calculation of the maximum individual doses. The wind was assumed to be towards Richland (SE) to maximize the number of offsite residents potentially exposed. The results of the calculations are presented in Table 9-10.

TABLE 9-10. Calculated Population[a] Dose Commitment Following a Tank Bump Accident (Man-rem).

Commitment period	Whole body	Bone	Lung
1-year commitment/ 1-year exposure[b]	1,700	13,000	12,000
50-year commitment/ 1-year exposure[b]	8,900	70,000	12,000
50-year commitment/ 50-year exposure[b]	43,000	190,000	14,000

[a]An estimated 109,400 persons resided within 50 miles of the Hanford 200 Areas in the SE sector (1980 census).(11)

[b]Period of consumption of contaminated foods.

9.3.3.3 Hazard Level and Risk. Three hazard levels are established in Reference 13 to define SAR review requirements. Hazard levels are defined in terms of the whole-body total (internal plus external) dose commitment potentially received during the first year by the onsite and offsite maximum individual. The numerical values associated with each hazard level are listed in Table 9-11.

Comparison of hazard level values to projected total dose commitments as a result of a tank bump shows that the onsite whole-body dose places the tank bump event in a moderate hazard level. The relationship of radiation dose commitments for organs other than the whole-body to the three hazard levels can be derived by choosing the annual dose commitment standards given in Reference 14 to be the low hazard value as was done for the whole-body (see Table 9-12).

TABLE 9-11. Whole-Body Radiation Dose Commitments Corresponding to the Three Hazard Levels (rem).[a]

Hazard level	Offsite	Onsite
Low	≤0.5	≤5
Moderate	>0.5 to <5	>5 to <25
High	≥5	≥25

[a]Total dose (internal plus external) received in the first year following the accident.

TABLE 9-12. Organ Radiation Dose Commitments Corresponding to the Three Hazard Levels (rem).[a]

Hazard level	Offsite			Onsite		
	Whole body	Lung	Bone	Whole body	Lung	Bone
Low	≤0.5	≤1.5	≤1.5	≤5	≤15	≤30
Moderate	>0.5 to <5	>1.5 to <15	>1.5 to <15	>5 to <25	>15 to <75	>30 to <150
High	≥5	≥15	≥15	≥25	≥75	≥150

[a]Total dose (internal plus external) received in the first year following the accident.

Comparing the values in Table 9-12 to Table 9-7, the hazard level would be Moderate to High based on the first year onsite lung dose.

The risk is the product of the whole-body dose commitment times probability of occurrence. Reference 13 defines levels of risk which are deemed to be acceptable. Risks are acceptable if they are <0.03 rem/yr for onsite personnel and <0.005 rem/yr for offsite personnel. In the case of a tank bump, the probability is assumed to be 1×10^{-3} per year, i.e., one event per 1,000 years operation.

The calculated risk for onsite and offsite individuals for this accident are listed in Table 9-13.

9212562169

TABLE 9-13. Calculated Risk Following a Tank Bump Accident.

Location	Dose (rem)	Probability $(yr)^{-1}$	Risk (rem/yr)
Onsite	5.4	1×10^{-3}	0.005
Offsite			
Highway 240	0.3	1×10^{-3}	0.0003
Ringold	0.24	1×10^{-3}	0.0002

It is therefore concluded that the risk for this worst case accident is "acceptable" even though the hazard level is Moderate to High. It should be remembered that the radiation doses calculated for the tank bump accident are highly conservative. This conservatism is present because the quantity of radioactive material assumed to be released during the tank bump is at least an order of magnitude higher than could reasonably be expected to escape.

9.3.4 Tank Leak

Verified leakage from the Hanford waste storage tanks has been limited to single-shell tanks. Approximately 60% of all the single-shell tanks which held aging-waste have leaked. One double-shell tank (241-AY-101) has held aging-waste for a short period (~2 years) without leaking.

Three types of tanks have held aging-waste:

- Single-shell, with five airlift circulators, not heat treated (SX and A tank farms)
- Single-shell, with 22 airlift circulators, heat treated (AX tank farms)
- Double-shell, primary tank with 22 airlift circulators, heat treated (AY tank farm).

Seventeen tanks in the SX and A tank farms have held aging waste for an integrated 180 tank-years of experience. In this time, 11 of the 17 tanks have either failed or may have failed (classified as "questionable integrity").[15]

Only the four single-shell AX tanks are similar in design and construction (including the number, type, and arrangement of airlift circulators) to the primary tanks of the double-shell tanks of the Aging-Waste Facility. The four AX tanks held aging-waste for ~10 to 15 years. In this time, one tank may have leaked (classified as "questionable integrity").

9 2 1 2 5 6 2 1 2 7 0

It is postulated for purposes of this analysis that the location at which a tank leak would occur is either at the air-liquid interface of a previously established liquid level or at the tank bottom.

The air-liquid interface could become a problem if a liquid level were established and maintained for a period of time and then the liquid level were increased above the pre-established level. The previous liquid level location might become a weak point in the tank wall. The liquid waste volume in place above the previous liquid level represents the liquid volume potentially available for leakage. The 102-AZ Tank has a current waste volume of 830,000 gallons, the projected fill volume of aging-waste is 968,000 gallons. This provides an available liquid waste volume of 140,000 gallons should a leak develop at the current liquid level.

Failure at the bottom of the tank could occur when moisture in the concrete below the tank becomes heated, building up pressure between the concrete and the steel tank. If the pressure were to build until it were sufficient to bulge the tank bottom upwards, it might in the process, crack the steel tank.[15,16] This is not considered to be a problem for the primary tank of a double-shell tank because the annulus ventilation system removes sufficient heat from the bottom of the tank to limit the pressure buildup. However, if the primary tank should leak, the described stress could jeopardize secondary tank containment.

The air-liquid interface type of leak is used as the mode of primary tank leakage for this analysis. A probability of this type of leakage occurring is assumed to be 0.017 per tank-year based on the single AX tank leak in the cumulative 60 tank-years of aging-waste storage experience at the AX tank farm.[17]

The probability of a leak developing in the secondary tank is assumed to be 0.01 per tank-year[15] based on two single-shell tanks failing in 180 tank-years of experience. Only one of these two tanks had a starting liquid heel and had been preheated.

9.3.4.1 Tank Leak Scenario. A primary tank leak occurs causing liquid waste to accumulate in the annulus. Some of the moisture is entrained in the annulus exhaust air and carried up the annulus ventilation ducts where it is removed by the HEPA filters. Moisture continues to accumulate on the filters until the filters become plugged or until the system is shut down. Backup ventilation is assumed to be inoperable. When the annulus ventilation system is removed from service, containment and heat removal provided by the system is lost.

The annulus pump is assumed to fail, and the waste continues to leak to the tank annulus until a total of 140,000 gal of waste has accumulated. The temperature of the liquid which has leaked is approximately equal to the liquid temperature of the waste in the tank (220°F). Although the concrete in intimate contact with the secondary tank provides a substantial heat sink, the heat removal provided by the airlift circulators within the primary tank is lost. The net effect of the concrete heat sink versus the heat removal of the airlift circulators is therefore assumed to lead to minimal heat removal.

9 2 1 2 5 6 2 1 2 7 1

The liquid waste in the annulus becomes heat stratified and sediment forms. Additional heat is transmitted to the bottom of the secondary tank causing pressure to build up between the concrete and the secondary tank as well as a pressure buildup under the sediment within the annulus. The pressure is relieved when an annulus bump occurs (consequences of this event are less than the primary tank bump previously analyzed). Pressure between the concrete liner and the secondary tank combined with the thermal stress causes the secondary tank to crack, releasing 100,000 gallons of waste to the soil. The remaining 40,000 gallons of waste is retained in the annulus in pools and solids.

9.3.4.2 Tank Leak Analysis. The liquid volume released determines the dispersion of the waste, and the nuclide concentration determines soil contamination levels.

A finite element flow model scenario was developed and used to analyze the impact of a postulated tank leak of 100,000 gallons.[18] The soil concentration of the leaked liquid was found to approach the moisture level in the surrounding soil 1 year after the leak occurred. After 1 year, the mobility and concentration of nuclides in the unsaturated (vadose) zone are controlled by the amount of natural drainage, and the sorption characteristics of the soil.

Modeling of the mobility after the first year was undertaken to determine the time required for specific radionuclides to reach the water table[18]. The results are summarized in Table 9-14.

TABLE 9-14. Estimate Time for Selected Radionuclides to Reach Ground Water (yr).[a]

Nuclide	Time to reach ground water (yr)	Half life (yr)
^{90}Sr	7,460	29
^{106}Ru	70	1
^{137}Cs	3,730	30
^{239}Pu	220,000	24,000
^{240}Pu	220,000	6,540

[a]Following a postulated aging-waste tank leak of 100,000 gallons.

Given the concentrations released (Table 6-2) and the half lives of the nuclides, the concentrations arriving at the water table would be below the Federal guidelines for drinking water.[14] The evaluation also concluded that "no level of soluble organics added during denitration would be expected to alter (soil) sorption."[18]

9 2 1 2 5 6 2 1 2 7 2

As a result of the above analysis, it was concluded that the impacts of this accident are restricted to environmental (contamination of a soil column) and economic (loss of a double-shell aging-waste tank). On the basis of the qualitative definitions for hazard levels given in Reference 19, the tank leak accident should be classed as a Moderate hazard. There would be a considerable potential for onsite contamination and a large expense involved in constructing a replacement tank, but no offsite impacts. Reference 19 states that:

> "Public interest, political sensitivity, and program importance...may dictate a higher level than would be needed soley for health, safety or environmental reasons."

If the tank leak accident were found to fit this description it might then be classed as a High hazard.

9.4 REFERENCES

1. Internal Letter #DRE-72910-82-014, November 17, 1982, "Aging-Waste Facility Safety Analysis Report Release Source Terms," D. R. Ellingson to R. C. Stupka and L. H. Rodgers, Rockwell Hanford Operations, Richland, Washington.

2. Internal Letter #65411-83-017, January 28, 1983, "Additional Sludge Height Limitations and Suggested Down Time for Air-Lift Circulators," M. I. Fineman/D. C. Riley to D. R. Ellingson, Rockwell Hanford Operations, Richland, Washington.

3. Internal Letter #72320-83-060, February 17, 1983, "Dose Calculations for the Aging-Waste Facility Safety Analysis Report," D. B. Howe to D. R. Ellingson, Rockwell Hanford Operations, Richland, Washington.

4. SDC-220-FDC-001, May 1982, Functional Design Criteria Waste Transfer Facilities Project B-220, J. L. Wise and A. L. Shord, Rockwell Hanford Operations, Richland, Washington.

5. Internal Letter #DRE-72910-83-001, January 19, 1983, "Radiation Contamination Levels," D. R. Ellingson to M. R. Borsik, Rockwell Hanford Operations, Richland, Washington.

6. SD-WM-TI-047, November 1982, Maximum Heat Generation and Isotopic Activity Within an Aging-Waste Tank, C. M. Kronvall, Rockwell Hanford Operations, Richland, Washington.

7. RHO-MA-220, Rev. 1, February 1983, Radiological Standards and Operational Controls, Radiological Engineering Staff, Rockwell Hanford Operations, Richland, Washington.

8. SD-WM-TI-073, April 1983, Aging-Waste Operational Summary, J. H. Lawler, Rockwell Hanford Operations, Richland, Washington.

9212562 1273

9. WASH-1400 (NUREG 75/014), October 1975, An Assessment of Accident Risks in U.S. Commercial Nuclear Power Plants, U.S. Nuclear Regulatory Commission, Washington, D.C.

10. ARH-CD-719, May 1977, Operational Safety Analysis Report Double-Shell Waste Storage Tanks, J. E. Mirabella and N. P. Willis, Atlantic Richfield Hanford Company, Richland, Washington.

11. PNL-4010, November 1981, Population Estimates for the Areas Within a 50-Mile Radius of Four Reference Points on the Hanford Site, D. J. Sommer, R. G. Rau, and D. C. Robinson, Pacific Northwest Laboratory, Richland, Washington.

12. Internal Letter #72320-83-073, February 23, 1983, "Onsite and Offsite Dose Commitments from Bumping Accident for Aging-Waste Facility SAR," D. B. Howe to D. R. Ellingson, Rockwell Hanford Operations, Richland, Washington.

13. RHO-HS-MA-1, December 1981, Safety Analysis and Report Preparation Guide, G. M. Christensen, Rockwell Hanford Operations, Richland, Washington.

14. DOE Order 5480.1A, December 1981, Environmental Protection, Safety, and Health Protection Program for DOE Operations, Chapter XI, "Requirements for Radiation Protection," U.S. Department of Energy, Washington, D.C.

15. RHO-R-39, June 1981, Boiling Waste Tank Farm Operational History, W. L. Godfrey and W. C. Schmidt, Rockwell Hanford Operations, Richland, Washington.

16. HW-57274, August 1958, Instability of Steel Bottoms in Waste Storage Tanks, L. E. Brownell, General Electric Company, Richland, Washington.

17. RHO-RE-SR-14, April 1982, Waste Status Summary, D. C. McCann, Rockwell Hanford Operations, Richland, Washington.

18. Internal Letter #72710-83-213, February 4, 1983, "Soil Release Calculations - Aging-Waste Facility Safety Analysis Report," M. J. Graham to D. R. Ellingson, Rockwell Hanford Operations, Richland, Washington.

19. DOE Order 5481.1A, August 1981, Safety Analysis and Review System, U.S. Department of Energy, Washington, D.C.

9 2 1 2 5 6 2 1 2 7 4

10.0 CONDUCT OF OPERATIONS

The Aging-Waste Facility provides storage space for neutralized high-level aqueous waste (NHW) resulting from processing of irradiated reactor fuels at PUREX. Operations conducted within the facility include receipt of the waste, measuring and monitoring of major parameters to ensure continued containment of the waste, transfer of wastes, and the collection and reporting of data to operational management for further dissemination as appropriate. The facility is manned 5 days a week on the 8 to 4 shift. Off-shift coverage is provided by the Computer Automated Surveillance System (CASS) and centrally located operations personnel.

10.1 OPERATING ORGANIZATION

Many of the operations conducted within the Aging-Waste Facility require the interaction of several Functions: Research and Engineering (R&E); Health, Safety and Environment (HS&E); Quality Assurance (QA); and others. Overall responsibility for operation of the facility is assigned to the Tank Farm Surveillance and Operations (TFS&O) Department. The relationship of the TFS&O Department and tank farm groups within the RHO management organization is shown in Figure 10-1.

10.1.1 Tank Farm Processing Operations

The Tank Farm Processing Operations Group is responsible for the following activities that directly pertain to the Aging-Waste Facility:(1)

- Receipt of waste transfers into Aging-Waste Facility
- Shift coverage of TFS&O
- Support of Tank Farm Maintenance Operation
- Control and operation of CASS
- Surveillance of tank farm processing facilities.

10.1.2 Tank Farm Services

Tank Farm Services is the lead group for providing the following activities within the Aging-Waste Facility:(1)

- Radioactive waste storage and disposal
- Contamination control operations
- Collection of surveillance data from waste storage tanks.

9 2 1 2 5 6 2 1 2 / 5

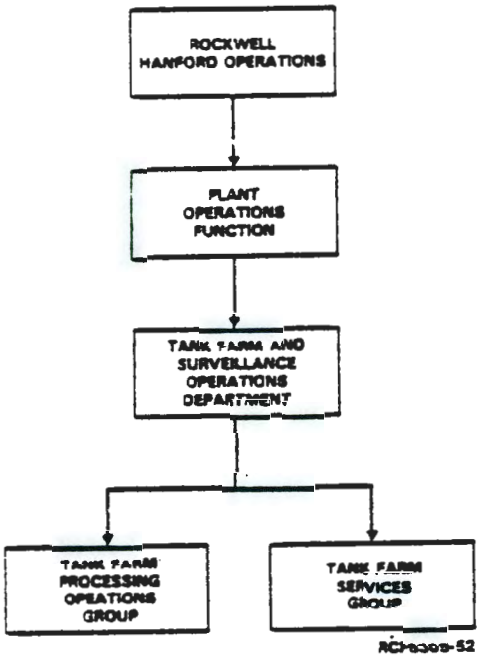

FIGURE 10-1. Tank Farm Operations Organization.

10.2 PREOPERATIONAL TESTING

Readiness review is conducted as required in the QA Manual, RHO-MA-150 Procedure 9.301[2], prior to startup of significant processes that qualify under the criteria defined in Rockwell Policies, RHO-MA-100, PM QA 2-300.[3]

A pre-job safety analysis is performed as required in Accident Prevention Standard 2 of RHO-MA-221[4] prior to startup of operations which do not qualify for the readiness review. The objectives of these two types of preoperational reviews include:

- Identifying and correcting construction deficiencies
- Training operation and supervisory personnel
- Demonstrating the operational readiness of the facility on an integrated system basis.

10.3 TRAINING

It is the policy of Rockwell to ensure that personnel are qualified to perform their duties in a safe, efficient, and effective manner. To implement this policy, formal and on-the-job training is conducted. Training programs associated with the operation of the Aging-Waste Facility provide employees with both knowledge and skills required to perform assigned work. The training programs also prepare individuals to take prompt, effective action in response to abnormal or emergency conditions.

Currently, it is planned to formally certify each operator whose duties include coverage of the Aging-Waste Facility. To become certified, the operator will have to demonstrate a thorough knowledge of the facility, its operation, and responses to normal and off-standard situations. Documentation of certification will be maintained by the Rockwell Training Department.

10.4 NORMAL OPERATIONS

Plant Operating Procedures (POP) and Standard Operating Procedures (SOP) are prepared for anticipated and frequent activities performed within the Aging-Waste Facility. The procedures are prepared in accordance with the Engineering Procedures Manual.(5) Prior to acceptance, procedures undergo review, and a "walk-through" using the procedures is conducted to ensure the safe performance of the task.

Changes to an approved procedure can be accomplished either by issuing a revised procedure or by altering the existing procedure using a Procedure Departure Authorization (PDA).(6) PDAs include HS&E review and approval before implementation. The use of PDA is restricted to one of the following situations:

- A temporary departure from the procedure is needed due to temporary equipment or process changes of such duration (normally less than 2 months) that make the normal procedure change and release process impractical

- A permanent change must be implemented immediately to either correct procedural errors/amoiguities that could result in operating errors or unsafe procedure performance or to provide for essential equipment or process changes not anticipated previously.

10.5 EMERGENCY PLANNING

Emergency plans for the Aging-Waste Facility and all other tank farms are contained in RHO-MA-111.5.(7) This emergency manual contains procedures for coping with various types of emergencies. The procedures define actions to be taken, including specific individual responsibilities, to achieve protection of personnel, facilities, and the environment. The emergency action coordinator for the Aging-Waste Facility is the TFS&O Manager. The on-duty shift manager acts as the emergency action coordinator during off-shift hours until relieved by the TFS&O Manager.

10.6 REFERENCES

1. RHO-MA-272, November 1981, Tank Farm Surveillance and Operations, Number TF 2-001, Departmental Responsibilities, Rockwell Hanford Operations, Richland, Washington.

2. RHO-MA-150, June 1977, Quality Assurance Manual, Procedure 9.301, R. D. Hammond, Rockwell Hanford Operations, Richland, Washington.

3. RHO-MA-100, July 1977, Policies, PM-QA-2-300, D. J. Cockeram and P. J. Fritch, Rockwell Hanford Operations, Richland, Washington.

4. RHO-MA-221, March 1979, Accident Prevention Standards, Vol. 1 and 2, Industrial Hygiene and Safety Department staff, Rockwell Hanford Operations, Richland, Washington.

5. RHO-MA-115, October 1981, Engineering Procedures Manual, Section 2-8.5, Operating Procedures, Engineering Management Systems staff, Rockwell Hanford Operations, Richland, Washington.

6. RHO-MA-115, May 1982, Engineering Procedures Manual, Section 5-9.1, Procedure Departure Authorization, Engineering Management Systems staff, Rockwell Hanford Operations, Richland, Washington.

7. RHO-MA-111.5, January 1983, Emergency Plan - Tank Farms, Rockwell Hanford Operations, Richland, Washington.

11.0 OPERATIONS SAFETY REQUIREMENTS

11.1 INTRODUCTION

The Operations Safety Requirements (OSR) contained in this chapter have been prepared according to RHO-MA-115,(1) Section 2-8.1. These OSR define management, design and process controls which assure safe operation of aging-waste facilities. The 25 requirements are distributed among 5 major categories forming sections 11.2 - 11.6 of this document.

Each of these OSR has the following format:

- applicability
- objective
- requirement
- basis - justification for requirement
- recovery - action taken if requirement is violated.

11.2 SAFETY LIMITS AND LIMITING CONTROL SETTINGS

Safety Limits are those values of measurable safety-related variables outside of which serious consequences may occur. Violation of a safety limit constitutes a violation of an OSR. The limiting control settings are established within safety limits to allow for activation of alarms and for subsequent corrective action before the safety limit is reached. Exceeding a limiting control setting is not an OSR violation; however, failure to respond to the agreed upon plan for recovery from a limiting control setting violation is an OSR violation.

11.2.1 Tank Pressurization

- Applicability - This requirement applies to the aging-waste facility ventilation system, air lift circulators and instrumentation.

- Objective - The purpose of this requirement is to prevent release of radioactive materials to the environment due to pressurization of the tanks.

- Requirement - Safety Limits: Primary aging-waste tanks shall not discharge radioactive materials to the atmosphere at concentrations greater than the DOE Concentration Guides listed in Table I.(2,3)

  Limiting Control Setting: High Pressure Alarms shall operate at a vacuum of less than -0.1 in. water gauge in the primary tank whenever air lift circulators are operating.

- Basis - Pressurization of a tank could cause release of contaminated effluent to the atmosphere. AY and AZ Primary Tanks are equipped with differential pressure indicating alarms for both excessive and insufficient vacuum.

- Recovery - If this requirement is violated, the shift manager shall contact the managers of Tank Farm and Surveillance Operations Department (TFS&O) and Tank Farm and Evaporator Processing Control (TF&EPC). Radiation Monitoring shall also be contacted. The system shall promptly be restored to within the requirement. Recovery actions may include manipulation of the 702-A Vent System or backup exhauster*, air lift circulators and amount of air inleakage permitted to the tanks.

- Audit Point - High Tank Pressure Alarm Settings are set forth in Process Specifications. High tank pressure alarm switches are calibrated per Instrument Calibration Documents. Discharges exceeding the requirement are documented in Occurrence Reports. Tank pressures are recorded once each shift per standard operating procedure. Data sheets are maintained by Tank Farm and Evaporator Process Control.

11.3 LIMITING CONDITIONS FOR OPERATIONS

This section establishes minimum performance levels for all safety-related equipment.

11.3.1 Equipment

This subsection defines requirements for continued, safe operation of all equipment: ventilation, process, utilities, and services.

11.3.1.1 Tank Vacuum.

- Applicability - This requirement applies to the Aging-Waste Facility ventilation system, air lift circulators and instrumentation.

- Objective - The purpose of this requirement is to assure that tank integrity is not jeopardized due to excessive vacuum.

- Requirement - Primary aging-waste tank vacuum shall not exceed 6 in. water gauge with respect to the atmosphere.

---

*The existing backup exhauster must be manually started and valved in, resulting in a few minutes delay between failure of spare ventilation fan and restoration of tank vacuum. A tank containing aging-waste that is boiling could pressurize during the delay. The new backup exhauster will start up and be valved automatically.

- Basis - Excess vacuum in a double shell tank could create high stresses in the steel of the primary tank wall. HWS-7789,[4] specifications for AY Tanks and HWS-8982,[5] specifications for AZ Tanks, show design operating vacuum pressure allowances of 6 in. water gauge in aging-waste tanks. AY and AZ Primary Tanks are equipped with differential pressure indicating alarms for both excessive and insufficient vacuum.

- Recovery - If this requirement is violated, the shift manager shall contact the managers of TFS&O and TF&EPC. The system shall promptly be restored to within the requirement. Recovery actions may include manipulation of the 702-A Vent System, air lift circulators and amount of air inleakage permitted to the tanks.

- Audit Point - High Tank Vacuum Alarm Settings are set forth in Process Specifications. High Tank Vacuum Pressure Switches are calibrated per Instrument Calibration Documents. Tank pressures are recorded once each shift per standard operating procedure. Data sheets are maintained by Tank Farm and Evaporator Process Control.

11.3.1.2 Primary Tank Leak Detection.

- Applicability - This requirement applies to 241-AY and 241-AZ Tanks.

- Objective - The purpose of this requirement is to verify the integrity of primary aging-waste tanks.

- Requirement - The annuli of aging-waste tanks shall be equipped with at least one operable leak detection device.

- Basis - This requirement must be satisfied in order to comply with U.S. Department of Energy - Richland Operations Office DOE Order RL 5820.2,[6] which requires routine assessment of the integrity of containment systems. Leak detection in the annulus is necessary to provide notification so that corrective action can be initiated if a primary waste tank develops a leak. Primary leak detection is accomplished by radiation monitors installed upstream of High Efficiency Particulate Air (HEPA) filters in annulus vent systems. Each annulus also contains conductivity probe leak detectors and manual liquid level tapes.

- Recovery - If this requirement is violated, the shift manager shall notify the manager of TFS&O. The manager of TFS&O is responsible for meeting the requirement.

- Audit Point - Annulus Radiation Monitors and leak detectors are functionally tested per Instrument Calibration Documents. Radiation Alarm set points are determined by RHO-MA-139. Records of both Radiation Monitor Functional Tests and Leak Detector Functional Tests are maintained by Tank Farm Maintenance.

11.3.1.3 Continuous Air Effluent Monitoring.

- Applicability - This requirement applies to the 241-A-702 Exhauster and to the 241-AY and 241-AZ Annulus Exhauster.

- Objective - The purpose of this requirement is to monitor release of radioactive material to the environment and alarm when the radioactive release limits are exceeded.

- Requirement - Effluent gases and particulates in exhaust stacks shall be monitored continuously for gross beta/gamma activity. The monitor shall provide visual and audible alarms at release concentrations as low as possible without causing excessive numbers of alarms due to normal fluctuations in background or releases. The concentration level at which the alarms are set to trigger shall not exceed four times the Concentration Guide in Table I for the most restrictive nuclide present (^{90}Sr).[2,3]

- Basis - Continuous monitoring of exhaust air activity and alarms at specified levels are required to provide notification so that corrective action can be initiated if excessive concentrations occur. This requirement also verifies the integrity of HEPA filters. DOE Order 5480.1A, Chapter XI[2] defines requirements for radiological protection.

- Recovery - If this requirement is violated, effective continuous monitoring with proper alarm settings shall be promptly reestablished. The shift manager shall immediately notify the managers of TFS&O and TF&EPC. Further notifications shall include the manager of Tank Farm Surveillance and Analysis. Corrective action shall be taken to reduce any discharge of radioactive materials to below the alarm settings.

- Audit Point - Continuous Air Effluent Monitors are tested per Instrument Calibration Documents. Alarm set points are determined by RHO-MA-139. Records of CAM calibrations are maintained by Tank Farm Maintenance.

11.3.1.4 Effluent Air Record Sampling.

- Applicability - This requirement applies to the 241-A-702 Process Ventilation System and to the 241-AY and 241-AZ Annulus Ventilation Systems.

- Objective - The purpose of this requirement is to verify that the average concentrations of radionuclides in the gaseous effluents did not exceed the Concentration Guides in DOE Table I[2] at the point of discharge.

9212562139

- Requirement - Gases which are exhausted from aging-waste facilities shall be sampled for particulate activity. Samples shall be collected monthly and analyzed for gross beta/gamma and gross alpha radioactivity.

- Basis - Periodic sampling and analysis permits identification and estimation of radioactive emissions, and further they detect abnormal release patterns which might indicate deteriorating filter efficiencies.

- Recovery - If this requirement is violated, the shift manager shall notify the managers of TFS&O and TF&EPC. Further notification shall include the Manager of Tank Farm Surveillance and Analysis. Since aging-waste operations cannot be shut down, the required sampling activities shall be restored within 72 hours. Transfers of radioactive waste to the aging-waste tanks shall be halted or curtailed as appropriate until the requirement is met.

- Audit Point - Annual and Quarterly Reports are made to the Department of Energy by the Health, Safety and Environment Function on the results of Record Sample Analyses.

11.3.2 Radiation and Environment

This subsection defines minimum acceptable operating conditions for assurance of protection of the environs from unwarranted radioactive contamination, as well as protecting operating personnel and the public from ionizing radiation.

11.3.2.1 Filtration of Air Effluent.

- Applicability - This requirement applies to the 241-A-702 Process Ventilation System for aging-waste tanks and to the 241-AY and 241-AZ annulus exhausters.

- Objective - The purpose of this requirement is to assure that gaseous process effluents and potentially contaminated annulus exhausts do not, on the average, contain higher concentrations than those listed in Table I of the DOE Concentration Guides.(2)

- Requirement - Air exhausted from aging-waste tanks and annuli shall pass through two stages of HEPA filtration rated separately at an efficiency of 99.95% or more for particles greater than 0.3 μm in size.

- Basis - The use and efficiency testing of HEPA filters enables the facility to meet DOE Safety Criteria for releases. Operating experience has shown that gaseous effluents from ventilation systems serving primary waste tanks are contaminated and annulus exhausts are potentially contaminated in the event of a tank leak.

9 2 1 2 5 6 2 1 3 3 8

- Recovery - If this requirement is violated, the shift manager shall immediately notify the manager of TFS&O. Restoration of two stages of HEPA filters shall be made as soon as possible, and not later than 72 hours after notification of the manager of TFS&O.

- Audit Point - HEPA filtration is required by process specifications. In-place DOP test records for HEPA filters are maintained by Ventilation Balance Unit.

11.3.2.2 Diversion of Steam Condensate.

- Applicability - This requirement applies to operation of the Gross Gamma Monitor and Motor Operated Valve in the F-505 Valve Pit and to the operation of the 216-A-8 Crib Monitoring and Sampling System.

- Objective - The purpose of this requirement is to prevent the discharge of contaminated steam condensate to the environment from aging-waste tank steam coils.

- Requirement - The steam condensate stream from aging-waste tank steam coils shall be equipped with diversion capability so the condensate can be confined in the event it becomes contaminated, above nondischargeable levels as specified in DOE Order RL 5820.2[4] and Table I Concentration Guides.[2]

- Basis - Steam condensate from aging-waste tank steam coils is not normally contaminated: however, a leak of process fluid into a steam coil could contaminate the stream. The Gross Gamma Monitor detects radiation in the condensate upstream of the diverter valve and automatically diverts the stream to the 241-A-417 Tank instead of the 216-A-8 Crib. The 216-A-8 Crib Sampling and Monitoring System (downstream of the diverter valve) automatically diverts the stream via the same valve as the Gross Gamma Monitor if radiation is detected downstream. Diversion capability is required by DOE-RL Order 5820.2.[6]

- Recovery - If this requirement is violated, operation of the steam coils shall be halted or curtailed as appropriate until this requirement is met. The shift manager shall notify the manager of TFS&O who shall prescribe the necessary repairs.

- Audit Point - The sampling/monitoring and diversion system is tested per Instrument Calibration Documents. These records are maintained by Tank Farm Maintenance.

11.3.2.3 Fissile Material

- Applicability - This requirement applies to the transfer of radioactive waste solutions to underground aging-waste tanks.

9 2 1 2 5 6 2 1 3 3 7

- Objective - The purpose of this requirement is to prevent a nuclear criticality.

- Requirement - The total amount of fissile material stored in an aging-waste tank shall not exceed 50 kg; maximum concentration in solutions routed to an aging-waste storage tank shall not exceed 0.05 g per gal. In addition, for each batch the maximum plutonium density possible after in-tank concentration shall not exceed one gram per liter.

- Basis - Criticality Prevention Specification CPS-T-149-00010, "Waste Storage Tanks and Associated Equipment"(7) limits the total amount and concentration of fissile material introduced into any storage tank.

- Recovery - If this requirement is violated, transfer of radioactive waste to the tank shall be halted or curtailed as appropriate. The shift manager shall notify the managers of Tank Farm Services and Tank Farm and Evaporator Process Control. The latter shall notify appropriate management, including the manager of Criticality Engineering and Analysis and the Program Manager. A recovery plan shall be prepared and formally approved by Rockwell Hanford Operations (Rockwell) Management. A discussion of "Recovery from Limit Violations" is contained in Section VIII of RHO-MA-136.(8)

- Audit Point - Records of Plutonium Inventory are maintained by Tank Farm and Evaporator Process Control.

11.3.2.4 Bumping.

- Applicability - This requirement applies to operation of air lift circulators in aging-waste tanks having any waste temperatures greater than 200°F.

- Objective - The purpose of this requirement is to prevent the release of radioactive material to the environment due to excessive boiloff rates or bumping in an aging-waste tank.

- Requirement - Air lift circulators shall supply a minimum total flow rate of 50 scfm of air to an aging-waste tank at all times except for periods not to exceed 15 hr before starting service restoration in any one 48 hr period.

  In addition to the minimum total flow requirement of 50 scfm, no more than two (2) adjacent circulators shall be out of service for more than 15 consecutive hours.

- Basis - Past operating experience and the results of experimental studies summarized on pages 7 and 41 of HW-39432(9), indicate that sudden increases in air flow rates can cause bumping or excessive

boiloff rates in solutions near boiling points. Continuous operation of air lift circulators reduces the settling of heat producing solids and the accumulation of superheat in the bottom of the tank. Calculations assuming worst case conditions of highest settling rates and assuming no natural convection in the solids, show that temperature excursions may occur 15 hours after all flow through circulators is halted.(10) Reference 9 recommends restarting circulators over a period of hours to prevent excessive generation of vapor. Circulator flow and configuration are controlled by procedure and operating specifications. Five hours minimum are allotted for the controlled restoration of 50 scfm flow from a total shutdown. In addition, the 401-A Condensers are designed to condense 20,000 lb/hr of steam, equivalent to removal of about 19.4 million Btu/hr from the aging-waste system. The maximum normal heat removed from one aging-waste tank via ventilation will be less than 4 million Btu/hr.

- Recovery - If this requirement is violated, the shift manager shall notify the managers of TFS&O and TF&EPC. Further notifications shall include the Program Manager. If necessary, as determined by the shift manager and Radiation Monitoring, personnel shall be evacuated from the tank farm until Radiation Monitoring completes a survey and recommends measures to be taken for safe reentry. Air supply to circulators shall be slowly restored or adjusted per the requirements of this OSR and/or raw water or condensate shall be returned to the tank for cooling as necessary. Based on the best information to date, resuspension of the settled solids can be readily achieved following restart of the airlift circulators. In a preliminary study by PNL,(11) a computer model of the circulators and resuspension process was used to calculate resuspension rates from various portions of the tank bottom, including places adjacent to the wall. The computer code used was a state-of-the-art, three-dimensional, time-dependent code developed at PNL to simulate turbulent fluid flow in vessels containing various amounts of piping and hardware. Results indicated that total resuspension of solids down to within 0.6 ft of the bottom was possible within 15 minutes after rapid restart of the airlift circulators.(11) Further simulations are planned including additional factors such as concentration dependent viscosity changes. Nevertheless, the preliminary results are probably accurate to within an order of magnitude. It is therefore highly likely that the limiting factor for the time required to achieve maximum resuspension is the rate of restoration of air flow through the circulators (limited by operating procedures and specifications to a minimum of 5 hr to reach 50 scfm.)

- Audit Point - Air lift circulator operation is controlled by Standard Operating Procedure and Process Memos. Low flow alarms indicate insufficient process air. These alarms are tested per Instrument Calibration documents.

11.3.3 Process

This subsection defines minimum acceptable process conditions for continued safe operation of the facility. Infractions normally involve operating personnel rather than equipment.

11.3.3.1 Waste Transfer System Leak Detection.

- Applicability - This requirement applies to process pipelines and associated encasements, pits and boxes in the Aging-Waste Facility.

- Objective - The purpose of this requirement is to verify the integrity of the aging-waste transfer system and to provide prompt notification of leaks from primary to secondary containment.

- Requirement - Aging-waste transfer system leak detectors shall be verified as operable before a transfer is initiated, or applicable diversion boxes/catchtanks shall be constantly manned during the transfer.

  Transfers shall be terminated if leak detection capability cannot be provided or is lost.

- Basis - Immediate detection of liquid which has leaked from primary piping to encasements, pits or boxes allows corrective action to be taken promptly to minimize the risk of discharge of radioactive material to the environment.

- Recovery - If this requirement is violated, the transfer shall be halted or curtailed as appropriate. The shift manager shall notify the manager of TFS&O. Transfers of NHW shall not resume until leak detection capability or constant surveillance is restored or verified.

- Audit Point - Leak detectors are tested per Instrument Calibration documents. Standard Operating Procedure requires verification of leak detector operability prior to transfers, and constant surveillance where leak detectors are inoperable.

11.3.3.2 Maximum Liquid Level.

- Applicability - This requirement applies to the transfer of material to aging-waste tanks.

- Objective - The purpose of this requirement is to prevent the flow of radioactive solutions out of a tank through side-fill process solution lines.

- Requirement - The maximum liquid or froth level in 241-AY and 241-AZ Tanks shall be less than 370 in.

- Basis - Process solution lines enter AY and AZ Tanks through the side wall at the 370.75 in. level. The cumulative negative construction tolerance is -1/2 in. Drawings H-2-64448 and H-2-64449 show the AY Farm tank and piping details. AZ Farm tank and piping details are shown on Drawings H-2-67316 and H-2-67317. Liquid levels are measured automatically by equipment which is connected to alarms and tested semiannually. Control of liquid and froth levels below 370 in. prevents the overflow of waste solution into process lines.

- Recovery - If this requirement is violated, the shift manager shall immediately notify the managers of Tank Farm Processing and TF&EPC. The tank shall be restored to compliance with the requirement. Radiation Monitoring shall survey the tank farm to determine whether any new radiological conditions are present that must be addressed.

- Audit Point - Liquid Level Alarms are tested per Instrument Calibration Documents. Maximum liquid levels are set per process specifications. Liquid levels are reported in Daily Operating Reports.

11.3.3.3 Chemical Composition.

- Applicability - This requirement applies to the transfer of solutions to aging-waste tanks.

- Objective - The purpose of this requirement is to prevent premature tank failure caused by corrosion.

- Requirement - The composition of waste stored in aging-waste tanks shall be controlled to achieve the most favorable corrosion rates possible in order to maximize tank life. A spare aging-waste tank shall be maintained for use in the event of premature failure of an operating tank.

- Basis - According to the Waste Management Operations Final Environmental Statement, ERDA-1538[12], the design life of AY and AZ Tanks is at least 50 years. The primary tanks are fabricated from heat-treated STM-A515 Grade 60 steel, which exhibited the lowest corrosion rate of many steels considered for use. Corrosion studies being conducted by Pacific Northwest Laboratory personnel[13] indicate that corrosion rates in waste tanks maintained at optimum operating conditions and at temperatures below 100°C would be less than 1 mil/yr. If the temperature is raised above 100°C, as it will be in the aging-waste tanks, corrosion rates are expected to exceed 1 mil/yr even under optimum operating conditions. The exact corrosion rates have not yet been defined, but are not expected to be high enough to lead to safety problems during the aging-waste tank operations. Control of waste composition to minimize corrosion is effected by adherence to approved Aging Waste Tank Operating Specifications and Flowsheets.

Materials which do not have compositions known to be within limits are sampled, analyzed and verified to be within specifications prior to transfer. Tank contents are also sampled as necessary to verify compliance with specifications. Exceptions for individual waste transfers may be allowed after consideration is given to existing tank contents. One such exception is for the A-417 tank contents which will be recycled back into an aging-waste tank where the receiving tank is known to have sufficient ion concentrations to meet the tank specifications.

- Recovery - If this requirement is violated, transfers of waste solution to aging-waste tanks shall cease or be curtailed as appropriate. The shift manager shall immediately notify the managers of Tank Farm Services and TF&EPC. A recovery plan shall be prepared and formally approved by Rockwell Management, and a reevaluation of tank service life shall be made.

- Audit Point - Composition limits are set by process specifications. Sampling is required by the tank farm sample schedule and by Standard Operating Procedures. Records of sample results are maintained by the Analytical Laboratories Department.

11.3.3.4 Temperature Control

- Applicability - This requirement applies to the operation of air lift circulators and steam coils and to the addition of material to the aging-waste tanks.

- Objective - The purpose of this requirement is to assure that tank integrity is not jeopardized due to thermal stresses.

- Requirement - The tank temperature distribution and heat-up rate shall be controlled so that tensile yield stress on the inside surface of the primary tank is not exceeded.

- Basis - Temperatures which cause the tensile yield stress on the inside surface of the tank to be reached may contribute to stress corrosion cracking. An analytical model is used to accurately predict tank stresses under changing operating conditions. The analytical model provides a basis for tank temperature specifications. Operation of air lift circulators and steam coils is controlled to prevent excessive temperatures and temperature gradients. Condensate and raw water may be added at a controlled rate to cool tank contents. Average sodium molarity is limited to 5 moles per liter to reduce precipitation of excess heat-producing solids.

- Recovery - If this requirement is violated, the shift manager shall notify the managers of TFS&O and TF&EPC. Tanks shall be restored to acceptable temperatures and temperature gradients as rapidly as is technically practical. Recovery actions may include adjustment of air lift circulator flow rate, addition of condensate or raw water, adjustment of steam coil flow rate, ventilation flow rate and removing waste from the aging-waste tank.

- Audit Point - Temperatures are routinely monitored by a Data Acquisition and Signal Conditioning System. Alarms for temperatures exceeding limits are connected to the Computer Automated Surveillance System which is manned 24 hours a day. Temperature limits are set by Process Specifications. Temperatures are reported daily by the CASS system. Records are maintained by Tank Farm and Evaporator Process Control.

11.3.3.5 Spare Aging-Waste Tank.

- Applicability - This requirement applies to operation of the spare aging-waste tank.

- Objective - The purpose of this requirement is to provide adequate spare aging-waste tank capacity.

- Requirement - The spare aging-waste tank shall be operated so that, in the event of a primary aging-waste tank leak, safe transfer to the spare tank is as rapid as technically feasible and economically practical.

- Basis - In the event of a leak in a primary aging-waste tank, some dilution of waste may be necessary to effect transfer to the spare tank. Use of steam coil and air lift circulators in the spare tank will increase available spare capacity, allowing more rapid transfer. Operation of aging-waste facilities is addressed by the Tank Farms Process Control Plan and by approved operating specifications.

- Recovery - If this requirement is violated, the shift manager shall contact the managers of TFS&O and TF&EPC. The system shall promptly be restored to within the requirement. Recovery actions may include repairs or manipulation of steam coils or air lift circulators.

- Audit Point - Operation of the spare aging-waste tank is guided by the Tank Farm PUREX Waste Process Control Plan and implemented by process memo.

11.4 SURVEILLANCE REQUIREMENTS

This section defines requirements for surveillance of those systems and components essential to safety under accident conditions, e.g., radiation alarms, criticality alarms, emergency ventilation equipment, effluent diversion/isolation values, etc.

11.4.1 Continuous Air Monitor Functional Tests

- Applicability - This requirement applies to the 241-A-702 Exhauster and to the 241-AY and 241-AZ annulus exhausters.

- Objective - The purpose of this requirement is to maintain adequate performance of continuous air monitors.

- Requirement - The continuous air monitor and alarm for exhaust stacks shall be functionally tested at least every 45 days with a sealed radioactive source traceable to NBS. Continuous air monitors shall be calibrated annually with respect to air flow and sensitivity.

- Basis - Continuous monitoring of exhaust air activity and alarms at specified levels are required to provide notification and initiate corrective action if excessive concentrations occur in the effluent. This requirement also verifies the integrity of HEPA filters. DOE Order 5480.1A, Chapter XI[2] defines requirements for radiological protection.

- Recovery - If this requirement is violated, effective continuous monitoring with proper alarm settings shall be promptly reestablished. The shift manager shall immediately notify the managers of TFS&O and TF&EPC. Further notifications shall include the manager of Tank Farm Surveillance and Analysis.

- Audit Point - Functional tests of continuous air monitors are specified by Instrument Calibration Documents.

11.4.2 Steam Condensate Diverter Functional Tests

- Applicability - This requirement applies to operation of the Gross Gamma Monitor and Motor Operated Valve in the F-505 Valve Pit and to the operation of the 216-A-8 Crib Monitoring and Sampling System.

- Objective - The purpose of this requirement is to verify the integrity of the Steam Condensate Diverter System.

- Requirement - Steam condensate diversion capability shall be tested at least quarterly with a sealed radioactive source by Tank Farm Maintenance Personnel.

- Basis - Steam condensate from aging-waste tank steam coils is not normally contaminated; however, a leak of process fluid into a steam coil could contaminate the stream. The Gross Gamma Monitor detects radiation in the condensate upstream of the diverter valve and automatically diverts the stream to the 241-A-417 Tank instead of the 216-A-8 Crib. The 216-A-8 Crib Sampling and Monitoring System (downstream of the diverter valve) automatically diverts the stream via the same valve as the Gross Gamma Monitor if radiation is detected downstream. Diversion capability is required by DOE RL Order 5820.2.(6) Testing will be done to verify the operability of this system.

- Recovery - If this requirement is violated, operation of steam coils shall be halted or curtailed as appropriate until this requirement is met. The shift manager shall notify the manager of TFS&O who shall prescribe the necessary testing.

- Audit Point - Diversion capability testing is specified by Instrument Calibration documents.

11.4.3 HEPA Filter Efficiency Tests

- Applicability - This requirement applies to the 241-A-702 Process Ventilation System for aging-waste tanks and to the 241-AY and 241-AZ annulus exhausters.

- Objective - The purpose of this requirement is to verify the efficiency of HEPA filters used to control gaseous process effluents and potentially contaminated annulus exhausts.

- Requirement - The HEPA filters shall be tested using standard test techniques following replacement and annually thereafter, with intervals not to exceed 15 months. If the tests demonstrate an efficiency of less than 99.95%, for particles greater than 0.3 microns in size, the filters shall be replaced.

- Basis - The use of HEPA filters of the required efficiency enables the facility to meet DOE Safety Criteria for releases. Operating experience has shown that gaseous effluents from ventilation systems serving primary waste tanks are contaminated. Annulus exhausts are potentially contaminated in the event of a tank leak. Testing verifies the integrity of primary containment.

- Recovery - If this requirement is violated, the shift manager shall immediately notify the manager of TFS&O. Delinquent efficiency tests shall be completed within five working days after notification.

- Audit Point - Efficiency testing of HEPA filters is required by Process Specifications and RHO-MA-139. Records of tests are maintained by Utility Operations and Services.

11.5 DESIGN FEATURES

This section defines requirements to control design changes of equipment necessary for safety of operations.

11.5.1 Radioactive Liquid Organic Waste

- Applicability - This requirement applies to design of aging-waste facilities.

- Objective - The purpose of this requirement is to prevent the release of radionuclides to the environment as the result of discharge of radioactive liquid organic waste.

- Requirement - The Aging-Waste Facility shall be designed, constructed and maintained so that radioactive liquid organic waste is not discharged to the ground.

- Basis - DOE-RL Order 5820.2[6] requires containment of radioactive liquid organic waste. Organics may reduce the capacity of Hanford soil to absorb radionuclides from contaminated liquid waste. Small amounts of dissolved organic material are present in PUREX Neutralized High Level Waste (NHW). This material may be steam stripped into the condensate collection tank 241-A-417, which overflows to the 101-AN-010 pit and is not connected to any line leading to the environment.

- Recovery - If this requirement is violated, the shift manager shall notify the managers of TFS&O and TF&EPC and the Program Manager. The appropriate Design Engineering Manager shall be contacted and the design shall be modified to prevent the release of organic material.

- Audit Point - Design changes are reviewed per the Engineering Procedures Manual, RHO-MA-115.

11.5.2 Continuous Operation

- Applicability - This requirement applies to operation of aging-waste facilities.

- Objective - The purpose of this requirement is to provide maximal continuous operation of components required for safe operation of aging-waste facilities.

- Requirement - The following equipment shall be equipped with emergency power, emergency water supply, or backup capability as appropriate.

  1. 241-A-702 Exhaust Fans (emergency power, backup capability)

  2. 241-A-401 Condenser Cooling Water Supply (emergency power, backup capability)

  3. 241-A-701 Compressors - Process Air Supply (emergency power, backup capability)

  4. 241-AY-801 Data Aquisition and Signal Conditioning (DASC) System Temperature Monitoring System (emergency power).

- Basis - Continuous operation of this equipment is necessary since the self boiling of aging-waste cannot be rapidly terminated. Loss of ventilation or cooling water may allow tanks to pressurize. Loss of process air may cause temperature excursions. Emergency power supplies and the spare diesel compressor are checked weekly for operability. 241-A-702 backup capability and the Emergency Cooling Water System are checked at least biweekly. The DASC System provides data essential for controlling the aging-waste process.

- Recovery - The shift manager shall notify the Operations manager if backup systems are inoperable. Repairs shall be initiated immediately.

- Audit Point. Equipment status changes are recorded in the 272-AW Log Book which is maintained by Tank Farm and Surveillance Operations Department.

11.5.3 Review and Approval of Facility Modifications

- Applicability - This requirement applies to the following aging-waste facility components and systems:

  1. Ventilation systems

  2. Radiation shielding structures and features

  3. Radioactive contamination containment structures and partitions

  4. Tank cooling systems (circulators, condensate recycle, etc.)

  5. Liquid level measuring devices

  6. Temperature monitoring devices

  7. Surveillance systems

8. Instrument engineering flow diagrams

9. Process engineering flow diagrams

10. Installed radiation detection and alarm systems.

- Objective - The purpose of this requirement is to control design and system modifications to assure continuing safe operation.

- Requirement - Modifications to applicable aging-waste facility components and systems shall be reviewed and approved by responsible operating management, safety organizations and Quality Assurance before being implemented.

  Modifications judged to represent an unreviewed safety question as defined by DOE Order 5480.1A[14], page V-4 or to involve a change to the requirements contained in this document shall be the subject of a supplement or revision to this OSR chapter, which shall be approved per RHO-MA-100[15] and by DOE prior to implementation.

- Basis - Requirements for review and approval of modifications to systems and equipment are defined by DOE Order 5480.1A.[14]

- Recovery - If this requirement is violated, the affected operations or systems that can be safely shut down shall be halted immediately or curtailed as appropriate. The Director of Health, Safety and Environment (HS&E), the Manager of TFS&O, and the Program Manager shall be notified immediately. The modification shall be reviewed and evaluated for safety. Affected operations shall remain shut down or be subject to increased surveillance as appropriate until the modification is covered by properly approved safety documentation.

- Audit Point - Design changes are reviewed per the Engineering Procedures Manual, RHO-MA-115.

11.6 ADMINISTRATIVE CONTROLS

This section defines requirements for administrative actions: OSR violations, abnormal operations, unusual occurrences, etc.

11.6.1 Operating Procedures

- Applicability - This requirement applies to all operations of the 241-AY and 241-AZ aging-waste facilities.

- Objective - The purpose of this requirement is to provide controlled operating procedures to assure continued safe operations.

9 2 1 2 5 6 2 1 3 2 6

- Requirement - Research and Engineering (R&E) shall prepare, release, control and maintain operating procedures. Procedure approvals shall include the following (or equivalent if organizational titles or assignments are changed):

  1. Tank Farm and Evaporator Process Control

  2. Production Operations

  3. Quality Assurance

  4. Health, Safety and Environment.

  Revisions to operating procedures shall receive the same formal approvals as new procedures.

- Basis - The requirement for operating procedures is defined by DOE Order 5480.1A.[14]

- Recovery - If this requirement is violated, affected operations that can be safely shut down shall be immediately halted or curtailed as appropriate. Affected operations that cannot be safely shut down shall be subject to increased surveillance. The shift manager shall immediately notify the managers of TFS&O and TF&EPC. When a formally approved procedure is in place, normal operations may resume with the concurrence of the above management.

- Audit Point - Operation procedures are reviewed and issued per the Engineering Procedures Manual, RHO-MA-115.

11.6.2 Radiation Work Procedures

- Applicability - This requirement applies to all activities involving operation of the 241-AY and 241-AZ aging-waste facilities.

- Objective - The purpose of this requirement is to assure that all work involving exposure to radioactive materials or radiation is conducted in a safe manner.

- Requirement - All work involving exposure to radioactive materials or radiation shall be performed according to a Radiation Work Permit (RWP). The RWP shall be approved by the manager of Radiological Protection and by the manager of TFS&O prior to conducting operations covered by the RWP.

  Each of the above managers may delegate authority to approve the RWP.

- Basis - Radiation Work Procedures are administrative controls on operations involving radioactive materials or radiation, imposed to maximize safety. Provisions in the RWP for personnel protection specify applicability, types and levels of radioactive material or radiation to be encountered, and safety apparel to be worn.

- Recovery - If this requirement is violated, affected operations that can be safely shut down shall be halted immediately. Operations that cannot be safely shut down shall be conducted according to the direction of the managers of TFS&O and Radiological Protection. A properly approved RWP shall be in place before normal operations are restored.

- Audit Point - Radiation Work Permits are reviewed and issued per Radiological Standards and Operation Controls RHO-MA-220, Rev. 1.[19] They are maintained by Radiation Monitoring and compiled in RHO-MA-172.

9212562132 4

11.6.3 Trained Personnel

- Applicability - This requirement applies to all personnel conducting operations involving the 241-AY and 241-AZ aging-waste facilities.

- Objective - The purpose of this requirement is to provide training of personnel to maximize the safety of continuing operations.

- Requirement - Employees shall be provided with a basic understanding of the process and system design, system operations, emergency procedures for response to emergency conditions, radiation area safety and industrial safety.

- Basis - DOE Order 5480.1A[2] requires that critical tasks be performed by formally trained and qualified personnel.

- Recovery - If this requirement is violated, the responsible area manager shall either discontinue the affected activity or assure that a properly trained and qualified employee is present.

- Audit Point - Operations training programs are administered by the Production Operations Training Group, per RHO-MA-122, Organization and Procedures Manual.

  Process Control Engineers are certified by the Process Engineering Department as defined by SD-RE-TR-001, Process Control Engineer Training and Certification Program.

11.6.4 Audits

- Applicability - This requirement applies to the periodic appraisals, reviews and audits of operations involving the 241-AY and 241-AZ aging-waste facilities.

- Objective - The purpose of this requirement is to define independent reviews, consultations and audits concerning safety matters, programs and practices in order to maximize the safety of continuing operations.

- Requirement - The Joint Audit Team shall be responsible for performing an annual audit of the operations of the aging-waste facilities in order to verify compliance with the OSR contained in this document.

  The Process Control Department shall be responsible for performing appraisals and reviews of these OSR every 2 years to verify applicability and technical accuracy.

- Basis - Internal and independent third party audits, reviews and inspections are required to comply with DOE Order 5480.1A[2] and ERDA Manual Chapter 4204[16] requirements.

  The safety committees have the responsibility to review the SAR and its supporting documentation. Day to day radiation monitoring is provided by Radiological Protection.

- Recovery - If audits are not performed as specified in the requirement, HS&E shall be immediately notified. The Director of HS&E shall determine a suitable recovery based on the nature of the violation. This recovery shall include measures to prevent similar violations.

- Audit Point - Audits are performed per RHO-MA-100, Policy Manual.

11.6.5 Unusual Events

- Applicability - This requirement applies to unusual events during operation of the 241-AY and 241-AZ aging-waste facilities.

- Objective - The purpose of this requirement is to assure that significant occurrences and unusual events of a safety or technical nature are adequately identified and reported in order to improve the safety of continuing operations.

- Requirement - If operations occur outside the bounds of this OSR, including specified recovery from violations, operations shall be halted, curtailed or monitored as appropriate. Rockwell management shall be notified promptly of the violations and shall notify DOE-RL. An investigation and complete analysis of the

circumstances leading to and resulting from any violation shall be made. Actions to prevent recurrence of the violation shall be recommended and formally reported to DOE-RL.

In the event of other unusual or unplanned events as defined by Accident Prevention Standards, RHO-MA-221[17], actions taken shall be those specified in that manual.

Notification shall be per established Rockwell and DOE-RL procedures for the following interfaces:

1. The area manager shall be promptly notified and will notify the managers of TFS&O, TF&EPC, Radiological Protection, and the Program Manager.

2. Reporting to DOE-RL shall be according to established procedures in RHO-MA-221[17] and DOE Order 5484.2.[18]

- Basis - Unusual Occurrence Reports provide a format for accident investigations. They also provide a method for rapid exchange of information with functional and program groups so that steps can be taken to prevent similar events in the future. Action levels, investigating and reporting requirements are established. DOE Order 5484.2[14] defines the Unusual Occurrence Reporting System.

- Recovery - This section is not applicable.

- Audit Point - The Unusual Occurrence Reporting system is defined by RHO-MA-221.

11.7 REFERENCES

1. RHO-MA-115, February 1982, Engineering Procedures Manual, Engineering Management Systems staff, Rockwell Hanford Operations, Richland, Washington.

2. DOE Order 5480.1A, August 1981, Environmental Protection, Safety, and Health Protection Program for DOE Operations, Chapter XI, 'Requirements for Radiation Protection,' U.S. Department of Energy, Washington, D.C.

3. RHO-MA-139, June 1981, Environmental Protection Manual, G. F. Boothe and D. L. Uhl, Rockwell Hanford Operations, Richland Washington.

4. HWS-7789, May 1968, Specification for Primary and Secondary Steel Tanks - PUREX Tank Farm Expansion Project IAP-614, Hanford Engineering Services, Vitro Corp., Richland, Washington.

5. HWS-8982, September 1970, Specifications for Primary and Secondary Steel Tanks - Project HAP-647 Tank Farm Expansion - 241-AZ Tank Farm, Hanford Engineering Services, Vitro Corp., Richland, Washington.

6. DOE-RL Order 5820.2, July 1979, Radioactive Waste Management, U.S. Department of Energy, Richland Operations, Richland, Washington.

7. CPS-T-149-00010, January 26, 1981, Criticality Prevention Specification - Waste Storage Tanks and Associated Equipment, W. A. Blykert, Rockwell Hanford Operations, Richland Washington.

8. RHO-MA-136, July 1978, Nuclear Criticality Safety Standards, Criticality Engineering and Analysis Group staff, Rockwell Hanford Operations, Richland, Washington.

9. HW-39432, December 1955, Operational Characteristics of Submerged Gas-Lift Circulators, M. W. Cook and E. D. Waters, General Electric Company, Richland, Washington.

10. Internal letter #65411-83-017, dated January 28, 1983, Additional Sludge Height Limitations and Suggested Down Time for Air-Lift Circulators, M. I. Fineman and D. C. Riley, Rockwell Hanford Operations, Richland, Washington.

11. FATE-83-109, April 1983, Sediment Settling and Resuspension in Waste Storage Tanks with Air Injection Circulators, L. L. Eyler, Pacific Northwest Laboratory, Richland, Washington.

12. ERDA-1538, December 1975, Final Environmental Statement - Waste Management Operations - Hanford Reservation, Volume 1, U.S. Energy Research and Development Administration, Washington, D.C.

13. Letter, March 15, 1983, J. R. Divine, Pacific Northwest Laboratory, to M. R. Fox, Rockwell Hanford Operations, "Future PUREX Corrosion Test - 12 Month Evaluation".

14. DOE Order 5480.1A, August 1981, Environmental Protection, Safety, and Health Protection Program for DOE Operations, Chapter V, 'Safety of Nuclear Facilities,' U.S. Department of Energy, Washington, D.C.

15. RHO-MA-100, July 1977, Policies, PM HE 16-201, D. J. Cockeram and P. J. Fritch, Rockwell Hanford Operations, Richland, Washington.

16. ERDA Safety Manual, February 1974, Chapter 4024, "Contractor Training and Manpower Development", Energy Research and Development Agency, Washington, D.C.

9 2 1 2 5 6 2 1 3 2 1

17. RHO-MA-221, March 1979, Accident Prevention Standards, "Number 32," Industrial Hygiene and Safety staff, Rockwell Hanford Operations, Richland, Washington.

18. DOE Order 5484.2, August 1981, Unusual Occurrence Reporting System, U.S. Department of Energy, Washington, D.C.

19. RHO-MA-220, Rev. 1, February 1983, Radiological Standards and Operational Controls, Radiological Engineering Staff, Rockwell Hanford Operations, Richland, Washington.

LEFT BLANK INTENTIONALLY

9 2 1 2 5 6 2 1 3 1 9

12.0 QUALITY ASSURANCE

The Quality Assurance (QA) Program for transfer of high heat generating aging-waste from PUREX to AY and AZ tanks is based on the criteria of ANSI/ASME NQA-1C-1982,(1) as endorsed by DOE RL Order 5700.1, Quality Assurance.(2)

This program identifies the requirements and the responsibilities to provide adequate assurance that systems are operated in a manner that offers optimum safety and reliability. The transfer of aging-waste from PUREX to AY and AZ tanks is a Designated Program. Quality Assurance Laboratory personnel will sample and analyze the waste before it is released to the tank farms. Tank farm Quality Control (QC) personnel will verify the route to be used from the transfer point outside of PUREX to 241-AX Diversion Pit. The waste will then be transferred to the designated tank.

12.1 ORGANIZATION

The Rockwell Hanford Operations (Rockwell) Policies manual, RHO-MA-100,(3) describes the organizations, including the QA organization, along with their respective charters. These policies identify Function responsibilities, lines of communication, and interface between these organizations for activities that affect quality and safety.

12.2 QUALITY ASSURANCE PROGRAM

Quality Assurance program plans (QAPP) are prepared and issued under the authority of the Rockwell QA Director. The QAPP identifies the planned actions necessary to provide adequate confidence that facilities and administrative controls are in place for designated programs and special support activities. Rockwell manuals and plans that will be used to support this program plan are RHO-MA-150,(4) RHO-MA-138,(5) and RHO-CD-1132.(6)

12.2.1 Level of Quality

Rockwell quality and safety objectives are scoped within program plans and designated government regulations. Rockwell Functions individually address their responsibilities to those objectives.

Research and Engineering (R&E) initiates the original QA action by assuring that quality elements are clearly identified within design documents and associated administrative control.

Health, Safety and Environment (HS&E) groups develop radiological controls and industrial safety requirements in the facility design phase, and monitor the effectiveness of implemented controls during the facility operations.

Quality Assurance (QA) groups prepare, implement, and maintain quality verification programs in sufficient detail to assure each objective is achieved.

12.2.2 Personnel Training

Personnel orientation training and qualification programs are conducted in accordance with Rockwell policies defined in RHO-MA-100.[3] As a minimum, personnel designated to perform operations in radiation areas, and those observing in close proximity, are required to attend courses in radiological control and radiation exposure protection. Quality Control personnel are trained in nondestructive examinations and are certified by the designated Level III examiner in accordance with Rockwell Manual RHO-MA-106.[7]

Quality Assurance laboratory personnel are trained in basic laboratory methods and are qualified on the job in each dicipline by senior laboratory personnel in accordance with Laboratory Administration Procedures in Manual RHO-MA-138.[5]

12.2.3 Design Control

The Engineering Procedures Manual, RHO-MA-115[8], identifies specific procedures that are part of an effective design control system. These procedures establish interfaces between organizations concerned with the design to assure that safety and quality aspects are properly applied.

Design verification is conducted as the design of the facility, the associated components, or support equipment is established or modified. The QA Function, along with other Functions, participates in all formal design verification reviews. Design verification is made by consensus agreement.

Engineering maintains a design change system to assure that the same level of review is provided design changes as was afforded the original document.

12.2.4 Procedures and Instructions

Procedures and instructions are prepared and issued in support of activities affecting quality and safety. Functional procedures and instructions generated by Process Engineering to accomplish work tasks that interfaces with QA laboratory activities are submitted to the cognizant Quality Engineer for review.

12.2.5 Inspection and Test Control

The level of QA effort for onsite operations is in concert with requirements by design media. Design criteria are translated by Quality Engineering into specific inspectable characteristics for QC verification of the requirements specified by engineering documentation and procedures. Instructions are prepared using the following criteria:

- The verification of such characteristics shall be made at the earliest practical point in the work sequence.
- The inspection method choosen shall yield results consistent with relative significance of the characteristic.
- Instructions shall be prepared in a manner which will minimize the potential for error during the inspection process.
- Safety measures applied shall be commensurate with the potential impact on personnel and environmental safety.

12.2.6 Calibration and Control

Instruments, test equipment, and working standards are calibrated to recognized national standards. Instruments in use, other than those designated for indication only, and test equipment shall have valid evidence of a current calibration.

12.2.7 Nonconformance, Corrective Action, and Surveillance

Nonconforming conditions noted by QA personnel during equipment or material acceptance reviews or tests are reported as specified in the QA manuals, RHO-MA-150[4] and RHO-MA-256.[9]

Deviations found that require corrective action beyond the scope of disposition of the nonconformance be taken to prevent recurrence are documented as "Corrective Action Requests." These are generated by the individual recognizing the need, coordinated by Quality Engineering, and responded to by responsible management.

Quality Engineering personnel shall prepare plans and schedules for surveillance. All scheduled surveillance shall be performed by QC personnel. Infractions noted during surveillance activity are reported to the appropriate management authority for action. Repetitive infractions are, as well, reported on Corrective Action Requests.

12.3 QUALITY ASSURANCE LABORATORY

Operational functions in the PUREX QA laboratory are performed by trained and qualified QA laboratory technicians under the supervision of senior personnel.

Health, Safety and Environment conducts periodic appraisals to assure compliance with safety requirements. In addition, an annual QA audit is performed to confirm overall compliance with QA administrative requirements.

12.4 REFERENCES

1. ANSI-ASME NQA-1-1982, Quality Assurance Program Requirements for Nuclear Power Plants, American National Standards Institute/American Society of Mechanical Engineers, New York, New York,

2. DOE-RL Order 5700.1A, July 1983, Quality Assurance, U.S. Department of Energy, Richland, Washington.

3. RHO-MA-100, June 1983, Policies, D. J. Cockeram, Rockwell Hanford Operations, Richland, Washington.

4. RHO-MA-150, August 1983, Quality Assurance Manual, R. D. Hammond, Rockwell Hanford Operations, Richland, Washington.

5. RHO-MA-138, May 1982, Analytical Laboratories Operation Instruction Manual, C. P. Sutter, Rockwell Hanford Operations, Richland, Washington.

6. RHO-CD-1132, April 1981, Quality Assurance Program Plan - Waste Concentration in Single-Shell Tanks, Isolation/Stabilization (Tank Farms), E. F. Serabia, Rockwell Hanford Operations, Richland, Washington.

7. RHO-MA-106, February 1981, NDE Special Process Procedures Manual, Rockwell Hanford Operations, Richland, Washington.

8. RHO-MA-115, June 1983, Engineering Procedures Manual, Engineering Management Systems staff, Rockwell Hanford Operations, Richland, Washington.

9. RHO-MA-256, August 1983, Quality Assurance Instruction Manual, Rockwell Hanford Operations, Richland, Washington.