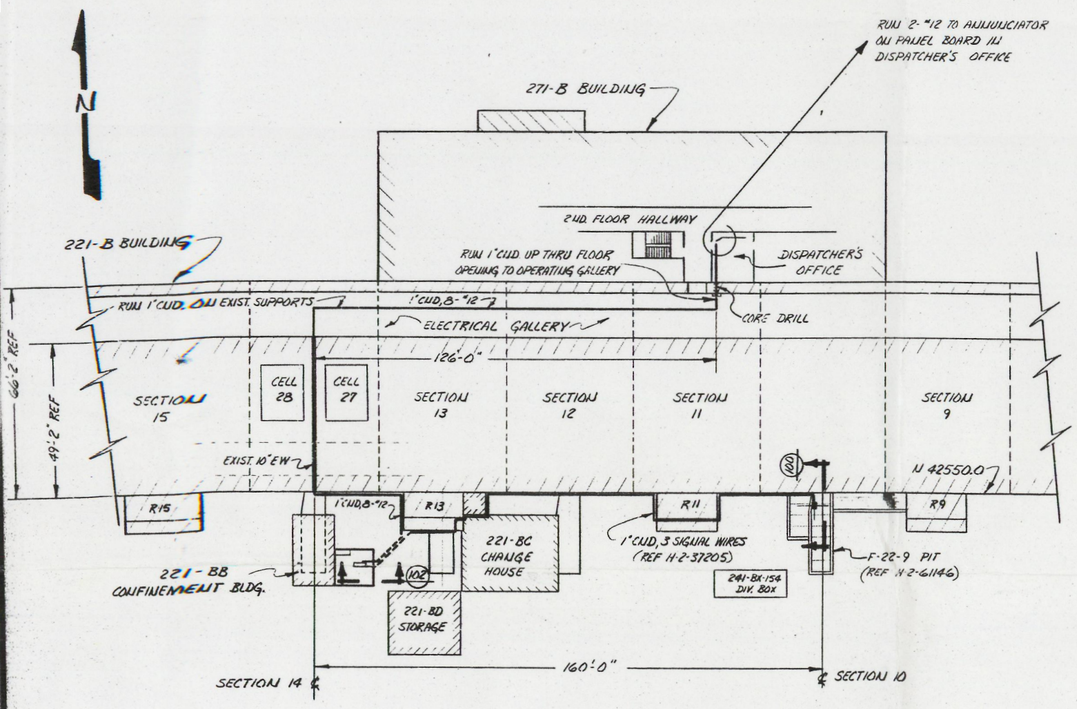

PLAN

SCALE: 1" = 20'-0"

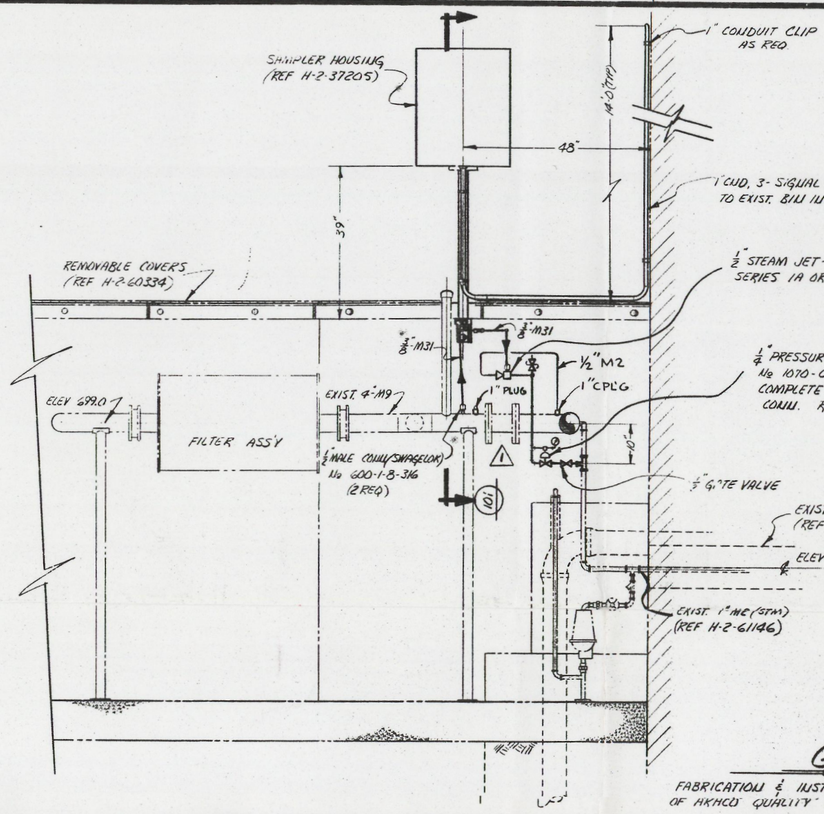

(100) SECTION

SCALE: 3/4" = 1'-0"

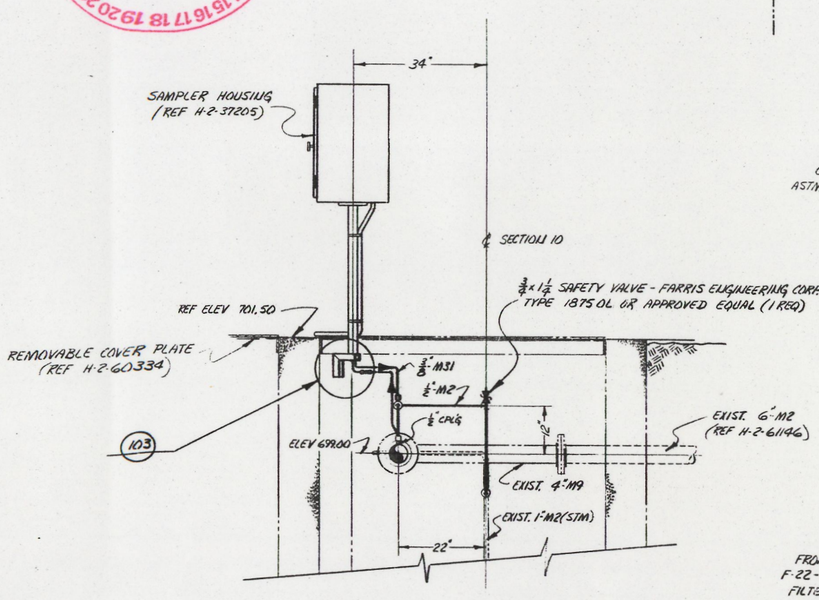

(101) SECTION

SCALE: 3/4" = 1'-0"

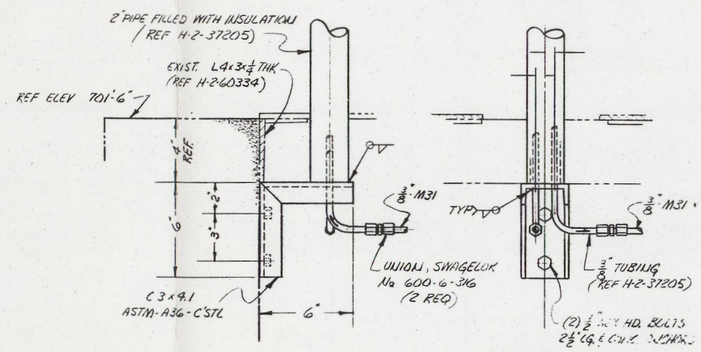

(103) DETAIL

SCALE: 3" = 1'-0"

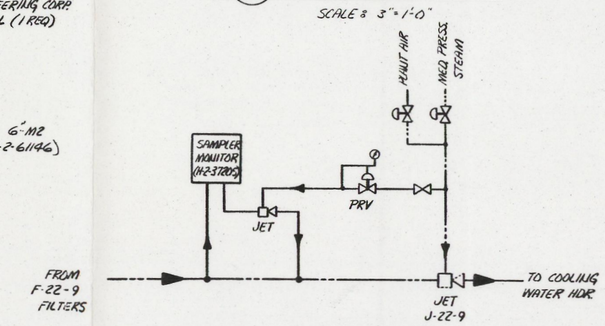

FLOW DIAGRAM

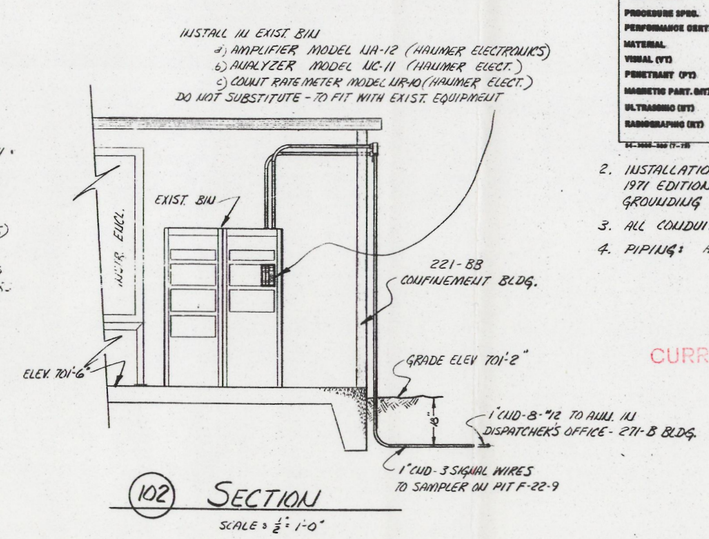

(102) SECTION

SCALE: 1/2" = 1'-0"

GENERAL NOTES:

FABRICATION & INSTALLATION SHALL COMPLY WITH THE REQUIREMENTS OF AKHCO QUALITY ASSURANCE LEVEL III & THE FOLLOWING:

1. WELDING:

☒ NFG-320-W	WELDING FABRICATION REQUIREMENTS			☐ NFG-320-W	OTHER REQ'TS
WELD PROCESS	☐ GTAW	☐ GMAW	☐ SMAW	☐ SELLER'S OPTION	
PROCEDURE SPEC.	☐ ASME SEC. IX	☐ ANSI-B31.1	☐ NFG-320-W		
PERFORMANCE QUAL.	☐ ASME SEC. IX	☐ ANSI-B31.1	☐ NFG-320-W		
MATERIAL	☐ ASME SEC. II	☐ ANSI B31.1.0	☐ NFG-320-W		
VISUAL (VT)	☐ ASME SEC. V	☒ NFG-320-W	☐ NFG-320-W	☐ NFG-320-W	
PENETRANT (PT)	☐ ASME SEC. III	☐ ASME SEC. V	☐ ASME SEC. VIII		
MAGNETIC PART. (MT)	☐ ASME SEC. III	☐ ASME SEC. V	☐ ASME SEC. VIII		
ULTRASONIC (UT)	☐ ASME SEC. V	☐ ASME SEC. VIII	☐ ANSI-B31.1		
RADIOGRAPHY (RT)	☐ ASME SEC. III	☐ ASME SEC. V	☐ ASME SEC. VIII		

2. INSTALLATION SHALL COMPLY WITH THE REQUIREMENTS OF THE 1971 EDITION OF THE NATIONAL ELECTRICAL CODE. INSTALL GROUNDING PER HANFORD STD. E-12-1 & E-3-2.
3. ALL CONDUIT SHALL BE RIGID GALVANIZED STEEL.
4. PIPING: H-2-31750 SHT 2 & H-2-31750 SHT 31.

0031034

CAUTION
NOT COMPLETE WITHOUT
CURRENT STATUS OF OUTSTANDING
ECNS FROM DATA BASE

MAR 24 1993

SEP 1993
RECEIVED
EDMC

REVISIONS			
1	ZONE 4F (FCN-05291) REROUTED SAMPLE RTN.		

U. S. ATOMIC ENERGY COMMISSION
RICHLAND OPERATIONS OFFICE
Atlantic Richfield Hanford Company
Richland, Washington 99352

SAMPLER ARRANGEMENT
VESSEL VENT #2

221-B | 5900, 7301 & 8500 | H-2-37206

NOTED | NONE

REFERENCE DRAWINGS | NEXT USED ON | DRAWING STATUS 5102

START

0031034

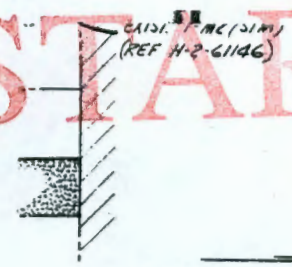

GENERAL NOTES:

FABRICATION & INSTALLATION SHALL COMPLY WITH THE REQUIREMENTS OF ARHCO QUALITY ASSURANCE LEVEL III & THE FOLLOWING:

1. WELDING:

☒ [illegible]	WELDING FABRICATION REQUIREMENTS			☐ [illegible]	OTHER REQ'S
WELD PROCESS	☐ [illegible]	☐ [illegible]	☐ [illegible]	☐ SELLER'S OPTION	
PROCEDURE SPEC.	☐ ASME SEC. IX	☐ [illegible]	☐ [illegible]		
PERFORMANCE CERT.	☐ ASME SEC. IX	☐ [illegible]	☐ [illegible]		
MATERIAL	☐ ASME SEC. II	☐ [illegible]	☐ [illegible]		
VISUAL (VT)	☐ ASME SEC. V	☒ [illegible]	☐ [illegible]	☐ [illegible]	
PENETRANT (PT)	☐ ASME SEC. III	☐ ASME SEC. V	☐ ASME SEC. VIII		
MAGNETIC PART. (MT)	☐ ASME SEC. III	☐ ASME SEC. V	☐ ASME SEC. VIII		
ULTRASONIC (UT)	☐ ASME SEC. V	☐ ASME SEC. VIII	☐ [illegible]		
RADIOGRAPHIC (RT)	☐ ASME SEC. III	☐ ASME SEC. V	☐ ASME SEC. VIII		

2. INSTALLATION SHALL COMPLY WITH THE REQUIREMENTS OF THE 1971 EDITION OF THE NATIONAL ELECTRICAL CODE. INSTALL GROUNDING PER HANFORD STD. E-12-1 & E-3-2.
3. ALL CONDUIT SHALL BE RIGID GALVANIZED STEEL.
4. PIPING: H-2-31750 SHT 2 & H-2-31750 SHT 31.

CAUTION

NOT [illegible] WITHOUT

CUR[illegible] STANDING

[illegible]ECTRONICS)
[illegible]ELECT.)
[illegible] ELECT.)
[illegible]ENT

[illegible]IT BLDG.

[illegible] 701'-2"

[illegible]-1" CND-8-#12 TO ANN. IN
DISPATCHER'S OFFICE - 271-B BLDG.

[illegible]AL WIRES
[illegible] PIT F-22-9

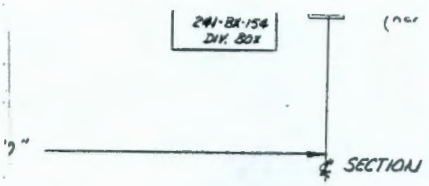

2" PIPE FIL[illegible]
/ REF

REF ELEV 701'-6"

C 3
ASTM-A

[illegible]AFETY VALVE - FARRIS ENGINEERING CORP.
[illegible]875 OL OR APPROVED EQUAL (1 REQ)

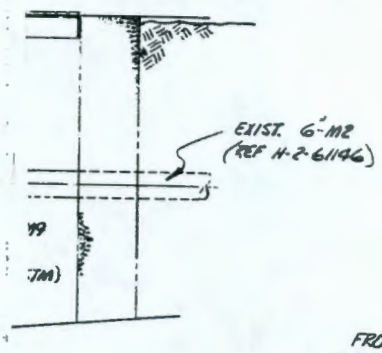

FROM
F-22-9
FILTERS

[illegible]E 4F (FCN-05291) [illegible]COUTED SAMPLE RTN.	1	
DESCRIPTION		
[illegible]		
[illegible] PRY ISSUE NO. 5102	1	

U. S. ATOMIC ENERGY COMMISSION
RICHLAND OPERATIONS OFFICE
Atlantic Richfield Hanford Company
Richland, Washington 99352

SAMPLER ARRANGEMENT

VESSEL VENT #2

221-B | 5900, 7301 & 8500

NONE | H-2-37206 | ~ | ~

3 2 1 10