0076052

Columbia River Component of the River Corridor Baseline Risk Assessment Project

Workshop to Initiate Collection and Evaluation of Existing Data On Hanford Site Releases to the Columbia River
December 13-14, 2004

RECEIVED
FEB 06 2008
EDMC

Workshop Notes

I. Overview

The initial task of the Columbia River Component of the River Corridor Baseline Risk Assessment will be to compile, review, and evaluate existing information on contaminated releases from the Hanford Site into the river.

The objectives of this two-day workshop, which were accomplished, were to:

- Discuss and get input on the vision, purpose, and values that will guide this task of the risk assessment project.
- Present and get input on the task's goals and overall timeline
- Provide perspective by describing past studies of Hanford Site impacts to the river
- Define and get input on the scope of the task
- Describe and get input on project management responsibilities
- Obtain the views and advice of stakeholders and task subcontractors about data collection, data use, and processing and format issues.

II. Recurring themes expressed by workshop participants

- The task needs open communications; in particular, inclusion of Native American Communities and communication across the normal lines among contractors and stakeholders
- Don't rely entirely on a website to communicate task status
- Data redundancy is acceptable at this early stage of the task
- Data collection guidelines need to be developed
- It is important to look at all the data that will help distinguish between Hanford and non-Hanford sources of contamination

- Lateral boundaries for the data collection effort need to be defined, including upstream boundaries of the major tributary rivers
- CERCLA requirements will be the driver for the direction and scope of the risk assessment

III. Recurring themes expressed by the Environmental Restoration Contractor (ERC) [project manager for this risk assessment]

- The risk assessment will be no better than the data collected
- The data will determine the extent of the investigation
- The end point of the task is to have a set of data that the public trusts
- Our focus is on the Columbia River and Hanford Site releases that may have potentially affected it
- We want to build teams to complete this task and to take advantage of the talents of the next generation of young scientists at the regional universities
- We will stay focused on the task's scope, schedule, and budget
- We don't have all the answers and that is why we are doing this workshop and being inclusive in our approach

IV. ERC decisions and clarifications during the workshop

- We will not use a steering committee for this task
- All data will be gathered and evaluated/priority on "getting the data"
- The downstream boundary of the task will remain flexible and will be determined by evaluating the data
- We will rely on what is found in the field to establish a marker system for lateral boundaries
- If the data need is within CERCLA requirements, then it needs to be collected
- Contaminants of potential concern will be evaluated within the DQP process prior to exclusion
- The task includes all Hanford releases into the river, regardless of source

V. Agreements on the Working Group

- Major responsibilities: identify data sources and gather data

- Will meet at least three times
- The core members will consist of the five subcontractors with guidance from the ERC risk assessment team
- All other workshop participants will be invited to meetings of the Working Group
- The core members' expectation is that other participants in the Working Group meetings will offer technical assistance and will not bring up policy or political issues
- Technical assistance will include but not be limited to: missing data sources, where the data can be found, relevant pathways and sources, input regarding useful data
- The Working Group will stay open on technical issues but will keep focused on its major responsibilities

VI. Additional data sources suggested during the workshop

- University theses and dissertations
- Ongoing communications, emails, conference calls, the risk assessment website
- DOE-affiliated universities
- Personal files

VII. Workshop Evaluation

Positives	Negatives
• Snacks • Open forum • Honesty/no pretense • Started at an early stage of the process • Web page idea • Balance between openness and structure • Facilitator skills	• Room too cold • TPA project managers not present • Core subcontractors needed earlier introduction • Subs should have been invited to discuss their concerns • Needed more time to connect the ERC project team with the subs • Too short a lead time on the invitations • Name cards would have helped • Tough learning curve • Needed better description of the task's context • Label handouts "working draft"

	• 8:00 am start on Monday too early

VIII. List of Parking Lot/Action Items recorded during the workshop

Parking Lot/Action Item
1. Identify the contaminants areas that have been dredged and disposal locations
2. Field map the task boundaries and make sure they comply with CERCLA
3. Look for all data that will help distinguish Hanford/non-Hanford sources
4. Develop guidance to define what tributaries require data collection and how far upstream
5. Develop data collection priority list
6. Evaluate the need to core sample behind the four downstream dams
7. Don't focus strictly on data to do a risk assessment, but collect data
8. Update the Communications Plan to include monthly meetings
9. Determine whether the Vanport area in Portland (1948 flood) needs to be within the geographical range of the task
10. Determine whether the tidal flats at the mouth of the Columbia River and adjacent to Willapa Bay need to be in the geographical range/whether Astoria is the appropriate place to end data collection
11. Decide what models will be used by the risk assessment and provide that information to the subcontractors
12. Respond to the concern that the risk assessment will ignore cumulative risks
13. Obtain from Dirk Dunning a list of production campaigns (and dates)
14. Create a chat room on the risk assessment website so that the subcontractors can share information
15. Establish a communication protocol for the subcontractors and the ERC; maximize opportunities for "rich" communication, including face-to-face meetings
16. Provide to the subcontractors a list of topics and uniform data formats
17. Create data criteria to distinguish between composite and discrete data
18. Create a field for text entry in the electronic data formats
19. Add additional biota descriptions in the data formats
20. Deal with "background data" and "blank subtraction" issues at the next workshop

Parking Lot/Action Item
21. Add "preservation status" and "hardness" (% solids, % lipids) information fields to the data formats
22. Determine how to accept "summary data" into the data sets
23. Develop ways to communicate in addition to the website
24. Define the boundaries of the each of the risk assessments and show how the ecosystems overlap
25. Work with Mike Thompson to get more information on the Configuration Management Group at DOE and its potential impacts on the risk assessment
26. Officially invite the Natural Resources Trustees to task meetings
27. Elevate communication with and involvement of the Tribes/Indian Nations within the task
28. Define the safeguards that will prevent redundancy of effort among the subcontractors
29. Identify points of contact at the ERC for different types of issues
30. Determine a way to identify data pedigrees to verify that the data is valid
31. Obtain from WDOH a list of points of contact for air data (Scott Vander Verst)
32. Develop a process for consistent data collection
33. Develop an overall template for data collection
34. Invite the TPA project managers to the next workshop (as they were invited to the first workshop)
35. Make sure that Tribal Nations cultural issues are dealt with appropriately
36. Describe the other risk assessments and the context for this risk assessment at the next workshop

IX. List of workshop participants

Name	Organization	Phone	Email
Susie Amundson	Kauffman & Associates	509-747-4994	susie@kauffmaninc.com
Bob Bryce	PNNL	509-373-3586	rw.bryce@pnl.gov
Chris Cearlock	CH2M HILL	509-372-9026	cscearloc@bhi-erc.com
Kevin Clarke	DOE-RL	509-376-6332	kevin_v_clarke@rl.gov
Roger Dirkes	PNNL	509-376-8177	rldirkes@pnl.gov
Dirk Dunning	Oregon DOE	503-378-3187	dirk.a.dunning@state.or.us
Rose Elisondo	Yakama Nation	509-945-3192	relisondo@yakama.com

Name	Organization	Phone	Email
Tom Fogwell	Fluor Hanford	509-373-3182	thomas_fogwell@rl.gov
Sheri Harshberger	Bechtel Hanford	509-372-9070	slharshb@bhi-erc.com
Kathryn Higley	Oregon State University	541-737-0675	kathryn.higley@oregonstate.edu
Dick Jaquish	WDOH	--	dick.jaquish@doh.wa.gov
Tom Keefe	Kauffman & Associates	509-947-4994	tom@kauffmaninc.com
Tim Lee	CH2M HILL	509-372-9143	talee@bhi-erc.om
Emily Loeb	Kauffman & Associates	509-747-4994	emily@kauffmaninc.com
Tom Marceau	Bechtel Hanford	509-372-9289	temarcea@bhi-erc.com
Jay McConnaughey	Yakama Nation	509-945-4797	j.mccon@verizon.net
Fred Mann	CH2M HILL	509-373-3978	frederick_m_mann@rl.gov
Terri Miley	PNNL	509-372-4388	terri.miley@pnl.gov
Donna Morgans	CH2M HILL	509-372-9247	dmorgans@ch2m.com
Ted Poston	PNNL	509-376-5696	ted.poston@pnl.gov
Mike Priddy	WDOH	509-727-5426	mike.priddy@doh.wa.gov
Callie Ridolfi	Ridolfi	206-682-7294	callie@ridolfi.com
Wade Riggsbee	Yakama Nation	509-943-5432	riggsbee@owt.com
John Sands	DOE-RL	509-372-2282	john_p_sands@rl.gov
Brad Sample	CH2M HILL	916-920-0300	bsample@ch2m.com
Gene Schreckhise	WSU/Tri-Cities	509-372-7323	gschreck@tricity.wsu.edu
John Stanfill	Nez Perce Tribe ERWM	208-843-7375 x2369	johns@nezperce.org
Mike Thompson	DOE-RL	509-373-0750	k_m_mike_thompson@rl.gov
Scott Van Verst	WDOH		scott.vanverst@doh.wa.gov
Dana Ward	DOE-RL	509-372-1261	dana_c_ward@rl.gov
Steve Weiss	Bechtel Hanford	509-372-9495	sgweiss@bhi-erc.com
Matthew Wiley	University of Washington	206-6161775	mwwiley@u.washington.edu
Dee Willis	Columbia Energy	509-947-4881	dwillis@columbia-energy.com
Jamie Zeisloft	DOE-RL	509-372-0188	jamie_zeisloft@rl.gov

X. Attachments (all were handouts or graphics in the workshop)

1. Conceptual River Corridor CERCLA Closure Process
2. FY 2005 Task Schedule
3. River Corridor Data Collection Process (conceptual)

4. Task Conditions/Criteria

5. Documentation and Reporting

6. Evaluation Criteria

7. Task Values

8. Map Showing Projected Study Areas of Each Subcontractor

ATTACHMENT 1
CONCEPTUAL RIVER CORRIDOR CERCLA CLOSURE PROCESS

Conceptual River Corridor CERCLA Closure Process

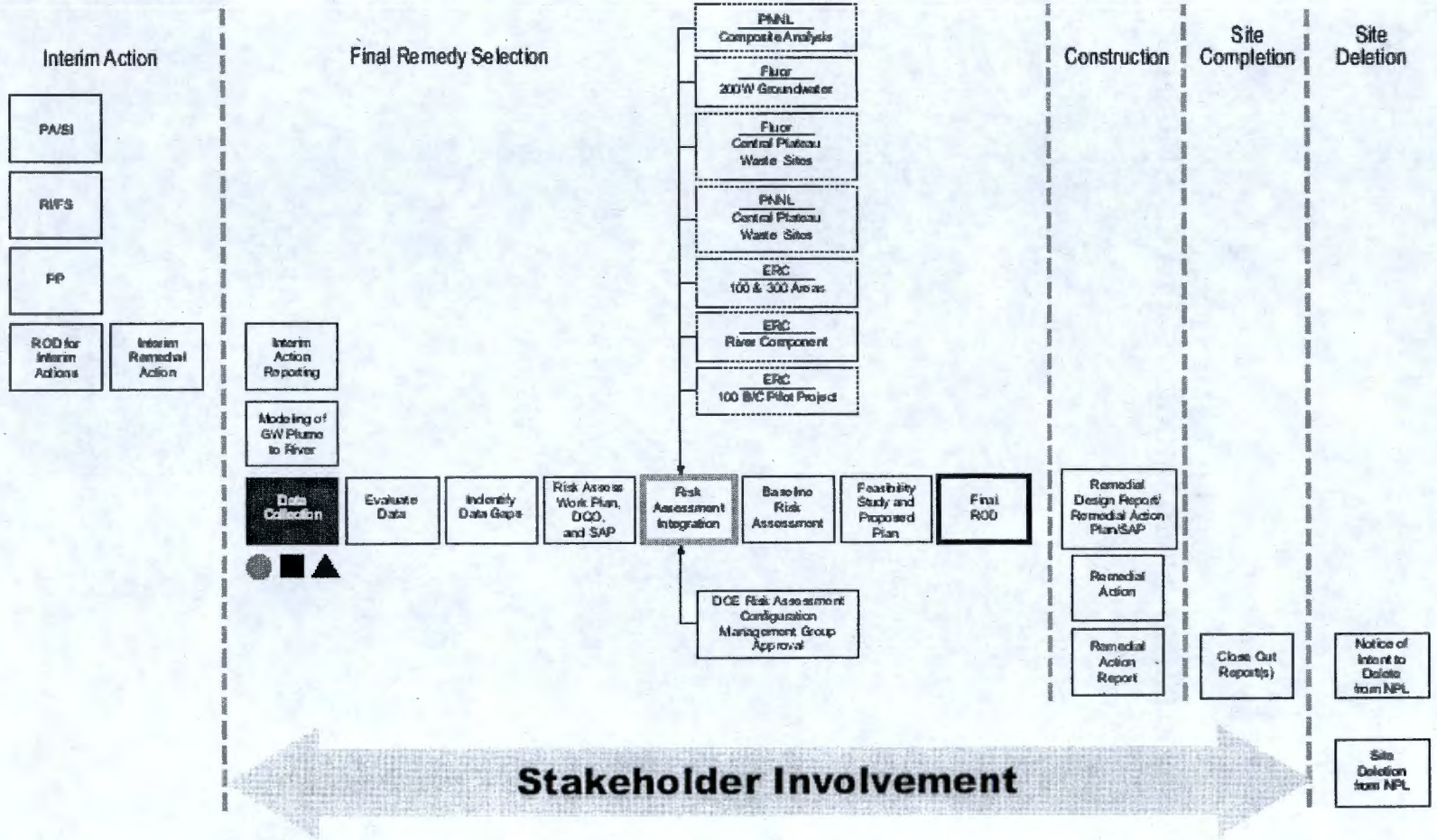

ATTACHMENT 2
FY 2005 TASK SCHEDULE

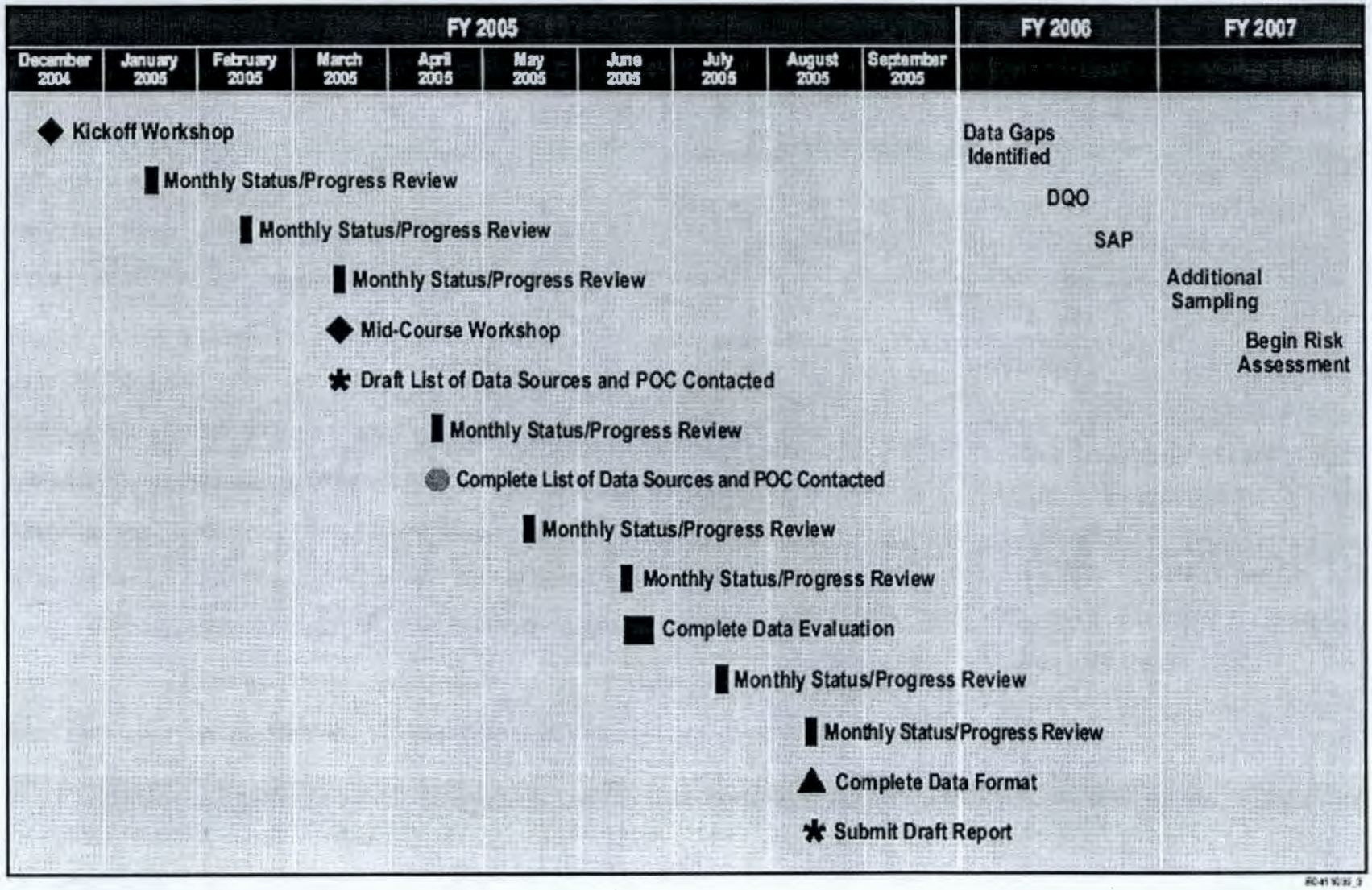
FY 2005
FY 2006
FY 2007
December 2004
January 2005
February 2005
March 2005
April 2005
May 2005
June 2005
July 2005
August 2005
September 2005
Kickoff Workshop
Monthly Status/Progress Review
Monthly Status/Progress Review
Monthly Status/Progress Review
Mid-Course Workshop
Draft List of Data Sources and POC Contacted
Monthly Status/Progress Review
Complete List of Data Sources and POC Contacted
Monthly Status/Progress Review
Monthly Status/Progress Review
Complete Data Evaluation
Monthly Status/Progress Review
Monthly Status/Progress Review
Complete Data Format
Submit Draft Report
Data Gaps Identified
DQO
SAP
Additional Sampling
Begin Risk Assessment

ATTACHMENT 3
RIVER CORRIDOR DATA COLLECTION PROCESS (CONCEPTUAL)

River Corridor Data Collection Process

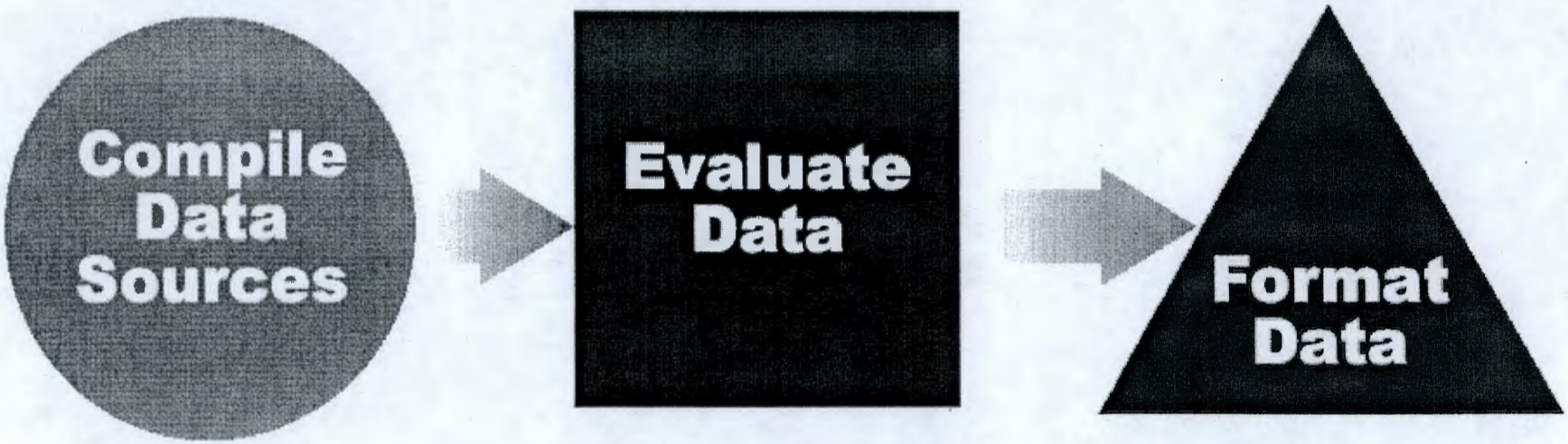

ATTACHMENT 4
TASK CONDITIONS/CRITERIA

Project Conditions/Criteria

- EPA–Approved CERCLA Risk Assessment
- Columbia River
- Current Conditions
- Hanford-Related Contaminants
- Acknowledge Previous Studies and Existing Data
- "Validated" Existing Data (Rigor)

ATTACHMENT 5
DOCUMENTATION AND REPORTING

Documentation & Reporting

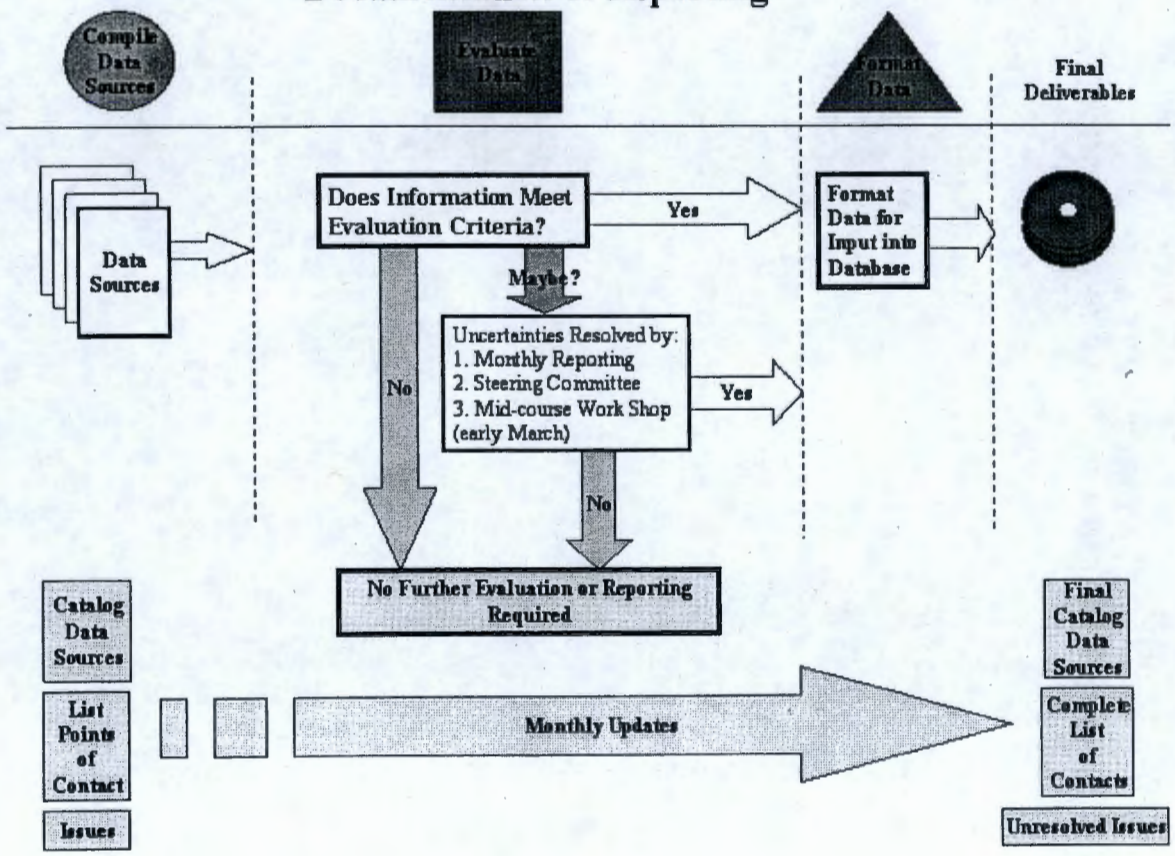

ATTACHMENT 6
EVALUATION CRITERIA

Evaluation Criteria

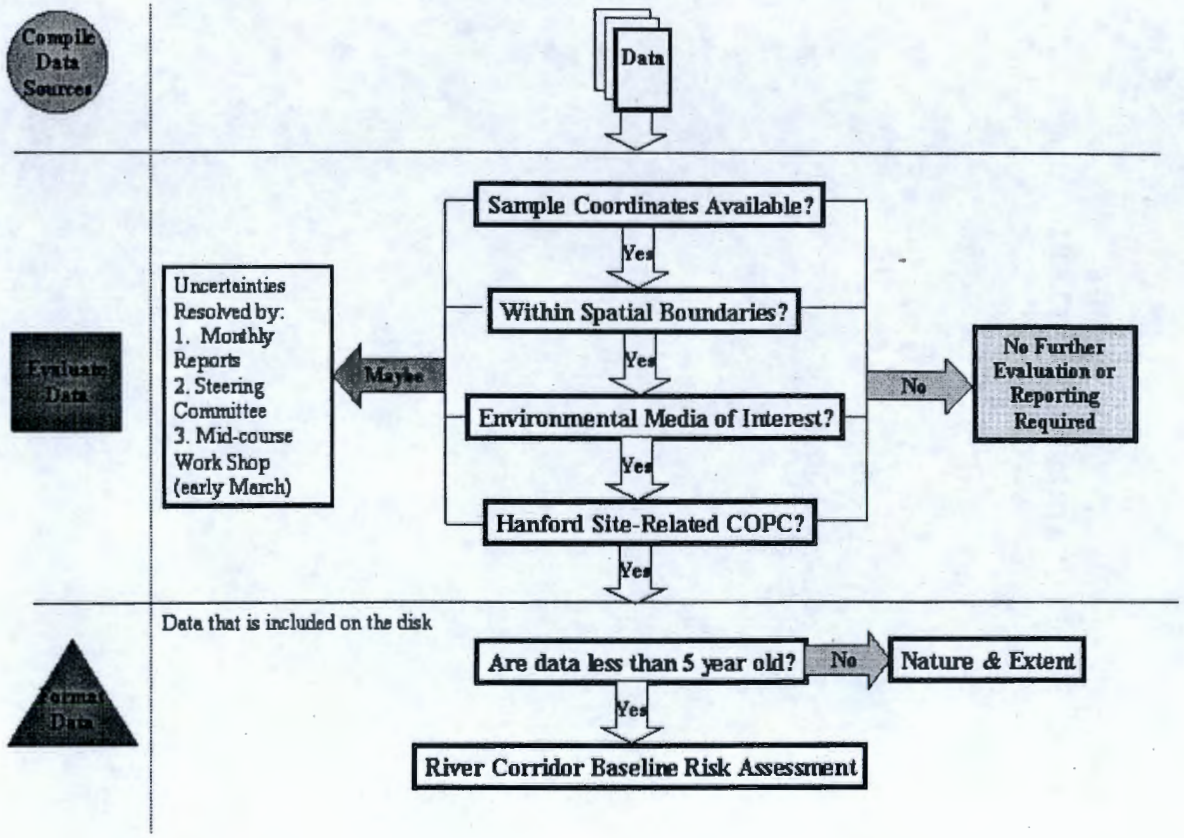

ATTACHMENT 7
TASK VALUES

Values

- Openness
- Clear/Understandable
- Inclusive
- Keep Moving and Meet Schedule (Use Parking Lot)
- Direct Communication (Effectively Resolve Issues and Disagreements)

ATTACHMENT 8
MAP SHOWING PROJECTED STUDY AREAS
OF EACH SUBCONTRACTOR

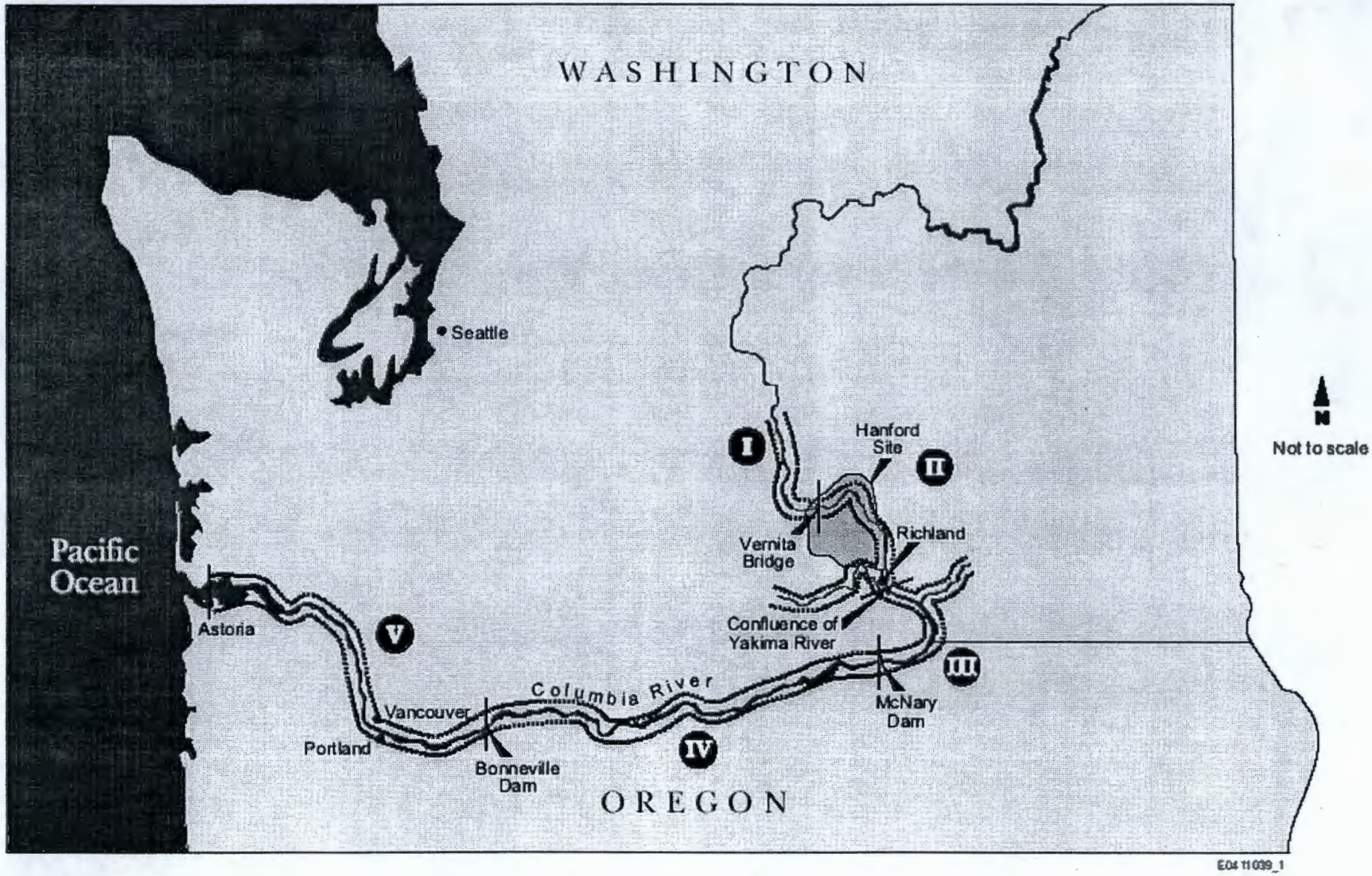
WASHINGTON
Seattle
Pacific Ocean
Astoria
Portland
Vancouver
Bonneville Dam
Columbia River
OREGON
Vernita Bridge
Hanford Site
Richland
Confluence of Yakima River
McNary Dam
I
II
III
IV
V
N
Not to scale
E041103 9_1

List of Parking Lot/Action Items recorded during the workshop

Parking Lot/Action Item	Response	Status
1. Identify the contaminants areas that have been dredged and disposal locations	Will be addressed during workshop presentation titled "CERCLA requirements and project boundaries".	
2. Field map the project boundaries and make sure they comply with CERCLA	Will be addressed during workshop presentation titled "CERCLA requirements and project boundaries"	
3. Look for all data that will help distinguish Hanford/non-Hanford sources	The subcontractors will perform this during the data collection and evaluation process. This process will continue to be defined and will also be addressed during the workshop presentation titled "Finalize Data Evaluation Process".	
4. Develop guidance to define what tributaries require data collection and how far upstream	As presented in the workshop on December 14, the major tributaries downstream of the Hanford Site consist of the Yakima, Snake, Walla Walla, Umatilla, Willow, John Day, Deschutes, Klickitat, Hood, White Samon, Sandy, Willamette, Lewis, Kalama, and Cowlitz. The intent of including these rivers is to determine what each is contributing to the Columbia River; however, information should be at a summary level, not a detailed listing. For example, paper mills on the Snake River contribution… If there is an existing monitoring station that provides information on water quality, that should be identified together with the date of the most recent sampling data event and results.	
5. Develop data collection priority list	This compilation effort will focus on existing data on Hanford-related contaminant releases to the Columbia River. To the extent that information on non-Hanford Site releases, environmental conditions, or environmental damages are encountered during the search, they will be captured.	

Parking Lot/Action Item	Response	Status
6. Evaluate the need to core sample behind the four downstream dams	This may be an outcome from the evaluation of gaps in the existing data and the resulting DQO process that will occur in FY06.	
7. Don't focus strictly on data to do a risk assessment, but collect all data	This compilation effort will focus on existing data on Hanford-related contaminant releases to the Columbia River. To the extent that information on non-Hanford Site releases, environmental conditions, or environmental damages are encountered during the search, they will be captured. However, the search will not specifically seek out this information.	
8. Update the project Communications Plan to include monthly meetings	The Communication Plans are posted on the project's Webpage.	
9. Determine whether the Vanport area in Portland (1948 flood) needs to be within the geographical range of the project	Will be addressed during workshop presentation titled "CERCLA requirements and project boundaries".	
10. Determine whether the tidal flats at the mouth of the Columbia River and adjacent to Willapa Bay need to be in the geographical range/whether Astoria is the appropriate place to end data collection	Will be addressed during workshop presentation titled "CERCLA requirements and project boundaries".	
11. Decide what models will be used by the project and provide that information to the subcontractors	The models that are used by the project for risk assessment are not predetermined. It will be decided during the DQO process (FY06).	
12. Respond to the concern that the project will ignore cumulative risks	The purpose of this task is to define the procedures that will be followed to compile data. However, the risk assessment for this component will address cumulative risks.	
13. Obtain from Dirk Dunning a list of production campaigns (and dates)	See handout.	

Parking Lot/Action Item	Response	Status
14. Create a chat room on the project website so that the subcontractors can share information	E-forum is set up at the Webpage. Also, there are monthly meetings, email, points of contact list, and other workshops to attend.	in process
15. Establish a communication protocol for the subcontractors and the ERC; maximize opportunities for "rich" communication, including face-to-face meetings	The subs & ERC met for ½ day on January 24 and plan to meet monthly or more often as needed for the duration of the task. Anyone with a concern or issue can contact Tom Marceau (372-9289 or temarcea@bhi-erc.com).	
16. Provide to the subcontractors a list of topics and uniform data formats	Will be addressed during workshop presentation titled "Data Entry Demonstration".	
17. Create data criteria to distinguish between composite and discrete data	Will be addressed during workshop presentation titled "Finalize Data Evaluation Demonstration".	
18. Create a field for text entry in the electronic data formats	Will be addressed during workshop presentation titled "Data Entry Demonstration".	
19. Add additional biota descriptions in the data formats	Additional biota descriptions will be included as fields in the database and will be addressed during the workshop presentation titled "Data Entry Process".	
20. Deal with "background data" and "blank subtraction" issues at the next workshop	This concern was directed toward the issue of laboratory performing blank subtraction (that is subtracting the results from preparation blanks from the environmental sample results). The purpose of this task is to compile data that could be used for CERCLA purposes. If blank subtraction is suspected, then data are not considered usable for risk assessment purposes but may be used for determining extent of contamination. metals	

Parking Lot/Action Item	Response	Status
21. Add "preservation status" and "hardness" (% solids, % lipids) information fields to the data formats	This information can be added as fields to the database during compilation and will be addressed during the workshop presentation titled "Finalize Data Evaluation Process".	
22. Determine how to accept "summary data" into the data sets	Summary data will primarily be captured in the bibliographical input page. However, specific data may also be entered and used to determine nature and extent if evaluation criteria have been met. It is unlikely that summary data alone would meet the requirements necessary for inclusion into the risk assessment.	
23. Develop ways to communicate in addition to the website	In addition to the E-forum set up at the Webpage, there are monthly meetings, email, points of contact list, and other workshops to attend.	
24. Define the boundaries of the each of the risk assessments and show how the ecosystems overlap	Will be addressed during workshop presentation titled "Risk Assessment Integration and the Configuration Management Group".	
25. Work with Mike Thompson to get more information on the Configuration Management Group at DOE and its potential impacts on the project	Will be addressed during workshop presentation titled "Risk Assessment Integration and the Configuration Management Group".	
26. Officially invite the Natural Resources Trustees to project meetings	The Natural Resources Trustees were invited to this project workshop.	

Parking Lot/Action Item	Response	Status
27. Elevate communication with and involvement of the Tribes/Indian Nations within the project	The Tribes will be invited to participate in the open review of the data as it is compiled and evaluated through the monthly meetings. More central to this concern, they also will be key participants in the DQO process and development of the SAP – the steps that will identify data gaps and the ways in which these gaps will be addressed. We understand that environmental issues are cultural issues from the Tribal perspective, and expect that each Tribe will participate in this project to ensure that their concerns are clearly identified.	
28. Define the safeguards that will prevent redundancy of effort among the subcontractors	At this stage in the process, redundancy of data is considered acceptable. Safeguards will be developed such as e-forum, direct phone calls, and monthly meetings to determine how to handle redundant data input.	
29. Identify points of contact at the ERC for different types of issues	See handout.	
30. Determine a way to identify data pedigrees to verify that the data is valid	Pedigree The pedigree of the analytical data will determine whether it can be used for risk assessment purposes or for determining the extent of contamination. This process will be addressed during the workshop presentation titled "Finalize Data Evaluation Process".	Ranked 1 Best 2 3 suspect
31. Obtain from WDOH a list of points of contact for air data (Scott Vander Verst)	Scott Vander Verst or Lynn Albin	
32. Develop a process for consistent data collection	Will be addressed during workshop presentation titled "Data Entry Demonstration".	
33. Develop an overall template for data collection	Will be addressed during workshop presentation titled "Data Entry Demonstration".	

Parking Lot/Action Item	Response	Status
34. Invite the TPA project managers to the next workshop (as they were invited to the first workshop)	The TPA project managers were invited to this workshop.	
35. Make sure that Tribal Nations cultural issues are dealt with appropriately	The Tribes will be invited to participate in the open review of the data as it is compiled and evaluated through participation in the monthly meetings. More central to this concern, they also will be key participants in the DQO process and development of the SAP – the steps that will identify data gaps and the ways in which these gaps will be addressed. We understand that environmental issues are cultural issues from the Tribal perspective, and expect that each Tribe will participate in this project to ensure that their concerns are clearly identified.	
36. Describe the other risk assessments and the context for this risk assessment at the next workshop	Will be addressed during workshop presentation titled "Risk Assessment Integration and the Configuration Management Group".	

Bibliographical Input Screen

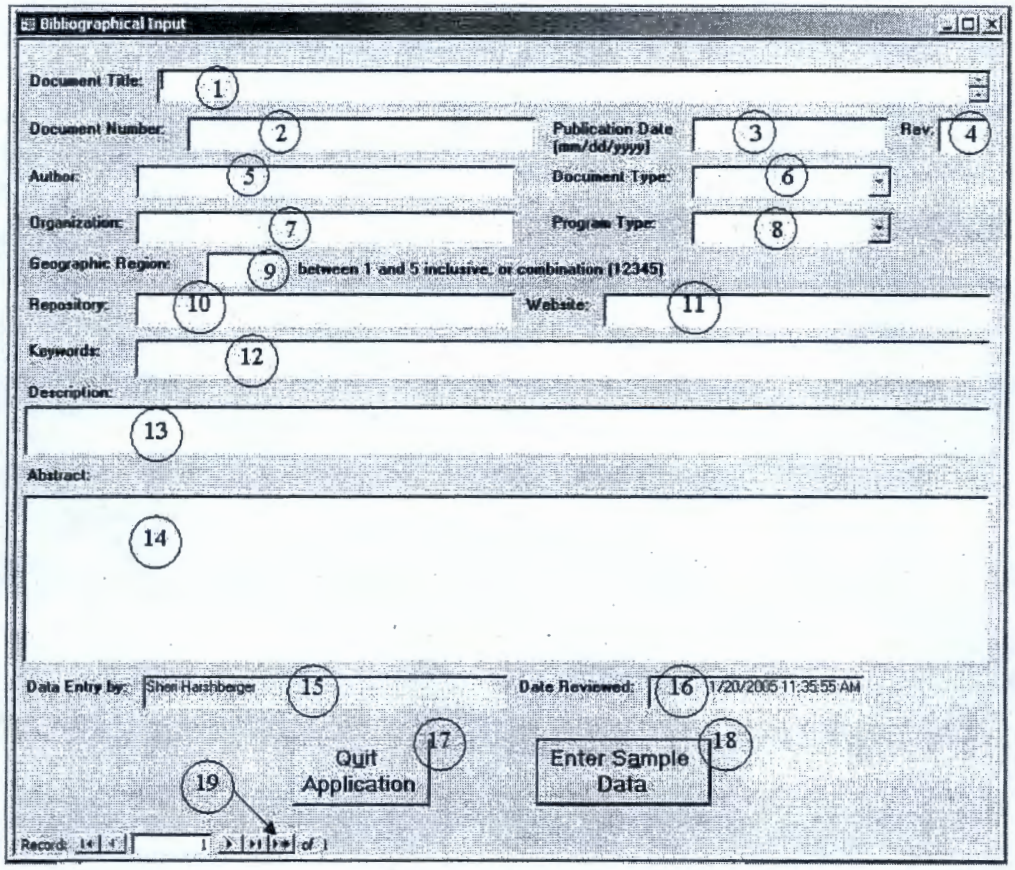

This screen collects the bibliographic information associated with the document. This screen must be completed first, however, it is not required to enter data in all the data fields. Some data fields may not be relevant to certain documents, or the document may be missing information. Enter the appropriate information in as many data fields as possible. The Bibliographical Input Screen provides access to the Sample Input Screen.

The following is a guide to entering data in the Bibliographical Input Screen.

1. Document Title

In the appropriate field provided, enter the document title. If a document has more than one section or part, a reference should be made in the title.

Example: Lower Columbia and Willamette River Contaminant Study, Section 1

2. Document Number

The document number can be made up of letters and numbers. The document number may follow the title or precede it. A document may or may not have a document number. If a number is not available, leave the field null.

Example: EPA 910-R-02-006 or PNNL-1444

3. Publication Date

In this field, enter the date the document was published in mm/dd/yyyy format. If the document is a data extraction, enter the date the extraction was performed.

Example: 01/11/2001

4. Revision Number
Enter the revision number in the appropriate field as a number. The document may or may not have a revision number. If there is no revision number, leave the field null.

Example: 4

5. Author
Type the author of the document in the space provided. If the document is a data extraction and no author is named enter the name of the person who performed the data extraction.

Example: Homer Simpson

6. Document Type
Enter the document type in the data field. DO NOT refer to the type as either hardcopy or electronic, but rather as a more specific definition. See the definition of document type for assistance.

Example: Report

7. Organization
The individual, group or organization that performed the sampling activity shall be entered in the organization data field.

Example: University of Portland

8. Program Type
Enter the program under which the document was created.

Example: Remedial Investigation (RI)

9. Geographic Region
In the geographic region field, enter the document's corresponding region. Five regions exist with the numbers predetermined by the parties responsible for the risk assessment. If the number is not specified within the document, refer to the map of the geographic regions. The document may contain data from more than one of the geographic regions. If so, enter all regions included in the document. Enter the region(s) as a number.

Example: 5 or 135

Note: For the purposes of the risk assessment, if the document does not contain sample data within the geographic region, complete the rest of the bibliography information and end data entry of this source.

10. Repository
Enter the location where the document was found. If the document is online, this field can contain the URL for the home page of the site on which the document was found (home page for the location identified in the Website field).

Examples: http://www.epa.gov

EPA online database

11. Website

If the document is located online, enter the URL in this field. Include the entire address and do not enter just the address to the home page. Include the entire address that will allow someone to follow it to the exact location of the information.

Example: http://www.epa.gov/r10earth/data/crbdata.html?dioxin+#first_hit

Do not enter: http://www.epa/gov

12. Keywords
In this field, enter words that best identify the data within the document. Use general words that describe the document as well as specific terms unique to that data. The keywords will be used to reference the document in a search. DO NOT type complete sentences.

other keywords:
organic
inorganic
species

Example: water, Portland, sulfur, contaminant, Columbia River, Table XYZ

13. Description
In the description field, briefly describe the document and/or explain any unique or important details not captured within the bibliography. If the document title includes a section or part number, explain why the document is divided and how they can be identified.

Examples: The database of this document source is separated into two sections. Section one contains estuarine data. Section two contains riverine data.

If the document is a database extraction, type the "SELECT" statement or query parameters here. Include notes to explain what was done.

Example:

14. Abstract
If the document contains an abstract, and it is not too lengthy, enter it here. If it is lengthy – more than ½ page, summarize it or briefly describe the document and/or explain any unique or important details not captured within the bibliography.

Example:

15. Data Entry By:
This field provides the name of the user entering the data. The name will be carried over from the login box.

16. Date Reviewed
The date reviewed field will automatically enter the current system date of the computer.

17. Quit Application
Select this option to exit the application.

18. Enter Sample Data Button
Select this option if the user wishes to begin entering the sample data of the document shown in the current Bibliographical Input screen.

19. Enter New Bibliographical Record Button
Click this button to add a new Bibliographic record. The buttons in this area allow a user to navigate the entered data in addition to adding new records.

Sample Input Screen

Selecting the Enter Sample Data button on the Bibliographic Input screen opens the Sample Input screen. The Sample Input screens houses several data fields that record specific information about the sample data.

The following illustration is a sample of the Sample Input screen. Each field is numbered and a key is provided as a guide to data entry.

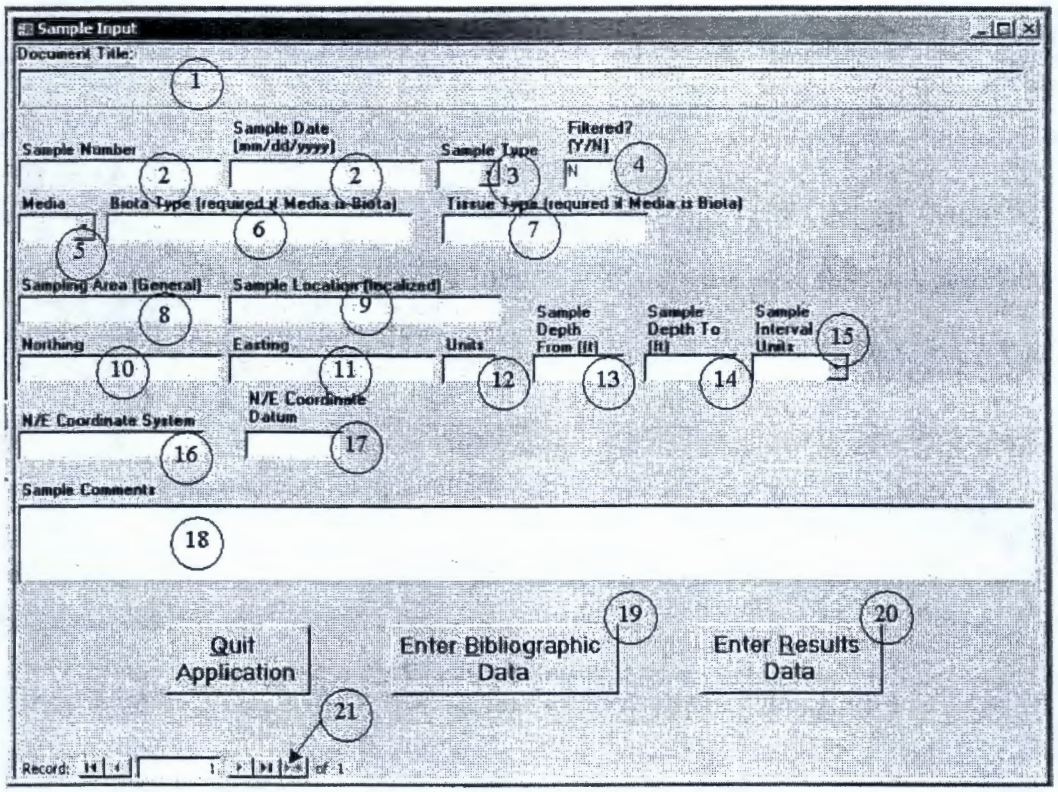

1. Document Title
The document title is carried over from the Bibliographic Input Screen. This field is carried over to allow the user to maintain orientation within the document that is being entered.

2. Sample Number
Enter the sample number in the data field. The sample number is unique to each sample and MUST be accurate for the sample to be traced to the source it was extracted. The sample number may be comprised of both numbers and letters.

Example: 007BND

3. Sample Date
Enter the date the sample was COLLECTED in the sample date field. Do not confuse this field with the publication date or date analyzed.

Example: 09/11/2001

Note: For the purposes of the risk assessment, if the sample date is earlier than the year 1999, save the current information, and stop data entry of the sample.

4. Sample Type
The sample type data field provides the user with a choice list. Choose composite, discrete or grab.

Example: Composite

5. Filtered Flag
Enter either Y or N in the filtered flag data field to identify whether or not the sample was filtered. See the definition of filtered flag for more details. The default setting is N.

Example: N

6. Media
The media data field provides the user with a choice list. Choose from SD, SO, SW, GW, BI, MM. See the media definition for further information.

Example: BI

7. Biota Type
Enter the entity that was sampled in the sample from data field. This field is dependent on the sample media. Leave this field null if the media is not biota (BI).

Example: Steelhead

8. Tissue Type
Enter the specific part of the entity being sampled. This field is dependent on the entity entered in the biota type data field. Leave this field null if the media is not biota (BI).

Example: Bladder

9. Sample Area
Enter the code, name, or description assigned to the sampling event in the sample area data field. See the sample area definition for more details.

Example: McNary Dam

10. Sample Location
Enter the unit, code, or description assigned to the sample in the sample site data field. The sample site is a more localized description within the sample area. See the sample site definition for more details.

Example: 1 River Mile Downstream

11. Northing
Enter the north/south coordinate in the data field. If a value is entered in this field, a value MUST be entered in the east/west coordinate, coordinate datum, AND coordinate units data fields. If the coordinates are in Latitude and Longitude, Latitude would be entered in this field.

Example: 147943.21

If the coordinates are in Latitude and Longitude (Lat Long), Latitude would be entered in this field. Lat Long coordinates are typically in the following formats:

Option 1: dddmmssD or ddd mm'ss" D

where ddd = 1-3 digits for degrees, mm = 2 digits for minutes, ss = 2 digits for seconds and D = N, S, E or W.

Option 2: ddd.ffffD

where ddd = 0-3 digits, ffff = 0-10 digits and D = N, S, E or W. this format represents a decimal number of degrees. If the number of degrees is a whole number, the decimal point is optional.

Option 3: ddd mm.ffff'D

Where ddd = 0-3 digits for degrees, mm = 2 digits for minutes, ffff = 0-10 digits for decimal portion of minutes and D = N, S, E or W. This format represents degrees and a decimal number of minutes.

Latitude is always expressed as the degrees of the elevation angle of the coordinate point from the equator (between 0 and 90). To ensure consistency of data entry the following format will be used to represent the degrees, minutes and seconds of Latitude coordinates.

Example: 46° 10' 31.0" would be input as 46d 10m 31.0s

12. Easting

Enter the east/west coordinate in the data field. If a value is entered in this field, a value MUST be entered in the north/south coordinate, coordinate datum, AND coordinate units data fields. If the coordinates are in Latitude and Longitude, Longitude would be entered in this field. See "11. North/South Coordinates" for discussion on Lat Long coordinate system.

Example: 576943.21

If the coordinates are in Lat Long, Longitude would be entered in this field. See "11. North/South Coordinates" for a discussion on Lat Long.

Longitude is always expressed as the degrees of the diameter of the earth of the coordinate point from the equator (between 0 and 360). To ensure consistency of data entry the following format will be used to represent the degrees, minutes and seconds of Longitude coordinates.

Example: 123° 07' 31.3" would be input as 123d 07m 31.3s

13. Coordinate Units

Pick the appropriate unit of measurement for the northing/easting coordinate from the choice list in the data field. This field is required if northing/easting coordinates are entered in their corresponding data fields. See the coordinate units definition for further detail.

Example: m

14. Sample Depth From

Enter the vertical coordinate for the sample site in the elevation data field. Negative values indicate that the location is below the surface. Entry in this field is optional.

Example: 28.9

15. Sample Depth To

Enter the vertical coordinate for the sample site in the elevation data field. Negative values indicate that the location is below the surface. Entry in this field is optional.

Example: 28.9

16. Sample Interval Units
Enter the units of elevation in the data field provided. This field is optional if no data is entered in the elevation data field.

Example: m

17. Coordinate System
In the field provided, enter the coordinate system in which the northing/easting coordinates are taken. This field is required if the northing/easting coordinates are recorded in the previous fields.

Example: Washington State Plane, South Quadrant

18. Coordinate Datum
Choose either NAD83 or NAD27 as the coordinate type in the coordinate datum data field. If neither type is appropriate, enter what is given. UNKNOWN should be used only if no datum is available.

Example: NAD27

19. Comments
Enter

20. Enter Bibliographic Data Button
Select this option if the user wishes to enter a new bibliography for a document. Selecting this option saves the current information and opens a new Bibliographic Input screen.

21. Enter Results Data Button
Select this option if the user wishes to enter a new bibliography for a document. Selecting this option saves the current information and opens a new Bibliographic Input screen.

22. Enter New Sample Record Button
Click this button to add a new Sample record for the Result. The buttons in this area allow a user to navigate the entered data in addition to adding new records.

Results Input Screen

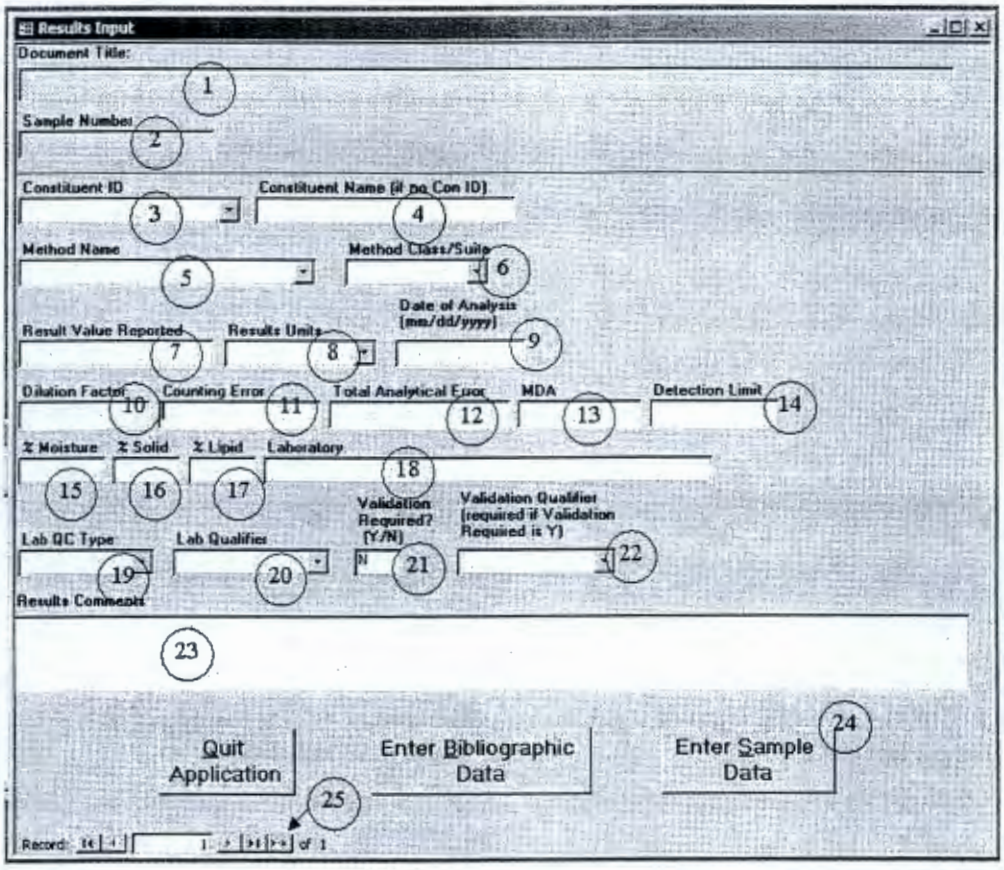

1. Document Title
The document title is carried over from the Bibliographic Input Screen. This field is carried over to allow the user to maintain orientation within the document that is being entered.

2. Sample Number
Enter the sample number in the data field. This field is carried over to allow the user to maintain orientation within the document that is being entered.

3. Constituent ID
In the data field provided, type the Constituent ID or CAS number. A pick list is provided, but entries are not limited to the list. See also the definition of Constituent ID for complete list.

Example: 7439-93-2

4. Constituent Long Name
The constituent long name is the textual description of the Constituent ID. Entering data in this field is optional.

Example: Lithium

5. Method Name
Enter the method name in the field provided. The method name is comprised of numbers, letters, periods, and underscores. See the definition of method name a complete list.

Example: 289.2 _ZNG_GFAA

Note: For the purposes of the risk assessment, if the method cannot be determined, save the current information, and stop data entry of the sample.

6. Method Class/Suite
Enter the method name in the field provided. The method name is comprised of numbers, letters, periods, and underscores. See the definition of method name a complete list.

Example: 289.2 _ZNG_GFAA

Note: For the purposes of the risk assessment, if the method cannot be determined, save the current information, and stop data entry of the sample.

7. Result Value Reported
In the value reported data field, enter the magnitude of concentration or activity measured during the analysis of the sample.

Example: 4.7893895

8. Results Units
The analysis units reported data field provides a choice list. Pick the appropriate type of units. This field is dependent upon the value reported. If the value reported data field is null, there should be no analysis units reported. See the analysis units reported definition for more information on the choice list.

Example: ug/L

Note: For the purposes of the risk assessment, if no analysis units are reported, save the current information, and stop data entry of the sample.

9. Date Analyzed
Enter the date that the sample analysis was performed. Do not confuse this data field with the sample date.

Example: 12/25/00

Note: For the purposes of the risk assessment, if the date analyzed is earlier than the year 1999, save current information, and stop data entry of the sample.

10. Dilution Factor
In the data field provided, enter the value representing the amount the sample was diluted by.

Example:

11. Counting Error
Enter the counting error, which is measured by counting disintegrations of radioactive analytes, in the appropriate data field. It is reported in the same units as the result value for the current analyte. See the counting error definition for more details.

Example: -0.0102

12. Total Analytical Error
Enter the total analytical error in the corresponding data field. See the definition of total analytical error for more information.

13. Minimal Detectable Activity
Enter the minimal detectable activity (MDA) in the data field. The MDA should be reported in the same units as the result value for the current analyte. See the MDA definition for a further explanation.

14. Detection Limit
In the data field provided, enter the detection limit. See the detection limit definition.

Note: For the purposes of the risk assessment, for nonradiological constituents, nondetected results must have a reporting limit value and a "U" flag assigned. For radiological constituents, nondetected results are reported as the MDA. When detected and nondetected results are clearly reported using the above criteria, they are considered usable. If reporting limits and MDAs are not provided, then only detected results can be used for the nature and extent purposes. Otherwise, save the current information, and stop data entry of the sample.

15. Percent Moisture
Enter the proportion of moisture in the sample in the percent moisture data field. See the percent moisture definition for more information.

Example: .91

16. Percent Solid
Enter the proportion of solids in the sample in the percent solid data field. See the percent solid definition for more information.

Example: .84

Note: For the purposes of the risk assessment, soil, sediment, and biota sample results should be reported on a wet-weight basis. However, some laboratories will adjust results to reflect the percent solids content and report on a dry-weight basis. If sample results are reported on a dry-weight basis, then percent solids results must accompany results so that a conversion to wet-weight can be made. If not, save the current information, and stop data entry of the sample.

17. Percent Lipid
Enter the proportion of lipids in the sample in the percent lipid data field. This field is only required for biota samples. Leave the field null for other types of media. See the percent lipid definition for more information.

Example: .72

18. Laboratory
Enter the appropriate lab code in the field provided. See the lab code definition for the list of codes.

Example: DOH

19. Lab QC Type
Enter S, R, or B to indicate if the sample is related to other samples in the lab QC type data field. Do not confuse this field with QC samples. See the lab QC type definition for more information.

Example: B

20. Lab Qualifier
Enter the valid qualifier in the lab qualifier data field. See the lab qualifier definition for a complete list.

Example: Z

21. Validation Qualifier Flag
Enter either Y or N in the validation qualifier flag data field. Select Y if the data requires validation. Select N if the data does not require validation.

Example: Y

Note: For the purposes of the risk assessment, if the sample cannot be validated, save the current information, and stop data entry of the sample.

22. Validation Qualifier
Enter the validation qualifier code in the data field provided. Entry in this field is required only if Y is entered in the validation qualifier flag data field. The see the validation qualifier flag definition for information on the codes.

23. Results Comments
Enter the validation qualifier code in the data field provided. Entry in this field is required only if Y is entered in the validation qualifier flag data field. The see the validation qualifier flag definition for information on the codes.

24. Enter Sample Data Button
Enter the validation qualifier code in the data field provided. Entry in this field is required only if Y is entered in the validation qualifier flag data field. The see the validation qualifier flag definition for information on the codes.

25. Enter New Result Record Button
Click this button to add a new Result record for the Sample. The buttons in this area allow a user to navigate the entered data in addition to adding new records.

BIBLIOGRAPHICAL INPUT – EXAMPLE #1

Document Title: Water Quality of the Lower Columbia River Basin: Analysis of Current and Historical Water-Quality Data through 1994

Document Number: USGS Water-Resources Investigations Report 95-4294

Publication Date: 1996

Rev: NA

Author(s): Fuhrer, Gregory J., Dwight Q. Tanner, Jennifer L. Morace, et al.

Document Type: Published Document

Organization: United States Geological Survey

Program Type: Monitoring

Geographic Region: 5

Repository: USGS, STORET, NWIS, Other

Website: http://www.lcrep.org/columbia_bistate.pdf

Keywords: surface water samples, sediment samples, fish-tissue samples, historical trends, metals, organic, anions, pesticides, PCBs

Description: 1994 Surface Water Data - 4 Columbia River locations @ RM 141, RM 102, RM 82.4, RM 53.8, and 6 tributary locations; Historical - Numerous locations/samples for Columbia and tributaries for various media

Abstract: This report describes water-quality conditions in the lower Columbia River by comparing data collected historically with data collected in 1994 from the Bonneville Dam to the mouth of the Columbia River. Historical water quality data spanning more than 50 years was collected and evaluated in this report for more than 200 parameters for more than 50 years of data up to 1993. This data was obtained from three sources: EPA's STOrage and RETreival (STORET) database, USGS's National Water Information System (NWIS) database, and Tetra Tech, Inc. synoptic studies. The historical data was categorized into eight groups 1) major ions; 2) water temperature and pH; 3) dissolved oxygen; 4) nutrients; 5) trace elements; 6) organic compounds; 7) suspended-sediment; and 8) bacteria.

Data collected in 1994 included water samples for anions (both filtered and unfiltered), metals (filtered), organics (filtered).

Data Entry by: computer default

Date Reviewed: computer default

Water Quality of the Lower Columbia River Basin: Analysis of Current and Historical Water-Quality Data through 1994

By Gregory J. Fuhrer, Dwight Q. Tanner, Jennifer L. Morace, Stuart W. McKenzie, and Kenneth A. Skach

U.S. GEOLOGICAL SURVEY
Water-Resources Investigations Report 95–4294

Prepared in cooperation with the
Lower Columbia River Bi-State
Water-Quality Programs

Portland, Oregon
1996

Document Title: a unique record will be assigned for each document created

Document Number:

Publication Date: Should be limited to month and year (mm/yyyy)

Author(s): Limited to first three authors, et al.
Format - First author last name first, then first name, next two authors will have first name, then last name

Document Type: survey, published document, dissertation

Organization: Add a pull down menu for common sources (USGS, COE, EPA, Department of Health, BPA)

Program Type: Monitoring, remedial investigation/feasibility study, environmental impact statement, NPDES, dredging

Geographic Region: 1 through 5 (or any combination) using "check boxes"

Repository: Where is it now?

Key Words: Possibly points to another page which contains common key words which would allow user to use a "check box" word rather than inputting them manually

Examples -

- Historical trends, annual data, quarterly data, monthly data
- Water Descriptors - surface water, interstitial water, groundwater, effluent, pore water, hyporheic, water quality parameters
- Soil/Sediment Descriptors - Sediment, soil, surface soil, suspended sediment, simultaneously extractable metals/ acid volatile sulfides (SEM/AVS), particle size distribution
- Biota Descriptors -fish, clams, mollusk, snail, crayfish, vertebrates, benthic, invertebrate, worms, macrophyte, algae, periphyton
- Contaminants- metals, dissolved particulates, anions, cations, organics, volatile organic compounds (VOC), semivolatile organic compounds (SVOC), total petroleum hydrocarbon (TPH), polychlorinated biphenyl (PCB), organochlorine pesticides, organophosphosphate pesticides, dioxins, furans

Description: Locations, sample numbers, environmental media type, physical setting information (regional geology, hydrology, topography, river morphology, sediment transport, land use, human development (residential, commercial, industrial, recreational), biotic habitat information (threatened and endangered species), biological study information - histopathology and biomarker studies, benthic studies, natural resource information (habitat types, resident fish species, seasonally resident fish species, migratory fish species, threatened and endangered species, special aquatic sites, upland plants and animals)

Abstract: Applicable and relevant information will be taken from existing document abstract

Status of evaluation: Complete
Ongoing

Document obtained? Yes in hand
No – Need to acquire

Data obtained? Yes in hand
No need to aquire
No not available

ERC Risk Assessment Project Team

Name	Responsiblities	Contact Information
Darci Teel	*Risk Assessment and Site Closure Project Manager*	(509) 372-9633 DDTeel@bhi-erc.com
Tom Marceau	*Columbia River Component of the RCBRA Task Lead*	(509) 372-9289 TEMarcea@bhi-erc.com
Donna Morgans	*Risk Assessment Lead*	(509) 372-9427 DLMorgan@bhi-erc.com
Tim Lee	*Project Environmental Lead (tasked with organizing the project team)*	(509) 372-9143 TALee@bhi-erc.com
Sherri Harshberger	*Data Management Support*	(509) 372-9070 SLHarshb@bhi-erc.com
Ken Gano	*100-B/C Pilot Project Task Lead*	(509) 372-9316 KAGano@bhi-erc.com
Steve Weiss	*100 Area and 300 Area Component of the RCBRA Task Lead*	(509) 372-9495 SGWeiss@bhi-erc.com
Jenifer Linville	*Ecological Risk Assessor*	(509) 372-9107 JKLinvil@bhi-erc.com
Jill Thomson	*Human Health Risk Assessor*	(509) 372-9200 JEThomso@bhi-erc.com
Barry Vedder	*Regulatory Expert (CERCLA)*	(509)372-9444 BLVedder@bhi-erc.com
Shanna Muns	*Administrative Assistant*	(509) 372-9584 SKMuns@bhi-erc.com

DOE Project Manager is John Sands (509-372-2282)

Ward, Dana C

From: Teel, Darci D
Sent: Friday, January 21, 2005 11:55 AM
To: Sands, John P; Ward, Dana C
Subject: FW: Columbia River Component: Existing Data January Workshop

John & Dana -- Here is the full announcement with attachments. Obviously it includes everyone! It says to attend based on your interest. Nitzya will put it on outlook for all of us.
Darci

-----Original Message-----
From: Johnson, Yvette L
Sent: Friday, January 07, 2005 9:13 AM
To: 'susie@kauffmaninc.com'; Bryce, Robert W; 'cscearloc@bhi-erc.com'; Clarke, Kevin V; 'rldirkes@pnl.gov'; 'dirk.a.dunning@state.or.us'; 'relisondo@yakama.com'; Fogwell, Thomas; Harshberger, Sheri L; 'kathryn.higley@oregonstate.edu'; 'dick.jaquish@doh.wa.gov'; 'tom@kauffmaninc.com'; Lee, Timothy A; 'emily@kauffmaninc.com'; Marceau, Thomas E; 'j.mccon@verizon.net'; Mann, Frederick M; Miley, Terri B; 'dmorgnas@ch2m.com'; Poston, Ted M; 'mike.priddy@doh.wa.gov'; 'callie@ridolfi.com'; 'riggsbee@owt.com'; Sands, John P; 'bsample@ch2m.com'; 'gschreck@tricity.wsu.edu'; 'johns@nezperce.org'; Thompson, K M (Mike); 'scott.vanverst@doh.wa.gov'; Ward, Dana C; Weiss, Stephen G; 'mwwiley@u.washington.edu'; 'dwillis@columbia-energy.com'; Zeisloft, Jamie; Gelston, Gariann M; Faulk, Dennis; McCormick, Matthew S; Bymes, Mark E; Fruchter, Jonathan S; Wisness, Steven H; Rasmussen, James E (Jim); Nelson, Todd A; Borghese, Jane V; Ford, Bruce H; Ceto, Nicholas; Hedges, Jane; Bazzell, Kevin D; Clark, Steven W; Chalk, Steven E; Thompson, K M (Mike); Wyer, Russel H; Peterson, Robert E; Hiskes, Edward V; Lober, Robert W; Hildebrand, R D (Doug); Freshley, Mark D; Kincaid, Charles T; Jaraysi, Moses; Erickson, Leif; Downs, Janelle L; Teel, Darci D; Gano, Kenneth A (Ken); Weiss, Stephen G; Linville, Jenifer K; Thomson, Jill E; Fecht, Karl R; Rodriguez, Annabelle L; 'Lew Pamplin'; Vedder, Barry L; Hood, Amy M; Ovink, Roger W; 'viguelav@dfw.wa.gov'; 'brycemeado@aol.com'; 'helen.hillman@noaa.gov'; 'susan.c.hughes@state.or.us'; 'mary.baker@noaa.gov'; 'danl@nezperce.org'; 'rbuck@gcpud.org'; 'LSEELAT@gcpud.org'; 'bharper@amerion.com'; 'johns@nezperce.org'; 'russell@yakama.com'; 'pats@nezperce.org'; 'veras@nezperce.org'; 'thpo@televar.com'; 'StuartHarris@CTUIR.com'; Gnann, Howard
Subject: Columbia River Component: Existing Data January Workshop

ANNOUNCEMENT

COLUMBIA RIVER COMPONENT OF THE RIVER CORRIDOR BASELINE RISK ASSESSMENT PROJECT

JANUARY WORKSHOP FOR COLLECTION AND EVALUATION OF EXISTING DATA ON HANFORD SITE RELEASES TO THE COLUMBIA RIVER

On January 25, staff with the Columbia River Component of the River Corridor Baseline Risk Assessment Project will be hosting the second of three workshops that will be conducted to develop the guidelines for compiling and evaluating existing data on Hanford Site contaminants released to the Columbia River.

As discussed in the previous workshop, the initial task of the Columbia River Component Risk Assessment will be to compile, review, and evaluate existing information on Hanford Site contaminant data (i.e., radionuclides and hazardous chemicals) from Astoria, Oregon to above the Hanford Site to identify exposures that may effect human health and the environment within or adjacent to the Columbia River. Using the evaluation guidelines developed through this series of workshops, these data will be used for the risk assessment work plan and the subsequent data quality objectives (DQO) process as the basis for documenting our current state of knowledge regarding the extent of and quality of existing data, as well as the identification of gaps not bridged by these data.

Our intent is to status the progress of the Columbia River Component Risk Assessment, address the issues from the previous workshop, and then involve the technical-level participants and subcontractees of the effort. A draft agenda is attached to this announcement. Please plan on attending according to your interests.

The workshop will be held at Washington State University at Tri-Cities, Consolidated Information Center (CIC), Room 210, George Washington Way in Richland beginning at 8:00 a.m. A map to the location is attached for

Columbia River Component of the
River Corridor Baseline Risk Assessment Project

Follow-Up (Second) Workshop
Collection and Evaluation of Existing Data On Hanford Site Releases to the Columbia River

January 25, 2004

Draft Agenda

Topic	Presenter	Time
Welcome/introductions	Dee Willis	8:00 – 8:15
Subcontractors' status/questions	ERC staff	8:15 – 9:00
Break		
Status: Parking Lot/Action Items	ERC staff	9:15 – 10:30
Data Entry Demonstration	Sheri Harshberger	10:30 – 11:30
Lunch		11:30 – 1:00
Preliminary Data Evaluation Process	Donna Morgans	1:00 – 2:00
CERCLA requirements and project boundaries	Barry Vedder	2:00 – 2:30
Break		2:30 – 2:45
Risk Assessment Integration and the Configuration Management Group	John Morse	2:45 – 3:30
Evaluation, next steps, and closing	Dee Willis	3:30

Tues 15th 1 to 5

Ed 627-1113

Feb 3rd tues
March 3rd tues

Next Trustee Meeting

- Horseshoe landfill
- 3 point agreement
- Metrix
- Senior Trustee Meeting (March 25th?)