0001173

DISTRIBUTION COVERSHEET

Author	L. L. Powers R1-06	Addressee	Mr. John Littler, Program Manager State of Washington Department of Ecology Mailstop PV-11 Olympia, Washington 98504-8711
Correspondence No.	8850745 -WASHINGTON DEPARTMENT OF ECOLOGY COMPLIANCE ORDER DE 87-295, 216-A-36B CRIB		

Internal Distribution

Approval		Date	Name	Location		w/att
X	[illegible]	2/5/88	G. D. Carpenter	2750E/D298/2E	R2-85	
			W. M. Jacobi	PBB/501/1100	B3-01	
X			J. R. Knight	2750E/C205/2E	R2-52	
			R. E. Lerch	2750E/C200/2E	R2-53	
			H. E. McGuire	2750E/B208/2E	R2-41	
X	[illegible]	2/1/88	L. L. Powers	2750E/D107/2E	R1-06	X
X	[illegible]	2/1/88	P. S. Schaus	2750E/C133/2E	R1-06	X
X	[illegible]	2/1/88	E. C. Vogt	2750E/D259/2E	R2-92	
			S. A. Weber	PBB/513/1100	B3-04	
X			S. A. Wiegman	2751E/D126/2E	R3-01	
X	[illegible]	2/3/88	R. J. Baumnardt	2750E/B217/2E	R2-40	
X			B. R. Dickey	2750E/C204/2E	R2-54	
X			K. A. Gasper	2750E/D100/2E	R1-15	
X			C. J. Geier	MO-413/122/2E	S1-12	
			S. D. Godfrey	MO-023/2E	S5-80	
X			K. L. Hoewing	PBB/547/1100	B3-06	
			G. S. LeBaron	202A/MO-023/2E	S5-80	
			DWM Central File		R2-41	X
			Correspondence Control			X

54-6000-117 (08/87)

Department of Energy
Richland Operations Office
P.O. Box 550
Richland, Washington 99352

February 2, 1988

Mr. John Littler, Program Manager
Hazardous Waste Cleanup Program
State of Washington
Department of Ecology
Mail Stop PV-11
Olympia, Washington 98504-8711

Dear Mr. Littler:

WASHINGTON DEPARTMENT OF ECOLOGY COMPLIANCE ORDER DE 87-295, 216-A-36B CRIB

The U.S. Department of Energy - Richland Operations Office (U.S. DOE-RL) and Westinghouse Hanford Company (WHC) have taken the necessary actions to meet the requirements of Compliance Order DE 87-295. The requirements and actions taken are listed below.

1. Immediately cease discharges to the 216-A-36B Crib facility.

   o Discharges to the crib were stopped prior to the issuance of the compliance order.

2. By February 2, 1988, U.S. DOE-RL shall identify and report to the department all other hazardous and non-hazardous wastes that have been discharged to the 216-A-36B Crib. This report must characterize these wastes and provide information including waste constituents, concentrations, volumes, frequency of discharges and dates of releases. Formal waste characterization pursuant to Chapter 173-303-070 shall also be conducted.

   o A report, "Properties and Environmental Impact of Ammonia Scrubber Discharge Waste to the 216-A-36B Crib," is attached (Attachment 1).

3. By February 2, 1988, U.S. DOE-RL shall submit to the department a Hazardous Waste Part A permit application in accordance with 173-303-805.

   o The Part A permit application for 216-A-36B Crib is attached (Attachment 2).

4. By February 2, 1988, comply with all applicable requirements of Chapter 173-303 WAC, except for 40 CFR Part 265 Subpart F. Compliance with 40 CFR Part 265 Subpart F shall take place no later than June 1, 1988.

- o The interim status closure/post-closure plan (excluding sections dealing with groundwater monitoring) is attached (Attachment 3). Groundwater monitoring wells will be installed by June 1, 1988, as required, and the closure/post-closure plan will be amended to include groundwater data by September 30, 1989.

5. By February 2, 1988, U.S. DOE-RL shall develop and submit to Ecology engineering studies and designs which will preclude all discharges to the 216-A-36B Crib.

   - o The actions taken to preclude discharges to the 216-A-36B Crib are documented in Attachment 4.

If you have any questions regarding these data/documents, please contact H. E. McGuire on (509) 373-5415 or L. L. Powers on (509) 373-4981.

Very truly yours,

R E Lerch

R. E. Lerch, Manager
Defense Waste Management Division
Westinghouse Hanford Company

R. D. Izatt, Director
Waste Management Division
U.S. Department of Energy
Richland Operations Office

dh

Attachments 4

U.S. DOE-RL - A. W. Kellogg, AMO (w/o attachments)

EPA - J. O'Hara

WDOE - J. Neel
R. Stanley

Attachment 4

ELIMINATION OF DISCHARGES TO 216-A-36B CRIB

Upon receipt of the directive requiring all discharges to crib 216-A-36B be discontinued, existing documentation was reviewed and knowledgeable people consulted to determine liquid sources discharged to the crib (see attached figure 1). As a result, the following actions were taken:

- The following prints, documenting the ammonia scrubber distillate (ASD) system configuration were reviewed to verify that all streams to the ASD were identified:

H-2-53096	H-2-55101-02	H-2-55036
H-2-57042	H-2-57429,67	H-2-57538
H-2-58226	H-2-58997	H-2-59802,04,05
H-2-64784,85,96	H-2-65146,62,63,72	H-2-65659,61

  See figure 1 for a schematic representation of the ASD system prior to isolation.

- Pancake blanks were installed upstream of the ASD flowmeter, downstream of the flow meter bypass valve (work authorization (WA) #7315012 - attached), and in the sump pump and sampler/monitor return lines (WA #8011012 - attached). This precludes all process flow going to the crib (see figure 2).

  Since liquid may have to be transferred through the sump pump and sample return lines in the future, an engineering service request (ESR) (#12564) was issued to permanently re-route these lines so any solution would return to TK F12 (see figure 2 - "Future" configuration).

- The spectacle blind in the ASD line was changed to the open position to allow liquid entering the header upstream of the pancake blanks to drain to TK F12 (WA #7315011 - attached). This action redirects all flows (stack drain, fan drain, sampler jet condensate, etc.) from the 291 AD area to TK F12 (see figure 2) from where the solution will be transferred to underground storage.

- The ammonia scrubber waste discharge pump jumper was removed and the associated nozzle (FT-108) was blanked (canyon change order (CC) #87-141 - attached).

- Piping to the ASD header was visually inspected to verify that all lines had been identified to assure that there were no other routes to the header.

- Finally, a visual inspection of the ASD collection header, using the riser southwest of 291 AD was conducted by Processing Engineering to verify that the above actions eliminated flow to the ASD crib. No liquid flow was observed.

Attached, as a means of documenting this effort, are copies of the closed WAs, inspection plans, completed CCO, system tags, and ESR. This work has eliminated liquid flow the 216-A-36B crib.

FIGURE 1 - DISCHARGE ROUTE TO 216-A-36B (ASD) CRIB

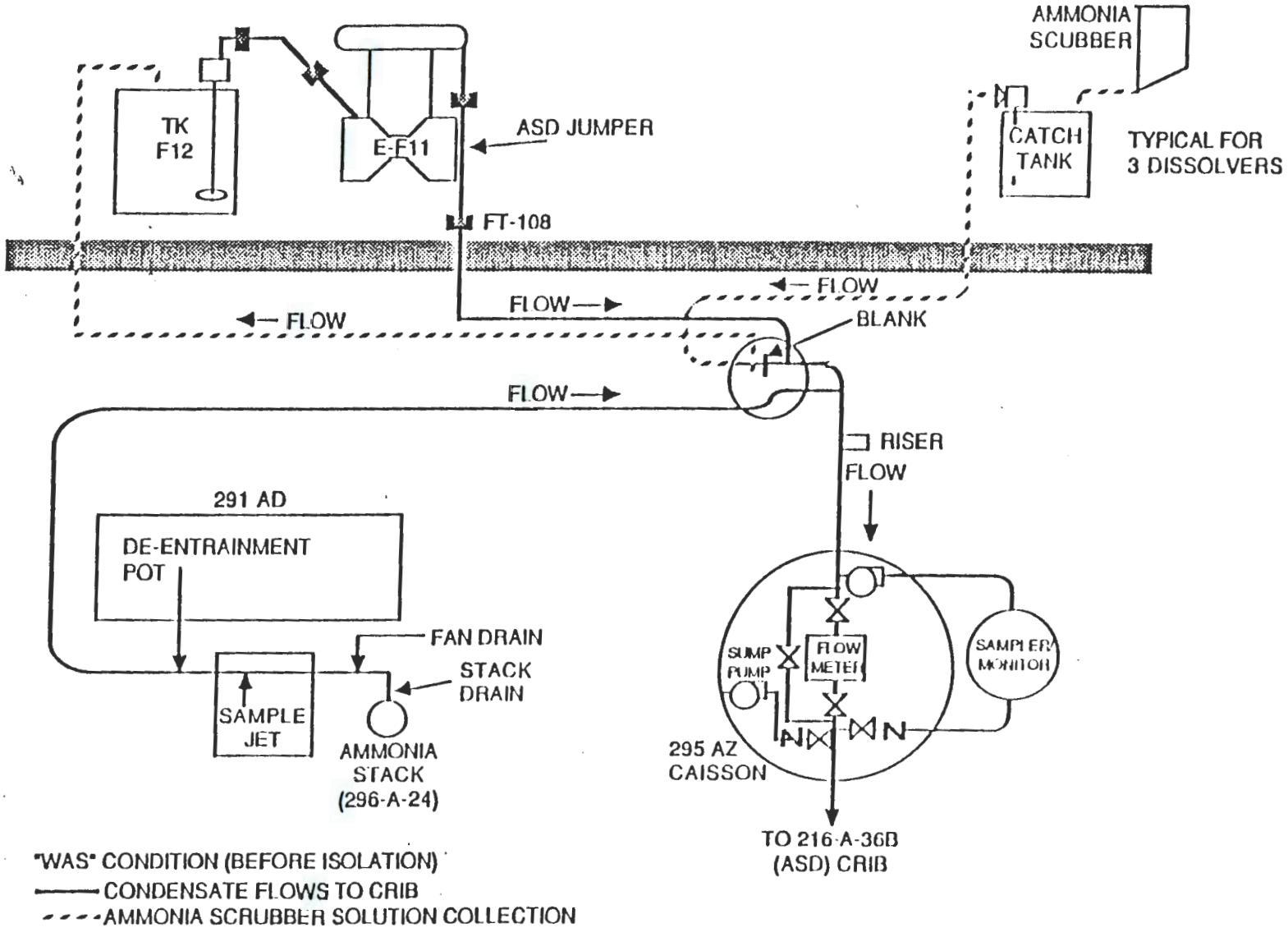

FIGURE 2 - DISCHARGE ROUTE TO 216-A-36B (ASD) CRIB DEACTIVATED

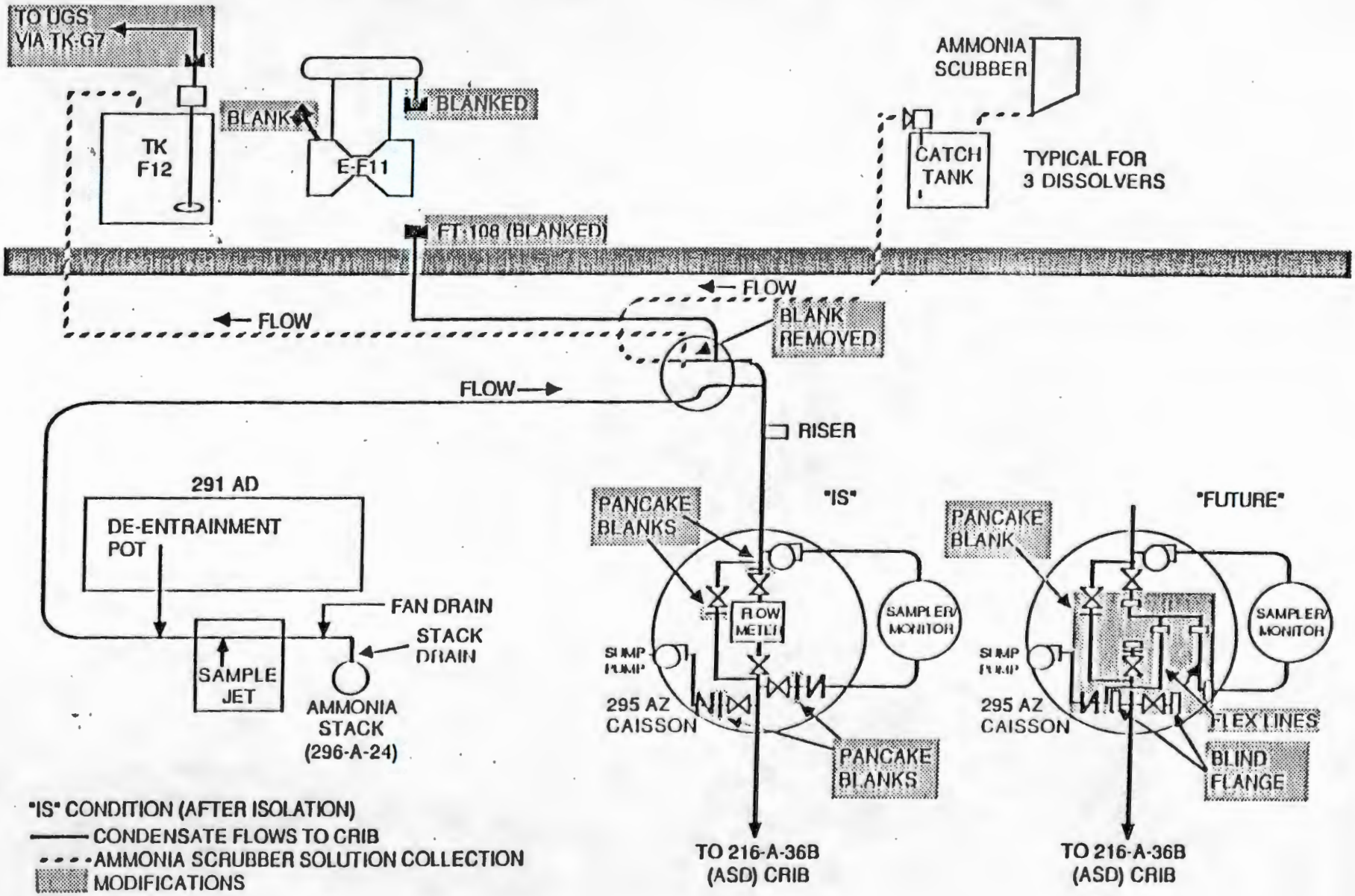

WA # 2A-7315012

MSE 060.01GB — Work Authorization — Page 1

IEFD Dwg #	Equip Pc #	How Discovered	DivCod	DivOp	SysCod	SysO
H-2-65651 03 01	LIST	CD	LEF	R	W50	D

Originator	Orig Code	OrigPh	Area	Bldg	I/O	Dir'n Wall	Nd D
CLINE	47500	3-3751	200-E	295-A	OUT	SOUTH IN PIT	1112

Task Description: INSTALL PANCAKE BLANKS DOWNSTREAM OF V110 & V120
QC VERIFICATION IS REQUIRED

QC INSPECTI

Work Auth #	Pri	Task Title	Safety	Work Seq. Pl
2A 7315 012	1	BLANK ASD HEADER	O	N

Authorized	Approved By	ServOrg	Mat Cost	LaborCost	TotalCo
DIXSON		52100	$	$	$

ChargeCode	CrossCh	Next FY	Assigned To	Crft	EstHrs	Type	DavSac	Outsi
KP43E	N	N	MOONEY	24	6	R	N	N

Reference Auth	Subord Auth	ESR #	EO #	OREO #	VI #
		N	N		

Permits Required	HAZ	CUT	EXC	TIE	COR	OTH	RWP	ALARA	Material	Outage
	Y	N	N	N	N	N	A-11	N	Y	N.

Critic	Criticality Engineer	SEL	Process Engineer	Prejob Safety	IRR
N		Y	11-19-87	Y	N

QA Ins	QA Signature	IH&S/OHP	Safety Signature	Job Safety Analys
Y	11-20-87	Y		N

Planned	PlanDate	PlanPhone	Schedul Start Date	Schedul Compl Dat
D.D.MORRISON 11-11-87	111187	3-3634	111287 Shft 2	121287 Shft 2

Released	RelShf	RelDat	Lock Tag		Bypass		
	2	11/23/87	Y/N	IL	RL	Y/N Y	IB	RB

Functional Test: QC TO VERIFY JOB COMPLETE

Work Performed: As Per Described

Idle Equipment	Actual Hours	Removed Serial #
	8 Hrs	

Action Taken	Malfunction	Install Serial #

Completed (Craft)	CompDate	Verified By	Verif Dat	Removed Prop #
	11-24-87		11/24/87	

Reviewed	RevDate	Accepted By	Acc Date	Installed Prop #
	11/24/87		11/24/87	

IEFD Updated	CAD Updated	Closed Out	Closed Date

FABRICATION/INSTALLATION INSPECTION PLAN	PUREX	1515 U12
	QA Level ☐ I ☒ II ☐ III	Quantity Two
Item/Description: Installation of Nuclear Blanks for V110 & V120	Dwg/Spec No.(s): H-2-65659	Rev. 2 / FCN No.
Location: 202-A	Prepared by: [signature]	Date: 11-20-87

NOTICE: Notify QC for performance of inspection/examination/test, prior to start of work for each hold point.

Check Point	Req'd	Hold Point	Inspection Complete (Date & Stamp)
1. Verify acceptance of fabricated material. ~~Remove and attach green tag~~(s). Count S/STL. 304 [illegible] 11-23-87	x	x	11/23/87 [illegible] C 75 C RHO
2. Verify removal of spool piece and attachment to valve or line. If Valve or spool Pc. Not removed NA. [illegible] 11-20-87	x	x	N/A 11/23/87 [illegible] C 75 C RHO
3. ~~Verify installation of vented nuclear blank (Type).~~ N/A 11-20-87	x	x	—
4. Verify installation of ~~nuclear~~ Concrete blank. [illegible] 11-23-87	x	x	11/23/87 [illegible] C 75 C RHO
5. Verify change(s) entered on IEFD's and work completed.	x		11/24/87 [illegible] C 75 RHO

blanked V-110 @

blanked at V-120

A-6700-123.1

INSPECTION PLAN

☐ I ☒ II ☐ III

Item/Description	Dwg/Spec No.(s)	Rev.	FCN No.
Switch Spectacle Valve	H-2-64937	6	
To Open Position.			

Location	Prepared by	Date
295-A	[illegible]	11-20-87

NOTICE: Notify QC for performance of inspection/examination/test, prior to start of work for each hold point.

Check Point	Req'd	Hold Point	Inspection Complete (Date & Stamp)
1. Q.C. To attend Pre-Job Safety meeting and sign-off attendance sheet	X	X	11/23/87 [illegible] QC RHO
2. Verify Spectacle Valve switched To The open position. Ref. H2-64937 C-D-11	X	X	11/23/87 [illegible] QC RHO

A-6700-123.1 (R-

WA # 2A-8011012

MSE 060.018B — Work Authorization — Page 1

IEFD Dwg #	Equip Pc #	How Discovered	DivCod	DivOp	SysCod	SysOp
H-2-65631 03 01	VALVES V160 & V180	CD	LEF	R	W50	D

Originator	Orig Code	OrigPh	Area	Bldg	I/O	Dir'n	Wall	Nd Dt
CLINE	47500	3-3751	200-E	295-AZ	IN	ASD	PIT	011288

Task Description: INSTALL BLANKS ON VALVES V-160 AND V-180, LOCATED IN THE ASD SAMPLE PUMP PIT. QC VERIFICATION REQ.

QC INSPECTION REQUIRED

Work Auth #	Pri	Task Title	Safety	Work Seq. Plan
2A 8011 012	1	ASD VALVE BLANKS	OI	N

Authorized By	Approved By	ServOrg	Mat Cost	Labor Cost	Total Cost
DIXSON		52100	$	$	$ 0

ChargeCode	CrossCh	Next FY	Assigned To	Crft	EstHrs	Type	DavBac	Outside
KP43C	N	N	ML MOONEY	24	16	R	N	N

Reference Auth	Subord Auth	ESR #	EO #	OREO #	VI #
		N	N		

Permits Required	HAZ	CUT	EXC	TIE	COR	OTH	RWP	ALARA	Material	Outage
	Y	N	N	N	N	N	A-11	N	N	Y,PRE

Critic	Criticality Engineer	SEL	Process Engineer	Prejob Safety	IRR
N		Y	1-12-88	Y	N

QA Ins	QA Signature	IH&S/OHP	Safety Signature	Job Safety Analysis
Y	1-12-88	Y		N

Planned	PlanDate	PlanPhone	Schedul Start Date	Schedul Compl Date
RA FUQUA	011188	3-4835	Shft	Shft

Released	RelShf	RelDat	Lock-n-Tag		Bypass		
	2	1-13-88	Y/N N	IL RL	Y/N Y	IB MWC	RB

Functional Test: VERIFY THROUGH QC DOCUMENTATION THAT THE BLANKS HAVE BEEN INSTALLED

Work Performed:

installed blanks.

ESR 12564 WILL REMOVE BLANKS AND INSTALL OTHER BYPASS ROUTING

Idle Equipment	Actual Hours	Removed Serial #
	6	

Action Taken	Malfunction	Install Serial #
I	M	

Completed (Craft)	CompDate	Verified By	Verif Dat	Removed Prop #
	1-13-88		1-13-88	

Reviewed By	RevDate	Accepted By	Acc Date	Installed Prop #
	1/13/88			

IEFD Updated	CAD Updated	Closed Out	Closed Date

BLANKS INSTALLED PENDING INCORPORATION at EO

QC INSPECTION

Rockwell Hanford Operations

FABRICATION/INSTALLATION INSPECTION PLAN

8011 012	KP484	Page 1 of 1	
Project No. Purex		QCRN 8011 012	
QA Level ☐ I ☒ II ☐ III		Quantity Two (2)	
Item/Description Fab and Install Blanks on V-160 and V-180 "Valves."	Dwg/Spec No.(s) H-2-65651	Rev. A	FCN No.
Location 202A ASD Sample Pit	Prepared by R. L. Butler		Date 1-12-88

NOTICE: Notify QC for performance of inspection/examination/test, prior to start of work for each hold point.

Check Point	Req'd	Hold Point	Inspection Complete (Date & Stamp)
1. Verify material used is s/stl Comb. 300 Seri.	X		μ Q 78 C RHO 1-13-8
2. Welding of Tab or Plug weld's. Final weld Visual inspect and accept Per HS-BS-0009 "B" AWS D1.3 3.6.1	X		μ Q 78 C RHO 1-13-8
3. Verify installation of Blank at V-160 and V-180.	X	X	μ Q 78 C RHO 1-13-8
4. Verify change entered on I.E.F.D. and Signed off by Process Engi Work Completed. H2-65651	X		μ Q 78 C RHO 1-13-8

A-6700-123.1 (R

D 2070 T
37-8350-010

0024

CAUTION

OPERATION LIMITED TO

SAMPLE PUMP Return line & Floor Drain Valve V-180, Sump pump Valve V-160 Closed. Flow meter & bypass blanked. Do not Flush building or discharge to ASD Header

Signed by M. W. Cline

Date 12-8-87

D 2070 T
37-8350-010

0023

CAUTION

OPERATION LIMITED TO

ASD header blanked.
SAMPLE PUMP Return valve AND Floor Drain Valve V-180 AND sump pump Valve V-160 Closed. Do not flush building or start up ASD System.

Signed by M. W. Cline

Date 12-8-87

posted on door of 295-A

0024

CAUTION

DO NOT REMOVE THIS TAG

Do not USE ASD SAMPLE SYSTEM OR Discharge to ASD Header.

Do not flush in ASD Building (295-A) or caisson (295-AZ).

SEE OTHER SIDE.

posted in CCR panel B-14

0023

CAUTION

DO NOT REMOVE THIS TAG

Do not use ASD Sample System or Discharge to ASD Header

Do not flush in ASD Building (295-A) or in caisson (295-AZ)

SEE OTHER SIDE.

ENGINEERING SERVICE REQUEST

24 Engineering Services Request No. № 1256

COMPLETED BY REQUESTOR

1 Requestor	2 Organization/Cost Code	3 Subactivity Task No.	4 Date Initiated	5 Date Required
J. A. Stahlberg	12214/PPE	K4C11	12-29-87	1-20-88

6 Descriptive Title

Rerouting of ASD Lines

7 Description of services required (including drawing or documents involved, design criteria, and special conditions). Attach additional sheets as required. Provide justification of request.

Reroute lines 2" -W50-203-M9 (sample return) and 1" W209-M9 (sample discharge) to upstream of FM-W50-1-1 (ASD Flowmeter). Design should provide minimal field weld and flex piping. Removal of the flowmeter is a suggested option. Reference Drawing - H-2-65659.

8 Equipment/Facility/System "Design to" Cost

Program Dollars

9 Management Approval - Date	10 Plant Mgr/Bldg. Superintendent - Date	11 Program Engineering
R.S. Paulina for GJL. 29 DEC 87	15 12/29/87 G. T. Dukelson	Approval Date Initial Schedule: Final:

COMPLETED BY ENGINEERING

12 Reviews Required

- ☐ Informal Design Review
- ☐ Formal Design Review
- ☐ Safety Review

13 Estimated Design Cost

Man Hours _____ Functional Dollars _____

14 Q.A. Level

Q.A. RECEIVED D. K. BAILEY

E&OS DEC 30 1987

15 Reviewers

Production Operations _____

Independent Reviewer _____

ACTION _____
ROUTE _____
COPIES _____
FILE _____

Process Eng. _____

Program Eng. _____

Production Support _____

Other _____

16 Engineer's Instructions

No IRR req'd.

21 Document or Drawings Prod

22 Date Completed

23 Estimated Completion Dat

17 Assigned Manager	19 Date Received	25 Prime W.O. No./WBS No.
T. A. McLellan	12-30-87	736013
18 Assigned Engineer	20 Date Assigned	
D. W. Mertz	12-30-87	

WA # 2A-7315011

HRE 060.01PB — Work Authorization — Page 1

IEFD Dwg #	Equip Pc #	How Discovered	DivCod	DivOp	SysCod	SysOp
LIRI	ASD SPECTACLE VALVE	CD	LEF	R	W50	D

Originator	Orig Code	OrigPh	Area	Bldg	I/O	Dir'n Wall	Nd Dt
CLINE	47500	3-3751	200-E	295-A	OUT	NORTH	IN PIT 111287

Task Description: SWITCH SPECTACLE VALVE TO THE OPEN POSITION.
QC VERIFICATION REQUIRED

Note - This change notice has optimized the ASD leak test. We passed change 40 TANK F12.

QC INSPECTION REQUIRED

Work Auth #	Pri	Task Title	Safety	Work Seq. Plan
2A 7315011	1	ASD SPECTACLE VALVE	0	N

Authorized By	Approved By	ServOrg	Mat Cost	LaborCost	TotalCost
DIXSON		52100	$	$	$ 0

ChargeCode	Cross	Next FY	Assigned To	Crft	EstHrs	Type	DayBac	Outside
KP43E	N	N	HOONEY	24	2	R	N	N

Reference Auth	Subord Auth	SSR #	EO #	OREO #	VI #
		N	N		

Permits Required	HAZ	CUT	ERC	TTE	COR	OTH	RWP	ALARA	Material	Outage
	Y	N	N	N	N	N	A-11	N	N	N.

Critic	Criticality Engineer	SEL	Process Engineer	Prejob Safety	IRR
N		Y	D.A. Bruce 11-14-87	X	N

QA Ins	QA Signature	IH&S/OHP	Safety Signature	Job Safety Analysis
Y	11-20-87	Y		N

Planner	PlanDate	PlanPhone	Schedul Start Date	Schedul Compl Date
D.D.MORRISON 11-11-87	111187	3-3634	111287 Shft 3	112087 Shft 3

Released	Rel Shf	Rel Dat	Tag		Bypass		
	2	11/23/87	Y/N	IL	RL	Y/N N	IB RB

Functional Test: QC VERIFICATION/DOCUMENTATION OF COMPLETE JOB

Work Performed: As Per Described.

Idle Equipment	Actual Hours	Removed Serial #
	8 Hr	

Action Taken	Malfunction	Install Serial #
N/A	N/A	

Completed (Craft)	CompDate	Verified	Verif Dat	Removed Prop #
	11-24-87		11/24/87	

Reviewed	RevDate	Accepted By	Acc Date	Installed Prop #
	11/24		11/24/87	

IEFD Updated	RAD Updated	Closed Out	Closed Date
			12-8-87

Rockwell Hanford Operations

FABRICATION/INSTALLATION INSPECTION PLAN

Charge Code: KP481		Page: 1 of 1	
Project No.: Purex		QCRN: 7315 011	
QA Level: ☐ I ☒ II ☐ III		Quantity: ONE	
Item/Description: Switch Spectacle Valve To Open Position.	Dwg/Spec No.(s): H-2-64937	Rev.: 6	FCN No.:
Location: 295-A	Prepared by: [signature]	Date: 11-20-87	

NOTICE: Notify QC for performance of inspection/examination/test, prior to start of work for each hold point.

Check Point	Req'd	Hold Point	Inspection Complete (Date & Stamp)
1. Q.C. To attend Pre-Job Safety meeting and sign-off attendance sheet	X	X	11/23/87 [signature] QC 75 RHO
2. Verify Spectacle Valve switched To The open position. Ref H2-64937 C.-D-11	X	X	11/23/87 [signature] QC 75 RHO

PUREX
CANYON CHANGE ORDER

NO. 87-141

ISSUED BY: A.B. LICHY DATE: 11/9/87

TITLE: REMOTE MAINTENANCE PLANNER

CELL: F

I. DESCRIPTION/PURPOSE

ISOLATE E-F11-2 / ASO STREAM

A. SPECIAL CONDITIONS/REMARKS

(1) REMOVE P-F11-2 PUMP JUMPER AND BLANK ASSOCIATED NOZZLES.

63237

REF. ~~CCO~~ WA# 7313003

B. BLANKING REQUIRED
IF YES LIST UNDER SECTION III CRANE WORK

	INITIALS
YES	
NO	

C. CANYON HEADER(S) TO BE OPENED
IF YES LIST AND COMPLETE AS REQUIRED

	INITIALS
YES	
NO	

	OPENED		CLOSED	
	DATE	INI	DATE	INI

PAGE ____ OF ____

D. LOCK AND TAG REQUIRED
IF YES LIST AND COMPLETE AS REQUIRED

INITIALS
YES [illegible]
NO

TAG THE FOLLOWING "JUMPERS REMOVED PER CCO # 87-141..... E-F11-2/ASD ROUTE OUT OF SERVICE"	APPLIED DATE	APPLIED INI	REMOVED DATE	REMOVED INI
(1) PWR TO D-F11-2	11/9/87	[illegible]		
MCC F11-1 / TAG # 7660	[illegible]	[illegible]		
MCC #14 / TAG # 7661	11-9-87	[illegible]		
(2) FRC-F11-2; F11 left tube bundle steam ASD out-of-service per CCO # 87-141 tag # 7656 7662	11/9/87	[illegible]		
(3) FRC-F11-3; F11 right tube bundle steam ASD out-of-service per CCO # 87-141 tag # 7657 7663	11/9/87	[illegible]		

II. APPROVAL TO INITIATE

[illegible] — 11/9/87
PROCESS ENGINEER — DATE

N/A — DATE
CRITICALITY ENGINEER

[illegible] — 11/9/87
PRODUCTION CONTROL PLANNER — DATE

PAGE ____ OF ____

III. CRANE WORK

A. GENERAL INSTRUCTIONS:

OBTAIN SHIFT MANAGER'S APPROVAL BEFORE THE START OF CRANE WORK COVERED BY THIS CANYON CHANGE ORDER. IF ANY QUESTIONS ARISE AND/OR UNPLANNED CONDITIONS OR CHANGES OCCUR DURING PROGRESS OF THE WORK, CONSULT SHIFT MANAGER FOR APPOVAL TO CONTINUE.

NOTE: ANY CHANGE OR ALTERATION IN WORK SEQUENCE AFFECTING CONTINUITY OF WORK REQUIRES APPROVAL OF THE SHIFT MANAGER WITH DETAIL OF SPECIFIED CHANGE. (CHANGES WILL BE ENTERED, INITIALED AND DATED UNDER SPECIAL INSTRUCTIONS, III. C.)

B. FIRE SAFETY:

1) REQUEST THAT HEAT DETECTOR JUMPER(S) BE ELECTRICALLY BYPASSED, IF THERE IS A SIGNIFICANT CHANCE OF STRIKING THEM DURING ADJACENT CRANE WORK.

2) CALL SHIFT MANAGER/BUILDING DISPATCHER FOR A MANUAL FIRE FOAM DUMP IF A FIRE DEVELOPES IN THE CELL DURING CRANE WORK.

C. SPECIAL INSTRUCTIONS:

_____
_____
_____
_____
_____
_____
_____
_____
_____
_____
_____
_____

C. WORK AUTHORIZATION/RELEASE

[illegible] — SHIFT MANAGER — 11-9-87 DATE

[illegible] — PROCESS ENGINEER — 11/9/87 DATE

JUMPERS/EQUIPMENT TO BE CHANGED	REMOVE		CAD/IED MARKUP		INSTALL		CAD/IED MARKUP		LEAK CHECK
	DATE	INI	DATE	INI	DATE	INI	DATE	INI	
(1) REMOVE "R" TO "N" (H-2-96872) FLEX CONDENSER SPRAY TO DECK STORAGE ✓	11-9	JP			NA				
(2) BLANK NOZZLE "R" ON CONDENSER (2" V) ✓	NA				11-9	JP			
(3) REMOVE F-T108 (H-2-64807) P-F11-2 pump & STORE IN CELL ✓ NOTE: LEAVE F-6123 POWER FLEX MADE UP BOTH ENDS. ✓	11-9	JP			NA				
(4) BLANK F-T108 (3" H) ✓	NA				11-9	JP			
(5) BLANK NOZZLE "P" ON CONDENSER (2" H) ✓	NA				11-9	JP			

CRANE OPERATOR REMARKS:

PAGE____ OF____

IV. CANYON STATUS RESTORED

	YES	NO	INITIALS
A. HEADER(S) RESTORED			
1. LEAK CHECKED			
B. LOCK(S) AND TAG(S) REMOVED			
C. JUMPER(S) / EQUIPMENT RESTORED			
1. LEAK CHECKED			

D. REMARKS:

_____

_____

_____

_____

_____

_____

E. JOB COMPLETION APPROVALS:

SYSTEMS RESTORED, TESTED AND APPROVED AS OPERATIONAL

_____ SHIFT MANAGER _____ DATE

_____ PROCESS ENGINEER _____ DATE

F. REVIEWED BY:

_____ PRODUCTION CONTROL PLANNER _____ DATE

WA # 24-7313-003

MSE 060.015B — Work Authorization — Page 1

IEFD Dwg #	Equip Pc #	How Discovered	DivCod	DivCp	LevCod	Level
H-2-63237	P-F11-2	OT	CYN	N	F11	2

Originator	Orig Code	OrigPh	Area	Bldg	Floor	Cell	Nozzle	Nd D
LICHY	47200	3-2627/200E	202A		------	F	------	1110

Task Description: ISOLATE THE E-F11-2/ASD STREAM PER CCO# 67-141

Work Auth #	Pri	Task Title	Safety	Work Seq. P
24 7313 003	1	ISOLATE E-F11-2/ASD STREAM		7

Authorized By	Approved By	ServOrg	Mat Cost	LaborCost	Total Co
		12120	$	$	$

ChargeCode	CrossCh	Next FY	Assigned To	Crft	SetHrs	Type	DayBac	Outsi
	N	Y	SHIFT MANAGER	I2			N	N

Reference Auth	Subord Auth	ESR #	ED #	CRED #	VI #
		N	N		

Permits Required	HAZ	CUT	EXC	TIE	COR	OTH	RWP	ALARA	Material	Outage
	N	N	N	N	N	N	Y	N		N.

Critic	Criticality Engineer	SEL	Process Engineer	Prejob Safety	IRR
N		Y		N	

QA Ins	QA Signature	IH&S/OHP	Safety Signature	Job Safety Analys
N		N		N

Planned	PlanDate	PlanPhone	Schedul Start Date	Schedul Compl Da
DB LICHY	110987	3--262	111087 Shft 1	111187 Shft 2

Released	RelShf	RelDat	Lock-n-Tag		Bypass		
	3	11-9-87	Y/N N	IL	Y/N N	IE	RB

Functional Test:

Work Performed:

Idle Equipment	Actual Hours	Removed Serial #

Action Taken	Malfunction	Install Serial #

Completed (Craft)	CompDate	Verified By	Verif Dat	Removed Prop

Reviewed	RevDate	Accepted By	Acc Date	Installed Prop

IEFD Updated	CAD Updated	Closed Out	Closed Date