0061189

STA. 5
SEP 0 2 2003

ENGINEERING DATA TRANSMITTAL

Page 1 of 1

1. EDT 637362

2. To: (Receiving Organization)	3. From: (Originating Organization) Closure Projects/Engr Support	4. Related EDT No.: N/A
5. Proj./Prog./Dept./Div.: SST Retrieval Proj/Projects	6. Design Authority/Design Agent/Cog. Engr.: W.T. Thompson	7. Purchase Order No.: N/A
8. Originator Remarks: This document presents a plan to complete a deployment demonstration test and an injection leak test with the HRR long electrode LDM system on a full-scale SST		9. Equip./Component No.: N/A
		10. System/Bldg./Facility: N/A
		12. Major Assm. Dwg. No.: N/A
11. Receiver Remarks:	11A. Design Baseline Document? ☐ Yes ☒ No	13. Permit/Permit Application No.: N/A
		14. Required Response Date: N/A

15. DATA TRANSMITTED

(A) Item No.	(B) Document/Drawing No.	(C) Sheet No.	(D) Rev. No.	(E) Title or Description of Data Transmitted	(F) Approval Designator	(G) Reason for Transmittal	(H) Originator Disposition	(I) Receiver Disposition
1	RPP-17191		0	Test Plan for SST Deployment Demonstration and Injection Leak Testing of the HRR Long Electrode LDM System	ESQ	1	1	1

16. KEY

Approval Designator (F)	Reason for Transmittal (G)		Disposition (H) & (I)	
E, S, Q, D OR N/A (See WHC-CM-3-5, Sec. 12.7)	1. Approval 2. Release 3. Information	4. Review 5. Post-Review 6. Dist. (Receipt Acknow. Required)	1. Approved 2. Approved w/comment 3. Disapproved w/comment	4. Reviewed no/comment 5. Reviewed w/comment 6. Receipt acknowledged

17. SIGNATURE/DISTRIBUTION (See Approval Designator for required signatures)

(G) Reason	(H) Disp.	(J) Name	(K) Signature	(L) Date	(M) MSIN	(G) Reason	(H) Disp.	(J) Name	(K) Signature	(L) Date	(M) MSIN
		Design Authority				1	1	R.E. Bauer	R.E. Bauer	8/18/03	S7-12
		Design Agent F.R. Reich	F.R. Reich	8/18/03	S7-90	1		T.L. Hissong		8-21/03	S7-83
		Cog. Eng.				1		M.R. Koch		8/21/03	S7-83
1		Cog. Mgr. W.T. Thompson	W.T. Thompson	8/20/03	S7-70	4		C.V. Phillips		8/20/03	R3-86
1		QA M.L. McElroy			R2-87	1		M.N. Jaraysi		8/20/03	H6-03
1		Safety R.E. Butler, II		8/18/03	S7-07						
1	1	Env. C.J. Kemp	C.J. Kemp	8-19-03	R1-51						

18.	19.	20.	21. DOE APPROVAL (if required)
F.R. Reich 8/18/03 F.R. Reich Signature of EDT Originator / Date	Authorized Representative for Receiving Organization / Date	W.T. Thompson 8/20/03 Design Authority/ Cognizant Manager / Date	Ctrl No. ____ ☐ Approved ☐ Approved w/comments ☐ Disapproved w/comments

DISTRIBUTION SHEET

To	From	
Distribution	Closure Projects/Engr Support	Page 1 of 1
Project Title/Work Order		Date 9/2/03
RPP-17191, Rev. 0. Test Plan for SST Deployment Demonstration and Injection Leak Testing of the HRR Long Electrode LDM System		EDT No. 637362
		ECN No.

Name	MSIN	Text With All Attach.	Text Only	Attach./ Appendix Only	EDT/ECN Only
CHG					
Bauer, R.E.	S7-12	X			
Dodd. R.A.	S7-83	X			
Grigsby, J.M.	S7-70	X			
Hissong, T.L.	S7-83	X			
Jarayssi, M.N.	H6-03	X			
Kemp, C.J.	R1-51	X			
Koch, M.R.	S7-83	X			
Luke, J.J. (H)	H6-03	X			
McElroy, M.L.	R2-87	X			
Sams, T.L.	H6-03	X			
Schaus, P.S.	H6-03	X			
Thompson, W.T.	S7-70	X			
Myers, D.A.	E6-35	X			
Wittreich, C.D.	H9-03	X			
Phillips, C.V.	R3-86	X			
ORP					
Davis J.J.	H6-60	X			
Noyes, D.L.	S7-83	X			
COGEMA-Engineering	S7-70				
Hanson, C.E.	S7-70	X			
Reich, F.R. (H)	S7-90	X			

Test Plan for SST Deployment Demonstration and Injection Leak Testing of the HRR Long Electrode LDM System.

F.R. Reich
CH2M HILL Hanford Group, Inc.,
Richland, WA 99352
U.S. Department of Energy Contract DE-AC06-99RL14047

EDT/ECN: 637362 **UC:** 2000
Org Code: 7N300 **Charge Code:** 114100
B&R Code: EW01J2040 Total Pages: 41

Key Words: Test Plan, Deployment Test, Leak Test, SST Waste Retrieval, Leak Detection, Ex-Tank, HRR, ERT, Resistivity, SST, LDM,

Abstract: This presents a plan to complete a deployment demonstration test and an injection leak test with the high-resolution resistivity (HRR) long electrode leak detection and monitoring (LDM) technology on a full-scale SST. The SST tank drywells and tank thermocouple will be used as electrodes for the HRR LDM system. The injection test will simulate tank leaks by injecting simulated tank waste under the SST and will provide the leak detection data to quantitatively assess leak detection performance. The deployment demonstration will evaluate the performance of the HRR LDM system in an SST environment during a waste retrieval campaign. These tests will provide the basis for continued use of the LDM system during SST waste retrievals.

TRADEMARK DISCLAIMER. Reference herein to any specific commercial product, process, or service by trade name, trademark, manufacturer, or otherwise, does not necessarily constitute or imply its endorsement, recommendation, or favoring by the United States Government or any agency thereof or its contractors or subcontractors.

Printed in the United States of America. To obtain copies of this document, contact: Document Control Services, P.O. Box 950, Mailstop H6-08, Richland WA 99352, Phone (509) 372-2420; Fax (509) 376-4989.

Barbara Wolski 9/2/03
Release Approval Date

SEP 0 2 2003
DATE: HANFORD RELEASE
STA. 2 ID: 18
Release Stamp

Approved for Public Release

RPP-17191, Rev. 0

Test Plan for SST Deployment Demonstration and Injection Leak Testing of the HRR Long Electrode LDM System

August 2003

F.R. Reich
COGEMA-Engineering
Richland, Washington

Prepared for:
CH2M HILL Hanford Group, Inc.
Richland, Washington

TABLE OF CONTENTS

1.0 Introduction 1
- 1.1 Purpose 1
- 1.2 Background 1

2.0 Deployment Demonstration and Injection Test Objectives, Scope, and Assumptions 3
- 2.1 Test Scope and Objectives 3
  - 2.1.1 Deployment Demonstration Test Scope and Objectives 3
  - 2.1.2 Injection Leak Test Scope and Objectives 4
- 2.2 Assumptions 5

3.0 Deployment Demonstration and Injection Tests 6
- 3.1 HRR Long Electrode LDM Conceptual SST Test Setup 6
- 3.2 Geophysical Resistivity Measurement System 7
- 3.3 Injection Leak Test Setup 8
- 3.4 Roles and Responsibilities 9
- 3.5 Injection Simulant 10
- 3.6 Test Data Acquisition, Processing and Recording 10

4.0 Schedule for Deployment Demonstration and Injection Testing 11
- 4.1 Test Schedule 11
- 4.2 Injection Test Matrix 12

5.0 Deployment Demonstration and Injection Leak Test Issues 13

6.0 Quality Control and Quality Assurance 13

7.0 Responsibility Matrix and Points of Contact 14

8.0 Interfacing Elements 15

9.0 Final Report 15

10.0 References 16

ATTACHMENTS

Attachment 1 - Draft Test Schedule 17

APPENDICES

Tank S-103 Conceptual Deployment of HRR Long Electrode LDM System ..... Appendix A
Tank Waste Injection Leak Simulant ..... Appendix B
Draft Table of Measurement Parameters ..... Appendix C
Injection Test Matrix (Draft) ..... Appendix D

LIST OF TERMS

ADSL	Asynchronous Digital Signal Line
CHG	CH2M HILL
DST	double shell tank
ERT	electrical resistance tomography
gph	gallons per hour.
HRR	high-resolution resistivity
LDM	leak detection and monitoring
LDMM	leak detection, monitoring, and mitigation
MUX	multiplexor
SST	single-shell tank
TBD	to be determined
USQ	Unreviewed Safety Question

Test Plan for the SST Deployment Demonstration and Injection Leak Testing of the HRR Long Electrode LDM System

1.0 Introduction

This document describes a test plan to complete the testing of a high resolution resistivity (HRR) leak detection and monitoring (LDM) method at a single-shell tank (SST). The HRR method has been previously tested and evaluated at the 105A mock tank test site and was identified as a preferred method to use on SSTs during waste retrievals (RPP-10604). There are physical and electrical differences between an SST environment and the test environment at the 105A mock tank test site (PNNL-14192). A comparison of the 105A mock tank data with resistivity measurements made on S-112 identified two main concerns which require further investigation:

- A potential loss of leak detection sensitivity when deployed on an SST and
- An unknown false alarm risk that would falsely shut down the waste retrieval.

This test plan is designed to address these concerns.

1.1 Purpose

A test plan is presented that would complete a deployment demonstration test and an injection leak test on an SST with an HRR long electrode LDM system. The purpose of this SST testing is to:

- Determine the performance of the HRR long electrode LDM system in a full-scale SST environment.
- Data to support developing costs to complete deployment on all S-Farm tanks and for other SST tank farms.
- Provide data to compare leak detection and monitoring performance with the current drywell logging baseline methods.
- Demonstrate that LDM data can be generated to support waste retrieval operations.
- Provide the basis for continued use of the LDM system for SST waste retrievals.

A test plan to provide this performance assessment data with an HRR long electrode LDM system is presented below. This is not intended to be an Operational Acceptance Test of the HRR long electrode LDM system and equipment.

1.2 Background

The River Protection Project waste retrieval projects are responsible for the retrieval and transfer of waste from the SSTs to the Double-Shell Tank (DST) system. This includes providing leak detection, monitoring, and mitigation during waste retrieval.

In January 2000, an Advanced Characterization Workshop reviewed over 20 different leak detection technologies and selected 6 of the most promising methods for further evaluation and

testing. A limited demonstration test was completed in FY 2001 with these 6 methods at the 105A Mock Tank Site in the 200 East Area of the Hanford Site (PNNL-13818). In January 2002, a workshop and Value Engineering exercise selected three of the 6 methods for further development and testing. This selection was based on a comparative evaluation that included safety, schedule, cost, technical maturity, and potential for leak detection performance (RPP-10604). The three selected methods were an HRR long electrode method (HRR steel case resistivity LDM method), an electrical resistance tomography (ERT) point electrode method, and an ERT long electrode method.

A multiple-injection leak performance test was completed in FY 2002 to FY 2003 (FY 02-03) at the 105A mock tank test site (PNNL-14192). Leak performance data was obtained with the HRR and ERT long electrode methods and with the ERT point electrode method by injecting waste simulant under the 105A mock tank. The leak rates and leak volumes for this multiple injection cycle test were based on tank historical leak data. The assessment of the performance data indicated that the HRR long electrode LDM method had the best potential for providing improved LDM on an SST. This decision was based on the leak detection performance of the HRR long electrode LDM method and on the potential ability to use existing tank infrastructure as electrodes. An SST deployment would use existing tank drywells as long electrodes and the tank thermocouple as a "mise-a-la-masse" electrode (the literal translation is "method of the mass."). The "mise-a-la-masse" method uses an electrode in the fluid being monitored for leaks as part of the resistivity measurement.

In FY 2002, resistivity measurements were made on tank S-112 using a similar geophysical resistivity measurement system as used at the 105A mock tank test site. This resistivity data, when compared with the resistivity data from the mock tank test site, indicated that an SST could have a reduction in leak detection sensitivity (on the order of 3 to 5) compared with the 105A mock tank test site. The source of the degradation was tentatively identified to be from SST subsurface conductive infrastructure that includes the tank's buried electrical conduit, piping, and tank farm cathodic protection systems, etc. (PNNL-14192). These conductive elements shunt leak measuring current away from the desired measurement volume under a tank, reducing potential leak detection sensitivity. In addition, a tank-to-tank resistance measurement indicated that S-112 was also electrically connected to the adjacent SSTs (and to potentially all other tanks in the tank farm). For an SST, the result would be a reduction in sensitivity to resistivity changes from leaked tank wastes. It was also surmised that the electrical noise sources from waste retrieval and tank farm systems (motors, pumps, etc.) could further degrade performance and increase the potential for false alarms.

On July 30, 2003, a workshop was held with Ecology to review and discuss objectives and expectations for SST LDMM. The workshop addressed each of the objectives and issues that were outlined in a June 2, 2003 letter from Ecology (Lyon) to ORP (Rasmussen). The scope and objectives in this test plan address the LDMM objectives that were identified and approved by the work shop participants.

Based on the S-112 resistivity measurements and the 105A mock tank test results, it was recommended that the HRR long electrode LDM method be tested on a full-scale SST. A deployment demonstration during an SST waste retrieval was recommended to demonstrate the ability to operate within an SST environment and the ability to integrate, deploy, and operate with the waste retrieval system. An SST injection test, where known volumes of waste simulant were released under a tank, was also recommended as this test would provide the calibration data needed to quantitatively assess leak performance and to update a data processing model/protocol for future SST deployments. This quantitative leak data is needed to assess the LDM system performance as required by DOE and Ecology.

2.0 Deployment Demonstration and Injection Test Objectives, Scope, and Assumptions

2.1 Test Scope and Objectives

The objective is to complete a deployment demonstration test and an injection leak test with the HRR Long electrode LDM system on an SST. The deployment demonstration would be completed during a waste retrieval campaign. The injection leak test would evaluate leak detection performance by simulating tank waste leaks at an SST. These tests would provide

- Data to define and compare performance and cost of the HRR system to the current baseline ex-tank LDM methods. .
- Data to evaluate the potential to generate 2-dimensional (and potentially 3-dimensional) images to support leak location and tracking.
- Documentation needed to support this SST deployment and to facilitate future SST deployments (safety assessments, design documentation, operational procedures, etc. prepared in a manner that maintains document retrievability and traceability).

2.1.1 Deployment Demonstration Test Scope and Objectives

The deployment demonstration and injection tests will be full-scale SST tests with the HRR long electrode LDM system using existing tank drywells and the tank thermocouple as electrodes. The system design should also include a limited number (less than 30) of surface electrodes to support leak detection and tracking. These features would be included only to the extent that they would not impact the design and performance of the HRR long electrode LDM system. The deployment demonstration test objectives include:

- Demonstrate operation within the full-scale SST environment (electrically connected infrastructure) and with the waste retrieval system. Design, installation, checkout and operation of an HRR long electrode LDM system that uses long electrodes, "mise-a-la-masse" electrode, and surface electrodes. This would demonstrate use of SST drywells as long electrodes and tank thermocouple as the "mise-a-la-masse" electrode (electrical connection with the tank waste) with an HRR long electrode LDM method.
- Integrate the LDM system with the waste retrieval system (potentially uses waste retrieval cable trenches, control trailer space, utilities, and other "existing" features as appropriate).

- Acquisition, processing, and archival of other data including environmental data (rainfall, temperature, snowmelt), waste retrieval data (identification of what and when systems are operating), surface spills/leakages, etc. that may impact performance of the resistivity based HRR long electrode LDM system. Complete baseline gamma and neutron moisture probes in parallel with the HRR long electrode LDM testing for potential performance comparison.
- Development and testing of a data processing model/protocol that uses leak data to assess leak/no-leak status and to estimate leaked volumes. Data would be processed for leak status and volume estimates. The HRR long electrode LDM data would be analyzed for the presence of leaks and the leaks reported to waste retrieval. This leak data would not be used as a critical leak input for waste retrieval process control during the waste retrieval campaign. However, the data would be analyzed for the presence of large leaks that have a very low false alarm potential. This is required until the HRR long electrode LDM system performance is verified and validated in an SST injection leak test.
- Obtaining approvals for the SST system deployment, including the resolution of safety and hazards issues when using drywells and tank thermocouple as electrodes. Complete data acquisition, archival, processing/assessment, and reporting that establishes the performance of the LDM methods.
- Prepare documentation to support continued use on other S-Farm SST waste retrievals. The design, authorizations, safety assessments, installation and operational procedures, work packages, and other supporting documents required to complete this testing are expected to provide a basis for future SST deployments.

2.1.2 Injection Leak Test Scope and Objectives

The HRR long electrode LDM system for this test would be a similar system to that used for the deployment demonstration test. The test setup would include a leak injection system that would simulate known tank leak events with a simulated tank waste. A test matrix (discussed later) would provide data to assess the LDM system's performance. The assessment would be supported by the performance data from the FY 02-03 105A mock tank testing. The injection leak test scope and objectives include:

- Provide calibrated leak performance data to qualitatively and quantitatively evaluate leak detection performance
  - Confirm how small a leak can be detected with a 95% probability of detection and a 5% probability of false alarm (95/5) within a four-week retrieval campaign.
  - Determine the time to detect and declare a leak (leak detection) for at least two test leak rates.
  - Determine the time required to quantify (leak monitoring) a leak rate for at least two test leak rates.
  - Identify the tank quadrant a leak is coming from using two dimensional resistivity imaging models.

- Provide calibrated leak performance data to develop processing model/protocols for future SST deployments. Obtaining data to revise (calibrate) the data processing model/algorithm for use in future SST deployments.
- Acquisition of permits, authorizations, and approvals for the injection system (injection well, etc.) and injection fluid.
- Design, installation, checkout, operation, and decommissioning of a leak injection well and a fluid pumping/metering system for the leak injections.

During this injection testing the HRR long electrode LDM measurements would be made in parallel with the baseline neutron moisture logging methods. Because the simulated waste is not radioactive, only the neutron probe would be used during this leak injection testing.

2.2 Assumptions

This test plan assumes the following:

- The HRR long electrode LDM SST system will use the tank drywells as long electrodes and the tank thermocouple as the "mise-a-la-masse" electrode. A number (the number would be determined in the system design, but would not exceed 30) of surface electrodes will also be deployed to assist in leak tracking. Data from the surface electrode and data for an ERT long electrode LDM method would be recorded with the limitation that there would be no impact on the HRR long electrode LDM system's deployment and leak performance.
- The baseline ex-tank LDM measurements will be performed in parallel with the HRR long electrode LDM system. This will include gamma and neutron moisture probe measurements during the deployment demonstration. Only neutron moisture probe measurements will be recorded during the injection leak test as the waste simulant will not be radioactive.
- The specific volume of interest for SST ex-tank leak detection is the cylindrical volume under the tank, between the tank's drywells.
- The data from the injection leak testing and the data from the prior performance testing at the 105A mock tank test site will provide the quantitative data to satisfy the intent of the 95/5 (95% probability of detection and 5% probability of false alarm) criteria for leak detection performance.
- The SST for the deployment demonstration and injection leak testing will be tank S-103. The injection testing is assumed to be completed after the deployment demonstration using the same HRR long electrode LDM system and surface electrode components. The use of S-103 for the injection leak test will be re-assessed if the tank leaks during the previous deployment demonstration test.
- Authorizations and permits for the injection well, waste simulant, and test leak volumes will be obtained assuming that safety issues and hazards (electrical shock hazard, flammable gas, surface spill potential, etc.) associated with using tank drywells and thermocouples as primary electrodes can be resolved without impacting resistivity system performance.

- The waste retrieval system installed on the S-Farm will provide support infrastructure and utilities including electrical power, HLAN drop, and equipment and operator space for the HRR long electrode LDM system. The S-Farm waste retrieval control trailer may also provide the control system operating space and utilities for the injection leak system.
- All test data (resistivity data) from the deployment demonstration and injection leak tests will be recorded and archived. Leak data processing will initially use a data processing model/protocol based on the cold testing completed at the 105A mock tank test data and the baseline resistivity data obtained prior to initiation of waste retrieval. However, this data processing model/protocol may be revised mid-test during waste retrieval campaign from an assessment of test conditions and the manner in which the HRR LDM system is performing.

3.0 Deployment Demonstration and Injection Tests

3.1 HRR Long Electrode LDM Conceptual SST Test Setup.

The HRR long electrode LDM system for the deployment demonstration and the injection leak testing will be based on the LDM systems that were used during the FY 02-03 performance testing (PNNL-13818). Figure A-1 in Appendix A illustrates how the tank drywells will be used as long electrodes and the tank thermocouple as the "mise-a-la-masse" electrode. The remote reference electrodes are paired with these "tank electrodes" and connected to either the geophysical system "driver" (Tx) or the "receiver" (Rx) measurement component. To simplify potential flammable gas safety issues, the tank thermocouple connection could only be used with the "receiver" where no power is applied. The "receiver" is a low voltage, high impedance device that should simplify the safety issue resolution for a flammable gas assessment.

The surface electrodes (not shown in Figure A-1) would also be installed on the SST. The 105A mock tank test site contained two orthogonal lines of surface arrays that extended beyond the mock tank in a north-south direction and in an east-west direction. Resistivity data was recorded from approximately 15 surface sensors for the duration of the testing. For these SST tests, the location and number of surface electrodes will depend on a number of factors, including:

- Potential impact on the HRR long electrode LDM system operation and performance.
- The available surface space around an SST. An example of the components that may be located on a tank during waste retrieval is shown in Figure A-3 of Appendix A. There are additional conductive features and infrastructure (buried electrical conduit, etc.) that are not shown.
- The available multiplexor channels on the geophysical resistivity system. The time to acquire a resistivity data set is directly proportional to the number of electrodes connected to the resistivity measurement system and the "averaging" needed to obtain stable resistivity data. .

- The desired vertical and horizontal resolution and range. A "rule of thumb" is that the sensing depth of a linear array is approximately 1/3 of the array's total length. The horizontal and vertical resolution is a function of the number of sensors in the array (sensor density). The range of interest for tracking a leaking plume under an S-Farm SST is between 45-ft (below grade) and the end of the drywells (about 120-ft below grade).

A concept deployment of the HRR long electrode LDM system on tank S-103 is shown in Figure A-2 in Appendix A. The geophysical measurement, control, and data acquisition system modules would be located in the S-Farm SST waste retrieval operations trailer. This trailer would provide electrical power, HLAN connection, and space for the LDM equipment and operator. Two remote reference electrodes are shown (located west and south of the control trailer) at a distance that is on the order of 10 times the largest separation between the long electrodes (drywells) on S-103. The in-farm LDM system components would be integrated with the S-Farm waste retrieval system. Surface electrodes (not shown) would potential be located inside and outside of the S-Farm perimeter fence.

The LDM measurement system components would be connected to the "tank electrodes" (drywells and tank thermocouple) with electrical cables and junction boxes. The "first" electrical cable(s) from the control trailer would be located in the existing waste retrieval "Trendway" cable trench and would terminate inside the tank farm in a permanent junction box located at the end of the cable trench. The "second" cable would be a surface located cable that connects this permanent junction box to a moveable junction box located over the tank to be retrieved. As illustrated in Figure A-3 in Appendix A, the "third" cable consists of multiple surface located cables that connect this moveable junction box to the tank drywells and thermocouple. All surface deployed cable would be protected with cable protectors ("yellow-jacket" cable protector is currently being used at Hanford) where there are vehicle traffic lanes that cross these cables.

During testing, the baseline gamma and neutron moisture probes will be used to obtain drywell measurements. A conceptual drywell electrical connection that would not obstruct the drywell opening is shown in Figure A-5 of Appendix. A. The "tapped" screw in the end of the steel casing would make the electrical connection to the drywell (1/4 inch thick drywell casing wall). A strain relief would protect this electrical connection if the cable were forcefully disturbed. The strain relief could be attached to a rod driven into the ground beside the drywell if there are issues with drilling/attaching to the drywell concrete skirt.

3.2 Geophysical Resistivity Measurement System

The HRR long electrode LDM system would be based on the geophysical resistivity measuring system that was used at the 105A mock tank site for the FY 02-03 performance testing. For discussion purposes, two conceptual block diagrams showing different features of the equipment are shown in Figures A-6 and A-7 of Appendix A.

The geophysical resistivity components interface to the electrodes through multiplexors (MUXs) as indicated in Figure A-6 ("sensors") and Figure A-7 ("electrode array"). The number of channels (and multiplexors needed) will depend on the number of electrodes (long electrodes, mise-a-la-masse electrode, remote reference electrodes, and surface electrodes). All of the resistivity measuring components, including the power conditioning components, would be located in the S-Farm waste retrieval control trailer.

Figure A-7 also shows a conceptual computer control system that has an HLAN connection to allow remote access and control (not shown in Figure A-6). For the FY 02-03 performance testing, a Category 3 arrangement, normally associated with digital telephony, was used. This network relies on digital telephone access that is readily available throughout the Hanford Site. It uses the Asynchronous Digital Signal Line (ADSL) technology to provide network capability to the remote host. The HLAN system allows access to recorded resistivity data and minor programming changes to be made from any computer location that is approved for logging on to the system.

3.3 Injection Leak Test Setup

The injection leak test would be completed using the HRR long electrode LDM system setup for the deployment demonstration testing. The data processing protocol for this leak injection testing would be based on the S-103 data processing protocol and the data from the previous SST deployment demonstration test. The injection leak system will release known volumes of test liquid while the HRR long electrode LDM system is recording and processing resistivity data.

Although not shown on the test layouts shown in Appendix A, an injection well would be installed between two tank drywells. The well would be located between two drywells and the tank in a relative open and clear area. One concept for the well would be a vertical injection well with two release elevations. One leak release point would be at an elevation just below the tank bottom that would simulate a tank edge leak. The second release point would be at a lower elevation to simulate a leak from a tank bottom location. The well location and fluidic design details would be determined in the design and used as input for test permitting activities. The drilling methods that were used previously in the S-farm vadose zone investigations (vadose zone sampling, etc.) would be considered for this installation. An option to "perforate" an existing drywell and use it as an injection well would also be considered.

The fluid injection system would be based on the fluid injection system (and lessons learned) from the FY 02-03 performance testing at the 105A mock tank site (PNNL-14192). A conceptual fluid injection system shown in Figure A-4 (Appendix A) includes a liquid reservoir, fluid pumps, flow/flow totaling sensors, valves, and piping to connect to the injection well. This concept used a metering pump and flow/flow totalizing sensors to monitor the injected leak volume. A data acquisition (logger) system was used to monitor and record fluid

flow, total volume, and temperature. The fluidic system would be designed to limit spill damage to the environment. Approvals, authorizations, and permits would be needed for the installation of the injection well, fluid injection system, and for the simulant leak injections.

3.4 Roles and Responsibilities

The strategy for completing this work scope includes the use of experienced contractors and on-site CHG and Hanford resources. The plan is to use contractors to provide the HRR long electrode LDM system and the injection leak test system and equipment. This requires approval of design features associated with interfaces and with the functions of these systems. Approval of the design details within each system would not be required.

The management, technical oversight and direction for this testing will be provided by CHG. A contractor would provide the HRR long electrode LDM system (Conceptual system designs are shown in Figures A-6 and A-7 of Appendix A) as a "drop in" system that interfaces with space, and electrical power in the S-103 waste retrieval control trailer. This contractor would have previous experience with an HRR long electrode LDM system and its past deployments at Hanford. This "drop in" system includes geophysical resistivity measuring components, a control system and operating program, data acquisition and processing system, and required power conditioning. The contractor will provide the documentation for this system needed for tank farm interfacing and to support the resolution of hazards assessments, resolution of safety issues design, and acquisition of test permits. The contractor would operate the HRR long electrode LDM system and would process its data to identify leak status, estimate leak volume, and generate resistivity images. The contractor will provide a computer based control and data acquisition system for recording and archiving resistivity data and the HLAN connection for remote access.

A contractor would provide the design, system hardware, technical supporting documentation for the balance of the electrode equipment that interfaces with the HRR long electrode LDM system in the control trailer. This includes electrodes, electrode connectors, electrical cables, junction boxes, etc. required for the HRR long electrode LDM system. A contractor would also provide a injection leak system as a "drop-in" system that would leak known volumes of simulant under an SST to simulate tank leaks for the injection leak testing. This work scope will require a close interface with the S-103 retrieval system, with the HRR systems supplier, and with the CHG technical representative. This contractor will also provide technical assistance in the development of documentation required for authorization basis, HAZOP, and flammable gas assessments for the deployment demonstration system and for the leak injection test system.

3.5 Injection Simulant

The simulant should be environmentally benign yet have electrical and physical properties similar to that of the liquid waste constituent. It should migrate and spread in the soil in a manner similar to the liquid constituent of tank waste.

The simulant that was used at the 105A mock tank test site testing was a 36% solution (by weight) of sodium thiosulfate pentahydrate, as indicated in Appendix B (RPP-10904). According to an MSDS (material safety data sheet), the use of personnel safety equipment is not mandatory with this compound. The only problems encountered at the 105A mock tank test site were due to the sodium thiosulfate's corrosive properties (this is a sodium based salt and should have a similar impact on tank farm infrastructure as leaked tank wastes) and its tendency for precipitates to form when the solution temperature dropped (PNNL- 14192). Its use during cold weather may require a heated fluid injection system similar to that used at the 105A mock tank site tests.

Appendix B presents conductivity data for actual waste material from S-102. A comparison of waste constituents from the TWINS Best Basis Summary show that similar waste constituents and properties are expected from S-103. The assessment also indicates that a lower concentration of sodium thiosulfate solution may better represent the conductivity of the S-102 and S-103 retrieved wastes. However, this may impact the use of the LDM system performance test data from the FY 02-03 105A mock tank testing.

A waste simulant assessment will be completed and a simulant will be identified for injecting in the SST injection well. The simulant will represent the waste expected to be generated during an S Farm tank retrieval.

3.6 Test Data Acquisition, Processing and Recording

The deployment demonstration test and the injection test data will be recorded and archived for future use and will also be processed for leak status (leak/no-leak), used to estimate leak volume, and used to update the data processing model/protocol for future SST deployments. The data will also be used for constructing 2-dimensional images that show leak position and leak plume propagation. All of the raw data and processed data will be recorded and archived.

A system daily log will also be maintained to record the system status and other information related to the test environment and test systems. The log entry frequency will be related to changes in the system status but will contain at least one daily entry. System configuration modifications and changes will be identified and noted in the data log.

Appendix C shows examples of the test data to be recorded. The measurement parameters will be evaluated and revised during the system design activities and a more detailed matrix of measurement parameters identified. Data will be recorded to support:

- Characterization of the performance of the resistivity based LDM system, including completing leak/no-leak assessment using a data processing model/protocol. An initial reporting interval for leak/no-leak is estimated to be 12 to 24 hour interval (subject to change, based on model/protocol needs and performance assessment needs).
- Estimation of Leak volume(s) using a data processing model/protocol.
- Construction of 2-dimensional resistivity (and potentially 3-dimensional data if there is sufficient useful data to support this assessment) images from the electrode resistivity data to demonstrate leak location potential. The number/frequency of this imaging is currently TBD (minimum of one pre-leak and post-leak images) and will also depend on the leak status during the deployment testing.
- Installation and setup data may include geophysical and soil parameters at mock tank and S-103 locals, tank and drywell dimensions.
- Equipment maintenance and failure data (including down time, etc.).

The electronic formats for data archival will be identified during the design of the test systems. Data backup will also be identified to ensure integrity and continuity of test data. Data will be recorded for activities that include:

- System checkout and testing
- Pre-waste retrieval baseline data
- Waste retrieval data
- Post waste retrieval baseline
- Injection test data from simulated waste leak injection system.

4.0 Schedule for Deployment Demonstration and Injection Testing

4.1 Test Schedule

A draft test schedule is shown in Attachment 1. This is an aggressive schedule that involves a first-of- kind deployment on an SST with a new LDM system concept. The activities in the schedule are driven by and interface with the S-103 waste retrieval campaign schedule.

The approvals and permits for the system deployment on S-103 and for the injection test system and injection releases are critical lead activities. The system for the deployment demonstration test will be installed, checked out, and baseline data recorded prior to the start of the S-103 waste retrieval campaign. Data will be recorded and processed during the S-103 waste retrieval campaign.

The HRR long electrode LDM system will also be used for the injection leak testing on S-103. A more detailed schedule will be developed for the injection testing after injection system and injection fluid approvals are obtained. The conductivity of the injection well is expected to have some impact on the baseline resistivity data. Therefore, pre-test or baseline data will be re-taken and then the leak testing will then be completed.

After the testing is completed the injection leak system components will be decommissioned, retrieved, and disposed of. The HRR long electrode LDM system will remain installed and will be available for LDM with future SST waste retrieval campaigns that are not shown on this draft schedule.

It is anticipated that this draft schedule will be revised based on changes within the S-103 waste retrieval project and on activities needed to complete the deployment demonstration and injection leak tests.

4.2 Injection Test Matrix

The purpose of the injection testing is to obtain quantitative data from which the performance of the LDM system(s) can be assessed and to obtain calibrated leak data for revising data processing model/protocol(s). Data is desired that is most representative of the conditions anticipated when a tank leak might occur during a waste retrieval campaign. These and other issues related to an injection leak test matrix are discussed in Appendix D.

Conceptually, the test matrix will have a minimum of 3 injection cycles at two different injection rates (10-gph and 20-gph). This is currently based on the need to establish the slope of the calibration curve that requires at least two injection rates and the need to obtain statistical performance by repeated injections. These two injection rates were also used in the previous 105A mock tank testing. The ability for the LDM system to record data on a near-continuous basis will be used to determine time to detection and assess the leak detection threshold level.

An injection test over a 12 week time interval is also shown on the schedule in Attachment 1. This is the approximate time to complete 3 injection cycles at 10 and 20-gph leak rates and leak 5,000 gallons during each injection at each leak rate. The actual test time will depend on the injection rates and the injection volumes and the performance of the LDM system. The testing would be run in an interactive manner where a test would be terminated early if sufficient data is obtained before completing a projected injection leak cycle. Pre-test time to obtain baseline data prior and after the injection leak tests is not shown on the schedule. .

Details of the test matrix will be developed based on testing needs and on limits that would be established by permits and authorizations obtained for the injection well and the injection leak fluid. The test matrix will strive to minimize the injected fluid but also maximize the data for verifying and validating leak detection performance. Currently it is estimated that a permit for a 30,000-gallon total test volume would allow threshold and quantitative data to be obtained at the two release elevations and latitude within the testing, based on the leak detection performance.

5.0 Deployment Demonstration and Injection Leak Test Issues

There are a number of issues to be resolved before initiating the deployment demonstration and injection testing campaigns.

A hazards assessment is needed that will include assessment and resolution of potential electrical shock hazard (step potential). The initial hazards assessment that was initiated in FY 02 will be revised and expanded to include the injection leak testing. The safety issues that were identified include a potential for an electrical shock. The injection leak testing also has a potential spill issue from the fluid injection system.

There is a flammable gas concern for the planned electrical connections to the tank's drywells and tank thermocouple. The assessment of flammable gas tank hazards for SST tank waste is currently being revised that will have an impact on the resolution of any flammable gas issues. This is currently not considered to be a major issue for an SST deployment as there are several possible approaches to resolution, including limiting the tank thermocouple connection to a "listen only" mode.

Approvals, permits, and authorizations are needed for injection wells and waste simulant. If the deployment demonstration and injection leak tests are outside of the current Authorization Basis, an unreviewed safety question (USQ) review must be initiated. Regulatory approvals and permits are needed for the injection well and for the volume of simulated waste to be injected during the testing.

The draft schedule in Attachment 1 shows the key permitting and safety assessments as lead activities for the tank S-103 deployment demonstration and leak injection testing. This scope of work will be completed with the help from contractors. A timely and potentially early contract placement is needed to support the aggressive schedule.

6.0 Quality Control and Quality Assurance

The quality control and quality assurance for this deployment demonstration and injection leak testing will meet CH2M HILL (CHG) quality assurance requirements. As required in HNF-IP-0842, volume 11, section 2.4, these requirements will be passed on to contractors and other resources that are outside of CHG organization.

Quality assurance and control will be applied in a graded manner and will be applied to all tasks and activities. A documentation and approval process will be identified and used for configuration control of the test systems and test configurations, test schedules and matrixes, and for data acquisition, and data processing activities. The procedures and approvals needed to implement any changes will be identified. CHG will have final approval authority (see responsibility matrix below).

Calibration requirements will be applied in a graded manner. The sensors and measurement systems that are critical to the validation and verification of the LDM systems will be identified and their calibration requirements identified in the system design documents and test implementation plans. Appendix C shows an example of some of the measurements that may require calibrated sensor systems.

7.0 Responsibility Matrix and Points of Contact

The deployment demonstration testing and injection leak testing will be completed using contractors, Hanford crafts, and CHG technical personnel. CHG will review and approve system designs and interfaces prior to proceeding with construction and installation. The Hanford site technical staff will complete the installation of in-farm and ex-farm hardware and components. Contractors will provide the following:

- HRR long electrode LDM system hardware, hardware maintenance, operation, and leak data acquisition and processing.
- Balance of system components including hardware for electrodes and cabling and fluidic injection system hardware, operation, and data acquisition.

The specific CHG points of contact for this testing at S-103 include the following:

Project Manager	R.E. Bauer, CHG
Project Engineering	W. T. Thompson, CHG
Project Engineer	F.R. Reich, COGEMA-Engineering
Design Authority	W.F Zuroff, CHG
Systems Engineer	J.F. Renholds, CHG
Quality Assurance	J.F. Bores, CHG
Safety	R.E. Butler, III, CHG
Environmental Safety and Health	P.C. Miller, CHG
Systems Operations	D.J. Saueressig, CHG

8.0 Interfacing Elements

A close interface will be maintained between the CHG technical staff and the contractors to exchange technical and schedule information. The Technical Coordinator will be responsible for the physical interfaces with the S-farm infrastructure and the S-103 waste retrieval system. To conserve resources, some meetings will be made via telephone conferencing.

This leak detection and injection test system will be integrated with the SST waste retrieval system deployed on S-Farm to retrieve waste from an SST. The details of the system interfaces will be further defined and detailed in a conceptual design and test implementation plan. Some of the major interfaces include the following:

- Electrode connections to the SST drywells and tank thermocouple (electrical contact with the tank waste).
- Ex-tank area (south and east of S-Farm) for remote reference electrodes (and cables).
- S-Farm waste retrieval operations trailer (equipment and operator space, electrical power, HLAN connection, etc.) where HRR LDM and the data acquisition/control system for the injection leak system components will be located.
- S-Farm waste retrieval operations "Trendway" cable trench.
- Junction boxes and above ground cabling located within the S-Farm.
- Ex-tank location for the injection leak system (reservoir, piping, pumps, etc.)
- Injection well, injection system, and injection fluid piping.

9.0 Final Report

A final report summarizing the test setups, installations, test data, and LDM performance assessment will be prepared. The report will address the following areas:

- Recommended path forward for future SST deployments based on LDM performance and on its ability to meet baseline LDM capability requirements.
- Summary and descriptions of the data processing model/protocols, especially for future SST deployments.
- Equipment setups/designs to be used in future SST deployments.
- The resolutions for the safety issues (specifically flammable gas and step potential) and identification of any new issues encountered during installation, operation, and decommissioning.
- Summaries of the test setups, test matrix, final test schedules, etc.
- Summary of test data and injection leak performance assessment, including:
    - Threshold detection levels
    - 95/5 performance parameters.
    - Time to detect leakage
    - Comparison of performance against gamma and neutron drywell moisture logging and between various resistivity LDM methods

- Potential relevance of the LDM data to final closure needs for the SST that was retrieved and for future retrievals.

This final report will also include a description of the data and the processed data that was recorded and archived.

10.0 References

RPP-14606, Rev.0, 2003, Reich, F. R., *Performance Test Assessment of HRR-SCRT, ERT-PET, and ERT-LET Ex-Tank Resistivity Leak Detection Methods – Fiscal Year 2002-2003*, CH2M HILL Hanford Group, Inc. Richland, Washington.

PNNL-13818, Bennett, D. B., et., al., 2002, *Results of Tank-Leak Detection Demonstration using Geophysical Techniques at the Hanford Mock Tank Test Site-Fiscal Year 2001*, Pacific Northwest National Laboratory, Richland, Washington.

RPP-10604, Rev.1, August 2002, Boger, R.M., *Ex-Tank LDMM Technology Assessment and Down Select Report*, CH2M HILL Hanford Group, Inc. Richland, WA.

PNNL-14192, Barnett, D.B., et. al., *Results of Performance Evaluation Testing of Electrical Leak-Detection Methods at the Hanford Mock Tank Site – FY 2002-2003*, January 2003, Prepared for the U.S. Department of Energy by Pacific Northwest National Laboratory, Richland, WA.

RPP-10904, Rev. 0, Boger, R.M., Ex-Tank LDMM Performance Evaluation Test Specification, July 2002, CH2M HILL Hanford Group, Inc. Richland, WA.

Attachment 1 Draft Test Schedule

ID	Task Name	Start	Finish
1	LDMM Vendors Provide Equip	5/20/03	5/20/03
2			
3	SOW Definition & Approval	6/30/03	12/9/03
4	Draft Deploy Test Req & Specs	7/1/03	8/29/03
5	Prepare SOWs	7/1/03	7/31/03
6	Def Perf & Data Requirements	10/1/03	10/31/03
7	Provide Contract Oversite	9/1/03	10/11/04
8	Define Test Req & Specs	10/1/03	10/31/03
9	Place Subcontracts	9/1/03	10/31/03
10	System Design	9/29/03	10/28/03
11	Review & Finalize Design	10/29/03	11/11/03
12	Vendor procure/fab equipment	10/29/03	12/9/03
13	CHG Prepare/review & Release NOC	9/29/03	10/17/03
14	ORP Review & Approve NOC	10/20/03	10/31/03
15	WDOH Perform Completeness Review of NOC	11/3/03	11/14/03
16	WDOH & EPA Review & Approve NOC	11/17/03	12/9/03
17	Safety Evaluation & USQ Screening	11/17/03	12/12/03
18	Complete Safety Assessment	11/17/03	1/15/04
19	Prepare ECNs 7 Work Packages	1/19/04	2/25/04
20	Installation of System	3/22/04	4/21/04
21	Baseline Data Acquisition	6/7/04	7/1/04
22	Fluidic System Fabricate & Checkout	6/8/04	7/6/04
23	Vendor & CHG Test of Fluid System	7/12/04	7/30/04
24	CHG Tech Support During Operations	7/1/04	8/31/04
25	Vendor Data Processing & Leak Ass	7/1/04	8/31/04
26	Prepare Demo Test Report	8/30/04	10/1/04
27	Vendor Prepare Demo Test Report	9/1/04	10/1/04
28	Decision Path Forward	2/3/05	3/16/05
29	DOE Injection Permit	10/1/03	12/15/03
30	SOW for Injection Well/drilling	2/23/04	3/24/04
31	Place Drilling Contract	3/29/04	5/17/04
32	Install Injection Well	5/17/04	6/9/04
33	Install Fluid Injection System	5/17/04	6/9/04
34	Complete Injection Test	9/1/04	12/31/04
35	Complete Injection Test Report	12/31/04	2/11/05
36	Decontamination Test System	12/31/04	1/31/05
37	Equipment Recovery	12/31/04	1/24/05
38	Site Cleanup	1/24/05	2/7/05
39			
40	S-103 ECNs	1/23/04	4/2/04
41	S-103 System Installation	4/22/04	5/19/04
42	S-103 Operator Training	4/26/04	5/18/04
43	Perform S-103 OTP	5/19/04	6/1/04
44	Complete S-103 Waste Retrieval	7/1/04	8/31/04

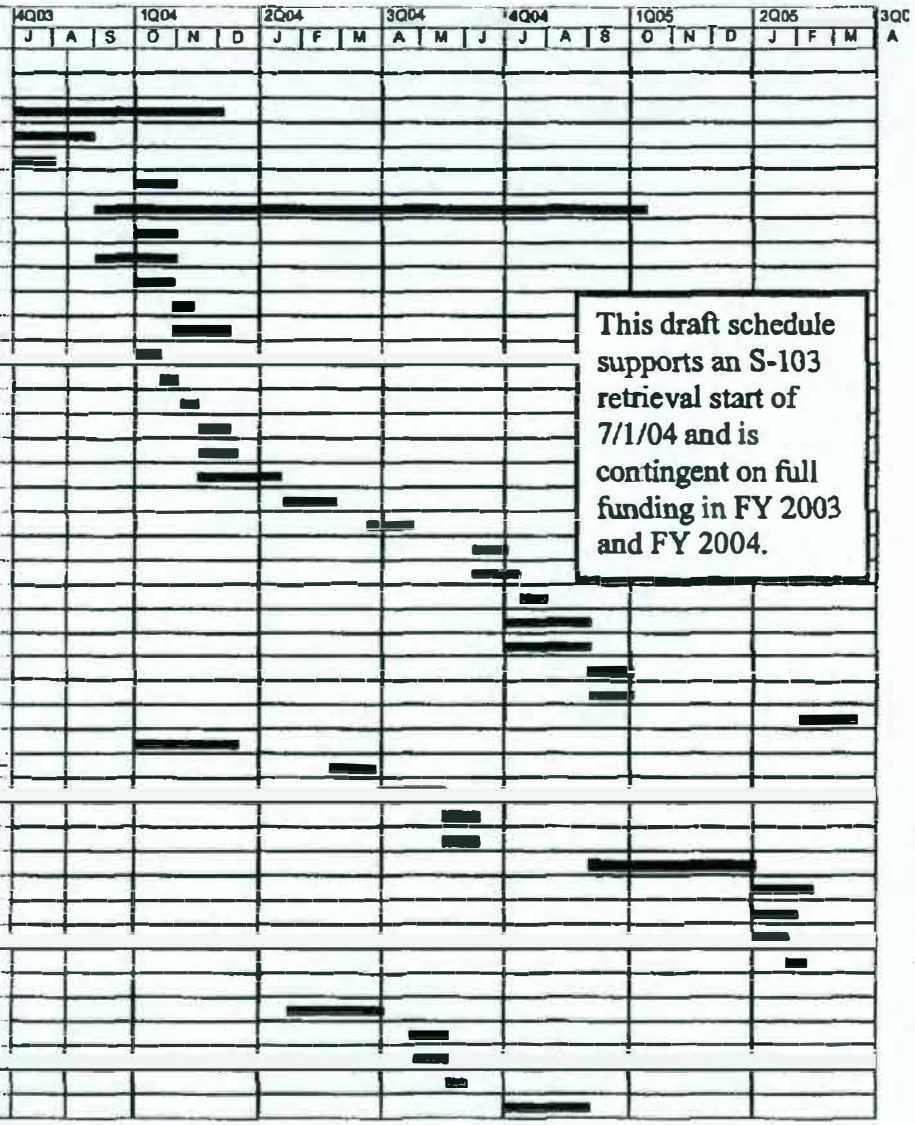

This draft schedule supports an S-103 retrieval start of 7/1/04 and is contingent on full funding in FY 2003 and FY 2004.

Appendix A

Tank S-103 Conceptual Deployment of HRR Long Electrode LDM System

Appendix A
Tank S-103 Conceptual Deployment of HRR Long Electrode LDM System

This appendix contains schematic diagrams that show a conceptual installation and deployment of the high-resolution resistance (HRR) long electrode leak detection and monitoring system on S-103. The concepts for deployment were taken from the following:

- S-103 deployment configuration:
  RPP-14606, Rev.0, 2003, Reich, F. R., *Performance Test Assessment of HRR-SCRT, ERT-PET, and ERT-LET Ex-Tank Resistivity Leak Detection Methods – Fiscal Year 2002-2003*, CH2M HILL Hanford Group, Inc. Richland, Washington.

- Tank waste injection simulant:
  RPP-10904, Rev. 0, Boger, R.M., Ex-Tank LDMM Performance Evaluation Test Specification, July 2002, CH2M HILL Hanford Group, Inc. Richland, W

- Geophysical resistivity measurement system:
  PNNL-14192, Barnett, D.B., et. al., *Results of Performance Evaluation Testing of Electrical Leak-Detection Methods at the Hanford Mock Tank Site – FY 2002-2003*, January 2003, Prepared for the U.S. Department of Energy by Pacific Northwest National Laboratory, Richland, WA.

A Category 3 arrangement, the type of connection normally associated with digital telephone technology, was used as the networking technique for the 105A mock tank test. This was the simplest to implement and provided adequate interfacing with the LDM and fluidic data acquisition control and data acquisition control systems and databases. The CAT 3 network relied on digital telephone access that is readily available throughout the Hanford Site. It used the Asynchronous Digital Signal Line (ADSL) technology to provide network capability to the remote host.

Two ADSL lines were installed/used to provide sufficient network bandwidth for the two remote computers of the LDM system and the fluidic control system computer. An additional benefit of the ADSL connection was that voice telephony would be provided concurrently to the digital access without interrupting the computer connection. Two ADSL modems were delivered to the site to provide the connection points for the two-networked computers that formed the remote data acquisition and solution control for the test program.

Figure A-1 Conceptual HRR SST tank deployment showing the electrode connections to use the SST drywells as long electrodes and the tank thermocouple as the mise-a-la-masse electrode.

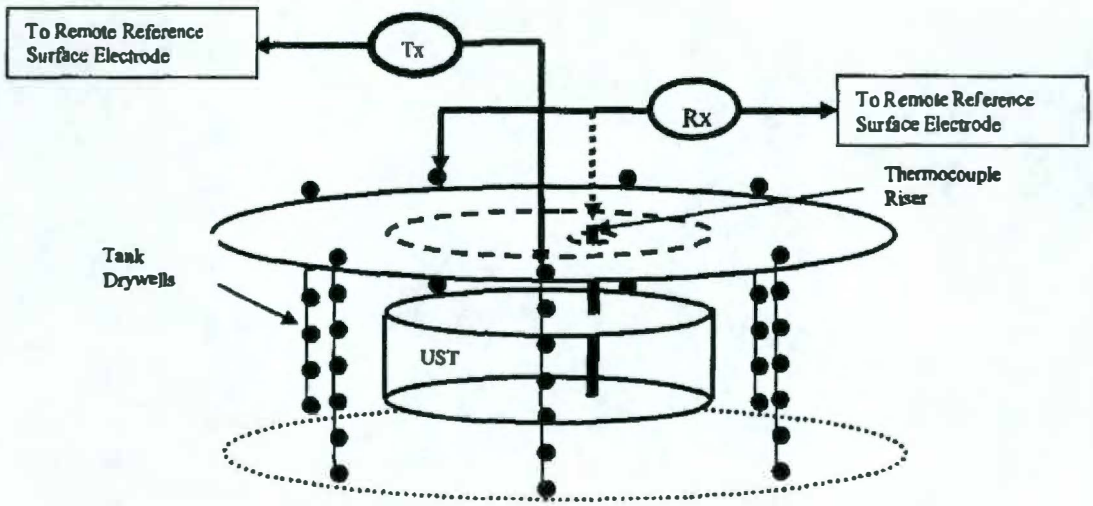

Figure A-2 Conceptual HRR long electrode LDM system installed on tank S-103, including the remote reference electrodes.

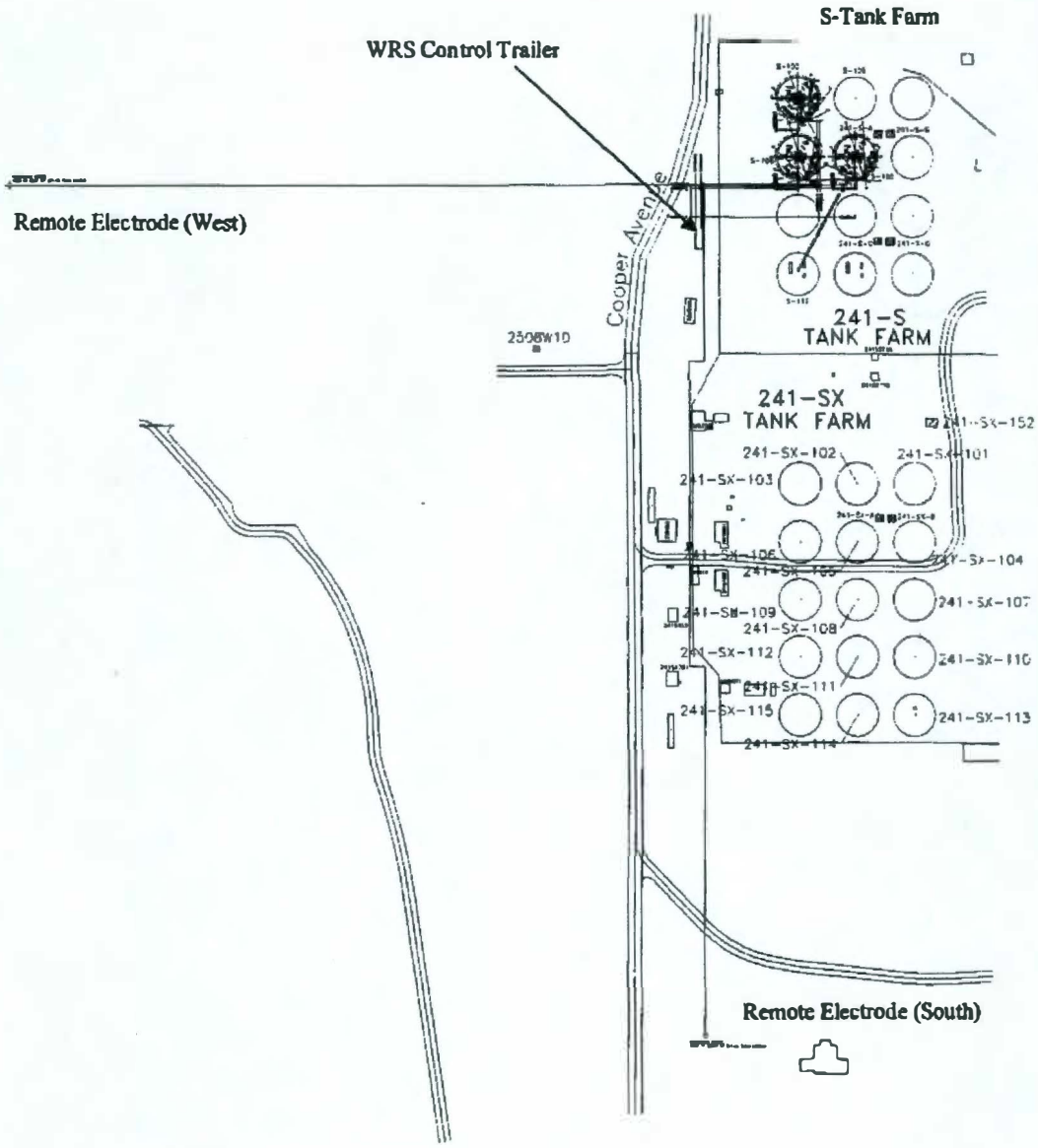

FigureA-3 Conceptual S-103 junction box and cable layout with electrical connections to the drywells and thermocouples being used as LDM electrodes.

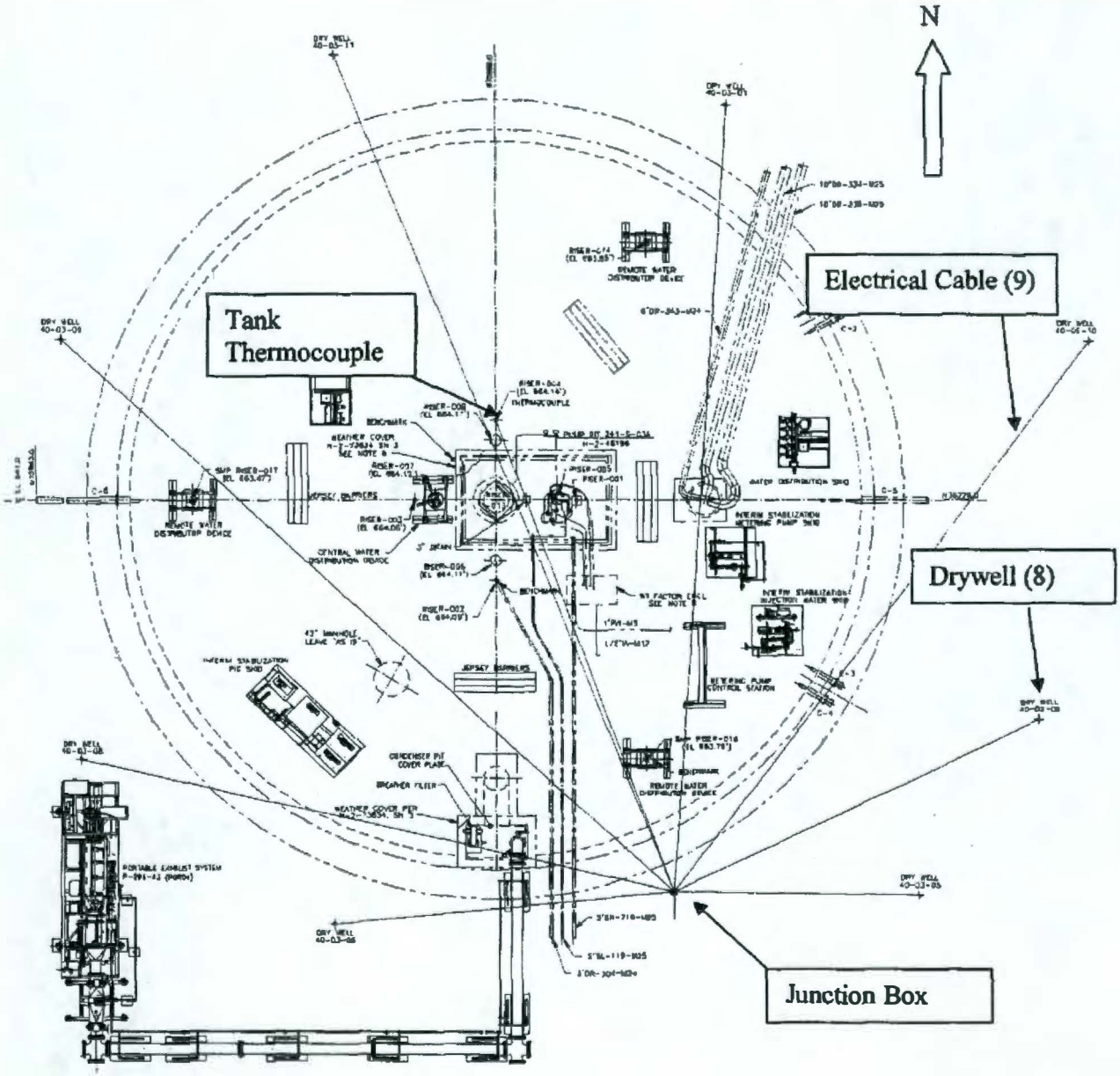

Figure A-4 Conceptual fluid injection system showing the injection and monitoring to inject known volumes of fluid into the injection well.

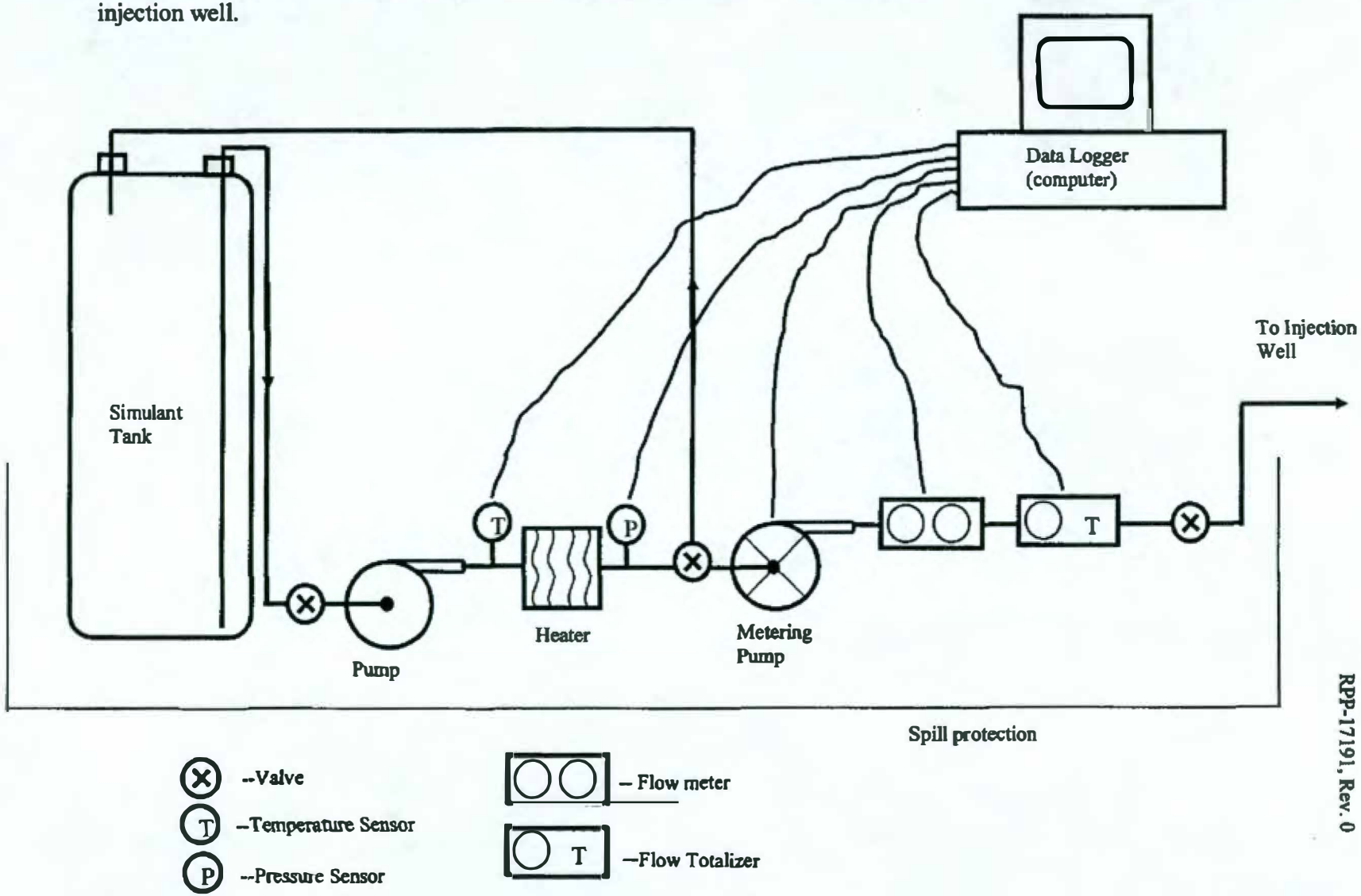

Figure A-5 Conceptual electrical connection to an S-103 tank drywell. The electrical connection to the casing end would allow gamma and neutron moisture logging in the drywell. The strain relief would protect the electrical termination on the drywell casing lip from stress.

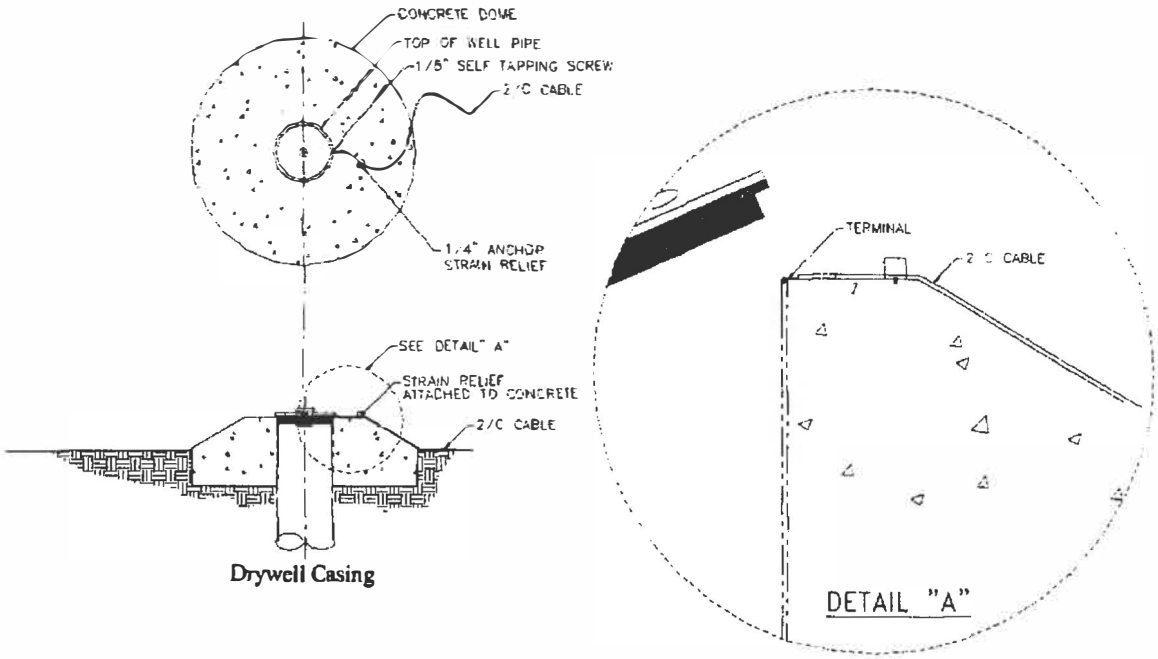

Figure A-6 Schematic of the geophysical components used at the 105A mock tank site for the FY 2002 to 2003 performance testing.

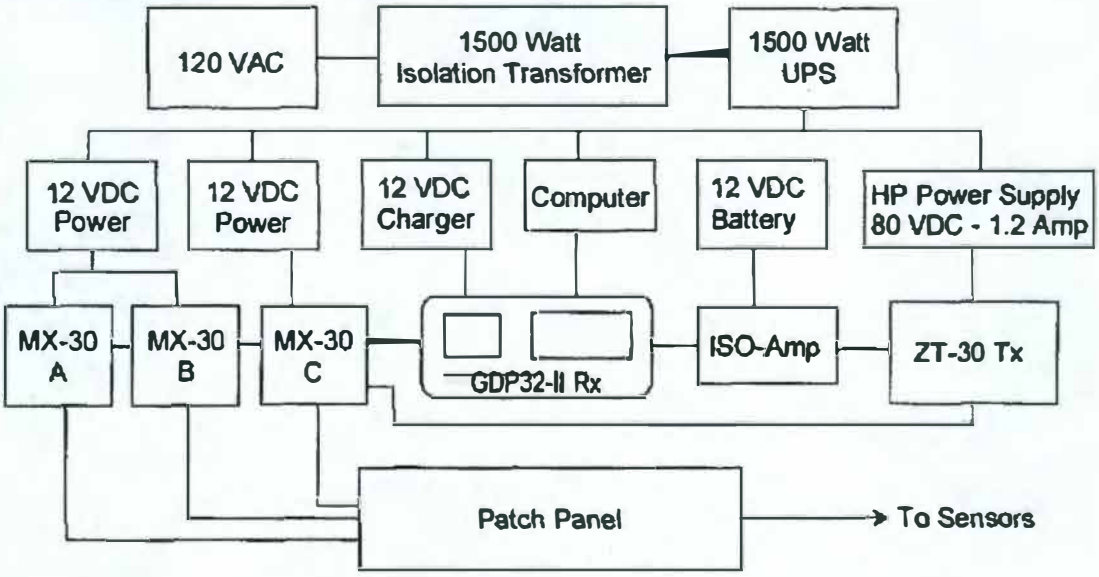

Figure A-7 Simplified schematic of 105A mock tank test system showing the main geophysical components and computer data acquisition/control system.

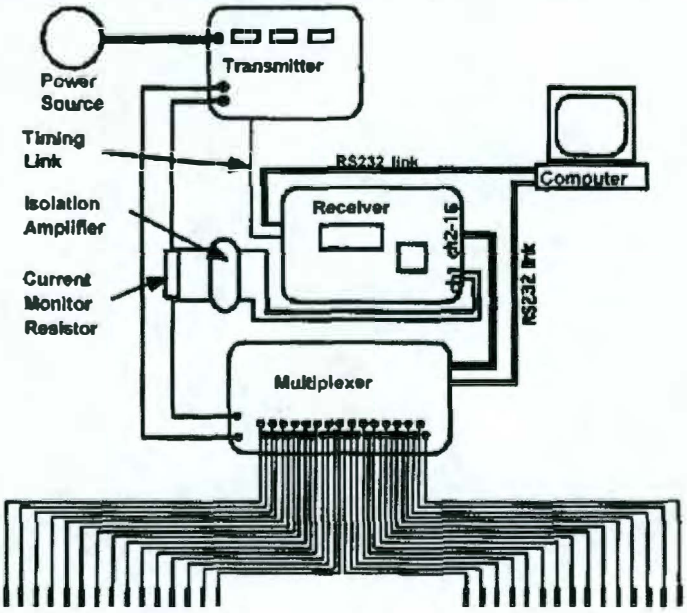

Appendix B

Tank Waste Injection Leak Simulant.

Appendix B
Tank Waste Injection Leak Simulant

B-1. FY 02-03 105A Mock Tank Waste Simulant

The following was extracted from RPP-10904, *Ex-Tank LDMM Performance Evaluation Test Specification.*

The release simulant for the FY 2002 to 2003 (FY 02-03) performance evaluation testing at the 105A mock tank test site was a 35% (wt%)sodium thiosulfate pentahydrate ($Na_2S_2O_3$ - $5H_2O$). This chemical and concentration were selected to have properties similar to those anticipated in the tank waste. The sodium thiosulfate solution is non-hazardous and non-flammable. According to an MSDS (material safety data sheet) use of safety equipment is not mandatory with this compound or water solutions. The fluid resistivity was 0.067-ohm m (15 S/m - about 5 times more conductive than sea water) and about 3000 times more conductive than the subsurface sediment.

The injection system on the 105A mock tank test used an inline water heater that was plumbed into the recirculation loop at the centrifugal pump outlet, and the solution storage tank was insulated with a blanket of 0.64-cm (0.25-in.) foam insulation. These modifications maintained the tank solution temperature at 30° to 35°C (86° to 95°F) and prevented precipitation of the sodium thiosulfate when the ambient temperature dropped.

Table B-1 presents a comparison of the properties of a 5-Molar (5M) solution of sodium nitrate and the $Na_2S_2O_3$ - $5H_2O$ solution .

Table B-1 Comparison of a 3 M sodium thiosulfate solution with waste properties.

Physical Property	(5M Sodium Nitrate)* Tank Waste Design Specification	(3M Sodium Thiosulfate Pentahydrate)* Simulated Waste
Specific gravity	1.26	1.34
Concentration	429 g/l	482 g/l
Relative viscosity	1.81	4.35
Conductivity	173 dS/m**	128dS/m

* Source: CRC, 1975.
** dS: deci-Siemans equal to one milli-mho.

B-2 S-102 and S-103 Dissolved Tank Waste Conductivity Properties

The results of testing the feasibility of using conductivity as a dissolved sodium content measurement for S-102 tank waste are reported in RPP-15940. In this testing waste core samples were blended to represent the upper 2/3 and lower 1/3 of the S-102 tank wastes.

Repetitive water dissolutions were then completed on a number of upper, lower, and blended upper/lower waste samples. The conductivity and dissolved waste (wt%) from the dissolution samples were measured for each dissolution test cycle (up to 5 cycles were completed to simulate waste sluicing). The results show the anticipated conductivity of the dissolved liquid waste component as the S-102 tank wastes are retrieved from the tank. These dissolution samples are also representative of the waste liquid that could potentially leak from the tank during the waste retrieval.

Figure B-1 shows the S-102 dissolution sample conductivities compared with the conductivity of sodium thoisulfate for a range of concentrations (S-102 data from RPP-15940, sodium thiosulfate from an informal PNNL communication). The maximum conductivity measured for all of the S-102 waste dissolution samples was 100,000 micro-Siemans/cm while the maximum conductivity for the sodium sulfate was approximately 130,000 micro-Siemans/cm.

Figure B-1 Conductivity of S-102 dissolution samples and sodium thiosulfate at different concentrations (wt%).

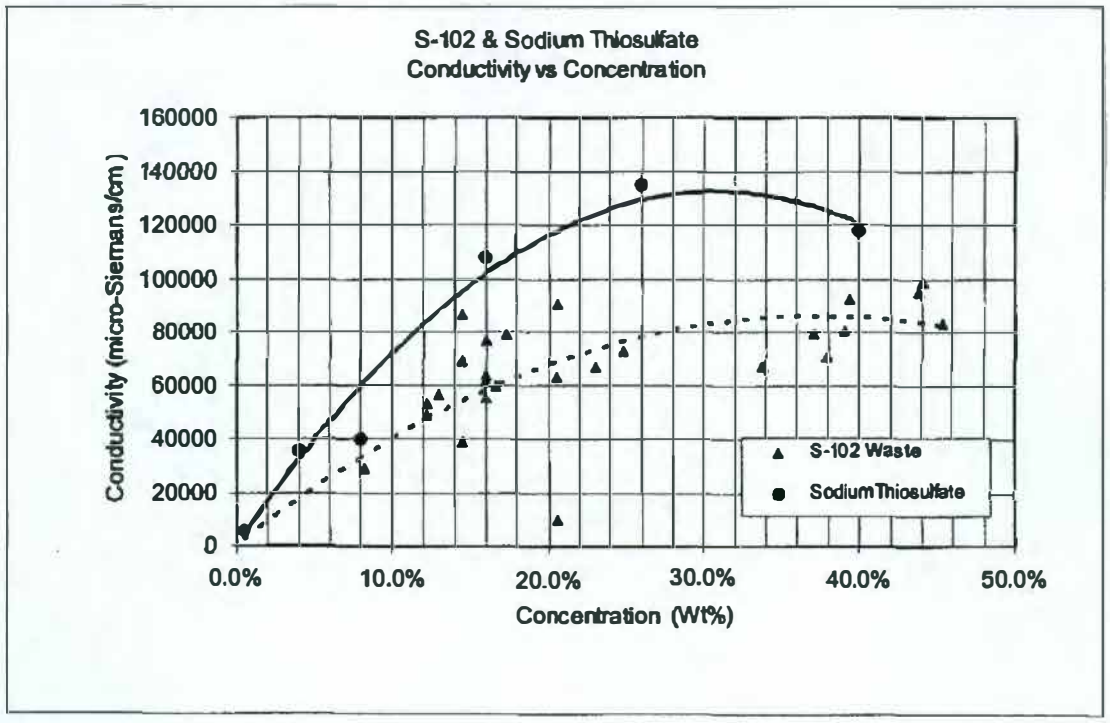

A listing of the main waste constituents of S-102 and S-103 tank wastes was found in the TWINS database. Figure B-2 shows the difference (in percent) between these constituents for S-102 and S-103. The plot shows the weight percent of S-102 minus the weight percent for S-103. In all cases the largest difference between the major conductive species is less than 3%. This would indicate that the S-102 waste conductivity data in Figure B-1 above is also representative of the conductivity anticipated for the S-103 tank waste.

Figure B-2 Major waste constituent difference between S-102 and S-103 tank wastes based on TWINS Best Basis Inventory Summary data.

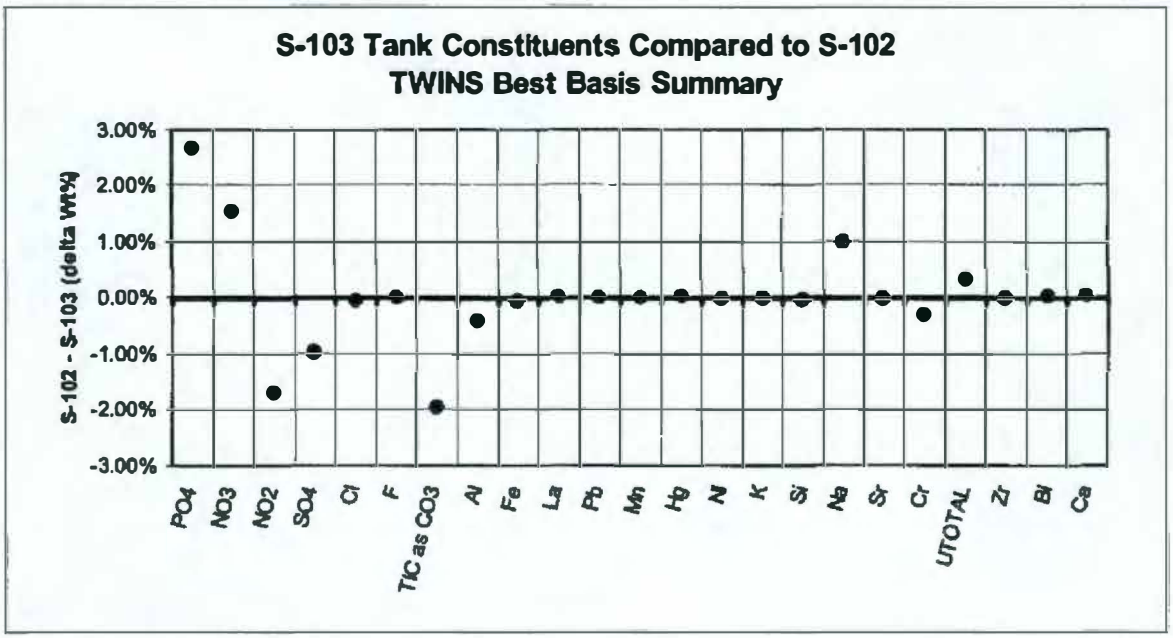

The conductivity data in Figure B-1 shows that the use of a sodium thiosulfate with a concentration greater than about 15% may over represent the conductivity of S-103 tank wastes during waste retrieval. Therefore, it may be prudent to consider using a less concentrated solution for the S-103 injection testing. The use of a dilute solution would also reduce viscosity and specific gravity of the waste simulant, which are also over represented as shown by Table B-1. This simulant should move through move through the soil similar to water based on vadose zone transports studies performed at Sisson and Lu Site using this stimulant (Gee & Ward, 2001). This represents a change from the solution that was used during the FY 02-03 105A mock tank performance testing that may impact the use of this previous data for the SST testing.

B-3 Electrical Conductivity Basics

Electrical conductance is defined as

$$\sigma \equiv \frac{L}{R \bullet A}$$

where *R* is the resistance, A is area, and L is length of the volume of material with cross-section A. Electrical conductivity has units of mhos/cm (inverse ohms) and is also expressed as Siemans/cm.

B-4 References:

RPP-10904, Rev. 0, Boger, R.M., *Ex-Tank LDMM Performance Evaluation Test Specification*, July 2002, CH2M HILL Hanford Group, Inc. Richland, Washington.

PNNL-13679, Gee, G. and A. Ward, 2001, *"Vadose Zone Transport Field Study: Status Report"*, Pacific Northwest National Laboratory, Richland, Washington.

RPP-15940, Callaway, W.S., *Tank 241-S-102 Core Sample Dissolution Testing Report*, June 2003, CH2M HILL Hanford Group, Inc. Richland, Washington.

Appendix C
Draft Table of Measurement Parameters

Appendix C
Draft Measurement Parameters.

A draft listing of potential measurement parameters to be recorded during the deployment demonstration testing and injection leak testing is shown in Tables C-1 and C-2. All data will be recorded with a common time index to allow cross-correlation between various data sources. Cost, sensor availability, and impact on test performance assessment will be some of the factors considered for the final set of measurement parameters. Hanford weather station data may be used in place of dedicated ambient air and rainfall sensors if the data is S-Farm relevant.

A system log will also be maintained that will record the system status and other information related to the system status. The log entry frequency will be related to changes in the system status with entries expected on at least a daily basis.

Table C-1 Draft Table of Measurement Parameters for the Deployment Demonstration.

Parameter	Units	Sensor Accuracy	Measurement Frequency
Date/time	Days, hours	± 1 minute	(as a part of each measurement)
Electrode resistivity	Apparent resistivity	TBD by system vendor (similar to the FY 02-03 testing)	(TBD)
Ambient air temperature	°F	± 2 °F (Hanford weather station data may be used eliminating this sensor)	Every 1-2 hours
Rain fall	Inches of water	± 0.1 inch (Hanford weather station data may be used eliminating this sensor)	Immediately (1-2 hours) after a rain event.

Table C-2 Draft Table of Measurement Parameters for the Leak Injection Test

Parameter	Units	Sensor Accuracy	Measurement Frequency
Date/time	Days, hours	± 1 minute	(as a part of each measurement)
Electrode resistivity	Apparent resistivity of electrodes	TBD by system vendor (similar to the FY 02-03 testing)	(TBD)
Ambient air temperature	°F	± 2 °F	Every 1-2 hours
Fluid flow	Gallons/hour	±5% (±2% repeatability) or better	(TBD)
Total injected volume	Gallons	±5% (±2% repeatability) or better.	(TBD)
Injection fluid temperature	°F	(with ±2% accuracy, 1% repeatability)	(TBD)

Appendix D

Injection Test Matrix (Draft)

Appendix D
Injection Test Matrix (Draft)

D.1.0 Introduction

The purpose of the testing is to obtain qualitative and quantitative data to support the performance assessment of the HRR long electrode LDM system and to obtain leak data to update a data processing model/protocol for use during future SST retrievals. Data is desired that is most representative of the conditions anticipated when a tank leak occurs during a waste retrieval campaign. It is assumed that the tank leaks during waste retrieval will be similar to the leaks that have occurred under normal long-term waste storage conditions.

The injection well and the injection leaks will be designed to be representative of the most common leaks anticipated from a waste tank. The conceptual design for the injection well currently has two leak points at two different elevations, one just below the tank bottom and one at a (TBD) lower elevation. The final design of the injection well and allowed injection volumes will depend on the permit and authorizations that are required for this injection testing.

The test matrix for the FY 02-03 105A mock tank testing was a large (110 day test interval) multiple cycle test (13 no-leak and 13 leak tests) matrix and was designed to produce data over a range of no-leak and leak (leak rate and leak volume) test conditions as well as provide repetitive leak testing (RPP-14606). In comparison, the injection leak testing that will be completed at an SST is anticipated to be constrained to a much smaller number of tests, leak locations, leak volume, leak rate, and repetitive tests. The objective is therefore to design a test matrix that provides key calibration data and data that will allow the LDM performance assessment data from FY 02-03 105A mock tank testing to be used to complete/augment the performance characterization for the HRR long electrode LDM system at the SST.

D.2.0 Injection Test Matrix Considerations

There are a number of considerations in the design of a leak test matrix that include:
1.) Leak detection requirements that are identified in the S-112 LDM strategy document (RPP-10413):

- Historical leak data that indicates 1.8 gal/hr is a conservative leak rate, with a high historical leak rate of 100 gal/hr (historical leak rates show a range in-tank leak rates from 0.03 to 102 gal/hr).
- A requirement that a retrieval integrated LDM system be designed and operated to mitigate leak volumes ranging from 8,000 gallons to 40,000 gallons for the duration of the retrieval demonstration.
- A requirement that an LDM system demonstrate an ability to indicate a leak within 24 hours of the onset of a tank leak (the leak rate was not specified), per DOE/Ecology LDM system performance requirements. The goal is a 95% confidence interval with 5% false alarm for a leak volume < 8,000 gallons.

2.) The 105A mock tank testing and the results of the S-112 resistivity measurements indicated a potential loss of sensitivity between the mock tank and an SST, which results in the following (RPP-16900):

- An estimated leak detection sensitivity threshold of 250 to 500 gallons for 2-gallon/hour (gph) to 20-gph leak rates (This is a threshold leak indication with a high potential false alarm rate and with no ability to estimate leak volume.).
- An estimated leak detection sensitivity for a 95% probability of detection and a 5% probability of false alarm (RPP-15449):
  - 6,000 to 8,000 gallons for a 1-day time period.
  - 4,000 to 6,000 gallons for a 2-day time averaged period.
  - 2,000 to 4,000 gallons for a 4-day time averaged period.

3.) Table D-1 shows the accumulated leak volumes for a range of leak rates and leak times (days). The table illustrates the trade-off between leak rate and leak time to produce a specific leak volume. For example, it will take over 6-days for a 50-gph leak to produce an 8,000-gallon leak volume.

Table D-1 Leak Rate and Leak Time data

Leak Rate	Gallons for Leak Days Totaling:					
(gal/hour)	1-day	2-days	4-days	6-days	8-days	10-days
0.5	12	24	48	72	96	120
1	24	48	96	144	192	240
1.8	43	86	173	259	346	432
5	120	240	480	720	960	1200
10	240	480	960	1440	1920	2400
20	480	960	1920	2880	3840	4800
30	720	1440	2880	4320	5760	7200
50	1200	2400	4800	7200	9600	12000
60	1440	2880	5760	8640	11520	14400

4.) One approach supporting the use of the FY 02-03 105A mock tank performance data is to minimize differences between the planned SST injection test and this prior testing. This ideally includes using the same waste simulant and leak rates and leak volumes. However, the leak parameters may have to be increased in order to complete the SST injection testing within a reasonable test time.

5.) The are a number of advantages for using 3 test repetitions verses 2 test repetitions. These include the ability to use a "two out of three" examination to identify potentially erratic data. There is also a statistical advantage in a 3 test repetition verses a 2 test repetition. The standard deviation for a 3 repetition test can be much larger than the standard deviation for a 2 repetition test and still be within a 95% confidence window.

D.3.0 Injection Leak Test Matrix

Based on the above considerations, an initial "ballpark" estimate for the injection leak rates are 10-gallon/hour and 20-gph. These are the same leak rates as used in the FY 02-03 105A mock tank performance testing. These leaks are also a trade-off for leak rates close to the historical tank leak rates and are leak rates that will allow the completion of leak testing within a reasonable time period.

Conceptually, a test matrix would have a minimum of 3 injection leaks at the two different leak rates. The use of two injection rates would establish the slope of the calibration curve and the repetitive testing would provide elementary statistical performance data. The data assessment would include the baseline measurement data from which comparative signal-to-noise data would be derived (assumes that noise is independent of signal level which is valid for most systems). The LDM data would also be recorded on a near-continuous basis from which a leak threshold levels would be assessed.

An injection test over a 3-4 month interval would allow injection rates of 10-gph and 20-gph to be used to each inject 3 cycles of over 5,000 gallons at each leak rate. This does not include the time to acquire baseline data prior to initiating the tank leak testing or post-test baseline data.

The testing should be interactive and not run as a "blind" test. This would allow early test termination if sufficient data of sufficient quality is obtained before completing a projected total injection volume or injection time.

Currently it is estimated that a permit for a 30,000-gallon total test volume would allow data to be obtained at two release elevations and provide some latitude within the leak rate and repetitive testing.. Details of the test matrix will be further developed, based on testing needs and on limits that would be established by permits and authorizations obtained for the injection well and the injection leak fluid. The test matrix should strive to minimize the injected fluid but also maximize the data for verifying and validating leak detection performance.

D.4.0 References:

RPP-10413, Rev.0, 2003, Hanson, C. E., *Tank S-112 Saltcake Waste Retrieval Demonstration Project Leak Detection, Monitoring, and Mitigation Strategy*, CH2M HILL Hanford Group, Inc. Richland, WA.

RPP-14606, Rev.0, 2003, Reich, F. R., *Performance Test Assessment of HRR-SCRT, ERT-PET, and ERT-LET Ex-Tank Resistivity Leak Detection Methods – Fiscal Year 2002-2003*, CH2M HILL Hanford Group, Inc. Richland, Washington.

RPP-16900, Rev. 0, 2003, Reich, F.R., *Assessment of Ex-Tank Gamma and Neutron Drywell Logging and Resistivity LDM Methods*, CH2M HILL Hanford Group, Inc. Richland, WA.