U.S. Department of Energy
Office of River Protection
P.O. Box 450, MSIN H6-60
Richland, Washington 99352

0097080

JUN 0 1 2011

11-ESQ-117

Ms. Jane A. Hedges, Program Manager
Nuclear Waste Program
Washington State
Department of Ecology
3100 Port of Benton Blvd.
Richland, Washington 99354

Dear Ms. Hedges:

SUBMITTAL OF HANFORD FACILITY RESOURCE CONSERVATION AND RECOVERY ACT (RCRA) PERMIT MODIFICATION NOTIFICATION FORM 24590-PTF-PCN-ENV-08-008

Reference: WA7890008967, "Dangerous Waste Portion of the Hanford Facility Resource Conservation and Recovery Act Permit for the Treatment, Storage, and Disposal of Dangerous Waste, Part III, Operating Unit 10, 'Waste Treatment and Immobilization Plant.'"

This letter transmits Hanford Facility RCRA Permit Modification Notification Form 24590-PTF-PCN-ENV-08-008, attached, for the Washington State Department of Ecology (Ecology) review and approval. The form describes a requested Class 1 modification requiring concurrence or approval to the Reference.

Modification Notification Form 24590-PTF-PCN-ENV-08-008 submits a mechanical data sheet (24590-PTF-MVD-PWD-00002) and mechanical drawings (24590-PTF-MV-PWD-00010001, 24590-PTF-MV-PWD-00010002, and 24590-PTF-MV-PWD-00010003) for the Pretreatment Facility plant wash vessel (PWD-VSL-00044) to replace the permitted design documents currently found in Appendix 8.6 of the Reference.

Ecology was provided an opportunity to review the modification notification form and the associated information and comments were dispositioned.

H.0.8

If you have any questions, please contact me, or your staff may contact Gae M. Neath, Office of Environmental Safety and Quality, (509) 376-7828.

Sincerely,

Brian A. Hawkins
for Paul G. Harrington, Acting Assistant Manager
Office of Environmental Safety and Quality

ESQ:GMN

Attachment

cc w/attach:
J. Brown, BNI
J. M. Colby, BNI
B. L. Curn, BNI
B. G. Erlandson, BNI
P. A. Fisher, BNI
S. K. Murdock, BNI
F. M. Russo, BNI
Administrative Record (WTP H-0-8)
BNI Correspondence
Environmental Portal, LMSI

RECEIVED
JUN 0 7 2011
EDMC

cc electronic:
R. K. Biyani, Ecology
A. S. Carlson, Ecology
S. L. Dahl, Ecology (1 hard copy)
M. E. Jones, Ecology
D. W. Mears, Ecology
J. J. Wallace, Ecology (2 hard copies)
T. R. Williams, Ecology
J. F. Ollero, MSA
A. C. McKarns, RL
D. J. Sommer, SCS

cc w/o attach:
D. M. Busche, BNI
J. Cox, CTUIR
S. G. Harris, CTUIR
D. McDonald, Ecology
G. P. Bohnee, NPT
K. Niles, Oregon Energy
S. R. Weil, RL
R. Jim, YN

Attachment
11-ESQ-117
(15 Pages – Double Sided)

Hanford Facility RCRA Permit Modification Notification
Form 24590-PTF-PCN-ENV-08-008

Quarter Ending June 30, 2011 24590-PTF-PCN-ENV-08-008

Hanford Facility RCRA Permit Modification Notification Form

Part III, Operating Unit 10

Waste Treatment and Immobilization Plant

Index

Page 2 of 3: Hanford Facility RCRA Permit, Part III, Operating Unit 10, Waste Treatment and Immobilization Plant
Replace Mechanical Data Sheet (MDS) and Mechanical Drawings for the PTF Plant Wash Vessel (PWD-VSL-00044) in Appendix 8.6 of the Dangerous Waste Permit (DWP).

Submitted by Co-Operator:

Donna M Busche 4/21/11

D. M. Busche Date

Reviewed by ORP Program Office:

5/27/11

D. L. Noyes Date

Quarter Ending June 30, 2011 24590-PTF-PCN-ENV-08-008

Hanford Facility RCRA Permit Modification Notification Form	
Unit: **Waste Treatment and Immobilization Plant**	Permit Part: **Part III, Operating Unit 10**

Description of Modification:

The purpose of this Class 1 prime modification is to update the MDS and Equipment Assembly mechanical drawings for the PTF Plant Wash Vessel (PWD-VSL-00044) in Appendix 8.6 of the DWP.

The following MDS and drawings are being submitted to replace the MDS and drawings currently in Appendix 8.6. The increase in the number of drawings submitted results from converting the source drawing into three to provide a clearer representation of the system, including additional details for internal assemblies.

Appendix 8.6			
Replace:	24590-PTF-MV-PWD-P0010, Rev. 1	With:	24590-PTF-MV-PWD-00010001, Rev. 0 24590-PTF-MV-PWD-00010002, Rev. 0 24590-PTF-MV-PWD-00010003, Rev. 0
Replace:	24590-PTF-MVD-PWD-P0002, Rev. 3	With:	24590-PTF-MVD-PWD-00002, Rev. 8

This modification requests Ecology approval and incorporation into the permit the specific changes to the above DWP documents. Changes to earlier revisions of source documents not captured by change bars are identified in the revision history summary. Revisions are the result of ongoing design (changes from vendor preliminary data to vendor detailed design), seismic and mixing analyses, and general criteria from design verification review. The following identifies the significant changes that have been incorporated:

Mechanical Drawings (24590-PTF-MV-PWD-00010001, 24590-PTF-MV-PWD-00010002, and 24590-PTF-MV-PWD-00010003)

- Modified, deleted, and added notes, holds, and references
- Added sheets (2 of 3 and 3 of 3) with sections and details
- Provided detail on number and sizes of nozzles
- Added/revised ITS details

Mechanical Data Sheet (24590-PTF-MVD-PWD-00002)

- Modified, deleted, and added notes; added references (Attachment 1)
- Updated quality level and operating conditions; increased erosion allowance and revised specific gravity; and updated Equipment Cyclic Data Sheet
- Added Functional/Safety Requirements section and Seismic section
- Added/updated sections describing Loads Induced by Pulse Jet Mixers (PJMs), Hydrodynamic Loads Due to Normal PJM Operations, and PJM Overblow Loads
- Added diagram and information for External Pipe Support Loads
- Added table for Nozzle Loads
- Added Equipment Qualification Datasheet (EQD), which includes E-Notes 1 through 7 (originally numbered as Notes 15 through 21 in Revision 7)

This modification requests Ecology approval and incorporation of the following outstanding change document(s) into the permit. Although not yet incorporated into the revised documents included in this PCN, the listed change document(s) are intended to be incorporated into the permit.

24590-PTF-MV-PWD-00010001

- 24590-WTP-SDDR-MS-10-00083

24590-PTF-MVD-PWD-00002

- 24590-QL-MRE-MVA0-00001-T0004

Quarter Ending June 30, 2011 24590-PTF-PCN-ENV-08-008

WAC 173-303-830 Modification Class:	Class 1	Class [1]1	Class 2	Class 3
Please mark the Modification Class:		X		

Enter relevant WAC 173-303-830, Appendix I Modification citation number: NA

Enter wording of WAC 173-303-830, Appendix I Modification citation:

In accordance with WAC 173-303-830(4)(d)(i), this modification notification is requested to be reviewed and approved as a Class [1]1 modification. WAC 173-303-830(4)(d)(ii)(A) states, "Class 1 modifications apply to minor changes that keep the permit current with routine changes to the facility or its operation. These changes do not substantially alter the permit conditions or reduce the capacity of the facility to protect human health or the environment. In the case of Class 1 modifications, the director may require prior approval."

Modification Approved/Concur: ☐ Yes ☐ Denied (state reason below) Reason for denial:	Reviewed by Ecology:
	J. J. Wallace Date

Doc: 11-ESQ-117

Drawing(s):

24590-PTF-MV-PWD-00010001 Rev 0 [SHEET 1 OF 3]
24590-PTF-MV-PWD-00010002 Rev 0 [SHEET 2 OF 3]
24590-PTF-MV-PWD-00010003 Rev 0 [SHEET 3 OF 3]

have been scanned as separate attachment(s) due to size and printing capabilities.

R11222237

MECHANICAL DATA SHEET: VESSEL

PLANT ITEM No. 24590-PTF-MV-PWD-VSL-00044

Project	RPP-WTP	P&ID	24590-PTF-M6-PWD-00002001, and 00046 24590-PTF-M6-UFP-00007007, 00008007, 00009006, and 00011005. 8
Project No	24590	Calculations:	Attachment 1 8
Project Site	Hanford	Vessel Drawing	24590-PTF-MV-PWD-00010001, 10002, and 10003
Description:	Plant Wash Vessel	Reports	Attachment 1 8

Reference Data

Charge Vessels (Tag Numbers)	PWD-VSL-00121, PWD-VSL-00122, PWD-VSL-00123, PWD-VSL-00124, PWD-VSL-00125
Pulsejet Mixers / Agitators (Tag Numbers)	PWD-PJM-00021, PWD-PJM-00022, PWD-PJM-00023, PWD-PJM-00024, PWD-PJM-00025, PWD-PJM-00026, PWD-PJM-00027, PWD-PJM-00028
RFDs/Pumps (Tag Numbers)	PWD-RFD-00121, PWD-RFD-00122, PWD-RFD-00123, PWD-RFD-00124, PWD-RFD-00125

Design Data

Quality Level		Q (Note 13)	Fabrication Specs	24590-WTP-3PS-MV00-T0001		
Seismic Category		SC-1	Design Code	ASME VIII Div 1		
Service/Contents		Radioactive Liquid	Code Stamp	Yes		
Design Specific Gravity		1.30	NB Registration	Yes		
Maximum Operating Volume	gal	88,636 8	Weights (lbs)	Empty	Operating	Test
Total Volume	gal	103,029 8	Estimated	227,000	1,178,000	1,088,000
Environmental Qualification		See EQD Section				

Inside Diameter	inch	276			Wind Design	Not Required	
Length/Height (TL-TL)	inch	306			Snow Design	Not Required	
		Vessel Operating	Vessel Design	Coil/Jacket Design	Seismic Design	24590-WTP-3PS-MV00-T0002	
Internal Pressure	psig	0.00	15	N/A			
External Pressure	psig	1.5	8 8	N/A	Postweld Heat Treat	Not Required	
Temperature	°F	163	230 8	N/A	Corrosion Allowance	Inch	0.04 (Notes 9 & 10)
Min. Design Metal Temp.	°F	40					

Materials of Construction

Component	Material	Minimum Thickness / Size	Containment
Top Head	SA 240 316 (Note 1)	See Drawing	Auxiliary (Note 6)
Shell	SA 240 316 (Note 1)	See Drawing	Primary (Note 6)
Bottom Head	SA 240 316 (Note 1)	See Drawing	Primary (Note 6)
Support	SA 240 304 (Note 1)	See Drawing	N/A
Jacket/Coils/Half-Pipe Jacket	N/A	N/A	N/A
Internals	SA 240 316 (Note 1)	See Drawing	Thermowells Primary
Pipe	SA 312 TP316 Seamless (Note 1)	See Drawing	Primary (Note 6)
Forgings/ Bar stock	SA 182 F316 (Note 1)	See Drawing	N/A
Gaskets	N/A	N/A	N/A
Bolting	N/A	N/A	N/A

Miscellaneous Data

Orientation	Vertical	Support Type	Skirt
Insulation Function	Not Applicable	Insulation Material	Not Applicable
Insulation Thickness (inch)	Not Applicable	Internal Finish	Note 3
		External Finish	Note 3

Remarks

Note 1: Max. carbon of 0.030 %

Note 2: Deleted

Note 3: Welds descaled as laid.

Note 4: Vessel volumes are approximate and do not account for the manufacturing tolerances, nozzles, and displacement of internals.

Note 5: This vessel is in a Black cell.

Note 6: All welds forming part of the primary and auxiliary containment including nozzle attachment welds shall be subjected to 100% volumetric examination.

Note 7: Contents of this document are Dangerous Waste Permit affecting.

Note 8: Deleted

Note 9: Ensure that an additional 0.116" is available for erosion in the bottom head and shall report the minimum thickness required for all specified loading conditions, exclusive of erosion and corrosion allowances.

Note 10: Ensure that an additional 0.064" is available for erosion in the lower 4" of the interior conical surface of the pulse jet mixers.

Note 11: Deleted 8

Note 12: Deleted 8

Note 13: Vessel to be designed, fabricated, and tested to Q, L-1 requirements defined in 24590-WTP-3PS-MV00-T0001.

Note 14: Change to quality level, operating external pressure, revised specific gravity, revised operating temperature, revised external pressure, revised corrosion allowance, revised Notes 9 & 10, added Notes 13, 14, 15, 16, 17, 18, 19, 20, and 21, added functional/safety requirements, added seismic section, change to parent vessel cyclic data, change to hydrodynamic loads for normal operations, revised single overblow loads, added MOB loads, change to PJM cyclic data, added HPAV load conditions and loads, added E&NS table and signature, added Equipment Qualification Data Sheet, added DOE Radioactive Material Disclaimer. If any Sections contain a revision triangle next to the Section heading means the entire section has been revised or is new - the entire section must be reviewed for changes/additions.

Note 15: Renumbered Equipment Qualification Notes for clarity. Revised Hydrodynamic Loading, PJM Overblow Loads, and Nozzle Loads Sections. Added External Pipe Support Loads. 8

Functional/Safety Requirements 8

PWD-VSL-00044 (parent vessel) is considered a high active process vessel credited to prevent spills of large quantities of high activity process liquid and provide primary confinement for radioactive releases. Pulse Jet Mixers (PJMs) provide a mixing function in the vessel. Vessel level instrumentation, which includes the bubbler tubes, provides level monitoring to prevent overflows and ensure proper headspace volumes are maintained. In order to meet the above functions, the vessel and internals shall be designed and fabricated in accordance with ASME Section VIII and must meet all Division 1 code allowables for all defined load conditions/combinations.

Seismic 8

- Seismic Response Spectra curves: Figures 67, 68, and 69 from calculation 24590-PTF-S0C-S15T-00057 (CCN 188859).
- Seismic analysis to be combined with operating conditions, overblow, and any sloshing loads imposed.
- Sloshing loads on vessel internals are per ASCE 4-98.
- Analysis to consider worst case seismic loads on the vessel proper and on the vessel internals.

Design Considerations for Loads Induced by Pulse Jet Mixers (PJMs) 8

Pulse Jet Mixers (PJMs) are designed to mix the vessel contents using a liquid jet discharge. PJMs are driven by compressed air. The mixing is required to enhance heat transfer, to break up hydrogen-containing particles, and to homogenize the solution. Normally, the PJMs are operated simultaneously within the parent vessel.

The PJMs operate in the following three cycles: Suction, Drive and Vent. During the suction cycle a vacuum is created in the PJM headspace and the level within the PJM rises to fill the PJM. During the drive cycle the PJM is pressurized and liquid is discharged. During the vent cycle, the pressure in the headspace approaches atmospheric and the level within the PJM is allowed to reach equilibrium.

Vessel components shall be designed to withstand loading induced by PJM operations as described herein.

Normal Operations: Liquid flows around internal structures within the parent vessel producing hydrodynamic loads such as drag and vortex shedding.

To mitigate the dynamic effects, the following pipe sizes dipped internal to the vessel are required to have a minimum first natural frequency that is double the vortex shedding frequency:

Nominal Pipe Size	Minimum First Natural Frequency
1 inch (<12" from bottom head)	14 Hz*
1 inch (>12" from bottom head)	12 Hz*
2 inch	8.0 Hz*
3 inch	5.0 Hz**

* See 24590-WTP-MVC-50-00001
** By extrapolation from 1 inch and 2 inch

Overblow Condition: Occasionally the drive cycle lasts too long and compressed air is discharged from the PJM. Overblows can also occur during system calibration. One or multiple PJMs may overblow at any time. These conditions induce acoustic and bubble rise loads on structures.

All internal components shall be designed for the combination of normal operational hydrodynamic loads and overblow loads. Single overblows (SOB) are assumed to act concurrently with the seismic event, however multiple overblows (MOB) are not assumed to act concurrently with the seismic event. Figure 1 (below) provides the acoustic load intensity that encompasses both SOB and MOB.

8

Hydrodynamic Loads Due to Normal PJM Operations

Normal operation imposes a cyclical load ranging between -0.15 and 0.25 psi in the radial direction and -0.15 to 0.15 psi in the vertical direction. The hydrodynamic pressure applies across the projected area of the component. Positive hydrodynamic forces act in the radial, outward direction and the vertical, upward direction. Seller shall apply the radial load simultaneously in the radial direction and normal to the radial direction in the horizontal plane.

PJM Overblow Loads 8

Discussion: *During normal operation, pulse jet mixers (PJMs) mix the fluid by pulling in (suction) and pushing out (drive) fluid. During an upset condition, designated as an 'overblow', air is discharged following the drive cycle of one or more PJMs. The load consists of acoustic pressure (2Hz to 200Hz) developed in the first 200ms of the event and a load due to the bubble rising through the fluid.*

The acoustic load and the bubble load are design loads as defined by ASME B&PVC, Section 8, Division 1, UG-22, applied statically. The acoustic load is not added to the bubble rise load because they occur at different times during the overblow event.

Acoustic Load

- ***The acoustic design load in Figure 1 is applied to the visible (as viewed from the overblow origin) surface of cylindrical targets such as pipes, charge vessels, and PJMs. The load is applied in the direction normal to the principal axis of the target as illustrated in Figure 2. Note: The intended net effective load on the target is equal to the projected (i.e. cross-sectional) area of the object times the acoustic design load (psi) indicated in Figure 1.***
- ***Each target is considered independent of the surrounding targets: e.g. the surrounding targets do not impede the acoustic wave by casting a shadow, as illustrated in Figure 2.***
- ***The load is not applied to small supports such as gussets, brackets, tabs, clamps, and bolts because they are rigid and the pressure drop across the target is negligible.***
- ***When the vessel contains multiple PJMs, the load from one PJM is independent of the load from other PJMs. The loads are not additive for multiple overblows.***
- ***No internal components shall be placed within 5 PJM nozzle diameters (5 * 4 in = 20 in) of a spherical zone centered at any overblowing PJM nozzle.***

Figure 1: Acoustic Design Load

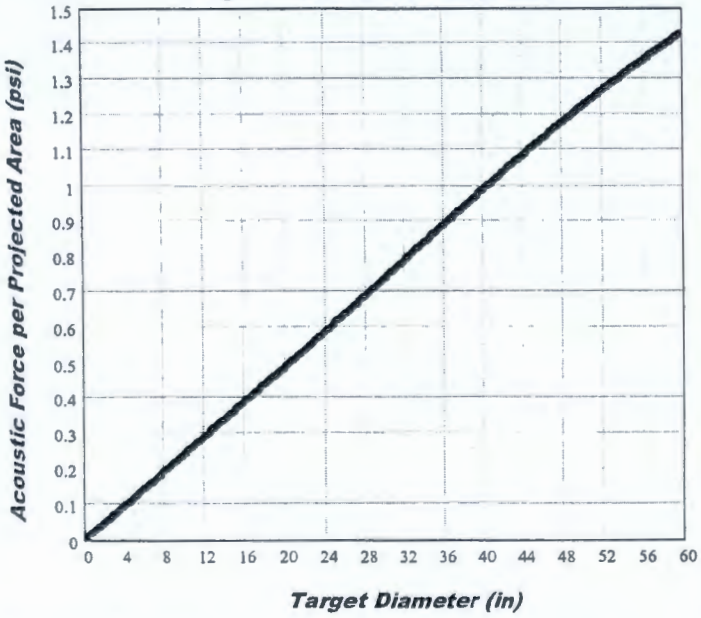

Figure 2: Load Application

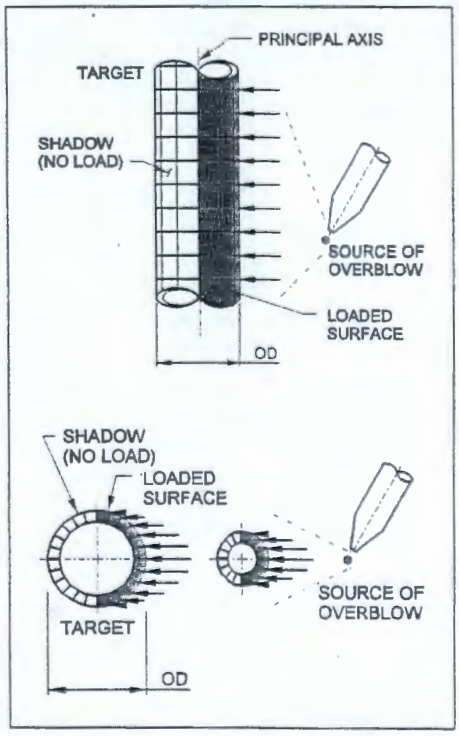

The following data is required to determine the load:

- ***Target Diameter***
- ***Target Principal Axis***

Overblow Source Coordinates

Number of Acoustic Cycles	***1000 events X 40 cycles/event for a total of 40,000 acoustic cycles.***
Bubble Rise Load	***A vertical force per projected area of 1.7 psi is applied to the surfaces in the 36-inch diameter cylindrical zone centered at the overblowing PJM(s). The bubble can be at any elevation above the overblowing PJM and only affects one zone (36-inch diameter region) at a time. When there are multiple PJMs in a vessel (MOB), each PJM has it's own bubble. To simplify analysis the bubble can be applied in a continuous cylindrical zone above each PJM top head.***
Number Bubble Rise Cycles	***1000 events X 1 cycle/event***

Equipment Cyclic Data Sheet

Component	*24590-PTF-MV-PWD-VSL-00044*
Component Description	*Parent Vessel*

The information below is provisional and envelopes operational duty for fatigue assessment. It is not to be used as operational data.

Materials of Construction	*SA 240 316 with max. Carbon of 0.030 %*
Design Life	*40 years*
Component Function and Life Cycle Description	*This is a "batch" vessel and cycle from nearly empty to nearly full. This vessel will be in the fill mode for one day, then in the discharge mode over the next day.*

Load Type		Min	Max	Number of Cycles	Comment
Design Pressure	psig	-8 (8)	15	10	Nominal assumption
Operating Pressure	psig	-1.5 0 (8)	0 2.8	7.0E6 40	Normal Operations Loss of Power
Operating Temperature	°F	59	163 (8)	2920	Uniform material temperature range, not between two points
Contents Specific Gravity		1.00	1.30	2920	
Contents Level	inch	53	371	2920	
Localized Features					
Nozzles **N55, N56**	°F	59	212	2880	

Notes

Cycle increase: The Seller must increase the numbers of operational cycles given above by 10% to account for commissioning duty unless otherwise noted.

Equipment Cyclic Data Sheet

Component	*PWD-VSL-00121, PWD-VSL-00122, PWD-VSL-00123, PWD-VSL-00124, PWD-VSL-00125*
Component Description	*Charge Vessels*

The information below is provisional and envelopes operational duty for fatigue assessment. It is not to be used as operational data.

Materials of Construction	*SA 240 316 with max. Carbon of 0.030 %*
Design Life	*40 years*
Component Function and Life Cycle Description	*These charge vessels are cyclically loaded using vacuum to fully fill the charge vessel with process liquid and compressed air to fully empty the charge vessel. The charge vessels are contained within a parent vessel with varying liquid level. They shall be designed to cycle between the maximum design pressure and the minimum design pressure plus the external static head imposed by the parent vessel. The charge vessel supports shall be designed to cycle between fully buoyant (charge vessel empty and parent vessel full) and fully loaded (charge vessel full and parent vessel empty).*

Load Type		Min	Max	Number of Cycles	Comment
Design Pressure	psig	FV	135	100	Nominal assumption
Operating Pressure	psig	FV	75	2.1E5	Number of cycles varies per charge vessel 2.1E5 is the maximum. 75 psig is max of any charge vessel
Operating Temperature	°F	59	163 (8)	2920	Same as Parent Vessel
Contents Specific Gravity		1.00	1.30	2920	Same as Parent Vessel
Contents Level	inch	Empty	Flooded	2.1E5	Coincident with pressure cycles
Localized Features					
Supports		buoyant to loaded		2.1E5	

Notes

Cycle increase: The Seller must increase the numbers of operational cycles given above by 10% to account for commissioning duty unless otherwise noted.

Equipment Cyclic Data Sheet

Plant Item Number	*PWD-PJM-00021, PWD-PJM-00022, PWD-PJM-00023, PWD-PJM-00024, PWD-PJM-00025, PWD-PJM-00026, PWD-PJM-00027, PWD-PJM-00028*
Component Description	*Pulse Jet Mixers*

The information below is provisional and envelopes operational duty for fatigue assessment. It is not to be used as operational data.

Materials of Construction	*SA 240 316 with max. Carbon of 0.030 %*
Design Life	*40 years*
Component Function and Life Cycle Description	*These pulse jet mixers (PJMs) are cyclically loaded using vacuum to fully fill the PJM with process liquid and compressed air to fully empty the PJM. The PJMs are contained within a parent vessel with varying liquid level. They shall be designed to cycle between the maximum design pressure and the minimum design pressure plus the external static head imposed by the parent vessel. The PJM supports shall be designed to cycle between fully buoyant (PJM empty and parent vessel full) and fully loaded (PJM full and parent vessel empty) states. Thrust load shall be applied only to the fully buoyant state. Assume the parent vessel is full for 50% of the number of PJM cycles.*

Load Type		Min	Max	Number of Cycles	Comment
Design Pressure	psig	*FV*	*135*	*100*	*Nominal assumption*
Operating Pressure	psig	*FV*	*16*	*8.0E6*	
Operating Temperature	°F	*59*	*163* 8	*2920*	*Same as Parent Vessel*
Contents Specific Gravity		*1.00*	*1.30*	*2920*	*Same as Parent Vessel*
Contents Level	inch	*Empty*	*Flooded*	*8.0E6*	*Coincident with pressure cycles*
Thrust	lbf	*-400*	*400*	*8.0E6*	*Conservative value*
Localized Features					
Supports		*buoyant to loaded*		*8.0E6*	

Notes

- *Cycle increase: The Seller must increase the numbers of operational cycles given above by 10% to account for commissioning duty unless otherwise noted.*

External Pipe Support Loads 8

The PWD-VSL-00044 has six standoffs on its Northern face which will be used to support four vertical pipe runs. Brackets attached to the outer face of these six stand-offs will produce transverse and moment loading on the standoffs as described in the table below:

Pipe Supports Diagram: The loads listed below have been sourced from submittal 24590-QL-POD-MVA0-00001-04-03, Rev 00B, and are considered maximum allowable attachment loads.

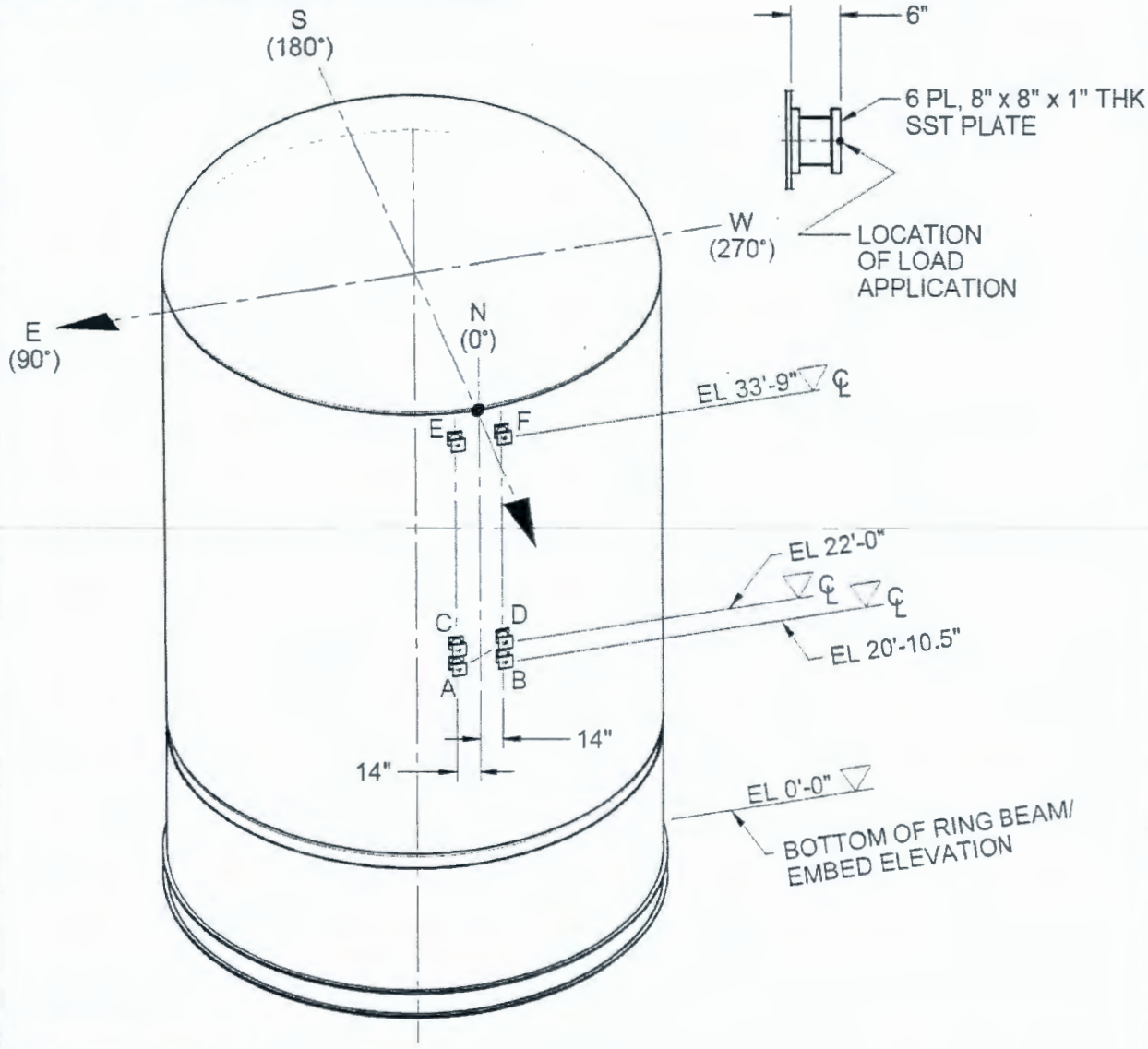

Pipe Supports Loads Table:

Location (standoff)	Fx (lbf) (North)	Fy (lbf) (vertical)	Fz (lbf) (East)	Mx (in-lbf)	My (in-lbf)	Mz (in-lbf)
A	3600	3600	150	1500	2000	300
B	3600	3600	150	1500	2000	300
C	8800	400	3100	2700	38000	4400
D	8800	400	3100	2700	38000	4400
E	5200	640	3300	20	43000	16000
F	5200	640	3300	20	43000	16000

Nozzle Loads (8)

Nozzle	Design Pressure (psig) (Note E)	Design Temp (°F) (Note E)	Size	Load Type	Loads - lbs			Moments - ft-lbs		
					Fx	Fy	Fz	Mx	My	Mz
N01	15	237	8"	Weight	234	830	234	1721	464	2248
				Seismic	734	1156	734	3503	4418	4418
				Thermal	710	640	950	2870	5720	5720
N03 (Spare)	N/A	N/A	3"	Weight	52	84	52	119	75	75
				Seismic	162	108	162	468	701	701
				Thermal	140	130	190	400	800	800
N05 (Spare)	N/A	N/A	3"	Weight	52	84	52	119	75	75
				Seismic	162	108	162	468	701	701
				Thermal	140	130	190	400	800	800
N06	75	128	4"	Weight	87	140	87	216	135	135
				Seismic	274	183	274	878	1320	1320
				Thermal	240	378	320	760	1510	1605
N07	75	128	4"	Weight	87	140	87	216	135	135
				Seismic	274	183	274	878	1320	1320
				Thermal	240	378	320	760	1510	1605
N08	150	120	3"	Weight	52	107	52	119	75	75
				Seismic	162	108	162	468	701	701
				Thermal	140	130	190	400	800	800
N10	75	192	4"	Weight	87	140	87	216	135	135
				Seismic	274	183	274	878	1320	1320
				Thermal	240	378	320	760	1510	1605
N11	80	372	2"	Weight	50	60	50	75	75	88
				Seismic	106	70	106	158	237	237
				Thermal	120	60	100	110	210	210
N12	15	188	2"	Weight	50	60	50	75	75	75
				Seismic	106	70	106	158	244	262
				Thermal	70	149	100	400	210	210
N13	150	120	3"	Weight	52	264	52	119	75	75
				Seismic	162	144	162	468	701	701
				Thermal	140	130	190	400	800	800
N14	124	140	2"	Weight	50	60	50	75	75	75
				Seismic	106	70	106	214	237	237
				Thermal	70	60	100	110	210	210
N15	124	140	2"	Weight	50	60	50	75	75	75
				Seismic	106	70	112	346	237	237
				Thermal	70	60	100	110	210	210
N16	124	140	2"	Weight	50	60	50	75	75	75
				Seismic	106	70	106	158	237	237
				Thermal	70	60	100	110	210	210
N17	124	140	2"	Weight	50	60	50	75	75	75
				Seismic	106	70	116	414	237	237
				Thermal	70	60	100	110	210	210
N18	124	140	2"	Weight	50	60	50	75	75	75
				Seismic	106	70	106	158	237	340
				Thermal	70	60	100	110	210	210

Nozzle	Design Pressure (psig) (Note E)	Design Temp (°F) (Note E)	Size	Load Type	Loads - lbs			Moments - ft-lbs		
					Fx	Fy	Fz	Mx	My	Mz
N19	124	140	2"	Weight	50	60	50	75	75	75
				Seismic	106	70	106	221	237	237
				Thermal	70	80	100	148	210	210
N20	124	140	2"	Weight	50	60	50	75	75	75
				Seismic	106	70	106	264	237	237
				Thermal	70	99	100	110	210	210
N21	124	140	2"	Weight	50	60	50	75	75	75
				Seismic	106	70	106	190	237	237
				Thermal	70	60	100	110	210	210
N22 (Spare)	N/A	N/A	2" OD	Weight	50	60	50	75	75	75
				Seismic	106	70	106	158	237	237
				Thermal	70	60	100	110	210	210
N23	124	140	3"	Weight	52	177	52	119	75	75
				Seismic	162	210	185	468	701	701
				Thermal	140	147	190	400	800	800
N24	124	140	3"	Weight	52	209	52	188	75	75
				Seismic	162	395	182	1074	701	701
				Thermal	140	130	190	400	800	800
N25	124	140	3"	Weight	52	112	52	119	75	149
				Seismic	162	134	162	516	842	701
				Thermal	140	191	190	483	800	800
N26	124	140	3"	Weight	52	182	52	119	75	75
				Seismic	162	182	204	1032	701	701
				Thermal	140	130	190	400	800	800
N27	124	140	2" OD	Weight	52	84	52	119	75	75
				Seismic	162	108	162	468	701	701
				Thermal	140	130	190	400	800	800
N28	75	133	4"	Weight	87	194	87	287	135	359
				Seismic	298	198	274	878	1320	1320
				Thermal	240	210	320	760	2406	1510
N29	75	133	4"	Weight	87	140	87	216	135	135
				Seismic	274	183	274	878	1320	1320
				Thermal	240	210	320	886	2999	1510
N30	75	133	4"	Weight	87	207	87	216	135	413
				Seismic	274	183	274	878	1320	1320
				Thermal	618	210	580	1592	2620	1510
N31	75	133	4"	Weight	87	204	87	216	135	282
				Seismic	338	225	274	878	1320	1425
				Thermal	240	210	321	820	1751	1510
N32	60	133	2" OD	Weight	60	72	60	90	90	90
				Seismic	128	84	128	190	285	285
				Thermal	137	120	183	203	405	405
N33 (Spare)	N/A	N/A	2" OD	Weight	50	60	50	75	75	75
				Seismic	106	70	106	158	237	237
				Thermal	70	60	100	110	210	210

Nozzle	Design Pressure (psig) (Note E)	Design Temp (°F) (Note E)	Size	Load Type	Loads - lbs			Moments - ft-lbs		
					Fx	Fy	Fz	Mx	My	Mz
N34 (Spare)	N/A	N/A	2"	Weight	50	60	50	75	75	75
				Seismic	106	70	106	158	237	237
				Thermal	70	60	100	110	210	210
N35	75	192	4"	Weight	87	140	87	216	135	135
				Seismic	274	183	274	878	1320	1320
				Thermal	240	378	320	760	1510	1605
N36	125	150	2"	Weight	50	60	50	75	75	75
				Seismic	106	70	106	158	237	237
				Thermal	70	74	100	110	210	210
N37	125	150	2"	Weight	50	180	50	75	75	75
				Seismic	106	98	106	158	237	237
				Thermal	70	69	100	110	210	210
N38	125	150	2"	Weight	50	60	50	75	75	75
				Seismic	106	70	106	158	237	237
				Thermal	70	93	100	138	210	210
N39	125	150	2"	Weight	50	74	50	75	75	75
				Seismic	106	70	106	158	237	329
				Thermal	70	123	100	110	210	210
N40 8 (Note F)	60	138	2"	Weight	50	60	50	75	75	75
				Seismic	106	70	106	158	237	237
				Thermal	70	60	100	110	210	210
N41 8 (Note F)	119	155	3"	Weight	52	84	52	119	75	75
				Seismic	162	108	162	468	701	701
				Thermal	140	146	190	400	800	800
N42	169	138	3"	Weight	89	272	52	119	75	368
				Seismic	162	228	162	468	701	701
				Thermal	140	130	190	400	800	800
N43	N/A	N/A	6" Parent	Weight	N43 is parent nozzle, nozzle loads are applied via N43A, 43B, N43C					
				Seismic						
				Thermal						
N43A (Note C)	15	130	1"	Weight	15	20	15	20	20	20
				Seismic	30	20	30	37	55	55
				Thermal	20	47	30	42	50	50
N43B (Note C)	15	130	1"	Weight	15	20	15	20	20	20
				Seismic	30	20	30	37	55	55
				Thermal	20	47	30	48	50	50
N43C (Note C)	15	130	1"	Weight	15	20	15	20	20	20
				Seismic	30	20	30	37	55	55
				Thermal	20	47	30	50	50	50
N44	N/A	N/A	6" Parent	Weight	N44 is parent nozzle, nozzle loads are applied via N44A, 44B, N44C					
				Seismic						
				Thermal						
N44A (Note C)	15	130	1"	Weight	15	20	15	20	20	20
				Seismic	30	20	30	37	55	55
				Thermal	20	47	30	50	50	50

Nozzle	Design Pressure (psig) (Note E)	Design Temp (°F) (Note E)	Size	Load Type	Loads - lbs			Moments - ft-lbs		
					Fx	Fy	Fz	Mx	My	Mz
N44B (Note C)	15	130	1"	Weight	15	20	15	20	20	20
				Seismic	30	20	30	37	55	55
				Thermal	20	47	30	50	50	50
N44C (Note C)	15	130	1"	Weight	15	20	15	20	20	20
				Seismic	30	20	30	37	55	55
				Thermal	20	47	30	50	50	50
N45	50	237	4"	Weight	100	150	100	250	250	250
				Seismic	274	183	274	878	1320	1320
				Thermal	240	210	320	760	1510	1510
N46	37	205	3"	Weight	52	378	52	119	75	75
				Seismic	162	220	214	594	701	701
				Thermal	140	130	190	400	800	800
N47	60	188	2"	Weight	60	72	60	90	90	90
				Seismic	128	84	128	190	285	285
				Thermal	137	120	183	203	405	405
N48 (Spare)	N/A	N/A	2"	Weight	50	60	50	75	75	75
				Seismic	106	70	106	158	237	237
				Thermal	70	60	100	110	210	210
N49 (Spare)	N/A	N/A	6"	Weight	210	335	210	598	374	374
				Seismic	663	443	663	2423	3638	3638
				Thermal	590	530	790	2140	4280	4280
N50	15	188	8"	Weight	234	373	234	741	464	464
				Seismic	734	490	734	3206	4418	4418
				Thermal	710	640	950	2870	5720	5720
N52	124	138	2"	Weight	50	60	50	75	75	75
				Seismic	106	70	106	158	237	237
				Thermal	70	60	100	110	210	210
N53	15	188	2" OD	Weight	50	60	50	75	75	75
				Seismic	106	70	106	158	237	237
				Thermal	70	60	100	110	210	210
N54	N/A	N/A	24" OD	Weight	Manway (No Loads Applied)					
				Seismic						
				Thermal						
N55	125	237	6"	Weight	210	377	210	598	374	394
				Seismic	932	449	663	2423	3638	3638
				Thermal	1468	530	790	2140	4280	4280
N56	125	237	6"	Weight	210	335	210	598	374	374
				Seismic	1316	443	663	2423	3638	3638
				Thermal	1080	720	790	2140	4280	4280
N57	150	160	3"	Weight	52	117	52	130	75	75
				Seismic	162	108	162	468	701	701
				Thermal	140	130	190	418	800	800
N58 (Spare)	N/A	N/A	4"	Weight	87	212	87	216	135	393
				Seismic	274	208	274	878	1320	1320
				Thermal	491	210	320	760	1510	1510

Nozzle	Design Pressure (psig) (Note E)	Design Temp (°F) (Note E)	Size	Load Type	Loads - lbs			Moments - ft-lbs		
					Fx	Fy	Fz	Mx	My	Mz
N61	15	130	2" OD	Weight	50	60	50	75	75	75
				Seismic	106	70	106	158	237	237
				Thermal	70	60	100	110	210	210

Notes for Nozzle Loads

A. Direction of load application for shell nozzles is per diagrams in 24590-WTP-3PS-MV00-T0001 Appendix A.

B. For nozzles in head: x = North/South, y = Vertical, and z = East/West - Vessel 0° defined as North.

C. Values provided at plate on top of parent nozzle. 8

D. Nozzle loads shown are to be used in place of those specified in 24590-WTP-3PS-MV00-T0001 – do not apply any thermal reduction factors.

E. Nozzle Pressures and Temperatures to be used to qualify the nozzles only 8

F. HPAV nozzle loads are 'on hold' due to potential HPAV concerns. Loading to be confirmed by subsequent HPAV analysis. 8

EQUIPMENT QUALIFICATION DATASHEET (EQD)

Equipment Identification

Component Tag Number	24590-PTF-MV-PWD-VSL-00044	Safety Classification	☒ SC ☐ SS ☐ APC ☐ SDC ☐ SDS ☐ RRC All Subcomponents are considered SC
Manufacturer / Supplier	Northwest Copper Works		
Requisition Number	24590-QL-MRE-MVA0-00001		
Model	Custom	Seismic Category	☒ SC-I ☐ SC-II ☐ SC-III ☐ SC-IV All subcomponents are designed to SC-I
Description (Include descriptive text [e.g., location, elevation])	Plant Wash Vessel, Pre-Treatment Column Line K/15, elevation 0'-0"		
Safety Function(s)	PWD-VSL-00044 (parent vessel) is considered a high active process vessel credited to prevent spills of large quantities of high activity process liquid and provide primary confinement for radioactive releases. Pulse Jet Mixers (PJMs) provide a mixing function in the vessel to prevent hydrogen accumulation. Vessel level instrumentation, which includes the bubbler tubes, provides level monitoring to prevent overflows and ensure proper headspace volumes are maintained for hydrogen dilution.		

Seismic Safety Function	☒ Yes ☐ No	Room Number(s): P-0104, Pre-Treatment Facility
Maintenance Accessible	☐ Yes ☒ No	Method of Maintenance Access: ☐ Remote ☐ Hands On ☒ None
Seismic Operability Requirements:	☒ During Seismic Event	☒ After Seismic Event
ITS Equipment Type:	☒ Passive Mechanical	☐ Active Mechanical ☐ Electrical

Equipment Environmental Qualification (EEQ)

Environment ☒ Mild ☐ Harsh Contamination Class: C5 Radiation Class: R5	Hi Rad Service ☒ Yes ☐ No	Design Life (yrs) ☒ 40 ☐ Other ____

Parameter Type/Units	Parameter Value	Time Duration (number)	Time Units	WTP Document Number (BUYER)	Submittal Number (SELLER)
Normal					
Normal High Temperature (°F)	113	40	yrs	24590-PTF-U0D-W16T-00001	E-Note 1
Normal Low Temperature (°F)	59	40	yrs	24590-PTF-U0D-W16T-00001	E-Note 1
Normal High Relative Humidity (%RH)	90	40	yrs	24590-PTF-U0D-W16T-00001	E-Note 1
Normal Low Relative Humidity (%RH)	5	40	yrs	24590-PTF-U0D-W16T-00001	E-Note 1
Normal High Pressure (in.-w.g.)	0 (E-Note 2)	40	yrs	24590-PTF-U0D-W16T-00001	E-Note 1
Normal Low Pressure (in.-w.g.)	(-) 1.4 (E-Note 2)	40	yrs	24590-PTF-U0D-W16T-00001	E-Note 1
Normal Radiation Dose Rate (mR/hr)	533000 (E-Note 4)	40 (E-Note 7)	yrs	24590-PTF-U0D-W16T-00001	E-Note 1
Vibration Magnitude (g)	N/A	N/A	N/A	N/A	N/A
Vibration Frequency (Hz)	N/A	N/A	N/A	N/A	N/A
Additional Normal Information:	N/A				

Equipment Environmental Qualification (EEQ) *(continued)*

Parameter Type/Units	Parameter Value	Time Duration (number)	Time units	WTP Document Number (BUYER)	Submittal Number (SELLER)
Abnormal					
Abnormal High Temperature (°F)	127 8	8	hrs/yr	24590-PTF-U0D-W16T-00001	E-Note 1
Abnormal Low Temperature (°F)	40	8	hrs/yr	24590-PTF-U0D-W16T-00001	E-Note 1
Abnormal High Relative Humidity (%RH)	100c 8	1 8	hrs/yr	24590-PTF-U0D-W16T-00001	E-Note 1
Abnormal Low Relative Humidity (%RH)	6 8	24 8	hrs/yr	24590-PTF-U0D-W16T-00001	E-Note 1
Abnormal High Pressure (in.-w.g.)	4 (E-Note 2)	8	hrs/yr	24590-PTF-U0D-W16T-00001	E-Note 1
Abnormal Low Pressure (in.-w.g.)	(-) 7.3 (E-Note 2)	8	hrs/yr	24590-PTF-U0D-W16T-00001	E-Note 1
Abnormal Radiation Dose Rate (mR/hr)	533000 E-Note 4)	0 (E-Note 7)	yrs	24590-PTF-U0D-W16T-00001	E-Note 1
Wet Sprinkler System Present	No	N/A	N/A	24590-PTF-U0D-W16T-00001	E-Note 1
Additional Abnormal Information	100c = 100% RH condensing 8				
Design Basis Events (DBE)					
DBE High Temperature (°F)	135 8	1000	hrs	24590-PTF-U0D-W16T-00001	E-Note 1
DBE Low Temperature (°F)	40	1000	hrs	24590-PTF-U0D-W16T-00001	E-Note 1
DBE High Relative Humidity (%RH)	100c 8	40 8	hrs	24590-PTF-U0D-W16T-00001	E-Note 1
DBE Low Relative Humidity (%RH)	6	1000	hrs	24590-PTF-U0D-W16T-00001	E-Note 1
DBE High Pressure (in.-w.g.)	4 (E-Note 2)	1000	hrs	24590-PTF-U0D-W16T-00001	E-Note 1
DBE Low Pressure (in.-w.g.)	(-) 7.3 (E-Note 2)	1000	hrs	24590-PTF-U0D-W16T-00001	E-Note 1
DBE Radiation Dose Rate (mR/hr)	533000 (E-Note 4)	0 (E-Note 7)	yrs	24590-PTF-U0D-W16T-00001	E-Note 1
Flood Height (ft)	2.08	1000	hrs	24590-PTF-U0D-W16T-00001	E-Note 1
Submergence (ft)	N/A (E-Note 5)	N/A	N/A	N/A	N/A
Chemical/Spray Exposure	Yes	12.5 8	hrs	24590-PTF-U0D-W16T-00001	E-Note 1
Additional DBE Information	100c = 100% RH condensing 8				

DBE Chemical Exposure Details	
DBE Chemical Types/Concentrations	Nitric Acid (2M) Sodium Hydroxide (2M) B Sodium Permanganate (1M) Strontium Nitrate (1M) Process Condensate Water B

Interfaces (Electrical)	
Power Supply Voltage (VAC, VDC)	N/A
Power Supply Frequency (Hz)	N/A
Power Connection Method	N/A
I/O Signals to/from Equipment	N/A
I/O Connection Method	N/A

Interfaces (Mechanical)	
Mounting Configuration (orientation)	Vertical Mounted , Skirt, Located at 0'-0" in the Pre Treatment Facility, Column Lines K and 15
Mounting Method (bolts, welds, etc.)	Welded skirt to ring beam welded to embedment plates. Embedment plate details per 24590-PTF-DD-S13T-00039, 24590-PTF-DD-S13T-00036, 24590-PTF-DD-S13T-00043, and 24590-PTF-DD-S13T-00045 provided to the vendor in the material requisition
Auxiliary Devices	Pulse Jet Mixers: PWD-PJM-00021, PWD-PJM-00022, PWD-PJM-00023, PWD-PJM-00024, PWD-PJM-00025, PWD-PJM-00026, PWD-PJM-00027, PWD-PJM-00028; Charge Vessels: PWD-VSL-00121, PWD-VSL-00122, PWD-VSL-00123, PWD-VSL-00124, PWD-VSL-00125. All auxiliary equipment is located internal to the vessel

Equipment Seismic Qualification (ESQ)

Parameter	Title	Reference/Document Number	Version / Revision	Remarks
WTP Seismic Design Specification (BUYER)	Engineering Specification for Seismic Qualification of Seismic Category I/II Equipment and Tanks Engineering Specification for Seismic Qualification Criteria for Pressure Vessels	24590-WTP-3PS-SS90-T0001 24590-WTP-3PS-MV00-T0002	2 2	N/A
Specified Seismic Load B (BUYER)	Seismic Analysis of Pretreatment Building - WSGM In-Structure Response Spectra (ISRS)	24590-PTF-S0C-S15T-00057	A	CCN: 188859; WSGM ISRS Curves: 67, 68, and 69.
Design Seismic Load (SELLER	N/A	N/A	N/A	To be provided by the Buyer and E-Note 3 B
Qualification Method (SELLER)	N/A	N/A	N/A	Dynamic Analysis utilizing response spectra curves
Qualification Report Number (SELLER)	N/A	N/A	N/A	To be provided by the Buyer and E-Note 3 B
Submittal Number (BUYER)	N/A	N/A	N/A	N/A

EQUIPMENT QUALIFICATION DATASHEET (EQD)

Equipment Qualification Notes and Additional Information

E-Note 1: BNI (BUYER) shall perform Equipment Environmental Qualification in accordance with 24590-WTP-DC-ENG-06-001, Design Criteria for Equipment Seismic and Environmental Qualification.

E-Note 2: Where pressure is given in inches of water column (in-w.c.) in the source document, it is generally assumed that this is in reference to atmospheric pressure and is therefore equivalent to inches of water gage (in-w.g.)

E-Note 3: BNI (BUYER) shall perform Equipment Seismic Qualification in accordance with the listed parameters and the applicable specification requirements. (B)

E-Note 4: Radiation Dose Rates are for determining shielding requirements only for the black cell and are not at the source (vessel). Since the vessel is all metallic and the source has no neutron components for material embrittlement, the dose rates are of no concern on the vessel or its subcomponents.

E-Note 5: Flood height is 2.08 ft above the floor, bottom of vessel is above this level therefore, no submergence evaluation is required.

E-Note 6: Environmental data shown is for the room only.

E-Note 7: Normal, Abnormal, and DBE dose rates are the same, therefore, abnormal & DBE doses do not add to total integrated dose based on normal dose rates over 40 years.

DOE Radioactive Materials Disclaimer:
Please note that source, special nuclear and byproduct materials, as defined in the Atomic Energy Act of 1954 (AEA), are regulated at the US Department of Energy (DOE) facilities exclusively by DOE acting pursuant to its AEA authority. DOE asserts, that pursuant to the AEA, it has sole and exclusive responsibility and authority to regulate source, special nuclear, and byproduct materials at DOE-owned nuclear facilities. Information contained herein on radionuclides is provided for process description purposes only.

Screening / Evaluation Required? If yes per 24590-WTP-GPP-SREG-002, E&NS signature required below	X	Yes		No

Approval

Rev	Description	System Engineer	Vessel Engineer	Checked	Reviewed/ MET	E&NS	Approved	Date
0	Issued for Purchase	C. Hahn	H. K.	US/CS	N/A	N/A	S. Kirk	10/10/02
1	Revised as noted	N.C	H.K	YH/CS	JJ	N/A	MWH	08/28/03
2	Revised as noted	N. Crawford	H. Khurana	Y. Hovanski C. Slater	J. Julyk	N/A	C. Morley for M. Hoffmann	2/5/04
3	Added hydrodynamic loads, erosion allowances, and other revisions as noted.	N. Crawford	H. Khurana	Y. Hovanski R. Tiwari	J. Julyk	N/A	C. Morley for M. Hoffmann	9/8/04
4	Added note 11, deleted note 8 and revised note 9. Incorporated Environmental Qualifications. Revised as Noted.	N. Crawford	H. Khurana	SV/CS	J. Julyk	N/A	M. Hoffmann	03/04/05
5	Revised Notes on page 2 as noted	K.Ebbers	H. Khurana	SV/CS	RES	N/A	M. Hoffmann	07/28/05
6	Revised per note 12 on page 2 and as noted	K. Ebbers	H. Khurana	J. Polani	D. Adler C. Slater	N/A	J. Julyk	10/28/05
7	Revised per Note 14 and as noted, due to revised load conditions, new load conditions for MOB, HPAV, single overblow, and revised process conditions	T Campbell	M Seed	W Wilcox	B Makadia	G Hendricks	J Julyk	03/20/08
8	Revised per Note 15 and as noted by revision triangles.	T Campbell Theresa Campbell	W Wilcox	M Seed MASeed	D Adler	GDH G. Hendricks	J Julyk	5/24/10

REFERENCES for Data Sheet: 24590-PTF-MVD-PWD-00002, Rev 8
Vessel Tag: 24590-PTF-MV-PWD-VSL-00044

(For BNI Use only)

Data	Document #	Rev	Document Title/ Comments
Quality Level	24590-PTF-M6-PWD-00002001	0	*P&ID - PTF Plant Wash & disposal System Effluent Collection PWD-VSL-00044*
Seismic Category	24590-PTF-M6-PWD-00002001	0	*P&ID - PTF Plant Wash & disposal System Effluent Collection PWD-VSL-00044*
Design Specific Gravity	24590-WTP-RPT-ENG-07-007 24590-PTF-MVC-PWD-00028	0A 0A	*Process Stream Properties, Section 4.21.2.2* *Process Data for Plant Wash Vessel 24590-PTF-MV-PWD-VSL-00044*
Max Operating Volume	24590-PTF-MVC-PWD-00020	B	*Vessel Sizing Calculation for the Plant Wash Vessel (PWD-VSL-00044), Table 8-1*
Total Volume	24590-PTF-MVC-PWD-00020	B	*Vessel Sizing Calculation for the Plant Wash Vessel (PWD-VSL-00044), Table 8-1*
Inside Diameter	24590-PTF-MVC-PWD-00020	B	*Vessel Sizing Calculation for the Plant Wash Vessel (PWD-VSL-00044)*
Length TL-TL	24590-PTF-MVC-PWD-00020	B	*Vessel Sizing Calculation for the Plant Wash Vessel (PWD-VSL-00044)*
Operating Pressure (external)	24590-PTF-M6C-PVP-00017	A	*HADCRT Analysis of PTF PVP System at Various Operating Scenarios, Attachment C*
Design Pressure (internal)	24590-WTP-DB-ENG-01-001	1O	*Basis of Design*
Design Pressure (external)	24590-PTF-M6C-PVP-00017 24590-PTF-MVC-10-00003	A C	*HADCRT Analysis of PTF PVP System at Various Operating Scenarios, Attachment C* *PTF Vessel Cyclic Datasheet Inputs*
Operating Temp	24590-PTF-MVC-10-00003	C	*PTF Vessel Cyclic Datasheet Inputs*
Design Temp	24590-WTP-RPT-ENG-07-007	0A	*Process Stream Properties, Section 4.22*
Corrosion Allowance, Erosion allowance	24590-PTF-N1D-PWD-00001 24590-WTP-M0C-50-00004	5 E	*PWD-VSL-00044 - (PTF) - Plant Wash Vessel* *Wear Allowance for WTP Waste Slurry Systems, Table 10-7*
Materials of Construction	24590-PTF-N1D-PWD-00001	5	*PWD-VSL-00044 - (PTF) - Plant Wash Vessel*
Design Pressure (PJM)	24590-PTF-MVC-10-00003	C	*PTF Vessel Cyclic Datasheet Inputs*
Operating Pressure (PJM)	24590-PTF-MVC-10-00003	C	*PTF Vessel Cyclic Datasheet Inputs*
Operating Temperature (PJM)	N/A	N/A	*Same as parent vessel*
Cyclic Data (Vessel)	24590-PTF-MVC-10-00003	C	*PTF Vessel Cyclic Datasheet Inputs*
Cyclic Data (PJM)	24590-PTF-MVC-10-00003	C	*PTF Vessel Cyclic Datasheet Inputs*
Cyclic Data (Charge Vessels)	24590-PTF-MVC-10-00003	C	*PTF Vessel Cyclic Datasheet Inputs*
Charge Vessel (Design Press)	24590-PTF-MVC-10-00003	C	*PTF Vessel Cyclic Datasheet Inputs*
Hydrodynamic Loads	24590-WTP-MVC-50-00001	A	*Hydrodynamic Loads for Normal PJM Operation in Vessels with Newtonian Fluids / Section 8 for eight (8) PJMs*
Single PJM Overblow Loads	24590-WTP-MVC-50-00001	A	*Hydrodynamic Loads for Normal PJM Operation in Vessels with Newtonian Fluids*
PJM Overblow Loads	24590-WTP-MVC-50-00011	B	*Pulse Jet Mixer Overblow Vessel Loads*
Single Overblow Cycles	24590-PTF-MVC-10-00003	C	*PTF Vessel Cyclic Datasheet Inputs (24590-PTF-MVE-10-00004)*
Multiple Overblow Cycles	24590-PTF-MVC-10-00003	C	*PTF Vessel Cyclic Datasheet Inputs (24590-PTF-MVE-10-00004)*

REFERENCES for Data Sheet: 24590-PTF-MVD-PWD-00002, Rev 8
Vessel Tag: 24590-PTF-MV-PWD-VSL-00044

(For BNI Use only)

Data	Document #	Rev	Document Title/ Comments
Nozzle Loads	CCN 127617	N/A	*Nozzle Loads for UFP-VSL-00001A/B, PWD-VSL-00044, Official*
Nozzle Design Pressures and Temperatures	24590-PTF-M6X-PWD-00113	2	*Pipeline List for P&ID 24590-PTF-M6-PWD-00046, Rev 2*
	24590-PTF-M6X-PWD-00325	0	*MS Line List for 24590-PTF-M6-PWD-00002001, Rev 0*
	24590-PTF-M6X-UFP-00148	0	*MS Line List for P&ID 24590-PTF-M6-UFP-00007007, Rev 0*
	24590-PTF-M6X-UFP-00174	0	*MS Line List for P&ID 24590-PTF-M6-UFP-00008007, Rev 0*
	24590-PTF-M6X-UFP-00199	0	*MS Line List for P&ID 24590-PTF-M6-UFP-00009006, Rev 0*
	24590-PTF-M6X-UFP-00362	0	*MS Line List for P&ID 24590-PTF-M6-UFP-00011005, Rev 0*
Overflow Sizing	24590-PTF-MVC-PWD-00020	B	*Vessel Sizing Calculation for the Plant Wash Vessel (PWD-VSL-00044)*
	24590-PTF-MVC-PWD-00038	B	*Overflow Sizing for Vessel PWD-VSL-00044*

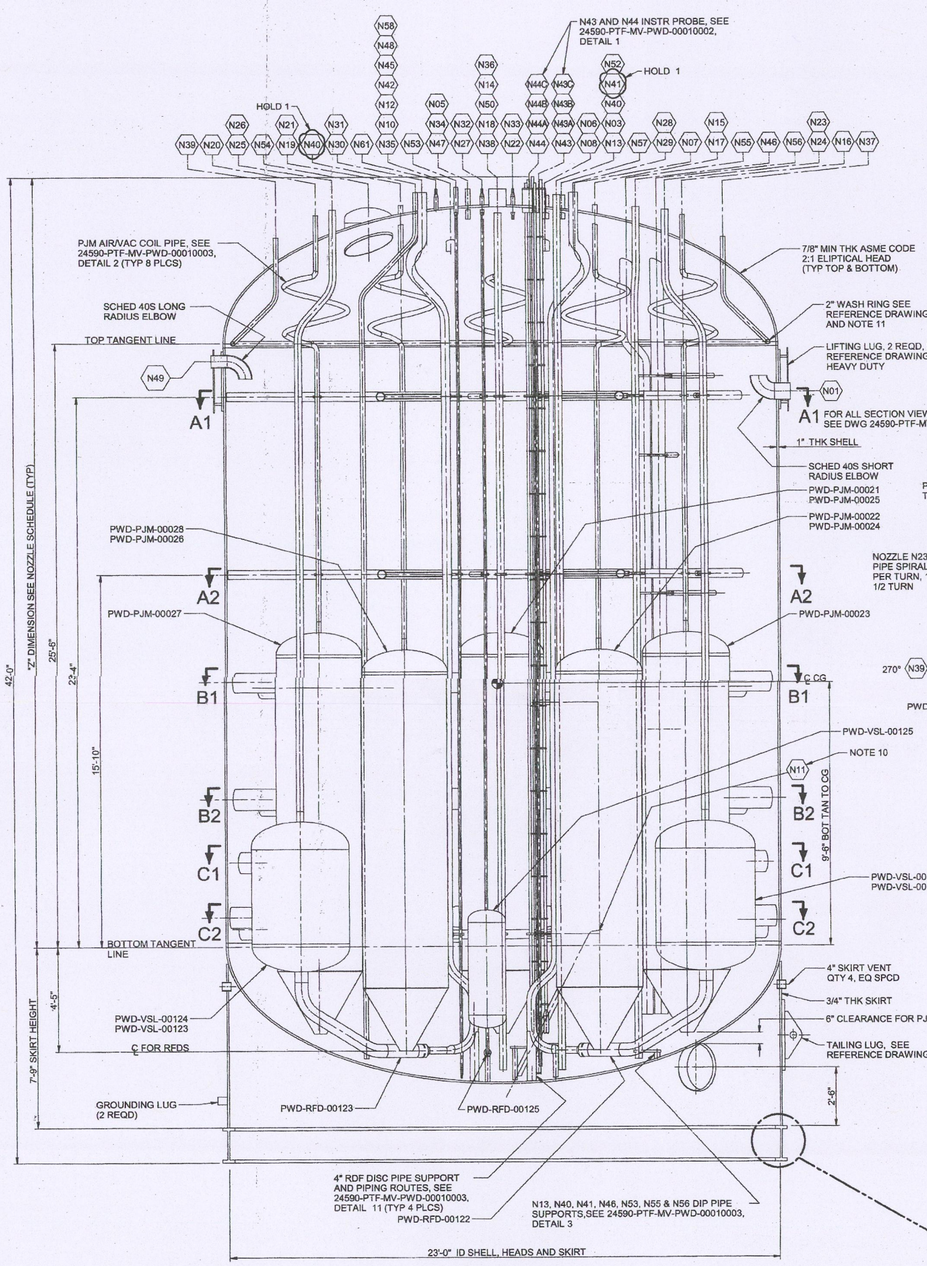

ELEVATION

SEE PLAN VIEW FOR TRUE ORIENTATION OF NOZZLES AND COMPONENTS

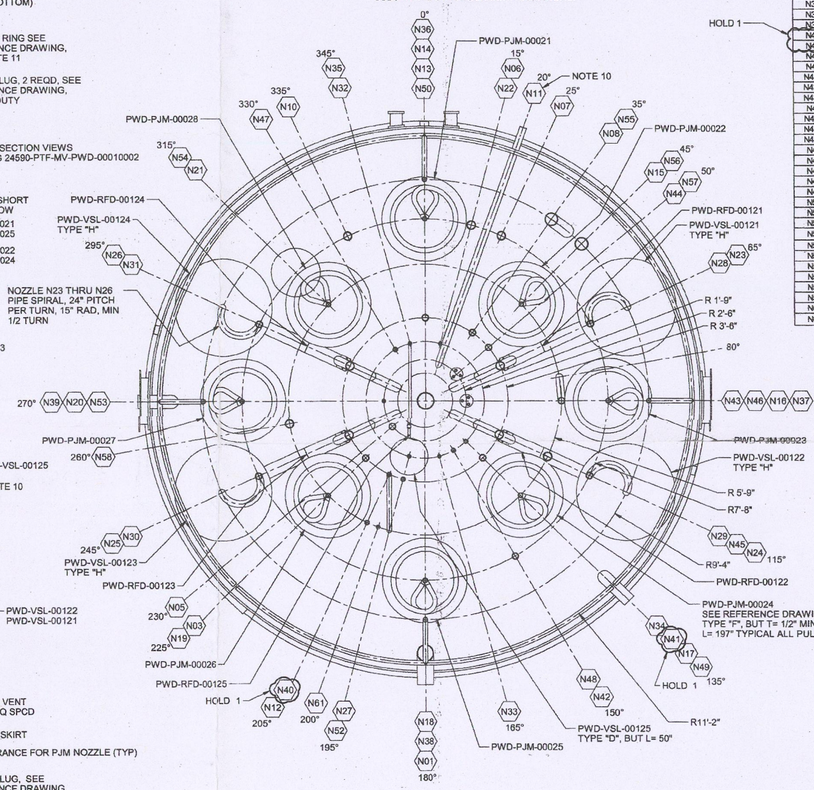

PLAN

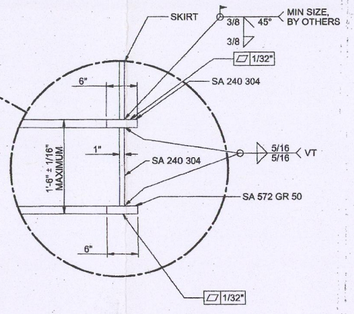

RING BEAM DETAIL

INTEGRAL REINFORCEMENTS		
NOZZLE	REINF. DIA	THICK
N13	10"	1 1/4"
N40	6"	1 1/4"
N46	12 3/4"	1 1/8"
N55	12 3/4"	1 1/8"
N56	12 3/4"	1 1/8"

GENERAL NOTES: CONTINUTED FROM ZONE D-2

10. NOZZLE 11 IS TO HAVE A 1:50 (MIN) SLOPE ON ITS HORIZONTAL SECTION, TOWARDS CENTER OF VESSEL, W/ A 7" PROJECTION PAST SHELL OF VESSEL.
11. WASH RINGS ARE TO BE SUPPORTED, FROM TOP, BY 1" SCHED 160S HANGERS @ 4 LOCATIONS EACH:

    NORTH SEGMENT: 320°, 340°, 20°, 40°
    EAST SEGMENT: 50°, 70°, 110°, 130°
    SOUTH SEGMENT: 140°, 160°, 200°, 220°
    WEST SEGMENT: 230°, 250°, 290°, 310°
12. WELDS FOR INTERNAL PIPES ACTING AS SUPPORTS ARE TO BE FULL PENETRATION WELDS WITH 1/4" MIN CAPPING FILLET-WELDS (WHERE POSSIBLE), UNLESS OTHERWISE NOTED OR APPROVED BY BUYER.
13. THIS DOCUMENT CONTAINS INFORMATION PERTINENT TO AN ACCIDENT ANALYSIS CALCULATION AND RECEIVES A SCREENING FROM E&NS, IN ACCORDANCE WITH PROCEDURES, ANYTIME THE DOCUMENT IS MODIFIED.
14. DIP LINES FOR NOZZLES N40, N46 AND N55 HAVE PAIRS OF 45° ELBOWS LOCATED IN THE UPPER HEAD SPACE OF THE VESSEL TO JOG THE DIP LINES TO THE POSITIONS INDICATED ON THIS SHEET.
15. WHERE LENGTH OF SUPPORT BRACKET (I.E. CENTER LINE OF SUPPORTED PIPE TO FAR END OF 2" PIPE) IS 12" OR LESS, THE FABRICATOR MAY USE JUST 1" OR 1.5" (DEPENDENT OR SUPPORTED DIP PIPE DIAMETER) THICK PLATE WITH THE SIDES OF THE PLATE BEING PARALLEL TO EACH OTHER IN-LIEU OF THE 2" PIPE.
16. ALL PROCESS PIPES ARE TO MAINTAIN A MINIMUM 1:20 SLOPE WITH NO INTERMEDIARY HIGH POINTS, TO MITIGATE ANY POOLING OF FLUID IN THE PROCESS LINES. THE CHARGE VESSEL DISCHARGE LINES ARE TO BE SLOPED TOWARDS THE RFDS, WITH RFDS AS THE LOW POINT. THE WASH RINGS ARE EXEMPTED FROM THIS SLOPE REQUIREMENT.
17. DEPICTED WELDS ARE MINIMUN REQUIRED SIZES. FABRICATOR MAY INCREASE SIZES OR SUBSTITUTE STRONGER CONFIGURATIONS.

NOZZLE	SIZE	SCHED/WALL	SERVICE/REMARKS	"Z" DIM	REF DWG-DET	CONN. PIPE SCHED.
N01	8"	80S	OVERFLOW	24'-6"	24590-WTP-MV-M59T-00016001 DET 3	8"-10S
N02			NOT USED			
N03	3"	80S	SPARE	31'-9"	24590-WTP-MV-M59T-00016001 DET 2	CAPPED
N04			NOT USED			
N05	3"	80S	SPARE	32'-0"	24590-WTP-MV-M59T-00016001 DET 2	CAPPED
N06	4"	80S	INLET	30'-7"	24590-WTP-MV-M59T-00016001 DET 2	4"-40S
N07	4"	80S	INLET	30'-7"	24590-WTP-MV-M59T-00016001 DET 2	4"-40S
N08	3"	80S	INLET	31'-9"	24590-WTP-MV-M59T-00016001 DET 2	3"-40S
N09			NOT USED			
N10	4"	80S	INLET	30'-7"	24590-WTP-MV-M59T-00016001 DET 2	4"-40S
N11	2"	160S	OUTLET TO EJECTOR	0'-8"	24590-WTP-MV-M59T-00016001 DET 3	2"-40S
N12	2"	160S	AIR PURGE	31'-3"	24590-WTP-MV-M59T-00016001 DET 2	2"-40S
N13	3"	160S	INLET WITH DIP PIPE	31'-9"	24590-WTP-MV-M59T-00016001 DET 4, SEE NOTE 8	3"-40S
N14	2"	160S	AIR/VACUUM TO PWD-PJM-00021	30'-7"	24590-WTP-MV-M59T-00016001 DET 3	2"-40S
N15	2"	160S	AIR/VACUUM TO PWD-PJM-00022	31'-3"	24590-WTP-MV-M59T-00016001 DET 3	2"-40S
N16	2"	160S	AIR/VACUUM TO PWD-PJM-00023	30'-7"	24590-WTP-MV-M59T-00016001 DET 3	2"-40S
N17	2"	160S	AIR/VACUUM TO PWD-PJM-00024	31'-3"	24590-WTP-MV-M59T-00016001 DET 3	2"-40S
N18	2"	160S	AIR/VACUUM TO PWD-PJM-00025	30'-7"	24590-WTP-MV-M59T-00016001 DET 3	2"-40S
N19	2"	160S	AIR/VACUUM TO PWD-PJM-00026	31'-3"	24590-WTP-MV-M59T-00016001 DET 3	2"-40S
N20	2"	160S	AIR/VACUUM TO PWD-PJM-00027	30'-7"	24590-WTP-MV-M59T-00016001 DET 3	2"-40S
N21	2"	160S	AIR/VACUUM TO PWD-PJM-00028	31'-3"	24590-WTP-MV-M59T-00016001 DET 3	2"-40S
N22	2" OD x 1"	160S	SPARE	31'-11"	24590-WTP-MV-M59T-00016001 DET 7	CAPPED
N23	3"	80S	AIR/VACUUM TO PWD-VSL-00121	30'-7"	24590-WTP-MV-M59T-00016001 DET 3	3"-40S
N24	3"	80S	AIR/VACUUM TO PWD-VSL-00122	30'-7"	24590-WTP-MV-M59T-00016001 DET 3	3"-40S
N25	3"	80S	AIR/VACUUM TO PWD-VSL-00123	30'-7"	24590-WTP-MV-M59T-00016001 DET 3	3"-40S
N26	3"	80S	AIR/VACUUM TO PWD-VSL-00124	30'-7"	24590-WTP-MV-M59T-00016001 DET 3	3"-40S
N27	2" OD x 1"	160S	AIR/VACUUM TO PWD-VSL-00125	31'-11"	24590-WTP-MV-M59T-00016001 DET 7	1"-40S
N28	4"	80S	OUTLET FROM PWD-RFD-00121	31'-9"	24590-WTP-MV-M59T-00016001 DET 3	4"-40S
N29	4"	80S	OUTLET FROM PWD-RFD-00122	31'-9"	24590-WTP-MV-M59T-00016001 DET 3	4"-40S
N30	4"	80S	OUTLET FROM PWD-RFD-00123	31'-9"	24590-WTP-MV-M59T-00016001 DET 3	4"-40S
N31	4"	80S	OUTLET FROM PWD-RFD-00124	31'-9"	24590-WTP-MV-M59T-00016001 DET 3	4"-40S
N32	2" OD x 1"	160S	OUTLET FROM PWD-RFD-00125	31'-11"	24590-WTP-MV-M59T-00016001 DET 7	1"-40S
N33	2" OD x 1"	160S	SPARE	31'-11"	24590-WTP-MV-M59T-00016001 DET 7	CAPPED
N34	2"	160S	SPARE	31'-11"	24590-WTP-MV-M59T-00016001 DET 2	CAPPED
N35	4"	80S	INLET	30'-7"	24590-WTP-MV-M59T-00016001 DET 2	4"-40S
N36	2"	80S	INLET TO WASH RING	29'-8"	24590-WTP-MV-M59T-00016001 DET 3	2"-40S
N37	2"	80S	INLET TO WASH RING	29'-8"	24590-WTP-MV-M59T-00016001 DET 3	2"-40S
N38	2"	80S	INLET TO WASH RING	29'-8"	24590-WTP-MV-M59T-00016001 DET 3	2"-40S
N39	2"	80S	INLET TO WASH RING	29'-8"	24590-WTP-MV-M59T-00016001 DET 3	2"-40S
N40	2"	160S	INLET WITH DIP PIPE	31'-9"	24590-WTP-MV-M59T-00016001 DET 4	2"-40S
N41	3"	80S	INLET WITH DIP PIPE	31'-9"	24590-WTP-MV-M59T-00016001 DET 4	3"-40S
N42	3"	80S	INLET	30'-7"	24590-WTP-MV-M59T-00016001 DET 2	3"-40S
N43	6"	1/2" WALL	INSTRUMENTATION	32'-2"	24590-WTP-MV-M59T-00016003 DET 26, SEE NOTE 9	N/A
N43A	1"	160S	BALANCE	32'-7"	24590-WTP-MV-M59T-00016003 DET 26, SEE NOTE 9	1"-40S
N43B	1"	160S	DENSITY	32'-8"	24590-WTP-MV-M59T-00016003 DET 26, SEE NOTE 9	1"-40S
N43C	1"	160S	LEVEL	32'-9"	24590-WTP-MV-M59T-00016003 DET 26, SEE NOTE 9	1"-40S
N44	6"	1/2" WALL	INSTRUMENTATION	32'-2"	24590-WTP-MV-M59T-00016003 DET 26, SEE NOTE 9	N/A
N44A	1"	160S	BALANCE	32'-7"	24590-WTP-MV-M59T-00016003 DET 26, SEE NOTE 9	1"-40S
N44B	1"	160S	DENSITY	32'-8"	24590-WTP-MV-M59T-00016003 DET 26, SEE NOTE 9	1"-40S
N44C	1"	160S	LEVEL	32'-9"	24590-WTP-MV-M59T-00016003 DET 26, SEE NOTE 9	1"-40S
N45	4"	80S	INLET	31'-3"	24590-WTP-MV-M59T-00016001 DET 2	4"-40S
N46	3"	80S	INLET WITH DIP PIPE	31'-3"	24590-WTP-MV-M59T-00016001 DET 4	3"-40S
N47	2"	160S	INLET	31'-11"	24590-WTP-MV-M59T-00016001 DET 2	2"-40S
N48	2"	160S	SPARE	31'-11"	24590-WTP-MV-M59T-00016001 DET 2	CAPPED
N49	6"	80S	SPARE	24'-10"	24590-WTP-MV-M59T-00016001 DET 3	CAPPED
N50	8"	80S	VESSEL VENT	32'-2"	24590-WTP-MV-M59T-00016001 DET 1	8"-10S
N51			NOT USED			
N52	2"	160S	SPARE	31'-9"	24590-WTP-MV-M59T-00016001 DET 2	CAPPED
N53	2" OD x 1"	160S	TEMPERATURE	32'-0"	24590-WTP-MV-M59T-00007, ASSY 1, DET 1	3/4"-10S
N54	24"	PLATE 3/8" THK	MANWAY	30'-10"	24590-WTP-MV-M59T-00017 DET 1	CAPPED
N55	6"	80S	INLET WITH DIP PIPE	29'-10"	24590-WTP-MV-M59T-00016001 DET 4	6"-10S
N56	6"	80S	INLET WITH DIP PIPE	29'-10"	24590-WTP-MV-M59T-00016001 DET 4	6"-10S
N57	3"	80S	INLET	31'-9"	24590-WTP-MV-M59T-00016001 DET 2	3"-40S
N58	4"	80S	SPARE	31'-3"	24590-WTP-MV-M59T-00016001 DET 2	CAPPED
N59			NOT USED			
N60			NOT USED			
N61	2" OD x 1/2"	160S	FORCED AIR PURGE	31'-3"	25490-WTP-M59T-00016001 DET 5	1/2"-40S

GENERAL NOTES:

1. RFD PUMP SHALL BE PROVIDED BY BUYER FOR SELLER TO INSTALL. ALL OTHER INTERNALS SHALL BE DESIGNED, PROVIDED AND INSTALLED BY SELLER.
2. FOR DIP LEGS USE 2" BOTTOM HEAD CLEARANCE, UNLESS SHOWN OTHERWISE.
3. "Z" DIMENSION MEASURED FROM BOTTOM T.L. TO C.L. OF NOZZLE OR FACE OF NOZZLE.
4. RING BEAM TO BE SHIPPED AHEAD OF VESSEL TO FIELD CONSTRUCTION FOR INSTALLATION BY OTHERS.
5. ADDED PJM AIR/VAC INLET PIPES WITH HELICAL COILS, INTERNAL SUPPORTS AND BRACINGS.
6. CONTENTS OF THIS DOCUMENT ARE DANGEROUS WASTE PERMIT AFFECTING.
7. THIS DRAWING IN PART SUPERSEDES 24590-PTF-MV-PWD-00010, REV 1. AND INCLUDES INFORMATION FROM THE FOLLOWING CHANGE DOCUMENTS:

   24590-PTF-MVLN-PWD-00001
   24590-PTF-MVN-PWD-00008
   24590-PTF-MVN-PWD-00019
   24590-PTF-MVN-PWD-00026
   24590-PTF-MVN-PWD-00028
   24590-PTF-MVN-PWD-00031
   24590-PTF-MVN-M59T-00026
   24590-WTP-M6N-M80T-00002
   24590-WTP-M6N-M80T-00003
   24590-WTP-SDDR-MS-07-00050
8. PER 24590-WTP-MV-M59T-00016001, DETAIL 4, BUT ADD A 1/4" Ø SIPHON-BREAK HOLE NEAR TOP OF DIP LEG.
9. PER 24590-WTP-MV-M59T-00016003, DETAIL 26, BUT SUPPORTED AS INDICATED ON 24590-PTF-MV-PWD-00010003.

HOLD:

1. NOZZLES N40 AND N41 ARE ON HOLD FOR NOZZLE SCHEDULE, POSSIBLE INTEGRAL REINFORCEMEMT, DIP LEGS AND DIP LEG SUPPORTS. LOCATION OF NOZZLES ON TOP HEAD MAY BE MARKED, AND THE NORMINAL SIZE HOLE CUT.

THIS DRAWING TO BE READ IN CONJUNCTION WITH MECHANICAL SYSTEMS DATA SHEET 24590-PTF-MVD-PWD-00002

PLEASE NOTE THAT SOURCE, SPECIAL NUCLEAR AND BYPRODUCT MATERIALS, AS DEFINED IN THE ATOMIC ENERGY ACT OF 1954 (AEA), ARE REGULATED AT THE U.S. DEPARTMENT OF ENERGY (DOE) FACILITIES EXCLUSIVELY BY DOE ACTING PURSUANT TO ITS AEA AUTHORITY. DOE ASSERTS, THAT PURSUANT TO THE AEA, IT HAS SOLE AND EXCLUSIVE RESPONSIBILITY AND AUTHORITY TO REGULATE SOURCE, SPECIAL NUCLEAR, AND BYPRODUCT MATERIALS AT DOE-OWNED NUCLEAR FACILITIES. INFORMATION CONTAINED HEREIN ON RADIONUCLIDES IS PROVIDED FOR PROCESS DESCRIPTION PURPOSES ONLY.

Please note that source, special nuclear, and byproduct materials, as defined in the Atomic Energy Act of 1954 (AEA) are regulated at the U. S. Department of Energy (DOE) facilities exclusively by DOE acting pursuant to its AEA authority. DOE asserts, that pursuant to AEA, it has sole and exclusive responsibility and authority to regulate source, special nuclear, and byproduct materials at DOE-owned nuclear facilities. Information contained herein on radionuclides is provided for process description purposes only.

DRAWINGS INDEX		
DWG NO	REV	TITLE
24590-PTF-MV-PWD-00010001	0	EQUIPMENT ASSEMBLY PLANT WASH VESSEL PWD-VSL-00044 SHEET 1 OF 3
24590-PTF-MV-PWD-00010002	0	SECTIONS & DETAILS PLANT WASH VESSEL PWD-VSL-00044 SHEET 2 OF 3
24590-PTF-MV-PWD-00010003	0	DETAILS PLANT WASH VESSEL PWD-VSL-00044 SHEET 3 OF 3

REFERENCE DRAWINGS	
DWG NO	TITLE
24590-WTP-MV-M59T-00001	PRESSURE VESSEL TOLERANCES STANDARD DETAILS
24590-WTP-MV-M59T-00004	PULSE JET MIXERS STANDARD DETAILS
24590-WTP-MV-M59T-00007	THERMOWELL CONNECTION STANDARD DETAILS
24590-WTP-MV-M59T-00011	WASH RINGS STANDARD DETAILS
24590-WTP-MV-M59T-00012	GROUNDING LUG STANDARD DETAILS
24590-WTP-MV-M59T-00013	CHARGE VESSELS STANDARD DETAILS
24590-WTP-MV-M59T-00014	RFD PUMPS DETAILS
24590-WTP-MV-M59T-00016001	VESSEL CONNECTIONS STANDARD DETAILS SHT 1 OF 3
24590-WTP-MV-M59T-00016003	VESSEL CONNECTIONS STANDARD DETAILS SHT 3 OF 3
24590-WTP-MV-M59T-00017	VESSEL INSPECTION MANWAY STANDARD DETAILS
24590-PTF-M6-PWD-00002001	P&ID - PTF PLANT WASH & DISPOSAL SYSTEM EFFLUENT COLLECTION PWD-VSL-00044
24590-PTF-M6-PWD-000046	P&ID - PTF PLANT WASH & DISPOSAL UTILITY SERVICES PLANT WASH RACK
24590-PTF-M6-UFP-00007007	P&ID - PTF ULTRAFILTRATION PROCESS SYSTEM - VESSEL PJM UFP-VSL-00001 A/B PWD-VSL-00044
24590-PTF-M6-UFP-00008007	P&ID - PTF ULTRAFILTRATION PROCESS SYSTEM VESSEL PJM UFP-VSL-00001A/B PWD-VSL-00044
24590-PTF-M6-UFP-00009006	P&ID PTF ULTRAFILTRATION PROCESS SYSTEM VESSEL RFD UFP-VSL-00062C/PWD-VSL-00044
24590-PTF-M6-UFP-00011005	P&ID - PTF ULTRAFILTRATION PROCESS SYSTEM VESSEL PJM/RFD UFP-VSL-00062C/PWD-VSL-00044

REV	DESCRIPTION	ORG	CHKD	RVWD	APVD	DATE
0	ISSUED FOR PURCHSE PER NOTE 7					5/25/10

REVISION HISTORY

ISSUED BY RPP-WTP PDC		
PROJECT No.	24590	
SITE	HANFORD	
AREA	200E	
BUILDING No.	10	
ISSUE STAMP		
	BY	DATE
ORIGINATOR		25 May 10
CHECKER		5/25/10
APPROVER		5/25/10
REVIEWER		5/25/10

CONTENT APPLICABLE TO ALARA? [XX] YES [ ] NO

ADR NO. 24590-WTP-ACRM-03-008 REV: 2

E&NS SCREENING REQUIRED [X] YES [ ] NO E&NS INITIAL IF YES GDH

RIVER PROTECTION PROJECT
WASTE TREATMENT PLANT
2435 STEVENS CENTER PLACE
RICHLAND, WA 99354

CONTRACT No: DE-AC27-01RV14136

EQUIPMENT ASSEMBLY PLANT WASH VESSEL PWD-VSL-00044 SHEET 1 OF 3

SCALE: NONE

24590-PTF-MV-PWD-00010001

REV 0

SCREENING IS REQUIRED FOR DRAWING TYPES IDENTIFIED IN 24590-WTP-GPP-SREG-002

"E" SIZE - 44x34

COMPUTER GENERATED - MANUAL DESIGN CHANGES NOT PERMITTED

05/21/2010 7:06:31 AM

FORM E_MASTER 02/2003

GENERAL NOTES:

1. FOR GENERAL NOTES, SEE 24590-PTF-MV-PWD-00010001.

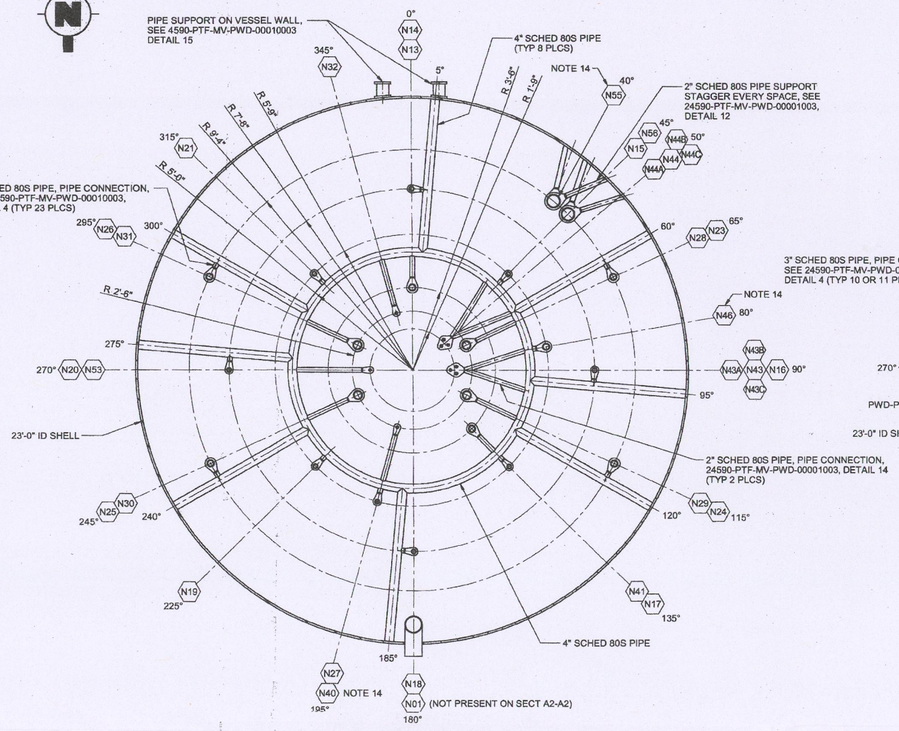

SECTION A1-A1 ℄ UPPER RING SUPPORT @ EL 23'-4" FROM BOT TL

SECTION A2-A2 ℄ LOWER RING SUPPORT @ EL 15'-10" FROM BOT TL

24590-PTF-MV-PWD-00010001
NOTE: SOME COMPOENTS REMOVED FOR CLARITY

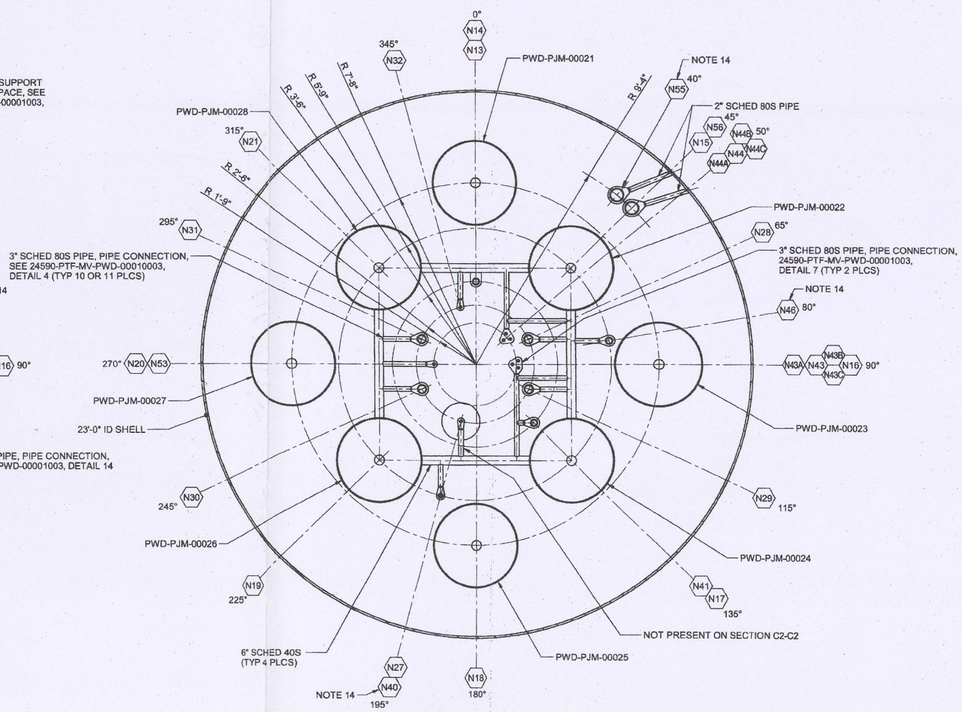

SECTION B1-B1 ℄ UPPER PJM CROSS SUPPORTS @ EL 8'-9" FROM BOT TL

SECTION C2-C2 ℄ LOWER PJM CROSS SUPPORTS @ EL 1'-3" FROM BOT TL

INNER SUPPORT SHOWN
24590-PTF-MV-PWD-00010001
NOTE: SOME COMPOENTS REMOVED FOR CLARITY

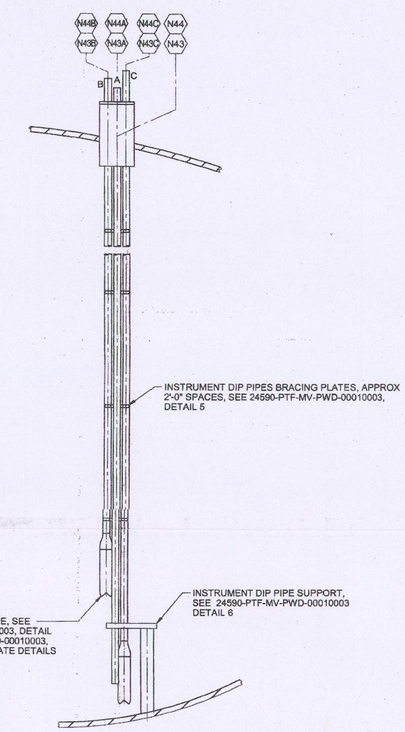

DETAIL 1
24590-PTF-MV-PWD-00010001

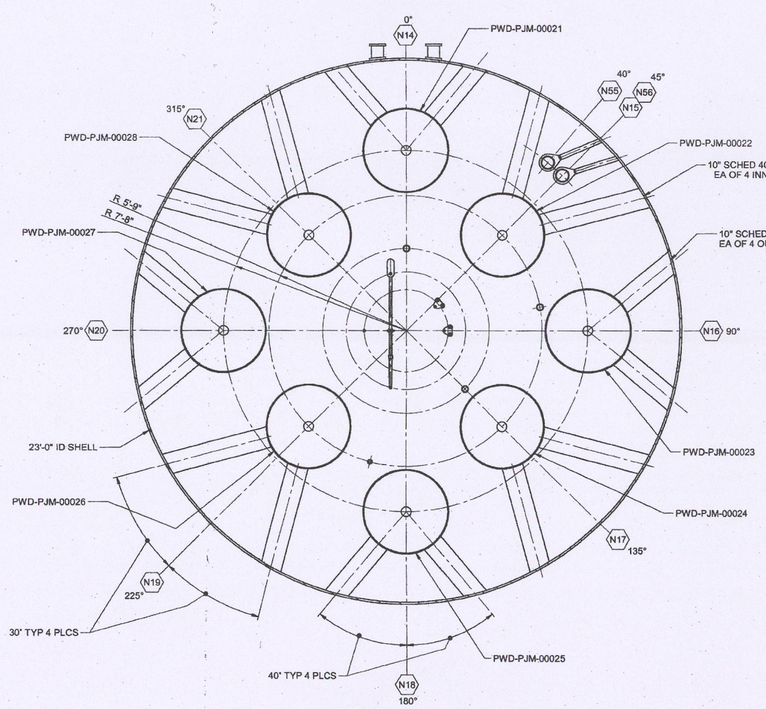

SECTION B1-B1 ℄ UPPER OUTER PJM SUPPORT @ EL 11-3" FROM BOT TL
UPPER INNER PJM SUPPORT @ EL 10'-10" FROM BOT TL

SECTION B2-B2 ℄ MIDDLE OUTER PJM SUPPORT @ EL 6'-3" FROM BOT TL
MIDDLE INNER PJM SUPPORT @ EL 5'-10" FROM BOT TL

24590-PTF-MV-PWD-00010001
NOTE: SOME COMPOENTS REMOVED FOR CLARITY

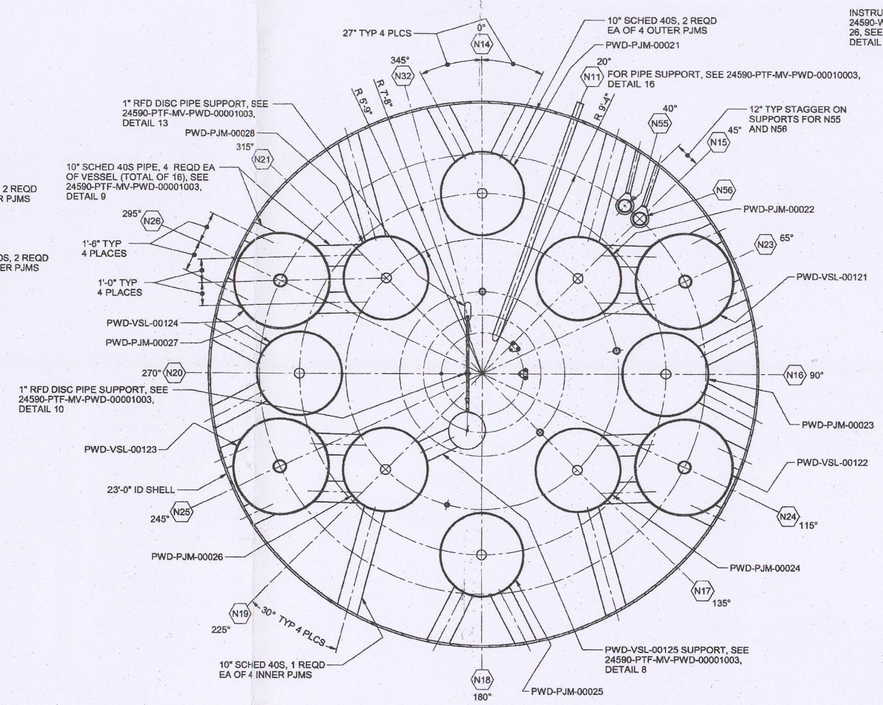

SECTION C1-C1 ℄ LOWER OUTER PJM SUPPORT @ EL 1'-3" FROM BOT TL
LOWER INNER PJM SUPPORT @ EL 0'-10" FROM BOT TL

OUTER SUPPORT SHOWN
24590-PTF-MV-PWD-00010001
NOTE: SOME COMPOENTS REMOVED FOR CLARITY

DRAWINGS INDEX		
DWG NO	REV	TITLE
24590-PTF-MV-PWD-00010001	0	EQUIPMENT ASSEMBLY PLANT WASH VESSEL PWD-VSL-00044 SHEET 1 OF 3
24590-PTF-MV-PWD-00010002	0	SECTIONS & DETAILS PLANT WASH VESSEL PWD-VSL-00044 SHEET 2 OF 3
24590-PTF-MV-PWD-00010003	0	DETAILS PLANT WASH VESSEL PWD-VSL-00044 SHEET 3 OF 3

PLEASE NOTE THAT SOURCE, SPECIAL NUCLEAR AND BYPRODUCT MATERIALS, AS DEFINED IN THE ATOMIC ENERGY ACT OF 1954 (AEA), ARE REGULATED AT THE U.S. DEPARTMENT OF ENERGY (DOE) FACILITIES EXCLUSIVELY BY DOE ACTING PURSUANT TO ITS AEA AUTHORITY. DOE ASSERTS, THAT PURSUANT TO THE AEA, IT HAS SOLE AND EXCLUSIVE RESPONSIBILITY AND AUTHORITY TO REGULATE SOURCE, SPECIAL NUCLEAR, AND BYPRODUCT MATERIALS AT DOE-OWNED NUCLEAR FACILITIES. INFORMATION CONTAINED HEREIN ON RADIONUCLIDES IS PROVIDED FOR PROCESS DESCRIPTION PURPOSES ONLY.

REV	DESCRIPTION	ORG	CHKD	RVWD	APVD	DATE
0	ADDED SECTIONS AND DETAILS DRAWING	KXH	SD	MRS	MJ	5/25/10

Q

REVISION HISTORY

ISSUED BY RPP-WTP PDC

PROJECT No.	24590	
SITE	HANFORD	
AREA	200E	
BUILDING No.	10	
ISSUE STAMP		

	BY	DATE
ORIGINATOR	[signature]	23-May-10
CHECKER	[signature]	5/25/10
APPROVER	[signature]	05/25/10
REVIEWER	[signature]	5/25/10

CONTENT APPLICABLE TO ALARA? [XX] YES [ ] NO
ADR NO. 24590-WTP-ADR-M-03-008 REV: 2
EMS SCREENING REQUIRED [XX] YES [ ] NO EMS INITIAL IF YES [initials]

RIVER PROTECTION PROJECT
WASTE TREATMENT PLANT
2435 STEVENS CENTER PLACE
RICHLAND, WA 99354

CONTRACT No: DE-AC27-01RV14136

SECTIONS & DETAILS
PLANT WASH VESSEL
PWD-VSL-00044
SHEET 2 OF 3

SCALE: NONE

24590-PTF-MV-PWD-00010002 REV 0

SCREENING IS REQUIRED FOR DRAWING TYPES IDENTIFIED IN 24590-WTP-GPP-SREG-002

8½" SIZE - 44x34

COMPUTER GENERATED - MANUAL DESIGN CHANGES NOT PERMITTED

P22222 LB

05/21/2010 3:26:25 PM

FORM E_MASTER 03/2003

GENERAL NOTES:

1. FOR GENERAL NOTES, SEE 24590-PTF-MV-PWD-00010001.

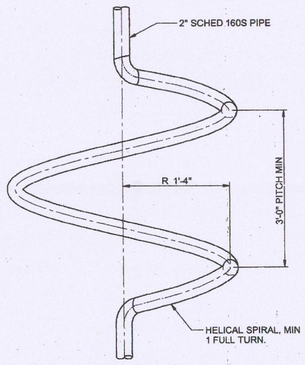

DETAIL 2
24590-PTF-MV-PWD-00010001

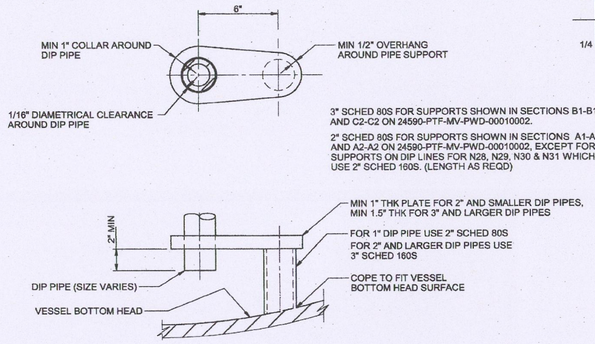

DETAIL 3
24590-PTF-MV-PWD-00010001

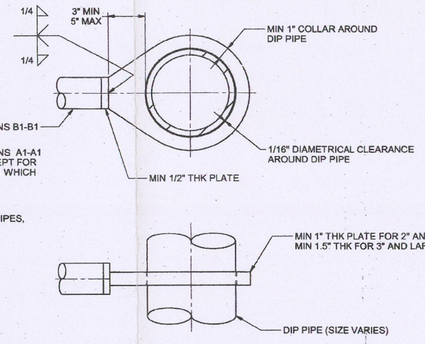

DETAIL 4
24590-PTF-MV-PWD-00010002
NOTE 15

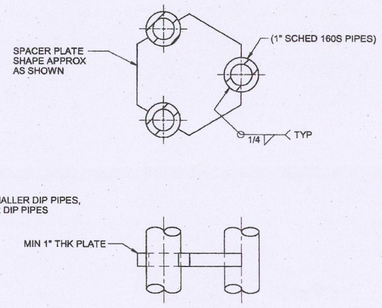

DETAIL 5
24590-PTF-MV-PWD-00010002

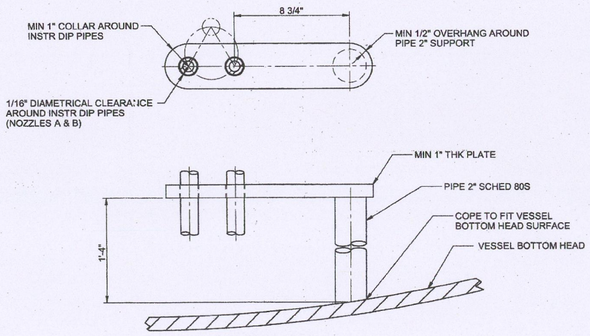

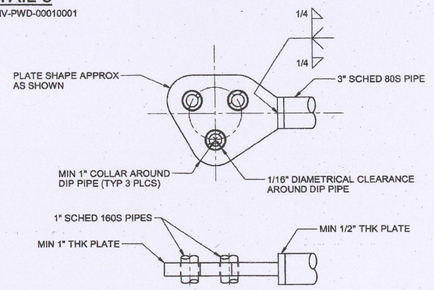

DETAIL 7
24590-PTF-MV-PWD-00010002

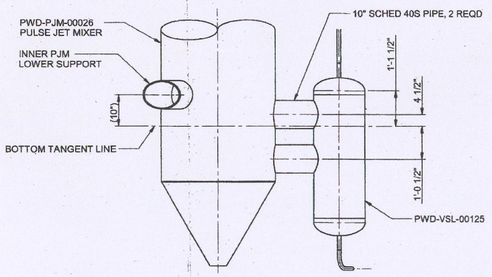

DETAIL 8
24590-PTF-MV-PWD-00010002

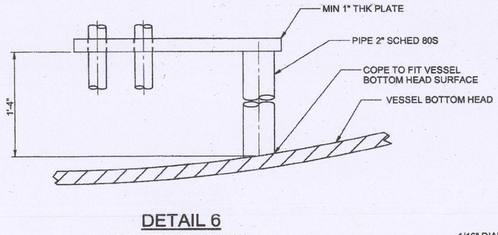

DETAIL 6
24590-PTF-MV-PWD-00010002

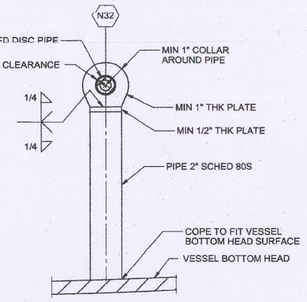

DETAIL 10
24590-PTF-MV-PWD-00010002

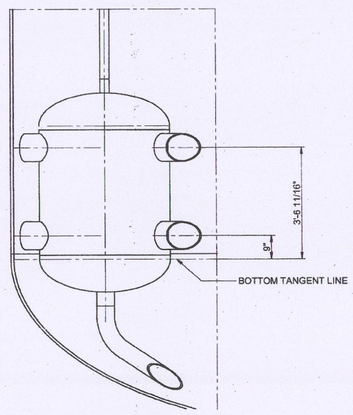

DETAIL 9
24590-PTF-MV-PWD-00010002

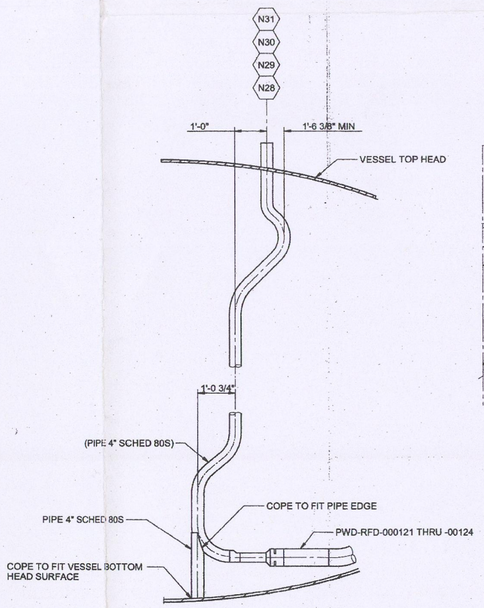

DETAIL 11
24590-PTF-MV-PWD-00010001

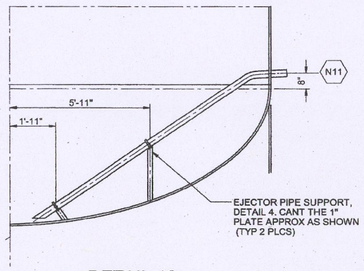

DETAIL 16
24590-PTF-MV-PWD-00010002

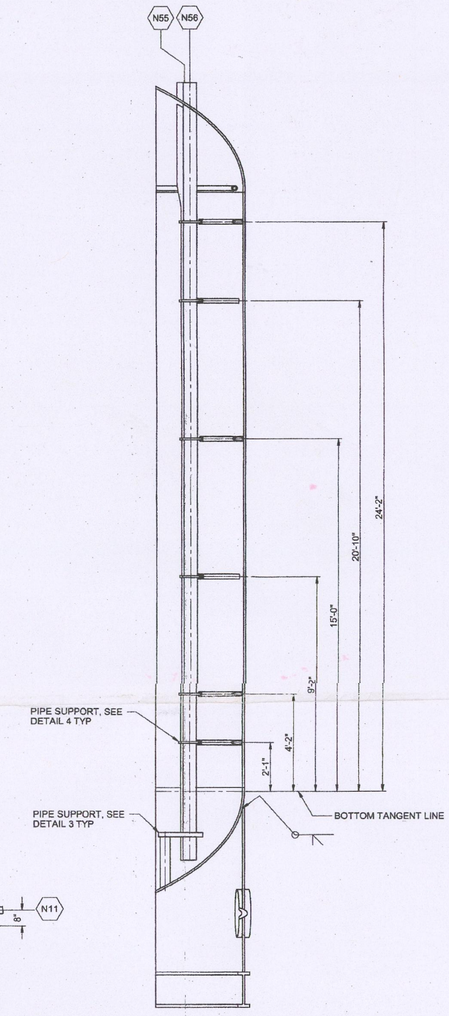

DETAIL 12
24590-PTF-MV-PWD-00010002

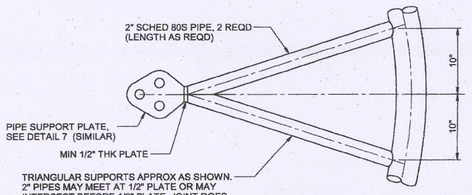

DETAIL 14
24590-PTF-MV-PWD-00010002

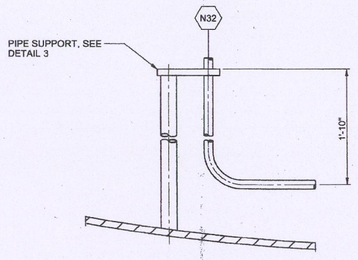

DETAIL 13
24590-PTF-MV-PWD-00010002

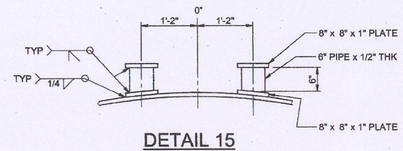

DETAIL 15
24590-PTF-MV-PWD-00010002
PAIR OF 2 @ 3 W/ C.L. ELEVATIONS OF:
"Z" = 139.5"
"Z" = 1:3"
"Z" = 294"

DRAWINGS INDEX

DWG NO	REV	TITLE
24590-PTF-MV-PWD-00010001	0	EQUIPMENT ASSEMBLY PLANT WASH VESSEL PWD-VSL-00044 SHEET 1 OF 3
24590-PTF-MV-PWD-00010002	0	SECTIONS & DETAILS PLANT WASH VESSEL PWD-VSL-00044 SHEET 2 OF 3
24590-PTF-MV-PWD-00010003	0	DETAILS PLANT WASH VESSEL PWD-VSL-00044 SHEET 3 OF 3

PLEASE NOTE THAT SOURCE, SPECIAL NUCLEAR AND BYPRODUCT MATERIALS, AS DEFINED IN THE ATOMIC ENERGY ACT OF 1954 (AEA), ARE REGULATED AT THE U.S. DEPARTMENT OF ENERGY (DOE) FACILITIES EXCLUSIVELY BY DOE ACTING PURSUANT TO ITS AEA AUTHORITY. DOE ASSERTS, THAT PURSUANT TO THE AEA, IT HAS SOLE AND EXCLUSIVE RESPONSIBILITY AND AUTHORITY TO REGULATE SOURCE, SPECIAL NUCLEAR, AND BYPRODUCT MATERIALS AT DOE-OWNED NUCLEAR FACILITIES. INFORMATION CONTAINED HEREIN ON RADIONUCLIDES IS PROVIDED FOR PROCESS DESCRIPTION PURPOSES ONLY.

Please note that source, special nuclear, and byproduct materials, as defined in the Atomic Energy Act of 1954 (AEA) are regulated at the U.S. Department of Energy (DOE) facilities exclusively by DOE acting pursuant to its AEA authority. DOE asserts that, pursuant to AEA, it has sole and exclusive responsibility and authority to regulate source, special nuclear, and byproduct materials at DOE-owned nuclear facilities. Information contained herein on radionuclides is provided for process description purposes only.

REVISION HISTORY

REV	DESCRIPTION	ORG	CHKD	RVWD	APVD	DATE
0	ADDED DETAILS DRAWING					5/25/10

ISSUED BY RPP-WTP PDC

PROJECT No.	24590
SITE	HANFORD
AREA	200E
BUILDING No.	10

ISSUE STAMP

	BY	DATE
ORIGINATOR		05-May-10
CHECKER		5/25/10
APPROVER		5/25/10
REVIEWER		5/25/10

CONTENT APPLICABLE TO ALARA? [X] YES [ ] NO
ADR NO. 24590-WTP-ACR-03-008 REV: 2
E&HS SCREENING REQUIRED [X] YES [ ] NO E&HS INITIAL IF YES

RIVER PROTECTION PROJECT
WASTE TREATMENT PLANT
2435 STEVENS CENTER PLACE
RICHLAND, WA 99354

CONTRACT No: DE-AC27-01RV14136

DETAILS
PLANT WASH VESSEL
PWD-VSL-00044
SHEET 3 OF 3

SCALE: NONE

24590-PTF-MV-PWD-00010003

REV 0

SCREENING IS REQUIRED FOR DRAWING TYPES IDENTIFIED IN 24590-WTP-GPP-SREG-002

"E" SIZE - 44x34
COMPUTER GENERATED - MANUAL DESIGN CHANGES NOT PERMITTED

2527221-1-18

05/21/2010 3:27:33 PM