0021202

Original

JAN 29 1992 Sta. 21 (20)

ENGINEERING DATA TRANSMITTAL

(20) 1/29/92 jb

Page 1 of 1

1. EDT 156785

2. To: (Receiving Organization) Distribution	3. From: (Originating Organization) Environmental Safety	4. Related EDT No.: N/A
5. Proj./Prog./Dept./Div.: Environmental Safety	6. Cog. Engr.: G. S. Hunacek, Jr.	7. Purchase Order No.: N/A
8. Originator Remarks: This EDT transmits document WHC-SD-NR-ES-013, REV. 0 for review and approval for external release. Review comments must be incorporated before January 10, 1992 to meet January 31, 1992 submittal to EPA and Ecology.		9. Equip./Component No.: N/A
		10. System/Bldg./Facility: N/A
11. Receiver Remarks: Submit comments to G. S. Hunacek, Jr. 373-1673, MSIN X0-41		12. Major Assm. Dwg. No.: N/A
		13. Permit/Permit Application No.: N/A
		14. Required Response Date: January 10, 1992

15. DATA TRANSMITTED

(A) Item No.	(B) Document/Drawing No.	(C) Sheet No.	(D) Rev. No.	(E) Title or Description of Data Transmitted	(F) Impact Level	(G) Reason for Transmittal	(H) Originator Disposition	(I) Receiver Disposition
1	WHC-SD-NR-ES-013		0	N Reactor Effluent Treatment Technology	3	1,2		

16. KEY

Impact Level (F)	Reason for Transmittal (G)	Disposition (H) & (I)
1, 2, 3, or 4 (see MRP 5.43)	1. Approval 2. Release 3. Information 4. Review 5. Post-Review 6. Dist. (Receipt Acknow. Required)	1. Approved 2. Approved w/comment 3. Disapproved w/comment 4. Reviewed no/comment 5. Reviewed w/comment 6. Receipt acknowledged

17. SIGNATURE/DISTRIBUTION (See Impact Level for required signatures)

(G) Reason	(H) Disp.	(J) Name	(K) Signature	(L) Date	(M) MSIN	(J) Name	(K) Signature	(L) Date	(M) MSIN	(G) Reason	(H) Disp.
1		Cog.Eng. G. S. Hunacek			X0-41						
1		Cog. Mgr. D. J. Watson			X0-41						
1		QA J. C. Plastino		1/4/92	X1-80						
1		Safety									
1		Env. K. A. Gano	for KAG		X0-21						
1		J. P. Schmidt		1-7-92	X0-41						
1		T. M. Gronewald		1/6/92	X5-58						

JAN 1992 RECEIVED EDMC

18.	19.	20.	21. DOE APPROVAL (if required)
G. S. Hunacek, Jr. 1/3/92	D. J. Watson 1/7/92	J. P. Schmidt 1-7-92	Ltr. No. [] Approved [] Approved w/comments [] Disapproved w/comments
Signature of EDT Originator Date	Authorized Representative for Receiving Organization Date	Cognizant/Project Engineer's Manager Date	

ED-7400-172-2 (07/89) (EF) GEF097

DISTRIBUTION

Number of Copies

ONSITE

8	U.S. Department of Energy Richland Field Office	
	A. V. Beard	A6-55
	S. S. Clark	G2-06
	C. B. Loftis	X0-35
	R. P. Saget	E3-50
	J. J. Sutey	A5-90
	D. W. Templeton	R2-62
	H. R. Trumble	A6-55
	J. E. Mecca	A6-55
44	Westinghouse Hanford Company	
	L. E. Borneman	H4-57
	G. D. Carpenter	B2-16
	C. Entrop	H4-17
	J. C. Fulton	R3-56
	R. G. Gant	L6-18
	T. H. Gronewald	X5-58
	K. A. Hadley	R3-56
	G. S. Hunacek, Jr.	X0-41
	D. E. Kelley	R1-48
	R. E. Lerch	B2-35
	P. J. Mackey	B3-15
	H. E. McGuire	B3-63
	D. M. Nguyen	R1-48
	R. W. Oldham	H4-57
	M. A. Payne	R3-50
	R. J. Pyzel	X0-42
	W. G. Ruff	R3-50
	J. P. Schmidt	X0-41
	R. L. Sherman	X0-34
	S. A. Slinn	X5-06
	C. L. Volkman	X1-80
	D. J. Watson (10)	X0-41
	B. D. Williamson	B3-15
	T. B. Veneziano	B2-35
	EDMC (5)	H4-22
	PSC (2)	A3-84
	HLD File/LB	
	Central Files (2)	L8-04
	Information Release Administration	H4-17

SUPPORTING DOCUMENT

1. Total Pages 113

2. Title
N-Reactor Effluent Treatment Technology

3. Number
WHC-SD-NR-ES-013

4. Rev No.
0

5. Key Words
N-Reactor, 1325N, NPDES, BAT, treatment

6. Author
Name: G. S. Hunacek, Jr.
Signature
Organization/Charge Code 11120/KN311

APPROVED FOR PUBLIC RELEASE 1/28/92 M Gonzales

7. Abstract

EBASCO Services Incorporated (EBASCO) was requested by WHC to identify two alternative treatment systems, which would allow the N Reactor effluent going to the 1325-N LWDF to be treated and routed to the Columbia River following Best Available Technology (BAT). The selected alternatives were considered the best of four treatment options based on a set of evaluation criteria. These criteria included the effectiveness of the treatment system, the cost of the treatment, and implementation constraints.

WHC (1991) N-Reactor Effluent Treatment Technology, WHC-SD-NR-ES-013, REV. 0
Author, EBASCO

8. PURPOSE AND USE OF DOCUMENT - This document was prepared for use within the U.S. Department of Energy and its contractors. It is to be used only to perform, direct, or integrate work under U.S. Department of Energy contracts. This document is not approved for public release until reviewed.

PATENT STATUS - This document copy, since it is transmitted in advance of patent clearance, is made available in confidence solely for use in performance of work under contracts with the U.S. Department of Energy. This document is not to be published nor its contents otherwise disseminated or used for purposes other than specified above before patent approval for such release or use has been secured, upon request, from the Patent Counsel, U.S. Department of Energy Field Office, Richland, WA.

DISCLAIMER - This report was prepared as an account of work sponsored by an agency of the United States Government. Neither the United States Government nor any agency thereof, nor any of their employees, nor any of their contractors, subcontractors or their employees, makes any warranty, express or implied, or assumes any legal liability or responsibility for the accuracy, completeness, or any third party's use or the results of such use of any information, apparatus, product, or process disclosed, or represents that its use would not infringe privately owned rights. Reference herein to any specific commercial product, process, or service by trade name, trademark, manufacturer, or otherwise, does not necessarily constitute or imply its endorsement, recommendation, or favoring by the United States Government or any agency thereof or its contractors or subcontractors. The views and opinions of authors expressed herein do not necessarily state or reflect those of the United States Government or any agency thereof.

9. Impact Level 3

10. RELEASE STAMP

OFFICIAL RELEASE BY WHC (20)
DATE JAN 29 1992
Sta. 21

INFORMATION RELEASE REQUEST

References: WHC-CM-3-4

COMPLETE FOR ALL TYPES OF RELEASE

Purpose

- [] Speech or Presentation
  - [] Full Paper
  - [] Summary
  - [] Abstract
  - [] Visual Aid
- [] Speakers Bureau
- [] Poster Session
- [] Videotape

(Check only one suffix)

- [] Reference
- [x] Technical Report
- [] Thesis or Dissertation
- [] Manual
- [] Brochure/Flier
- [] Software/Database
- [] Controlled Database
- [] Other

New ID Number: WHC-SD-NR-ES-013, REV. 0

Existing ID Number (include revision, volume, etc.): N/A

If previously cleared, list ID number: N/A

Date Release Required: January 21, 1992

Title: N-Reactor Effluent Treatment Technology

Unclassified Category: UC-

Impact Level: 3

COMPLETE FOR SPEECH OR PRESENTATION

Title of Journal: N/A

Group or Society Sponsoring: N/A

Date(s) of Conference or Meeting: N/A

City/State: N/A

Will proceedings be published? [] Yes [X] No

Will material be handed out? [] Yes [X] No

Title of Conference or Meeting: N/A

CHECKLIST FOR SIGNATORIES

Review Required per WHC-CM-3-4	Yes	No	Reviewer Name (printed)	Signature	Date
Classification/Unclassified Controlled Nuclear Information	[X]	[]	RJ Page	[signature]	1-3-92
Patent - General Counsel	[X]	[]	SW Berglin	[signature]	1/8/92
Legal - General Counsel	[X]	[]	SW Berglin / BD Williamson	[signature] / [signature]	1/8/92
Applied Technology/Export Controlled Information or International Program	[]	[X]	JP Schmidt	[signature]	1-7-92
WHC Program	[X]	[]	DJ Watson	[signature]	1-23-92
Communications	[]	[X]			
DOE-RL Program	[X]	[]	Suzanne S Clark	[signature]	1-30-
Publication Services	[X]	[]	Charleen Entrop	[signature]	1/29/91
Other Program	[]	[X]			
References Available to Intended Audience	[X]	[]	Charleen Entrop	[signature]	1/29/91
Transmit to DOE-HQ/Office of Scientific and Technical Information	[]	[X]			

Information conforms to all applicable requirements. The above information is certified to be correct.

Author/Requestor (Printed/Signature) Date

G. S. Hunacek, Jr. [signature] 1/3/92

Responsible Manager (Printed/Signature) Date

J. P. Schmidt [signature] 1/16/92

D. J. Watson [signature] 1/6/92

Intended Audience

[] Internal [] Sponsor [X] External

INFORMATION RELEASE ADMINISTRATION APPROVAL STAMP

Stamp is required before release. Release is contingent upon resolution of mandatory comments.

APPROVED FOR RELEASE — OFFICIAL DOCUMENT — 1/29/92

Date Received 1/9/92 MG

BD-7600-062 (4/90) (EF) WEF074
Information Release Request

Part 1

WHC-SD-NR-ES-013, REV. 0

ID Number

Lead Author	Phone	MSIN	Other Author(s) or Requestor
EBASCO ENVIRONMENTAL	3-1673	X0-41	G. S. Hunacek, Jr.
Project or Program	**Lead Org Code**		**Sponsor Agency (DOE, DOT, NRC, USGS, etc.)**
BAT 1325-N	11120		DOE
Editor	**Phone**	**MSIN**	**DOE/HQ Program (DP, EH, EM, NE, etc.)**
Chan Enthip	6-8742	H4-17	DP

Mandatory Comments*	Reviewer Name & Signature	Date	Resolution	Date
① Marked are items for correction	[illegible]	1/10/92	[illegible]	1/15/92
See yellow tagged pages.				

*Only mandatory comments are to be documented. All other comments should be made on a copy of the information submitted for review and returned to the author.

Legends/Notices/Markings

	Affix Yes	Affix No	Remove Yes	Remove No		Affix Yes	Affix No	Remove Yes	Remove No
Applied Technology	[ ]	[ ]	[ ]	[ ]	Programmatic Notice	[ ]	[ ]	[ ]	[ ]
Business-Sensitive Information	[ ]	[ ]	[ ]	[ ]	Proprietary Information	[ ]	[ ]	[ ]	[ ]
Computer Software Notice	[ ]	[ ]	[ ]	[ ]	Purpose and Use	[ ]	[ ]	[X]	[ ]
Copyright License Notice	[ ]	[ ]	[ ]	[ ]	Thesis/Dissertation	[ ]	[ ]	[ ]	[ ]
Export Controlled Information	[ ]	[ ]	[ ]	[ ]	Trademark Disclaimer	[ ]	[ ]	[ ]	[ ]
Legal Disclaimer	[X]	[ ]	[ ]	[X]	Unclassified Controlled Nuclear Information/Official Use Only	[ ]	[ ]	[ ]	[ ]
Limited Disclosure	[ ]	[ ]	[ ]	[ ]					
Patent Status	[ ]	[ ]	[X]	[ ]					
Predecisional Information	[ ]	[ ]	[ ]	[ ]					

Responsible Manager (Printed/Signature) 1/16/92

PREFACE

The N Reactor best available technology/all known available reasonable methods of prevention, control, and treatment evaluation (BAT/AKART) is the current technology evaluation. This BAT/AKART evaluation was based on the same water quality data as was used for the N Reactor Stream-Specific Report, WHC-EP-0342, Addendum 3 (WHC 1990a). Additional sampling and analysis as scoped in the N Reactor Sampling/Analysis Plan (SAP), WHC-SD-NR-PLN-008, Rev. 0, (Hunacek 1991) is planned to be conducted. Following the completion of the additional sampling and analyses, the BAT/AKART evaluation will be reviewed to confirm or revise the treatment technology for the BAT/AKART implementation plan that will be prepared for not only effluent flows from routine activities, but also those from draining liquid inventories.

In September 1991, DOE-HQ announced that N Reactor was no longer needed as a defense materials production contingency and that activities directed at the preservation of the reactor were to cease. Future activities at N Reactor were to proceed leading to the ultimate decommissioning of the reactor. This change in plant status postdates the discussions and agreements in regard to the 1325-N Liquid Waste Disposal Facility. The liquid effluent stream now and in the immediate future will consist of two components: (1) that derived from routine activities and (2) that derived from the draining of liquid inventories.

The N Reactor Effluent Plan (Appendix A) has been prepared to describe the process for BAT/AKART selection in order to cease discharge of all effluents to the 1325-N Liquid Waste Disposal Facility. How BAT/AKART will be implemented will consider such factors as utilization of existing Hanford facilities, utilization of future effluent treatment capability, permitting requirements, schedule and schedule risks, economics, etc. The critical activity in this plan is obtaining additional water quality analyses.

A plan for rerouting the 1325-N effluent to surface water following BAT/AKART is contained in Appendix B.

This page intentionally left blank.

EXECUTIVE SUMMARY

The U.S. Department of Energy (DOE) plans to cease discharges to the 1325-N Liquid Waste Disposal Facility (LWDF) in the 100-N Area of the Hanford Site as required to meet the *Hanford Federal Facility Agreement and Consent Order*[1] (Tri-Party Agreement) Milestone M-17-15. Several actions are required to satisfy this milestone, including "Submit the N Reactor effluent Best Available Technology (BAT)/All Known, Available and Reasonable Methods of Control, Prevention and Treatment (AKART) evaluation to the Environmental Protection Agency (EPA) and Washington State Department of Ecology (Ecology)" by January 1992.

Two alternative treatment processes were identified that satisfy the BAT/AKART standard. The two alternatives selected include treatment for suspended solids using a backflushable microfilter, and removal of dissolved solids using a mechanical vapor recompression evaporator followed by ion exchange treatment of the overhead from the evaporator. The two alternatives differ in the treatment used to remove organic compounds. If the stream contains little to no organics, granulated activated carbon (GAC) adsorption is recommended. If higher levels of organics are encountered, ultraviolet light (UV)-catalyzed oxidation may be needed to achieve required treatment levels. The treatment system has been sized to treat approximately 3.97 million liters (1.05 million gallons) of effluent per year, at a maximum

---

[1]Ecology, EPA, and DOE, 1990, *Hanford Federal Facility Agreement and Consent Order*, 2 Vols, as amended, Washington State Department of Ecology, U.S. Environmental Protection Agency, and U.S. Department of Energy, Olympia, Washington.

flow rate of approximately 94.6 liters per minute (25 gallons per minute). The maximum flow rate has been set based upon the desired treatment rate for eventual decommissioning and clean-out of the 105-N Spent Fuel Basin.

The selected alternatives were considered the best of four treatment options based on a set of evaluation criteria. These criteria included the effectiveness of the treatment system, the cost of treatment, and implementation constraints. Implementation constraints included schedule for completion, worker and public exposure to hazardous materials, and treatment system reliability. The selected alternatives meet treatment goals for all dissolved and suspended solids, and most radionuclides. The UV/Oxidation alternative met all treatment goals for organic removal with the assumed stream composition. No treatment system evaluated was effective in removing tritium from the wastewater; cost-effective demonstrated wastewater treatment technologies for tritium do not exist.

Detailed, current effluent characterization data for discharges to the 1325-N LWDF were not available; data from 1990 samples[1] may no longer be representative of the actual stream composition, as significant flow reductions have occurred since these samples were collected. Therefore, a conservative stream composition was developed using the 1990 data, with key constituents of concern assumed to be present at concentrations an order of magnitude above those observed in 1990. This increase was based upon the relative concentrations of certain radionuclides in samples of the N Reactor effluent collected in 1990 and 1991.

---

[1]WHC, 1990, *N Reactor Effluent Stream Specific Report*, WHC-EP-0342, Addendum 3, Westinghouse Hanford Company, Richland, Washington.

The most cost-effective management strategy for the relatively small volumes of secondary waste generated by the treatment process appears to be treatment and disposal by means of the Hanford Site 200 Area double-shell tank system. Secondary wastes are assumed to be mixed (radioactive and dangerous) wastes based upon the concentration achieved by the treatment train and the estimated influent concentrations of dangerous waste constituents.

Two disposal options for treated effluent were identified. Wastewater could be discharged to the Columbia River under a National Pollutant Discharge Elimination System (NPDES) permit. Treated effluent could also be disposed of through total onsite evaporation using existing N Reactor facilities. Permits through state and local air pollution control programs would be required for this option; preliminary screening calculations indicate that airborne tritium releases would be within air pollution control regulation guidelines.

The rough order-of-magnitude installed equipment costs for the selected treatment alternatives range from $4.35 million (for the alternative that includes GAC treatment) to $5.76 million (for the alternative that includes UV/Oxidation). Annual operating costs range from approximately $544,000 (UV/Oxidation) to about $583,000 (GAC). Equivalent uniform annual costs (EUAC), which include annual operating costs and capital recovery, range from $1.2 million (GAC) to $1.36 million (UV/Oxidation).

CONTENTS

1.0 INTRODUCTION 1-1
1.1 OBJECTIVES 1-1
1.2 FACILITY DESCRIPTION 1-3
1.2.1 105-N Fuel Basin 1-3
1.2.2 105-N Floor Drains and Decontamination Stations . . . 1-3
1.2.3 Emergency Dump Basin 1-5
1.2.4 109-N Nuclear Service Sumps 1-5

2.0 EFFLUENT CHARACTERISTICS 2-1

3.0 GUIDANCE FOR SELECTING TREATMENT TECHNOLOGY 3-1
3.1 OVERVIEW OF THE BAT DETERMINATION PROCEDURE 3-1
3.1.1 Step 1: Effluent Characterization 3-2
3.1.2 Step 2: Effluent Guidelines Method 3-2
3.1.3 Step 3: Technology Transfer Method 3-2
3.1.4 Step 4: Treatability Studies Method 3-4
3.1.5 Step 5: Generic Treatment Systems Method 3-4
3.2 APPLICATION OF THE BAT PROCEDURE TO THE N REACTOR WASTEWATER 3-4
3.2.1 Step 1: N Reactor Effluent Characterization 3-4
3.2.2 Step 2: Effluent Guidelines Method 3-5
3.2.3 Step 3: Technology Transfer Method 3-15
3.2.4 Step 4: Treatability Studies Method 3-16
3.2.5 Step 5: Generic Treatment Systems Method 3-16

4.0 TREATMENT ALTERNATIVES 4-1
4.1 SCREENING OF EFFLUENT TREATMENT TECHNOLOGIES 4-1
4.2 NO ACTION 4-2
4.3 SOURCE TREATMENTS 4-2
4.3.1 Source Control 4-2
4.3.2 Zero Discharge 4-4
4.4 END-OF-PIPE TREATMENTS 4-5
4.4.1 Suspended Solids Removal 4-5
4.4.2 Organics Removal 4-6
4.4.3 Dissolved Solids Removal 4-8
4.4.4 Radionuclides 4-12
4.5 SCREENING SUMMARY 4-12
4.6 CANDIDATE TREATMENT SYSTEMS 4-14
4.6.1 Alternative 1 4-14
4.6.2 Alternative 2 4-14
4.6.3 Alternative 3 4-17
4.6.4 Alternative 4 4-17
4.6.5 Alternative 5 4-17
4.7 CANDIDATE TREATED EFFLUENT DISPOSAL METHODS 4-17
4.7.1 Discharge to the Columbia River 4-17
4.7.2 Onsite Evaporation 4-21
4.8 SECONDARY WASTE TREATMENT OPTIONS 4-21
4.8.1 Onsite Stabilization 4-21
4.8.2 Liquid Secondary Waste Disposal 4-21

CONTENTS (cont)

5.0 DESCRIPTION OF CANDIDATE TREATMENT AND DISPOSAL SYSTEMS 5-1
5.1 ALTERNATIVE 1 5-1
5.1.1 Process Description 5-1
5.1.2 Effectiveness 5-3
5.1.3 Implementability 5-7
5.1.4 Cost 5-9
5.2 ALTERNATIVE 2 5-12
5.2.1 Process Description 5-12
5.2.2 Effectiveness 5-14
5.2.3 Implementability 5-14
5.2.4 Costs 5-19
5.3 ALTERNATIVE 3 5-19
5.3.1 Process Description 5-19
5.3.2 Effectiveness 5-20
5.3.3 Implementability 5-20
5.3.4 Costs 5-20
5.4 ALTERNATIVE 4 5-25
5.4.1 Process Description 5-25
5.4.2 Effectiveness 5-25
5.4.3 Implementability 5-25
5.4.4 Costs 5-30
5.5 ALTERNATIVE 5 5-30
5.5.1 Process Description 5-30
5.5.2 Effectiveness 5-31
5.5.3 Implementability 5-31
5.5.4 Costs 5-31
5.6 COLUMBIA RIVER DISPOSAL 5-31
5.6.1 Process Description 5-31
5.6.2 Effectiveness 5-36
5.6.3 Implementability 5-36
5.6.4 Cost 5-36
5.7 ONSITE EVAPORATION DISPOSAL ALTERNATIVE 5-36
5.7.1 Process Description 5-36
5.7.2 Effectiveness 5-37
5.7.3 Implementability 5-37
5.7.4 Cost 5-37

6.0 EVALUATION OF THE CANDIDATE TREATMENT SYSTEMS 6-1
6.1 EFFECTIVENESS 6-1
6.2 IMPLEMENTABILITY 6-1
6.3 COST 6-3

7.0 SELECTED TREATMENT ALTERNATIVES 7-1
7.1 INTRODUCTION 7-1
7.2 SELECTED ALTERNATIVES 7-1
7.2.1 Key Assumptions 7-1
7.2.2 Preliminary Design Information 7-2
7.2.3 Ability to Meet Comparative Effluent Levels 7-4
7.2.4 Secondary Waste Quality 7-4

CONTENTS (cont)

8.0 SELECTION OF SECONDARY WASTE TREATMENT AND DISPOSAL OPTIONS 8-1

9.0 REFERENCES 9-1

APPENDICES

A N REACTOR EFFLUENT BAT IMPLEMENTATION PLAN . . . . . A-i

B PLAN FOR REROUTING 1325-N EFFLUENT TO SURFACE WATER FOLLOWING BAT/AKART . . . . . B-i

LIST OF FIGURES

1-1 N Reactor Effluent Flow Schematic 1-4

3-1 Best Available Technology (BAT) Determination Process 3-3

3-2 Procedures for Selecting BAT Using the Generic Treatment Systems Method 3-17

4-1 Diagram of Alternative 1 Process Train 4-15

4-2 Diagram of Alternative 2 Process Train 4-16

4-3 Diagram of Alternative 3 Process Train 4-18

4-4 Diagram of Alternative 4 Process Train 4-19

4-5 Diagram of Alternative 5 Process Train 4-20

LIST OF TABLES

2-1 Design Bases for Non-Radioactive and Radiochemical Constituents 2-2

3-1 N Reactor Treatment System Relevant Regulatory Criteria and Required System Performance 3-13

3-2 Toxicity Weighting Factors 3-18

4-1 Wastewater Treatment Technologies 4-3

4-2 Results of Screening N Reactor Wastewater Treatment Technologies 4-13

5-1 Predicted Effluent Quality for Alternative 1 5-4

5-2 Cost Estimate for Alternative 1 5-10

5-3 Predicted Effluent Quality for Alternative 2 5-15

5-4 Cost Estimate for Alternative 2 5-18

5-5 Predicted Effluent Quality for Alternative 3 5-21

5-6 Cost Estimate for Alternative 3 5-24

5-7 Predicted Effluent Quality for Alternative 4 5-26

5-8 Cost Estimate for Alternative 4 5-29

5-9 Predicted Effluent Quality for Alternative 5 5-32

5-10 Cost Estimate for Alternative 5 5-35

6-1 Weighting Factors and Scores for Each Alternative 6-2

6-2 Cost Data for Alternatives 1-5 6-3

6-3 N Reactor BAT Study Cost Effectiveness of N Reactor Treatment Alternatives 6-4

8-1 Costs - Alternative 4A 8-2

8-2 Costs - ALternative 4B 8-3

ACRONYMS

AEA	*Atomic Energy Act of 1954*
AKART	all known, available and reasonable methods of prevention, control, and treatment
ALARA	As Low as Reasonably Achievable (radiation exposure)
ANS	American Nuclear Society
ANSI	American National Standards Institute
ARL	Alden Research Laboratory
BAT	best available technology (economically achievable)
BMP	best management practices
BPJ	best professional judgment
CFR	Code of Federal Regulations
CWA	*Clean Water Act of 1977*
DCG	derived concentration guidelines
DF	decontamination factor
DOE	U.S. Department of Energy
DST	double-shell tank
Ecology	Washington State Department of Ecology
EPA	U.S. Environmental Protection Agency
EUAC	equivalent uniform annualized cost
FY	fiscal year
GAC	granulated activated carbon
HEPA	high efficiency particulate air (filter)
HH	halogenated hydrocarbon
IX	ion exchange
LDR	land disposal restrictions
LERF	Liquid Effluent Retention Facility
LETF	Liquid Effluent Treatment Facility
LOEL	lowest observed effects levels
MCL	maximum contaminant levels
MCLG	maximum contaminant level goals
MVR	mechanical vapor recompression
NPDES	National Pollutant Discharge Elimination System
NRC	U.S. Nuclear Regulatory Commission
O & M	operations and maintenance
PAC	powdered activated carbon
PAH	polycyclic aromatic hydrocarbon
PC	purchased cost
PCB	polychlorinated biphenyls
RCRA	*Resource Conservation and Recovery Act of 1976*
RCW	Revised Code of Washington
RO	reverse osmosis
RREL	Risk Reduction Engineering Laboratory
SLM	supported liquid membrane
SMCL	secondary maximum contaminant levels
SWDP	State Waste Discharge Permit
TC	toxicity characteristic

TOC	total organic carbon
Tri-Party Agreement	*Hanford Federal Facility Agreement and Consent Order*
TWF	toxic weighting factor
UNC	United Nuclear Corporation (previously UNI)
UNI	United Nuclear Incorporated
UV	ultraviolet (light)
Westinghouse Hanford	Westinghouse Hanford Company
WPCA	Washington State *Coastal Waters Protection Act of 1971*
WQC	Water Quality Criteria

This page intentionally left blank.

N REACTOR EFFLUENT TREATMENT TECHNOLOGY STUDY

1.0 INTRODUCTION

This document presents the results of an engineering study that identified two alternative treatment processes for effluent discharged into the 1325-N Liquid Waste Disposal Facility (LWDF) at the Hanford Site N Reactor. These treatment processes represent the best available treatment economically achievable (BAT) for the N Reactor effluent under the assumed conditions.

This report is organized into the following eight sections.

Section 1 describes the objectives of this document. A description of the sources contributing to the N Reactor effluent is also provided in Section 1.

Section 2 details the characteristics and chemical composition of the N Reactor effluent.

Section 3 outlines the process used for selecting BAT for the N Reactor effluent. Section 3 then describes how the process was applied to determine BAT.

Section 4 develops alternative effluent treatment processes for evaluation for potential use at the N Reactor. Potential treated effluent and secondary waste disposal methods are also identified.

Section 5 discusses in detail each of the alternative effluent treatment processes and treated effluent disposal methods. Predicted effluent quality and process costs are provided for each effluent treatment alternative.

Section 6 evaluates each alternative effluent treatment process in terms of effectiveness, implementability, and cost. Two recommended alternatives are identified.

Section 7 provides further detail on the two recommended alternatives. Key design assumptions are highlighted, and preliminary equipment design information discussed.

Section 8 evaluates two secondary waste treatment options based upon costs. A preferred method is identified.

1.1 OBJECTIVES

For more than 25 years, effluent containing small concentrations of low-level radionuclides and stable chemical compounds have been treated and disposed of at the N Reactor by infiltration into the local soil column. Recent U.S. Department of Energy (DOE) policy revisions mandate that the use of soil columns to treat and retain suspended or dissolved radionuclides from liquid waste streams be discontinued at the earliest practical date and

replaced by systems and operating practices designed to treat and minimize wastewater streams. These policy revisions are being implemented through DOE Orders that are based on federal environmental regulations and/or interpretations.

The 1325-N Liquid Waste Disposal Facility (LWDF) is currently configured to receive effluent from several sources at the Hanford Site N Reactor. This effluent is discharged into a 73 m x 76 m x 0.6 m (240 ft x 250 ft x 2 ft) basin, which overflows to a 910 m (3,000 ft) long trench.

In May, 1989, an agreement reached between DOE, the U.S. Environmental Protection Agency (EPA) and the Washington Department of Ecology (Ecology) prioritized environmental remediation activities at the Hanford Site (Ecology et al. 1989). This agreement (known as the Tri-Party Agreement) was amended October 1991 to include Milestone M-17-15, "Cease discharge to the 1325-N LWDF system," by June 1995 (Ecology et al. 1990).

Actions regarding the selection, construction, and operation of a treatment system for the N Reactor effluent may require regulatory approval and/or permits. One requirement for gaining the necessary approval/permit for discharging treated effluent to surface water or groundwater under the *Clean Water Act of 1977* (CWA) or the Washington State Waste Discharge Permit (SWDP) program is to demonstrate to the regulatory agencies that the best available technology will be utilized to prevent the degradation of surface water and groundwater by effluent discharges. The CWA and SWDP program provide guidance on the regulatory meaning of best technology as it applies to wastewater treatment systems.

The best technology requirements of the CWA will apply if the treated waters are discharged to the Columbia River. If so, a National Pollutant Discharge Elimination System (NPDES) permit would require effluents to be treated by BAT. If the treated effluent is to be discharged to the soil column, the action must satisfy the substantive requirements of the SWDP program. The treatment technology to be employed under the SWDP program requires selection based on consideration of all known, available and reasonable methods of prevention, control and treatment (AKART). Ecology recently has agreed that, for the purposes of evaluating wastewater discharges at the Hanford Site, the requirements under BAT and AKART are equivalent (Ecology 1991a).

For effluent streams with a low total flow volume, evaporation rather than discharge to surface water or groundwater is a potentially viable option for disposing of treated effluents. Evaporation systems may require permitting under the provisions of state and federal clean air regulations.

To address these requirements, commitments, and environmental protection policies, this engineering study establishes the appropriate level of treatment for the N Reactor effluent stream using the Hanford Site BAT evaluation process (WHC 1988). As a part of this process, five alternative treatment systems were developed and evaluated using established criteria; two alternative treatment systems were identified that will meet the AKART/BAT standard.

1.2 FACILITY DESCRIPTION

The N Reactor is located in the 100-N Area along the Columbia River approximately 29 miles north of Richland, Washington. From 1963 to 1987 it was operated by DOE and its contractors to produce special nuclear materials. The N Reactor currently is in dry lay-up configuration and shutdown activities have been started as a prerequisite to decommissioning.

Several liquid effluent streams were produced by the N Reactor during its operations. A portion of these effluent streams, including effluent from reactor cooling systems and the spent fuel basin, were routed to the 1325-N LWDF. During reactor operations, as much as 6,050 L/min (1,600 gpm) of effluent flowed to the 1325-N LWDF from more than 20 major process sources.

When the reactor was placed into dry lay-up status in 1990, the majority of the discharges to the 1325-N LWDF ceased. Additionally, source controls implemented before the shutdown of the reactor have reduced the volumes of effluent routed to the 1325-N LWDF. Currently, less than 7.6 L/min (2 gpm) of wastewater are released to the 1325-N LWDF from the sources described below.

1.2.1 105-N Fuel Basin

Effluent from the 105-N Fuel Basin currently is discharged to the 1325-N LWDF*. Effluent overflows from the fuel basin flows to the 1325-N LWDF by means of the 105-N Lift Station and the 1301-N Weir Box (Figure 1-1). Currently, no fuel is stored in the 105-N Fuel Basin; however, a layer of sludge material remaining at the bottom of the basin is a potential source of radionuclides and other constituents of concern in the N Reactor effluent. Demineralized water periodically is added to the 105-N Fuel Basin to make up for water losses through evaporation. This water provides shielding from the radioactive sludge and hardware at the bottom of the basin.

It is planned that the 105-N Fuel Basin and all other N Reactor liquid inventories be drained by 1999. When the fuel basin is drained, approximately 3.79×10^6 L (1×10^6 gal) of radioactive effluent must be treated and disposed of. During this phase of reactor shutdown, a target effluent treatment rate of approximately 94.6 L/min (25 gpm) has been identified.

1.2.2 105-N Floor Drains and Decontamination Stations

Floor drains within the 105-N reactor facility are routed to the 1325-N LWDF by means of the 105-N Lift Station and 1301-N Weir Box. The floor drains normally are dry; however, small amounts of water from leaks or decontamination activities periodically may be released from this source.

---

*Effluent from the 105-N Fuel Basin is generated by the addition of water during decontamination activities.

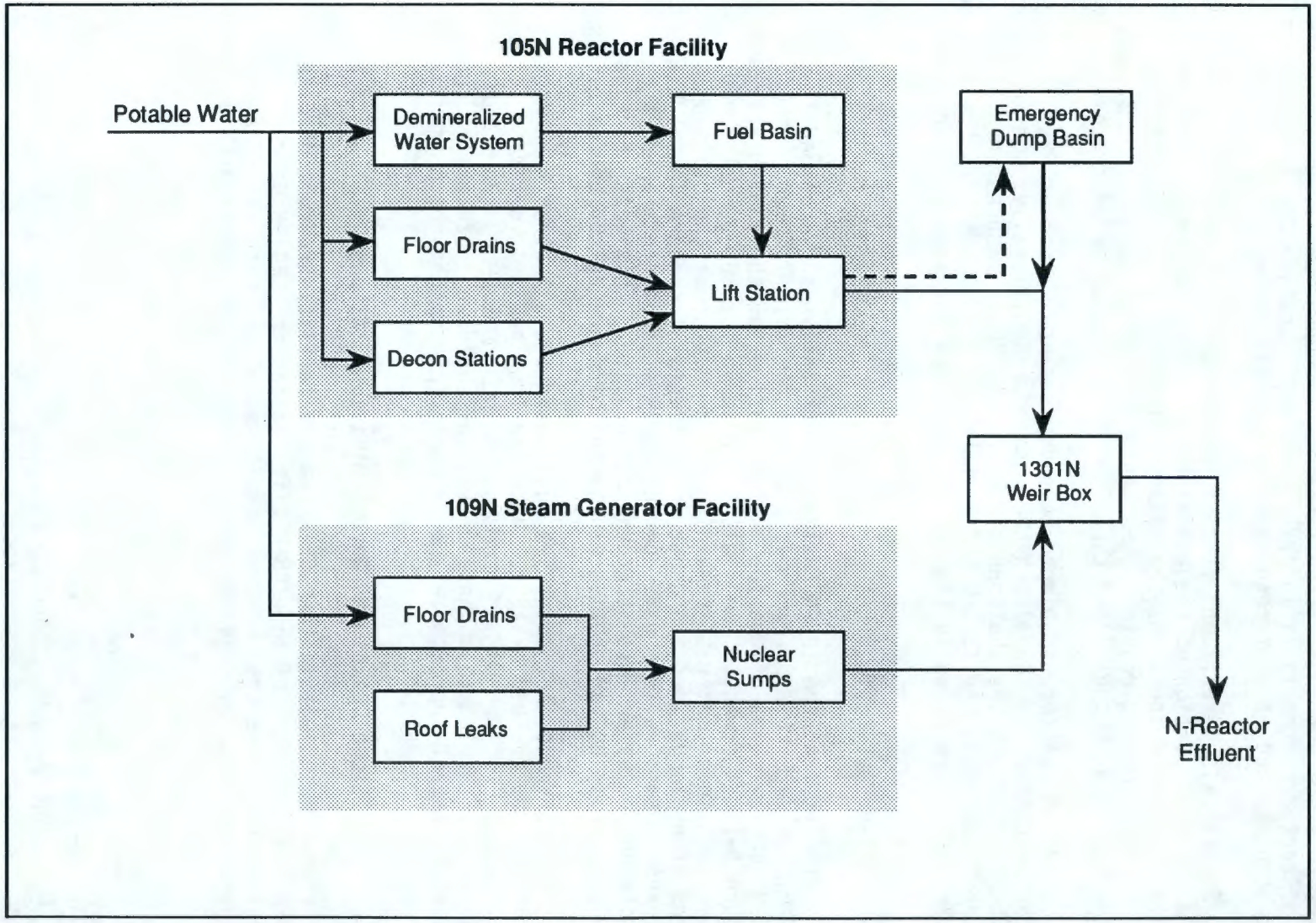

Figure 1-1. N Reactor Effluent Flow Schematic.

1.2.3 Emergency Dump Basin

Effluent flows through the 105-N Lift Station can be routed to the Emergency Dump Basin when process upsets occur. Effluent from the Emergency Dump Basin eventually is discharged to the 1325 LWDF by means of the 1301-N Weir Box. Sludge material in the Emergency Dump Basin is a potential source of radionuclides and other water pollutants in the N Reactor effluent. Flow contributions from the Emergency Dump Basin are variable and intermittent.

1.2.4 109-N Nuclear Service Sumps

Effluent from floor drains and roof leakage in the 109-N Steam Generator Facility is collected in the 109-N Nuclear Service Sump, and periodically released to the 1325-N LWDF by means of the 1301-N Weir Box. As with the 105-N floor drains, the effluent flow from this source is both small and intermittent.

This page intentionally left blank.

2.0 EFFLUENT CHARACTERISTICS

Adequate characterization of the N Reactor effluent is required to provide a basis for making treatment and disposal decisions and to support the approval and permitting process. Complete characterization of the effluent stream, however, is complicated by recent changes to the N Reactor effluent sources.

As a part of the Hanford Site effort to characterize all major effluent streams discharged to the soil column, the N Reactor effluent was extensively sampled between October 1989 and March 1990. Twenty-seven samples were collected and analyzed for volatile and semi-volatile organics, priority pollutant metals, and radionuclides (WHC 1990a). More recent data are available on the concentrations of certain radionuclides in the effluent stream (WHC 1991).

Since March 1990, the N Reactor has been placed into dry lay-up status; as a result, the flow to the 1325-N LWDF has decreased from approximately 1,135 L/min (300 gpm) to the present flow rate of less than 7.6 L/min (2 gpm). Routine effluent samples of the N Reactor effluent are currently collected and analyzed for radionuclides. Recent sample data indicate a 3- to 28-fold increase in the concentrations of radionuclides in the effluent versus those reported in 1990 (WHC 1991). It is believed that this increase in radionuclide concentration is primarily the result of decreased total effluent flow to the 1325-N LWDF. It also is believed that organic constituents identified in wastewater samples collected in 1990 may have been present because of contamination of the samples (WHC 1990a). Therefore, while the 1990 data provide the most comprehensive information available on the potential constituents present in the N Reactor effluent, they may not be representative of the characteristics of the current effluent stream. Additional characterization of the current N Reactor effluent is planned during fiscal year (FY) 1992.

For the purposes of this report, it is assumed that the N Reactor effluent has the composition outlined in Table 2-1. These concentrations are based upon the following assumptions.

- Tritium is present at the average concentrations reported between February 26, 1991 and June 26, 1991.

- Key radionuclides, organic, and inorganic constituents, for which there are established human health- or environmental protection-based water quality standards, may be present in concentrations up to ten times those reported in 1990. This order of magnitude concentration adjustment is based upon the relative difference in concentrations of radionuclides in samples collected in 1990 compared to those collected in 1991.

Table 2-1. Design Bases for Non-Radioactive and Radiochemical Constituents. (sheet 1 of 3)

Constituent	Assumed influent concentrations (ug/L)
Inorganics	
Ammonia	2,230.00
Arsenic*	130.80
Barium	41.40
Boron	83.40
Cadmium	20.00
Calcium	16,700.00
Chloride	12,500.00
Chromium (VI)*	60.80
Fluoride	204.00
Iron	2,960.00
Lead*	389.40
Magnesium	4,330.00
Manganese	86.90
Nitrate	438.00
Potassium	679.00
Selenium*	420.80
Silicon	2,040.00
Silver*	4.90
Sodium	2,030.00
Strontium	87.30
Sulfate	12,100.00
Uranium	2.84
Zinc	121.00

Table 2-1. Design Bases for Non-Radioactive and Radiochemical Constituents. (sheet 2 of 3)

Constituent	Assumed influent concentrations (ug/L)
Organics	
Acetone	173.00
1-butanol	36.20
2-butanone	291.00
BHT	13.50
Hydrazine	312.00
Hexone (MIBK)	103.00
Toluene	5.36
Trichloromethane	51.90
Total Organic Carbon	953.38
Total Carbon	11,900.00
Total Organic Halides	242.00
Other	
TDS	47,100.00
TSS	2,000.00
Temperature (deg C)	18.50
pH (Dimensionless)	7.36
Columbia River background	
Temperature (deg C)	16.40
pH (Dimensionless)	7.41
Hardness (mg/L)	60.00

*Concentrations based upon original lab data for EP Tox analyses.

Table 2-1. Design Bases for Non-Radioactive and Radiochemical Constituents. (sheet 3 of 3)

Radionuclides	Assumed influent concentrations	
	(pCi/L)	(ug/L)
Total Alpha*	4.99E+01	1.04E-04
Total Beta*	1.65E+06	5.94E-03
Am-241	7.03E+01	2.05E-05
Cm-242	4.93E-01	1.49E-10
Cm-244	8.92E-01	1.10E-08
Co-60	7.00E+03	6.19E-06
Cs-134	1.67E+03	1.28E-06
Cs-137*	4.71E+05	2.79E-03
C-14	4.24E+01	9.51E-06
H-3	5.54E+06	5.73E-04
Mn-54	6.04E+03	7.79E-07
Pb-210	2.97E+01	3.88E-07
Pu-238	1.09E+01	6.37E-07
Pu-239/240*	6.66E+01	1.39E-04
Radium*	3.30E-01	3.33E-07
Ru-106*	1.72E+04	2.57E-06
Sr-90*	1.76E+06	6.33E-03
U-234	1.60E+00	2.56E-04
U-235	2.17E-01	1.00E-01
U-238	1.13E+00	3.36E+00

*Radium is assumed to be Ra-226.

For Ru-106 calculations, the specific activity of Ru-106/Rh-106 is used.

For Sr-90 calculations, the specific activity of Sr-90/Y-90 is used.

For Cs-137 calculations, the specific activity of Cs-137/Ba-137 is used.

For Pu-239/240 calculations, 6% Pu-240 is assumed.

Total Alpha calculations use specific activity for Pu-239/240.

Total Beta calculations use specific activity for Sr-90.

- Total suspended solid levels and particle size distributions are similar to those reported in 1987 (UNC 1987b).

- All other constituents are present at the concentrations reported in 1990.

The assumed effluent composition provides a conservative basis for screening candidate wastewater treatment technologies and identifying those processes that potentially meet the AKART/BAT standard. Further design decisions should be based upon data from the samples to be collected in 1992.

This page intentionally left blank.

3.0 GUIDANCE FOR SELECTING TREATMENT TECHNOLOGY

The procedure used for determining the BAT to be utilized in managing effluent streams at the Hanford Site is contained in *Best Available Technology (Economically Achievable) Guidance Document for the Hanford Site* (WHC 1988). As applied to any specific stream or combination of streams, the procedure incorporates the flexibility necessary to support determination of BAT without limitation as to the variety or concentrations of individual contaminant species.

Section 3.1 provides a brief summary of the BAT determination procedure. Section 3.2 describes the steps taken in applying the procedure to identify, compare, and select process technologies for treating the N Reactor wastewater.

3.1 OVERVIEW OF THE BAT DETERMINATION PROCEDURE

Many Hanford Site effluent streams are unique in terms of the variety of contaminant species and their associated concentrations. Hence, the approach to selecting BAT for treatment of these streams must include consideration and evaluation of a large number of related components.

In general, federal and state regulations do not explicitly identify effluent treatment levels required for Hanford Site wastewater streams. Regulations do establish ambient water quality criteria for surface water or groundwater receiving treated effluent. The water quality criteria can be used to identify parameters of interest in a waste stream that may adversely affect aquatic species and humans using the surface water. The treatment technology identification process must include consideration of the ability of candidate BAT systems to effectively treat the parameters of interest to meet these ambient standards.

For certain industrial categories (e.g. petroleum refineries, steam electric power generation facilities), federal and state agencies provide guidance for selecting BAT for treating specific liquid waste streams. That guidance generally does not apply directly to the N Reactor effluent, but may provide some guidance on appropriate treatment levels for selected constituents. Thus, selecting BAT for treating the N Reactor effluent requires identification and evaluation of treatment methods or technologies that are either being applied successfully, or have been approved for application, in treating streams that exhibit contaminant characteristics similar to those of the N Reactor effluent.

For streams or constituents where no applicable effluent limits exist, an important, additional constraint in BAT selection is the case-by-case application of best professional judgement (BPJ) to establish effluent limitations. According to the EPA, BPJ is the highest quality technical opinion developed by a permit writer after consideration of all reasonably available and pertinent data or information. Existing regulatory criteria identify key BPJ considerations including engineering feasibility, environmental objectives, and economic realities.

The BAT selection process has been organized into a series of five steps that can be applied in sequence to determine BAT for a given effluent stream. The resulting procedure is illustrated in Figure 3-1. The first step involves acquisition and correlation of stream-specific data. This step includes determination of applicable or relevant regulatory standards, such as ambient surface water quality criteria, which may be used to set effluent limits for specific wastewater constituents. Any one of the four succeeding steps can determine BAT. Thus, steps two through four are applied in sequence, but only up to the point at which a determination of BAT is reached. Sections 3.1.1 through 3.1.5 provide summaries of the five individual steps.

The resulting BAT selection process relies heavily on the existence of treatment systems that can be adapted for use at the N Reactor. The removal efficiencies of certain technologies that are effective in treating a given contaminant often are reduced by the presence of other contaminants in the stream. Therefore, treatment of the N Reactor effluent requires developing a system consisting of a carefully considered combination of technologies applied to the stream in the proper sequence.

3.1.1 Step 1: Effluent Characterization

The first step in the BAT procedure is to characterize the effluent stream. Characterization consists of identifying and quantifying the physical parameters, chemical constituents, and flow characteristics of the stream.

Comparing the characterization data with applicable or relevant effluent limits provides an indication of the extent of treatment that may be required for specific constituents. The characterization data guide the subsequent search for a treatment process that can provide the necessary reductions in constituent concentration, and determine the capacity and configuration of treatment equipment.

3.1.2 Step 2: Effluent Guidelines Method

Best available technology may be determined based on the identification and evaluation of relevant or applicable effluent guidelines. Federal and state effluent guidelines establish BAT for treatment of certain industrial waste streams. These guidelines can include limits for specific chemical compounds or for radiation exposure. In cases where guidelines exist and for which an industrial waste stream is sufficiently similar to the N Reactor effluent, it may be appropriate to apply the effluent guidelines method.

3.1.3 Step 3: Technology Transfer Method

The technology transfer method can determine BAT by identifying technology that can be duplicated or adapted (i.e. transferred) from operating wastewater management systems or wastewater management systems that have been approved for design and construction in similar applications. Technology transfer entails surveying potentially comparable effluent streams and

Figure 3-1. Best Available Technology (BAT) Determination Process.

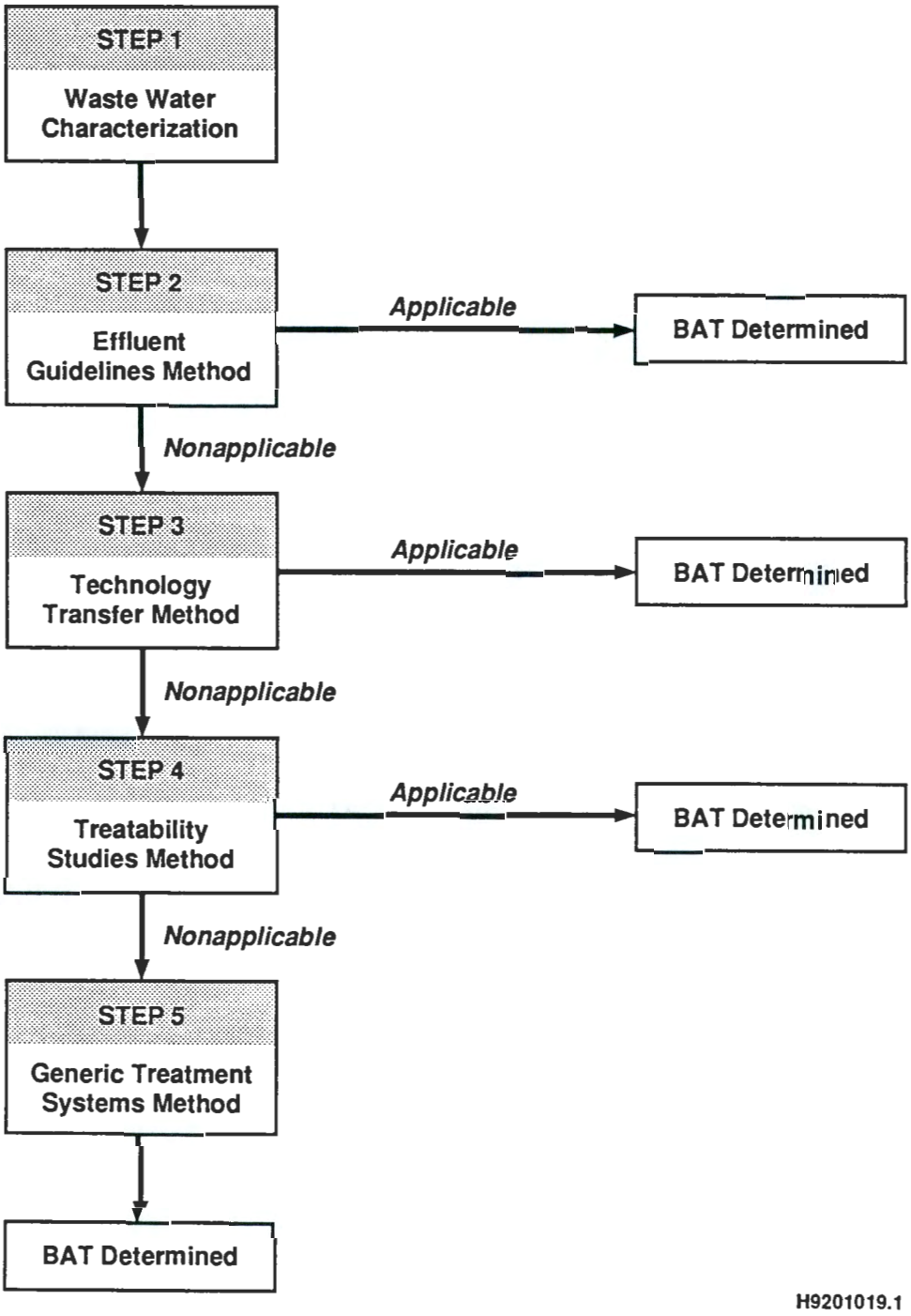

associated BAT treatment systems and then assessing the degree of similarity with the N Reactor effluent. If one or more applications are identified as being sufficiently comparable to the N Reactor effluent in terms of influent characteristics and desired effluent quality, then it may be possible to apply similar treatment technologies and effluent limitations to the N Reactor effluent as BAT.

3.1.4 Step 4: Treatability Studies Method

The treatability studies method is used if BAT cannot be determined using the preceding steps. This method involves performing a series of treatability studies, the results of which may suggest several treatment options that could be applied as BAT for the N Reactor effluent. This method involves identifying one or more systems that have been proven effective in treating streams similar to the N Reactor effluent. It differs from the technology transfer method in that it considers a wider array of applications in which influent characteristics and desired effluent quality are similar to those of the N Reactor effluent, but not sufficiently comparable to support direct technology transfer.

3.1.5 Step 5: Generic Treatment Systems Method

The generic treatment systems method is a procedure for determining BAT in cases where there is little or no relevant data available regarding treatment of similar wastewater streams. The procedure begins with identification and evaluation of generic control methods and continues with the identification and evaluation of methods for treatment of specific stream constituents in the wastewater under consideration. Acceptable methods, individually or in combination with others, are used to formulate a group of alternative treatment systems, each of which may provide successful treatment. The procedure concludes with selection of one alternative system based on site- and stream-specific criteria.

3.2 APPLICATION OF THE BAT PROCEDURE TO THE N REACTOR EFFLUENT

The following sections describe the steps taken to apply the procedure outlined above to determine BAT for the N Reactor wastewater. Sections 3.2.1 through 3.2.5 relate to steps 1 through 5 of the procedure, respectively.

3.2.1 Step 1: N Reactor Wastewater Characterization

The first step in the BAT selection procedure involves assembling all relevant effluent characterization data. Results of that effort were presented in Sections 1 and 2 of this report.

3.2.2 Step 2: Effluent Guidelines Method

The first of the four BAT evaluation methods relies on federal and state guidelines to determine effluent limits for a given effluent stream. The following sections review several potentially applicable or relevant effluent quality and water quality guidelines and standards.

3.2.2.1 Clean Water Act (CWA). Effluent limits have been set under the CWA for 50 industrial source categories and 8 key priority pollutants, including polychlorinated biphenyls (PCBs) and certain herbicides and pesticides. Part 423 of Title 40 of the *Code of Federal Regulations* (40 CFR 423) establishes effluent guidelines and standards for facilities "...primarily engaged in the generation of electricity for distribution and sale, which results primarily from a process utilizing ... nuclear fuel in conjunction with a thermal cycle employing the steam water system as the thermodynamic medium." Standards are established for "low-volume waste streams," including floor drains, and for "chemical metal cleaning wastes" and "metal cleaning wastes," which could include decontamination wastes.

Some of the source streams contributing to the N Reactor effluent fall within those covered by the standard; however, effluent limits for radionuclides are not established under 40 CFR 423. Therefore, the effluent limits established in 40 CFR 423 are not sufficient for establishing BAT. The standards may be considered along with other water quality guidelines and standards in establishing comparative levels for evaluating potential treatment systems for the N Reactor effluent.

3.2.2.2 Radiation Exposure Limits. Radiation protection standards adopted by the DOE, EPA, and U.S. Nuclear Regulatory Commission (NRC) for offsite or uncontrolled areas may be considered analogous to water quality standards. These standards set upper bounds on the acceptable consequences of a discharge, with these bounds expressed in terms of risk rather than pollutant concentrations.

- **Department of Energy Orders.** The DOE has established requirements for disposing of wastewater on the Hanford Site. These requirements are contained in a set of orders that require protection of public health and safety and are intended to control, to the extent possible, adverse impacts to the environment. Liquid disposal practices on the Hanford Site are conducted in accordance with these requirements.

  For DOE facilities, DOE Order 5400.5 (DOE 1990) establishes a public exposure limit of 100 millirem per year (mrem/yr) from all facility sources by means of all exposure pathways, with limits of 10 mrem/yr for exposure to airborne releases and 4 mrem/yr for exposure through consumption of drinking water. To implement these exposure-based limits, the order establishes ambient derived concentration guidelines (DCGs) for releases to surface water and groundwater, with 1 DCG being the annual average concentration needed to exceed the 100 mrem/yr limit, assuming that the only exposure pathway is through drinking water.

The order sets DOE policy with respect to the treatment of wastewater discharges, establishing 1 DCG as the screening level that triggers evaluation of potential treatment technologies for the wastewater discharge by means of the BAT process. The order also requires that treatment be consistent with DOE As Low As Reasonably Achievable (ALARA) policy, which is similar in objectives to the AKART policy developed by Ecology. As such, the application of the DOE BAT process to wastewater streams may result in an additional level of control, as well as contribute to the overall ALARA program at the Hanford Site.

- **Environmental Protection Agency Standards.** The EPA limits for total annual radiation doses to members of the public are 25 mrem/yr to the whole body, 75 mrem/yr to the thyroid, and 25 mrem/yr to any other organ (40 CFR 190 and 191 Subpart A). The limits specified in 40 CFR 190 for commercial electric power generation apply to the cumulative effects of all activities that are part of a nuclear fuel cycle. The limits specified in 40 CFR 191 are for activities related to the management and disposal of spent nuclear fuel, high-level wastes, and transuranic radioactive wastes at any facility regulated by the NRC or at DOE disposal sites for transuranic wastes, spent fuel, or high-level wastes. Similar limits for low-level waste may be included in future 40 CFR 193 regulations.

- **Nuclear Regulatory Commission Standards.** The NRC regulations in 10 CFR 50 set licensing standards for nuclear facilities, including separation facilities and reactors operated primarily to produce uranium and plutonium. Although Hanford Site facilities are exempt from 10 CFR 50, these standards provide guidance on design objectives and limiting conditions for radiation releases.

  Standards established for new commercial reactors under 10 CFR 50 require that these new facilities be designed and operated to comply with ALARA, as designated by 10 CFR 50, Appendix A numerical standards. These standards limit offsite doses from each reactor to not more than 3 mrem/yr to the whole body and 10 mrem/yr to any organ, and additionally require use of all controls that can reduce exposures within a 50-mile radius at a cost of $1,000/man rem or less. Appendix A of 10 CFR 50 further advises that the maximum dose in unrestricted areas due to all liquid effluents from all reactors at a site should not exceed 5 mrem/yr, and that radiation releases in liquid effluents from each reactor should not exceed 5 curies per year (Ci/yr). The standards are set without regard to existing water quality and use.

  Standards for allowable levels of radionuclides in effluents released from NRC licensed facilities are also established in 10 CFR 20.106, which references 10 CFR 20 Appendix B. Appendix B contains tables of acceptable ambient radionuclide concentrations above background, derived in a fashion similar to DOE DCGs.

- **Summary.** Radiation standards alone are not adequate for BAT determination for the N Reactor effluent because of the postulated presence of constituents of concern other than radionuclides; however, they may be used to establish comparative effluent levels to evaluate the effectiveness of alternative treatment systems.

3.2.2.3 Hazardous Waste Standards. Ecology and EPA have promulgated standards related to dangerous and hazardous wastes that may affect the limits to be established on discharges from N Reactor. Federal standards for hazardous waste are promulgated under the *Resource Conservation and Recovery Act of 1976* (RCRA) and the *Hazardous and Solid Waste Amendments of 1984* (HSWA). State standards for dangerous wastes (which encompass federal hazardous wastes) are promulgated pursuant to Chapter 70.105 of the Revised Code of Washington (RCW), the Washington State *Hazardous Waste Management Act of 1976*.

These standards typically are applied to waste streams that are dangerous waste, or that result from processing dangerous wastes. The agencies also may utilize these standards to ensure that the treated N Reactor effluent will not be a dangerous waste, or will not cause circumstances in the environment that could become subject to dangerous waste regulation in the future.

- **Waste Designation.** The procedure for determining if a waste is dangerous is set forth in the Washington Administrative Code (WAC) Parts 173-303-080 through 173-303-103. The federal counterpart is 40 CFR 261. In addition to various lists of dangerous wastes, these regulations can designate a waste to be dangerous on the basis of the concentrations of constituents present in the waste. These concentration based designation standards include the following:

  - The toxicity characteristic (TC)
  - Acute toxicity
  - Halogenated hydrocarbon (HH) concentrations
  - Polycyclic aromatic hydrocarbon (PAH) concentrations
  - Carcinogen concentrations.

  Based upon data collected in 1990, Westinghouse Hanford has determined that the N Reactor effluent is not a dangerous waste as defined by concentration-based standards (WHC 1990a). The assumed waste stream composition presented in Table 2-1 also would not be designated a dangerous waste under concentration-based standards. Furthermore, the treated N Reactor effluent is not anticipated to be a dangerous waste under these standards. However, secondary wastes from the N Reactor effluent treatment process, which will contain waste constituents in higher concentrations than those present in the original wastewater, may be dangerous wastes.

  Toxicity characteristic limits are adopted under WAC 173-303-090 and 40 CFR 261.24. These standards set maximum concentrations for certain chemicals that, if exceeded in a waste stream, cause the waste stream to be designated a dangerous waste. None of the compounds for which TC limits have been established are present in the N Reactor effluent in concentrations exceeding the TC limits. Since the anticipated treatment system is designed to further reduce

the concentrations of these compounds, it is also unlikely that the treated N Reactor effluent would be designated a dangerous waste under the TC limits.

Acute toxicity is a designation unique to Washington regulations, adopted under WAC 173-303-084 and 173-303-101. If a compound or mixture of compounds is present in a waste stream at sufficient concentrations to be acutely toxic to certain animal species, then the waste stream is designated a dangerous waste. Since the acute toxicity of individual compounds can vary widely and there are no fixed concentration limits, it is not possible to identify exact acute toxicity numerical criteria for constituents in the N Reactor treated effluent. It may be necessary to perform toxicity calculations or tests on surrogate waste streams or on actual effluent after the system becomes operational. However, based on expected constituents and concentrations, it is unlikely that treated or untreated effluent would be designated dangerous waste for acute toxicity; in general, the total concentration of even the most toxic of compounds must exceed 10 ppm for a waste to be acutely toxic under Washington regulations.

The HH, PAH, and carcinogen designations also are unique to Washington regulations. The associated standards are set forth in WAC 173-303-084, 173-303-102, and 173-303-103. The presence of HH, PAH, or carcinogenic compounds generally will not result in a dangerous waste designation unless a concentration of 100 ppm (for HH) and 10,000 ppm (for PAH and carcinogenic) of these compounds is exceeded. None of the HH, PAH, or carcinogenic compounds present in the N Reactor effluent approach these concentrations. Since the anticipated treatment system is designed to further reduce the concentrations of these compounds, it also is unlikely that the treated N Reactor effluent would be designated a dangerous waste under these standards. Thus HH, PAH, and carcinogenic compounds in the N Reactor wastewater are not expected to cause the treated effluent to be designated a dangerous waste.

- **Land Disposal Restrictions.** EPA has adopted regulations that restrict the management of certain hazardous wastes in land disposal units (e.g., landfills or surface impoundments). These land disposal restrictions (LDRs) are promulgated in 40 CFR 268. While Ecology has implemented its own LDR program (WAC 173-303-140), it has not yet incorporated the concentration- or technology-based federal LDR standards into state regulations.

  Many of the LDRs are based on allowable concentrations of hazardous constituents in proscribed hazardous wastes. If analyses show that allowable concentrations are not exceeded, then the waste is not prohibited from land disposal. This does not mean that the waste is no longer designated as hazardous waste, only that it is acceptable for management in RCRA-permitted land disposal units.

  Concentration- and technology-based limits established for the LDRs are derived primarily from EPA data indicating the level of treatment that can be achieved for various hazardous waste streams

using demonstrated and generally available treatment technologies. Thus, the LDRs are often specific to the waste type and treatment methods evaluated by EPA.

Although the current preferred option for disposal of the treated N Reactor effluent involves direct discharge to the Columbia River, discharges to ground or lined surface impoundments still may be considered. If the treated N Reactor effluent is not a hazardous waste, the LDRs are not legally applicable to discharges of the effluent to land disposal units. However, the agencies may consider the concentration-based LDRs to represent levels that generally can be achieved through the application of available and established management practices. Treatment methods identified in technology-based LDR limits may be considered as potential BAT by the regulatory agencies.

- **Corrective Action Levels.** On July 27, 1990, EPA proposed 40 CFR 264 Subpart S, containing regulations related to corrective actions at solid waste management units. Proposed 40 CFR 264.521(a)(2) identifies various criteria for determining when corrective actions should be considered necessary. Numerical concentrations were developed by EPA for many hazardous constituents and issued for comment. In addition to being compound-specific, the concentrations also are presented by media (i.e., air, water, or soil); thus, different action levels are identified depending on the environmental media affected by the compounds.

  In general, EPA has proposed to use these criteria as a basis for requiring corrective actions (e.g., soil remediation) at hazardous waste facilities. Since the corrective action levels are derived from various health- and environmental risk-based models, the agencies may use these levels for evaluating effluent limits for N Reactor.

3.2.2.4 Drinking Water Standards. The Washington State Department of Health and EPA have promulgated regulations to protect the quality of water supplied for human use and consumption. Generally referred to as drinking water standards, they are promulgated under Chapter 43.20 RCW, *State Board of Health Act*, and from federal authority under the *Safe Drinking Water Act of 1974*. The drinking water standards are directed primarily at persons who provide public water supplies. However, because the standards are based on human health protection, they frequently are used as guidance in determining allowable ambient chemical concentrations in waters that may be used for human consumption.

The Department of health has promulgated drinking water standards in WAC 248-54, "Public Water Supplies." Federal drinking water standards appear in 40 CFR 141 and 143. Drinking water standards generally are classified as follows:

- Maximum contaminant level goals (MCLGs) established for carcinogens generally are set as close to zero as possible, and are not supposed to account for economic or treatability factors.

- Maximum contaminant levels (MCLs) established for toxics and carcinogens are to be set at non-toxic levels, and as close as possible to MCLGs, with some allowance for economic and technical factors.

- Secondary maximum contaminant levels (SMCLs) established primarily on the basis of secondary water effects such as color, odor, and taste generally are set for compounds that are not considered to be toxic or carcinogenic to humans.

Until recently, drinking water standards existed for only about a dozen compounds. Changes to federal regulations have added nearly fifty additional compounds; many more compounds are projected for addition over the next several years. Both Ecology and EPA utilize the drinking water standards to determine the potential for adverse impacts on groundwater and surface water. Water quality that does not meet the drinking water standards has been, and is likely to remain, a standard basis for identifying environmental concerns.

The drinking water standards may be considered relevant criteria by EPA and Ecology. In particular, the human health-based MCLs are likely to be considered in setting effluent discharge limits.

3.2.2.5 Ambient Surface Water Quality Standards. Ecology and EPA have developed ambient surface water quality criteria designed to prevent adverse effects to aquatic organisms and to humans who may be consuming aquatic organisms or surface water. Ecology has promulgated surface water regulations pursuant to Chapter 90.48 RCW, *Water Pollution Control Act* (WPCA). EPA has established water quality criteria (although not yet promulgated in regulations) pursuant to its authority under the CWA. The focus of these standards and criteria is to define ambient levels of chemical concentrations that are not expected to pose adverse effects if present in the aquatic environment.

Federal surface water criteria are established in EPA program guidance documents, principally *Quality Criteria for Water*, commonly known as the Gold Book (EPA 1986). Proposed regulations in 40 CFR 131 establish surface water quality criteria for those states not complying with Section 303(c)(2)(B) of the CWA (*Federal Register*, Vol 56, No 223, November 19, 1991). Ecology generally has adopted the Gold Book criteria into its regulations, either directly or by reference. Ecology regulations currently are found in WAC 173-201, "Water Quality Standards for Surface Waters of the State of Washington." Proposed regulations contained in WAC 173-203, which will replace WAC 173-201 when adopted, include water quality standards for three additional compounds (aluminum, arsenic(III), and dissolved chloride), and establish risk-based criteria for evaluating human health impacts.

- **Protection of Aquatic Life.** One goal of the ambient surface water standards is the protection of aquatic species from direct toxic effects. Toxicity is addressed in terms of acute (short-term) and chronic (long-term) effects. In general, acute criteria may never be exceeded anywhere in a surface water body (including the point of effluent discharge), because aquatic organisms could suffer adverse

effects even from short-term exposure. Chronic criteria may not be exceeded except when absolutely necessary for short-term durations, or in relatively small discharge mixing zones.

Many of the acute and chronic toxicity criteria are based on lowest observed effects levels (LOEL) for sensitive aquatic species. In some cases, the LOEL or the species of interest may not be pertinent to a particular surface water body. In addition, some of the criteria are temperature, hardness, or pH dependent. The derivation of particular toxicity criteria may affect their relevance to a specific discharge scenario.

- **Protection of Human Health.** Another goal of the surface water standards is the protection of human health. Criteria are established for organism consumption only, where the water does not also serve as a source of drinking water (e.g., marine or estuarine waters). Criteria also exist for consumption of organisms and water, where the surface water is used as a drinking water source. The latter criteria typically are more restrictive, because they assume an additional route of exposure to chemical compounds.

  Human consumption criteria also may reflect certain factors related to the tendency of some compounds (typically carcinogens) to accumulate and/or bioconcentrate in aquatic species before consumption. Thus, the EPA Gold Book lists a range of criteria reflecting 1 in 100,000, 1 in 1,000,000, and 1 in 10,000,000 incremental human cancer risk from consuming affected aquatic organisms, or organisms and water. The standard agency practice has been to strive for the lowest possible risk level, and except in rare instances, to accept no greater risk than 1 in 1,000,000. Proposed regulations in WAC 173-203 establish the 1 in 1,000,000 risk threshold as the basis for setting human-health based surface water quality standards.

  In addition to the numeric criteria, WAC 173-203 has general narrative criteria promoting an "anti-degradation policy." In many cases, it is not sufficient to show that discharges entering a surface water will not exceed ambient quality standards. The anti-degradation policy requires that all available and reasonable efforts be undertaken to avoid degrading the surface water quality. In order to show that water quality will not be degraded, or that any degradation will be minimized, current and projected water conditions may have to be established to determine the highest potential use classification. Thus, background (i.e., uninfluenced by anthropogenic activities) water quality may be used by Ecology as a criterion for limiting effluent discharges.

Ecology and EPA are likely to consider the relevant surface water standards in setting discharge limits for treated effluent from N Reactor.

3.2.2.6 Groundwater Quality Standards. Ecology recently adopted regulations pursuant to the state WPCA setting forth standards for protection of groundwater. The purpose of these standards is to establish criteria that must not be exceeded in order to protect existing and potential future uses of

groundwater. The presumption by Ecology is that groundwater, other than naturally contaminated or nonusable waters (e.g., perched and seasonal, brackish), should be reserved and protected for use as drinking water. Although the current preferred option for disposal of the treated N Reactor effluent would involve direct discharge to the Columbia River, discharges to ground or lined surface impoundments still may be considered. Thus, the agencies may consider the groundwater standards when setting effluent limits for N Reactor.

Ecology groundwater standards are promulgated in WAC 173-200, "Water Quality Standards for Ground Waters of the State of Washington." These standards establish both numeric and narrative criteria. Numeric criteria are derived from federal and state MCLGs, MCLs, and SMCLs. For carcinogens, Ecology has adopted a risk-based equation and standard exposure assumptions for calculating a 1 in 1,000,000 incremental human cancer risk from consumption of affected water. The numeric criteria are considered by Ecology to be maximum allowable levels after all other options have been exhausted. If lower levels can be achieved through more aggressive treatment or management options, then Ecology will require such options. Discharges that potentially could cause ambient groundwater quality to exceed numeric criteria generally will not be allowed by Ecology unless some overriding public interest will be served.

As for surface water, WAC 173-200 contains a narrative anti-degradation policy for the protection of ambient groundwater quality. Based upon this policy, Ecology may use background groundwater quality to establish effluent discharge limits.

3.2.2.7 Effluent Guidelines Summary. In summary, none of the effluent guidelines and water quality standards described above are adequate by themselves for establishing BAT for the N Reactor effluent. However, the various standards and criteria do offer guidance in the development and evaluation of alternatives in the subsequent BAT selection steps by identifying constituents for which EPA and Ecology may require treatment. They also may be used to establish levels for comparison of treated effluent quality to potentially relevant regulatory standards.

Table 3-1 presents comparative levels derived for the treated N Reactor effluent using the following guidelines and criteria:

- Ambient Surface Water Quality Criteria (WQC) for freshwater species and human consumption of water and organisms from the EPA Gold Book, and proposed WAC 173-203 and 40 CFR 131 regulations

- Federal MCLs for drinking water

- The human health-based proposed RCRA corrective action levels, or health-risk based levels calculated using formulas similar to those for the corrective action level model

- Concentration-based LDR criteria

Table 3-1. N Reactor Treatment System Relevant Regulatory Criteria and Required System Performance. (sheet 1 of 2)

Chemical	Assumed influent concentration (ug/L)	Comparative levels		Required minimum removal			
		Chronic (ug/L)	Acute (ug/L)	Chronic (DF)	Acute (DF)	Chronic (%)	Acute (%)
Inorganics							
Ammonia	2,230	16.66[a]	128.18[a]	133.8	17.4	99.253	94.252
Arsenic	130.8	1.80E-02[b]		7,266.7		99.986	
Cadmium	20	0.76[a,c]	2.2[a,c]	26.3	9.1	96.203	89.000
Chloride	12,500	230.00[c]	860.00[c]	54.3	14.5	98.160	93.120
Chromium (VI)	60.8	11[a,c]	16[a,c]	5.5	3.8	81.908	73.684
Iron	2,960	300[a]		9.9		89.865	
Lead	389.4	1.66[a,c]	42.6[a,c]	234.5	9.1	99.574	89.000
Manganese	86.9	50[a]		1.7		42.463	
Selenium	420.8	5.00[c]	20.00[c]	84.2	21.0	98.812	95.247
Silver	4.9	0.12[a,c]	1.7[a,c]	40.8	2.9	97.551	65.310
Zinc	121	0.66[a,c]	0.6[a,c]	183.3	201.7	99.455	99.504
Organics							
Acetone	173	50[d]		3.5		71.098	
2-Butanone	291	50[d]		5.8		82.818	
Hydrazine	312	0.01[e]		31,200.0		99.997	
Hexone (MIBK)	103	50[d]		2.1		51.456	
Trichloromethane	51.9	0.19[a]		273.2		99.634	
Radionuclides	(p/CiL)	(p/CiL)					
Total Alpha	49.9	0.3[c,g]		166.3		99.399	
Total Beta	1,650,000	30[c,g]		55,000.0		99.998	
Am-241	70.3	1.2[c,f]		58.6		98.293	
Co-60	7,000	200[c,f]		35.0		97.143	
Cs-134	1,670	80[c,f]		20.9		95.210	
Cs-137	471,000	200[c,g]		2,355.0		99.958	
H-3	5,540,000	20,000[c,f]		277.0		99.639	
Mn-54	6,040	1,000[c,g]		6.0		83.444	
Pb-210	29.7	1[c,g]		29.7		96.633	
Pu-238	10.9	1.6[c,f]		6.8		85.321	
Pu-239/240	66.6	1.2[c,f]		55.5		98.198	

Table 3-1. N Reactor Treatment System Relevant Regulatory Criteria and Required System Performance. (sheet 2 of 2)

Chemical	Assumed influent concentration (ug/L)	Comparative levels		Required minimum removal			
		Chronic (ug/L)	Acute (ug/L)	Chronic (DF)	Acute (DF)	Chronic (%)	Acute (%)
Radium (Ra-226)	0.33	0.3[c,g]		1.1		9.091	
Ru-106	17,200	100[c,g]		172.0		99.419	
Sr-90	1,760,000	3[c,g]		586,666.7		100.000	
Columbia River Background							
Temperature (deg C)	16.4						
pH (Dimensionless)	7.41						
Hardness (mg/L)	60						

[a]"Quality Criteria for Water 1986," U.S. EPA 440/5-86-001, May 1, 1986.
[b]Proposed Criteria for Priority Toxic Pollutants, Federal Register, Vol 56, No 223, November 19,1991.
[c]Proposed Chapter 173-203 WAC, Water Quality Standards for Surface Waters in the State of Washington, June 5, 1991.
[d]Land Disposal Restriction guidelines (40 CFR Part 268).
[e]Proposed 40 CFR Part 264, Subparts RCRA Corrective Action Levels.
[f]Federal Maximum Contaminant Level for drinking water.
[g]Value calculated from 1/100th the Column 2, Table II, Appendix A values from WAC 402-24-220.

- Department of Energy DCGs from DOE Order 5400.5
- Nuclear Regulatory Commission limits for discharge to uncontrolled areas, 10 CFR 20, Appendix B, Table II and similar values found in WAC 402-24-220.

In all cases, the comparative levels in Table 3-1 are the most restrictive values identified. Values also are shown for the estimated influent concentrations for the N Reactor effluent and the resulting decontamination factors (DFs) required to meet the comparative levels. The DF for any given contaminant and treatment unit operation or treatment train is defined as the ratio of the influent concentration to the effluent concentration. Comparison of the most restrictive levels for the effluent with the influent levels indicates that the N Reactor treatment system likely will be required to reduce concentrations of the following influent constituents:

- Organics
- Inorganics (as dissolved and suspended solids)
- Radionuclides (as dissolved and suspended solids).

3.2.3 Step 3: Technology Transfer Method

The technology transfer method for determining BAT requires the identification of streams that are nearly identical to the N Reactor effluent that are being successfully treated at other sites. If one or more such treatment applications are identified, it is likely that similar treatment technologies may be used and that the established effluent limitations may be adapted for N Reactor. Differing state regulations, however, must be accounted for when utilizing technology transfer to determine BAT.

A national consensus standard has been developed by the American Nuclear Society (ANS) and the American National Standards Institute (ANSI) that addresses the design of wastewater treatment facilities for nuclear reactors. This standard, *American National Standard for Liquid Radioactive Waste Processing System for Light Water Reactor Plants*, ANSI/ANS-55.6-1976, identifies recommended processes for the treatment of several types of reactor wastes, including decontamination and floor drain wastes. For streams like the N Reactor effluent, filtration followed by demineralization, or evaporation followed by ion exchange, is recommended. The standard also provides information on average DFs that can be expected for these unit operations.

Although useful for identifying potential treatment technologies for the N Reactor effluent, this ANSI/ANS standard is not sufficient to establish BAT. The N Reactor is unique in that, unlike commercial reactor plants, reactor operations sought to maximize the production of special nuclear materials such as plutonium. Therefore, the relative and absolute concentrations of many radionuclides in the N Reactor effluent may be somewhat different than those found in wastewater from commercial reactors. Fuel basin wastewater also is specifically excluded from the sources covered by the standard. In most

commercial reactor facilities, fuel storage basin water is treated and recycled, with only a small stream of treated water being "bled" off to prevent contaminant buildup. Additionally, the focus of the standard is radionuclide treatment. Although the recommended technologies are effective in removing suspended and dissolved solids, they generally are not effective for removing organics or hydrazine. Therefore, BAT for the N Reactor effluent cannot be solely established through the technology transfer method.

3.2.4 Step 4: Treatability Studies Method

The treatability studies method may be used to identify BAT when neither effluent guidelines nor technology transfer is applicable. This method utilizes treatability study results to suggest control options that may be BAT. Use of this method is possible if either one of the two following conditions are met:

- A level of treated effluent quality has been accepted for discharge by regulatory agencies
- Current control practices establish a pattern of control efficiency (i.e., percentage removal) or treatment intensity (i.e., number and type of treatment steps).

The first of these conditions does not apply, as permits for discharges sufficiently similar to the N Reactor effluent are not known to have been issued. While there is no definite trend in control efforts for waste stream types similar to the N Reactor effluent, the radionuclide treatment systems recommended under ANSI/ANS standards do provide a basis for further development using the generic treatment system method described below. Treatability tests performed in 1988 at the Liquid Effluent Treatment Facility (LETF) pilot plant on N Reactor effluent provide useful data for selecting and sizing treatment equipment for the current N Reactor effluent stream. However, the focus of these studies was radionuclide removal; very little data on dissolved solids and organic removal efficiencies are available from the LETF pilot studies. Additionally, significant changes in wastewater composition may have occurred since 1988. Therefore, existing treatability data do not by themselves establish BAT for the N Reactor wastewater.

3.2.5 Step 5: Generic Treatment Systems Method

As described in the preceding sections, technology transfer and treatability studies are not solely appropriate methods for determining BAT for treatment of N Reactor effluent. Therefore, it was necessary to apply the generic treatment systems method as outlined in Section 3.1.5. Figure 3-2 illustrates the steps taken in applying this method to the N Reactor wastewater.

The generic treatment method requires that alternative treatment processes be developed for the wastewater using selected common treatment technologies that appear applicable. The treatment provided by these

Figure 3-2. Procedures for Selecting BAT Using the Generic Treatment Systems Method.

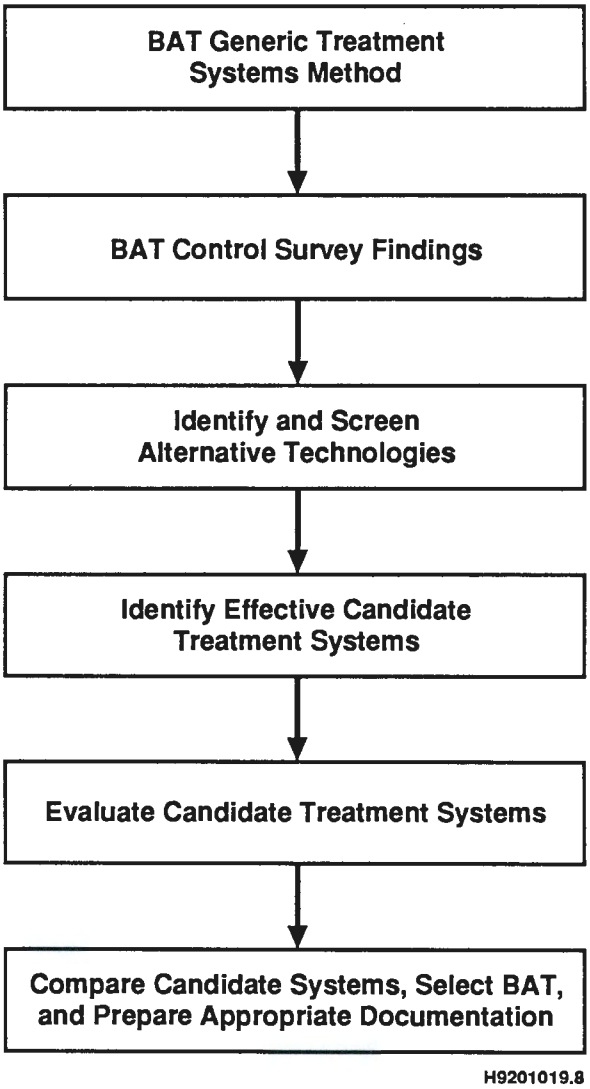

alternatives is then compared on the basis of cost per reduction in overall effluent toxicity. The process for determining this relationship is described below.

The WQC for protecting human health and freshwater aquatic species were discussed in Section 3.2.2.5. The WQC are used to calculate toxic weighting factors (TWF) shown in Table 3-2. The TWFs are equivalency factors, standardized to copper, that reflect the relative toxicity of a given compound. They are used to assess the cost-effectiveness of toxic pollutant removal by multiplying the mass of a contaminant removed by its TWF. The sum of these calculations for each contaminant is the total toxic equivalent mass removed by the treatment process. The TWFs are calculated from the given WQC using the following equation as identified in the Hanford Site BAT guidance document (WHC 1988):

$$TWF = \frac{5.6}{WQC_{hh}} + \frac{5.6}{WQC_{chr}} \qquad (1)$$

where WQC_{hh} and WQC_{chr} are the human health WQC and fresh water species chronic exposure WQC.

The TWFs for the radionuclides are calculated using the lowest value of the following:

- The MCL for drinking water
- 1/100 of the value reported in WAC 402-24-220
- 1/100 of the value reported in 40 CFR Part 20, Appendix B, Table II.

The above levels are based upon the Washington State definition of deleterious concentrations of radionuclides in surface waters found in proposed Chapter 173-203 WAC regulations. These concentrations are converted from μCi/L to μg/L and used in the above equation the same way as the WQC.

The results of applying the generic treatment systems method are provided in subsequent sections of this report. The procedure begins with a control survey to determine the necessary types of treatment for the N Reactor effluent; this survey is described in Section 4.1. The next step, as described in Sections 4.2 through 4.5, involves identification and screening of potential management options and treatment technologies. After the screening process is completed, five candidate treatment systems or management options are identified. Each of the five candidates consists of a combination of the treatment technologies remaining for consideration. Those candidate systems are presented in Section 4.6. Detailed evaluations of the candidate treatment systems are reported in Section 5. The process continues with a comparison of the candidates relative to each other, culminating in the selections of recommended alternatives. The comparison and selection processes are described in Section 6.

Table 3-2. Toxicity Weighting Factors. (sheet 1 of 3)

Constituent	Regulatory standards			Toxicity weighting factor		
	Gold book HCWO (ug/L)	Gold book FWC (ug/L)	WSWQC FWC (ug/L)	Human health	Environmental protection	Total factor
Inorganics						
Ammonia		16.66	16.66	0.00E+00	3.36E-01	3.36E-01
Arsenic	1.80E-02	190.00	190.00	3.11E+02	2.95E-02	3.11E+02
Barium	1,000.00			5.60E-03	0.00E+00	5.60E-03
Boron						
Cadmium	10.00	0.76	0.76	5.60E-01	7.37E+00	7.93E+00
Calcium						
Chloride			230.00		2.43E-02	2.43E-02
Chromium (VI)	50.00	11.00	11.00	1.12E-01	5.09E-01	6.21E-01
Fluoride						
Iron	300.00	1,000.00		1.87E-02	5.60E-03	2.43E-02
Lead	50.00	1.66	1.66	1.12E-01	3.37E+00	3.48E+00
Magnesium						
Manganese	50.00			1.12E-01	0.00E+00	1.12E-01
Nitrate	10,000.00			5.60E-04	0.00E+00	5.60E-04
Potassium						
Selenium	10.00	35.00	5.00	5.60E-01	1.12E+00	1.68E+00
Silicon						
Silver	50.00	0.12	0.12	1.12E-01	4.67E+01	4.68E+01
Sodium						
Strontium						
Sulfate						
Uranium						
Zinc		0.66	0.66	0.00E+00	8.48E+00	8.48E+00
Organics						
Acetone						
1-butanol						
2-butanone						
BHT						

Table 3-2. Toxicity Weighting Factors. (sheet 2 of 3)

Constituent	Regulatory standards			Toxicity weighting factor		
	Gold book HCWO (ug/L)	Gold book FWC (ug/L)	WSWQC FWC (ug/L)	Human health	Environmental protection	Total factor
Hydrazine						
Hexone (MIBK)						
Toluene	14,300.00			3.92E-04	0.00E+00	3.92E-04
Trichloromethane	0.19	1,240.00		2.95E+01	4.52E-03	2.95E+01
Total Organic Carbon						
Total Carbon						
Total Organic Halides						
Columbia River background						
Temperature (deg C)	16.4					
pH (Dimensionless)	7.41					
Hardness (mg/L)	60					

FWC = Chronic toxicity for freshwater organisms.
HCWO = Maximum recommended levels for human consumption of water and organisms.
Gold Book = "Quality Criteria for Water 1986," U.S. EPA 440/5-86-001, May 1, 1986.
WSWQC = Washington State Water Quality Criteria (Chapter 173-203 WAC).

Table 3-2. Toxicity Weighting Factors. (sheet 3 of 3)

Radionuclides	Regulatory standards			Minimum standard (ug/L)	Toxicity weighting factor
	SDWA MCLs (pCi/L)	WAC 173-203-050 (pCi/L)	40 CFR 20 Appendix B Table II		
Total Alpha*	1.50E+01	3.00E-01	3.00E+01	6.25E-07	8.96E+06
Total Beta*		3.00E+01	3.00E+03	1.08E-07	5.19E+07
Am-241	1.20E+00	1.20E+00	4.00E+03	3.50E-07	1.60E+07
Cm-242	4.00E+01	4.00E+01	2.00E+04	1.21E-08	4.63E+08
Cm-244	2.40E+00	2.40E+00	7.00E+03	2.96E-08	1.89E+08
Co-60	2.00E+02	2.00E+02	5.00E+04	1.77E-07	3.16E+07
Cs-134	8.00E+01	8.00E+01	9.00E+03	6.15E-08	9.10E+07
Cs-137*	1.20E+05	2.00E+02	2.00E+04	1.18E-06	4.73E+06
C-14	2.80E+03	2.80E+03	8.00E+05	6.28E-04	8.92E+03
H-3	2.00E+04	2.00E+04	3.00E+06	2.07E-06	2.71E+06
Mn-54	2.00E+03	1.00E+03	1.00E+05	1.29E-07	4.34E+07
Pb-210	1.20E+00	1.00E+00	1.00E+02	1.31E-08	4.28E+08
Pu-238	1.60E+00	1.60E+00	5.00E+03	9.35E-08	5.99E+07
Pu-239/240*	1.20E+00	1.20E+00	5.00E+03	2.50E-06	2.24E+06
Radium*	5.00E+00	3.00E-01	3.00E+01	3.03E-07	1.85E+07
Ru-106*	2.40E+02	1.00E+02	1.00E+04	1.49E-08	3.75E+08
Sr-90*	8.00E+00	3.00E+00	3.00E+02	1.08E-08	5.19E+08
U-234	2.00E+01	2.00E+01	3.00E+04	3.20E-03	1.75E+03
U-235	2.40E+01	2.40E+01	3.00E+04	1.11E+01	5.04E-01
U-238	2.40E+01	2.40E+01	4.00E+04	7.14E+01	7.84E-02

All regulatory limits are based upon soluble forms of the radionuclides.
*Radium is assumed to be Ra-226.
For Ru-106 calculations, the specific activity of Ru-106/Rh-106 is used.
For Sr-90 calculations, the specific activity of Sr-90/Y-90 is used.
For Cs-137 calculations, the specific activity of Cs-137/Ba-137 is used.
For Pu-239/240 calculations, 6% Pu-240 is assumed.
Total Alpha calculations use specific activity for Pu-239/240.
Total Beta calculations use specific activity for Sr-90.
**Values are the lower of either the MCL or 1/100 the values reported in WAC 402-24-220.

This page intentionally left blank.

4.0 TREATMENT ALTERNATIVES

This section documents the screening procedure used to develop integrated treatment system alternatives for the N Reactor wastewater stream. Each of the candidate systems has the potential to successfully treat the N Reactor wastewater and to properly manage associated secondary wastes. The text discusses essential treatment system criteria, describes an array of potential treatment technologies, and explains how the BAT procedure was applied to reduce the matrix of technologies to five candidate treatment systems for further evaluation and comparison.

4.1 SCREENING OF EFFLUENT TREATMENT TECHNOLOGIES

During the initial screening effort, the generic treatment systems and technology transfer methods as described in Sections 3.2.3 and 3.2.5 identified a large array of alternatives for treating the subject effluent. The technologies include source controls as well as treatment processes with the potential for removing suspended solids, organics, and dissolved solids from the effluent. In order to qualify for further consideration, these technologies, individually or in combination within an integrated system, must satisfy the following general criteria.

- **Effectiveness.** Treatment technologies must have the potential to meet comparative effluent levels identified in Table 3-1.

- **Implementability.** Treatment technologies and treatment systems are assessed in terms of ALARA; maintainability; reliability and technological maturity; time required for design, procurement and construction; the availability of pre-engineered systems; and manpower requirements for operation.

- **Cost.** Treatment systems are evaluated based on both installed equipment and operating costs.

Acceptable wastewater treatment technologies, individually or in combination within an integrated system, must also be able to effectively treat the various categories of constituents expected in the wastewater. There are two routes to effective treatment. The first route consists of physical, chemical, and thermal conversion of harmful substances to a benign state. The second route consists of capture and concentration of harmful substances into a waste stream which is disposed of separately from the wastewater, supplemented with secondary waste treatment as necessary to achieve the degree of stability required for safe disposal of the secondary waste. The wastewater is expected to contain the following types of constituents:

- Inorganics as suspended solids

- Inorganics as dissolved solids

- Organics
- Radionuclides (as suspended and dissolved solids).

Table 4-1 presents a matrix of the technologies considered, along with several other alternatives including source control, no action, and zero discharge. The table indicates which type of target constituents each technology might be expected to treat. Many of the technologies are also somewhat effective in treating constituents other than those shown.

For clarity, the technologies are listed individually in Table 4-1. However, most cases would require a combination of two or more compatible technologies to effectively treat the full range of constituents in the wastewater. Each of the technologies in the matrix was evaluated within the context of the three criteria (effectiveness, implementability, and cost) to reduce the list to only those suitable for the current application.

Sections 4.2 through 4.4 present generalized descriptions of the technologies. The descriptions include rationales for retaining or eliminating those particular technologies from further consideration.

4.2 NO ACTION

The objective of applying BAT is to reduce the quantity of harmful wastes contained in the N Reactor effluent to levels consistent with guidelines developed from relevant effluent comparative levels. Examination of the wastewater characteristics indicate that treatment is necessary to achieve that objective. Treatment technologies have been identified and are available to implement the objective. Moreover, it is the stated intent of DOE to cease discharges of contaminated water to the soil column. Therefore, no action is not an acceptable alternative.

4.3 SOURCE TREATMENTS

The following sections describe actions or alternatives available for reducing the volume of the wastewater or its constituent concentrations at the sources.

4.3.1 Source Control

In support of a best management practices (BMP) approach, Westinghouse Hanford has instituted a program of physical and administrative source controls and waste minimization to reduce the volume of the N Reactor effluent. These controls, coupled with the reduced operational status of the N Reactor, decreased the average wastewater flow from nearly 6,050 L/min (1,600 gpm) to less than 7.6 L/min (2 gpm). Currently, the major remaining source of effluent at the N Reactor is water from the fuel storage basin. Minor contributors remaining include rainwater infiltration from roof leaks, and intermittent flows from floor drains and building sumps.

Table 4-1. Wastewater Treatment Technologies.

Treatment Technology	Target Contaminant Category			
	Suspended solids	Organics	Dissolved solids	Radionuclides
No Action				
Source Treatment				
Source control	•	•	•	•
Zero discharge (offsite treatment)	•	•	•	•
End-of-Pipe Treatments				
Suspended solids removal				
Sedimentation/clarification	•			•
Bag filtration	•			•
Deep bed filtration	•			•
Cartridge filtration	•			•
Microfiltration	•			•
Ultrafiltration	•			•
Organics removal				
Activated carbon adsorption		•		
Biological treatment		•		
Supercritical fluid extraction		•		
Air stripping		•		
UV/ozone/peroxide		•		
Oxidation		•		
Pervaporation		•		
Dissolved solids removal				
Coagulation/flocculation			•	•
Evaporation	•		•	•
Vacuum-freezing		•	•	•
Chemical precipitation			•	•
Ion exchange			•	•
Reverse osmosis			•	•
Electrodialysis			•	•
Alumina adsorption			•	•
Algae adsorption			•	•
Supported liquid membrane			•	•

• = Effectively removed by the identified treatment technology.

Waste minimization and further source controls remain appropriate for consideration in relation to the N Reactor wastewater discharge, and should be considered as a part of any treatment system. However, further source controls will not be explicitly considered in the evaluation process as substantial flow reductions already have occurred.

4.3.2 Zero Discharge

Zero discharge (defined as no discharge to the 100-N area soil column or Columbia River) could be implemented at N Reactor through either onsite evaporation or offsite disposal.

Untreated effluent could be collected and periodically shipped to an offsite processing facility. For purposes of this study, the "offsite" option identified would involve shipping the wastewater to the 200 Area Double-Shell Tank (DST) system, for subsequent volume reduction and treatment at the 242-A Evaporator, the Liquid Effluent Retention Facility (LERF), the 200 Area Liquid Effluent Treatment Facility (200 Area LETF), and the Grout Facility.

Zero discharge through shipment of untreated effluent to the DST system is not an economical option for the N Reactor effluent. The cost of offsite treatment is approximately two to four times that for the onsite treatment alternatives presented in Sections 4 and 5. At an average flow rate of 7.6 L/min (2 gpm), an average of more than 3,700,000 L (1,000,000 gal) of wastewater are generated annually. The cost of treating this effluent, exclusive of shipping and transportation costs, have been estimated to be $4.5 million per year (FY 1992 dollars) using the following assumptions and Westinghouse Hanford cost data (WHC 1990b).

- Untreated effluent would be stored in existing tanks at N Reactor and loaded into railcars at an existing railcar facility, with no added capital costs.
- The effluent would be transported to the 204-AR railcar facility, unloaded, and stored in the DST system for processing through the 242-A evaporator.
- After processing through the evaporator, 90 percent of the effluent would be stored and treated in the LERF and LETF and then discharged to the environment. Ten percent of the effluent would be disposed of by means of the Grout Facility.

Disposal of secondary wastes from an onsite treatment process through the DST system may be a cost effective option, and will be considered further.

A second zero-discharge option is onsite treatment followed by total onsite evaporation. Evaporation could be accomplished in either an enclosed system, or in an open evaporation pond after removal of a significant fraction of the radionuclides. Secondary wastes in the form of salts and sludges would be shipped to offsite locations for disposal. This option is discussed further in Section 5.7.

4.4 END-OF-PIPE TREATMENTS

The following sections describe end-of-pipe treatment technologies for both radionuclides and non-radioactive contaminants identified during the screening process. These alternatives are grouped according to the type of contaminant removed. The contaminant types include inorganics as suspended solids, organics, inorganics as dissolved solids, and radionuclides.

4.4.1 Suspended Solids Removal

4.4.1.1 Sedimentation/Clarification. Sedimentation/clarification is the application of gravitational force to remove suspended particles from a fluid. The rate at which solids settle is effected by the size, shape, particle density, and fluid density. Types of sedimentation/clarification equipment include sedimentation basins and inclined-plate separators. Coagulants and flocculants are often added to the waste stream to increase the particle size and sedimentation rate. Following sedimentation/clarification, collected solids can be further dewatered using a drying bed, filtration, or centrifugation. Sedimentation/clarification was retained for further consideration because it typically requires little maintenance and is a standard method for removing suspended solids from wastewater.

4.4.1.2 Bag Filtration. Bag filtration is commonly used to remove particles as small as 1 μm. Bag filtration units consist of fabric bags supported by strainer baskets that are, in turn, housed within rigid casings. Fabric bags can degrade in the presence of certain organics, so materials must be selected carefully. The strainer basket and rigid housing also must be made of carefully selected materials. Bag filters were not considered further because they are more prone to failure than are rigid cartridge filter media and require a high degree of contact maintenance.

4.4.1.3 Deep Bed Filtration. Deep bed filters may contain one or more sizes of filter media such as sand and pulverized coal. The media are layered in a vertical cylinder through which wastewater flows in a downward direction. Particulates collect on the upper surface of the filter media. The collected solids are removed by back flushing. Usually multiple deep bed filters are provided to allow for continuous operation. Deep bed filters are most attractive for treating wastewaters containing relatively high concentrations of large (1-5 μm and larger) particles. This alternative was not considered further because of the low levels of suspended solids in the N Reactor effluent.

4.4.1.4 Disposable Cartridge Filtration. Cartridge filters are used to remove particles ranging in size from submicron to 40 μm from fluids containing 0.01 percent solids or less. Disposable cartridge filters can be constructed of a variety of materials including paper, cloth, and polypropylene. This type of filtration is typically operated with the feed pumped through the cartridges until they are loaded with solids and the pressure differential exceeds operating specifications. The cartridges then are removed to be cleaned or disposed. This alternative was not considered further because of the high level of contact-maintenance required for disposal of cartridge filters.

4.4.1.5 Microfiltration. Microfiltration is used to remove solid particles in the size range of 0.1 to 10 μm (1,000 to 100,000Å). The technology uses elevated pressure to drive liquid waste through a membrane matrix containing extremely fine pores that trap particulates. The pH and organic content of the liquid stream must be compatible with the membrane material to prevent plugging or physical damage. Membrane materials typically are polymeric but also can be ceramic or sintered metal.

Microfiltration is often a semi-continuous operation in which trapped particles are periodically removed by back-flushing the filter membrane with the filtration unit offline. Alternatively, microfilters can be used in recirculation/cross-flow operation. A recirculation loop is used that includes a reservoir tank, a recirculation pump, and the filter modules. The recirculation feature maintains a high velocity across the filter face to prolong on-stream time by avoiding accumulation of solids at the surface. A small portion of the recirculation flow is bled off to maintain a constant solids concentration as feed water is added. Thus, extended filter life is obtained, but with higher pumping costs.

Microfiltration has proven effective in treating N Reactor effluent during the LETF pilot study discussed in Section 3.2.4. Microfiltration was evaluated further because of the low levels of contact maintenance required, the expected particle size distribution, and the demonstrated effectiveness in removing radionuclides from the N Reactor effluent.

4.4.1.6 Ultrafiltration. Ultrafiltration is similar to microfiltration except that it addresses particles in a size range from 0.001 to 0.1 μm (10 to 1,000Å). There are similar design constraints on materials of construction. The membranes consist of a very thin skin supported on a spongy sublayer of membrane material. Like microfiltration, ultrafilters are usually operated in a recirculation cross-flow mode. The recirculation feature maintains velocity across the filter membranes to prolong on-stream time by avoiding solids accumulation at the membrane surfaces. This technology was eliminated from further consideration because the particle size distribution in the N Reactor wastewater is expected to range from 1.5 to 49 μm.

4.4.2 Organics Removal

4.4.2.1 Activated Carbon Adsorption. Activated carbon is used widely to adsorb organics contained in aqueous feed streams. Activated carbon is most effective when employed to adsorb relatively high-molecular-weight hydrocarbons that exhibit low solubility in aqueous solution. Activated carbon is not as effective in adsorbing some organics such as small halogenated hydrocarbons and acetone. The adsorption process, however, is relatively non-selective and is commonly used as a broad-spectrum treatment method. There are two forms of activated carbon, granulated and powdered, that can be used.

Granulated activated carbon (GAC) typically is used in flow-through columns, while powdered activated carbon (PAC) is used in well-mixed slurry reaction vessels. Some organics may exhibit a chromatographic effect after adsorption on GAC in which one adsorbed compound is displaced by another.

Activated carbon adsorption was retained for further consideration because of its broad-spectrum applicability and standard use in wastewater and hazardous waste treatment.

4.4.2.2 Biological Treatment. The use of biological processes is becoming more common in removing undesirable organics from wastewater streams. Specific organisms can be cultivated to target specific organic compounds. A given system often requires pH-adjustment, nutrient additions, and tight temperature control. The low carbon concentrations in the N Reactor effluent would require that substantial carbon sources be added to sustain a viable microbial population. In addition, biological treatment systems normally require prolonged startup periods until steady state treatment levels are achieved, and are sensitive to transients in both influent flow and concentration. These operating characteristics reduce the effectiveness and reliability of biological treatment units for systems with non-continuous or highly variable flows. Because of these considerations, biological treatment was eliminated from further consideration.

4.4.2.3 Supercritical Fluid Extraction. Supercritical fluid extraction is an emerging technology for removing organics from wastewater using fluids that possess unique physical characteristics. The fluid (typically carbon dioxide) is obtained by compressing a gas to its critical point where it begins to behave as a liquid with the capacity for dissolving large quantities of organics. However, the fluid continues to exhibit some gaseous properties, including the ability to extract organics at an extremely high rate compared with the rates normally observed for liquid-liquid extraction. This alternative was eliminated from further consideration because the technology is just emerging and cannot be considered to be commercially demonstrated for wastewater treatment. The high pressures required for this technology present additional safety concerns.

4.4.2.4 Air Stripping. Air stripping may be used to remove low concentrations of volatile materials from wastewater. Air stripping towers typically are operated with counter-current flow of the air and water. The effectiveness of stripping is a function of the Henry's Law constant for a given constituent. A material with a Henry's Law constant of greater than 0.003 atm m^3/mole generally can be treated economically by air stripping.

Some of the organics potentially present in the N Reactor effluent are readily treated by air stripping; additionally, air stripping is effective in removing ammonia from wastewaters. The exhaust air may require further treatment before atmospheric discharge. The usual emission treatment is thermal oxidation or activated carbon adsorption. Given the low level of volatile organic constituents expected in the N Reactor effluent, carbon adsorption would be more efficient than thermal oxidation; however, activated carbon adsorption is not effective for removing ammonia from process emissions.

Air stripping with thermal oxidation of the off-gases was retained for further consideration because it is a generally effective and widely used technique for ammonia treatment.

4.4.2.5 Ultraviolet-Light/Ozone/Peroxide Oxidation. Ultraviolet (UV)-catalyzed oxidation is an organic destruction process that utilizes the tendency of hydrocarbons to absorb light within the UV spectrum. The hydrocarbons are activated and become more susceptible to oxidation. The oxidant is typically provided in the form of ozone, hydrogen peroxide, or a mixture of the two. This process requires 1 to 30 min of residence time to effect near-complete oxidation. Residence time depends on contaminant type and concentration. Additionally, the energy input in the form of UV light required to enhance oxidation is strongly dependent upon contaminant type. Aromatic and other unsaturated hydrocarbons are more easily oxidized by this process than are saturated or halogenated organics. The equipment operates at room temperature and nominal pressure under continuous water flow conditions. UV/Ozone/Peroxide oxidation requires only monitoring of lamp activity/ cleanliness and oxidant flows. This technology was evaluated further because it results in the destruction of most organics and oxidizable species (such as hydrazine).

4.4.2.6 Pervaporation. Pervaporation is a membrane-based process that uses a vacuum to increase the membrane flux for organic wastewater constituents. The wastewater is directed across the upstream side of the membrane at ambient pressure and a slightly elevated temperature of 50 °C to 90 °C. The vapor-phase permeate is withdrawn by maintaining a slight vacuum on the downstream side of the membrane. Membranes are used that have a high selectivity for the organic compounds over water. Pervaporation was eliminated from further consideration because it cannot be considered a demonstrated process at this time.

4.4.3 Dissolved Solids Removal

4.4.3.1 Coagulation/Flocculation. Coagulation and flocculation can be used to enhance the removal of metals and particulates from wastewater. Coagulating agents act to neutralize charges and collapse colloidal particles causing them to agglomerate or flocculate and settle. Common coagulants include aluminum sulfate (alum), ferric chloride, and ferric sulfate. In addition to these inorganic materials, polyelectrolytes can be used to flocculate colloidal particles. Polyelectrolytes are polymers of large, water-soluble organic molecules that react with particles to form flocs. This process is a standard technique for removal of heavy metals from wastewater and was retained for further analysis.

4.4.3.2 Evaporation. Either solar evaporation ponds, sparged tanks, or evaporator/crystallizers may be used as a part of the treatment process.

Solar evaporation was not retained as a potential means of untreated effluent disposal or treatment, as solar evaporation ponds are not considered to be acceptable treatment for radioactive effluent streams. Because the total annual volume of the N Reactor effluent is comparatively small, solar evaporation may be an acceptable means of disposing of treated non-radioactive effluent.

Solar evaporation ponds would have to be double-lined and sized to accommodate the design wastewater flow rate. Based on the observed net evaporation rate of 94 cm (37 in.) of water per year at the Hanford Site and

an average treated effluent flow of 7.6 L/min, a minimum of 7,250 m^2 (42,775 ft^2) of active pond area would be required. The pond would need to be 2 m (6.6 ft) deep to ensure adequate capacity during seasonal periods of low evaporation and to include 0.61 m (2 ft) of freeboard. Providing a contingency pond to allow draining an active pond for leak repair would require, as a minimum, three ponds, each sized at 50 percent of the total capacity or about 1,987 m^2 (21,387 ft^2) each. As a result, the minimum total pond area would be about 5,960 m^2 (64,160 ft^2). Construction of double-lined evaporation ponds of this size would cost approximately $190,000, assuming a construction cost of about $32/$m^2$ ($3/$ft^2$).

Treated effluent also may be evaporated through contact with dehumidified air in a sparged tank or a spray humidification system. This evaporation alternative was retained for consideration because treatment equipment of this type may currently be available at N Reactor.

Evaporation also may be accomplished by heating the wastewater in a closed system. This option commonly is used to reduce the volume of radioactive effluents; it also is effective in removing suspended and dissolved solids. Evaporators of this type use elevated temperature and/or reduced pressure to evaporate water. Various methods can be used to provide the heat. Steam can be used directly or indirectly through heating coils. The mechanical vapor recompression (MVR) evaporator is a thermally efficient design in which a compressor is used to compress the evaporated vapor and pass it through a heat exchanger in order to transfer energy to the incoming water. The use of the compressor results in a high thermal efficiency and nearly eliminates the need for any energy input other than the compressor power after start-up. Mechanical vapor recompression evaporation was retained for primary wastewater treatment.

4.4.3.3 Vacuum-Freezing Multiple-Phase Transformation. Vacuum-freezing is a separation technique that utilizes freezing point differences and the unique properties of ice to remove organics and dissolved solids from water.

Partial freezing of wastewater produces a solid fraction consisting of pure ice. The remaining liquid contains the original impurities, but in a concentrated form. The ice crystals are removed and melted into relatively pure water (plus whatever brine adheres to the surface of the crystals after washing the ice) using the heat of condensation of the vapors produced in the initial vaporization step.

In a primary refrigerant mode, cold wastewater containing contaminants of low volatility is sprayed into a vacuum chamber at a pressure slightly below the vapor pressure of water at its freezing point so that simultaneous vaporization and freezing of the water occurs in an adiabatic (constant total heat content) mode. A sub-triple-point vapor and a slurry containing ice (water) crystals and a concentrated brine results. The low pressure flash freezes the feed water, and the heat of vaporization removed from the water causes ice crystals to form. About one-half of the feed water is frozen.

The resulting mixture is transferred to the bottom of a separation column. The ice floats to the top of the column, and the brine is drawn off the side at selected points. Vapor leaving the freezer is condensed in an

auxiliary refrigeration system and is admitted to the top of the separation column to wash brine from the ice crystals.

Vacuum freezing was eliminated from further consideration as both a primary treatment method and a method for secondary waste concentration because of the complexity of this technology, and lack of demonstrated experience in concentrating similar waste streams.

4.4.3.4 Chemical Precipitation. Dissolved solids can be removed from solution by adding a chemical agent that reduces the solubility of the target constituent and causes a precipitate to form. Chemical precipitation is a common method for removing metals from wastewaters. Removal of dissolved metals usually involves adjusting the solution within a range of pH 8 to pH 11 to form insoluble hydroxides. Typical additives include sodium hydroxide, magnesium hydroxide, and hydrated lime. Many metals also can be precipitated using sodium sulfide or sodium bisulfide.

The precipitated solids typically are removed by sedimentation and filtration. Various coagulants and flocculants often are added to assist in forming large, dense particles that settle rapidly and are easily filterable.

There are many variations of precipitation processes that can be used to target specific constituents. One variation is a co-precipitation process. Co-precipitation can be accomplished by adjusting the solution pH between 2 and 4 to make a ferrous sulfate additive soluble. The ferrous sulfate is added and the mixture is agitated. The pH is readjusted through addition of hydrated lime ($Ca(OH)_2$) or sodium hydroxide. Iron then precipitates as an oxyhydroxide (FeOOH). Some contaminants are adsorbed on the FeOOH, some co-precipitate with the oxyhydroxide, and some precipitate as hydroxides. Microfiltration or clarification can be used to separate the resulting solids. There also are precipitation processes that combine sulfide precipitation in a basic (pH10) solution with microfiltration using filter media with ion-exchange properties, that may prove effective for this wastewater stream.

Chemical precipitation was retained for further consideration because it is a widely practiced and accepted process for removal of metals from aqueous waste.

4.4.3.5 Ion Exchange. Ion exchange (IX) removes ions from an aqueous phase by displacing complementary ions from exchange sites located on the surface of an insoluble support material. The support materials typically are synthetic organic resins. The complementary ions are composed of specific functional groups that are selectively displaced by ions in the solution. In cation resins, the exchange sites usually contain hydrogen ions but also may be designed and operated to contain sodium or ammonium ions. In anion resins, the exchange sites usually contain hydroxide ions, but other ions, such as chloride, can be used. Specialized IX resins also can be effective in removing certain organic compounds.

Upon depletion of the available complementary ions, the resins are either removed for disposal and replaced with fresh resin or they are regenerated. Regeneration involves displacing contaminant ions with fresh, complementary ions to restore the exchange capacity of the resin. In conventional applications, cation or anion resins typically are regenerated by washing with

sulfuric acid or sodium hydroxide solutions, respectively. Conventional regeneration usually generates secondary waste volumes up to 5 percent of the original flow rate.

Prerequisites for using IX may include pre-treatment to remove suspended solids and organics. Both of those contaminants can mask the exchange sites, resulting in loss of exchange efficiency, and plug the resin bed, resulting in restricted flow through the unit.

IX was retained for further evaluation because ion exchange is a standard water treatment technology for both radionuclides and more conventional toxic pollutants, and may be effective in removing dissolved solids from the N Reactor effluent. Additionally, disposal of the resin bed versus regeneration may be a potential option, reducing the amount of secondary wastes generated.

4.4.3.6 Reverse Osmosis. Reverse osmosis (RO) is a physical unit process that removes dissolved constituents from an aqueous solution and concentrates them. The process involves filtering the contaminated solution through a semi-permeable membrane at a pressure greater than the osmotic pressure exerted by the dissolved constituents in the wastewater. Relatively pure water passes through the membrane while most of the impurities do not.

An RO unit produces two streams from the original feed stream. The first is permeate that consists of relatively pure water. The second is concentrate that contains impurities that did not pass through the membrane. To achieve enhanced concentration of the removed contaminants, applications may employ two or more RO stages operating in series. In such applications, the permeate streams are combined for discharge while the feed stream to each of the latter stages consists of concentrate produced in the previous stage. In a given RO stage, the fraction of the total feed water appearing in the permeate stream primarily is a function of the operating pressure upstream of the membrane that, in turn, is established by the design criteria for the desired level of contaminant removal.

Either several stages of reverse osmosis in series or multiple passes through a single stage in a semi-batch process could be applied to enhance the removal of dissolved solids from the N Reactor effluent. Colloidal and organic matter tend to foul RO membrane surfaces, causing significant deterioration in the rate of water throughput. Therefore, RO may require pre-treatment steps, including filtration and organic removal. Secondary waste volumes typically range from 10 to 20 percent of the original flow rate. Even with the prerequisites for pre-treatment and large volumes of secondary waste, RO appeared to be a viable alternative for removing contaminants from the N Reactor effluent and was retained for further evaluation.

4.4.3.7 Electrodialysis. Ion exchange membranes in a direct-current electrical field are used in electrodialysis to separate ionic species in a fluid. In comparison to RO, electrodialysis can result in reject streams that are significantly more concentrated. However, leakage to the permeate is greater with electrodialysis, resulting in a "dirtier" product stream. Electrodialysis was not evaluated further because it does not offer significant advantages over RO in this application.

4.4.3.8 Alumina Adsorption. Activated alumina is used to adsorb ions from the wastewater as it passes through a packed column. The alumina can be regenerated by rinsing with basic and acidic solutions such as sodium hydroxide and nitric acid, respectively. Anions of arsenic often are adsorbed using activated alumina. Activated alumina was not considered further because there are other broader-spectrum separation methods available for treating N Reactor wastewater.

4.4.3.9 Algae Adsorption. Dried algae can be formed into beads for use as a chemical sorbent. Sorbed species are removed by adjusting the solution pH. This medium has been shown to be quite effective for sorbing certain heavy metals, including uranium. Its applications involve concentrating weak solutions of specific metal ions to facilitate further processing of the solution. Careful control of pH during sorption is required. Algae adsorption was eliminated from further consideration because its treatment functions are achieved by other, more-proven technologies.

4.4.3.10 Supported Liquid Membrane. Supported liquid membrane (SLM) is an emerging technology with the potential for removing and concentrating dilute contaminants from an aqueous feed stream. An SLM consists of an organic extractant held by capillary forces within the pores of a microporous membrane. The feed solution is flushed across one side of the membrane. The organic solvent extracts solute from the feed. Concurrently, a stripping solution is flushed across the other side of the membrane to remove the solute from the organic solvent.

Applied to the N Reactor wastewater, a SLM unit would be configured with multiple types of membranes in series to effectively remove both cations and anions. The process would be expected to generate a relatively small volume of secondary waste comprised of a flushing solution carrying the removed impurities. Filtration and organic removal are necessary pre-treatment steps to avoid plugging or blinding the membranes. The technology was eliminated from further consideration because it cannot be considered commercially demonstrated at this time.

4.4.4 Radionuclides

Radionuclides, with the exception of tritium, are present in the N Reactor effluent primarily as dissolved or suspended solids. Therefore, technologies that effectively remove suspended and dissolved particles are effective for the treatment of most of the radionuclides present in the N Reactor effluent.

No demonstrated, cost effective technology currently exists to remove tritium from the N Reactor effluent. Therefore, source controls or zero-discharge are the only effective means of reducing tritium levels in the N Reactor wastewater.

4.5 SCREENING SUMMARY

Table 4-2 identifies the alternative treatment technologies retained for further evaluation or eliminated from consideration.

Table 4-2. Results of Screening N Reactor Wastewater Treatment Technologies.

Treatment technology	Initial screening result	
	Eliminated	Retained
No Action	•	
Source Treatments		
Source Control		•
Zero Discharge	•	
End-of-Pipe Treatments		
Suspended solids removal		
Sedimentation/clarification		•
Bag filtration	•	
Deep bed filtration	•	
Cartridge filtration	•	
Microfiltration		•
Ultrafiltration	•	
Organics removal		
Activated carbon adsorption		•
Biological treatment	•	
Supercritical fluid extraction	•	
Air stripping and thermal oxidation		•
UV/ozone/peroxide oxidation		•
Pervaporation	•	
Dissolved solids removal		
Coagulation/flocculation		•
Evaporation		•
Vacuum freezing	•	
Chemical precipitation		•
Ion exchange		•
Reverse osmosis		•
Electrodialysis	•	
Alumina adsorption	•	
Algae adsorption	•	
Supported liquid membrane	•	

4.6 CANDIDATE TREATMENT SYSTEMS

The selected technologies were combined into five candidate treatment systems for further evaluation and comparison. Each of the candidate systems addresses the four categories of constituents of concern (suspended solids, organics, dissolved solids, radionuclides) in the N Reactor effluent. None of the candidate systems completely satisfies the general criteria for effectiveness because no effective wastewater treatment is currently available for tritium.

The five candidate treatment systems are presented in this section. Included are diagrams of each process train and a brief description of how the system removes constituents of concern. In Section 5 of this report, the candidate systems are examined in more detail. Section 4.7 introduces options for disposing of treated N Reactor effluent, and Section 4.8 discusses secondary waste treatment and handling. These options also are examined further in Section 5.

For each treatment system, a design flow rate of 95 L/min (25 gpm) was assumed to accommodate the desired flow rate for draining the fuel basins. Under current conditions, the N Reactor effluent flow rate is less than 7.6 L/min (2 gpm). Therefore, all treatment systems will operate in a campaign-mode, with wastewater accumulating in a 56,000 L (15,000 gal) head tank until sufficient volume has been collected to effectively operate the treatment system. Each treatment system also incorporates two 56,000 L holding tanks to allow treated effluents to be collected and sampled prior to release to the environment.

4.6.1 Alternative 1

Alternative 1 is comprised of four treatment unit operations: filtration, evaporation, GAC adsorption, and IX. The process train, including ancillary equipment, is sketched in Figure 4-1.

Each of the major treatment components removes some contaminants of concern: filtration removes suspended solids; evaporation, using a brine concentrating mechanical vapor recompression (MVR) evaporator, removes dissolved solids; the GAC adsorption unit removes organic compounds; and the IX system removes dissolved ions. Secondary wastes produced by this process include filtered solids, slurry concentrate from evaporation, spent carbon, and spent IX resin. All secondary wastes will require proper disposal.

4.6.2 Alternative 2

Alternative 2 is comprised of three treatment unit operations: flocculation and settling, sodium sulfide precipitation and filtration, and air stripping. The process sketched in Figure 4-2.

In this alternative, flocculation and settling will be used to remove suspended and some dissolved solids and radionuclides. Sodium sulfide precipitation in a basic environment followed by filtration will be used to

Figure 4-1. Diagram of Alternative 1 Process Train.

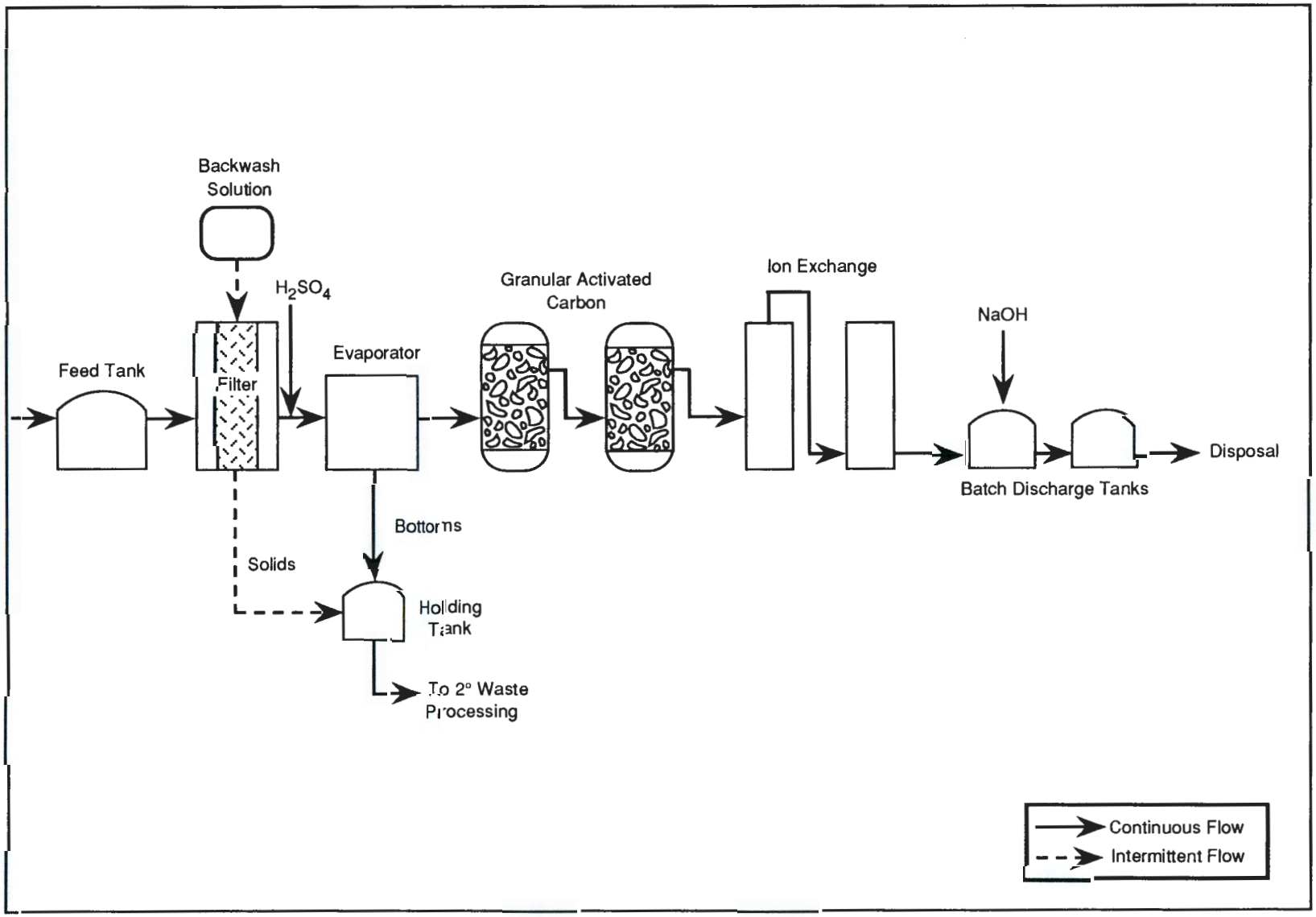

Figure 4-2. Diagram of Alternative 2 Process Train.

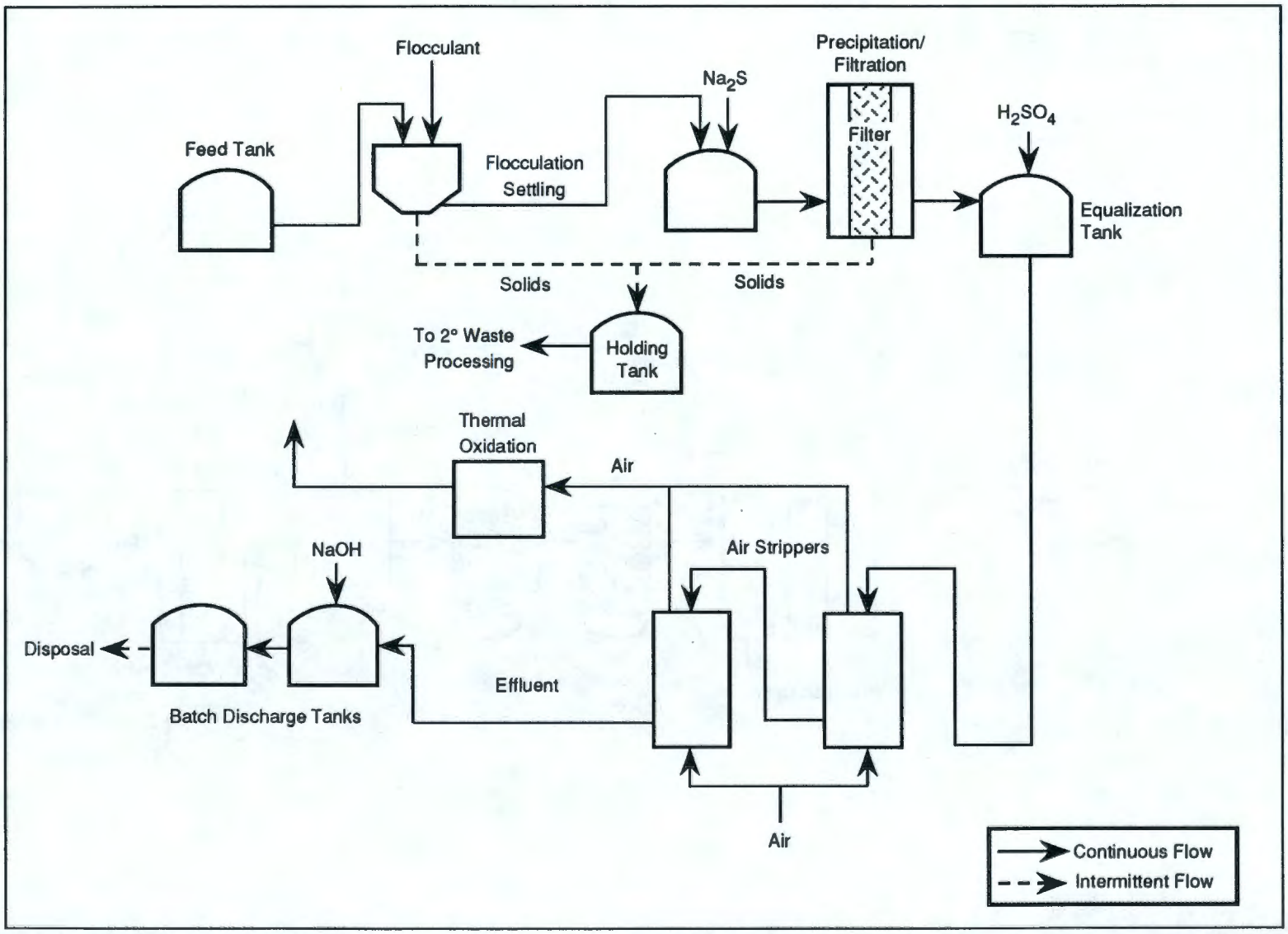

remove the remaining dissolved solids and radionuclides. Air stripping will be used to remove volatile organics, ammonia, and residual sulfides as hydrogen sulfide. Off-gases from the air stripper will be thermally oxidized before release to the environment.

4.6.3 Alternative 3

Alternative 3 consists of filtration, RO, evaporation, and GAC. The process is similar to that of Alternative 1, but uses a RO unit to remove dissolved ions. The unit processes of Alternative 3 also are arranged differently from Alternative 1; concentrate from the RO unit is routed to the evaporator. Overheads from the evaporator are combined with the RO permeate and treated by carbon adsorption. Figure 4-3 outlines the Alternative 3 process train diagram.

4.6.4 Alternative 4

Alternative 4 is similar to Alternative 1. Filtration, evaporation, and IX are used to remove radionuclides, and suspended and dissolved solids. The difference between these two alternatives lies in the organic treatment process; Alternative 4 substitutes UV/hydrogen peroxide oxidation for GAC adsorption. Figure 4-4 outlines the Alternative 4 process train diagram.

4.6.5 Alternative 5

Alternative 5 is similar to Alternative 1. Filtration, GAC adsorption, and IX are used to remove radionuclides, organics, and suspended and dissolved solids. The difference between Alternatives 1 and 5 is that Alternative 1 utilizes an evaporator for dissolved solids removal, while Alternative 5 relies upon additional stages of IX to accomplish an equivalent level of treatment. Dissolved solids loadings to the IX columns will be relatively high in Alternative 5 as compared to Alternative 1; therefore Alternative 5 requires larger IX columns than Alternative 1. Resin changeouts will be more frequent with Alternative 5 than with Alternative 1. Figure 4-5 is a diagram of the Alternative 5 process train.

4.7 CANDIDATE TREATED EFFLUENT DISPOSAL METHODS

Two methods for treated effluent disposal were identified. These alternatives are to discharge treated N Reactor effluent to the Columbia River, or discharge treated effluent to an onsite evaporation tank. Each of these options is evaluated in further detail in Section 5.

4.7.1 Discharge to the Columbia River

In this method, treated effluent would be discharged to the Columbia River. The N Reactor outfall currently permitted under the NPDES program could be used for this discharge.

Figure 4-3. Diagram of Alternative 3 Process Train.

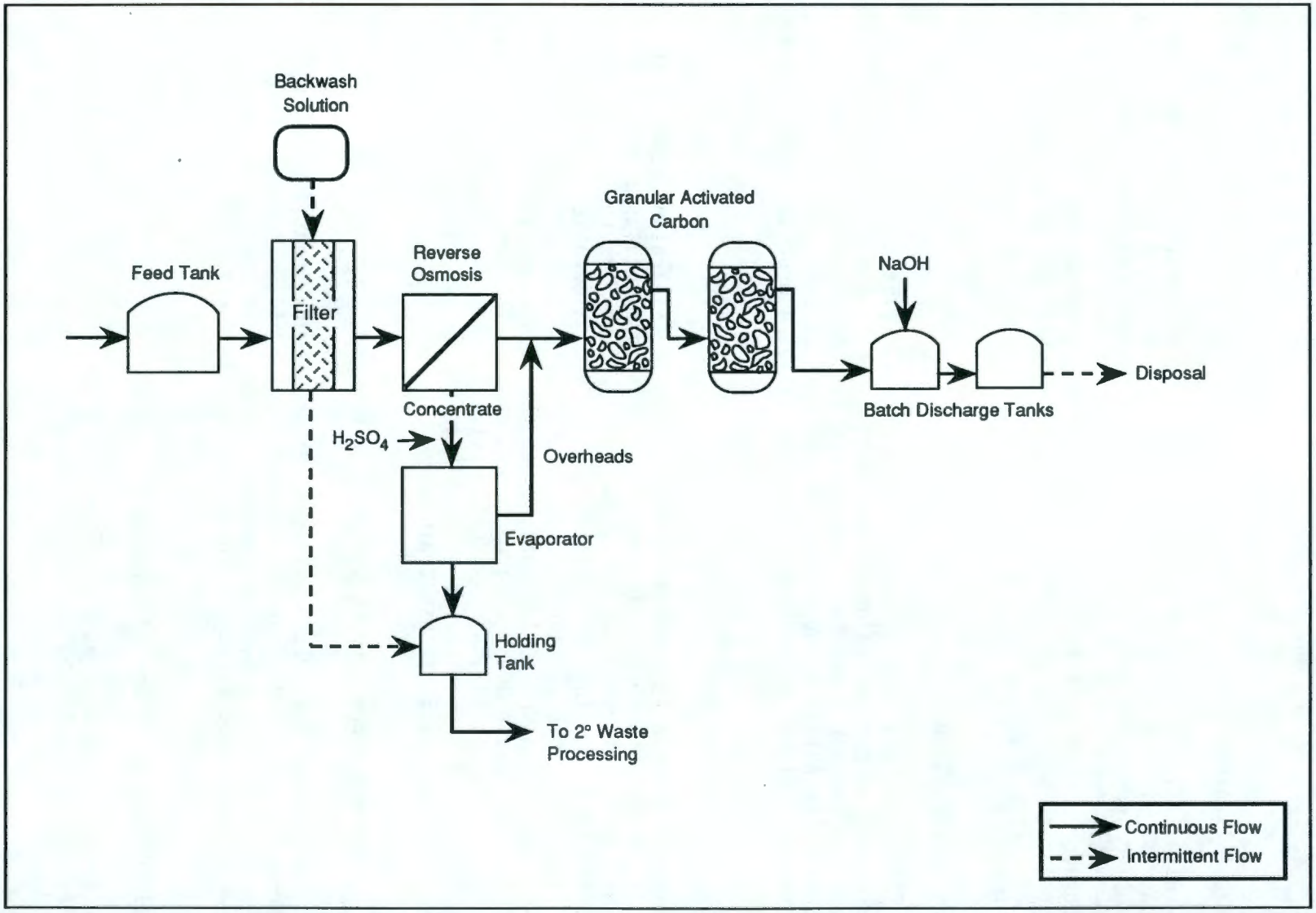

Figure 4-4. Diagram of Alternative 4 Process Train.

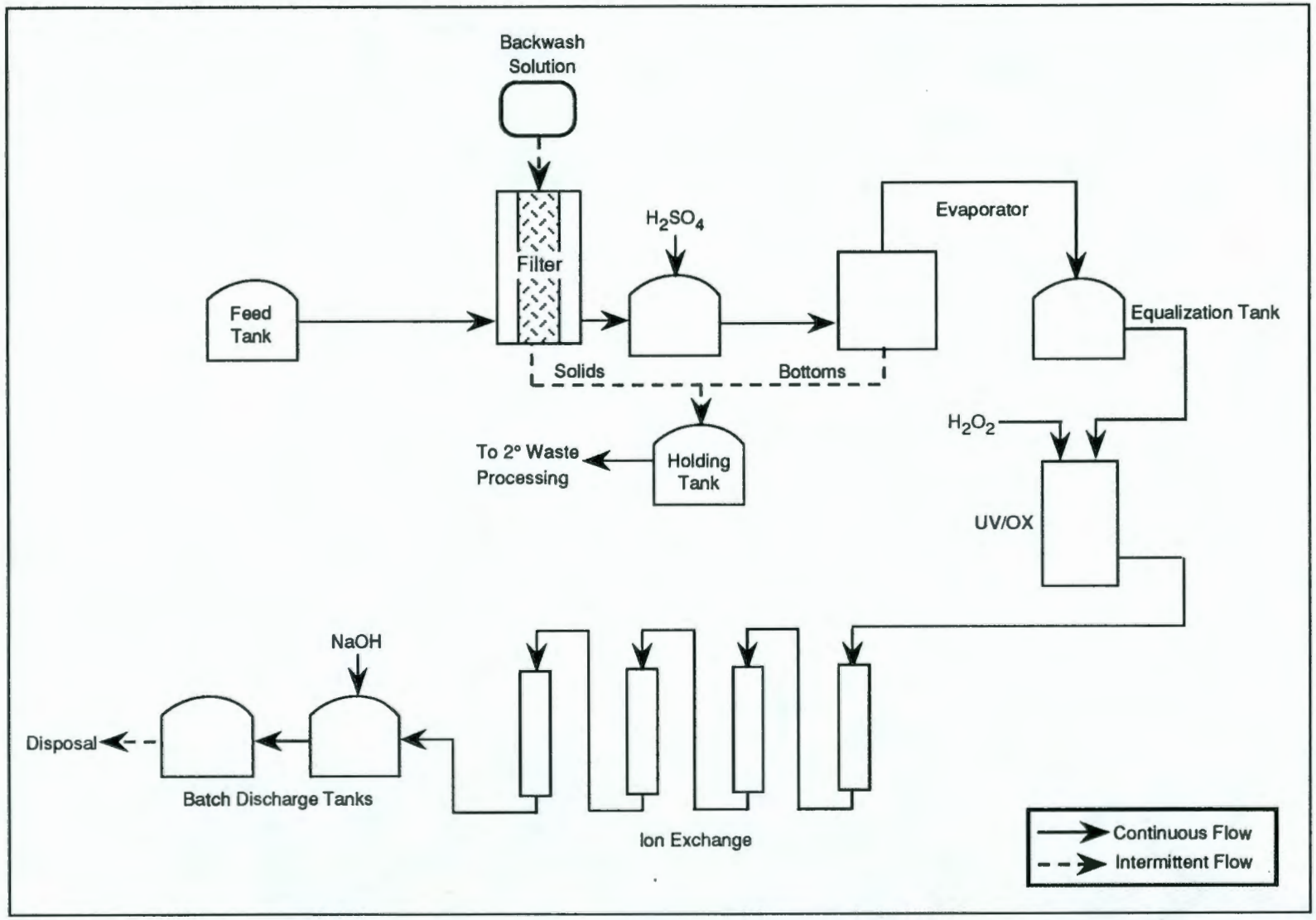

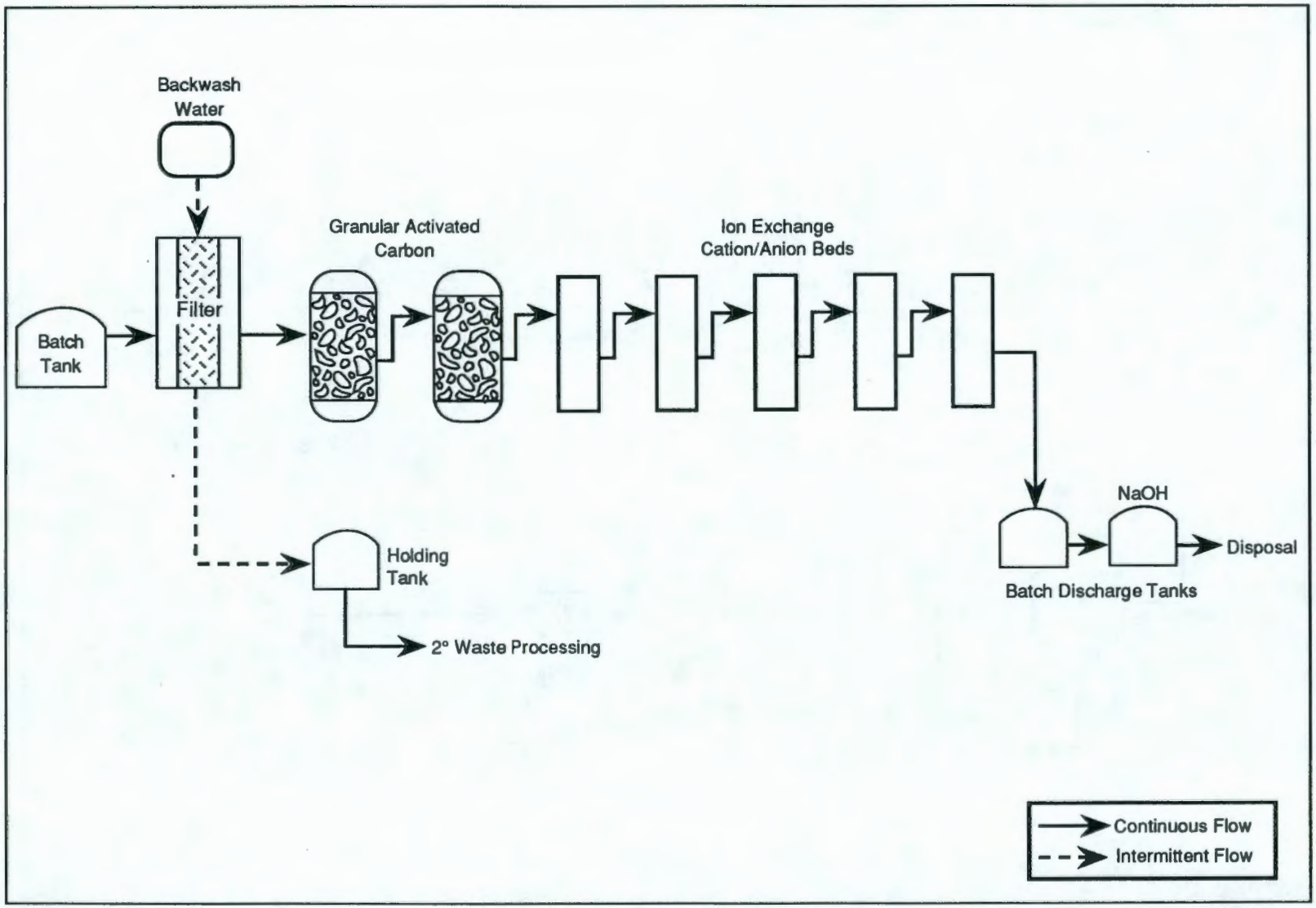

Figure 4-5. Diagram of Alternative 5 Process Train.

4.7.2 Onsite Evaporation

A second method for disposing of treated N Reactor effluent would involve discharging the effluent to an existing tank at the N Reactor. Dehumidified air would be used to enhance evaporation from the tank. Since no discharges to the Columbia River or ground would occur, this treatment would not require a permit under the NPDES or SWDP programs and would be less able to accommodate fluctuations in effluent discharge volumes. Permits under state and federal air pollution control regulations would be required.

4.8 SECONDARY WASTE TREATMENT OPTIONS

Two options were identified for the handling of secondary wastes from the N Reactor effluent treatment process. These options included onsite stabilization and solidification, followed by shipment to other Hanford Site waste management units for disposal, or shipment of unstabilized liquid wastes to the 200 Area for storage and disposal.

4.8.1 Onsite Stabilization

In this option, secondary wastes from the N Reactor wastewater treatment process would be stabilized at N Reactor by incorporating them into hydraulic cement. Solidified wastes would be packaged into 208 L (55 gal) drums and shipped to the 200 West Area Central Waste Complex for eventual disposal. Based upon the constituents present in the untreated effluent, the solidified wastes are assumed to be mixed wastes.

4.8.2 Liquid Secondary Waste Disposal

This option involves collecting secondary waste slurries in existing tanks at the N Reactor. These liquid wastes would then be loaded into rail cars and shipped to the 200 Area for storage, treatment and disposal through the DSTs. As in the onsite stabilization option, the liquid wastes are assumed to be mixed wastes.

This page intentionally left blank.

5.0 DESCRIPTION OF CANDIDATE TREATMENT AND DISPOSAL SYSTEMS

The five candidate wastewater treatment systems are described in detail in this section. The treated effluent disposal methods also are discussed. Seven parallel sections describe each process, and discuss the following three elements of each:

- Effectiveness
- Implementability
- Cost.

These elements will form the basis for comparing the treatment alternatives in Section 6, and selecting two alternatives as preferred options.

To estimate treatment effectiveness and system performance, several sources of data on the unit operations under evaluation have been used. These sources of data include average treatment efficiencies reported by the EPA (EPA 1990), and information supplied by vendors. Radionuclide treatability tests on the N Reactor effluent conducted in the LETF pilot plant have been used where appropriate (UNC 1986a, 1986b, 1986c, 1987a, 1987b). Average DFs for radionuclides published in nuclear industry standards also have been used (ANSI/ANS 1979).

In some cases, engineering judgement has been used to apply treatability data for similar compounds to compounds for which no data exists. In all instances, this information should be considered an estimate of system performance; actual performance and details such as treatment chemical dosages may vary from the assumptions presented below and should be verified before proceeding with detailed process design.

All costs are provided in constant FY 1992 dollars. Cost estimates presented in this report were developed specifically for the comparison of treatment alternatives, and are not to be construed as total project costs for budgetary purposes. A ten year facility operating life and 7 percent time value for money also were assumed.

Because of the similarity of some of the processes, the discussion of alternatives is in some cases limited to the differences between the alternatives.

5.1 ALTERNATIVE 1

5.1.1 Process Description

Alternative 1 consists of filtration, evaporation, GAC adsorption, and IX. Ancillary unit operations include an equalization tank preceding the filter, intermediate holding tanks, treated effluent holding tanks, and a

holding tank for concentrated secondary wastes. The process diagram is provided in Figure 4-1.

A holding tank precedes the treatment system. One purpose of this tank is to provide operating flexibility. For example, the tank may continue to fill while the treatment process is shut down for servicing. The tank also equalizes the flow of the entering waste stream, providing a more consistent composition and flow rate to the treatment equipment. The tank is approximately 56,000 L (15,000 gal) in size, constructed of stainless steel, and equipped with an agitator to ensure feed is well mixed. The feed tank has been sized to accumulate up to 5 days of wastewater at a generation rate of 7.6 L/min (2 gpm). At a processing rate of 95 L/min (25 gpm), a full feed tank can be processed in approximately 10 h.

A filter is the first treatment component. The purpose of the filter is to remove particles 1 μm and larger. In addition to removing the particles, the filter also may remove some of the heavy metals that are adsorbed to the particles. There are several viable options for filters in this application. One option is a tubular filter element constructed of sintered ceramic or metal particles. These filters capture solids on their exterior while allowing water and dissolved matter to pass through. This type of filter can be backflushed in place to avoid producing waste filters typical of conventional cartridge filtration.

To enhance solids removal, both a precoat and body feed will be used. Before filtering any N Reactor effluent, a slurry of filter aid (such as diatomaceous earth) in clean water will be run through the filter, building up a porous cake that enhances the performance of the filter element. Approximately 0.5 to 1.0 kg/m^2 (0.1 to 0.2 lb/ft^2) of precoat per unit of filter area will be used. This precoat also will be applied to the filter element after each filter backflush.

Filter aid also will be added to the incoming N Reactor effluent stream to enhance filtration. This "body feed" will be used at a concentration of 2 to 10 ppm filter aid in the effluent flowing to the filter.

The filter is backflushed regularly to remove solids that collect on the filter elements. The backflushing will be automatic, based on measured pressure drops across the filter. Based on a waste stream flow of 3.97×10^6 L/yr (1.05×10^6 gal/yr) with a maximum flow rate of 95 L/min (25 gpm), the assumed stream constituents, LETF pilot test data and vendor information, a microfilter with an area of 5.4 m^2 (58.2 ft^2) will need to be backflushed every 28 days or about 13 times a year.

Evaporation is the second treatment unit. A vertical tube, falling film MVR evaporator is used to remove dissolved solids from the filtered wastewater. The evaporator bottoms will have a total solids concentration of approximately 5 percent. The evaporator uses a seed slurry to help control scale deposits, which are prevalent due to the high proportion of calcium and sulfate ions present in the effluent. Scale deposits form on the seed slurry instead of the heat transfer surfaces and exit the evaporator with the waste slurry. Sulfuric acid also is added to the influent to the evaporator to help reduce scaling by lowering the pH to about 5.5. This converts the

bicarbonates to CO_2, which is then stripped from solution by the evaporator deaerator.

The evaporator is designed for a 95 L/min (25 gpm) flow rate and can operate at a turndown rate of 50 percent of the designed flow rate. At the design flow rate, waste slurry will be produced at a rate of 27.5 kg/hr (12.5 lb/hr) with a solids concentration of 5 percent by weight. This evaporator requires 182 kg/hr (400 lb/hr) steam from an outside source, such as a steam boiler, for up to 24 hours during startup.

Distillate from the evaporator is pumped through GAC canisters to remove organic compounds. Two canisters are used in series. For this alternative pressure-flow canisters 1.2 m (3.8 ft) in diameter and 1.7 m (5.5 ft) high packed with 480 kg (1056 lb) of GAC each were assumed. Water quality is monitored at the discharge from each vessel to detect "breakthrough" of the target compounds. When breakthrough occurs in the first vessel, the GAC is removed hydraulically and replaced with fresh GAC. The flow is then switched to direct water through the second vessel first and the vessel with the fresh GAC second. This alternation is continued throughout the operation. Based on the stream flow, stream constituents, and vendor information, each canister will need to be replaced every 5 months, spending 2.5 months each as the first and second in the series. Approximately five 480 kg (1056 lbs) canisters of GAC will be needed per year. Because of radioactive contamination, the spent GAC will be disposed of as secondary mixed waste rather than regenerated.

Ion exchange is the final treatment step. Two sets of IX columns are used in series, each with a cation and an anion exchange bed. Each IX column holds 0.34 m^3 (12 ft^3) of resin. Conductivity and radioactivity typically are used to measure breakthrough of an operating column. When the resins are spent they will be disposed of as secondary mixed waste. Based on the design waste stream flow, stream constituents, and vendor information the useful life of the resin should be about 10 years.

The treated water is discharged into one of two 56,775 L (15,000 gal) stainless steel holding tanks. At this point, the effluent pH is adjusted using a sodium hydroxide solution. Sampling is conducted to verify the quality of the effluent water. Once they have been sampled, the tanks will be drained to the Columbia River or to an onsite evaporation system. Averaging the 3,975,000 L/yr (1,050,000 gal/yr) stream output to 7.6 L/min (2 gpm), the holding time for the two tanks is 10 days, allowing time for effluent sampling before discharge. For the maximum design flow of 95 L/min (25 gpm), the two tanks will fill in 20 hours.

5.1.2 Effectiveness

The predicted effluent quality is tabulated in Table 5-1. The first column lists the specific compound or water quality parameter of interest. The second column lists the influent concentrations for those parameters. The next series of columns list the DFs associated with the treatment unit operations. For volatile species removals in the evaporator, the relative volatility (alpha) assumed is provided in Table 5-1. The relative volatility is defined as the concentration in the overheads divided by the concentration

Table 5-1. Predicted Effluent Quality for Alternative 1. (sheet 1 of 3)

Constituents	Influent concentration (ug/L)	Removal efficiencies						Effluent concentration (ug/L)	Comparative levels		Toxic mass removed (lb/yr)**
		F (%R)	E (DF)	GAC (%R)	IX(A) (DF)	IX(B) (DF)	Overall (DF)		Chronic (ug/L)	Acute (ug/L)	
Inorganics											
Ammonia	2,230	0	100	0	100	10	1.00E+05	2.23E-02	16.66	128.18	6.55E+00
Arsenic	130.8	10	1,000	0	100	10	1.11E+06	1.17E-04	0.018		3.56E+02
Barium	41.4	20	1,000	0	100	10	1.25E+06	3.30E-05			2.03E-03
Boron	83.4	10	1,000	0	100	10	1.11E+06	7.50E-05			
Cadmium	20	20	1,000	23	100	10	1.62E+06	1.20E-05	0.76		1.39E+00
Calcium	16,700	0	1,000	0	100	10	1.00E+06	1.67E-02			
Chloride	12,500	0	1,000	0	100	10	1.00E+06	1.25E-02	230	860	2.66E+00
Chromium (VI)	60.8	80.4	1,000	30	100	10	7.29E+06	8.00E-06	11	16	3.79E-01
Fluoride	204	0	1,000	0	100	10	1.00E+06	2.04E-04			
Iron	2,960	94.2	1,000	33	100	10	2.57E+07	1.15E-04	300		6.29E-01
Lead	389.4	63	1,000	4	100	10	2.82E+06	1.38E-04	1.66		1.18E+01
Magnesium	4,330	0	1,000	0	100	10	1.00E+06	4.33E-03			
Manganese	86.9	66.2	1,000	1	100	10	2.99E+06	2.90E-05	50		8.51E-02
Nitrate	438	0	1,000	0	100	10	1.00E+06	4.38E-04			2.14E-03
Potassium	679	13	1,000	0	100	10	1.15E+06	5.90E-04			
Selenium	420.8	0	1,000	33	100	10	1.49E+06	2.81E-04	5	20	6.18E+00
Silicon	2,040	90	1,000	0	100	10	1.00E+07	2.04E-04			
Silver	4.9	14	1,000	22	100	10	1.49E+06	3.00E-06	0.12		2.01E-01
Sodium	2,030	0	1,000	0	100	10	8.83E+00	2.30E+02			
Strontium	87.3	5.8	1,000	0	100	10	1.06E+06	8.20E-05			
Sulfate	12,100	0	1,000	0	100	10	8.26E+04	1.47E-01			

Table 5-1. Predicted Effluent Quality for Alternative 1. (sheet 2 of 3)

Constituents	Influent concentration (ug/L)	Removal efficiencies						Effluent concentration (ug/L)	Comparative levels		Toxic mass removed (lb/yr)**
		F (%R)	E (DF)	GAC (%R)	IX(A) (DF)	IX(B) (DF)	Overall (DF)		Chronic (ug/L)	Acute (ug/L)	
Uranium	2.84	90	1,000	0	100	10	1.00E+07	1.00E-07			
Zinc	121	55.5	1,000	0	100	10	2.25E+06	5.30E-05	0.66	0.6	8.97E+00
Organics	(Alpha)										
Acetone	173	25	4.08	0	1	1	1.31E+00	1.32E+02*	50		
1-butanol	3.62	0	0.49	99	1	1	1.02E+02	3.55E-02			
2-butanone	291	0	1.83	99	1	1	9.91E+01	2.94E+00	50		
BHT	13.5	0	0.003	99	1	1	7.65E+02	1.77E-02			
Hydrazine	312	0	0.65	99	1	1	1.01E+02	3.09E+00*	0.01		
Hexone (MIBK)	103	35	0.51	99	1	1	1.57E+02	6.57E-01	50		
Toluene	5.36	0	0.72	99	1	1	1.01E+02	5.32E-02			1.82E-05
Trichloromethane	51.9	3	3.08	99	1	1	1.02E+02	5.10E-01*	0.19		1.33E+01
Radionuclides	(pCi/L)		(DF)					(pCi/L)	(pCi/L)		
Am-241	70.3	90	1,000	5	100	10	1.05E+07	6.00E-06	1.2		2.87E+00
Cm-242	0.493	90	1,000	5	100	10	1.05E+07	4.70E-08			6.03E-04
Cm-244	0.892	90	1,000	5	100	10	1.05E+07	1.00E-07			1.82E-02
Co-60	7,000	86.5	1,000	2	100	10	9.26E+06	7.56E-03	200		1.71E+00
Cs-134	1,670	13	1,000	5	10	10	1.21E+05	1.38E-02	80		1.02E+00
Cs-137	471,000	13	1,000	5	10	10	1.21E+05	3.89E+00	200		2.25E+02
C-14	42.4	0	1,000	5	1	1	1.05E+03	4.03E-02			7.41E-04
H-3	5,544,000	0	1	0	1	1	1.00E+00	5.54E+06*	20,000		0.00E+00
Mn-54	6,040	66.2	1,000	5	100	10	3.11E+06	1.94E-03	1,000		2.96E-01

Table 5-1. Predicted Effluent Quality for Alternative 1. (sheet 3 of 3)

Constituents	Influent concentration (ug/L)	Removal efficiencies						Effluent concentration (ug/L)	Comparative levels		Toxic mass removed (lb/yr)**
		F (%R)	E (DF)	GAC (%R)	IX(A) (DF)	IX(B) (DF)	Overall (DF)		Chronic (ug/L)	Acute (ug/L)	
Pb-210	29.7	63	1,000	5	100	10	2.84E+06	1.01E-05	1		1.45E+00
Pu-238	10.9	90	1,000	5	100	10	1.05E+07	1.00E-06	1.6		3.33E-01
Pu-239/240	66.6	90	1,000	5	100	10	1.05E+07	6.00E-06	1.2		2.72E+00
Radium	0.33	90	1,000	5	100	10	1.05E+07	3.00E-08	0.3		5.39E-02
Ru-106	17,200	41.1	1,000	10	100	10	1.89E+06	9.12E-03	100		8.43E+00
Sr-90	1,760,000	5.8	1,000	5	100	10	1.12E+06	1.58E+00	3		2.87E+04
U-234	1.6	90	1,000	5	100	10	1.05E+07	1.00E-07			3.92E-03
U-235	0.217	90	1,000	5	100	10	1.05E+07	1.00E-07			4.43E-04
U-238	1.13	90	1,000	5	100	10	1.05E+07	1.00E-07			2.31E-03
TOTAL TOXIC MASS REMOVED											2.94E+04

Toxic mass removed per year is based on the design stream flow of 3,974,250 L/yr (1,050,000 gal/yr).
Organic DFs for Evaporation are based on relative volatility factors (1/alpha).
Comparative Levels are as previously presented in Table 3-1.
Sodium and sulfate concentrations in the treated effluent are effected by chemical additions during processing.

*Constituent does not meet effluent quality criteria in treated effluent.
**Calculated as described in Section 3.2.5.

%R = % Removal (concentration based).
DF = Decontamination factor.
E = Evaporation.
F = Filtration.
GAC = GAC adsorption.
IX(A) = 1st Series of Cation/Anion Exchange.
IX(B) = 2nd Series of Cation/Anion Exchange.

in the evaporator bottoms. The last columns list the final effluent concentration, comparative effluent levels, and the toxic equivalent mass removed by the treatment process. A total of 13,355 toxic equivalent kg/yr (29,381 lb/yr) are removed by Alternative 1.

There are a number of generalizations that can be made regarding the treatment effectiveness of Alternative 1. Several organic compounds are reduced to less than 5 percent of their original concentration through the use of GAC adsorption. However, some organics still exceed effluent limits, such as acetone, hydrazine and trichloromethane. Acetone cannot be removed by GAC in the aqueous phase and thus has a DF of only 1.3 for the entire process train. Heavy metal ions and other inorganic compounds are removed by filtration, ion exchange, and evaporation, to levels less than 0.7 percent of their influent concentrations. Evaporation is able to remove total dissolved solids with a DF of 1,000. Two ion exchange beds in series also provide a DF of about 1,000. Filtration DFs are variable, based on the individual compound. Treatability testing should be conducted to identify the decontamination factors that will actually be realized in the full-scale facility.

The overall decontamination factors (DFs) listed in Table 5-1 are a combination of the individual DFs for the unit operations. The unit operation DF values were obtained from multiple sources, as previously described.

5.1.3 Implementability

Implementation of this alternative will be discussed in terms of secondary wastes generated and the radiation dose levels associated with the secondary wastes. Maintainability; reliability and technological maturity; procurement, construction, and availability of pre-engineered systems; and operational manpower requirements also are considered.

All of the unit operations comprising Alternative 1 produce radioactive secondary waste, either directly or indirectly. Specifically, the filtration system produces filter solids; the evaporator produces a concentrated slurry; the GAC adsorption system produces spent activated carbon; and the ion exchange system produces spent ion exchange resin. The estimated quantities of secondary waste are listed in Table 5-2. The spent carbon and IX resin will have to be disposed of and cannot easily be regenerated because of the radioactive contamination they will retain from the treatment process.

Based on a carbon use rate of 1690 L of water treated per kg of carbon (203 gal/lb), about 2,352 kg (5,175 lbs) of spent GAC will be produced annually by Alternative 1. Radiation dose rates are estimated at 5×10^{-7} R/hr for one 1.0 m^3 (35.2 ft^3) canister of spent carbon from a distance of 30 cm (1 ft). Dose rates for spent carbon in stacked and lined 208 L (55 gal) barrels are 3 to 4 orders of magnitude less than that for a canister full of spent carbon from the same distance. On average, five canisters, or 24 drums, of spent carbon will be generated each year.

Ion exchange bed size, design wastewater influent concentrations, and wastewater flow should allow the ion exchange resins to remain in place for up to 10 years before disposal. Estimated radiation dose rates for one 0.3 m^3

(12 ft^3) IX column range up to 0.005 R/h from a distance of 30 cm (1 ft). Dose rates for spent IX resins in stacked and lined 208 L (55 gal) barrels are estimated to be 1 to 2 orders of magnitude less than that for the ion exchange column.

Radiation exposure from filter and evaporator secondary wastes will be reduced because of the automation of the processes. Dose rates from filter slurries in a tanker car are estimated to be less than 10 mR/h at 100 cm. Dose rates from evaporator bottoms in the same geometry are less than 150 mR/h at 100 cm. Considering these dose rates, the small volumes of filter and evaporator wastes generated, and the frequency of change out of spent IX resins and spent activated carbon, radiation exposure can be minimized for this alternative.

Routine maintenance and operation is required for several of the unit operations comprising Alternative 1. The filtration and GAC adsorption systems have components that will be replaced on a periodic basis. The treatment system design reflects the need to replace these parts with minimal effort and frequency.

The filter elements are designed to be automatically backflushed without human contact. In cases where an aggressive cleaning agent is required to remove deposits, special dispensers can supply the cleanser, again with no human contact. It is only when filter elements must be replaced that maintenance workers must be present. Filter element lives of 3 to 10 years are common, especially when precoats are used, because the filter element pores do not become plugged with small solids. Before replacement, the filters should be thoroughly backflushed and cleaned in place to minimize potential exposure hazards.

Maintenance of the GAC columns requires GAC replacement, pump servicing, and routine inspection. None of these operations is technically difficult. The GAC replacement involves hydraulically transferring the spent GAC to a holding tank, dewatering the spent GAC, barreling the spent GAC, and recharging the adsorption vessel. Pump servicing and routine inspection are simple operations. Overall, the GAC adsorption component is relatively easy to maintain. Routine operation will involve sample collection between the two GAC canisters to determine when breakthrough occurs.

Maintenance for the MVR evaporator will need to address three areas; wear on the compressor, scaling of the heat transfer surfaces, and corrosion of the pressure vessel walls and heat transfer surface areas. Compressor wear can be monitored by the use of appropriate sensors on the rotating elements and by visually inspecting components at regularly scheduled intervals. The evaporator has a scale control system, but scaling needs to be monitored by observing heat transfer performance over a period of time. If scale deposits need to be removed, it may be necessary to clean the heat transfer surfaces if other means are not successful in controlling scaling. Corrosion can be monitored by a careful nondestructive inspection program using ultrasonic thickness testing, acoustic emissions testing, X-ray inspection, and visual inspection. If corrosion rates are excessive or pitting develops, repairs will have to be made to the appropriate areas. None of these maintenance requirements is unusual or exceptional. Operating time is estimated at two

man-hours per shift. General duties include monitoring operations, housekeeping, and sample chemistry evaluation.

In this alternative, IX operation requires little to no maintenance activities, other than pump maintenance. This is because of the predicted 10 year life of the IX resin in this particular application. Operational staffing requirements are estimated at 2100 h/yr for the entire process train.

Alternative 1 is a very reliable and technically mature process. Most of the unit operations provide passive treatment with few moving parts. If components of the alternative were to fail, the likely result would be the stopping or reducing of flow through the system rather than discharging contaminated water. The unit operations also are well-established technologies. They are fairly simple, and capable of treating many types of wastewater under variable conditions. Pilot testing may be conducted to modify and refine the treatment process before full-scale implementation. It is anticipated that shortcomings can be identified and corrected at that stage.

Procurement and construction times are driven by the lead-time for the evaporator. The evaporator is the largest, most complicated, and most expensive piece of equipment in Alternative 1. Vendor estimates indicate it will take 44 weeks from order to delivery for the evaporator. All other process units are deliverable in less than 44 weeks. Installation of support systems for the process train, such as piping, instrumentation, buildings, and electrical lines could begin before process equipment delivery but could not be finished until all equipment was in place.

5.1.4 Cost

The cost estimate for Alternative 1 is summarized in Table 5-2. The estimate is divided into costs and annual operating costs. The total estimated purchased equipment cost is $969,000. Process equipment includes the filter, the evaporator, two GAC canisters, four IX columns, and three stainless steel holding tanks.

Purchased equipment costs were obtained through contacts with vendors, or through the use of previous recent quotes for similar equipment. Where previous quotes were used, equipment costs were scaled using the formula:

$$Cost_{NRxtr} = Cost_{Prev} \, (Size_{NRxtr} \, / \, Size_{Prev})^{Pwr}, \text{ where}$$

$Cost_i$ = Purchased equipment costs
$Size_i$ = Critical equipment capacity (e.g., volume)
Pwr = Size-Cost relationship factor, generally 0.6.

Table 5-2. Cost Estimate for Alternative 1.

Process Equipment			
A. Sintered metal filter (58.8 sq. ft)			$30,000
B. Vapor compression evaporator (25 gpm)			$775,000
C. GAC (2 35-cu ft canisters)			$10,000
D. Ion exchange (4 12-cu ft columns)			$64,000
E. Tanks (3 - 15K gallon)			$90,000
	Purchased Equipment Cost		$969,000
Installed Cost Factors			
Item	Factor	Multiplier	
A. Installation	0.39	1.39	
B. Piping	0.05		
C. Instrumentation	0.08		
D. Building	0.25		
E. Facilities	0.15		
F. Outside lines	0.1	1.63	
G. Engineering/Construction	0.27		
H. Administration	0.31		
I. Contingency	0.4	1.98	
		Installed Cost	$4,350,810
Annual Operating Costs			
A. Waste Disposal			
Waste	# Units	Unit Cost	
Filter sludge (gal)	1,663	217.42	$361,570
Stabilized evaporator bottoms (gal)	1,050	13.59	$14,271
Spent carbon (drums)	24	2,260.274	$54,247
Spent resin (drums)	0.7	2,260.274	$1,479
B. Electricity			
Evaporator (kW*hr)	87,500	0.02	$1,750
C. Materials			
Item			
GAC (lbs)	5,175	1	$5,175
IX resin	0	---	$0
Precoat/bodyfeed (lbs)	24,486	1	$245
Sulferic acid (lbs)	650	0.128	$83
Sodium hydroxide (lbs)	13	0.2708	$4
Hydrogen peroxide (lbs)	0	0.65	$0
Drums (55 gal)	25	50	$1,250
D. Manpower			
Operations (hours)*	2,100	45	$94,500
Ann maintenance (% cap.)	5	969,000	$48,450
	Total Annual Operating Cost		$582,967

*Based on 700 h/yr, 3 persons (2 Process Operators, 1 OHP).

Purchased equipment costs were converted to installed equipment costs using a series of factors proposed by Chilton (1979). In this method, installed equipment costs are obtained from purchased equipment costs using the following relationship:

Installed Cost = Purchased Cost (F1)(F2)(F3), where

F1 = Installation factor
F2 = 1+f1+f2+f3+f4+f5
F3 = 1+f6+f7+f8

Each factor in the above equation was assigned a value based upon established factors used for previous Hanford Site wastewater treatment system evaluations, and the specific characteristics of the proposed N Reactor wastewater treatment system. These factors are provided in Table 5-2, and are discussed in further detail below.

The F1 or "installation" factor is used to account for the relative complexities of various types of processing facilities, with F1 ranging from 1.39 for mixed fluid/solid handling processes to 1.47 for fluid processing. For the N Reactor wastewater treatment system alternatives, a factor of 1.39 was chosen.

The f1 "piping" or "auxiliary equipment" factor is used to adjust costs for piping installation for various types of processes, and ranges from 0.05 to 0.10 for a solids processing plant to 0.3 to 0.6 for a fluid processing plant. A value of 0.05 was chosen for the alternative effluent treatment systems, based on factors used in previous Hanford Site effluent treatment system evaluations using pre-packaged treatment equipment.

The f2 or "instrumentation" factor is used to account for instrumentation costs for the process. This factor ranges from 0.02 to 0.05 for a process where few if any automatic controls are used, to 0.10 to 0.15 for a process where a complex control system is installed. A value of 0.08, was chosen for the N Reactor treatment alternatives; this factor is consistent with that used for similar Hanford Site treatment processes.

The f3 or "building" factor is used to adjust costs based upon whether equipment is to be installed inside or outside, and ranges from 0.05 to 0.20 for outdoor units to 0.60 to 1.0 for indoor units. A value of 0.25 was used for the N Reactor alternatives, consistent with that used for similar Hanford Site treatment process designs.

The f4 or "facilities" factor accounts for cost differences between modifications to existing facilities and new, stand alone installations, and includes the cost for new or significantly modified buildings. Suggested ranges for this factor run from 0.0 to 0.05 for minor additions, up to 0.25 to 1.0 for a new site. For the N Reactor alternatives, f4 was set to 0.15, consistent with the factor used for similar Hanford Site treatment processes.

The f5 or "outside lines" factor is used to adjust the costs of providing utilities to the new process and ranges from 0.0 to 0.05 for a modification to an existing facility, up to 0.15 to 0.25 for new, widely scattered installations. A value of 0.1, corresponding to the midpoint for the

"separated units" range, was chosen to allow for the possibility of performing some unit operations in existing locations, with other unit operations performed in different new or existing facilities. This factor is consistent with that used for similar Hanford Site treatment processes.

The f6 or "engineering/construction" factor ranges from 0.20 to 0.35 for simple processes, to 0.35 to 0.50 for complex plants. A value of 0.27 was chosen for the N Reactor alternatives, consistent with that used for other Hanford Site wastewater treatment systems using pre-packaged treatment equipment.

The f7 "administration" or "size" factor adds the cost of project management/administration to the total equipment costs. This factor ranges from 0.0 to 0.05 for large (expensive) plants, to 0.15 to 0.35 for experimental (pilot production) facilities. For the N Reactor alternatives, a value of 0.31 was used. This factor is consistent with that used for previous Hanford Site BAT studies.

The f8 "contingency" factor adjusts the cost estimate for the level of detail and certainty associated with the process flowsheet, and ranges from 0.10 to 0.20 for a firm process, to 0.30 to 0.50 for a "tentative" process. Based upon the relative uncertainties about ultimate process conditions for the N Reactor wastewater, a value of 0.40 was chosen.

Using this technique, the installed equipment cost for Alternative 1 is estimated to be approximately $4.35 million, as detailed in Table 5-2. The estimated annual operations and maintenance (O & M) cost for Alternative 1 is $582,967. About 74 percent of the annual O & M cost is associated with secondary waste disposal.

All secondary wastes are assumed to require disposal at the Hanford Site. Spent GAC and spent IX resin are assumed to be placed in the 200 Area Central Waste Complex for storage and eventual treatment. Costs for these operations are assumed to be $2,260 per 208 L (55 gal) drum based upon data provided by Westinghouse Hanford (WHC 1991). The evaporator slurry and filter solids were assumed to be transferred to the DSTs and either treated further or stabilized for permanent disposal. Cost for disposal of filter solids was assumed to be $57.44/L ($217.42/gal); cost for the disposal of evaporator slurry are $3.60/L ($13.59/gal).

The equivalent uniform annualized cost (EUAC) of Alternative 1 was calculated using a 7 percent time value of money and a project life of 10 years. The EUAC provides the annual operating and maintenance costs for the treatment system, including costs associated with the capital equipment investment. The estimated EUAC for Alternative 1 is $1.2 million.

5.2 ALTERNATIVE 2

5.2.1 Process Description

Alternative 2 consists of flocculation and settling, precipitation, filtration, and air stripping. Ancillary unit operations include a feed batch

tank preceding the settling tank, intermediate holding tanks for flow equalization and system pH adjustment, and holding tanks for sampling treated effluent before release. The process diagram is shown in Figure 4-2.

The feed batch tank is used to accumulate effluent until enough effluent has been generated to effectively operate the system, allowing for system startup and equilibration. The tank also equalizes the flow entering the treatment system, providing a more consistent composition and flow rate to the treatment equipment. Tank size and construction are as described for Alternative 1.

The first treatment operation is flocculation and settling. Wastewater is pumped to a continuous-flow two-chamber clarifier, sized to provide a minimum 3 h hydraulic retention time at the design flow rate. The wastewater is treated with an ionic polymer flocculant, at an assumed dose rate of 20 ppm. Both the flocculant and dose rate have been assumed based upon N Reactor LETF pilot scale treatment data. The actual polymer and dose should be selected on the basis of treatment tests with the current N Reactor effluent. Settled solids from the clarifier are discharged to the secondary waste handling system in an underflow containing approximately 5 percent by weight solids. The clarifier is a stainless steel vessel, supplied as a modular unit with mixers and sludge removal pump included.

Overflow from the clarifier is fed to a package precipitation/filtration system. For this alternative, a patented, packaged sulfide precipitation and filtration system manufactured by Lancy International, Inc. was evaluated. Wastewater pH is adjusted from 7.36 to about 10, and the wastewater is then treated with a sodium sulfide solution. A continuous monitoring and adjustment system maintains the wastewater at pH 10, with a 2 ppm excess sulfide concentration. Dissolved metal ions are precipitated as either sulfides or hydroxides. The precipitated slurry is fed to a filter, which utilizes a patented filtration aid with ion exchange properties to remove precipitated metals and reduce the excess sulfide concentration in the effluent stream. The filtration aid is expended at a rate of approximately 2.75 kg solids removed per kg filter media. Filter media and sludge are discharged from the filter to the secondary waste handling system.

Filtrate from the precipitation/filtration system flows to an equalization tank, where sulfuric acid is added to adjust the wastewater to about pH 7. This shifts the sulfide-hydrogen sulfide equilibrium towards hydrogen sulfide, facilitating removal of the sulfide with an air stripping system.

After pH adjustment, wastewater is pumped to the top of the first of two air stripping towers operated in series. Each tower is constructed of stainless steel and is 0.46 m (1.5 ft) in diameter and approximately 9.75 m (32 ft) tall, with a 7.6 m (25 ft) packed section filled with 0.025 m (1 inch) polyethylene Jaeger Tri-Packs[1]. The wastewater flows downward through the packed section of each tower; air at a flow rate of 14.2 m^3/min (500 cfm) is blown upward through each packed section. Volatile species, including

[1]Jaeger Tri-Packs is a registered trademark owned by Jaeger Products, Inc., Houston, Texas.

organics, hydrogen sulfide, and ammonia, are transferred from the wastewater to the airstream. The airstream flows through a demister and on to a propane-fired thermal oxidizer, equipped with a 50% efficient recuperative heat exchanger and operating at 800 to 1100 °C (1500 to 2000 °F). This oxidizer removes approximately 98% of the organics, ammonia, and hydrogen sulfide from the airstream prior to its release to the environment by means of the building high efficiency particulate air (HEPA) filtration system.

Treated wastewater is pumped from the air strippers to one of two 56,000 L steel batch holding tanks for sampling before release to the environment. The holding tank system is equipped with a recycle line to allow off-specification effluent to be routed back to the feed head tank for further processing.

5.2.2 Effectiveness

The predicted effluent water quality for Alternative 2 is provided in Table 5-3. In general, treatment was not effective in removing many of the heavy metals (arsenic, cadmium, chromium, lead, selenium and silver), radionuclides, low-volatility or highly soluble organics (acetone, 2-butanone, hexone), or hydrazine from the wastewater. Treated effluent concentrations less than or equal to the comparative effluent levels were not achieved for these compounds. A total of 6,981 toxic equivalent kg/yr (15,359 lb/yr) are removed by Alternative 2.

5.2.3 Implementability

The estimated quantities of secondary wastes produced by Alternative 2 are listed in Table 5-4. Approximately 1,500 L/yr (400 gal/yr) of settled solids and 212 L/yr (56 gal/yr) of precipitate are generated.

Total radiological dose rates are anticipated to be slightly lower than those encountered in Alternative 1. This expected reduction in dose rate is because of the lower radionuclide removal achieved, and therefore lower concentrations of radionuclides in secondary wastes.

All of the unit operations involved in Alternative 2 use proven, mature, technologies. When properly sized and adjusted for the characteristics of the waste stream, all unit operations can be anticipated to provide predictable levels of treatment.

Alternative 2 uses unit operations that involve a minimum of mechanical equipment and that require low levels of maintenance. Filter element life is anticipated to be similar to that for Alternative 1. Somewhat more sophisticated control of processing conditions, especially the pH and free sulfide concentration of feed to and effluent from the precipitation and filtration processes, is required. Air stripping towers require periodic maintenance to maintain their effectiveness. Scale and biological growth on the packing material may eventually inhibit the performance of the towers. In place cleaning or periodic replacement of the air stripping tower packing will be necessary.

Table 5-3. Predicted Effluent Quality for Alternative 2. (sheet 1 of 3)

Constituents	Influent concentration (ug/L)	Removal efficiencies				Effluent concentration (ug/L)	Comparative levels		Toxic mass removed (lb/yr)**
		F/S (%R)	P/F (%R)	AS (%R)	Overall (DF)		Chronic (ug/L)	Acute (ug/L)	
Inorganics									
Ammonia	2,230	0	0	99.99988	1.40E+04	1.60E-01	16.66	128.18	6.55E+00
Arsenic	130.8	89	89	0	8.18E+01	1.60E+00*	0.018		3.51E+02
Barium	41.4	35	54	0	3.34E+00	1.24E+01			1.42E-03
Boron	83.4	0	19	0	1.23E+00	6.76E+01			
Cadmium	20	29	78	0	6.34E+00	3.15E+00*	0.76		1.17E+00
Calcium	16,700	0	16	0	1.19E+00	1.40E+04			
Chloride	12,500	0	0	0	1.00E+00	1.25E+04*	230	860	0.00E+00
Chromium (VI)	60.8	27	59	0	3.32E+00	1.83E+01*	11	16	2.31E-01
Fluoride	204	0	3	0	1.03E+00	1.98E+02			
Iron	2,960	53	0	0	2.11E+00	1.40E+03*	300		3.31E-01
Lead	389.4	68	78	0	1.32E+01	2.94E+01*	1.66		1.10E+01
Magnesium	4,330	16	62	0	3.11E+00	1.39E+03			
Manganese	86.9	35	93	0	2.19E+01	3.96E+00	50		8.12E-02
Nitrate	438	0	0	0	1.00E+00	4.38E+02			0.00E+00
Potassium	679	0	4	0	1.04E+00	6.52E+02			
Selenium	420.8	0	70	0	3.33E+00	1.26E+02*	5	20	4.33E+00
Silicon	2,040	0	43	0	1.75E+00	1.16E+03			
Silver	4.9	13	82	0	6.42E+00	7.63E-01*	0.12		1.69E+00
Sodium	2,030	0	0	0	9.60E-03	2.12E+05			
Strontium	87.3	4	50	0	2.08E+00	4.20E+01			
Sulfate	12,100	0	60	0	3.05E-02	3.97E+05			

Table 5-3. Predicted Effluent Quality for Alternative 2. (sheet 2 of 3)

Constituents	Influent concentration (ug/L)	Removal efficiencies				Effluent concentration (ug/L)	Comparative levels		Toxic mass removed (lb/yr)**
		F/S (%R)	P/F (%R)	AS (%R)	Overall (DF)		Chronic (ug/L)	Acute (ug/L)	
Sulfide (as H2S)			99.2	99.9999		1.83E-04	2		
Uranium	2.84	45	0	0	1.82E+00	1.56E+00			
Zinc	121	39	89	0	1.47E+01	8.22E+00*	0.66	0.6	8.36E+00
Organics									
Acetone	173	0	1	22.6	1.31E+00	1.33E+02*	50		
1-butanol	3.62	0	0	11.6	1.13E+00	3.20E+00			
2-butanone	291	0	0	30.1	1.43E+00	2.03E+02*	50		
BHT	13.5	0	0	0	1.00E+00	1.35E+01			
Hydrazine	312	0	0	0	1.00E+00	3.12E+02*	0.01		
Hexone (MIBK)	103	0	0	50.6	2.02E+00	5.09E+01*	50		
Toluene	5.36	33	0	99.99	1.49E+04	3.59E-04			1.84E-05
Trichloromethane	51.9	54	32	99.99	3.20E+04	1.62E-03	0.19		1.34E+01
Radionuclides	(pCi/L)					(pCi/L)	(pCi/L)		
Am-241	7.03E+01	45	76	0	7.39E+00	9.52E+00*	1.2		2.48E+00
Cm-242	4.93E-01	45	76	0	7.39E+00	6.68E-02			5.21E-04
Cm-244	8.92E-01	45	76	0	7.39E+00	1.21E-01			1.57E-02
Co-60	7.00E+03	38	0	0	1.60E+00	4.38E+03*	200		6.42E-01
Cs-134	1.67E+03	4	0	0	1.04E+00	1.60E+03*	80		4.09E-02
Cs-137	4.71E+05	4	0	0	1.04E+00	4.52E+05*	200		9.00E+00
C-14	4.24E+01	0	0	99	1.00E+02	4.24E-01			7.34E-04
H-3	5.54E+06	0	0	0	1.00E+00	5.54E+06*	20,000		

Table 5-3. Predicted Effluent Quality for Alternative 1. (sheet 3 of 3)

Constituents	Influent concentration (ug/L)	Removal efficiencies				Effluent concentration (ug/L)	Comparative levels		Toxic mass removed (lb/yr)**
		F/S (%R)	P/F (%R)	AS (%R)	Overall (DF)		Chronic (ug/L)	Acute (ug/L)	
Mn-54	6.04E+03	38	38	0	2.60E+00	2.32E+03*	1,000		1.82E-01
Pb-210	2.97E+01	66	78	0	1.34E+01	2.22E+00*	1		1.35E+00
Pu-238	1.09E+01	45	76	0	7.58E+00	1.44E+00	1.6		2.89E-01
Pu-239/240	6.66E+01	45	76	0	7.58E+00	8.79E+00*	1.2		2.36E+00
Radium	3.30E-01	45	76	0	7.58E+00	4.36E-02	0.3		4.68E-02
Ru-106	1.72E+04	4	66	0	3.06E+00	5.61E+03*	100		5.68E+00
Sr-90	1.76E+06	4	50	0	2.08E+00	8.45E+05*	3		1.49E+04
U-234	1.60E+00	45	76	0	7.58E+00	2.11E-01			3.40E-03
U-235	2.17E-01	45	76	0	7.58E+00	2.86E-02			3.84E-04
U-238	1.13E+00	45	76	0	7.58E+00	1.49E-01			1.73E-03
TOTAL TOXIC MASS REMOVED									1.54E+04

Toxic mass removed per year is based on the design stream flow of 3,974,250 L/yr (1,050,000 gal/yr).
Comparative Levels are as previously presented in Table 3-1.
Ammonia, sodium, sulfate, and sulfide concentrations in the treated effluent are effected by chemical additions during processing.

*Compound for which treatment targets are not met in the final treated effluent.
**Calculated as described in Section 3.2.5.

%R = % Removal (Concentration based).
A/S = Air stripping.
DF = Decontamination factor.
F/S = Flocculation and settling.
P/F = Precipitation and filtration.

Table 5-4. Cost Estimate for Alternative 2.

Process Equipment			
A. Clarifier w/Polymer Addn System (25 gpm)			$28,500
B. Sodium Sulfide Ppn/Filtration System (25 gpm)			$80,000
C. Air Strippers (25 ft x 1.5 ft; 2 ea.)			$76,700
D. Fume Incinerator (1,000 cfm, 50% recuperative)			$160,000
E. Tanks (3 - 15K gallon)			$90,000
	Purchased Equipment Cost		$435,200
Installed Cost Factors			
Item	Factor	Multiplier	
A. Installation	0.39	1.39	
B. Piping	0.05		
C. Instrumentation	0.08		
D. Building	0.25		
E. Facilities	0.15		
F. Outside lines	0.1	1.63	
G. Engineering/Construction	0.27		
H. Administration	0.31		
I. Contingency	0.4	1.98	
	Installed Equipment Cost		$1,952,345
Annual Operating Costs			
A. Waste Disposal			
Waste	Units	Unit Cost	
Liquid flocced solids (gal)	400	217	$86,968
Precipitate (gal)	56	217	$12,152
B. Materials			
Item	# Units	Unit cost	
Propane (gal)	69,000	0.75	$51,750
Electricity (Kw-Hrs)	3,200	0.02	$64
Flocculant polymer (lbs)	175	1	$175
Sodium Sulfide (lbs)	460	0.83	$382
Sulfuric acid (lbs)	3,762	0.128	$482
Sodium hydroxide (lbs)	5,432	0.2708	$1,471
Filter media (lbs)	300	3.5	$1,050
C. Manpower			
Operations (manhours)*	2,100	45	$94,500
Maintenance (% Capital)	5	435,200	$21,760
	Total Annual Operating Cost		$270,753

*Based on 700 h/yr, 3 persons (2 Process Operators, 1 OHP).

All treatment equipment required for Alternative 2 is available in pre-engineered packaged systems. Standard delivery times of 16 to 20 weeks are anticipated.

5.2.4 Costs

Estimated installed equipment and operating costs for this alternative are provided in Table 5-4. The costs were estimated as described in Section 5.1.4. Installed equipment cost is estimated to be $1.95 million. Annual O&M costs are approximately $271,000. The EUAC is about $549,000/yr.

5.3 ALTERNATIVE 3

Alternative 3 is similar to Alternative 1, differing in that RO is added in place of the IX component (Figure 4-3). Section 5.1 includes a discussion of the filtration, GAC adsorption, and evaporation processes. Only the differences resulting from the inclusion of RO are discussed in this section.

5.3.1 Process Description

The primary process train of Alternative 3 consists of four conventional water treatment operations: filtration, GAC adsorption, RO, and evaporation. Filtration removes suspended solids; GAC adsorption removes organic compounds; RO removes large dissolved molecules and ions; and evaporation removes dissolved solids. The process, as a whole, relies on the passive removal of compounds by separating them from the water. The compounds are captured on solid materials (filters, GAC, and membranes) which themselves become wastes requiring treatment or disposal. Evaporation concentrates secondary wastewater from the RO unit.

The first step in the process is filtering to remove suspended solids with a diameter above 1 μm. The filtration system used is essentially identical to that described in Alternative 1. The final GAC adsorption process also is essentially the same.

Reverse osmosis follows the filtration step. The RO filters remove large dissolved molecules and ions that cannot pass through the membrane pores. A single-stage RO system is used, that removes about 90 percent of the ions and about 70 percent of the organic materials. Two streams are produced from the RO system: a treated stream and a reject stream. Approximately 10 percent of the total wastewater volume is retained in the reject stream from the RO unit, resulting in an overall reject flow of about 9.5 L/min (2.5 gpm) and a permeate flow of 85 L/min (22.5 gpm). The reject stream will be sent to the MVR evaporator. Evaporation and other secondary waste treatment operations were described in Section 5.1.1.

5.3.2 Effectiveness

The estimated composition of the treated water exiting the Alternative 3 process train is shown in Table 5-5. The columns of this table are as described in Section 5.1.2.

Overall, treated effluent concentrations for Alternative 3 exceeded comparative effluent levels for several compounds, including ammonia, some priority pollutant metals, hydrazine, trichloromethane, and many radionuclides. In general, RO is not as effective in removing dissolved solids as evaporation, resulting in significantly reduced overall DFs from those seen in Alternative 1. Multiple stages of RO may improve system performance. Adding multiple stages of RO to the treatment train would significantly increase the overall costs of this alternative. Multiple passes through a single stage of RO also would increase equipment costs for this alternative, as the RO unit also would need to be significantly oversized to maintain the desired 25 gpm continuous flow rate. A total of 12,152 toxic equivalent kg/yr (26,734 lb/yr) are removed by Alternative 3.

5.3.3 Implementability

All of the unit operations comprising Alternative 3 produce radioactive secondary waste, either directly or indirectly: the filtration systems produce solids and occasionally used filter elements; the RO system generates spent RO membranes and produces a waste stream that is evaporated to produce concentrated waste; and the GAC system produces spent carbon. The estimated quantities of secondary waste are listed in Table 5-6. Radiation exposure will differ from Alternative 1 in that GAC will not need to be changed as often because of the RO unit. The RO membranes will need to be changed out about every three years, which will entail some radiation exposure.

Alternative 3 is a reliable and technically viable option for treating wastewater. Reverse osmosis filtration involves a physical separation and has been used in many different applications where high water quality is needed. Its major mode of failure is fouling of membranes. Nevertheless, there are ways to reduce the fouling. As with filtration, fouling is reduced by over-sizing the equipment. Also, pre-filtration removes much of the material that would foul the membrane. It is important to note that if fouling does occur, it will reduce the capacity of the RO system, but does not result in poorer water quality. The success of RO depends on selecting the right type of membrane, sizing the system correctly, providing filtration in advance of the RO system, and cleaning the RO membranes regularly. Reverse osmosis success also is dependent on high-pressure pumps that circulate wastewater in the RO system.

5.3.4 Costs

The cost estimate for Alternative 3 is summarized in Table 5-6. The estimate is divided into process equipment costs, costs for other equipment and support, and operations and maintenance (O & M) costs.

Table 5-5. Predicted Effluent Quality for Alternative 3. (sheet 1 of 3)

Constituents	Influent concentration (ug/L)	Removal efficiencies					Effluent concentration (ug/L)	Comparative levels		Toxic mass removed (lb/yr)**
		F (%R)	RO (%R)	E (DF)	GAC (%R)	Overall (DF)		Chronic (ug/L)	Acute (ug/L)	
Inorganics										
Ammonia	2,230	0	90	100	5	9.57E+00	2.33E+02*	16.66	128.18	5.87E+00
Arsenic	130.8	10	90	1,000	5	1.15E+01	1.14E+01*	0.018		3.25E+02
Barium	41.4	20	75	1,000	5	5.19E+00	7.97E+00			1.64E-03
Boron	83.4	10	80	1,000	5	5.75E+00	1.45E+01			
Cadmium	20	20	99	1,000	5	2.17E+02	9.20E-02	0.76		1.38E+00
Calcium	16,700	0	95	1,000	5	2.05E+01	8.16E+02			
Chloride	12,500	0	80	1,000	5	5.19E+00	2.41E+03*	230	860	2.14E+00
Chromium (VI)	60.8	80	96	1,000	5	1.30E+02	4.68E-01	11	16	3.28E-01
Fluoride	204	0	86	1,000	5	7.39E+00	2.76E+01			
Iron	2,960	94	90	1,000	5	1.78E+02	1.66E+01	300		6.25E-01
Lead	389.4	63	99	1,000	5	2.35E+02	1.66E+00	1.66		1.18E+01
Magnesium	4330	0	94	1,000	5	1.71E+01	2.53E+02			
Manganese	86.9	66	80	1,000	5	1.54E+01	5.66E+00	50		7.96E-02
Nitrate	438	0	95	1,000	5	2.05E+01	2.14E+01			2.04E-03
Potassium	679	13	90	1,000	5	1.19E+01	5.72E+01			
Selenium	420.8	0	90	1,000	5	1.03E+01	4.07E+01*	5	20	5.58E+00
Silicon	2,040	90	75	1,000	5	4.15E+01	4.91E+01			
Silver	4.9	14	75	1,000	5	4.85E+00	1.01E+00*	0.12		1.59E+00
Sodium	2,030	0	40	1,000	5	1.74E+00	1.17E+03			
Strontium	87.3	6	90	1,000	5	1.10E+01	7.96E+00			
Sulfate	12,100	0	60	1,000	5	2.60E+00	4.65E+03			

Table 5-5. Predicted Effluent Quality for Alternative 3. (sheet 2 of 3)

Constituents	Influent concentration (ug/L)	Removal efficiencies					Effluent concentration (ug/L)	Comparative levels		Toxic mass removed (lb/yr)**
		F (%R)	RO (%R)	E (DF)	GAC (%R)	Overall (DF)		Chronic (ug/L)	Acute (ug/L)	
Uranium	2.84	90	90	1 000	5	1.03E+02	2.75E-02			
Zinc	121	56	90	1 000	5	2.32E+01	5.21E+00*	0.66	0.6	8.59E+00
Organics				(Alpha)						
Acetone	173	25	80	4.08	0	1.34E+00	1.29E+02*	50		
1-butanol	3.62	0	70	0.49	99	1.12E+02	3.22E-02			
2-butanone	291	0	70	1.83	99	1.03E+02	2.83E+00	50		
BHT	13.5	0	70	0.00	99	3.10E+02	4.35E-02			
Hydrazine	312	0	70	0.65	99	1.10E+02	2.84E+00*	0.01		
Hexone (MIBK)	103	35	70	0.51	99	1.72E+02	5.98E-01	50		
Toluene	5.36	0	86	0.72	99	1.11E+02	4.85E-02			1.82E-05
Trichloromethane	51.9	3	71	3.08	99	1.04E+02	4.97E-01*	0.19		1.33E+01
Radionuclides	(pCi/L)						(pCi/L)	(pCi/L)		
Am-241	70.3	90	90	1,000	5	1.03E+02	6.81E-01	1.2		2.84E+00
Cm-242	0.493	90	90	1,000	5	1.03E+02	4.77E-03			5.97E-04
Cm-244	0.892	90	90	1,000	5	1.03E+02	8.64E-03			1.80E-02
Co-60	7,000	87	90	1,000	5	7.65E+01	9.15E+01	200		1.69E+00
Cs-134	1,670	13	90	1,000	5	1.18E+01	1.41E+02*	80		9.36E-01
Cs-137	471,000	13	90	1,000	5	1.19E+01	3.97E+04*	200		2.06E+02
C-14	42.4	0	90	1,000	5	1.03E+01	4.11E+00			6.70E-04
H-3	5,544,000	0	0	1	0	1.00E+00	5.54E+06*	20,000		0.00E+00
Mn-54	6,040	66	90	1,000	5	3.05E+01	1.98E+02	1,000		2.86E-01

Table 5-5. Predicted Effluent Quality for Alternative 3. (sheet 3 of 3)

Constituents	Influent concentration (ug/L)	Removal efficiencies					Effluent concentration (ug/L)	Comparative levels		Toxic mass removed (lb/yr)**
		F (%R)	RO (%R)	E (DF)	GAC (%R)	Overall (DF)		Chronic (ug/L)	Acute (ug/L)	
Pb-210	29.7	63	90	1,000	5	2.80E+01	1.06E+00*	1		1.40E+00
Pu-238	10.9	90	90	1,000	5	1.04E+02	1.05E-01	1.6		3.30E-01
Pu-239/240	66.6	90	90	1,000	5	1.04E+02	6.40E-01	1.2		2.69E+00
Radium	0.33	90	90	1,000	5	1.04E+02	3.17E-03	0.3		5.34E-02
Ru-106	17,200	41	90	1,000	5	1.77E+01	9.73E+02*	100		7.95E+00
Sr-90	1,760,000	6	90	1,000	5	1.11E+01	1.59E+05*	3		2.61E+04
U-234	1.6	90	90	1,000	5	1.04E+02	1.54E-02			3.88E-03
U-235	0.217	90	90	1,000	5	1.04E+02	2.08E-03			4.38E-04
U-238	1.13	90	90	1,000	5	1.04E+02	1.09E-02			2.28E-03
TOTAL TOXIC MASS REMOVED										2.67E+04

NOTE: Alternative 3 is not a true series in that concentrate from the RO unit goes to the evaporator and then evaporator distillate is entered into the stream with the RO permeate. Thus the entire flow does no pass through the evaporator.
Toxic mass removed per year is based on the design stream flow of 3,974,250 L/yr (1,050,000 gal/yr).
Organic DFs for evaporation are based on relative volatility factors (1/alpha).
Comparative Levels are as previously presented in Table 3-1.
Sodium and sulfate concentrations in the treated effluent are effected by chemical additions during processing.

*Constituent does not meet effluent quality criteria in treated effluent.
**Calculated as described in Section 3.2.5.

%R = % Removal (concentration based).
DF = Decontamination factor.
E = Evaporation.
F = Filtration.
GAC = GAC adsorption.
RO = Reverse osmosis.

Table 5-6. Cost Estimate for Alternative 3.

Process Equipment			
A. Sintered metal filter (58.8 sq. ft)			$30,000
B. Vapor compression evaporator (25 gpm)			$775,000
C. GAC (2 35-cu ft canisters)			$10,000
D. Reverse osmosis (25 gpm)			$100,000
E. Tanks (3 - 15K gallon)			$90,000
		Purchased Equipment Cost	$1,005,000
Installed Cost Factors			
Item	Factor	Multiplier	
A. Installation	0.39	1.39	
B. Piping	0.05		
C. Instrumentation	0.08		
D. Building	0.25		
E. Facilities	0.15		
F. Outside lines	0.1	1.63	
G. Engineering/Construction	0.27		
H. Administration	0.31		
I. Contingency	0.4	1.98	
		Installed Cost	$4,508,516
Annual Operating Costs			
A. Waste Disposal			
Waste	# Units	Unit Cost	
Filter solids (gal)	1,663	217.42	$361,563
Evaporator bottoms (gal)	1,050	13.59	$14,271
Spent carbon (drums)	24	2,260.274	$54,247
B. Electricity			
Unit	kW*hr	Unit Cost	
Evaporator	87,500	0.02	$1,750
C. Materials			
Item	# Units	Unit Cost	
GAC (lbs)	5,175	1	$5,175
Precoat/bodyfeed (lbs)	244.86	1	$245
Sulferic acid (lbs)	650	0.128	$83
Sodium hydroxide (lbs)	13	0.2708	$4
Hydrogen peroxide (lbs)	0	0.65	$0
RO Membranes	0.2	1,300	$260
Drums (55 gal ea.)	24	50	$1,200
D. Manpower			
Operations (manhours)*	2,100	45	$94,500
Ann. maintenance (% cap.)	5	1,005,000	$50,250
		Total Annual Operating Cost	$583,548

*Based on 700 h/yr, 3 persons (2 Process Operators, 1 OHP).

The estimated purchased equipment cost is $1,005,000. The total installed equipment cost, estimated as described in Section 5.1.4, is approximately $4.51 million. The estimated annual O & M cost is about $583,000, nearly 74 percent of which is secondary waste disposal. The estimated EUAC of Alternative 3 is $1.23 million/yr.

5.4 ALTERNATIVE 4

5.4.1 Process Description

Alternative 4 uses three of the four unit operations previously described in Alternative 1: filtration, evaporation, and IX. The key difference in these alternatives is the organic treatment method used. In this alternative, organics and oxidizable inorganics such as hydrazine are removed through UV/Oxidation.

Overheads from the evaporator are pumped to the UV/Oxidation treatment process. The system evaluated for this alternative uses hydrogen peroxide to oxidize species that have been activated by excitation with UV light. Approximately 270 kW of electrical power are needed to supply the necessary energy by means of UV lamps. The relatively high energy input (as compared to similarly sized wastewater treatment systems) is required to effectively remove chlorinated species, predominantly chloroform, from the effluent. Peroxide is used at a dosage of approximately 0.25 kg per 1,000 L (2 lb per 1,000 gal) of wastewater. Carbonaceous species in the effluent are completely oxidized to water and carbon dioxide. The carbon dioxide generated shifts the carbonic acid - bicarbonate equilibrium toward the bicarbonate, slightly increasing the acidity of the solution fed to the IX columns. This slight increase in acidity is not anticipated to significantly decrease the life or efficiency of the IX system.

5.4.2 Effectiveness

The predicted effluent water quality for Alternative 4 is provided in Table 5-7. Alternative 4 provides the highest level of treatment of all options considered. Treated effluent concentrations are below comparative effluent levels for all compounds with the exception of tritium, which is not removed by any of the treatment processes considered. A total of 13,461 toxic equivalent kg (29,615 toxic equivalent lb) are removed annually by Alternative 4.

5.4.3 Implementability

The estimated quantities of secondary wastes produced by Alternative 4 are listed in Table 5-8. Approximately 6,294 L/yr (1,663 gal/yr) of filter solids, and 3,974 L/yr (1,050 gal/yr) of evaporator bottoms are generated. As with Alternative 1, a portion of the ultimate costs for resin disposal has been included in the annual operating costs. Total radiological dose rates are anticipated to be the same as those encountered in Alternative 1.

Table 5-7. Predicted Effluent Quality for Alternative 4. (sheet 1 of 3)

Constituents	Influent concentration (ug/L)	Removal efficiencies						Effluent concentration (ug/L)	Comparative levels		Toxic mass removed (lb/yr)**
		F (%R)	E (DF)	UV/OX (%R)	IX(A) (DF)	IX(B) (DF)	Overall (DF)		Chronic (ug/L)	Acute (ug/L)	
Inorganics											
Ammonia	2,230	0	100	99	100	10	1.00E+07	2.23E-04	16.66	128.18	6.55E+00
Arsenic	130.8	10	1,000	0	100	10	1.11E+06	1.18E-04	0.018		3.56E+02
Barium	41.4	20	1,000	0	100	10	1.25E+06	3.31E-05			2.03E-03
Boron	83.4	10	1,000	0	100	10	1.11E+06	7.51E-05			
Cadmium	20	20	1,000	0	100	10	1.25E+06	1.60E-05	0.76		1.39E+00
Calcium	16,700	0	1,000	0	100	10	1.00E+06	1.67E-02			
Chloride	12,500	0	1,000	0	100	10	1.00E+06	1.25E-02	230	860	2.66E+00
Chromium (VI)	60.8	80.4	1,000	0	100	10	5.10E+06	1.19E-05	16	11	3.30E-01
Fluoride	204	0	1,000	0	100	10	1.00E+06	2.04E-04			
Iron	2,960	94.2	1,000	0	100	10	1.72E+07	1.72E-04	300		6.29E-01
Lead	389.4	63	1,000	0	100	10	2.70E+06	1.44E-04	1.66		1.18E+01
Magnesium	4,330	0	1,000	0	100	10	1.00E+06	4.33E-03			
Manganese	86.9	66.2	1,000	0	100	10	2.96E+06	2.94E-05	50		8.51E-02
Nitrate	438	0	1,000	0	100	10	1.00E+06	4.38E-04			2.14E-03
Potassium	679	13	1,000	0	100	10	1.15E+06	5.91E-04			
Selenium	420.8	0	1,000	0	100	10	1.00E+06	4.21E-04	5	20	6.18E+00
Silicon	2,040	90	1,000	0	100	10	1.00E+07	2.04E-04			
Silver	4.9	14	1,000	0	100	10	1.16E+06	4.21E-06	0.12		2.01E+00
Sodium	2,030	0	1,000	0	100	10	4.41E+00	2.30E+02			
Strontium	87.3	5.8	1,000	0	100	10	1.06E+06	8.22E-05			
Sulfate	12,100	0	1,000	0	100	10	8.26E+04	1.47E-01			

Table 5-7. Predicted Effluent Quality for Alternative 4. (sheet 2 of 3)

Constituents	Influent concentration (ug/L)	Removal efficiencies						Effluent concentration (ug/L)	Comparative levels		Toxic mass removed (lb/yr)**
		F (%R)	E (DF)	UV/OX (%R)	IX(A) (DF)	IX(B) (DF)	Overall (DF)		Chronic (ug/L)	Acute (ug/L)	
Uranium	2.84	90	1,000	0	100	10	1.00E+07	2.84E-07			
Zinc	121	55.5	1,000	0	100	10	2.25E+06	5.38E-05	0.66	0.6	8.97E+00
Organics			(Alpha)								
Acetone	173	25	4.08	99.9	1	1	1.31E+03	1.32E-02	50		
1-butanol	3.62	0	0.49	99.9	1	1	1.02E+03	3.55E-03			
2-butanone	291	0	1.83	99.9	1	1	9.91E+02	2.94E-01	50		
BHT	13.5	0	0.003	99.9	1	1	7.65E+03	1.77E-03			
Hydrazine	312	0	0.65	99.999	1	1	1.01E+05	3.09E-03	0.01		
Hexone (MIBK)	103	35	0.51	99.9	1	1	1.57E+03	6.57E-02	50		
Toluene	5.36	0	0.72	99.9	1	1	1.01E+03	5.32E-03			1.78E-04
Trichloromethane	51.9	3	3.08	99.8	1	1	5.09E+02	1.02E-01	0.19		2.46E+02
Radionuclides	(pCi/L)							(pCi/L)	(pCi/L)		
Am-241	7.03E+01	90	1,000	0	100	10	1.00E+07	7.03E-06	1.2		2.87E+00
Cm-242	4.93E-01	90	1,000	0	100	10	1.00E+07	4.93E-08			6.03E-04
Cm-244	8.92E-01	90	1,000	0	100	10	1.00E+07	8.92E-08			1.82E-02
Co-60	7.00E+03	86.5	1,000	0	100	10	7.41E+06	9.45E-04	200		1.71E+00
Cs-134	1.67E+03	13	1,000	0	10	10	1.15E+05	1.45E-02	80		1.02E+00
Cs-137	4.71E+05	13	1,000	0	10	10	1.15E+05	4.10E+00	200		2.25E+02
C-14	4.24E+01	0	1	99	1	1	1.00E+02	4.24E-01			7.34E-04
H-3	5.54E+06	0	1	0	1	1	1.00E+00	5.54E+06*	20,000		2.71E-01
Mn-54	6.04E+03	66.2	1,000	0	100	10	2.96E+06	2.04E-03	1,000		2.96E-01

Table 5-7. Predicted Effluent Quality for Alternative 4. (sheet 3 of 3)

Constituents	Influent concentration (ug/L)	Removal efficiencies						Effluent concentration (ug/L)	Comparative levels		Toxic mass removed (lb/yr)**
		F (%R)	E (DF)	UV/OX (%R)	IX(A) (DF)	IX(B) (DF)	Overall (DF)		Chronic (ug/L)	Acute (ug/L)	
Pb-210	2.97E+01	63	1,000	0	100	10	2.70E+06	1.10E-05	1		1.45E+00
Pu-238	1.09E+01	90	1,000	0	100	10	1.00E+07	1.09E-06	1.6		3.33E-01
Pu-239/240	6.66E+01	90	1,000	0	100	10	1.00E+07	6.66E-06	1.2		2.72E+00
Radium	3.30E-01	90	1,000	0	100	10	1.00E+07	3.30E-08	0.3		5.39E-02
Ru-106	1.72E+04	41.1	1,000	0	100	10	1.70E+06	1.01E-02	100		8.43E+00
Sr-90	1.76E+06	5.8	1,000	0	100	10	1.06E+06	1.66E+00	3		2.87E+04
U-234	1.60E+00	90	1,000	0	100	10	1.00E+07	1.60E-07			3.92E-03
U-235	2.17E-01	90	1,000	0	100	10	1.00E+07	2.17E-08			4.43E-04
U-238	1.13E+00	90	1,000	0	100	10	1.00E+07	1.13E-07			2.31E-03
TOTAL TOXIC MASS REMOVED											2.96E+04

Toxic mass removed per year is based on the design stream flow of 3,974,250 L/yr (1,050,000 gal/yr).
Organic DFs for Evaporation are based on relative volatility factors (1/alpha).
Comparative Levels are as previously presented in Table 3-1.
Sodium and sulfate concentrations in the treated effluent are effected by chemical additions during processing.

*Constituent does not meet effluent quality criteria in treated effluent.
**Calculated as described in Section 3.2.5.

%R = % Removal (concentration based).
DF = Decontamination factor.
E = Evaporation.
F = Filtration.
GAC = GAC adsorption.
IX(A) = 1st Series of Cation/Anion Exchange.
IX(B) = 2nd Series of Cation/Anion Exchange.

Table 5-8. Cost Estimate for Alternative 4.

Process Equipment			
A. Sintered metal filter (58.8 sq. ft)			$30,000
B. Vapor compression evaporator (25 gpm)			$775,000
C. UV/Oxidation system (270 kW, peroxide based)			$325,000
D. Ion exchange (4-12 cu ft columns)			$64,000
E. Tanks (3 - 15K gallon)			$90,000
	Purchased Equipment Cost		$1,284,000
Installed Cost Factors			
Item	Factor	Multiplier	
A. Installation	0.39	1.39	
B. Piping	0.05		
C. Instrumentation	0.08		
D. Building	0.25		
E. Facilities	0.15		
F. Outside lines	0.1	1.63	
G. Engineering/Construction	0.27		
H. Administration	0.31		
I. Contingency	0.4	1.98	
		Installed Cost	$5,760,134
Annual Operating Costs			
A. Waste Disposal			
Waste	# Units	Unit Cost	
Filter solids (gal)	1,663	217.42	$361,563
Evaporator bottoms (gal)	1,050	13.59	$14,271
Spent resin (drums)	0.7	2,260.27	$1,479
B. Electricity			
Unit	kW*hr	Unit Cost	
UV/Oxidation system	210,000	0.02	$4,200
Evaporator	87,500	0.02	$1,750
C. Materials			
Item	# Units	Unit Cost	
IX Resin	0	---	$0
Precoat/bodyfeed (lbs)	244.86	1	$245
Sulfuric acid (lbs)	650	0.128	$83
Sodium hydroxide (lbs)	13	0.2708	$4
Hydrogen peroxide (lbs)	2,100	0.65	$1,365
D. Manpower			
Operations (manhours)*	2,100	45	$94,500
Maintenance (% capital)	5	1,284,000	$64,200
	Total Annual Operating Costs		$543,660

*Based on 700 h/yr, 3 persons (2 Process Operators, 1 OHP).

When properly sized and adjusted for the characteristics of the waste stream, all unit operations in Alternative 4 can be anticipated to provide predictable levels of treatment. The use of UV/Oxidation for organic removal is a relatively new, but established, technology.

Alternative 4 is more mechanically complex than Alternative 1. However, significantly increased maintenance requirements are not anticipated. Vendor contacts estimated that the UV/Oxidation system would require approximately $6,000/month for maintenance for a continuously-operating system; maintenance costs for the UV/Oxidation component of Alternative 4 are expected to be significantly less than this amount. Maintenance required for the UV/Oxidation system include lamp replacement and cleaning.

All treatment equipment required in Alternative 4 is available in pre-engineered packaged systems. Both the evaporator and UV/Oxidation systems are relatively long lead-time procurements. For the evaporator, delivery is anticipated to require 44 weeks; UV/Oxidation system delivery will require approximately 24 weeks.

5.4.4 Costs

Estimated installed equipment and operating costs for this alternative are provided in Table 5-8. The installed equipment cost is estimated to be $5.76 million, using the method described in Section 5.1.4. Annual O & M costs are estimated to be approximately $544,000. The EUAC is about $1.36 million/yr.

5.5 ALTERNATIVE 5

5.5.1 Process Description

Alternative 5 uses filtration, GAC adsorption, and ion exchange. These unit operations were described in Alternative 1. There are two key differences between Alternatives 1 and 5. In Alternative 5, an evaporator is not used; thus, the dissolved solids loadings to the IX columns in Alternative 5 are much higher than in Alternative 1. Also, to facilitate disposal of secondary wastes without relying upon the 200 Area DSTs, an onsite grout plant similar to that described in Section 8 of this report has been incorporated into Alternative 5.

In Alternative 1, the evaporator and IX system combined provided a DF for dissolved solids of 1,000,000. To provide an equivalent level of dissolved solids removal, Alternative 5 will require 5 sets of cation/anion exchange columns operated in series. Cation/anion levels in the wastewater to the IX columns of Alternative 5 are approximately 2.06 meq/L, while for the IX columns of Alternative 1 cation/anion loadings are 0.0007 meq/L. Each set of ion exchange columns in Alternative 5 will be comprised of one cation and one anion canister with a volume of 1.3 cu m (45 cu ft) per canister. Based on the design annual flow of 3,974,250 L/yr (1,050,000 gal/yr), 5.4 sets of canisters or 10.8 total canisters will need to be replaced and disposed of each year.

5.5.2 Effectiveness

The predicted effluent water quality for Alternative 5 is provided in Table 5-9. Alternative 5 provides the same level of treatment as Alternative 1. Comparative effluent levels were exceeded for tritium and certain organics such as acetone, hydrazine, and trichloromethane. Tritium is not removed by any of the processes considered, while the mentioned organics are only removed by the UV/Oxidation unit of Alternative 4. A total of 13,355 toxic equivalent kg (29,381 lb) are removed annually by Alternative 5.

5.5.3 Implementability

Dose rates are anticipated to be similar to those of Alternative 1; however, total personnel doses will be much higher for Alternative 5 than Alternative 1, because of more frequent IX resin change outs.

All the units of Alternative 5 are very reliable as discussed in previous sections. Secondary waste volumes generated are provided in Table 5-10; all secondary wastes are stabilized at N Reactor and shipped to the 200 Area Central Waste Complex.

All treatment equipment used in Alternative 5 comes in pre-engineered packaged systems. Procurement and construction times for the treatment equipment of Alternative 5 are less than those for all Alternatives 1, 3 and 4, as Alternative 5 does not incorporate an evaporator.

5.5.4 Costs

Estimated costs for Alternative 5 are provided in Table 5-10. Installed equipment costs, including the costs for an onsite secondary waste treatment plant, are estimated to be $8.14 million, using the method described in Section 5.1.4. Annual O&M costs, including the cost of secondary waste management, are approximately $1.13 million. The EUAC is about $2.29 million/yr.

5.6 COLUMBIA RIVER DISPOSAL

5.6.1 Process Description

In this disposal method, treated effluent will be discharged to the Columbia River under a NPDES permit. Because tritium concentrations in the effluent exceed state ambient water quality criteria, a mixing zone within the river would be required as a permit condition.

Wastewater batches held within one of the two 57,000 L (15,000 gal) discard tanks would be sampled to ensure permit conditions are met. After sampling, the treated effluent would be pumped or flow by gravity to the river through the current N Reactor outfall. A discharge rate of 400 L/min (100 gal/min) has been assumed to allow each discard tank to be drained within 2 1/2 hours.

Table 5-9. Predicted Effluent Quality for Alternative 5. (sheet 1 of 3)

Chemical	Influent concentration (ug/L)	Removal efficiencies								Effluent concentration (ug/L)	Comparative levels		Toxic mass removed (lbs/yr)**
		F (%R)	GAC (%R)	IX(A) (DF)	IX(B) (DF)	IX(C) (DF)	IX(D) (DF)	IX(E) (DF)	Overall (DF)		Chronic (ug/L)	Acute (ug/L)	
Inorganics													
Ammonia	2,230	0	5	100	10	10	10	10	1.05E+06	2.12E-03	16.66	128.18	6.55E+00
Arsenic	130.8	10	5	100	10	10	10	10	1.17E+06	1.12E-04	0.0018		3.56E+02
Barium	41.4	20	5	100	10	10	10	10	1.34E+06	3.10E-05			2.03E-03
Boron	83.4	10	5	100	10	10	10	10	1.17E+05	7.10E-04			
Cadmium	20	20	23	100	10	10	10	10	1.67E+06	1.20E-05	0.76		1.39E+00
Calcium	16,700	0	5	100	10	10	10	10	1.05E+06	1.59E-02			
Chloride	12,500	0	5	100	10	10	10	10	1.05E+06	1.19E-02	230	860	2.66E+00
Chromium	60.8	80.4	30	100	10	10	10	10	7.60E+06	8.00E-06	11	16	3.30E-01
Fluoride	204	0	5	100	10	10	10	10	1.05E+06	1.94E-04			
Iron	2,960	94.2	33	100	10	10	10	10	2.57E+07	1.15E-04	300		6.29E-01
Lead	389.4	63	4	100	10	10	10	10	2.82E+06	1.38E-04	1.66		1.18E+01
Magnesium	4,330	0	5	100	10	10	10	10	1.05E+06	4.11E-03			
Manganese	86.9	66.2	1	100	10	10	10	10	3.00E+06	2.90E-05	50		8.51E-02
Nitrate	438	0	5	100	10	10	10	10	1.05E+06	4.16E-04			2.14E-03
Potassium	679	13	5	100	10	10	10	10	1.21E+06	5.61E-04			
Selenium	420.8	0	33	100	10	10	10	10	1.49E+05	2.82E-03	5	20	6.18E+00
Silicon	2,040	90	5	100	10	10	10	10	1.05E+07	1.94E-04			
Silver	4.9	14	22	100	10	10	10	10	1.63E+06	3.00E-06	0.12		2.01E-01
Sodium	2,030	0	5	100	10	10	10	10	8.83E+00	2.30E+02			
Strontium	87.3	5.8	5	100	10	10	10	10	1.12E+06	7.80E-05			
Sulfate	12,100	0	5	100	10	10	10	10	1.05E+06	1.15E-02			

Table 5-9. Predicted Effluent Quality for Alternative 5. (sheet 2 of 3)

Chemical	Influent concentration (ug/L)	Removal efficiencies								Effluent concentration (ug/L)	Comparative levels		Toxic mass removed (lbs/yr)**
		F (%R)	GAC (%R)	IX(A) (DF)	IX(B) (DF)	IX(C) (DF)	IX(D) (DF)	IX(E) (DF)	Overall (DF)		Chronic (ug/L)	Acute (ug/L)	
Uranium	2.84	90	5	100	10	10	10	10	1.05E+07	2.70E-07			
Zinc	121	55.5	5	100	10	10	10	10	2.37E+06	5.10E-05	0.66	0.6	8.97E+00
Organics													
Acetone	173	25	0	1	1	1	1	1	1.33E+00	1.30E+02*	50		
1-butanol	3.62	0	99	1	1	1	1	1	1.00E+02	3.62E-02			
2-butanone	291	0	99	1	1	1	1	1	1.00E+02	2.91E+00	50		
BHT	13.5	0	99	1	1	1	1	1	1.00E+02	1.35E-01			
Hydrazine	312	0	99	1	1	1	1	1	1.00E+02	3.12E+00*	0.01		
Hexone(MIBK)	103	35	99	1	1	1	1	1	1.54E+02	6.70E-0 1	50		
Toluene	5.36	0	99	1	1	1	1	1	1.00E+02	5.36E-02			1.82E-05
Trichloromethane	51.9	3	99	1	1	1	1	1	1.03E+02	5.03E-01*	*0.19		1.33E+01
Radionuclides	(pCi/L)									(pCi/L)	(pCi/L)		
Am-241	7.03E+01	90	5	100	10	10	10	10	1.00E+07	7.00E-06	1.2		2.87E+00
Cm-242	4.93E-01	90	5	100	10	10	10	10	1.05E+07	4.70E-08			6.03E-04
Cm-244	8.92E-01	90	5	100	10	10	10	10	1.05E+07	8.50E-08			1.82E-02
Co-60	7.00E+03	86.5	2	100	10	10	10	10	7.56E+06	9.26E-04	200		1.71E+00
Cs-134	1.67E+03	13	5	10	10	10	10	10	1.21E+05	1.38E-02	80		1.02E+00
Cs-137	4.71E+05	13	5	10	10	10	10	10	1.21E+05	3.89E+00	200		2.25E+02
C-14	4.24E+01	0	5	1	1	1	1	1	1.05E+00	4.03E+01			3.71E-05
H-3	5.54E+06	0	0	1	1	1	1	1	1.00E+00	5.54E+06*	20000		0.00
Mn-54	6.04E+03	66.2	5	100	10	10	10	10	3.12E+06	1.94E-03	1000		2.96E-01

Table 5-9. Predicted Effluent Quality for Alternative 5. (sheet 3 of 3)

Chemical	Influent concentration (ug/L)	Removal efficiencies								Effluent concentration (ug/L)	Comparative levels		Toxic mass removed (lbs/yr)**
		F (%R)	GAC (%R)	IX(A) (DF)	IX(B) (DF)	IX(C) (DF)	IX(D) (DF)	IX(E) (DF)	Overall (DF)		Chronic (ug/L)	Acute (ug/L)	
Pb-210	2.97E+01	63	5	100	10	10	10	10	2.97E+06	1.00E-05	1		1.45E+00
Pu-238	1.09E+01	90	5	100	10	10	10	10	1.09E+07	1.00E-06	1.6		3.33E-01
Pu-239/240	6.66E+01	90	5	100	10	10	10	10	1.11E+07	6.00E-06	1.2		2.72E+00
Radium	3.30E-01	90	5	100	10	10	10	10	1.06E+07	3.10E-08	0.3		5.39E-02
Ru-106	1.72E+04	41.1	10	100	10	10	10	10	1.89E+06	9.12E-03	100		8.43E+00
Sr-90	1.76E+06	5.8	5	100	10	10	10	10	1.12E+06	1.58E+00	3		2.87E+04
U-234	1.60E+00	90	5	100	10	10	10	10	1.07E+07	1.50E-07			3.92E-03
U-235	2.17E-01	90	5	100	10	10	10	10	1.03E+07	2.10E-08			4.43E-04
U-238	1.13E+00	90	5	100	10	10	10	10	1.03E+07	1.10E-07			2.31E-03
TOTAL TOXIC MASS REMOVED													2.94E+04

Toxic mass removed per year is based on the design stream flow of 3,974,250 L/yr (1,050,000 gal/yr) Comparative Levels are as previously presented in Table 3-1 Sodium concentrations in the treated effluent are effected by chemical additions during processing.

*Constituent does not meet effluent quality criteria in treated effluent
**Calculated as described in Section 3.2.5.

DF = Decontamination factor.
F = Filtration.
GAC = GAC adsorption.
IX(x) = xth Series of Cation/Anion Exchange.
%R = % Removal (concentration based).

Table 5-10. Cost Estimate for Alternative 5.

Process Equipment			
A. Sintered Metal Filter (58.8 sq ft)			$30,000
B. GAC (2 35-cu ft canisters)			$10,000
C. Ion Exchange (10 - 45 cu ft canisters)			$400,000
D. Tanks (3 - 15K gallon)			$90,000
E. Solids Handling System (Grouting)			
Dry Cement Storage (900 cu ft)			$50,000
Cement Mixers (2 - 12.75 gph)			$50,000
Dry Cement Transfer System			$45,000
Drum Filling and Handling System			$1,140,000
	Purchased Equipment Cost		$1,815,000
Installed Cost Factors			
Item	Factor	Multiplier	
A. Installation	0.39	1.39	
B. Piping	0.05		
C. Instrumentation	0.08		
D. Building	0.25		
E. Facilities	0.15		
F. Outside Lines	0.1	1.63	
G. Engineering/Construction	0.27		
H. Administration	0.31		
I. Contingency	0.4	1.98	
		Installed Cost	$8,142,244
Annual Operating Costs			
A. Waste Disposal			
Waste	# Units	Unit Cost	
Stabilized Filter Sludge (Drums)	133	2,260.274	$300,614
Spent Carbon	24	2,260.274	$54,247
Spent Resin (Canisters)	10.8	13,832.88	$149,39[illegible]
C. Materials			
Item	# Units	Unit Cost	
GAC (Lbs)	5,175	1	$5,175
IX Resin (Canisters)	10.8	40,000	$432,000
Precoat/Bodyfeed (Lbs)	244.86	1	$245
Sodium Hydroxide (Lbs)	13	0.2708	$4
Drums (55gal)	157	50	$7,850
D. Manpower			
Operations (Manhours hours)*	2,100	45	$94,500
Ann Maintenance (% Cap.)	5	1,815,000	$90,750
	Total Annual Operating Cost		$1,134,781

*Based on 700 h/yr, 3 persons (2 Process Operator, 1 OHP)

5.6.2 Effectiveness

Tritium concentrations in the treated effluent are anticipated to be about 5.5 μCi/L. Washington State water quality criteria (WAC 173-203) specify a maximum ambient tritium concentration of 0.02 μCi/L. Therefore, a 1:275 reduction is required. The minimum allowable flow rate of the Columbia River in the vicinity of N Reactor is about 1,000 m^3/s (36,000 ft^3/s). At an effluent flow rate of 380 L/min (100 gal/min), the maximum dilution achieved in a mixing zone of 15 percent of the total stream flow (150,000 L/min) is 1:24,000. Therefore, the mixing zone needed to compensate for tritium releases to the Columbia River under nominal process conditions is within the proposed limits established in WAC 173-203 for allowable mixing zones.

5.6.3 Implementability

The existing N Reactor outfall is available for this discharge. Dye tracer and bathythermographic studies conducted while the N Reactor was operating indicate that a 1:7 to 1:8 reduction in effluent concentration can be achieved within the currently-authorized mixing zone with a discharge-to-total river flow ratio of 1:101 to 1:176 (UNI 1983, ARL 1988). Assuming that these mixing characteristics can be extrapolated to significantly reduced discharge conditions, and assuming a total river flow of 1,000 m^3/s, the concentration reduction achievable using the current N Reactor outfall and mixing zone is estimated to be 1:6,989 for a 380 L/min discharge. Therefore, the current N Reactor outfall may provide suitable mixing characteristics for tritium releases under the current reduced operating conditions. Use of the N Reactor outfall will require an NPDES permit.

5.6.4 Cost

Implementation costs for this alternative would be minimal, assuming that only minor modifications to the existing outfall are required. Operating costs also are anticipated to be minimal, and limited to the energy and maintenance costs for any pumps used.

5.7 ONSITE EVAPORATION DISPOSAL ALTERNATIVE

5.7.1 Process Description

In this alternative, treated effluent will be evaporated onsite using dehumidified air. The evaporation system will take advantage of tanks and equipment, currently onsite, that previously were used for reactor operations and lay-up activities.

Treated effluent would be routed to a 3,800,000 L (1,000,000 gal) tank formerly used to store demineralized water. No pH adjustment would take place before evaporation. The treated water will be pumped to one of two 3,000,000 L (800,000 gal) tanks. Inside the tanks, a series of spray nozzles will be used to create a dispersed mist to enhance evaporation. Dehumidified air will be blown through the bottom of the tank; minimum air requirements to

evaporate 3.97 x 10^6 L/yr (1.05 x 10^6 gal/yr) of treated effluent are 30,000 standard cubic ft per minute (scfm) at 21 °C (70 °F) and 20 percent relative humidity. Saturated air will pass through a demister and exit the tank through a 0.5 m (1.5 ft) manhole in the tank roof. Water that does not evaporate will be collected on the floor of the tank and recirculated to the spray nozzles.

5.7.2 Effectiveness

This alternative will allow treated effluent disposal without relying upon a mixing zone within the Columbia River to meet effluent guidelines for tritium. Ambient concentrations of tritium in the air were evaluated for various distances from the evaporation tanks using SCREEN, an EPA-approved computer model for preliminary air emission estimates. These calculations assumed a "stack" 0.5 m in diameter and 13.3 m (40 ft) tall, with a 30,000 scfm air discharge emitting tritium at a rate of 5.03 pg/s. This corresponds to the annual average tritium emission rate from evaporation of 4,000,000 L (1,050,000 gal) of treated N Reactor effluent. Under these conditions, the maximum ambient tritium concentration is predicted to be 2.14 pCi/m^3, at a distance of approximately 800 m from the evaporation tank. This is below the ambient concentration necessary to exceed the federal air emission limit of 10 mRem/year exposure to offsite individuals established in 40 CFR 61, Subpart H. It is also below the 1 mRem/year exposure level established under 40 CFR 61, Subpart H for monitoring of airborne releases.

5.7.3 Implementability

All tanks needed for this disposal option, plus four dehumidifiers, which together can supply the required air, currently are available at the N Reactor. Onsite radiation doses associated with this option are anticipated to be minimal, but slightly higher than for discharge to the Columbia River, as radionuclides other than tritium will be concentrated in the solids at the bottom of the evaporation tanks. Although this option is more complex than discharge to the river and less able to accommodate fluctuations in effluent discharge volumes, spray evaporation and humidification are well-known, reliable, technologically simple processes. Because no discharge to the river or ground will occur, the treatment system will not require a permit under the SWDP or NPDES programs. Permits under state and federal air regulations would be required.

5.7.4 Cost

Implementation costs for this alternative would be minimal, as all necessary equipment is currently available at N Reactor. Operating costs are anticipated to be slightly higher than those for river discharge, but limited to the energy and maintenance costs for the pumps and dehumidifiers. Based upon the anticipated dissolved solids concentration in the treated effluent, less than 1 kg/yr (2.2 lb/yr) of solids will be deposited within the evaporation system.

This page intentionally left blank.

6.0 EVALUATION OF THE CANDIDATE TREATMENT SYSTEMS

Alternatives 1 and 4 have been selected as the preferred options for treatment of the N Reactor effluent. Alternative 1 consists of filtration, evaporation, GAC adsorption, and IX. Alternative 4 is similar to Alternative 1, but substitutes UV/Oxidation for GAC adsorption for the removal of organic compounds and hydrazine. Alternative 1 is the preferred option if little or no organic compounds or hydrazine are present in the effluent. Alternative 4 will be the preferred alternative if treatment for organics and/or hydrazine is required.

The five proposed alternatives described in Section 5 are compared in this chapter. Effectiveness, implementability, and cost form the basis for comparison. Specific parameters evaluated under these categories included the ability to meet treatment targets and total toxic mass removed (effectiveness); ALARA, implementation schedule, and maintenance/reliability (implementability); and EUAC and cost per toxic pound removed (cost).

Alternatives were ranked on a scale of 1 to 5 for each parameter, with the "best" alternative receiving a score of 5 for that parameter and the "worst" a score of 1. These raw scores were then multiplied by the weighting factor for each parameter to achieve a weighted score. The sum of the weighted scores for all seven parameters was then used to identify the two preferred alternatives. The weighting factors and scores for each of the five alternatives are provided in Table 6-1. The results of the evaluation are discussed in detail in the following sections.

6.1 EFFECTIVENESS

The two parameters included under this heading, the ability to meet treatment targets and the total toxic mass removed, were the most heavily weighted. Only Alternative 4 met all treatment goals except those for tritium. Alternatives 1 and 5 met all goals except those for tritium and certain organic compounds. Alternatives 2 and 3 did not meet many of the treatment goals. Similarly, Alternatives 1, 4, and 5 removed the most toxic mass from the N Reactor effluent; Alternatives 2 and 3 were not as effective in terms of total toxic mass removed.

6.2 IMPLEMENTABILITY

Alternatives 2 and 3 were judged to result in the lowest overall worker exposure to radionuclides and hazardous materials; Alternative 2 was ranked lower in this category because of the use of sulfide solutions, which have the potential for hydrogen sulfide gas releases. Alternatives 1, 4, and 5 result in the highest worker exposure, mainly because of their effectiveness in removing radionuclides. Alternative 5 was judged to be the most exposure-intensive, because of the number of required ion exchange resin changeouts.

Table 6-1. Weighting Factors and Scores for Each Alternative.

Screening factors	Weight	Alternative 1		Alternative 2		Alternative 3		Alternative 4		Alternative 5	
		Raw score	Weighted score	Raw score	Weighted score	Raw score	Weighted score	Raw score	Weighted score	Raw score	Weighted score
Effectiveness											
Meets treatment targets	30	4	120	1	30	2	60	5	150	3	90
Total toxic mass removed	20	4*	60	1	20	2	40	5	100	3*	60
Implementability											
ALARA	10	2	20	4	40	5	50	3	30	1	10
Schedule	5	2	10	4	20	3	15	1	5	5	25
Maintenance/reliability	5	3	15	5	20	2	10	1	5	4	20
Cost											
EUAC	20	4	80	5	100	3	60	2	40	1	20
$/Toxic mass removed	10	4	40	5	50	3	30	2	20	1	10
Total score			365		280		265		350		235

*Alternatives 1 and 5 remove the same toxic mass.
Alternative 1 was rated superior to Alternative 5 based upon the total volume of secondary wastes generated to remove an equivalent amount of toxic material.

Alternatives 2 and 5 appear to have the shortest implementation schedule, assuming that equipment procurement lead times will be a substantial element of the overall project schedule. Each of the other alternatives requires the procurement of an MVR evaporator, with a 44 week delivery schedule.

Alternative 2 also appears to be the most mechanically simple process, and therefore received the highest scores for maintenance and reliability. Alternative 4 appears to be the most maintenance intensive and least demonstrated system because it includes more mechanically complex unit operations and requires periodic maintenance of the UV/Oxidation unit.

6.3 COST

Table 6-2 summarizes the cost data developed in Section 5. The costs provided in Table 6-2 are order-of-magnitude, and are based upon scaling factors applied to process equipment costs. In most cases, process equipment costs were obtained from vendors; in some cases, process equipment costs were estimated based upon costs for similar equipment of differing size. The cost data reported in Table 6-2 should be used only for the comparison of alternatives.

Table 6-2. Cost Data for Alternatives 1-5.

	Installed equipment costs	Annual operating costs	EUAC	Cost per toxic lb removed
Alternative 1	$4,350,810	$582,967	$1,202,522	$41
Alternative 2	1,952,345	270,753	548,767	36
Alternative 3	4,508,516	583,548	1,225,561	46
Alternative 4	5,760,134	543,660	1,363,903	46
Alternative 5	8,142,246	1,134,781	2,294,237	78

Alternative 2 has a significantly lower EUAC and cost per toxic mass removed as compared to any of the other alternatives. The EUACs and cost per toxic pound removed for Alternatives 1, 3, and 4 are within about 15 percent of each other, and cannot be considered significantly different given the uncertainties within the cost estimates. Alternative 5 has the highest EUAC and cost per toxic pound removed, and is about twice as costly as Alternative 1.

An additional point of comparison between the alternatives is economic achievability. Economic achievability is determined using the cost-effectiveness method as specified in the BAT guidance document (WHC 1988). This method uses the toxic mass and EUAC for each alternative. The alternatives are arranged in order based upon increasing EUAC. Next, the incremental increase in cost and incremental increase in toxic removal are

calculated for each alternative. The cost/benefit of each alternative is then evaluated by rationing the incremental increase in cost and the associated increased toxic removal. An initial threshold of $200/kg additional incremental cost has been set as the upper limit of cost-effectiveness (WHC 1988).

Table 6-3 shows the cost effectiveness of the five alternatives. Alternative 1 appears to be a cost-effective improvement over Alternative 2. The cost of additional toxicity removal obtained by Alternative 4 when compared to Alternative 1 appears to be excessive; however, not all wastewater constituents (e.g., acetone and hydrazine) are assigned a toxic weighting factor and therefore credited in the toxicity removal calculations established under Westinghouse Hanford guidelines (WHC 1988). This is particularly true for organic compounds. Therefore, Alternative 4 still may be considered economically achievable and reasonable treatment by state and federal regulators.

Table 6-3. N Reactor BAT Study Cost Effectiveness of N Reactor Treatment Alternatives.

	EUAC (FY 1992)	Toxic mass removed (kg)	Incremental increases		
			EUAC (FY 1992	Toxic mass (kg)	EUAC/mass ($/kg)
Alternative 2	$548,767	6,981	- - -	- - -	- - -
Alternative 1	$1,202,522	13,355	$653,755	6,373.6	$103
Alternative 3	$1,225,561	12,152	$23,039	- - -	- - -
Alternative 4	$1,363,903	13,461	$161,381*	106*	$1,522
Alternative 5	$2,294,237	13,355	$930,334	- - -	- - -

*Incremental values and EUAC/mass are in comparison to Alternative 1.

7.0 SELECTED TREATMENT ALTERNATIVES

7.1 INTRODUCTION

Alternatives 1 and 4 have been selected as the preferred treatment options for the N Reactor effluent. These alternatives are discussed in further detail in this chapter. Key assumptions and design parameters are highlighted, along with the ability of these alternatives to meet treatment targets.

7.2 SELECTED ALTERNATIVES

Alternatives 1 and 4 have been identified as the preferred options for the N Reactor effluent treatment system. Alternative 1 operations consist of filtration, evaporation, GAC, and IX (Figure 4-1). Alternative 4 operations consist of filtration, evaporation, UV/peroxide oxidation, and IX (Figure 4-4).

7.2.1 Key Assumptions

The conclusions reached in this study are based on several key assumptions and estimates. These assumptions and estimates are highlighted in this section.

7.2.1.1 Design Effluent Characteristics. Assumed influent concentrations are provided in Table 2-1 for both Alternatives 1 and 4. Effluent constituents and concentrations were derived from the N Reactor stream specific report of August 1990 (Ecology et al. 1990). This report is based on data from samples collected during the transition from cold standby to dry lay-up. Since N Reactor currently is in dry lay-up, the wastewater flow rate has been greatly reduced, and increases in the concentrations of many constituents over those seen in 1990 have been observed. Based on a 2- to 28-fold increase in radionuclide concentrations observed at the 1301-N Lift Station, the concentrations for most constituents were adjusted upward by a factor of 10 from those reported in 1990.

There is a question as to the actual organic content of the wastewater. Analytical test reports from offsite laboratories indicate that organics are present; however the stream specific report states that organics were not introduced to the wastewater, and are present because of laboratory error. While this may be true, each alternative includes a process to remove organics to maintain an appropriate level of conservatism. Organics are considered to be present in the wastewater for study purposes only. Selection of the final treatment process should be based upon the confirmed organic content of the wastewater. If organics are not present, or are present at levels below comparative effluent limits, Alternative 1 is the preferred option. For higher organic concentrations, Alternative 4 is preferred.

7.2.1.2 Design Wastewater Feed Rate. Design feed rate is assumed to be 3,974,250 L/yr (1,050,000 gal/yr) with a maximum flow of 95 L/min (25 gpm).

Design feed rate and design maximum flow rate have been established based upon plans for future N Reactor shutdown activities that will generate liquid effluent.

7.2.1.3 Decontamination Factors. Based on design stream concentrations, vendor information, EPA data base information, and engineering estimates, decontamination factors or removal efficiencies were calculated for each contaminant for each individual train component and for the overall process train. The decontamination factors are presented in Tables 5-1 and 5-7 for Alternatives 1 and 4, respectively. Decontamination factors for Alternative 4 are much greater for organics than Alternative 1 because of the greater removal efficiencies associated with UV/Oxidation versus GAC adsorption. Activated carbon is not effective for treating low-molecular weight ketones in the aqueous phase; if acetone is present at concentrations above relevant regulatory criteria, Alternative 4 is the preferred option.

7.2.2 Preliminary Design Information

Preliminary design information for Alternatives 1 and 4 is provided in the following sections. Dimensions for process equipment are based on information provided by vendors, and do not include shielding materials for radioactive material processing. Equipment sizing is dependent on stream flow and contaminant makeup.

7.2.2.1 Component Footprints. The filter element has an approximate outside diameter of 40.6 cm (16 in.) with inlet and outlet ports on each side that protrude another 15.2 cm (6 in.). The estimated area needed for the filter unit is approximately 91.4 cm x 91.4 cm (3 ft x 3 ft). The evaporation unit will take up an area of 12.2 m x 8.5 m (40 ft x 28 ft), making it by far the most space-consuming piece of equipment in the process. A minimum of 50 ft of overhead clearance also is required for the evaporator. The GAC canisters for Alternative 1 are each 1.1 m (45 in.) in diameter; thus, two canisters will take up an area of about 1.5 m x 3 m (5 ft x 9.8 ft). The UV/Oxidation process for Alternative 4 requires an area approximately 3.3 m x 2.7 m (10 ft x 8 ft). Each IX system will take up an area approximately 2 m x 3 m (5 ft by 9.5 ft); thus the two units IX used in Alternatives 1 and 4 will require an area of about 2 m x 7 m (5 ft x 20 ft). Additional space also will be required to provide adequate access for safe maintenance and operation, and for radioactive shielding.

7.2.2.2 Design Data and Sizing Calculations. Equipment designs for both Alternatives 1 and 4 are based on the assumed stream flow of 3,974,250 L/yr (1,050,000 gal/yr), with a maximum stream flow of 95 L/min (25 gpm), and the wastewater characteristics detailed in Table 2-1.

The filtration step uses a pressurized microfilter with an area of 5.5 m^2 (58.8 ft^2). Pressure filters are advantageous in that high pressures can be used to overcome head loss and negative head conditions are not created. Filter aid addition as pre-coat and body feed are indicated for this wastewater application. Typical pre-coat loading is 0.5 to 1.0 kg/m^2 (0.1 to 0.2 lb/ft^2). Pre-coat protects against blinding of the filter by fines and ensures easy cake discharge without sticking. Pre-coat is usually diatomaceous earth or fly ash. Body feed will be added at a rate of 2 to

10 ppm. Based on the design wastewater characteristics the filter will be backflushed approximately 13 times a year.

The evaporation step uses a mechanical vapor recompression brine concentrator. The brine concentrator consists of a vertical tube, falling film evaporator. Based on vendor information the design waste stream can be effectively reduced by a DF of 1,000. Assuming a constant 95 L/min (25 gpm) waste stream into the evaporator the concentrated waste stream out of the evaporator will be approximately 0.095 L/min (0.025 gpm). Concentrated slurry will consist of 5 percent solids by weight. A seed slurry will be used in the evaporator to help in the control of scaling. Scale will form on the seed slurry and not the heat transfer surfaces. The system can be operated continuously down to 48 L/min (13 gpm).

The GAC process uses two canisters in series with 1.0 m^3 (35.2 ft^3) of activated carbon each. From vendor information based on a 3,974,250 L/yr (1,050,000 gal/yr) waste stream, 2,357 kg (5185 lb) of activated carbon will be needed per year. Because each canister holds 480 kg (1056 lb) of activated carbon, five canisters will be needed per year. This system can handle a 95 L/min (25 gpm) stream flow but will require frequent carbon changeouts if the flow remains at this maximum for any length of time. It is recommended that the activated carbon canisters be replaced with larger units if significantly more than 1,050,000 gal of wastewater will be treated per year.

The UV/oxidation system has been sized to provide the maximum removal of oxidizable species possible. The key design parameters are contact time, oxidant time, oxidant dose rate, and UV energy input. The system size in this case is dictated by the trichloromethane (chloroform) content of the wastewater, as chloroform is not readily treated in this process. The required DF can be achieved with a hydrogen peroxide dose of approximately 1 kg/4,000 L (2 lb/1,000 gal), and 270 kW of UV light energy.

The IX system consists of two sets of cation and anion beds in series, with each bed containing 0.33 m^3 (12 ft^3) of resin. Based upon vendor data and typical IX resin capacities, these resin beds are adequate for treating approximately 37.9 million liters (10 million gallons) of N Reactor effluent. Therefore, resin regeneration or changeout is not anticipated over the life of the treatment process.

7.2.2.3 Treatment Chemical Requirements. Both Alternatives 1 and 4 use chemical additives to help remove waste water contaminants and improve treatment equipment operating efficiency. The addition of precoat and body feed allow for longer filtration times between backflushes. Precoat will be used at a rate of 0.5 to 1.0 kg/m^2 (0.1 to 0.2 lb/ft^2) per backflush, and body feed will be used at a constant rate of 2 to 10 kg/L. This will result in a total of 111 kg (245 lb) of pre-coat and body feed added to the filtration process annually.

In order to minimize fouling and scaling within the evaporator, sulfuric acid must be added. Sulfuric acid is added to the incoming effluent to adjust the pH to a range from 5.5 to 6.0. The bicarbonates present are thus converted to CO_2 and then steam stripped in the deaerator. Based on the design wastewater pH of 7.36 and the yearly wastewater flow of 3,974,250 L/yr (1,050,000 gal/yr), 296 kg (650 lb) of sulfuric acid will be used annually.

The UV/oxidation system will require the addition of hydrogen peroxide at a rate of approximately 1 kg/4,000 L (2 lb/1,000 gal) processed. This will require approximately 950 kg (2,100 lb) of hydrogen peroxide per year.

Final pH adjustment of the treated effluent will require a minimal amount (approximately 6 kg) of sodium hydroxide per year.

7.2.3 Ability to Meet Comparative Effluent Levels

Comparative effluent levels were met for most constituents by each of the two selected alternatives. The exceptions are acetone, hydrazine, and trichloromethane in Alternative 1, and tritium for both Alternatives 1 and 4. Alternative 1 is acceptable if minimal organic treatment is required. While neither alternative is able to remove tritium from the effluent stream, this was expected, as treatment technologies for the removal of tritium from wastewater do not exist.

7.2.4 Secondary Waste Quality

Each alternative produces similar secondary wastes. Filtration wastes are comprised of the solids collected in the filter and backwash solution used to clean the filter. Based on the design wastewater concentrations and flow of 3,974,250 L/yr (1,050,000 gal/yr), 88.2 L (23.3 gal) of filter solids and 396.3 L (104.7 gal) of backwash solution are produced per backflush. The filter will be backflushed approximately 13 times a year, which will generate a total of 6,295 L (1,663 gal) of secondary wastes.

Evaporator secondary wastes will be in the form of a 5 percent by weight solid slurry. Based on a flow of 95 L/min (25 gpm) evaporator slurries are produced at a rate of 5.7 kg/h (12.5 lb/h). Considering the yearly flow of 3,974,250 L (1,050,000 gal), a total volume of 3,974 L (1,050 gal) of evaporator slurries are produced per year.

Secondary waste will be produced by the GAC process in Alternative 1 in the form of spent carbon. A total of 2,357 kg (5185 lb), or 24 drums, of spent carbon will require disposal annually.

Ion exchange secondary wastes will be limited to the one time disposal of IX resins at the end of the 10 year anticipated life of the treatment train. A total volume of 1.4 m^3 (48 ft^3) of IX resins will require disposal.

Radiation and hazardous materials exposure are significantly reduced by the remote operability and simplicity of these alternatives. Radiation exposures are mainly because of secondary waste handling and maintenance. Spent carbon and spent IX resin will require handling; however, because of the low dose rates and frequency of change out, spent IX and GAC should not present a radiation exposure problem. Alternative 1 will have slightly greater radiation exposure risks than Alternative 4 because of the handling of spent carbon.

All secondary wastes are assumed to be mixed wastes based upon the constituents present in the N Reactor effluent and the efficiencies of the treatment processes.

This page intentionally left blank.

8.0 SELECTION OF SECONDARY WASTE TREATMENT AND DISPOSAL OPTIONS

Shipment of unstabilized evaporator bottoms and filter sludges from the N Reactor treatment process to the 200 Area DSTs has been selected as the most cost-effective method for management of these secondary wastes. Spent carbon and IX resins will be shipped to the 200 Area Central Waste Complex for eventual processing and disposal.

Tables 8-1 and 8-2 detail total costs associated with constructing and operating two different variations of Alternative 4. Table 8-1 is identical to Table 5-8, and assumes that secondary wastes are shipped to the DSTs. Approximately 10,300 L (2,700 gal) of secondary waste will be shipped to the DSTs annually. Based upon the dissolved solids contents of the secondary waste slurries, it was assumed that 6,400 L/yr (1,700 gal/yr) of filter solids would be stored in the DSTs and eventually processed through the Hanford Waste Vitrification Plant. Approximately 3,900 L (1,000 gal) of evaporator bottoms would be sent to the Hanford Grout Facility. Costs for treatment through these processes were supplied by Westinghouse Hanford (WHC 1991, 1990b).

Table 8-2 includes costs associated with the construction and operation of an onsite secondary waste stabilization and packaging system to support the treatment process. The waste stabilization system would incorporate evaporator bottoms and filter sludges into a hydraulic cement matrix. This cement mixture would be loaded into drums for shipment to the 200 Areas. All operations would occur in an enclosed facility to minimize worker and environmental exposure. The capital cost for this facility has been estimated based upon previous estimates for a similar facility; these estimates were shown to be relatively insensitive to the total number of drums processed through the facility.

Transportation costs and the costs for shipment loading at N Reactor have not been included in Tables 8-1 and 8-2; however, they are assumed to be roughly the same for both alternatives. The costs in Table 8-1 also assume that an existing railcar loading facility at N Reactor can be used to handle secondary wastes.

The EUAC for shipment to the DSTs is $1.36 million. The EUAC for onsite stabilization is $2.26 million. The major contributor to the increased costs for onsite stabilization is the large capital expenditure necessary to construct a secondary waste treatment facility. Based upon a comparison of costs, shipment to the 200 Area DSTs is the preferred option for secondary waste treatment and disposal.

Table 8-1. Costs - Alternative 4A.

Process Equipment				
A.	Sintered metal filter (58.8 sq ft)			$30,000
B.	Vapor compression evaporator (25 gpm)			$775,000
C.	UV/Oxidation system (270 kW, peroxide based)			$325,000
D.	Ion exchange (4-12 cu ft columns)			$64,000
E.	Tanks (3-15K gallon)			$90,000
			Purchased equipment cost	$1,284,000
Installed Cost Factors				
	Item	Factor	Multiplier	
A.	Installation	0.39	1.39	
B.	Piping	0.05		
C.	Instrumentation	0.08		
D.	Building	0.25		
E.	Facilities	0.15		
F.	Outside lines	0.1	1.63	
G.	Engineering/Construction	0.27		
H.	Administration	0.31		
I.	Contingency	0.4	1.98	
			Installed equipment costs	$5,760,134
Annual operating costs				
A.	Waste Disposal			
	Waste	#Units	Unit Cost	
	Filter solids (gal)	1,663	217.42	$361,563
	Evap. bottoms (gal)	1,050	13.59	$14,271
	Spent resin (drums)	0.7	2,260.27	$1,479
B.	Electricity			
	Unit	kW* Hr	Unit Cost	
	UV/Oxidation system	210,000	0.02	$4,200
	Evaporator	87,500	0.02	$1,750
C.	Materials			
	Item	#Units	Unit Cost	
	IX Resin	0	---	$0
	Precoat/bodyfeed (lbs)	244.86	1	$245
	Sulfuric acid (lbs)	650	0.128	$83
	Sodium hydroxide (lbs)	13	0.2708	$4
	Hydrogen peroxide (lbs	2,100	0.65	$1,365
D.	Manpower			
	Operations (manhours)*	2100	45	$94,500
	Maintenance (%captal)	5	1,284,000	$64,200
			Total annual operating costs	$543,660

*Based upon 700 h/yr, 3 persons (2 process operator, 1 OHP)

Table 8-2. Costs - Alternative 4B.

Process Equipment			
A. Sintered Metal Filter (58.8 sq ft)			$30,000
B. Vapor Compression Evaporator (25 gpm)			$775,000
C. UV/Oxidation System (270 kW, peroxide based)			$325,000
D. Ion Exchange (4 - 12 cu ft columns)			$64,000
E. Tanks (3 - 15K gallon)			$90,000
F. Solids Handling System (Grouting)			
Dry Cement Storage (900 cu ft)			$50,000
Cement Mixers (2 - 12.75 gph)			$50,000
Dry Cement Transfer System			$45,000
Drum Filling and Handling System			$1,140,000
	Purchased Equipment Cost		$2,569,000
Installed Cost Factors			
Item	Factor	Multiplier	
A. Installation	0.39	1.39	
B. Piping	0.05		
C. Instrumentation	0.08		
D. Building	0.25		
E. Facilities	0.15		
F. Outside Lines	0.1	1.63	
G. Engineering/Construction	0.27		
H. Administration	0.31		
I. Contingency	0.4	1.98	
		Installed Costs	$11,524,755
Annual Operating Costs			
A. Waste Disposal			
Waste	# Drums	Unit Cost	
Stabilized Filter Sludge	109	2,260	$246,374
Stabilized Evap Bottoms	53	2,260.27	$119,794
Spent Resin	0.7	2,260.27	$1,479
B. Electricity			
Unit	kW*Hr	Unit Cost	
UV/Oxidation System	210,000	0.02	$4,200
Evaporator	87,500	0.02	$1,750
C. Materials			
Item	# Units	Unit Cost	
IX Resin	0	---	$0
Precoat/Bodyfeed (Lbs)	244.86	1	$245
Sulfuric Acid (Lbs)	650	0.128	$83
Sodium Hydroxide (Lbs)	13	0.2708	$4
Hydrogen Peroxide (Lbs)	2,100	0.65	$1,365
Portland Cement (Lbs)	77,832	0.1	$7,783
Drums (55 Gal, Ea)	162	50	$8,100
D. Manpower			
Operations (Manhours)*	2,100	45	$94,500
Maintenance (% Capital)	5	2,569,000	$128,450
	Total Annual Operating Costs		$614,123

*Based upon 700 h/year, 3 persons (2 Process Operator, 1 OHP).

This page intentionally left blank.

9.0 REFERENCES

10 CFR 20, "Standards for Protection Against Radiation," Title 10, *Code of Federal Regulations*, Part 20, U.S. Nuclear Regulatory Commission, Washington, D.C.

10 CFR 50, "Domestic Licensing of Production and Utilization Facilities," Title 10, *Code of Federal Regulations*, Part 50, as amended, U.S. Nuclear Regulatory Commission, Washington, D.C.

40 CFR 61, "EPA Regulations on National Emission Standards for Hazardous Air Pollutants," Title 40, *Code of Federal Regulations*, Part 61, as amended, U.S. Environmental Protection Agency, Washington, D.C.

40 CFR 131, "Environmental Protection Agency Procedures for Approving State Water Quality Standards," Title 40, *Code of Federal Regulations*, Part 131, as amended, U.S. Environmental Protection Agency, Washington, D.C.

40 CFR 141, "National Primary Drinking Water Regulations," Title 40, *Code of Federal Regulations*, Part 141, as amended, U.S. Environmental Protection Agency, Washington, D.C.

40 CFR 142, "National Primary Drinking Water Regulations Implementation," Title 40, *Code of Federal Regulations*, Part 142, as amended, U.S. Environmental Protection Agency, Washington, D.C.

40 CFR 143, "National Secondary Drinking Water Regulations," Title 40, *Code of Federal Regulations*, Part 143, as amended, U.S. Environmental Protection Agency, Washington, D.C.

40 CFR 190, "Environmental Radiation Protection Standards for Nuclear Power Operations," Title 40, *Code of Federal Regulations*, Part 190, as amended, U.S. Environmental Protection Agency, Washington, D.C.

40 CFR 191, "Environmental Radiation Protection Standards for Management and Disposal of Spent Nuclear Fuel, High-Level and Transuranic Radioactive Wastes," Title 40, *Code of Federal Regulations*, Part 191, as amended, U.S. Environmental Protection Agency, Washington, D.C.

40 CFR 193 (Proposed), "Environmental Standards for the Management, Storage and Land Disposal of Low-Level Radioactive Waste and Naturally Occurring Accelerator-Produced Radioactive Waste," Title 40, *Code of Federal Regulations*, Part 193 (Proposed), U.S. Environmental Protection Agency, Washington, D.C.

40 CFR 261, "Identification and Listing of Hazardous Waste," Title 40, *Code of Federal Regulations*, Part 261, as amended, U.S. Environmental Protection Agency, Washington, D.C.

40 CFR 268, "EPA Regulations on Land Disposal Restrictions," Title 40, *Code of Federal Regulations*, Part 268, as amended, U.S. Environmental Protection Agency, Washington, D.C.

40 CFR 423, "Steam Electric Power Generating Point Source Category," Title 40, *Code of Federal Regulations*, Part 423, as amended, U.S. Environmental Protection Agency, Washington, D.C.

ANSI/ANS, 1979, *American National Standard - Liquid Radioactive Waste Processing System for Light Water Reactor Plants*, ANSI/ANS-55.6-1979, American Nuclear Society, April 1979.

ARL, 1988, *Hydrothermal Modeling of Cooling Water Outfall for N Reactor*, Alden Research Laboratory, Inc., August 1988.

Atomic Energy Act of 1954, 42 USC 2011 et seq.

Chemical Engineering, 1979, *Modern Cost Engineering - Methods and Data*, edited by the staff of Chemical Engineering Magazine, McGraw-Hill Publishing Company, 1979.

Chilton, 1979, *Chemical Engineering*.

Clean Air Act, 42 USC 7401 et seq.

Clean Air Act of 1977, 33 USC 1251 et seq.

DOE, 1990, *Radiation Protection of the Public and the Environment*, DOE Order 5400.5, U.S. Department of Energy, Washington, D.C.

Ecology, EPA, and DOE, 1989, *Hanford Federal Facility Agreement and Consent Order*, as amended, U.S. Department of Energy, U.S. Environmental Protection Agency, and Washington State Department of Ecology, Olympia, Washington.

Ecology, EPA, and DOE, 1990, *Hanford Federal Facility Agreement and Consent Order*, 2 vols., as amended, U.S. Department of Energy, U.S. Environmental Protection Agency, and Washington State Department of Ecology, Olympia, Washington.

Ecology, 1991a, "In the Matter of the Compliance by the United States Department of Energy with Chapter 70.105 and 90.48 RCW and the Rules and Regulations of the Department of Ecology," Draft Consent Order No. DE 91NM-177, dated November 20, 1991, Washington State Department of Ecology, Olympia, Washington.

Ecology, 1991b, *Water Quality Permit Writers Guide (Draft)*, Washington State Department of Ecology, Olympia, Washington.

EPA, 1986, *Quality Criteria for Water*, U.S. Environmental Protection Agency (EPA 440/5-86-001), Washington, D.C., May 1986.

EPA, 1990, *Risk Reduction Engineering Laboratory (RREL) Treatability Database*, U.S. Environmental Protection Agency, Washington, D.C.

Federal Water Pollution control Act of 1972, 33 USC 125 et seq.

Hazardous and Solid Waste Amendments of 1984, 42 USC 6912(a), 6921, 6922, 6924, 6925, 6926, 6930, 6935, 6937, 6939, 6991, and 6993.

Hunacek, G. D., 1991, *N Reactor Effluent Sampling and Analysis Plan*, WHC-SD-NR-PLN-008, Rev. 0, Westinghouse Hanford Company, Richland, Washington.

Resource Conservation and Recovery Act of 1976, 42 USC 6901 et seq.

Safe Drinking Water Act of 1974, 42 USC 300f et seq.

State Board of Health, Revised Code of Washington, Chapter 43.20 et seq., Olympia, Washington.

State of Washington Hazardous Waste Management Act of 1976, Revised Code of Washington, Chapter 70.105 et seq., Olympia, Washington.

UNC, 1986a, Internal Memorandum, A. P. Larrick to D. A. Wiggins and G. P. Simon, "Effect of Polyelectrolyte on Radionuclide Removal," April 23, 1986.

UNC, 1986b, Internal Memorandum, B. R. Ball to A. P. Larrick, "Project H-682 Pilot Study, Summary Report for Run 2," August 21, 1986.

UNC, 1986c, Internal Memorandum, B. R. Ball to A. P. Larrick, "Project H-682 Pilot Study, Summary Report for Run 3," September 30, 1986.

UNC, 1987a, Internal Memorandum, B. R. Ball to D. J. Watson, "Precoat Filter Performance," January 20, 1987.

UNC, 1987b, Internal Memorandum, B. R. Ball to R. E. Worthington, "Project H-682, Influent Properties for FDC Appendix A," April 10, 1987.

UNI, 1983, *N Reactor Thermal Plume Characterization Study During Dual Purpose Mode of Operation*, UNI-2620, Pacific Northwest laboratory, September 1983.

WAC 173-200, "Water Quality Standards for Ground Waters of the State of Washington," *Washington Administrative Code* 173-200, as amended, Washington State Department of Ecology, Olympia, Washington.

WAC 173-201, "Water Quality Standards for Waters of the State of Washington," *Washington Administrative Code* 173-201, as amended, Washington State Department of Ecology, Olympia, Washington.

WAC 173-203, "Water Quality Standards for Surface Waters of the State of Washington," *Washington Administrative Code* 173-203, proposed June 5, 1991, Washington State Department of Ecology, Olympia, Washington.

WAC 173-303, "Dangerous Waste Regulations," *Washington Administrative Code* 173-303, as amended, Washington State Department of Ecology, Olympia, Washington.

WAC 248-54, "Public Water Supplies," *Washington Administrative Code* 248-54, as amended, Washington State Department of Ecology, Olympia, Washington.

WAC 402-24, "Standards for Protection Against Radiation,"*Washington Administrative Code* 402-24, as amended, Washington State Department of Ecology, Olympia, Washington.

Water Pollution Control Act of 1972, 33 USC 1251 et seq.

WHC, 1988, *Best Available Technology (Economically Achievable) Guidance Document for the Hanford Site*, WHC-EP-0137, Westinghouse Hanford Company Waste Management Systems Engineering, Richland, Washington, July 1988.

WHC, 1990a, *N Reactor Effluent Stream Specific Report*, WHC-EP-0342, Addendum 3, Westinghouse Hanford Company N Reactor Environmental Safety, Richland, Washington, August 1990.

WHC, 1990b, *Cost Analysis for Final Disposal of Double Shell Tank Waste*, WHC-SD-WM-ER-079, Westinghouse Hanford Company, Richland, Washington, October 1990.

WHC, 1991, Letter, D. J. Watson (WHC) to R. L. Treat (Ebasco), October 30, 1991.

WPCA, 1971, "Coastal Waters Protection Act," *Revised Code of Washington*, Chapter 90.48 et seq., Olympia, Washington.

APPENDIX A

N REACTOR EFFLUENT BAT IMPLEMENTATION PLAN

This page intentionally left blank.

APPENDIX A

N REACTOR EFFLUENT BAT IMPLEMENTATION PLAN

1.0 PURPOSE

This N Reactor effluent BAT Plan has been prepared to describe the methodology for applying BAT/AKART to the N Reactor effluent in a manner to cease discharge of all effluents to the 1325-N Liquid Waste Disposal Facility. The N Reactor Effluent BAT/AKART evaluation considered alternative treatment processes to achieve a reduction in contaminant concentrations to satisfy one or several regulatory standards. The preferred alternative BAT/AKART processes need to be examined further to determine how best to achieve these results.

Given the shutdown configuration of N Reactor and the time in which liquid effluent would be generated (present through 1999) alternative schemes of implementing what has now been defined as BAT/AKART, needs to be examined to provide an environmentally sound and cost effective means of dispositioning N Reactor liquid effluents in a manner not to compromise regulatory constraints or the schedule of activities leading to the shutdown of N Reactor.

2.0 BAT DETERMINATION

The BAT/AKART determination for the N Reactor effluent was based on two major considerations:

- Water quality
- Effluent flow.

Water quality data consisted of organic, inorganic, and radioactive constituents. The radioactive constituents are based on recent sampling/analysis. These results are a factor of eight to ten times higher than concentrations reported in the N Reactor Stream-Specific Report (WHC-EP-0342, Addendum 3).

This is most likely due to the reduction in effluents from several contributing, less radioactive, effluent streams. Based on this comparison of radionuclide data from then to now, the organic and inorganic constituents were then proportionately increased. This is considered an upper bounding and conservative assumption.

Additional sampling/analysis of the N Reactor effluent and contributing streams has been scoped in a Sampling/Analysis Plan (WHC-SD-NR-PLN-008, Rev. 0). Once this sampling/analysis activity is completed the BAT evaluation will be reassessed.

Effluent flow considerations were based on two conditions:

- The 2 gpm effluent flow restriction to the 1325-N Liquid Waste Disposal Facility that is TPA Milestone M-17-15
- Effluent flows that will be generated during the draining of N Reactor liquid effluent inventories.

The chemical and radiological characterization of these two streams is believed to be nearly identical and will be substantiated through additional sampling and analysis per the SAP referenced above. Due to this assumed similarity in chemical and radiological makeup, the processes evaluated in the BAT/AKART would be applicable to both.

3.0 BAT/AKART IMPLEMENTATION

Based on the technologies evaluated for providing BAT/AKART the most effective means of implementing BAT/AKART needs to be examined. This implementation would consider such factors as:

- Costs based on preliminary engineering/conceptual models
- Schedule and schedule risks
- Optimization of existing Hanford Facilities
- Utilization of future effluent treatment capability
- Regulatory,permitting and NEPA considerations
- Time phasing of draining liquid inventories
- Ability to respond to upset conditions
- Contracting methods.

The means of implementing BAT/AKART will need to be developed following a reassessment of the BAT/AKART evaluation itself, which is dependant on obtaining additional water quality data.

Implementation will also consider the disposition of these two streams separately or combined.

The following is a decision tree of ensuing activities required to finalize the determination of BAT/AKART and its implementation:

- Obtain regulatory concurrence on the Sampling Analysis Plan (SAP)
- Conduct sampling
- Complete sample analysis and data validation

- Confirm the BAT/AKART evaluation or revise as appropriate upon receipt of SAP characterization data
- Confirm the BAT/AKART implementation site for treatment as the best alternative in time not to impact the 1995 date for ceasing discharges to the soil column
- Complete BAT/AKART Implementation Plan
- Implement BAT/AKART.

While not an integral part of this decision tree will be the preparation of NEPA documentation in support of the proposed action. The data obtained from this BAT/AKART determination and implementation process will however be used as technical input into the NEPA documentation.

The critical path in this process is obtaining regulator concurrence on the SAP and ensuing additional water quality analyses. Should this data not be available by March 1992, the next TPA Milestone M-17-15D, Submit a NPDES Permit Modification Request for the N Reactor Effluent, June 30, 1992, may be in jeopardy.

This page intentionally left blank.

APPENDIX B

PLAN FOR REROUTING 1325-N EFFLUENT TO SURFACE WATER FOLLOWING BAT/AKART

This page intentionally left blank.

APPENDIX B

PLAN FOR REROUTING 1325-N EFFLUENT TO SURFACE WATER FOLLOWING BAT/AKART

If N Reactor is the site chosen for BAT/AKART implementation the following provides an assessment of existing facilities that would likely be used in the physical rerouting of N Reactor effluent from the 1325-N Liquid Waste Disposal Facility to the Columbia River via a NPDES permitted outfall.

Rerouting of the 1325-N effluent (i.e., N Reactor effluent) to an existing surface water NPDES permitted outfall (009) following BAT/AKART is feasible as there currently exists the necessary logistical support of activities, bulk water storage capacity, and existing facilities providing necessary radiation shielding and ventilation control to preclude any release of radioactive contamination. This evaluation was based on implementing either Alternative 1 or 4 (see Sections 4.6.1 and 4.6.5, respectively). These alternatives contain the following major process components:

Alternative 1 components

- 15,000 gal batch tank
- Filter
- Evaporator
- Solids/bottoms holding tank
- Granular activated carbon filter
- Ion exchange column
- Batch discharge tanks

Alternative 4 components

- 15,000 gal batch tank
- Filter
- pH control tank
- Evaporator
- Solids/bottoms holding tank
- Equalization tank
- UV/OX treatment

- Ion exchange column
- Batch discharge tanks.

Either of these two alternative processes would draw water from the 105-N Lift Station and possibly the 105-N Fuel Basin as shown on Figure B-1. Figure B-1 also shows major N Reactor facilities. Because of the anticipated variability in liquid effluent generation rates, which are dependent on work activities being conducted, effluent will be collected in a batch tank. The 105-N Lift Station and 105-N Fuel Basin could serve this function.

Because the principal contaminants under consideration are the radionuclides, the process would be located in a facility that provides proper ventilation to prevent any release of radioactive contamination and shielding for the radiation exposure which will be inherent in the process operation. This can be accomplished by locating the treatment process inside the 105-N Basin or 107-N Basin Recirculation/Treatment facility. Both of these facilities are in close proximity of the effluent being generated. The 107-N Basin Recirculation/Treatment facility already has in-place filtration and ion exchange capacity used to remove radionuclides in the 105-N Fuel Basin but may need to be downsized for projected effluent volumes.

Batch discharge tanks, which would be used to assay the treated effluent before disposal, could make use of existing bulk water storage tanks (i.e., the 1,000,000 gal demineralized water storage tank, or the 850,000 gal filtered water storage tank).

Secondary liquid waste can be managed as other radioactive liquid waste that was generated during reactor operations (i.e., pumped to the 1314-N loadout facility for transfer to railcar or truck for transport to the 200 Area waste management facilities for final disposition).

Treated effluent disposal to the Columbia River by means of the sealwell to NPDES permitted outfall 009 can be accomplished by tieing into existing buried piping systems or installation of new piping.

In summary, collecting N Reactor effluent and rerouting it to the Columbia River following application of BAT/AKART is feasible and requires minimal configuration changes. Incorporating a BAT/AKART process within the confines of existing radiologically controlled facilities also is feasible. This plan will be finalized following finalization of the BAT/AKART evaluation which is dependent upon obtaining additional water quality data scoped in the Sampling Analysis Plan.

Figure B-1.

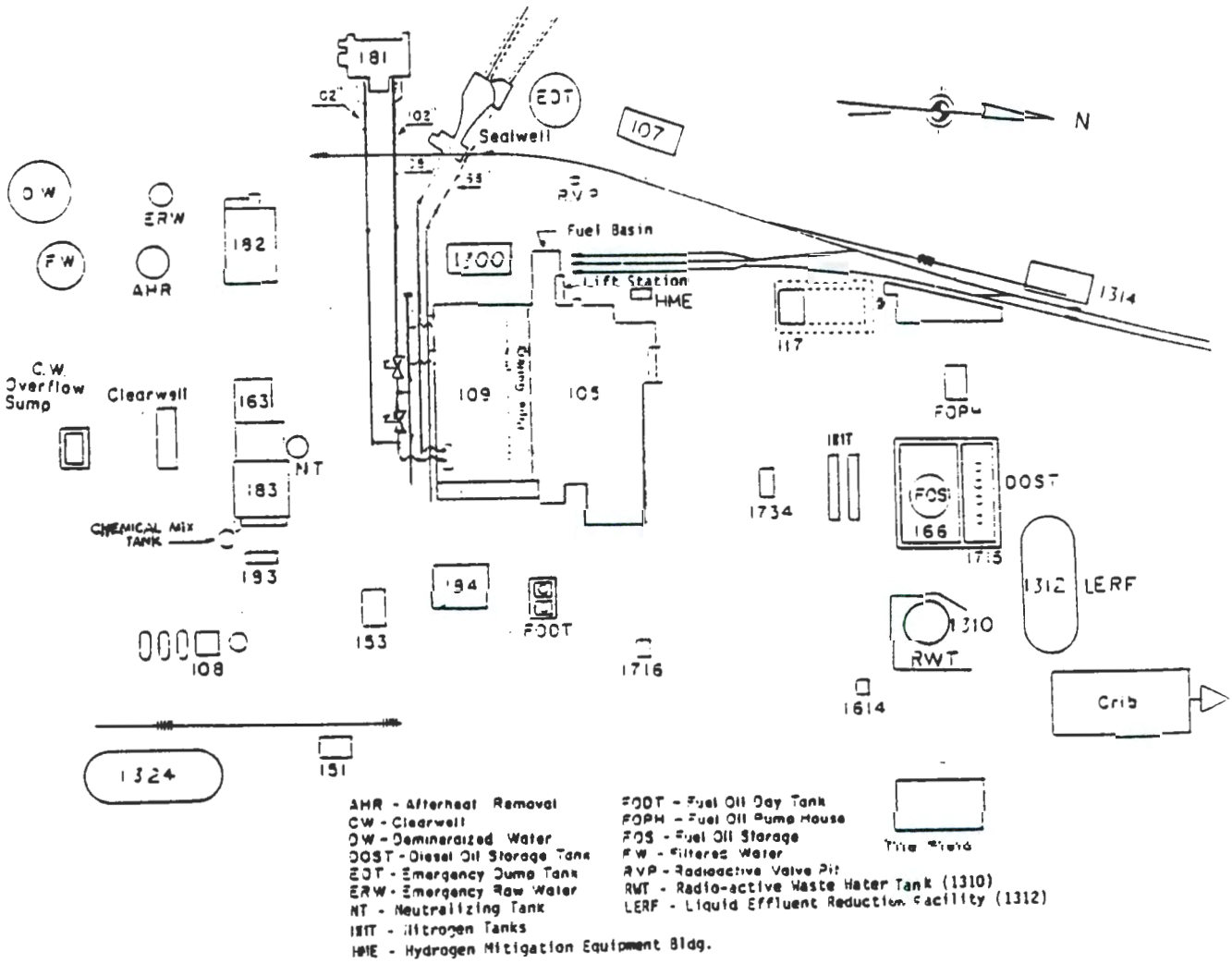
181
EDT
Sealwell
107
N
DW
ERW
FW
AHR
182
RVP
Fuel Basin
1300
Lift Station
HME
1314
117
C.W. Overflow Sump
Clearwell
163
109
105
NT
183
FOPH
NIT
FOS
166
DOST
1734
CHEMICAL Mix TANK
193
194
FODT
153
1312
LERF
1310
RWT
108
1716
1614
Crib
1324
151
AHR - Afterheat Removal
CW - Clearwell
DW - Demineralized Water
DOST - Diesel Oil Storage Tank
EDT - Emergency Dump Tank
ERW - Emergency Raw Water
NT - Neutralizing Tank
NIT - Nitrogen Tanks
HME - Hydrogen Mitigation Equipment Bldg.
FODT - Fuel Oil Day Tank
FOPH - Fuel Oil Pump House
FOS - Fuel Oil Storage
FW - Filtered Water
RVP - Radioactive Valve Pit
RWT - Radio-active Waste Water Tank (1310)
LERF - Liquid Effluent Reduction Facility (1312)