0029094

WHC-EP-0662

UC-600

Summary Report on 49 L Ferrocyanide Aerosol Tests TO208-1 and TO209-1

H. K. Fauske
Fauske and Associates, Inc.
Burr Ridge, Illinois 60521

Date Published
June 1993

Prepared for the U.S. Department of Energy
Office of Environmental Restoration
and Waste Management

Westinghouse Hanford Company P.O. Box 1970 Richland, Washington 99352

Hanford Operations and Engineering Contractor for the
U.S. Department of Energy under Contract DE-AC06-87RL10930

JUL 1993
RECEIVED
EDMC

Approved for Public Release

LEGAL DISCLAIMER

This report was prepared as an account of work sponsored by an agency of the United States Government. Neither the United States Government nor any agency thereof, nor any of their employees, nor any of their contractors, subcontractors or their employees, makes any warranty, express or implied, or assumes any legal liability or responsibility for the accuracy, completeness, or any third party's use or the results of such use of any information, apparatus, product, or process disclosed, or represents that its use would not infringe privately owned rights. Reference herein to any specific commercial product, process, or service by trade name, trademark, manufacturer, or otherwise, does not necessarily constitute or imply its endorsement, recommendation, or favoring by the United States Government or any agency thereof or its contractors or subcontractors. The views and opinions of authors expressed herein do not necessarily state or reflect those of the United States Government or any agency thereof.

This report has been reproduced from the best available copy.
Available in paper copy and microfiche.

Available to the U.S. Department of Energy
and its contractors from
Office of Scientific and Technical Information
P.O. Box 62
Oak Ridge, TN 37831
(615) 576-8401

Available to the public from the U.S. Department of Commerce
National Technical Information Service
5285 Port Royal Road
Springfield, VA 22161
(703) 487-4650

Printed in the United States of America

DISCLM-1.CHP (1-91)

Date Received: 5/3/93 TO	INFORMATION RELEASE REQUEST	Reference: WHC-CM-3-4

Complete for all Types of Release

Purpose

[] Speech or Presentation
- [] Full Paper
- [] Summary
- [] Abstract
- [] Visual Aid

(Check only one suffix)

[] Speakers Bureau
[] Poster Session
[] Videotape

[] Reference
[X] Technical Report
[] Thesis or Dissertation
[] Manual
[] Brochure/Flier
[] Software/Database
[] Controlled Document
[] Other

ID Number (include revision, volume, etc.)
~~WHC-SD-WM-TRP-134, REV. 0~~

List attachments. WHC-EP-0662

Date Release Required
April 30, 1993

Title Summary Report on 49 Liter Ferrocyanide Aerosol Tests T0208-1 and T0209-1 (FAI 93/22)

Unclassified Category UC-

Impact Level 3SQ

New or novel (patentable) subject matter? [X] No [] Yes
If "Yes", has disclosure been submitted by WHC or other company?
[] No [] Yes Disclosure No(s).

Information received from others in confidence, such as proprietary data, trade secrets, and/or inventions?
[X] No [] Yes (Identify)

Copyrights? [X] No [] Yes
If "Yes", has written permission been granted?
[] No [] Yes (Attach Permission)

Trademarks?
[X] No [] Yes (Identify)

Complete for Speech or Presentation

Title of Conference or Meeting

Group or Society Sponsoring

Date(s) of Conference or Meeting

City/State

Will proceedings be published? [] Yes [] No
Will material be handed out? [] Yes [] No

Title of Journal

CHECKLIST FOR SIGNATORIES

Review Required per WHC-CM-3-4	Yes	No	Reviewer - Signature Indicates Approval: Name (printed)	Signature	Date
Classification/Unclassified Controlled Nuclear Information	[]	[X]			
Patent - General Counsel	[X]	[]	S. W. Berglin	S W Berglin	4/30/93
Legal - General Counsel	[X]	[]	S. W. Berglin		
Applied Technology/Export Controlled Information or International Program	[]	[X]			
WHC Program/Project	[X]	[]	R. J. Cash	R J Cash	4-29-93
Communications	[X]	[]	W. P. Whiting	WPWhiting	4-30-93
RL Program/Project	[X]	[]	R. F. Christensen	RF Christensen	4/30/93
Publication Services	[X]	[]	C. J. Forbes	C.J. Forbes	6/28/93
Other Program/Project	[]	[X]			

Information conforms to all applicable requirements. The above information is certified to be correct.

	Yes	No
References Available to Intended Audience	[X]	[]
Transmit to DOE-HQ/Office of Scientific and Technical Information	[X]	[X]

Author/Requestor (Printed/Signature) Date
R. J. Cash R J Cash 4/29/93

Intended Audience
[] Internal [] Sponsor [X] External

Responsible Manager (Printed/Signature) Date
J. C. Fulton [signature] 4/29/93

INFORMATION RELEASE ADMINISTRATION APPROVAL STAMP

Stamp is required before release. Release is contingent upon resolution of mandatory comments.

APPROVED FOR RELEASE
OFFICIAL DOCUMENT
V.B.
6/28/93

Date Cancelled

Date Disapproved

LIST OF TABLES

Table No.		Page
3-1	Material Assay of In-Farm-1 Bottom Flow Sheet Sample . . .	3-1
3-2	Final As-Tested Sample Parameter	3-2
5-1	Reaction Speed Data for Test T0127-1	5-1
6-1	Comparison of Related Propagation Rate Tests	6-1

LIST OF FIGURES

Figure No.		Page
2-1	Overall test equipment configuration with 49L containment vessel and 25 mm dia. sample holder with aerosol filter and orifice unit	2-2
2-2	40 liter containment vessel	2-3
2-3	25 mm diameter sample holder used in burn velocity tests	2-4
5-1	Thermocouple response data showing reaction propagation speed for InFarm-1 bottom, dry sample, 100 μ, 60°C, 10 atm. abs., average speed is .26 cm/sec	5-2
5-2	Containment response to reaction propagation test T0127-1	5-3

TABLE OF CONTENTS

		Page
1.0	INTRODUCTION AND SUMMARY	1-1
2.0	TEST EQUIPMENT	2-1
	2.1 Reaction Ignition Source	2-1
3.0	TEST MATERIALS	3-1
4.0	TEST PROCEDURES	4-1
5.0	TEST RESULTS	5-1
	5.1 Propagation Rate Data	5-1
	5.2 Overall Containment Environment Response	5-1
	5.3 Post-Test Observations	5-4
6.0	COMPARISON WITH OTHER RELATED RESULTS	6-1
7.0	REFERENCES	7-1
APPENDIX A:	Letter from R. J. Cash to H. K. Fauske, (Ref. [1])	A-1
APPENDIX B:	Test Procedures	B-1
APPENDIX C:	Miscellaneous Test Data Records	C-1

1.0 INTRODUCTION AND SUMMARY

This report presents the results of the first test conducted in a series of tests directed by Westinghouse Hanford Company (WHC) in Ref. [1]. For the record, Ref.[1] is included as Appendix A. The test discussed in this document, designated as T0127-1, is a ferrocyanide reaction propagation rate determination test conducted under an inert argon atmosphere of 10 atm. abs. (130 psig). The test was conducted in a new 49 L containment volume described in Section 2.0. The test sample was dry In-Farm 1 bottom flow sheet material described in Section 3.0. The test protocol was similar to that described in Refs. [2 and 3]. However, as requested in Ref.[1] supplemental gas sample taking procedures were prepared and followed as described in Section 4.0 and Appendix B.

Test results showed an inverse reaction propagation velocity of ≈ 4 sec/cm. This is about 50% faster than a prior similar test conducted under 1 atm. abs. pressure. For further comparison, this burn velocity of the ferrocyanide test is also about an order-of-magnitude slower than a slow burn gun powder at 1 atm. Pre- and post-test gas samples were taken and have been forwarded to WHC for further analyses. Details of these results are presented in Section 5.0 and comparisons with other similar reaction propagation rate tests are discussed in Section 6.0.

2.0 TEST EQUIPMENT

The overall test equipment configuration is shown in Fig. 2-1. This configuration is similar to the configuration used in earlier tests, Ref. [2], but features a 49 L containment vessel. The 49 L containment vessel and environment thermocouple locations are shown in Fig. 2-2. Fig. 2-3 shows details of the 25 mm diameter sample holder. The sample holder is a 0.002 inch thick, type 316 stainless steel sheet rolled onto a 25 mm diameter mold, spot welded to hold a round tube configuration and trimmed to 4 inches in overall length. This tube (considered to be disposable) is slipped over the base stand as shown in Fig. 2-3. After the sample tube is filled with the test sample material, a spiral heater coil is positioned on the outside of the tube wall and type K thermocouples of 0.020 inch diameter are located at the indicated axial elevations.

2.1 Reaction Ignition Source

The use of a barium peroxide and aluminum mixture has proven to be an effective starter for the ferrocyanide reaction. This starter mixture can be ignited with a hot wire. The stoichiometric reaction is written as

$$\underset{(169.34)}{3BaO_2} + \underset{(26.98)}{2A\ell} \rightarrow \underset{(153.34)}{3BaO} + \underset{(101.96)}{A\ell_2O_3}$$

Numbers in ( ) under the above reaction represent the formula weights of the reactants and products. Thermochemical evaluation of this stoichiometric relation indicates a heat of reaction estimated to be -338 kcal/g-mole BaO_2 or $\approx$ 9.5 mJ/kg BaO_2. The estimated reaction temperature increase is of the order of 2000°C. This reaction is used to initiate the thermite reactions ($Fe_2O_3 + 2A\ell \rightarrow 2Fe$). The barium peroxide-aluminum reaction as written does not appear to be gassy. Barium oxide, mp 2000°C, bp 3100°C, appears to be quite stable ($A\ell_2O_3$ has a boiling point of 2900°C). However, BaO_2 is reported to decompose to Ba and O_2 at 800°C. This could be a source of gas, albeit small, for this ignition method. The barium peroxide/$A\ell$ starting

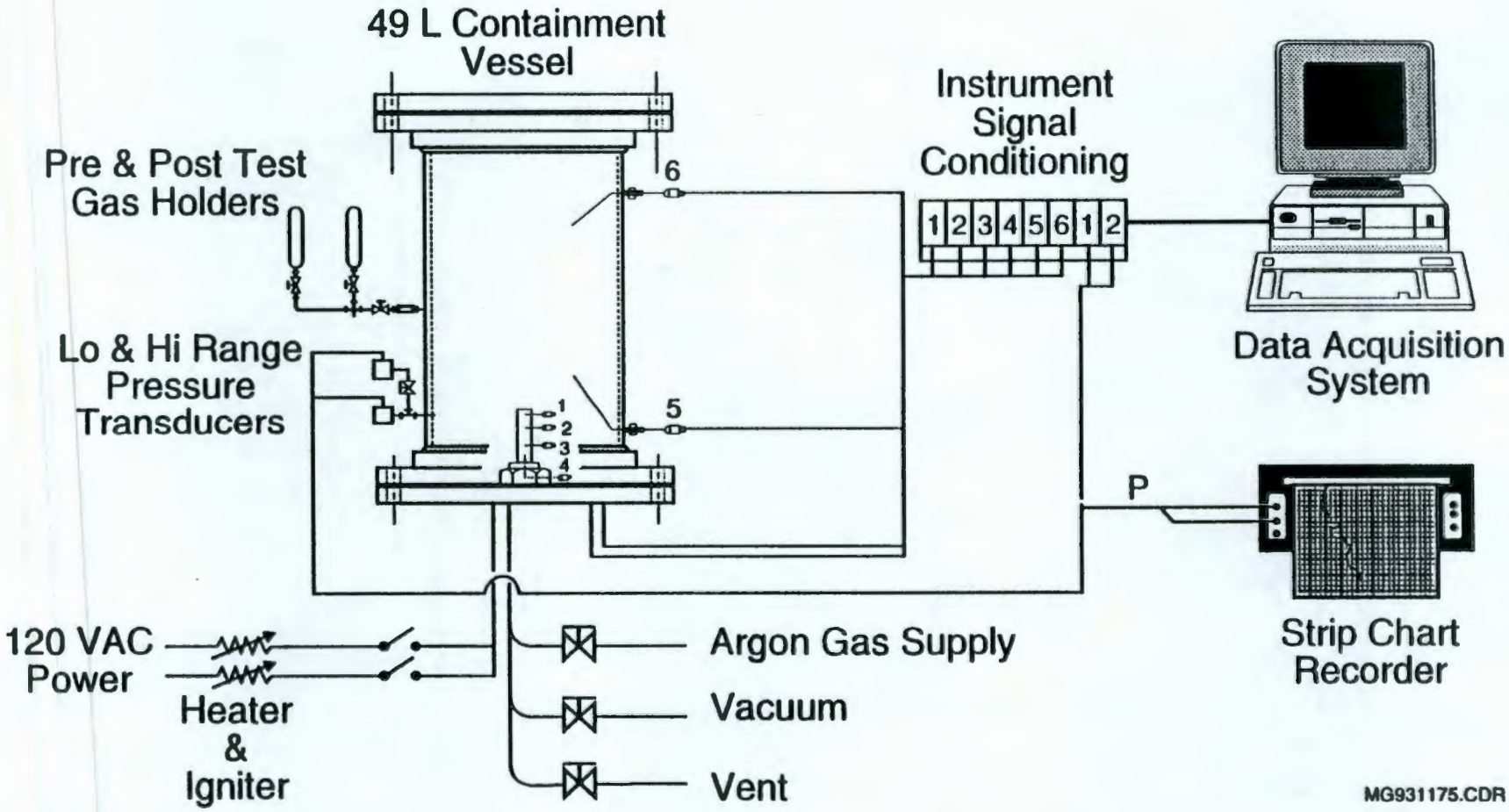

Fig. 2-1 Overall test equipment configuration with 49L containment vessel and 25 mm dia. sample holder with aerosol filter and orifice unit.

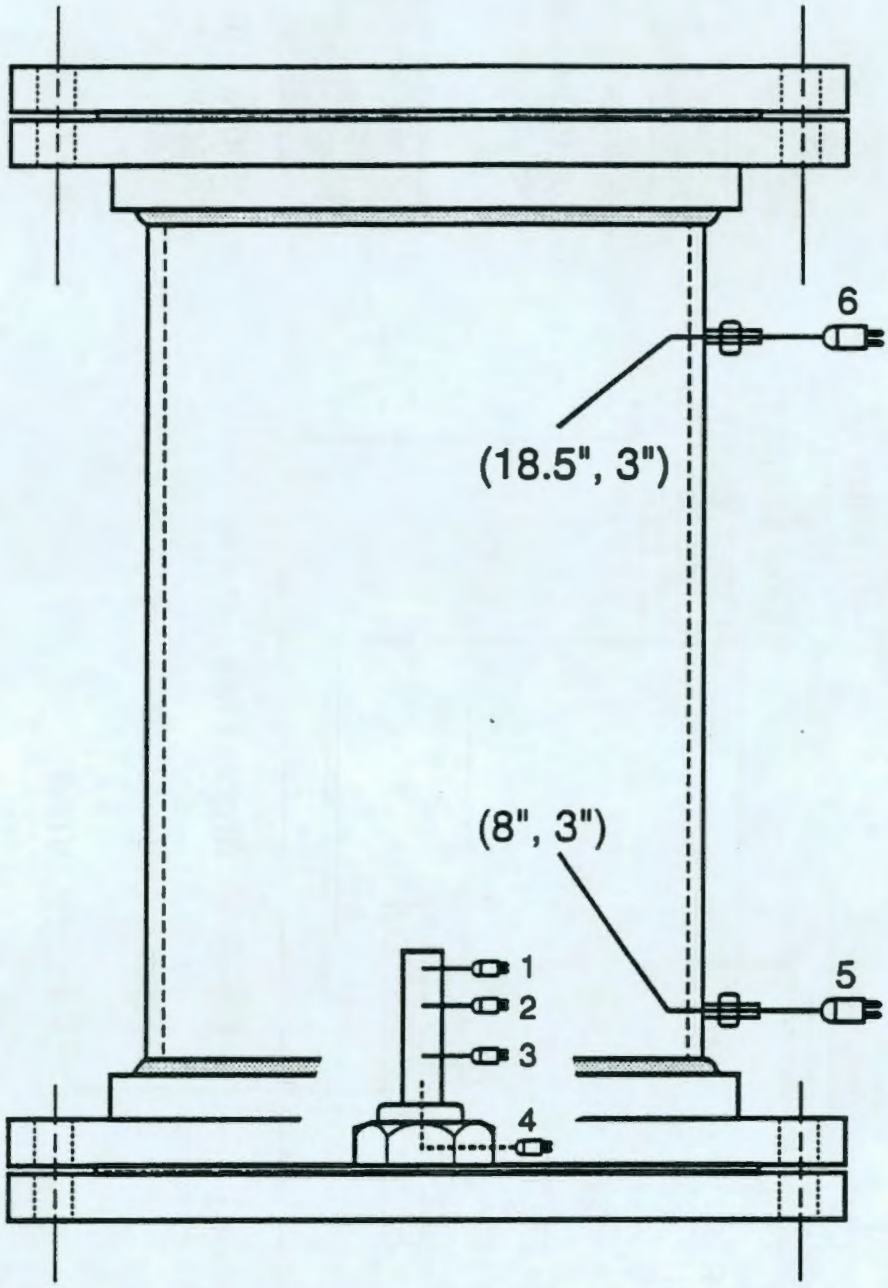

MG931169.CDR

Fig. 2-2 40 liter containment vessel.

12" ID x 0.375" wall x 26½" long with 150 lb. flanged ends as shown with 1" dia x 4" long sample holder shown to scale. (y,r) indicates TC location relative to bottom (y) and away from wall (r).

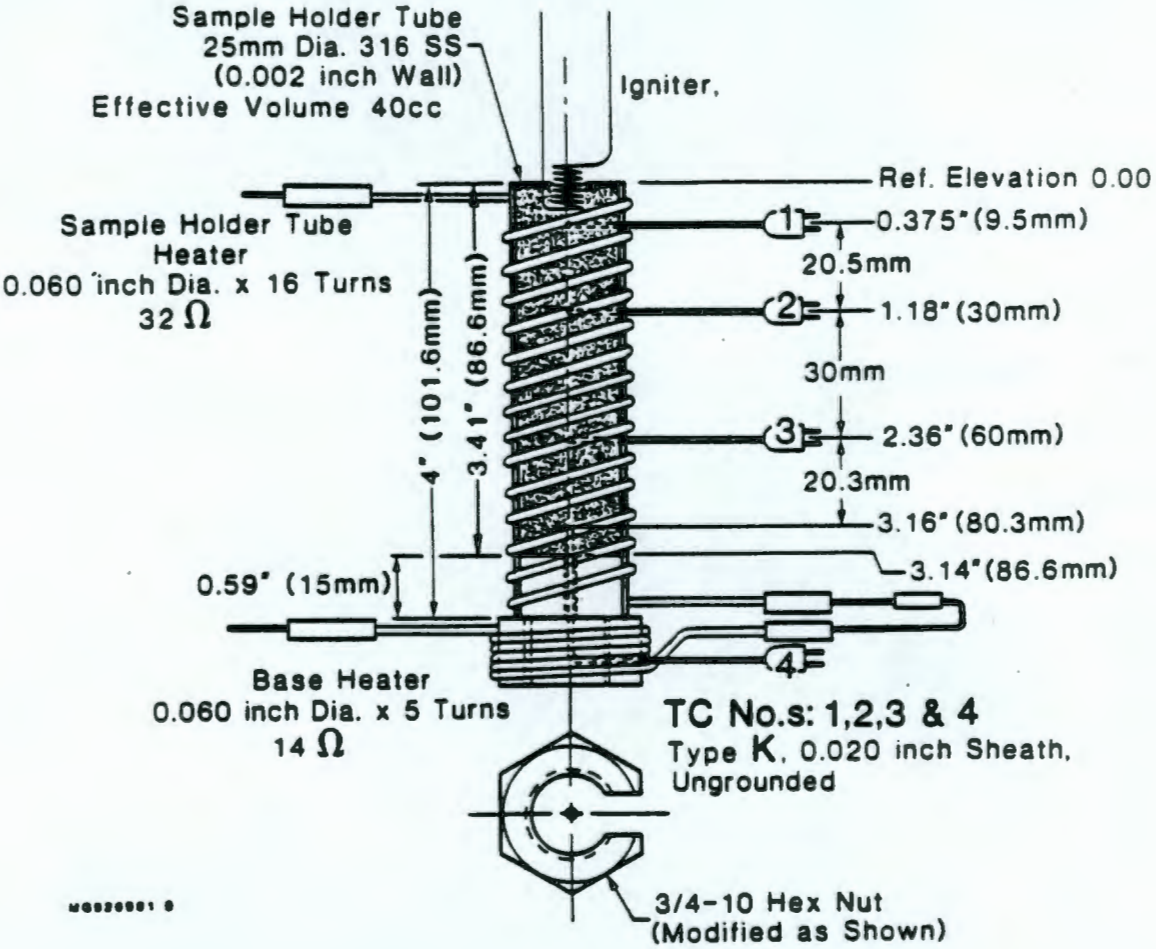

Fig. 2-3 25 mm diameter sample holder used in burn velocity tests.

mixture will be separated from the ferrocyanide column by a thin aluminum foil. The ignition method has been used, as described, in previous propagation rate studies, Ref. [2].

3.0 TEST MATERIALS

The test sample used in this test, T0127-1, was In-Farm 1 bottom flow sheet material received from WHC. The material was vacuum dried and then sieved through a 140 mesh U.S. standard screen having a 106 μ mean particle size. The test sample assay is estimated to be as stated in Table 3-1 based on information provided by WHC.

Table 3-1
Material Assay of
In-Farm-1 Bottom Flow Sheet Sample

Material	Wt. %
--$Fe(CN)_6$	26.0
$NaNO_3$	50.0
$NaNO_2$	12.2
Na_3PO_4	5.2
Na_2SO_4	3.8
NiS	2.8
TOTAL	100.0
Fuel/Oxidizer Ratio	.418

--$Fe(CN)_6$ is estimated to be 93.8% $Na_2NiFe(CN)_6$ and 6.1% $NaCsNiFe(CN)_6$.

The test sample charge was 49.7 gm packed in the sample holder to a packing density of 1.26 gm/cm^3. After the ferrocyanide sample was loaded and packed, 4 gm of barium peroxide/aluminum igniter mixture were placed in the top 1/4 inch of the sample holder in a thin aluminum foil pan.

The final as-tested sample parameters are summarized in Table 3-2 below.

Table 3-2
Final As-Tested Sample Parameters

Test Sample	InFarm-1 Bottom per Table 3-1
Water Content	Dry
Particle Size	106 μ
Sample Packing Density	1.26 gm/cm^3
Containment Pressure	10 atm abs
Sample Holder Diameter	25 mm

Pre-Test Sample Temperature:

TC1	TC2	TC3	TC4
49°C	66°C	67°C	52°C

Pre-Test Containment Volume Temperature and Pressure:

TC5	TC6	P
21°C	21°C	133.5 psig

In addition to the physical test sample parameters, Table 3-2 lists the actual pre-ignition test conditions as recorded just prior to the sample burn.

4.0 TEST PROCEDURES

Procedures identified in Ref. [3] and Appendix B were followed in the conduct of the test. Pre- and post-test containment volume gas samples were taken, identified and forwarded to WHC for further analysis.

5.0 TEST RESULTS

5.1 Propagation Rate Data

The thermocouple data which indicate the linear reaction velocity are shown in Fig. 5-1. Table 5-1 indicates the various speed measurements which can be obtained from these data.

Table 5-1
Reaction Speed Data for Test T0127-1

TC#	Location mm	Time sec	Reaction Propagation Rate			
TC1	9.53	14.5	TC1 → TC2 2.52 mm/sec			
TC2	30.16	22.7		TC2 → TC3 2.91 mm/sec		
TC3	59.53	32.8			TC3 → TC4 2.30 mm/sec	
TC4	81.85	42.5				TC1 → TC4 2.58 mm/sec

An overall average reaction velocity in the 25 mm diameter sample holder at 10 atm. abs. is ≈ 0.26 cm/sec. (15.6 cm/min).

5.2 Overall Containment Environment Response

Fig. 5-2 provides the overall containment pressure and temperature response. The location in time for the post-test gas sample is shown in Fig. 5-2.

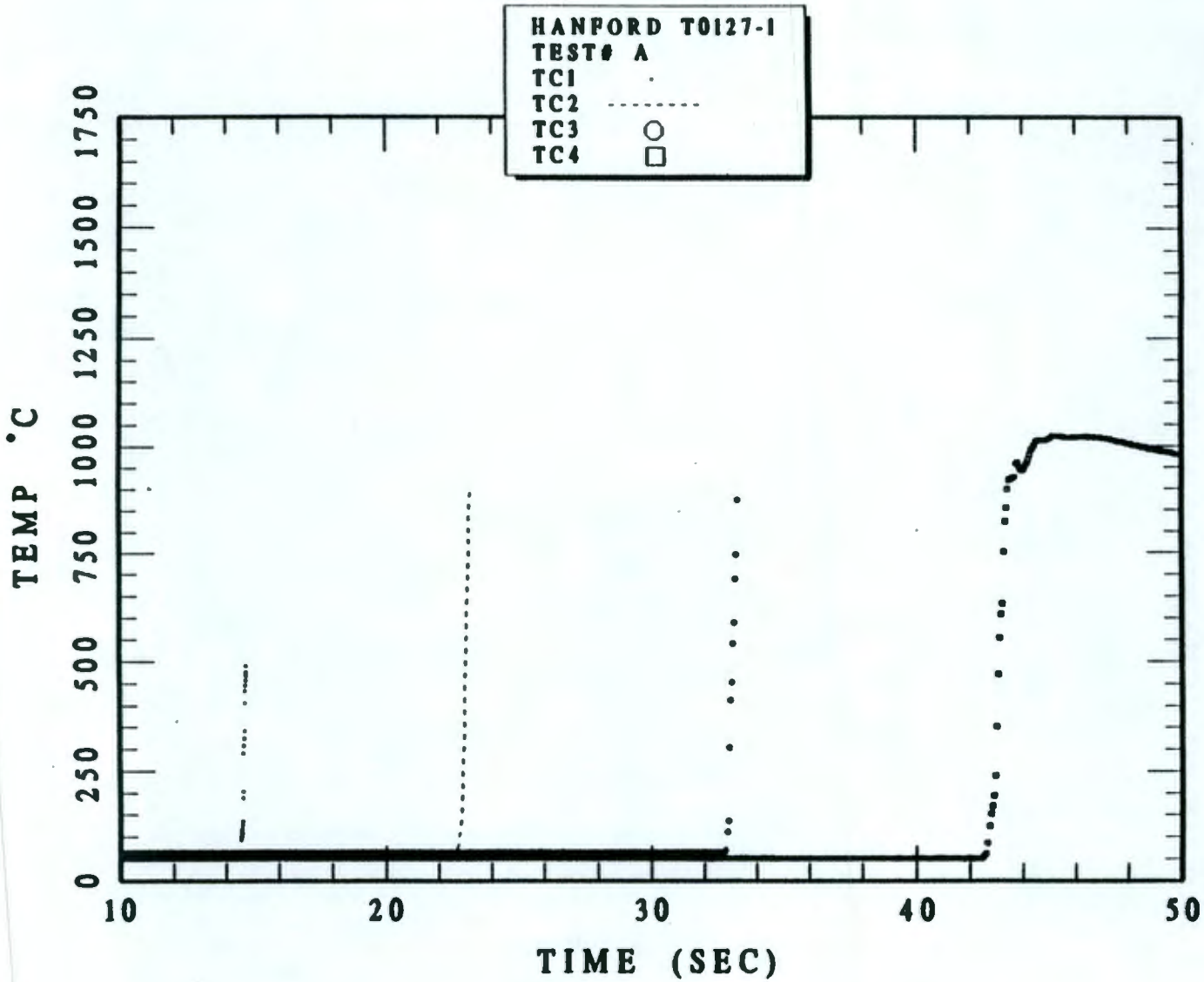

TIME VS TC1, TC2, TC3, TC4

Fig. 5-1 Thermocouple response data showing reaction propagation speed for InFarm-1 bottom, dry sample, 100 μ, 60°C, 10 atm. abs. average speed is .26 cm/sec.

5.3 Post-Test Observations

The sample appeared to burn very hot. Significant charring of the sample holder was evident. A fine white powder residue was uniformly deposited on the floor (12" dia) of the containment vessel, but not on the top or side walls.

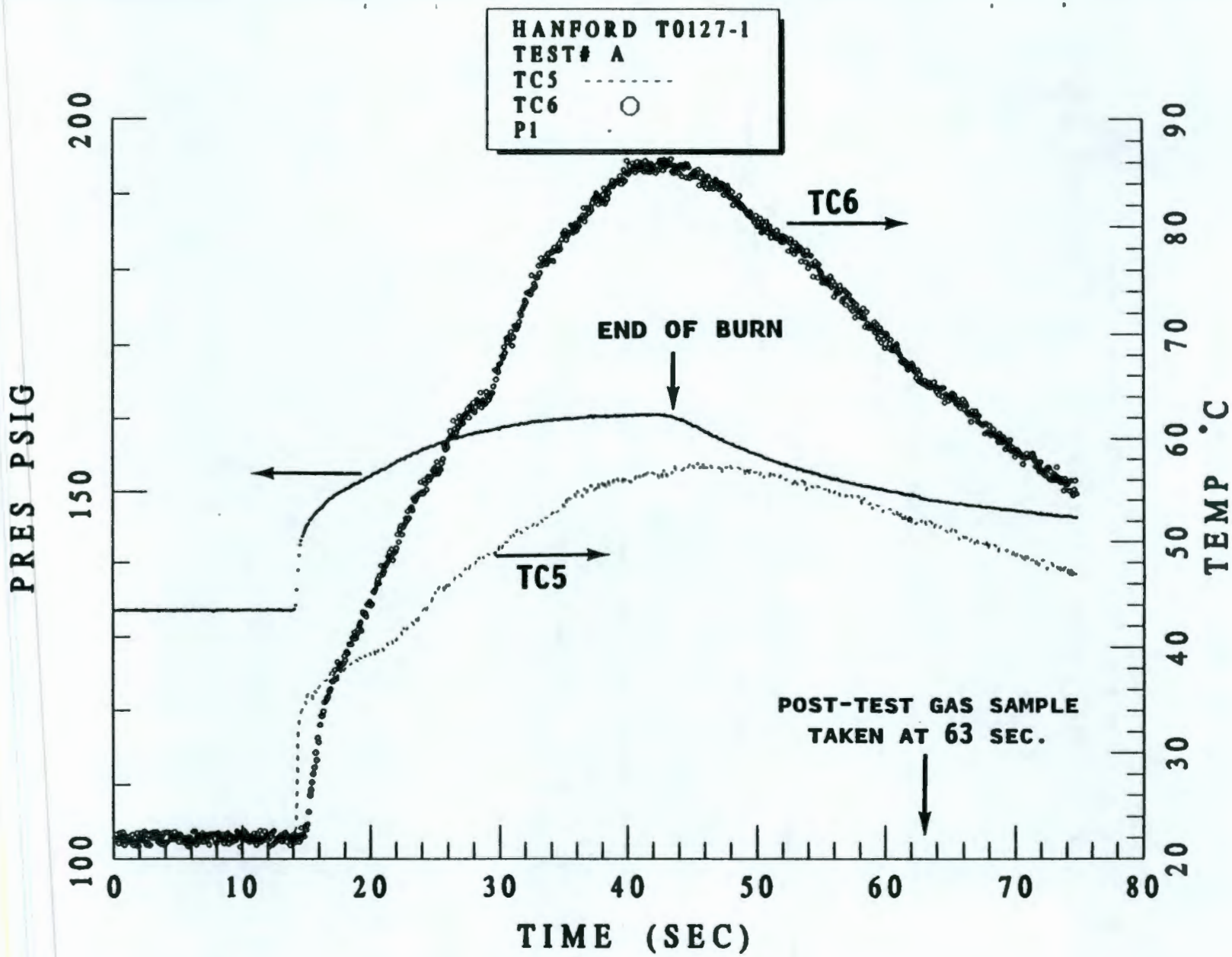

TIME VS. P, TC5, TC6

Fig. 5-2 Containment response to reaction propagation test T0127-1.

6.0 COMPARISON WITH OTHER RELATED RESULTS

Table 6-1 shows a comparison of results from the present test T0127-1 with other In-Farm 1 bottom reaction rate results previously reported in Ref. [4].

Table 6-1
Comparison of Related Propagation Rate Tests

Test	Material	Pressure atm	Initial Temperature °C	Specific Gravity	Reaction Propagation Rate cm/min
T0727-1	IF1B	1	26	1.23	10
*T0127-1	IF1B	10	60	1.26	16
T0819-1	VWW	50	60	1.25	132

*Subject of this report.
IF1B - In-Farm 1 bottom flow sheet material.
VWW - Vendor supplied material.

7.0 REFERENCES

1. Letter; R. J. Cash to H. K. Fauske, "Subject: Aerosol Propagation Tests and Parametric Pressure Propagation Test", January 12, 1993.

2. FAI/92-66 (Revised), "Test Plans and Procedures for Determination of Reaction Propagation Velocity in Sodium Nickel Ferrocyanide Compounds", July, 1992.

3. FAI/92-81, "Adiabatic Calorimetry and Reaction Propagation Rate Tests with Synthetic Ferrocyanide Materials Including UPlant-1, UPlant-2, In-Farm 1, In-Farm 2, and Vendor-Procured Sodium Nickel Ferrocyanide", July, 1992.

4. Letter; H. K. Fauske to R. J. Cash, Subject: "Status Report on Reaction Propagation Rate Tests with Synthetic Sodium Nickel Ferrocyanide Material", September 21, 1993.

APPENDIX A

Letter from R. J. Cash to H. K. Fauske (Ref. [1])

Westinghouse
Hanford Company

P.O. Box 1970 Richland, WA 99352

January 12, 1993 9350199

Dr. H. K. Fauske, President
Fauske and Associates, Inc.
16W070 West 83rd Street
Burr Ridge, Illinois 60521

Dear Dr. Fauske:

AEROSOL PROPAGATION TESTS AND PARAMETRIC PRESSURE PROPAGATION TEST

Please conduct two aerosol tests and one parametric propagation test for the Ferrocyanide Safety Program at Hanford. The aerosol tests are expected to give a reasonable release fraction of aerosol particles from reaction of the most concentrated ferrocyanide waste simulant, In-Farm-1. The parametric pressure propagation test will give a propagation rate measurement for an intermediate pressure.

Perform the first aerosol release test using In-Farm-1 bottom fraction test material in a similar configuration as the propagation tests, except the aerosol tests shall be conducted in the 49 liter chamber. Use vacuum dried In-Farm-1 simulant to which 1 wt% water is added and well mixed in order to permit possible conversion of the cesium to cesium hydroxide during the reaction. Include thermocouples in the test material and within the chamber atmosphere to measure the propagation rate and containment gas/temperature responses. Perform the first test at three (3) atmospheres initial absolute pressure under argon with delayed exhaust gas venting through a filter to collect aerosol as shown in Figure 1. Other parameters should be as follows: a 25 mm diameter test material cylinder about 100 mm long, a 60 °C initial temperature, dried material (reconstituted to 1 wt% water) screened through a 140 mesh screen, and a specific gravity of about 1.2 (actual density measured).

Venting of the chamber gas should begin when the reaction is completed as determined by the temperature of the lowest thermocouple and first decrease in chamber pressure after the reaction is started (estimated to be about 30 seconds after start of the reaction). Controlled venting down to atmospheric pressure, through an orifice upstream of the filter housing, will protect the filter system and provide favorable conditions for obtaining a good aerosol sample. The orifice should be sized to control a maximum flow through the filter of 0.5 cfm. It is important that Westinghouse Hanford Company (WHC) simulant be used instead of vendor-produced material because the WHC simulant has traceable cesium in it and the vendor material does not.

Hanford Operations and Engineering Contractor for the US Department of Energy

Photographs are requested of the deposits inside of the chamber after the test. The filter papers and O rings from the aerosol filter should be weighed (to four significant figures) before and after aerosol loading to determine the mass of aerosol collected. (Rental of a balance, as necessary, to make these measurements is approved.) Quartz filter papers will be used and should be handled with tweezers only, since sodium can be picked up from human hands. Filter paper holders have been provided to you for handling and shipping purposes.

It is desirable to make a material balance on the cesium and other metallic elements during this test. The inside of the chamber should be lined with aluminum foil to collect any cesium plate-out on exposed surfaces. The aerosol should be removed from the vent gas by filtering, and all of the remaining solid reaction products should be weighed. The gas samples, loaded filter paper, solid reaction products, and foil liner should be returned to WHC for analysis as soon as possible after completion of each test.

Perform the second aerosol test at an initial temperature of 120 °C but with all other conditions kept the same as the first test; the same data measurements should be made. It is expected that the 1 wt % water added to the test material will be retained within the sample at 120 °C up to the point of ignition of the second test reaction.

Please submit the aerosol propagation test procedure for WHC approval prior to conducting these tests.

It is requested that you perform one additional propagation test at an initial pressure of 10 atmospheres absolute using an argon environment. Use dry (0 wt% water) In-Farm-1 bottom fraction material for this test, the 25 mm diameter test bed, an initial temperature of 60 °C, a specific gravity of about 1.2 (actual density measured), and a particle size as screened through a 140 mesh screen. This test can be conducted in the 49 liter chamber, if you choose. Obtain a gas sample of the containment atmosphere before and after the reaction. Please provide a detailed gas sampling procedure for approval prior to conducting this test. Use of the WHC-provided samplers (NUPRO) with end caps to provide a second seal and to protect threaded connections is requested. Please report the results of these tests, including the temperatures of the chamber gas as a function of time, in a summary report, available for public release.

Please provide measured gas temperatures within the containment atmosphere (and provide the location of the thermocouples) as a function of time for each propagation test conducted to date with the disodium mononickel ferrocyanide mixtures. The gas temperatures and pressure measurements during the reaction time and during cooling time are desired. Temperature and pressure measurements of the containment gas atmosphere are also needed at the time that the gas samples were/are obtained. Your prompt response to this request for tests completed to date would be appreciated.

About 1.4 kg of additional In-Farm-1 bottom fraction simulant material was shipped to you on January 5, 1993. The composition of the In-Farm-1 bottom fraction simulant is still being determined by laboratory analysis and will be provided to you in the near future so that the final six screening propagation tests can be conducted. About one Kg of U-Plant-1 sludge will be prepared and shipped to you for the bake out tests discussed at the December 9 and 10, 1992 meeting at Hanford. Additional gas sampler (NUPRO) containers are also being shipped to you.

For your information the gas analysis of the containment atmosphere gases for four propagation tests conducted previously are listed in Table 1. It should be noted that analytical results of two of the pretest samples indicate that there is a concern about the initial condition of the test chamber atmosphere. Either the gas sampling was not conducted properly or the containment atmosphere was not adequately purged. See footnotes of Table 1.

Please address questions to D. W. Jeppson at (509) 376-6058 or to me at (509) 373-3132.

Very truly yours,

R. J. Cash, Manager
Ferrocyanide Safety Technology
Tank Waste Remediation System

fm

TABLE 1

Gas Analysis of Containment Gases for Propagation Tests

Sample	Mole %											
	CO_2	Ar	O_2	N_2	CO	He	H_2	CH_4	N_2O	NO	NO_2	SO_2
T0820-1-Pre	<0.01	99.99	<0.01	0.003	<0.10	<0.01	<0.01	<0.01	<0.01	<0.01	<0.01	<0.01
T0820-1-After	1.08	95.4	0.26	3.26	<0.10	<0.01	<0.01	<0.01	<0.01	0.02	<0.01	<0.01
T0821-1-Pre	0.02	92.1	1.62	6.27	<0.10	<0.01	<0.01	<0.01	<0.01	<0.01	<0.01	<0.01
T0821-1-After	14.8	24.2	0.04	45.7	<0.10	<0.01	0.03	<0.01	<0.01	15.3	<0.01	<0.01
T0825-1-Pre*	0.10	54.6	9.21	36.1	<0.10	<0.01	<0.01	<0.01	<0.01	<0.01	<0.01	<0.01
T0825-1-After	3.90	84.8	0.09	11.2	<0.10	<0.01	0.01	<0.01	<0.01	0.01	<0.01	<0.01
T0826-1-Pre	<0.01	99.98	<0.01	0.02	<0.02	<0.01	<0.01	<0.01	<0.01	<0.01	<0.01	<0.01
T0826-1-After	0.61	97.5	0.03	1.75	<0.10	<0.01	0.02	<0.01	<0.01	0.01	<0.01	<0.01

* This sample bottle (FAI supplied) was at low pressure and the valve was reported by the analytical laboratory to be leaking.

Note: Sample T0821-1-Pre results may imply that adequate purging of the chamber was not done prior to performance of the test.

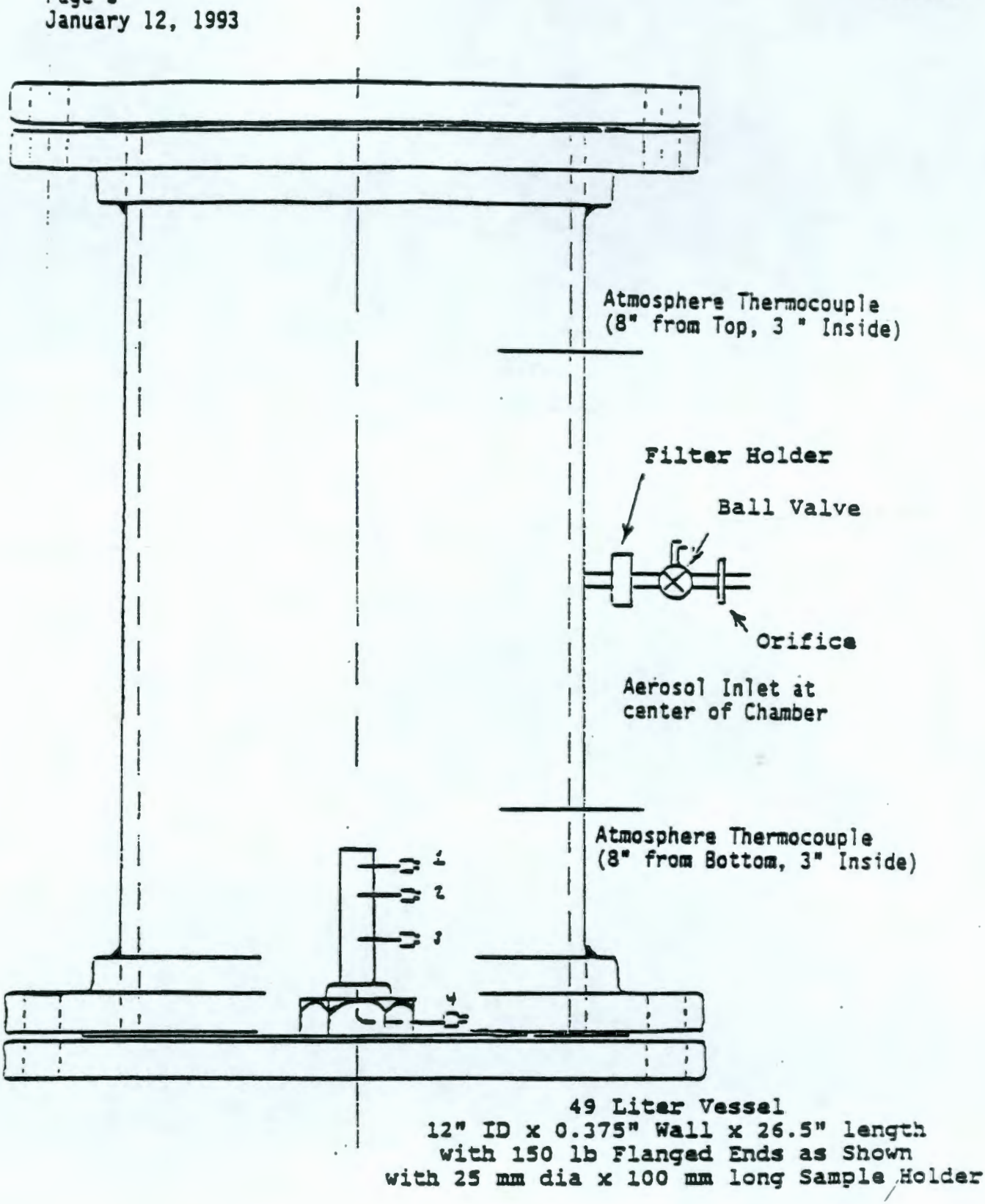

Figure 1
Aerosol Test Containment Vessel

APPENDIX B

Test Procedures

SUPPLEMENTAL PROCEDURE FOR TAKING PRE- AND POST-TEST TEST CELL CONTAINMENT GAS SAMPLE

(REVISED: 26 Jan 93)

1.0 INTRODUCTION

This operating procedure covers the taking of test cell containment gas samples for ferrocyanide reaction rate propagation tests conducted for Westinghouse Hanford Company and supplements the general test procedures as defined in Ref. [1]*. The procedure is designed to provide consistency and uniformity in the gas sample taking operations and minimize the potential for unwanted leakage or other sources of loss of data.

2.0 PROCEDURE

This procedure is subdivided into four parts. Part 1 defines the pre-test sample cylinder preparations and test cell containment purge. Part 2 define the pre-test gas sample taking activity. Part 3 defines the post-test sample taking activity. Part 4 covers the gas sample identification procedures.

2.1 PRE-TEST PREPARATIONS

Use only gas sample container provided by Westinghouse Hanford Company (NUPRO style with special end caps) for this purpose. The test cell and gas sample installation will be configured as shown in Fig. 2.1-1. However, prior to achieving this configuration both the containment volume and the gas sample cylinder connection lines must be prepared and checked for leak tightness.

---

*. FAI/92-66 (Revised), "Test Plans and Procedures for Determination of Reaction Propagation Velocity in Sodium Nickel Ferrocyanide Compounds", (July, 1992).

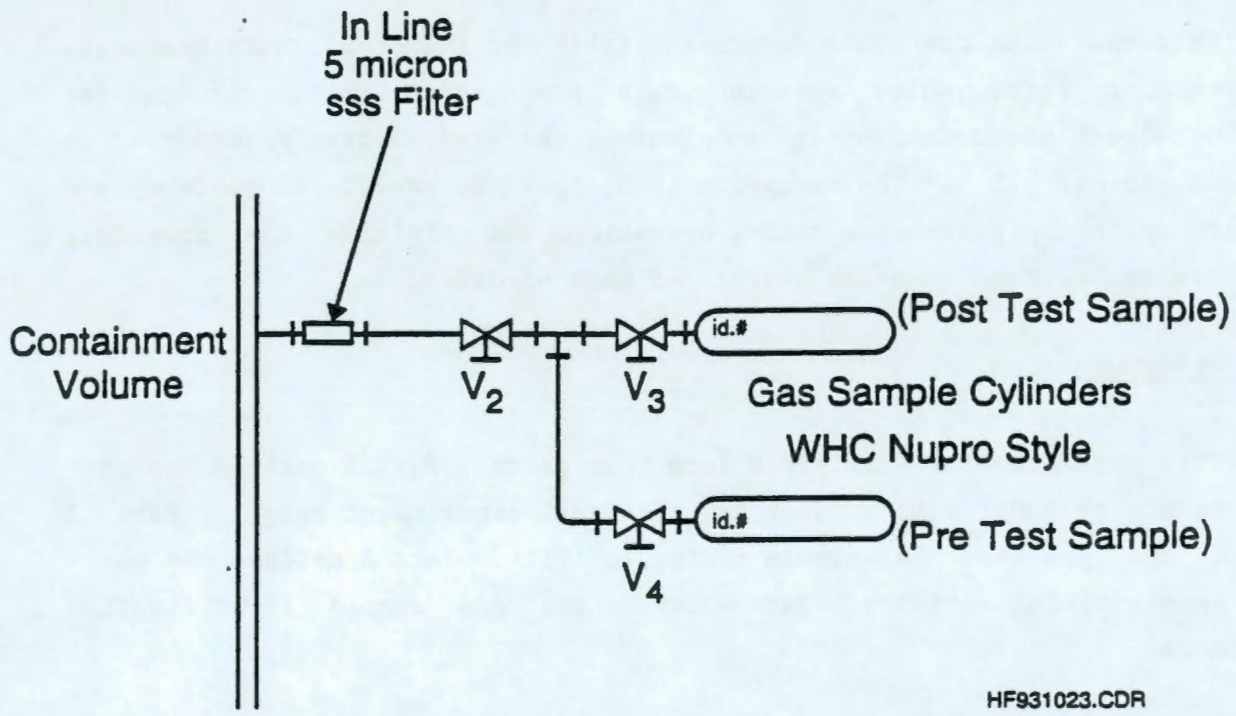

Figure 2.1-1 Installed gas sample cylinders.

2.1.1 GAS SAMPLE CYLINDER

See attachment 1

(1) Label gas sample cylinder and valve.

Label ID _____

Date of this verification _____ ☐

(2) Prior to test purge two cylinders for each test for five cycles and for each cylinder end the last cycle with a 30 min evacuation:

(2.1) Label each gas sample cylinder with test ID number and designated pre- and post-test sample. ☐

(2.2) Purge and evacuate with gas sample cylinder configured according to Fig. 2.1-2. ☐

MIN	VACUUM HOLD TIME			CYCLE	VACUUM	FILL
10	_____	to	_____	1	_____	____
10	_____	to	_____	2	_____	____
10	_____	to	_____	3	_____	____
10	_____	to	_____	4	_____	____
30	_____	to	_____	5	_____	X

(2.3) At end of purge, cap gas sample cylinder until ready for use.

2.1.2 CONTAINMENT VOLUME

The containment volume fittings and flanges should be checked for leak tightness at some time prior to testing. This section of the procedure assures a proper argon test atmosphere and verifies the leak tight status.

Prior to the test (propagation reaction rate test) the containment volume should be 99.9% argon or better and be set at the prescribed test pressure. Since on-site analysis of the containment environment is not

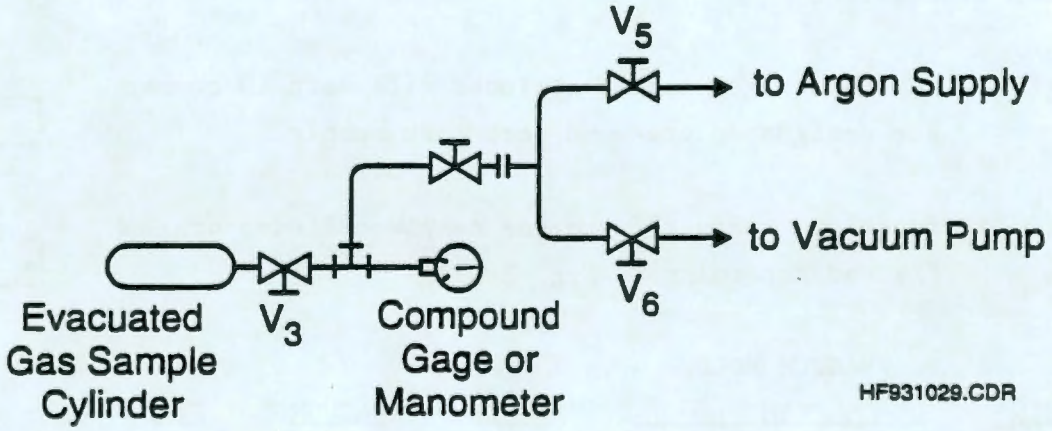

Figure 2.1-2 Configuration of gas sample cylinder for purging and final evacuation.

possible, the desired argon atmosphere will be established by a five cycle evacuation and argon fill procedure.

Purging of the containment volume should be completed just prior to the test activities. The purge configuration is shown in Fig. 2.1-3. The purge procedure is as follows:

(1) Attach prepared gas sample cylinders to valve V2 per Fig. 2.1-3.

(2) Set up for purge per Fig. 2.1-3. ☑

Valve Configuration -

V1	Open
V2	Open
V3 & V4	Closed
V5 & V6	Used for purge cycles
V7 & V8	Open

(3) Purge cycle - record pressure readings. ☑

CYCLE	VACUUM	FILL
1	_____	____
2	_____	____
3	_____	____
4	_____	____
5	_____	____

(4) At end of purge cycle: Close V2 and V7 remove manometer or low range pressure transducer and cap valve, V7. ☑

(5) Pressure containment to test pressure and check for leaks - must hold pressure within 2% for 1 hr (Note: if leaks are discovered and cannot be fixed at pressure, reduce pressure, fix leak and repeat purge procedure). ☑

See attatchment 1

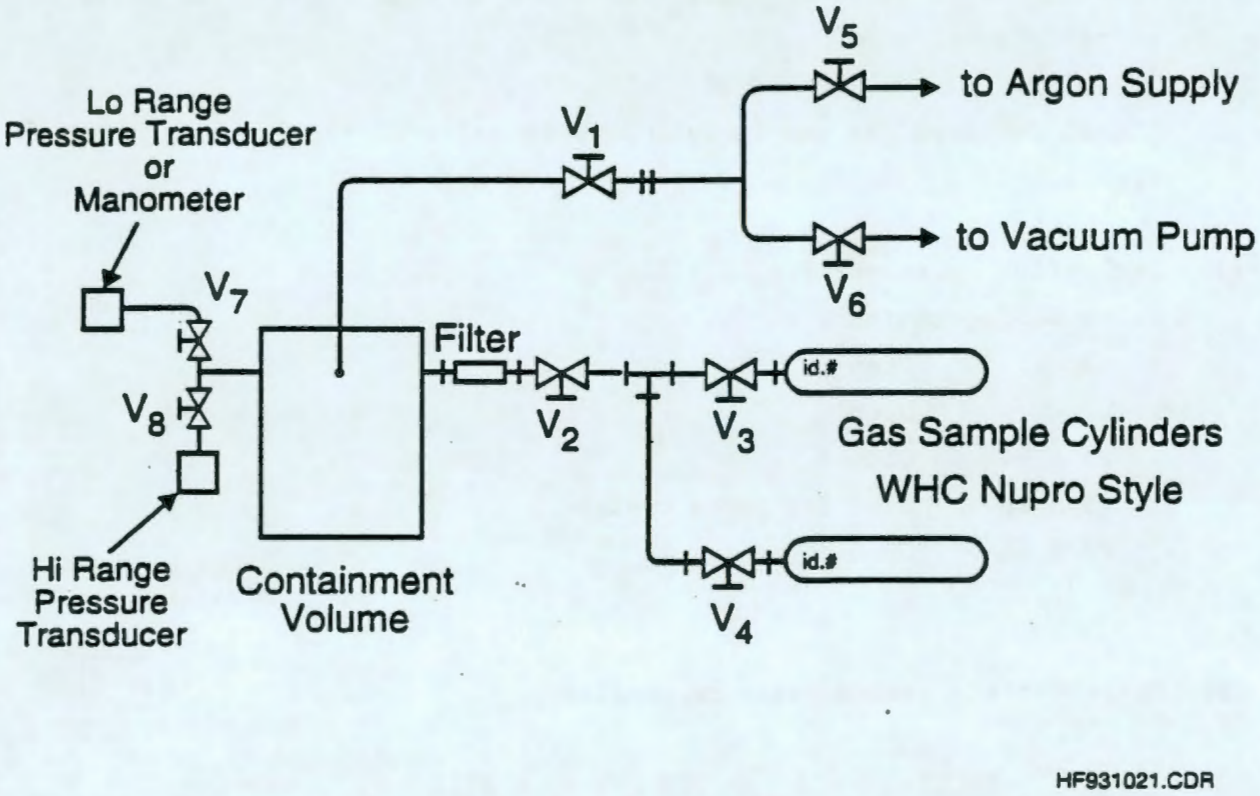

Figure 2.1-3 Configuration of test apparatus for purging.

2.2 PRE-TEST GAS SAMPLE TAKING ACTIVITY

(1) Containment vessel is leak tight and at pressure. ☑

Record: Pressure 134 °C

Temperature 21 °C

(2) Open V2 and V3 - hold open for 30 sec. ☑

(3) Record containment vessel. ☑

Record: Pressure 133.5 psig

Temperature 21 °C

(4) Close V2 and V3. Adjust containment vessel pressure if required. ☑

non reqd.

~~(5) Remove and cap gas sample cylinder.~~ ☑

(6) Attach properly labeled post-test gas sample cylinder to test apparatus per Fig. 2.1-1. ☑

(7) Run test per established test plan. ☑

2.3 POST-TEST GAS SAMPLE ACTIVITY

(1) After test burn is verified as soon as practical - ☑

Record: Time After Start of Test 48 sec

18 sec after burn completed

Pressure 149 psig ☑

	TC5	TC6
Temperature	50 °C	68 °C

(2) Open V2 and V3 - hold open for 30 sec.

(3) Record containment vessel -

Pressure 149 psig

Temperature SAME

(4) Close V2 and V3.

(5) Remove and cap gas sample cylinder.

2.4 IDENTIFICATION VERIFICATION

Verify pre- and post-test gas sample identification and transfer data to following summary table.

GAS SAMPLE SUMMARY DATA SHEET

TEST ID T0127-1 DATE 27 Jan 93

PRE-TEST GAS SAMPLE:

(a) Gas Sample Cylinder Identification: FA1 1

(b) Cylinder Volume: 50 cc

(c) Test Label as Shipped: TEST 0127-1 PRE test gas sample // Container at 135 psig

(d) Pre-Sample Pressure: Vac ≈ 1" Hg ± ½" Hg also argonne purge

(e) Containment Volume:

	Pressure	Temperature	
Before Sample:	134 psig	21 °C	TC5 & TC6
After Sample:	133.5 "	21 °C	" "

POST-TEST GAS SAMPLE:

(a) Gas Sample Cylinder Identification: FA1 2

(b) Cylinder Volume: 50 cc

(c) Test Label as Shipped: Test T0127-1 A POST TEST GAS SAMPLE Cylinder Pressure 140 psig IN FARM 1 BOTTOM BURN

(d) Pre-Sample Pressure: Same as (d) above

(e) Containment Volume:

	Pressure	Temperature	
Before Sample:	144 psig	40 °C 41 °C	TC5 & TC6
After Sample:	144	" "	" "

2.1.1 GAS SAMPLE CYLINDER

(1) Label gas sample cylinder and valve.
Label ID (FAI-1) PRETEST SAMPLE A
Date of this verification 26 Jan '93 ☑

(2) Prior to test purge two cylinders for each test for five cycles and for each cylinder end the last cycle with a 30 min evacuation:

(2.1) Label each gas sample cylinder with test ID number and designated pre- and post-test sample. ☑

(2.2) Purge and evacuate with gas sample cylinder configured according to Fig. 2.1-2. ☑

min	Vacuum Hold Time			CYCLE	VACUUM	FILL
0	09:50	to	10:00	1	28"	10 PSIG
0	10:01	to	10:11	2	28"	10 PSIG
0	10:12	to	10:25	3	28	10 PSIG
10	10:26	to	10:37	4	28"	10 PSIG
30	10:38	to	11:15	5	28"	X

(2.3) At end of purge, cap gas sample cylinder until ready for use. Hold

---

2.1.2 CONTAINMENT VOLUME

The containment volume fittings and flanges should be checked for leak tightness at some time prior to testing. This section of the procedure assures a proper argon test atmosphere and verifies the leak tight status.

Prior to the test (propagation reaction rate test) the containment volume should be 99.9% argon or better and be set at the prescribed test pressure. Since on-site analysis of the containment environment is not

2.1.1 GAS SAMPLE CYLINDER

(1) Label gas sample cylinder and valve.
Label ID (FAI-2) POST TEST SAMPLE A
Date of this verification 26 Jan 93 ☑

(2) Prior to test purge two cylinders for each test for five cycles and for each cylinder end the last cycle with a 30 min evacuation:

(2.1) Label each gas sample cylinder with test ID number and designated pre- and post-test sample. ☑

(2.2) Purge and evacuate with gas sample cylinder configured according to Fig. 2.1-2. ☑

min	Vacuum Hold Time			CYCLE	VACUUM	FILL
10	11:25	to	11:38	1	28"	10 PSIG
10	11:40	to	11:53	2	28"	10 PSIG
10	11:54	to	12:08	3	28"	10 PSIG
10	12:10	to	12:23	4	28"	10 PSIG
30	12:24	to	13:10	5	28"	X

(2.3) At end of purge, cap gas sample cylinder until ready for use.

Hold

2.1.2 CONTAINMENT VOLUME

The containment volume fittings and flanges should be checked for leak tightness at some time prior to testing. This section of the procedure assures a proper argon test atmosphere and verifies the leak tight status.

Prior to the test (propagation reaction rate test) the containment volume should be 99.9% argon or better and be set at the prescribed test pressure. Since on-site analysis of the containment environment is not

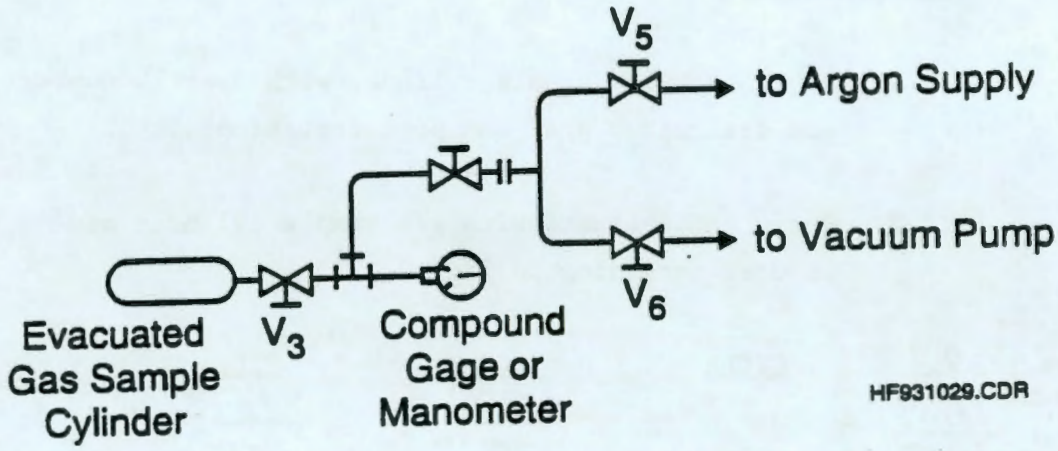

Figure 2.1-2 Configuration of gas sample cylinder for purging and final evacuation.

TEST A

possible, the desired argon atmosphere will be established by a five cycle evacuation and argon fill procedure.

Purging of the containment volume should be completed just prior to the test activities. The purge configuration is shown in Fig. 2.1-3. The purge procedure is as follows:

(1) Attach prepared gas sample cylinders to valve V2 per Fig. 2.1-3.

(2) Set up for purge per Fig. 2.1-3. ☑

Valve Configuration -

V1	Open
V2	Open with end capped
V3 & V4	Closed
V5 & V6	Used for purge cycles
V7 & V8	Open

(3) Purge cycle - record pressure readings. ☑

CYCLE	VACUUM	FILL
1	26"	10 PSIG
2	26"	10 PSIG
3	26"	10 PSIG
4	26"	10 PSIG
5	26"	134.0 ← 130 psig

(4) At end of purge cycle: Close V2 and V7 remove manometer or low range pressure transducer and cap valve, V7. ☑

(5) Pressure containment to test pressure and check for leaks - must hold pressure within 2% for 1 hr (Note: if leaks are discovered and cannot be fixed at pressure, reduce pressure, fix leak and repeat purge procedure). ☑

APPENDIX C

Miscellaneous Test Data Records

Data Sheet Form L-001
Reaction Propagation Test

Date	27 Jan 93
Test ID	T 0127-1
Material	1N Form 1 Bottom
Fill Height	See attached Sheet
Mass	49.7 gm
Initial Pressure	130 psig nominal
Initial Temperature	60 °C nominal
Final Pressure	See Test Data
Final Gas Temperature/Time	See data /
Test Configuration	See data sheet

			Time, if yes
Gas Sample	Yes ☒	No ☐	
Residue Sample	Yes ☒	No ☐	

Test Notes Test conducted in 49 L test vessel. Operation satisfactory.

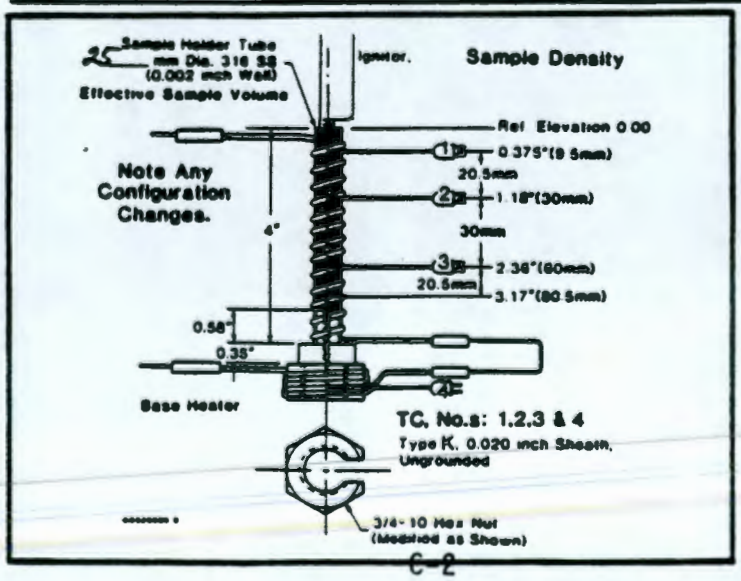

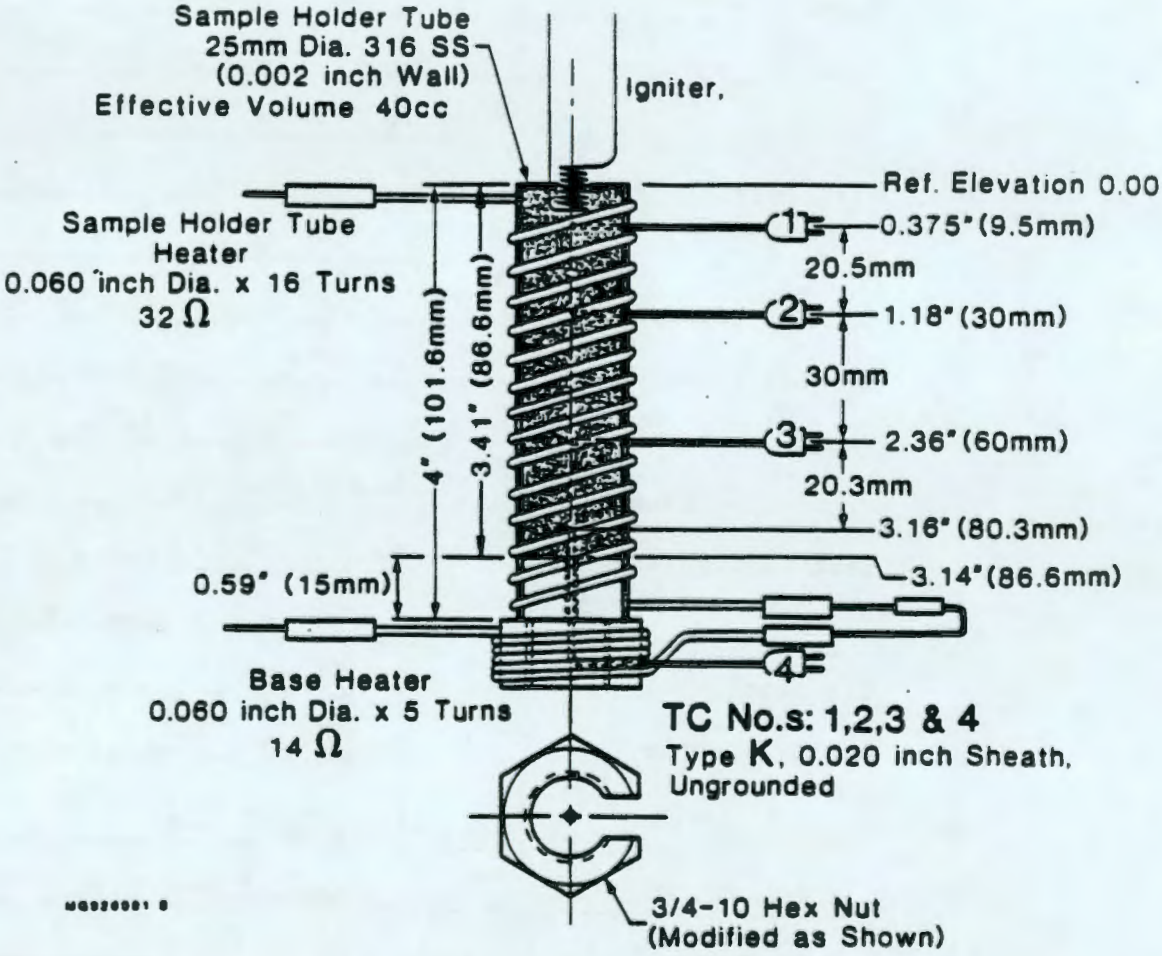

Fig. 2-3 25 mm diameter sample holder used in burn velocity tests.

26 Jan 1993

WHC PROPAGATION TEST A T0127-1 1993

TEST PRESSURE 10 atm abs 130 psig

SAMPLE TEMPERATURE 60 °C

SAMPLE HOLDER 25 mm dia x 101 mm lg

Verify dimensions

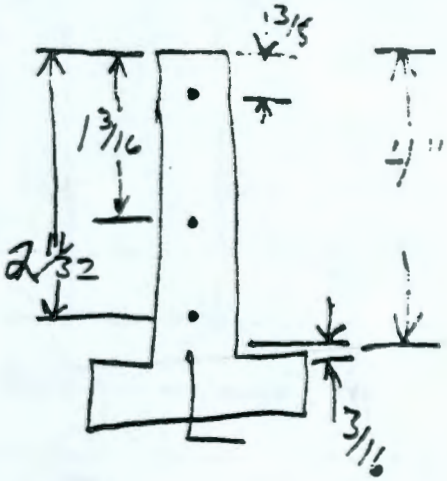

Overall height 4.0"

TC 1	3/8	No.	64
TC 2	1 3/16	No.	58
TC 3	2 11/32	No.	59
TC 4	3/16 FROM BASE	No.	50

Containment 49L

TC 5	No.	104	bottom
TC 6	No.	105	top

Pressure Transducer

High Range 200 psi Cal Fac 40.0 PSI/volt

Lo Range _____ Cal Fac _____ PSI/volt

Sample: INFARM-1 Bottom 0% water
Ref: INFARM 1A REV 3 - 8-26-92

(50gm) Sample Wgt 49.7 gm
Sample ht .25 FROM TOP SG 1.18

Igniter Wgt 4.0 gm

Date 27 Jan 93

Test T 0127-1

Calculation of Sample Packed Density.

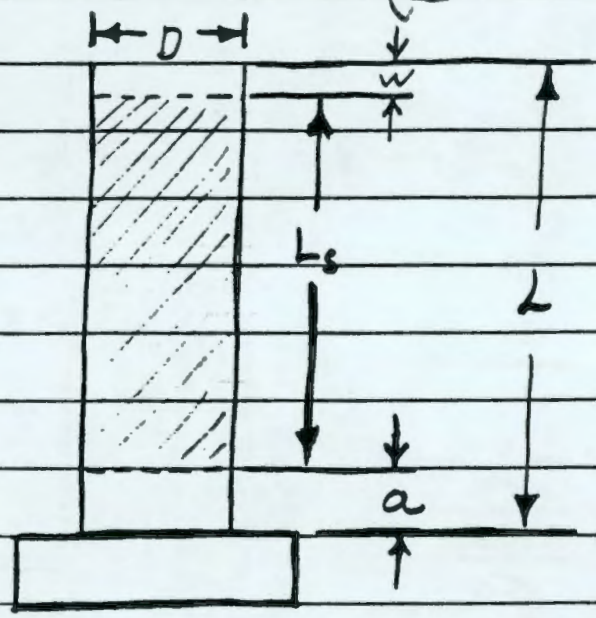

Sample wgt.

M_s 49.7 gm

D 25 mm

L 4.0 inch 101.6 mm

a 0.59 inch 15.0 mm

w 1/4 inch 6.4 mm

$L_s = L - (a + w) = 80.2$ mm

use dimensions in (mm)

$V_s = \frac{\pi D^2}{4} L_s \times 10^{-3}$ 39.36 cm^3

Packing Density $= \frac{M_s}{V_s}$ $\frac{49.7}{39.36} = 1.26 \frac{gm}{cm^3}$

DISTRIBUTION

Number of copies

OFFSITE

12	U.S. Department of Energy EM-35, Trevion II Washington, D.C. 20585 John C. Tseng
1	U.S. Department of Energy Savannah River Operations Office P.O. Box A Aiken, South Carolina 29808 Thomas C. Temple
1	Charles S. Abrams 1987 Virginia Idaho Falls, ID 83404
1	David O. Campbell 102 Windham Road Oak Ridge, TN 37830
1	Fred N. Carlson 6965 North 5th West Idaho Falls, ID 83401
1	Donald T. Oakley 409 12th Street SW, Suite 310 Washington, DC 20024-2188
1	Arlin K. Postma 3640 Ballard Road Dallis, Oregon 97338
1	William R. Prindle 1556 Crestline Drive Santa Barbara, CA 93105
1	Alfred Schneider 5005 Hidden Branches Drive Dunwoody, GA 30338
1	Air Products & Chemicals, Inc. 7201 Hamilton Blvd Allentown, PA 18195-1501 George E. Schmauch

DISTRIBUTION (cont)

Number of copies

OFFSITE

1	Battelle Columbus Laboratories 505 King Avenue Columbus, OH 43201-2693 James A. Gieseke
2	Brookhaven National Laboratory Upton, NY 11973 Kamal K. Bandyopadhyay Morris Reich
1	Design Science, Inc. 163 Witherow Road Sewickley, PA 15143 Gary Powers
1	Fauske and Associates, Inc. 16W070 W. 83rd St. Burr Ridge, IL 60521 Hans K. Fauske
1	Florida State University Department of Chemistry B-164 Tallahassee, FL 32306 Greg R. Choppin
1	Harvard University 295 Upland Avenue Newton Highlands, MA 02161 Melvin W. First
1	Hazards Research Corporation 200 Valley Road, Suite 301 Mt. Arlington, NJ 07856 Chester Grelecki
1	Lawrence Livermore National Laboratory P.O. Box 808, L-221 Livermore, CA 94550 Billy C. Hudson

DISTRIBUTION (cont)

Number of copies

OFFSITE

4	Los Alamos National Laboratory P.O. Box 1663 Los Alamos, NM 87545 Steve F. Agnew Steve W. Eisenhawer Thomas E. Larson L. Harold Sullivan
1	MIT/Department of Nuclear Engineering 77 Massachusetts Ave. Room 24-102 Cambridge, MA 02139 Mujid S. Kazimi
1	Nuclear Consulting Services, Inc. P.O. Box 29151 Columbus, OH 43229 J. Louis Kovach
	Oak Ridge National Laboratory
1	Emory D. Collins P.O. Box 2008 7930, MS-6385 Oak Ridge, TN 37831-6385
1	Charles W. Forsberg P.O. Box 2008 MS-6495 Oak Ridge, TN 37831-6495
1	Thomas S. Kress P.O. Box 2009 9108, MS-8088 Oak Ridge, TN 37831-8088
1	Rice University 5211 Paisley Houston, TX 77096 Andrew S. Veletsos

DISTRIBUTION (cont)

Number of copies

OFFSITE

1	Sandia National Laboratory P.O. Box 5800 Albuquerque, NM 87185 Scott E. Slezak	
4	Science Applications International Corporation 12850 Middlebrook Road Trevion I, Suite 300 Germantown, MD 20874 Ray S. Daniels (3) John M. Saveland	
1	University of South Carolina Department of Electrical and Computer Engineering Swearingen Engineering Center Columbia, SC 29208 Joseph S. Byrd	
1	University of Washington Center for Process Analytical Chemistry Chemistry Department BG-10 Seattle, WA 98195 Bruce R. Kowalski	
1	Vanderbilt University P.O. Box 1596, Station B Nashville, TN 37235 Frank L. Parker	

ONSITE

11	U.S. Department of Energy, Richland Field Office	
	R. F. Christensen (6)	A4-02
	R. E. Gerton	A4-02
	A. G. Krasopoulos	A5-55
	Public Reading Room	A1-65
	RL Docket File (2)	A3-11

DISTRIBUTION (cont)

Number of copies		
ONSITE		
9	Pacific Northwest Laboratory	
	R. T. Allemann	K7-15
	S. A. Bryan	P7-25
	B. M. Johnson	K1-78
	M. A. Lilga	P8-38
	R. D. Scheele	P7-25
	G. F. Schiefelbein	P8-38
	D. M. Strachan	K2-38
	PNL Technical Files	K1-11
	Hanford Technical Library	P8-55
63	Westinghouse Hanford Company	
	H. Babad	R2-08
	D. B. Bechtold	T6-50
	J. R. Bell	R3-09
	D. C. Board	S1-57
	G. L. Borsheim	R2-11
	V. C. Boyles	R1-49
	S. L. Bradley	B3-06
	R. J. Cash (5)	R2-32
	M. D. Crippen	L5-31
	G. M. Christensen	H4-21
	R. D. Crowe	H4-62
	S. J. Dechter	R2-50
	C. DeFigh-Price	R2-31
	J. L. Deichman	B1-59
	D. R. Dickinson	L5-31
	G. T. Dukelow (2)	R2-32
	G. L. Fox	L5-01
	G. T. Frater	R1-51
	J. C. Fulton	R2-31
	K. A. Gasper	R2-08
	J. M. Grigsby	H4-62
	H. D. Harmon	R2-52
	J. M. Held	R3-12
	M. N. Islam	R3-08
	J. R. Jewett	T6-50
	N. W. Kirch	R2-11
	C. A. Kuhlman	B3-30
	M. Kummerer	H4-62
	J. D. McCormack	L5-31
	J. M. McLaren	H0-34
	J. E. Meacham	R2-32
	N. J. Milliken	H4-62
	A. F. Noonan	R2-12
	J. W. Neskas	R2-11
	P. C. Ohl	H5-09

DISTRIBUTION (cont)

Number of copies

ONSITE

Westinghouse Hanford Company (cont)

P. M. Phelps	B3-30
D. N. Price	R2-14
J. G. Propson	R2-18
R. E. Raymond	R1-80
F. R. Reich	L5-63
D. A. Reynolds	R2-11
B. C. Simpson	R2-12
S. R. Tifft	H6-16
H. Toffer	H0-38
R. K. Welty	R1-80
W. P. Whiting	B3-25
J. C. Wiborg	H4-60
W. D. Winkelman	L5-55
D. D. Wodrich	B1-59
W. F. Zuroff	R2-14
Central Files	L8-04
Document Processing and Distribution (2)	L8-15
EDMC	H6-08
Information Release Administration (3)	R1-08
TFIC	R1-20