HNF-6287
Revision 1

0053383

Project Management Plan for Transuranic and Transuranic Mixed Waste per Tri-Party Agreement M-91-03

Prepared for the U.S. Department of Energy
Assistant Secretary for Environmental Management

Project Hanford Management Contractor for the
U.S. Department of Energy under Contract DE-AC06-96RL13200
Fluor Hanford
P.O. Box 1000
Richland, Washington

RECEIVED
JUL 17 2000
EDMC

Approved for public release; further dissemination unlimited

HNF-6287
Revision 1

Project Management Plan for Transuranic and Transuranic Mixed Waste per Tri-Party Agreement M-91-03

L. Bounini
Fluor Hanford

S. P. Anderson
Fluor Hanford

Date Published
June 2000

Prepared for the U.S. Department of Energy
Assistant Secretary for Environmental Management

Project Hanford Management Contractor for the
U.S. Department of Energy under Contract DE-AC06-96RL13200

Fluor Hanford
P.O. Box 1000
Richland, Washington

Chris Willingham 6/28/00
Release Approval Date

Approved for public release; further dissemination unlimited

LEGAL DISCLAIMER

This report was prepared as an account of work sponsored by an agency of the United States Government. Neither the United States Government nor any agency thereof, nor any of their employees, nor any of their contractors, subcontractors or their employees, makes any warranty, express or implied, or assumes any legal liability or responsibility for the accuracy, completeness, or any third party's use or the results of such use of any information, apparatus, product, or process disclosed, or represents that its use would not infringe privately owned rights. Reference herein to any specific commercial product, process, or service by trade name, trademark, manufacturer, or otherwise, does not necessarily constitute or imply its endorsement, recommendation, or favoring by the United States Government or any agency thereof or its contractors or subcontractors. The views and opinions of authors expressed herein do not necessarily state or reflect those of the United States Government or any agency thereof.

This report has been reproduced from the best available copy.

Printed in the United States of America

EXECUTIVE SUMMARY

The objective of this project management plan is to identify the requirements, actions, and costs to provide the capability for retrieving and processing Hanford Site remote-handled transuranic waste. The plan also addresses contact-handled transuranic waste in large containers and bulk liquids in drums. The plan is submitted in accordance with the requirements of the *Hanford Federal Facility Agreement and Consent Order* Milestone M-91-03. Unlike a standard U.S. Department of Energy project management plan, this project management plan attempts to define the technical baseline because the baseline occurs before the functional design criteria as dictated by the *Hanford Federal Facility Agreement and Consent Order* milestones.

The initial step in developing this project management plan was to identify, quantify, and characterize the applicable transuranic waste streams. The required treatment for each waste stream was identified based on the waste characteristics and on waste acceptance criteria established for the Waste Isolation Pilot Plant. Two waste disposition options are proposed. Option 1 is to treat all applicable transuranic and transuranic mixed waste streams for disposal at the Waste Isolation Pilot Plant. Option 2 provides for some onsite waste disposal and treats the remaining waste streams for disposal at the Waste Isolation Pilot Plant. The cost estimate was established as a baseline for Option 2 only. The cost estimate is based on constructing two new facilities, one for contact-handled and one for remote-handled waste. It is recognized that planned engineering studies, analysis of options, and conceptual design studies could result in the selection of an alternate approach because the options considered in this project management plan were based on incomplete information such as waste treatment standards, environmental impact statement results, and facility location analysis.

The transuranic and transuranic mixed waste streams addressed include remote-handled, contact-handled waste in non-drum containers, and drums containing bulk liquids or special waste. The project management plan provides details concerning container size, locations of stored waste, and forecast waste from generating units. The quantities of waste are tabulated as follows. Volumes are in cubic meters.

	Stored	Forecast	Total
Contact-handled	8,200	4,400	12,600
Remote-handled	200	1,700	1,900
Total	8,400	6,100	14,500

Processing requirements include retrieval, sorting, and repackaging of large boxes (up to eighteen metric tons in weight and 65 cubic meters in volume) currently stored in the Low-Level Burial Grounds. Additional capability provides for size reduction, sorting of noncompliant items, polychlorinated biphenyl treatment, and liquid/sludge solidification.

The life of the facility acquisition phase of the project will be 7.5 years. The major actions leading to acquisition of the required retrieval, storage, and treatment facilities are: (1) submit this project management plan, (2) define the functional design criteria, (3) develop the conceptual design, (4) complete definitive design, and (5) complete construction and startup. The project schedule indicates that the life cycle will be, at a minimum, 3 years later than currently in the *Hanford Federal Facility Agreement and Consent Order*.

Estimated costs to provide for retrieval equipment and to provide processing facilities are tabulated as follows. Costs shown are in thousands of dollars.

Facility	Project support	Capital	Total
Retrieval	0	780	780
Contact-handled processing	5,750	10,130	15,880
Remote-handled processing	9,420	18,720	28,140
Total	15,170	29,630	44,800

CONTENTS

EXECUTIVE SUMMARY ES-1

GLOSSARY vii

METRIC CONVERSION CHART x

1.0 INTRODUCTION 1-1
1.1 PROJECT GOAL AND DEFINITION 1-1
1.2 PROJECT OBJECTIVES 1-2
1.2.1 Technical Objectives 1-2
1.2.2 Schedule Objectives 1-2
1.2.3 Cost Objectives 1-2

2.0 BACKGROUND 2-1
2.1 WASTE STREAMS AND PHYSICAL INFORMATION 2-2
2.1.1 Waste Physical Information Sources 2-2
2.1.2 Waste Volumes 2-3
2.1.2.1 Contact-Handled Transuranic/Transuranic Mixed Waste Volume 2-3
2.1.2.2 Remote-Handled Transuranic/Transuranic Mixed Waste Volume 2-3
2.1.2.3 PUREX Storage Tunnels 2-4
2.1.3 Waste Characterization 2-4
2.2 WASTE STREAM STABILITY AND KNOWN CONTAMINATION MIGRATION 2-4
2.2.1 Radiological Stability of Waste Forms 2-5
2.2.2 Chemical Stability of Waste Forms 2-5
2.2.3 Areas of Contamination 2-5
2.3 EXISTING TREATMENT CAPACITY AND FACILITY OPTIONS 2-5
2.4 REGULATORY AND COMPLIANCE REQUIREMENTS 2-7

3.0 PROJECT SCOPE 3-1
3.1 ASSUMPTIONS AND BASES 3-1
3.2 OVERALL PROJECT APPROACH 3-3
3.3 RETRIEVAL AND TREATMENT/PROCESSING FOR WASTE ISOLATION PILOT PLANT AS THE SOLE DISPOSAL OPTION 3-4
3.3.1 PUREX Storage Tunnels Waste 3-4
3.3.2 618-10/11 Retrieval Action Plan 3-4
3.3.3 Spent Nuclear Fuel Waste in Experimental Breeder Reactor II Casks 3-5
3.3.4 Glass Logs 3-5
3.3.5 Tank Farms Long-Length Equipment 3-6
3.3.6 Retrieval of Retrievably Stored Transuranic/Transuranic Mixed Waste 3-6
3.3.7 Storage Capacity for Transuranic/Transuranic Mixed Waste 3-7
3.3.8 Processing of Contact-Handled Transuranic/Transuranic Mixed Waste 3-7
3.3.9 Processing of Remote-Handled Transuranic/Transuranic Mixed Waste 3-8
3.4 RETRIEVAL AND TREATMENT/PROCESSING FOR WIPP AS PRIMARY DISPOSAL WITH AN ONSITE DISPOSAL OPTION 3-9
3.4.1 618-10/11 Retrieval Action Plan 3-9
3.4.2 Spent Nuclear Fuel Waste in Experimental Breeder Reactor II Casks 3-9
3.4.3 German Glass Logs 3-10
3.4.4 Long-Length Equipment 3-10

CONTENTS (cont)

3.4.5 Onsite Disposal 3-10
3.4.5.1 Caissons 3-11
3.4.5.2 Ion Exchange Modules 3-11
3.4.5.3 Heavy Containers 3-11
3.4.5.4 Breached and Questionable Integrity of Containers 3-12
3.4.6 Storage Capacity for Transuranic/Transuranic Mixed Waste 3-12
3.4.7 New Facilities and their Capabilities Based on Option Including Onsite Disposal 3-12
3.4.7.1 Retrieval Systems 3-13
3.4.7.2 Contact-Handled Facility 3-13
3.4.7.3 Remote-Handled Facility 3-14

4.0 WORK BREAKDOWN STRUCTURE, SCHEDULE, AND COST 4-1
4.1 WORK BREAKDOWN STRUCTURE 4-1
4.2 PROJECT SCHEDULE 4-1
4.3 PROJECT COST AND FUNDING PROFILE FOR NEW TREATMENT CAPACITY 4-2

5.0 CONSTRAINTS 5-1
5.1 AGREEMENT MILESTONES 5-1
5.2 WASTE VOLUMES AND TREATMENT CAPACITIES 5-1
5.3 REGULATORY CONSTRAINTS 5-1
5.4 FUNDING CONSTRAINTS 5-2
5.5 SCHEDULE CONSTRAINTS 5-2

6.0 KEY DELIVERABLES 6-1

7.0 PERFORMANCE MEASUREMENT 7-1

8.0 PROJECT CONTROL 8-1
8.1 PROJECT INTERFACE CONTROL 8-1
8.2 REPORTING AND NOTIFICATION REQUIREMENTS 8-2

9.0 CHANGE MANAGEMENT 9-1
9.1 TECHNICAL BASELINE CONTROL 9-1
9.2 SCHEDULE CHANGE CONTROL 9-1
9.3 DOCUMENTATION 9-1

10.0 REFERENCES 10-1

APPENDICES

A TRI-PARTY AGREEMENT CHANGE CONTROL FORM ..... APP A-i

B PHYSICAL WASTE DATA ..... APP B-i

C WORK BREAKDOWN STRUCTURE AND DICTIONARY ..... APP C-i

D COST AND TECHNOLOGY SELECTION FOR BASIS OF ESTIMATE ..... APP D-i

E AGREEMENT ACTION PLAN COMPLIANCE MATRIX ..... APP E-i

FIGURES

Figure 3-1. Treatment Matrix for Transuranic/Transuranic Mixed Waste (R=radioactive only, M=mixed, P=PCB contaminated). F3-1
Figure 3-2. Stored Waste Location and Retrieval for Waste Isolation Pilot Plant as the Sole Disposition Option (cubic meters) F3-2
Figure 3-3. Contact-Handled Transuranic/Transuranic Mixed Waste Treatment/Processing for Waste Isolation Pilot Plant as the Sole Disposition Option (cubic meters) F3-3
Figure 3-4. Remote-Handled Transuranic/Transuranic Mixed Waste Treatment/Processing for Waste Isolation Pilot Plant as the Sole Disposition Option (cubic meters) F3-4
Figure 3-5. Alternative Disposition Waste Volumes (cubic meters). F3-5
Figure 3-6. Stored Waste Location and Retrieval for Option Including Onsite Disposal (cubic meters). F3-6
Figure 3-7. Processing for Contact-Handled Transuranic/Transuranic Mixed Waste for Option Including Onsite Disposal (cubic meters). F3-7
Figure 3-8. Processing for Remote-Handled Transuranic/Transuranic Mixed Waste for Option Including Onsite Disposal (cubic meters). F3-8
Figure 4-1. Summary Work Breakdown Structure. F4-1
Figure 4-2. Project Summary Schedule F4-2

TABLES

Table 2-1. Container Category Definition 2-1
Table 2-2. Volume Summary for Contact-Handled and Remote-Handled Transuranic and Transuranic Mixed Waste (cubic meters). 2-2
Table 2-3. Volume for Contact-Handled Transuranic and Transuranic Mixed Waste (cubic meters) 2-3
Table 2-4. Volume for Remote-Handled Transuranic and Transuranic Mixed Waste (cubic meters) 2-4
Table 3-1. Onsite Disposal Waste Volume and Total TRU/TRUM Stored Inventory. 3-1
Table 4-1. M-91-03 Summary Schedule. 4-1
Table 4-2. Total Project Cost by Fiscal Year ($K) 4-2

This page intentionally left blank.

GLOSSARY

AEC	Atomic Energy Commission
ALARA	as low as reasonably achievable
CAO	Carlsbad Area Office
CERCLA	*Comprehensive Environmental Response Compensation and Liability Act of 1980*
CDR	conceptual design report
CFR	Code of Federal Regulations
CH	contact-handled
CWC	Central Waste Complex
DOE	U.S. Department of Energy
DOE-RL	U.S. Department of Energy, Richland Operations Office
Ecology	Washington State Department of Ecology
EIS	environmental impact statement
EM	Environmental Management
EPA	U.S. Environmental Protection Agency
ER	environmental restoration (also refers to the Environmental Restoration program)
FDC	functional design criteria
FH	Fluor Hanford
FFCA	*Federal Facilities Compliance Act of 1992*
FFTF	Fast Flux Test Facility
FRG	Federal Republic of Germany
FRP	fiberglass reinforced plywood
FY	fiscal year
GTC3	Greater-Than-Category 3
HLW	high-level waste
HNF	Hanford Nuclear Facility (document identifier)
ICD	interface control document
INEEL	Idaho National Engineering and Environmental Laboratory
ISB	integrated site baseline
IXM	ion exchange module
LANL	Los Alamos National Laboratory
LDR	land disposal restrictions
LEC	long equipment container
LLBG	Low-Level Burial Grounds
LLE	long-length equipment
LLM	low-level mixed
LLMW	low-level mixed waste
LLW	low-level waste
MYWP	multi-year work plan

GLOSSARY (cont)

N/A	not available or not applicable
NDA	nondestructive assay
NDE	nondestructive examination
NEPA	*National Environmental Policy Act of 1969*
ORNL	Oak Ridge National Laboratory
ORP	Office of River Protection (DOE)
ORR	operational readiness review
PCB	polychlorinated biphenyl
PFP	Plutonium Finishing Plant
PMP	project management plan
PNL	Pacific Northwest Laboratory
PNNL	Pacific Northwest National Laboratory
PUREX	plutonium-uranium extraction (Plant)
QA	quality assurance
QC	quality control
RCRA	*Resource Conservation and Recovery Act of 1976*
RH	remote-handled
RPP	River Protection Project
ROD	record of decision
SNF	spent nuclear fuel
SWB	standard waste box
SW-EIS	solid waste environmental impact statement
SWIFT	Solid Waste Integrated Forecast Technical
SWITS	Solid Waste Inventory Tracking System
Tri-Party Agreement	*Hanford Federal Facility Agreement and Consent Order*
TRU	transuranic
TRUM	transuranic mixed
TSCA	*Toxic Substances Control Act of 1976*
TSD	treatment, storage, and/or disposal

GLOSSARY (cont)

WAC	Washington Administrative Code
WBS	work breakdown structure
WERF	Waste Experimental Reduction Facility
WIPP	Waste Isolation Pilot Plant
WMP	Waste Management Project
WRAP	Waste Receiving and Processing Facility

METRIC CONVERSION CHART

Into metric units			Out of metric units		
If you know	Multiply by	To get	If you know	Multiply by	To get
Length			**Length**		
Inches	25.40	Millimeters	millimeters	0.0393	inches
Inches	2.54	Centimeters	centimeters	0.393	inches
Feet	0.3048	Meters	meters	3.2808	feet
Yards	0.914	Meters	meters	1.09	yards
Miles	1.609	Kilometers	kilometers	0.62	miles
Area			**Area**		
Square inches	6.4516	Square centimeters	square centimeters	0.155	square inches
Square feet	0.092	Square meters	square meters	10.7639	square feet
Square yards	0.836	Square meters	square meters	1.20	square yards
Square miles	2.59	Square kilometers	square kilometers	0.39	square miles
Acres	0.404	Hectares	hectares	2.471	acres
Mass (weight)			**Mass (weight)**		
Ounces	28.35	Grams	grams	0.0352	ounces
Pounds	0.453	Kilograms	kilograms	2.2046	pounds
Short ton	0.907	metric ton	metric ton	1.10	short ton
Volume			**Volume**		
Fluid ounces	29.57	milliliters	milliliters	0.03	fluid ounces
Quarts	0.95	liters	liters	1.057	quarts
Gallons	3.79	liters	liters	0.26	gallons
Cubic feet	0.03	cubic meters	cubic meters	35.3147	cubic feet
Cubic yards	0.76456	cubic meters	cubic meters	1.308	cubic yards
Temperature			**Temperature**		
Fahrenheit	subtract 32 then multiply by 5/9ths	Celsius	Celsius	multiply by 9/5ths, then add 32	Fahrenheit
Energy			**Energy**		
Kilowatt hour	3,412	British thermal unit	British thermal unit	0.000293	kilowatt hour
Kilowatt	0.948	British thermal unit per second	British thermal unit per second	1.055	kilowatt
Force/Pressure			**Force/Pressure**		
Pounds per square inch	6.895	kilopascals	kilopascals	0.14504	pounds per square inch

Source: *Engineering Unit Conversions*, M. R. Lindeburg, PE., Second Ed., 1990, Professional Publications, Inc., Belmont, California.

PROJECT MANAGEMENT PLAN FOR TRANSURANIC AND TRANSURANIC MIXED WASTE PER TRI-PARTY AGREEMENT M-91-03

1.0 INTRODUCTION

Change Number M-91-96-01 of the *Hanford Federal Facility Agreement and Consent Order* (Tri-Party Agreement) established a new major milestone (M-91-00) "to complete the acquisition of new facilities, and modification of existing facilities necessary for storage, treatment/processing, and disposal of all Hanford Site transuranic (TRU), transuranic-mixed (TRUM), low-level mixed (LLM), and Greater-Than-Category 3 (GTC3) wastes." M-91-03 is an interim milestone requiring a project management plan (PMP) to be submitted to the Washington State Department of Ecology (Ecology) for all major project tasks and deliverables pertaining to the acquisition of facilities for the treatment/storage of Hanford Site TRU/TRUM waste. This PMP includes all plan elements required by Tri-Party Agreement Action Plan, Section 11.5 (refer to Appendix E for compliance matrix). Low-level mixed waste and GTC3 wastes have been addressed by a previously completed PMP (HNF-4293) written in accordance with milestone M-91-10. A schedule of the major milestones and decision points is included. Draft Tri-Party Agreement Change Control Forms (change requests) are provided as Appendix A.

It should be noted that this PMP differs considerably from a traditional U.S. Department of Energy (DOE) PMP because of the position of the development date in the project timeline as specified by the Tri-Party Agreement milestone. The Tri-Party Agreement milestone dates dictate that the PMP be completed before the functional design criteria (FDC) and conceptual design report (CDR), which normally is not the case in a project timeline. The order of the Tri-Party Agreement milestones pertaining to TRU/TRUM waste in M-91 is to submit TRU/TRUM waste PMP to Ecology in June 2000, and complete and submit TRU/TRUM waste engineering study/FDC study to Ecology in December 2002. As a result, this PMP attempts to define the technical baseline, which usually is defined fully in the FDC and CDR that normally precede issuance of a PMP. The primary information included in Chapter 3.0, Sections 3.4.7 and Chapter 4.0, Section 4.1, forms the entire technical baseline for future planning, design, and budget activities.

1.1 PROJECT GOAL AND DEFINITION

The project goal is to develop additional processing capabilities necessary to store and treat all Hanford Site TRU/TRUM waste in accordance with Milestone M-91-00.

The project scope consists of acquiring the physical facilities and technologies (refer to Chapter 3.0, Sections 3.3 and 3.4 for details) to provide storage and treatment capacity for the applicable waste streams (refer to Chapter 2.0, Section 2.1).

The applicable waste streams include stored and forecast TRU/TRUM waste volumes currently not identified for processing at the Waste Receiving and Processing (WRAP) Facility, including the following:

- All stored remote-handled (RH) TRU/TRUM waste (post 1970) and all forecast RH TRU/TRUM waste

- Non-drum stored contact-handled (CH) TRU/TRUM waste (post 1970), all non-drum forecast CH TRU/TRUM waste (e.g., boxes and equipment), and drums containing bulk CH TRU/TRUM liquids and special waste streams (e.g., hydraulic oil, sludges).

By mutual agreement of the Tri-Party Agreement representatives, this PMP also addresses the acquisition of the facilities for retrieval of the post-1970 TRU/TRUM waste that is retrievably stored in the 200 Area Burial Grounds. Though it is beyond the scope of Tri-Party Agreement Milestone M-91, this PMP also provides a brief discussion (refer to Chapter 3.0, Section 3.3.2) of the actions leading to the retrieval of the potentially TRU/TRUM waste from the 618-10 and 618-11 Burial Grounds.

The project scope does not address Hanford Site infrastructure or transportation requirements associated with the project, but will interface with existing infrastructure as necessary. The project will be considered complete at the conclusion of startup activities for the entire M-91 facility acquisition project. Startup activities, such as equipment calibration and required functional tests, will be identified and defined in a startup plan.

1.2 PROJECT OBJECTIVES

Technical, schedule, and cost objectives are discussed in the following sections.

1.2.1 Technical Objectives

The technical objectives are to achieve the scope specified in the Project technical baseline.

Normally the work breakdown structure (WBS) and CDR would form a technical baseline in a PMP. However, in the absence of a CDR for new treatment capacity, the primary information included in Chapter 3.0, Section 3.4.7, and Chapter 4.0, Section 4.1, forms the entire technical baseline at this stage of the project. The CDR, when developed, could affect the entire baseline.

1.2.2 Schedule Objectives

The schedule objective is to accomplish the defined scope within the established project schedule estimate. The estimated schedule is based on the preliminary technical baseline and technical objectives discussed in Section 1.2.1.

1.2.3 Cost Objectives

The cost objective is to accomplish the defined scope within the established Project cost estimate.

Order-of-magnitude costs are presented to establish budget-funding levels (refer to Chapter 4.0, Section 4.3). The costs were developed using the top-level WBS, project schedule, and a preliminary cost estimate of required treatment/processing facilities. This estimate is within planning level degree of accuracy, and cost numbers will be refined during the engineering phase. The degree of risk, or contingency, was considered during the estimate development.

2.0 BACKGROUND

The Atomic Energy Commission (AEC, the DOE predecessor agency) initially defined TRU waste as "wastes with known or detectable contamination of transuranium nuclides". In March of 1970, AEC sites were directed to segregate TRU waste and place the waste in retrievable storage that would allow the waste to be retrieved within 20 years. Before this date, no effort was made to segregate TRU waste from low-level waste (LLW) or to make LLW retrievable.

From 1973 to 1982, the TRU waste segregation limit was set at 10 nanocuries per gram and in 1982, the limit was changed to 100 nanocuries per gram. This limit statutorily was codified by Congress in 1992. Because of the changing definition of TRU waste, waste generated and stored between 1970 and 1982 could contain less than the current threshold for defining TRU waste of 100 nanocuries per gram. This waste has been termed 'suspect' TRU because of the probability that much of this waste will be designated LLW following verification. However, all containers stored in the Low-Level Burial Grounds (LLBG) through 1988 are considered suspect until proven to be TRU/TRUM waste. In addition, all RH waste (drum and box) is considered suspect because the capability to reliably determine (by assay) the TRU waste content of these containers has never existed on the Hanford Site.

TRU waste was placed in the 200 Areas and at the 618-10/11 Burial Grounds (pre-1970) on the Hanford Site. Some of the projected and stored waste also could contain dangerous waste properties listed in the Ecology *Dangerous Waste Regulations*, Washington Administrative Code (WAC) Chapter 173-303, and would be considered TRUM waste and subject to Ecology regulations.

History of Management and Disposition Options

WHC-SD-WM-ES-341, *Solid Waste and Materials System Alternatives Study,* presented alternatives to provide the necessary facilities to satisfy Tri-Party Agreement M-33-00. M-33-00 established the requirement to submit a change package for acquisition of new facilities, modification of existing facilities, or modification of planned facilities for storage, processing, and/or disposal of solid waste and materials. Subsequent to this study, HNF-2063, *Trade Study for the Processing, Treatment, and Storage of Hanford Site Solid Waste Streams That Have No Current Path Forward,* evaluated alternative locations or facilities for the processing, treatment, and storage of the Hanford Site solid waste streams.

WHC-EP-0225, *Contact-Handled Transuranic Waste Characterization Based on Existing Records,* attempted to quantify the extent of the TRU/TRUM waste management problem. This study concluded that there are vast uncertainties surrounding the projected waste volumes because of inadequate or incomplete records retained during the early Hanford Site operations.

WHC-SD-WM-RPT-060, *Solid Waste Program Technical Baseline Description,* describes a program to receive, store, treat, decontaminate, and dispose of radioactive/nonradioactive waste and the problems inherent in this process. This program addressed, in detail, the planned retrieval of TRU waste from trench 4 of the 218-W-4C LLBG and the planned removal of RH TRU waste stored in dry caissons in the 218-W-4B LLBG.

The HDW-EIS-ROD, *Disposal of Hanford Defense High-Level, Transuranic, and Tank Wastes, Hanford Site, Richland, Washington; Record of Decision,* promulgates the preferred alternative for a facility to be designed, constructed, and operated on the Hanford Site to sort, process, and repackage retrievably stored and newly generated TRU solid waste for shipment to the Waste Isolation Pilot Plant (WIPP). The WRAP Facility resulted from this process and provides for verification, characterization, treatment, and repackaging of CH low-level, low-level mixed, TRU, and TRUM waste in drums. The WRAP Facility

also can provide for the nondestructive assay (NDA) and nondestructive examination (NDE) of boxes and certain other types of containers.

2.1 WASTE STREAMS AND PHYSICAL INFORMATION

Waste physical information sources, waste volumes, and waste characterization information are provided in the following sections.

2.1.1 Waste Physical Information Sources

The TRU/TRUM waste stream, as defined in M-91-03 (refer to Chapter 1.0, Section 1.1), is obtained by completing data sorts on the solid waste inventory tracking system (SWITS) and solid waste integrated forecast technical (SWIFT) databases and by soliciting input and information from Hanford Site generating units and regulators.

The SWITS database contains data (e.g., volumes, container information, and radiological, physical, and dangerous waste characteristics) on each container of waste stored in the LLBG and various other Hanford Site facilities as identified in Tables 2-3 and 2-4. Waste transfer or shipping records for the stored waste were used to extract waste information for input to the SWITS database.

The SWITS database, placed into service in October of 1991, was used to consolidate three other waste record tracking databases including the Richland Solid Waste Information Management System. Information transferred from the other databases varied widely in quality and quantity based on recording requirements at the time of waste generation. For example, from 1970 to 1973, TRU waste segregation was based on generating practices without regard to concentration limit. Also, not until 1982 was a TRU waste form description provided for individual containers as opposed to the entire transfer or shipment. These examples illustrate some of the limitations of the SWITS data for stored TRU waste.

The SWIFT database is used to forecast future waste stream volumes and characteristics using waste generating unit input. The waste generating units provide basic information directly to the SWIFT, such as the life cycle and the waste classes, and defines any nonstandard container or 'combined' dangerous waste characteristics. For each waste class, the generating unit specifies the containers in which the waste will be stored, the projected volume of waste, the physical form of the waste, the dangerous characteristics of the waste, and the radionuclides in the waste. The SWIFT database is updated annually and published in the SWIFT report (e.g., HNF-EP-0918). Generating unit input is obtained through formal meetings and informal contact and included in SWIFT database updates.

The SWIFT data are validated through a quality control (QC) process that includes approval by appropriate authorities. Significant changes in waste volume from previous years are identified and issues resolved before the report is published. The accuracy of the forecast for TRU/TRUM is depicted in Table B-1, and Figures B-1 and B-2 in Appendix B. This information shows some of the programmatic and technical uncertainties associated with the TRU/TRUM forecast. The significant figures for waste data in this PMP are carried through to maintain consistency of the material balance and are not intended to imply the depicted level of precision.

Waste included in M-91-03 scope either is retrievably stored TRU/TRUM waste, or is waste forecast from activities related to facility stabilization and cleanup, including maintenance of process equipment, laboratory operations, and River Protection Project (RPP) and the tank farms cleanup operations, managed by the Office of River Protection (ORP). The CH volume of TRU waste consists of large waste

items, waste items in boxes (non-drum containers), and liquid waste in drums. The RH portion includes all TRU/TRUM waste containers having dose rates exceeding 200 millirem per hour at contact.

Waste generated by the Environmental Restoration (ER) Program on the Hanford Site is managed under the *Comprehensive Environmental Response, Compensation, and Liability Act* (CERCLA) *of 1980* regulations and therefore is dispositioned under the ER Program milestones. However, TRU waste as forecast by the ER Program is included in this PMP scope, including the 618-10, 618-11 Burial Grounds. The 241-Z-361 tank, managed by the Materials Disposition Program, also is included in this PMP.

2.1.2 Waste Volumes

Life cycle forecast and stored volumes, as well as other relevant information, for CH and RH TRU/TRUM waste obtained from HNF-EP-0918 and a SWITS search are presented in Appendix B. The SWIFT and SWITS databases are updated regularly, however, this PMP is a point in time document, and uses only the referenced version of the reports. To facilitate waste stream data analysis and summary in this document, the stored and forecast containers were grouped into the categories defined in Table 2-1. For CH small containers, the standard waste box (SWB) was taken as the upper limit because the SWB is the largest WIPP acceptable CH container.

M-91-03 stored and forecast CH and RH TRU/TRUM waste volumes from the SWIFT and SWITS reports are summarized in Table 2-2. The retrievably stored CH TRU/TRUM waste volume of 8,185 cubic meters is mostly in boxes and does not include approximately 8,400 cubic meters of stored CH drums that are included in other waste management programs. In addition, the large volume (approximately 10,200 cubic meters) of forecast CH TRU/TRUM waste drums from the 618-10 and 618-11 Burial Grounds is not included in this PMP because this waste can be processed at the WRAP Facility. Additional waste information is provided in Chapter 3.0.

It should be noted that in approximately the same time period (approximately 30 years), the amount of forecast CH waste (from 1999 to 2035) is roughly half that of the stored volume (from 1970 to 1999). Conversely, the amount of forecast RH waste far exceeds the amount of RH stored waste generated during the same time. Drums make up a substantial portion of the RH waste volume total, but drums are only a minor portion of the CH total. The total volume of CH TRU/TRUM waste is approximately 12,600 cubic meters, while the total volume of RH TRU/TRUM waste is just under 1,900 cubic meters.

2.1.2.1 Contact-Handled Transuranic/Transuranic Mixed Waste Volume

Table 2-3 shows CH TRU and TRUM waste volumes by storage facility, generating unit, and by container category. The waste is subdivided into waste volumes containing dangerous constituents and those with strictly radioactive waste compositions. Approximately 75 percent of the stored waste is contained in extra-large and large containers primarily stored in the 218-W-3A and 218-W-4C LLBG. Approximately 85 percent of the forecast waste will be packaged in small containers or drums and will be generated by Plutonium Finishing Plant (PFP). Two other substantial forecast waste streams are extra-large containers containing long length equipment (491.7 cubic meters) from tank cleanout activities and large containers containing 100 Area K-Basins waste (144.0 cubic meters).

2.1.2.2 Remote-Handled Transuranic/Transuranic Mixed Waste Volume

RH TRU and TRUM waste volumes are shown in Table 2-4 and are grouped by storage facility, generating unit, and container category. Mixed and radioactive waste is again segregated for volume comparison. Nearly 90 percent of the total waste volume shown is from forecast waste. The two largest

waste volumes are in extra-large containers containing long length equipment from the tank farms (approximately 32 percent of all waste) and sludge and debris from the 100 Area K-Basins cleanout project (approximately 32 percent of all waste).

2.1.2.3 PUREX Storage Tunnels

Some of the waste stored in the tunnels, which is not included in the SWIFT forecast, potentially could be TRU/TRUM waste. The PUREX Storage Tunnels waste consists primarily of failed or obsolete large equipment with very high radiation dose rates. The issues surrounding the PUREX Storage Tunnels and waste disposition are discussed in Chapter 3.0, Section 3.1, Assumption 4. Information concerning the PUREX Storage Tunnels waste inventory is contained in the *Dangerous Waste Portion of the Resource Conservation and Recovery Act of 1976 (RCRA) Permit for the Treatment, Storage, and Disposal of Dangerous Waste, Permit No. WA7890008967*, Part III, Chapter 3 (Ecology 2000).

2.1.3 Waste Characterization

Available waste information including the physical forms, volumes, chemical and radiological characteristics, container information, and the dangerous properties for each stored/forecast waste stream is provided in Appendix B. Information on stored waste is available by package and is based on historical records as currently entered in the SWITS database. Forecast waste information is segregated by waste stream and contains information supplied by the generating unit as currently documented in the SWIFT database.

Most of the M-91-03 waste consists of debris and smaller amounts of liquids and sludges. Debris includes paper, plastic, protective clothing items, metals, shielding, and pieces of equipment. M-91-03 debris varies in physical and chemical characteristics. Packages might contain inorganic debris (metal, concrete, etc.), organic debris (paper, plastic, wood), or a mixture of both organic and inorganic debris (heterogeneous). Liquids and sludges are generated by facility stabilization and spent nuclear fuel and laboratory operations.

Waste characterization available to date is used to develop treatment and processing options for use in planning TRU/TRUM waste disposition. Further characterization of actual waste during treatment and processing will be required to more effectively conduct treatment/processing facility operations and certify the TRU/TRUM waste for acceptance at WIPP.

The characterization of the waste is based on the categories in the DOE *Waste Treatability Group Guidance Document* (DOE/LLW-217). The dangerous properties assigned to the waste were based on WAC 173-303.

2.2 WASTE STREAM STABILITY AND KNOWN CONTAMINATION MIGRATION

Transuranic-bearing wastes have been packaged in containers and mostly segregated from LLW in retrievable storage trenches or stored in the Central Waste Complex (CWC). These wastes consist primarily of dry debris (e.g., soiled clothing, laboratory supplies, tools, and failed process equipment packaged in wood, fiberglass-reinforced plywood, metal, or concrete boxes), and liquid (corrosives and polychlorinated biphenyl (PCB) contaminated liquids). Much of the solid waste has been buried in trenches nearly 30 years. As a result, the waste packages buried earlier in the 30-year period might be deteriorated to the point where structural integrity could fail when retrieval is attempted. The majority of CH and RH TRU/TRUM waste currently is stored in four LLBG (218-E-12B, 218-W-3A, 218-W-4B, and

218-W-4C), with the remaining waste stored at numerous locations on the Hanford Site. Liquid waste stored in CWC is managed according to applicable regulations.

2.2.1 Radiological Stability of Waste Forms

The solid and debris waste physical form does not readily allow migration or spread of radioactive contamination. Liquid waste is stored in polyurethane or glass containers inside a second waste container in a building. These containers are subject to rupture and release of the contents if the waste container is breached. Nuclear criticality is not a credible scenario for TRU waste based on packaging requirements imposed for criticality prevention.

Other areas of possible concern when treating and storing radioactive waste include gas and heat generation. Gas generation could occur when radiolytic decay is strong enough to cause release of hydrogen from organic material such as plastics. All TRU waste containers stored in CWC have venting systems in place as a requirement for acceptance and storage of newly generated TRU waste. Similarly, heat generation is a concern for certain isotopes, including plutonium-238. The SWITS database contains provisions to perform calculations on suspect waste to identify waste with heat or gas generation potential.

2.2.2 Chemical Stability of Waste Forms

Waste generated after August 19, 1987 was segregated by waste type and chemical hazard characteristics into containers at the point of generation in adherence with RCRA requirements. The Waste Management Project (WMP) further segregates the waste containers received based on chemical hazards. Incompatible waste or waste with special storage requirements is segregated to reduce the risk of accidental events such as chemical reaction, explosion, and/or fire. Therefore, acidic waste is stored in separate areas from caustic waste, and flammable materials are stored in accordance with safety requirements.

Waste generated before RCRA regulations was segregated based on good management practices. Segregation was based largely on direction given by the specific generating unit. With numerous generating units and no formal guidance for segregation, the chemical stability of waste in trenches that was generated before being regulated is unknown.

2.2.3 Areas of Contamination

The following documents did not identify any areas of contamination related to retrievably stored TRU/TRUM waste: (1) FDH-8803787B-R99, Letter, R. H. Gurske to S. H. Wisness, "Contract No. DE-AC06-98RL13200 - Fluor Daniel Hanford, Inc. Quarterly Release Report for July, August, and September 1999", October 22, 1999; (2) PNNL-12088, *Hanford Site Environmental Report for Calendar Year 1998*, Pacific Northwest National Laboratory, Richland, Washington, and (3) DOE/RL-99-41, *Radionuclide Air Emissions Report for the Hanford Site, Calendar Year 1998*, U.S. Department of Energy, Richland Operations Office, Richland, Washington.

2.3 EXISTING TREATMENT CAPACITY AND FACILITY OPTIONS

There is no existing commercial or fully functional DOE treatment capacity for RH TRU waste.

Retrieval operations of TRU/TRUM waste were performed at Los Alamos National Laboratory (LANL), Oak Ridge National Laboratory (ORNL), Idaho National Engineering and Environmental Laboratory (INEEL), and Savanna River Site. The Hanford Site TRU/TRUM waste retrieval project has reviewed the work performed at other DOE sites and incorporated relevant information into work plans.

The Waste Experimental Reduction Facility (WERF) incinerator at INEEL is not a viable option for the Hanford Site waste because of low plutonium acceptance limits, and the inability of WERF to accept and manage RH waste. Similarly, the ORNL incinerator accepts no TRU waste. The waste acceptance criteria for the Consolidated Incinerator Facility at the Savannah River Site do not allow for the acceptance of TRU waste or waste contaminated with PCBs.

Options for treating and repackaging RH and large CH TRU waste could be accomplished through the modification of the existing Hanford Site facilities, or through new facilities co-located with the existing facilities. However, for the purposes of estimating facility costs in this PMP (refer to Chapter 4.0 for details), it was assumed that new facilities will be required for both streams. This is because of the many uncertainties regarding the project and the existing facilities, and the estimate should act as a bounding consideration for the project scope considered until such time as the conceptual phase of the project is completed.

The WRAP Facility characterization and loadout systems will be used to certify and prepare for shipment the waste processed and repackaged in the M-91 CH facility. The WRAP Facility provides the capability for waste container verification to determine if the waste is low-level or TRU. Treatment, characterization (including sampling, NDA, and NDE), and repackaging are performed at WRAP as required to meet WIPP certification requirements. Waste managed at WRAP includes CH TRU/TRUM, low-level, low-level mixed, and *Toxic Substance Control Act* (TSCA) *of 1976* PCB waste. The WRAP Facility provides the capability to handle 321-liter drums and 208-liter drums. Boxes not exceeding 2.74 meters long by 1.6 meters wide by 1.7 meters high can be received for NDE and boxes not exceeding 2.43 meters long by 1.5 meters wide by 1.5 meters high can be received for NDA.

Modifications to WRAP to process M-91-03 wastes could prove detrimental to existing missions for the processing of TRU waste shipped to WIPP. Additionally, location of additional facilities within the WRAP boundaries might not be possible because of physical constraints and, in the case of RH waste, the associated dose rates.

T Plant Complex, currently permitted for RCRA treatment (including sorting and repackaging), is an option that will be considered during the Facility Options Analysis (refer to Chapter 3.0, Section 3.2, Item 6). Non-thermal treatment processes have been performed at T Plant Complex in the past, including stabilization, decontamination, and macroencapsulation. Waste that can be managed at T Plant Complex includes TRU, TRUM, low-level, low-level mixed, and TSCA PCB waste.

A building within the T Plant Complex boundaries, or modification of the buildings (2706-T and canyon area) would appear to be the most viable alternative. However, given the preliminary nature of the project, as well as several T Plant Complex uncertainties, such as the seismic capabilities of the building, use of the existing ventilation systems, stack classifications, fire protection upgrades, the project risk associated with the T Plant Complex option cannot be assessed properly. Recent missions changes for T Plant Complex are addressing many of these issues. Results are not certain at this time and were not conclusive to support submittal with this PMP.

2.4 REGULATORY AND COMPLIANCE REQUIREMENTS

The facilities discussed in this plan will be dual use facilities for TRU wastes subject to *Atomic Energy Act of 1954* requirements and TRUM wastes, which are subject to both *Atomic Energy Act* and RCRA requirements. Regulatory documents of particular relevance to this PMP are discussed in the following paragraphs. Further regulatory requirements and assumptions are in Chapter 3.0, Section 3.1, Assumptions and Bases.

DOE/EIS-0113, *Final Environmental Impact Statement - Disposal of Hanford Defense High-Level, Transuranic, and Tank Wastes*, which commonly is referred to as the Hanford Defense Waste Environmental Impact Statement (HDW-EIS), addresses disposition of TRU waste on the Hanford Site. The HDW-EIS states that newly generated and retrievably stored TRU waste will be sent to WIPP for final disposal following processing and certification on the Hanford Site.

A solid waste EIS (SW-EIS), is currently under development and will address the disposition of TRU waste on the Hanford Site. The SW-EIS will evaluate various options for retrievably stored TRU waste from complete removal to leaving all TRU in-place. The record of decision (ROD) for the SW-EIS is expected to be issued in calendar year 2001. This ROD will be the ultimate governing *National Environmental Policy Act* (NEPA) *of 1969* documentation regarding retrieval of all or part of the TRU waste currently stored in the 200 Areas burial grounds and will identify the selected alternatives for this CH and RH TRU/TRUM waste. The ROD will not address retrieval of TRU waste from areas outside of the 200 Area burial grounds.

DOE Order 435.1, *Radioactive Waste Management,* governs management of all radioactive waste, including TRU waste. The objective of this requirement is to ensure TRU waste is disposed of in a facility that meets the appropriate regulatory requirements and to establish Headquarters as the DOE authority for making compliance determinations for TRU waste disposal facilities other than WIPP. The order cancels and replaces DOE Order 5820.2A, *Radioactive Waste Management.* DOE Order 435.1 will be implemented when the U.S. Department of Energy, Richland Operations Office (DOE-RL) contracting officer has provided direction to Fluor Hanford (FH) to implement into the contract. Currently, DOE Order 5820.2A is in FH contracts. The DOE Order 435.1 states that disposal of TRU waste is to be in accordance with 40 CFR 191. The guidance documents to the Order anticipate TRU waste disposal at places other than WIPP. The manual associated with the new Order, DOE M 435.1-1, *Radioactive Waste Management Manual*, states the following regarding waste definition, treatment, and disposal.

- Treatment and Disposal: "Transuranic waste shall be treated as necessary to meet the waste acceptance requirements of the facility receiving the waste for storage or disposal" and "shall be disposed in accordance with the requirements of 40 CFR Part 191, *Environmental Radiation Protection Standards for Management and Disposal of Spent Nuclear Fuel, High-Level and Transuranic Wastes.*"

- Mixed Transuranic Waste: "Transuranic waste determined to contain both a hazardous component subject to the *Resource Conservation and Recovery Act* (RCRA), as amended, and a radioactive component subject to the *Atomic Energy Act of 1954*, as amended, shall be managed in accordance with the requirements of RCRA and DOE O 435.1, *Radioactive Waste Management,* and this Manual."

- TSCA Regulated Waste: "Transuranic waste containing polychlorinated biphenyls, asbestos, or other such regulated toxic components shall be managed in accordance with requirements derived from the *Toxic Substances Control Act,* as amended, DOE O 435.1, *Radioactive Waste Management,* and this Manual."

40 Code of Federal Regulations (CFR) Part 191, *Environmental Radiation Protection Standards for Management and Disposal of Spent Nuclear Fuel, High-Level and Transuranic Wastes*, originally was issued November 18, 1985, revised in part and re-issued in 1994. The rules do not apply to waste disposed previous to November 18, 1985, as the CFR was not written. Disposal facilities built after November 18, 1985 (non-WIPP) require performance assessment approval in accordance with the 1985 regulations. The 1994 CFR revision deviates considerably from what previously was written concerning regulations governing TRU waste disposal facilities. The 1994 CFR does not refer to WIPP specifically, but rather addresses disposal facility requirements in general. The 1994 revision introduced new stringent requirements for individual and groundwater protection for disposal facilities built after January 19, 1994. Disposal facilities built after January 19, 1994 (non-WIPP) require performance assessment approval in accordance with the 1994 regulations.

The *Waste Isolation Plant Land Withdrawal Act*, Public Law 102-579, 106 Stat. 4777, as amended, provides for a repository with acceptance criteria for TRU/TRUM waste. The Act also provides, among other things, that: (1) the repository will comply with the standards provided in 40 CFR 191, (2) mixed wastes designated for disposal at WIPP are not subject to treatment standards promulgated pursuant to Section 3004(m) of the Solid Waste Disposal Act [42 U.S.C. 6924(m)], and (3) mixed wastes will not be subject to the land disposal prohibitions in section 3004(d), (e), (f), and (g) of the *Solid Waste Disposal Act*. Alternatives to TRU/TRUM waste disposal at WIPP are not precluded by the Act.

WAC 173-303 encompasses cradle to grave management of mixed waste. The regulations impose management requirements on TRU waste mixed with dangerous waste constituents. The effective date for Hanford Site compliance with WAC 173-303 was August 19, 1987.

40 CFR Part 761, *Polychlorinated Biphenyl Manufacturing, Processing, Distribution in Commerce, and Use Prohibitions*, updated in 1998, contains rules for the treatment and disposal of PCB contaminated waste. Sections of particular importance to this PMP are 40 CFR 761.60, "Disposal Requirement", 761.62, "Disposal of PCB Bulk Product Waste", and 761.79, "Decontamination Standards and Procedures".

DOE/WIPP-069, *Contact Handled Transuranic Waste Acceptance Criteria for the Waste Isolation Pilot Plant*, set forth the requirements that must be met by all participating DOE TRU waste generating units/storage sites before shipping CH TRU waste forms to WIPP. As stated in the WIPP waste acceptance criteria, the document "serves as the primary directive for ensuring that TRU waste is managed and disposed of in a manner that is protective of worker and public health and safety, and the environment". The document identifies requirements for all physical, nuclear, and chemical properties that must be met by participating sites before shipment of CH TRU waste for disposal at WIPP. Data package and quality assurance (QA) requirements also are described. However, the RH portion of the WIPP waste acceptance criteria has not been developed. However, it is expected that the WIPP final status permit requirements that affect the treatment facilities capabilities for TRU/TRUM waste will apply equally to RH. The final status permit and its impact on both CH and RH waste treatment/processing will be evaluated during the FDC and CDR development to ensure this PMP addresses all relevant acceptance criteria.

Table 2-1. Container Category Definition.

Container category	Contact-handled definition	Remote-handled definition
Small	Volume ≤2.1 cubic meters (standard waste box) Weight ≤1,818 kilograms	Volume ≤0.21 cubic meter (208-liter drum) Weight ≤3,636 kilograms
Large	2.1 cubic meters <Volume ≤18 cubic meters 1,818 kilograms ≤Weight ≤20,000 kilograms	0.21 cubic meter <Volume ≤18 cubic meters 3,636 kilograms ≤Weight ≤20,000 kilograms
Extra large	Volume >18 cubic meters Weight >20,000 kilograms	

Table 2-2. Volume Summary for Contact-Handled and Remote-Handled Transuranic and Transuranic Mixed Waste (cubic meters).

	Stored*	Forecast**	Grand total
CH-TRUM			
Extra large	4,526.9	491.7	5,018.6
Large container	3,493.0	144.0	3,637.0
Small container	149.8	3,740.9	3,890.7
Drum	15.2	84.3	77.5
CH total	8,184.9	4,460.9	12,645.8
RH-TRUM			
Extra large	0.0	655.7	655.7
Large container	157.9	62.8	220.7
Small container	25.1	152.8	177.9
Drum	27.7	826.2	853.9
RH total	210.7	1,697.5	1,908.2
Grand total	8,395.6	6,158.4	14,554.0

* Stored data from SWITS.

** Forecast data from SWIFT.

Table 2-3. Volume for Contact-Handled Transuranic and Transuranic Mixed Waste (cubic meters).

	Mixed				Radioactive				Total
	Extra large container	Large container	Small container	Drum	Extra large container	Large container	Small container	Drum	
STORED *									
Storage Location									
324				0.3	1.3				1.6
100KE					15.8				15.8
212N					119.3	97.4			216.7
218E12B							27.3		27.3
218W3A		14.5			2,680.1	570.5	23.8		3,288.9
218W4B			1.8		94.2	421.9	46.0		563.9
218W4C		57.9			1,611.5	1,538.2	2.2	2.5	3,212.3
2345Z		2.1					3.9		6.0
2402WB				6.5					6.5
2402WC		3.2	2.0						5.2
2402WD				2.1					2.1
2402WE				1.5					1.5
2402WL		76.9							76.9
2403WB		7.5		0.4		143.6	17.5		169.0
2403WC		77.6	15.1			200.6			293.3
2403WD		9.6				14.7			24.3
2404WA						9.8			9.8
2420W					4.7				4.7
271U				0.2					0.2
300LEF						3.6			3.6
FS11				0.6					0.6
FS20				0.2					0.2
MWS						21.9			22.0
PNNL						4.1			4.1
Location not listed		87.1	8.3	0.9		130.3	1.9		228.5
Stored Total	0.0	336.4	27.2	12.7	4,526.9	3,156.6	122.6	2.5	8,184.9
FORECAST **									
Waste Generating Unit									
2345-Z Plutonium Finishing Plant			127.3	8.6			3,613.6		3,749.5
K-Basin Fuel Sampling Project						144.0			144.0
Pacific Northwest National Laboratory				0.3				0.3	0.6
241Z-361 Tank				75.0					75.0
Single Shell Tank Long Length Equip.	491.7								491.7
Surplus Facilities				0.1					0.1
Forecast Total	491.7	0.0	127.3	84.0	0	144.0	3,613.6	0.3	4,460.9
Stored and Forecast Total	491.7	336.4	154.5	96.7	4,526.9	3,300.6	3,736.2	2.8	12,645.8

* Abbreviated locations and stored data from SWITS.

** Forecast data from SWIFT.

Table 2-4. Volume for Remote-Handled Transuranic and Transuranic Mixed Waste (cubic meters).

	Mixed				Radioactive				Total
	Extra large container	Large container	Small container	Drum	Extra large container	Large container	Small container	Drum	
STORED *									
Storage location									
324				1.7					1.7
218E12B						2.4	0.5	19.1	22.0
218W3A		0.6				119.6	0.2	3.8	124.2
218W4B						28.5	23.3	2.9	54.7
218W4C		5.8		0.2		1.0	0.1		7.1
2420W							1.0		1.0
Stored Total	0.0	6.4	0.0	1.9	0.0	151.5	25.1	25.8	210.8
FORECAST **									
Waste Generating Unit									
100K K-Basin operations					43.6				43.6
300 Area Revitalization				9.0				19.0	28.0
324 Building			31.3				121.5		152.8
618-10 Burial Ground				8.4					8.4
618-11 Burial Ground				94.0					94.0
K Basin Transition								3.3	3.3
K-Basin Fuel Sampling Project				611.9					611.9
Pacific Northwest National Laboratory				17.2				29.4	46.6
Single Shell Tank long length equipment	491.7								491.7
W-211 Double Shell Tank retrieval systems	120.4	62.8							183.2
W-113 Drum retrieval project								34.0	34.0
Forecast Total	612.1	62.8	31.3	740.5	43.6	0.0	121.5	85.7	1,697.5
Stored and Forecast Total	612.1	69.2	31.3	742.4	43.6	151.5	146.6	111.5	1,908.3

* Abbreviated locations and stored data from SWITS.
** Forecast data from SWIFT.

3.0 PROJECT SCOPE

Assumptions and bases, project approach, WIPP disposal option, WIPP disposal option with onsite disposal, capabilities of new processing facilities, and WBS are discussed in this chapter.

3.1 ASSUMPTIONS AND BASES

The intent of this section is to clarify those areas that are subject to various interpretations and how these interpretations affect the M-91-00 TRU/TRUM waste project scope.

The following key assumptions and bases were developed using the best available engineering, operations, waste treatment, and regulatory experience.

1. The M-91-03 PMP scope is limited to establishing treatment and storage capacity, as well as acquisition of facilities for retrieval of post-1970 TRU/TRUM waste that is retrievably stored in the 200 Area burial grounds.

Rationale: Tri-Party Agreement milestones developed under M-91 are intended to address how to establish retrieval/treatment/storage capacity and how to ensure the designed process will be appropriate for future TRU/TRUM waste management activities. Other Tri-Party Agreement milestones such as M-19 (complete treatment and/or direct disposal of at least 1,644 cubic meters of CH LLMW) are used to address rates for treatment or processing of waste.

2. The Fiscal Year (FY) 2000 SWIFT report (HNF-EP-0918), which forecasts waste volumes, and the SWITS database for stored waste, are the best information sources available, and with amendments where known deficiencies exist, form the waste information basis for this PMP.

Rationale: The SWIFT report is updated continually and used by waste management contractors, including WMP, for planning and business decisions, and the report undergoes appropriate levels of review by onsite personnel. Current efforts integrate supplied data with the onsite disposition waste mapping effort and where known deficiencies are identified, the database is amended.

3. DOE Complex Environmental Management (EM) integration does not impact the project.

Rationale: EM integration is not established as a baseline. Equity issues among States remain to be resolved. The impact is minimal, because no offsite waste stream with special treatment requirements is planned to be shipped to a RH treatment facility.

4. This project does not describe removal and processing facilities for PUREX Storage Tunnels waste.

Rationale: The waste in the PUREX Storage Tunnels consists primarily of failed or obsolete large equipment with very high radiation dose rates. Information concerning the PUREX Storage Tunnels waste inventory is contained in the Hanford Facility RCRA Permit, Part III, Chapter 3. Any retrieval and treatment options for the PUREX Storage Tunnels waste will require major decisions from DOE, FH management, regulators, and stakeholders. Planning a treatment facility for this waste before policy decisions are made is highly speculative and would incur high risk. Major technical issues and regulations (e.g., RCRA closure plans) need to be resolved, and if retrieval of waste from the tunnels is conducted, a large facility with very specific capabilities for the retrieval project could be required.

5. The canyon disposal initiative will not impact the project.

Rationale: The canyon disposal initiative is speculative at this time and is not established as a baseline. Any retrieval, storage, and/or treatment and disposal options will require major decisions from DOE, regulators, and stakeholders. If a storage/in situ disposal option were implemented, this could increase disposal capacity and enhance disposal options for TRU waste.

6. The WIPP waste receipt schedule for RH waste will accommodate the project schedule.

Rationale: If WIPP requires that RH waste be received during a specific time window, a workable and mutually beneficial schedule will be negotiated. As the Hanford Site is the largest RH waste generator for WIPP, it is assumed that the RH waste receipt schedule will accommodate needs on the Hanford Site.

7. TRUM waste will not have to meet the land disposal requirements (LDR) (40 CFR 268) for disposal to WIPP.

Rationale: In September 1996, the President signed the *National Defense Authorization Act*. A subsection of the act was the WIPP *Land Withdrawal Amendment Act*. The Act states that TRU waste designated by the Secretary of DOE for disposal at WIPP is exempt from LDRs. The U.S. Environmental Protection Agency (EPA) subsequently terminated their review of the no-migration petition for WIPP.

8. WIPP will accept TSCA PCB contaminated TRU waste at levels set by the WIPP waste acceptance criteria. However, PCB waste stored on the Hanford Site will be stored in accordance with TSCA requirements.

Rationale: The present WIPP waste acceptance criteria state, "TRU waste with PCB concentrations equal to or greater than 50 parts/million are not allowed for disposal in the WIPP". The DOE envisions recommending legislation to Congress for a revision to the WIPP waste acceptance criteria. The revision is expected to allow disposal of TRU waste, which contains PCB's subject to TSCA regulation at WIPP.

9. If necessary, the EPA will issue an Offsite Rule to enable WIPP to accept Hanford Site TRU/TRUM waste retrieved from burial grounds and the ER activities.

Rationale: If retrieved TRU/TRUM waste from select burial grounds or ER projects is determined to have been generated under CERCLA, the EPA will need to issue an 'Offsite Rule' determination pursuant to 40 CFR 300.440. The EPA usually will issue an Offsite Rule determination if the receiving facility is in compliance with RCRA requirements based on a determination by the State and/or the EPA Region. WIPP will be permitted properly and in compliance with applicable requirements. Therefore, it is assumed any necessary Offsite Rule determination will be issued by the EPA.

10. All stored waste addressed by the PMP will be considered as TRU and not suspect for the purpose of planning facility capacity.

Rationale: Segregating TRU from non-TRU suspect waste requires a major effort including review of burial records and/or retrieval and assay. Review of records will be a major component of the planned waste characterization engineering study. Inclusion of known and suspect TRU waste is conservative in providing sufficient capacity to treat all the TRU/TRUM waste.

11. Sitewide infrastructure (i.e., main roads, water, and power) is assumed to be sufficient as currently exists on the Hanford Site.

Rationale: Transportation and processing of M-91-03 waste is not expected to require special infrastructure upgrades. It is expected that the needs for sitewide infrastructure will be similar to those for T Plant Complex and the WRAP Facility.

3.2 OVERALL PROJECT APPROACH

A systems engineering graded approach will be applied to derive the desired outcome of a disposition plan for each applicable TRU/TRUM waste stream as required by the Tri-Party Agreement. Systems engineering is a generalized, systematic methodology for defining large, complex, and/or first of a kind problems, and evaluating and implementing solutions. The M-91-03 project has a moderate scope as defined in Chapter 1.0 and this chapter, but the regulatory, technical, and technological issues involved are of moderate to high complexity. Project planning, outlined as follows, was structured to include all elements of the systems engineering methodology. The following items form the action boundary description and describe the overall approach for the project.

1. Prepare PMP. The project mission was established by the Tri-Party Agreement major milestone M-91-03 and begins with preparation of a PMP to provide capacity for treatment/storage (and retrieval) of TRU/TRUM waste (refer to Chapter 1.0, Section 1.1). The physical, dangerous, and radiological characteristics of the TRU/TRUM waste streams were defined based on the Tri-Party Agreement Action Plan Section 11.5 terms and requirements, and the assumptions previously described Section 3.1. Required treatment was identified for each waste stream based on WIPP waste acceptance criteria and waste characterization data. Disposal and treatment options were evaluated through a functional analysis and proposed based on impact on personnel, public, and environment, the waste volume to be treated, and availability of commercial/site treatment facilities. Two proposed waste treatment/processing options were presented and an acquisition plan (including schedule and cost estimate) was developed for the second option that included creation of retrieval and treatment capacity. The PMP serves to define the new baseline for the project, which will be refined further, based on the engineering studies, FDC, and/or options analysis (refer to the following).

2. Prepare Waste Characterization Engineering Study. An engineering study will be prepared to better characterize applicable waste streams and refine waste volumes for planning treatment capability and throughput in the FDC. This study will involve detailed research of waste records and an analysis to determine all physical, chemical, and radiological characteristics of the waste. Results of the CERCLA process will be assessed also for waste addressed by the ER program (e.g., 618-10, 11 Burial Grounds, and 241-Z-361 tank).

3. Prepare WIPP Waste Acceptance Criteria Engineering Study. An engineering study will be prepared to assess WIPP waste acceptance requirements and impact on RH facility capacity. This information will be used in the FDC to further define required facility capability.

4. Develop Functional Design Criteria. The FDC will describe the functional requirements for retrieving and processing systems and will provide system synthesis and integration by incorporating information developed in the engineering studies as described previously. The FDC will not specify new or existing facilities or select new facility location(s).

5. Prepare Technology Survey Engineering Study. An engineering study will be prepared, surveying available technology capable of providing handling, size reduction, TRU volume reduction (e.g., decontamination and compaction), and liquid/sludge treatment for identified waste to WIPP disposal requirements. The survey will include emerging or existing technologies in the private sector as well as in the DOE Complex. Viable technologies will be selected and any technology gaps will be identified. This activity could involve vendor demonstration of equipment on simulated Hanford Site

waste streams to prove feasibility of the system/technology. Information assembled will be used to develop the best available technologies for inclusion in the CDR.

6. Prepare Facility Options Analysis. An options analysis will be prepared to select location and use of new or existing Hanford Site facilities. This analysis will serve as the alternatives evaluation used in system engineering methodology.

7. Complete Conceptual Design Report/Obtain Funding. A CDR will be used to establish a cost and schedule baseline for the design, construction, and startup of the facilities. The CDR will provide further system synthesis and integration, will form the technical baseline, and will be used to refine project cost and schedule.

8. Design/Construct/Startup Facilities. The final phase of the project will include design, construction, and startup activities for the facilities. The project will be considered complete, with all applicable M-91 milestones satisfied, when facility startup is complete.

3.3 RETRIEVAL AND TREATMENT/PROCESSING FOR WASTE ISOLATION PILOT PLANT AS THE SOLE DISPOSAL OPTION

This option describes the facilities to retrieve, store, and process the applicable waste streams (refer to Chapter 1.0, Section 1.1) for disposal at WIPP in accordance with HDW-EIS requirements to retrieve all TRU waste retrievably stored in the 200 Areas burial ground. Section 3.4 describes a proposed alternative disposition to WIPP disposal for some waste streams, and discusses new treatment capacity for processing of the adjusted waste volumes.

The proposed option was developed based on required treatment to meet WIPP waste acceptance criteria, waste generation rates, and existing waste disposition programs. The required treatment for the retrieved and forecast waste was determined by developing a matrix using the WIPP waste acceptance criteria and waste characterization to show all possible cases of treatment, as shown in Figure 3-1. The appropriate treatment was assigned to each waste based on available or forecast physical, chemical, and radiological characteristics. Waste types with similar characteristics and treatment requirements were grouped and assigned the same treatment process. Alternative options were selected for waste streams that are not amenable to meeting WIPP waste acceptance criteria or that fit better in a different program. The following sections describe the actions associated with this proposed option.

3.3.1 PUREX Storage Tunnels Waste

As discussed in Section 3.1, this PMP does not provide plans for the option of removal and treatment of the PUREX Storage Tunnels failed equipment. The final disposition plan will be developed as described in Section 3.1, Assumption 4.

3.3.2 618-10/11 Retrieval Action Plan

The actual technology development, design, and retrieval of TRU-contaminated waste from the 618-10 and 618-11 Burial Grounds will occur separately but in coordination with M-91 planning and work. The approach taken to retrieve the 618-10/11 Burial Grounds is to conduct engineering studies, complete retrieval system design, and conduct a pilot retrieval project if required.

An engineering study on the two burial grounds should be completed in time to include input in the design of the M-91 facility. Such a study could include a search of classified data, further regulatory and safety analysis, and a technology baseline to address available technologies and to identify any technology gaps. The study also would need to develop a schedule integrating the burial ground remediation with M-91, the WRAP Facility, and WIPP. Design work on the two burial grounds will need to ensure that all safety, legal, and characterization work is coordinated with M-91 requirements. A pilot project also should be considered before attempting full remediation of the burial grounds. The remediation of the 618-10 and 618-11 Burial Grounds is part of the M-16 Tri-Party Agreement Milestone series. It is suggested that the Tri-Parties meet to discuss any specifics regarding interim milestones for the burial ground work. Refer to Chapter 5.0, Section 5.5, for a discussion regarding 618-10 and 618-11 Burial Grounds retrieval schedule constraints.

3.3.3 Spent Nuclear Fuel Waste in Experimental Breeder Reactor II Casks

Thirty-nine EBR II casks currently located in the 200 West Area LLBG contain RH TRU waste consisting of test specimens of fissionable material irradiated in the EBR II and Fast Flux Test Facility (FFTF) reactors for liquid metal reactor research and development purposes. This waste has been re-designated as spent fuel (DOE 1997). Therefore, the waste does not meet WIPP waste acceptance criteria and the disposition path for this waste is retrieval followed by management under the SNF Project. It is expected that this waste will be transferred directly to the SNF Project following retrieval, and therefore, planning for additional storage capacity is not required.

3.3.4 Glass Logs

In November 1984, DOE and the Federal Minister for Research and Technology of the Federal Republic of Germany (FRG) signed an agreement to fabricate isotopic sources of radiation and heat for use in developing processes for the treatment and immobilization of high-level waste (HLW). Under contract to DOE, Pacific Northwest Laboratories (PNL) fabricated a total of 34 stainless steel canisters with a borosilicate glass matrix that contained various radioisotopes obtained from fuel reprocessing waste. The logs were never shipped to the FRG and are now stored at 2420-W in the 200 West Area. This waste represents less than 1 percent of all stored TRU/TRUM waste. On January 14, 1997, the B&W Hanford Company designated the 34 glass filled canisters as nonhazardous, RH TRU. *Waste Certification Summary #C229-324-001*, states that 2 of the 34 canisters are "not defense related but came from spent commercial reactor fuel". It was also recognized at that time that the canisters would not meet RH WIPP WAC nor have they been addressed as part of a national program for disposal (FDH 1997).

The 2 canisters fabricated using commercial source material cannot be disposed of at WIPP because of WIPP's restriction on disposal of non-defense related materials. As packaged, the remaining 32 canisters likely will not meet the RH WIPP waste acceptance criteria that is presently under development due to wattage considerations. The available waste characterization data for the canisters is complete and no further characterization is anticipated. In summary, this waste is treated (by vitrification), well packaged, well characterized, and is ready for disposal, and therefore will not impact the RH TRU facility design. Investigation of potential disposal paths (e.g., disposal in the greater than Class C repository, WIPP, onsite disposal) may be considered during the Waste Characterization engineering study. Because the waste currently is stored in the 200 West Area, planning for additional storage capacity is not required (refer to data in Appendix B). The disposition path for this waste is storage until a disposition option is selected by WMP.

3.3.5 Tank Farms Long-Length Equipment

LLE from tank farms cleanup operations is a waste stream with unique handling and processing requirements because of size, weight, and waste characteristics. The LLE could reach 21 meters in length, 2 meters in width, and weigh in excess of 40 metric tons. The current SWIFT report volume of 1,166.6 cubic meters includes the equipment itself, shielding, trapped HLW sludge, and void space within the storage containers (refer to Appendix B showing more data concerning LLE).

A specially designed size reduction system would be required to handle the LLE, to separate and dispose of trapped high-level sludge, and to size reduce the waste into pieces capable of being loaded into the 0.66 meter diameter x 3.07 meter long RH canister. This waste volume represents approximately 19 percent of all forecast TRU/TRUM waste, but only a fraction of the total LLE currently in the tanks that has no path forward. Constructing a treatment system for the extracted LLE only would represent a partial solution for the much larger problem of tank hardware disposition. Furthermore, the TRU waste characterization volume of the LLE is only a projection based on estimated trapped sludge that might not materialize. Therefore, it is more expedient, more cost effective, and less risky to include the extracted LLE in the overall tank farm hardware disposition program.

The planned action under this PMP is to provide storage for the extracted LLE until the LLE can be integrated into the tank farm hardware disposition program. CWC will be capable of supplying the required storage space when this waste is forecast to arrive; therefore, planning for additional storage capacity is not required.

3.3.6 Retrieval of Retrievably Stored Transuranic/Transuranic Mixed Waste

A substantial portion of the TRU/TRUM waste requires removal from retrievable trench storage and from caissons. Except for caissons, most of the waste to be retrieved was stored in contamination free drums/boxes and as self-contained equipment. The action plan for retrieval of this stored waste will be similar to the plan described in Section 3.3.2 for the 618-10 and 618-11 Burial Grounds. Coordination of the two retrieval efforts is expected to reduce risk and cost of the two projects.

Figure 3-2 shows the CH and RH waste streams in the 200 West Area requiring retrieval. Aboveground storage also is shown to complete the waste material balance.

Trench Retrieval. As shown in Figure 3-2, approximately 62 percent of the retrievably stored CH waste volume is in extra large containers, while only 1.4 percent is in containers smaller than a SWB. Approximately 1,200 cubic meters of CH TRU waste is packaged in containers weighing greater than 18 metric tons.

The waste presents unique challenges pertaining to retrieval, handling, and transportation to the treatment facility. For example, retrieval of heavy boxes from the trenches, placing the boxes in overpacks as needed, and loading the overpacks for transportation is expected to be a complex operation. In addition, most of the large boxes contained in the trenches were 'dragged' into the trenches or placed using large material handling equipment installed inside the trenches. Retrieval of these large and heavy items might require emptying the trenches and removal of LLW disposed in the same trench. There is also a high probability that the FRP containers could be breached and/or the container could provide little structural integrity for the waste. The retrieval system could require design and use of involved material handling and contamination containment systems, given the physical parameters and condition of the containers. Once retrieved, specialized transport systems would be required to move the containers to the treatment/processing facility.

As shown in Figure 3-2, most of the RH waste in trenches is either in drums or large containers, but no extra large containers are present. The same CH TRU/TRUM waste retrieval system could be used for RH TRU/TRUM waste with modifications for shielding.

Caisson Retrieval. The caissons located in the 200 West Area (218-W-4B LLBG) are underground, cylindrical vaults used to store dry RH TRU waste. The caisson construction consists of a reinforced concrete tank (corrugated cylinders with concrete slabs on both ends) 3 meters tall and 2.4 meters in diameter, placed vertically in the ground. One 0.9 meter-offset pipe and one 0.3-meter vent pipe extend from the caisson top to grade level (approximately 4.5 meters). There are four caissons containing TRU waste in the 218-W-4B LLBG, labeled Alpha 1 through Alpha 4. Waste contained in the caissons was generated from examination of irradiated and experimental fuels from FFTF and other sources. Waste containers commonly referred to as 1-gallon paint cans, 5-gallon cans, 4-inch tin cans, 2-gallon cans, and some noncontainerized fuel elements are located in the caissons. A total of 5,534 waste items have been deposited in the four Alpha caissons between 1970 and 1988. Container breach in the caissons can be confirmed in Alpha 3 and 4 because of ventilation system contamination. In addition, the waste weights inside the caissons are 3,833, 4,477, 3,744, and 5,209 kilograms for Alpha 1 through Alpha 4, respectively. The four Alpha caissons contain approximately 5,770 curies total TRU activity as of December 31, 1998.

A complex RH retrieval and onsite repackaging system will be required to handle breached containers with high radiation dose rates. The system also will require a special design that will be able to accommodate the geometry of the caissons and the physical and radiological characteristics of the waste.

3.3.7 Storage Capacity for Transuranic/Transuranic Mixed Waste

CWC will provide temporary storage capacity for forecast CH and RH TRU/TRUM waste. Existing LLBG trenches might be used for temporary storage of RH TRU waste.

K Basins sludge will require new storage capacity. The SNF Project/WMP currently are managing a project to convert a portion of the T Plant Complex canyon into storage space for K Basins sludge. This effort will allow accelerated removal of sludge from the K Basins to reduce risk to human health and the environment. The technical scope, as well as key risks and assumptions associated with using T Plant Complex for this mission, were defined. The K Basins sludge storage project further will define the design, construction, cost, and schedule for creation of this storage capacity. A change request was prepared in the third quarter of FY 2000 to establish target dates and milestones for interim storage of K Basins sludge at T Plant Complex. The sludge will be stored at T Plant Complex until treatment capacity, as provided by M-91-03, becomes available.

3.3.8 Processing of Contact-Handled Transuranic/Transuranic Mixed Waste

Figure 3-3 shows a block diagram identifying all required waste treatment for the stored and forecast volumes to produce a waste with physical, chemical, and radiological characteristics acceptable for WIPP disposal in containers that will meet WIPP transportation and disposal requirements. TRU volume reduction technologies (e.g., decontamination and compaction) were not considered in this PMP but will be evaluated during the design phase of the project when the waste characteristics are better defined.

Sort/Repack Large Containers. Waste in large containers (3,540.6 cubic meters) and extra large containers (4,526.9 cubic meters) will require sorting and repackaging to separate small size waste from larger size waste. The sorting operation will include material handling equipment to open boxes, separate large items, and to support size reduction of waste items.

Size Reduction. Oversized items (4,205.1 cubic meters) will be size reduced before being packaged in a WIPP compliant container (drum or SWB) at the second sort/repack operation. Empty waste boxes constructed of wood, fiberglass reinforced plywood (FRP), and fiberboard also will be size reduced. Empty concrete and metal waste boxes could be recycled as burial containers for LLW or size reduced for onsite disposal as LLW. Furthermore, four high integrity concrete block ion exchange modules (IXMs) will require breaking and size reduction to fit into drums. Size reduction of these monoliths will require containment of resin beads contained in the concrete embedded ion exchange columns (IXCs).

Sorting. A second sorting operation will be performed on small container waste (8,092.2 cubic meters) as well as size-reduced waste for the purpose of removing waste items that do not comply with the WIPP waste acceptance criteria (noncompliant waste items) or segregating non-TRU/TRUM waste.

Organic Destruction/Deactivation. An organic destruction process will be used to destroy ignitable organics and PCBs contained in ignitable liquids and PCB contaminated waste (19.5 cubic meters).

Solidification/Neutralization. Liquids, sludges, oxides, as well as residual liquid waste streams from the organic destruction/deactivation process (99.5 cubic meters), will be treated through a solidification process. With selection of the proper treatment compound, solidification also will serve to neutralize corrosive liquids.

Sort/Survey/Decontamination. Solid waste contaminated with PCBs (69.8 cubic meters), containing mostly ballasts mixed with various debris, will require sorting to separate the TRU waste from the ballasts containing PCBs. It is assumed that the ballasts (59.3 cubic meters) either are non-TRU or can be decontaminated easily to non-TRU waste and treated commercially before final disposal in the LLBG or the Mixed Waste Disposal Units.

NDA/NDE. After processing, all CH waste packages in WIPP compliant containers (11,945.6 cubic meters) will be sent to the WRAP Facility for TRU screening followed by certification and loading for shipment to WIPP if determined to be TRU. Waste that is determined to be LLW by the verification process will be disposed accordingly.

3.3.9 Processing of Remote-Handled Transuranic/Transuranic Mixed Waste

Figure 3-4 shows a block diagram identifying all required waste treatment for the stored and forecast volumes to meet the WIPP transportation and packaging requirements and the terms of the WIPP final status permit for RH waste. In the absence of WIPP waste acceptance criteria for RH waste, it is conservatively assumed that the WIPP final status permit requirements that affect the treatment facility capabilities for CH TRU/TRUM waste will apply equally to RH waste. The approved WIPP final status permit and its impact on RH treatment/processing will be evaluated to ensure the project addresses all relevant acceptance criteria. TRU waste volume reduction technologies (e.g., decontamination and compaction) were not considered here but will be evaluated during the design phase of the project where the waste characteristics and the treatment standards are better defined.

Sort/Repackage RH Containers. Large and extra large containers will require sorting and repackaging to separate small size waste from large sized waste. This includes CH waste determined to be RH (118.9 cubic meters), stored waste (155.4 cubic meters), and forecast waste (196.4 cubic meters) in large and extra large containers. An estimated 122.8 cubic meters of small size waste is expected to be removed from large and extra large containers and repackaged in drums.

Size Reduction. Items too large to fit into drums or into a WIPP-compliant canister (348 cubic meters) will be size reduced before being packaged in a WIPP-compliant container at the second sort/repack operation.

Sort/Repack Small Containers. Drums and small containers that are determined to be RH (37.8 cubic meters) during CH drum retrieval, stored and forecast RH drums and small containers (230.8 cubic meters), and size reduced items (348 cubic meters) will require sorting to remove noncompliant items from the waste and will be repackaged into WIPP-compliant containers.

Sludge Removal/Organic Destruction/Deactivation. PCB/reactive sludge (49 cubic meters) from K Basins will be extracted from its packaging and will be treated through a process that has a dual function of destroying PCBs and oxidizing the reactive uranium metal.

Solidification/Neutralization. Liquids and corrosives (51.2 cubic meters) as well as residual liquid waste streams from sludge treatment will be treated through a solidification process. With selection of the proper treatment compound, solidification also will serve to neutralize corrosive liquids.

Verification/Certification/Loadout. After processing, all RH waste packages in WIPP-compliant containers (1,353.6 cubic meters) will be transferred to a station to be verified, certified, and loaded for shipment to WIPP. Waste that is verified to be LLW will be disposed in the LLBG.

3.4 RETRIEVAL AND TREATMENT/PROCESSING FOR WIPP AS PRIMARY DISPOSAL WITH AN ONSITE DISPOSAL OPTION

This section proposes an alternative basis to the one described in Section 3.3 for acquiring new capacity for the retrieval, treatment, and storage of CH and RH TRU/TRUM waste. The proposed facilities discussed in Section 3.3 are based on the assumption that WIPP is the only available disposal facility for the applicable TRU/TRUM waste streams. The proposed option in this section would make use of onsite disposal for some waste streams while maintaining WIPP as the primary disposal facility for most of the waste.

The current governing NEPA documentation for TRU waste, the HDW-EIS ROD requires that all TRU waste retrievably stored in the 200 Areas burial grounds be retrieved for disposal at WIPP. However, it must be acknowledged that some waste streams present a potentially high risk of personnel exposure and environmental impact during retrieval and processing. Therefore, a possible disposition path for these waste streams would be disposal in-place in the LLBG. The proposed option was developed based on the information presented in Section 3.3 and by taking into consideration as low as reasonably achievable (ALARA) principles, and impact of operations on the environment and personnel. The following sections describe the actions associated with this proposed option.

3.4.1 618-10/11 Retrieval Action Plan

The retrieval action plan for the 618-10/11 Burial Grounds is the same as that described in Section 3.3.2.

3.4.2 Spent Nuclear Fuel Waste in Experimental Breeder Reactor II Casks

The disposal path for this waste stream is the same as that described in Section 3.3.3 and shown in Figure 3-2.

3.4.3 German Glass Logs

The disposal path for this waste stream is the same as that described in Section 3.3.4 and shown in Figure 3-2.

3.4.4 Long-Length Equipment

The disposal path for this waste stream is the same as that described in Section 3.3.5 and shown in Figure 3-4.

3.4.5 Onsite Disposal

The current governing NEPA documentation for TRU waste, the HDW-EIS ROD, requires that all TRU waste retrievably stored in the 200 Areas burial grounds be retrieved for disposal at WIPP. It must be acknowledged that those streams listed in Sections 3.4.5.1 through 3.4.5.4 present a potential high risk of personnel exposure and environmental impact during retrieval and processing. Therefore, a possible disposition path option of disposal in-place in the LLBG is presented. As retrieval of these streams will present a number of as yet unresolved technical difficulties, the facility cost and schedule presented in this PMP includes the assumption that these streams will be disposed in-place. The onsite disposal option is based on the premise that the relative risk to personnel and the environment associated with retrieval and subsequent processing is greater than the same type of risk associated with in-place disposal. As shown in Table 3-1, these waste streams represent a small percentage (approximately 7.4 percent) of the total retrievably stored TRU/TRUM waste volume.

The in-place disposal option can be supported by DOE Order 435.1 and 40 CFR 191. As discussed in Chapter 2.0, Section 2.4, the SW-EIS will serve as the NEPA documentation for this option. If the ROD for the SW-EIS selects this option, a performance assessment will be required to prove through analysis that Hanford Site disposal facilities meet the appropriate disposal site performance objectives listed in 40 CFR Part 191. This assessment will be performed for TRU waste disposed on November 18, 1985, and later, and will be similar to WHC-EP-0645, *Performance Assessment for the Disposal of Low-Level Waste in the 200 West Area Burial Grounds*, and WHC-SD-WM-TI-730, *Performance Assessment for the Disposal of Low-Level Waste in the 200 East Area Burial Grounds*. Waste disposed onsite before November 18, 1985, does not require performance assessment justification as the CFR rules do not apply to this waste. However, the SW-EIS will provide an analysis that will be substantially equal to that of 40 CFR 191 in analyzing potential radiation doses to the public from the waste streams described in Sections 3.4.5.1 through 3.4.5.4.

The LLBG are a recognized waste disposal unit and two performance assessments for LLW were performed and approved. Much of this LLW resides with TRU waste in the same disposal unit. WHC-EP-0645 and WHC-SD-WM-TI-730 were used to demonstrate that LLW disposal practices in the 200 East and 200 West Areas are in compliance with disposal site performance objectives listed in DOE Order 5820.2A. Parameters evaluated were disposal unit construction, potential dose releases to personnel and the environment, intruder release scenarios, and groundwater contamination. The performance assessments concluded that all performance objectives would be satisfied for the LLBG.

3.4.5.1 Caissons

Refer to Section 3.3.6 for a description of the 200 West Area caisson content and physical description. The 200 West Area caisson waste volume is 23.3 cubic meters and represents approximately 0.1 percent of all stored TRU/TRUM waste (refer to Table 3-1).

A complex RH retrieval and onsite repackaging system will be required to handle breached containers with high radiation dose rates, thus increasing the risk of personnel exposure. In addition, contamination spread and potential environmental impacts as a result of retrieval/processing could be substantial. Onsite disposal for the 200 West Area caissons therefore would lower risk to people and the environment and support ALARA.

As discussed in Section 3.4.4, the PA formal risk assessment process in accordance with 40 CFR 191 requirements will be performed for in-place disposal and will take into account location, engineering structural aspects, passive and active institutional controls, and added engineering barriers such as stabilization of the caissons. This risk of retrieval, when compared against the risk associated with in-place disposal, is expected to be higher. In contrast, the risks incurred by retrieving the 618-10/11 Burial Grounds caissons is smaller than the risk incurred by in-place disposal of the caisson waste. The CERCLA process is expected to produce a ROD requiring retrieval of the 618-10/11 Burial Grounds caissons implying that risk to people and the environment associated with in-place disposal is unacceptable based on the location of the caissons, structural integrity, condition of the burial grounds, and waste characteristics.

3.4.5.2 Ion Exchange Modules

Four K Basin IXMs currently in storage consist of ion exchange columns embedded in concrete having outside dimensions of 2.2 meters x 1.8 meters x 2.0 meters and weighing approximately 20,000 kilograms each. Two of these columns are located aboveground in the 100 K Area, and the other two are located in trench 24 of the 218-W-4C LLBG. The contamination is well contained in the ion exchange columns, which are in turn embedded in concrete. The IXMs initially were designed to be disposed onsite in a complete unit as LLW. The IXMs are designated as TRU waste. Further investigation will be performed to verify this designation or to re-designate the waste as non-TRU, which, in this case, will not be included in the scope.

To meet WIPP packaging/acceptance requirements for disposal offsite, the IXMs (assuming these are TRU) would require breaking and size reduction of the high integrity concrete block to fit into drums, risking spread of contaminated resin beads. Size reduction of these monoliths presents a considerable risk to personnel and would require substantial personal protective equipment to mitigate the hazard to treat a volume totaling approximately 0.2 percent of all stored TRU/TRUM waste (refer to Table 3-1).

Therefore, onsite disposal would support ALARA and would avoid potential environmental impacts. The two aboveground IXMs would be placed with the already buried IXMs in the 200 West Area. A performance assessment in accordance with 40 CFR 191 requirements probably will be required for this waste stream. The location as well as other factors will be used to weigh the risk to people and the environment associated with disposing of waste in-place, against the risk associated with retrieval and subsequent processing, including size reduction.

3.4.5.3 Heavy Containers

Approximately 1,200 cubic meters (7.1 percent of all stored TRU/TRUM waste as shown in Table 3-1) of CH TRU waste are packaged in containers weighing greater than 18 metric tons. This waste is mainly debris contained in two concrete and 20 FRP boxes buried alongside LLW in a 200 West Area LLBG.

These heavy containers are now designated in SWITS as TRU waste. However, all of these containers were buried on or before 1980 when the limit for TRU waste designation was only 10 nanocuries per gram, making the waste suspect TRU. Further investigation will be performed to verify this designation or re-designate the waste as non-TRU, which, in this case, will not be included in the scope.

The waste presents unique challenges pertaining to retrieval, handling, transportation, packaging, and size reduction. There is a high probability that the FRP containers would be breached and/or the container would provide little structural integrity for the waste, making required specialized retrieval, lifting, and onsite repackaging systems complex, resulting in high safety risk. Once retrieved, specialized transport systems would be required to move the containers to the treatment/processing facility where handling and size reduction again would necessitate complex handling systems. These considerations translate into a high risk of contamination spread and personnel exposure.

Onsite disposal therefore would support ALARA and would avoid potential environmental impacts. A performance assessment in accordance with 40 CFR 191 requirements probably will be required for this waste stream. The location as well as other factors will be used to weigh the risk to people and the environment associated with disposing of waste in place, against the risk associated with retrieval. Stabilization of the trenches in support of in-place disposal of this waste stream will be considered during the performance assessment process.

3.4.5.4 Breached and Questionable Integrity of Containers

One area of concern during retrieval of stored waste is retrievability of the containers without exposing personnel and the environment to two high risk factors: container weight and container integrity. Data exist for stored container weight, allowing evaluation of relative retrieval risk for high weight containers as described in the previous section. Little information is available, however, regarding buried container integrity. Containers having poor structural integrity or containing exterior contamination would be identified during the retrieval process.

Onsite disposal therefore would support ALARA and would avoid potential environmental impacts through contamination spread and airborne release. A performance assessment in accordance with 40 CFR 191 requirements probably will be required for this waste stream. The PA analysis discounts the benefit of waste container as a barrier and considers the waste in direct contact with the environment. The disposal location as well as other factors will be used to weigh the risk to people and the environment associated with disposing of waste in-place, against the risk associated with retrieval. The TRU radionuclides generally are considered less mobile than other radionuclides by hydrogeological transport phenomena. Stabilization of the trenches in support of in-place disposal of this waste stream will be considered during the performance assessment process.

3.4.6 Storage Capacity for Transuranic/Transuranic Mixed Waste

Storage capacity for this option is the same as that described in Section 3.3.7.

3.4.7 New Facilities and their Capabilities Based on Option Including Onsite Disposal

New processing capacity to retrieve and treat waste to meet WIPP waste acceptance criteria will be provided for the waste volumes that were not addressed under Sections 3.4.1 through 3.4.6. The treatment/processing facilities must have the capacity to treat the adjusted waste stream volumes and meet the requirements set forth in the WIPP waste acceptance criteria. No consideration was given to processes such as decontamination that could reduce or re-designate the TRU/TRUM waste volumes.

This approach will be considered during the conceptual design phase when more waste information/characterization is developed. However, enough information has been developed and presented in the previous sections to warrant setting the following preliminary general requirements for the facilities. The retrieval, treatment, storage, and/or disposal units will be acquired in accordance with applicable regulations and DOE Orders.

Facility Physical Boundaries. The physical boundaries of the project include treatment facilities for CH and RH waste, support facilities, administrative office space, and required utility connections to existing onsite utilities for each of the facilities. The boundaries exclude site infrastructure and transportation. All equipment used for retrieval will be mobile; therefore, a definition of physical boundaries is not applicable.

3.4.7.1 Retrieval Systems

Retrieval capacity for this option is similar to that described in Section 3.3.6 except for caissons, heavy containers, and breached containers (refer to Figure 3-6). Use of the onsite disposal option for the high-risk waste will simplify retrieval of the remaining waste streams. Retrieval systems will provide the capability to retrieve waste shown in Figure 3-6, which includes TRU waste boxes up to 18 metric tons in weight and 65 cubic meters in size, currently stored underground in LLBG trenches. A retrieval system will be designed to provide capacity to remove trench soil caps, tarpaulins, plywood or sheet metal coverings, and loading and delivery of boxes to the treatment facilities.

3.4.7.2 Contact-Handled Facility

Refer to Figure 3-7 for CH TRU/TRUM waste processing for this option.

Sort/Repack Large Containers. The CH facility will be designed to sort/repack approximately 6,900 cubic meters of CH, stored and forecast, large and extra large boxed waste over the Hanford Site life cycle. Stored waste comprises 98 percent of this volume and consists of approximately 600 containers, all weighing less than 18 metric tons and ranging in size from 2.1 cubic meters to 64.6 cubic meters. The sorting operation will include material handling equipment to open boxes, to separate large items, and to support size reduction of waste items. The final operations performed in the sort/repack area will be loading of waste into certifiable containers and closing the containers.

NDA/NDE. NDA/NDE capability will be provided by the WRAP Facility for a total volume of approximately 3,888 cubic meters of small container waste.

Size Reduction. The CH facility will provide the capability for size reduction using manually operated tools for approximately 4,096 cubic meters of large inorganic debris material that does not fit in SWBs. Dimensions and thickness of materials to be size reduced will be determined in the engineering study and FDC. Waste boxes constructed of wood, FRP, and fiberboard also could be size reduced. Waste boxes constructed of concrete and metal could be recycled as burial containers for LLW.

Sorting. A second sorting operation will be performed on approximately 8,006 cubic meters of small container waste as well as size reduced waste for the purpose of removing waste items that do not comply with the WIPP waste acceptance criteria. The CH facility will include material handling equipment to move, open, empty, and close boxes.

PCB Treatment. PCB treatment will be performed to treat a volume of 8.8 cubic meters of oil contaminated with PCBs. A specific technology will be selected in the engineering study/FDC (technology survey) from thermal treatment (e.g., molten salt oxidation, vitrification, pyrolysis, steam

reforming) or chemical treatment including chemical oxidation, reduction, or dechlorination. Depending on the WIPP permit, a simple process such as solidification might suffice.

Solidification/Neutralization/Deactivation. A process of solidification will be provided to convert a total volume of approximately 91 cubic meters of liquid/sludge into solids. Approximately 83 percent of the waste that will be solidified is forecast waste in the form of 241-Z-361 tank sludge. The system will be designed to perform neutralization of corrosives by proper selection of chemical additives. Small amounts of ignitable aqueous solutions could be deactivated by neutralization and solidification in this system. The system will be designed to handle liquids and sludges and will be operated in batch mode.

Certification/Loadout. The WRAP Facility will be used for verification/certification and loadout operations of sorted and solidified waste packaged in certifiable containers before shipment to WIPP.

3.4.7.3 Remote-Handled Facility

Refer to Figure 3-8 for RH TRU/TRUM waste processing for this option.

Sort/Repack Large Containers. The RH facility will be designed to sort/repack approximately 300 cubic meters of stored and forecast RH large boxed waste, and approximately 44 cubic meters of ion exchange column waste. Stored waste represents approximately 50 percent of the large container volume and consists of 65 containers, all weighing less than 18 metric tons and ranging in size from 0.4 cubic meter to 9.1 cubic meters. The sorting operation will include remote material handling equipment to enable opening boxes, to separate large items, and to support size reduction of waste items. The final operations performed in the sort/repack area will be loading of waste into containers and closing the containers.

Size Reduction. The RH facility will provide the capability, using remotely operated tools, for size reduction of 185 cubic meters of large inorganic debris material that does not fit in drums. Dimensions and thickness of materials to be size reduced will be determined in the engineering study and FDC. Waste boxes constructed of wood, FRP, and fiberboard also could be size reduced. Waste boxes constructed of concrete and metal could be recycled as burial containers for LLW.

Sorting. A second sorting operation will be performed on approximately 425 cubic meters of drum and small container waste as well as size reduced waste for the purpose of removing noncompliant waste items. The RH facility will include remote material handling equipment to move, open, empty, and close boxes. The ion exchange columns will be repacked in RH canisters using remote lifting devices.

Solidification/Neutralization/Deactivation. A process of solidification will be provided to convert a total volume of 51.2 cubic meters of liquids and/or sludges into solids. All of this waste is forecast, with 49 cubic meters of sludge coming from K Basins in 612 cubic meters of storage containers. Handling equipment will be provided to remove the sludge from the packaging. The treatment system will be designed to handle liquids and sludges and will be operated in batch mode. The treated waste will be packaged in drums.

Verification/Certification. The RH facility will provide the capability to verify if waste packaged in drums (1,206.6 cubic meters) meets the 100 nanocuries per gram segregation limit for TRU waste, and also to perform certification of TRU waste before shipment to WIPP.

Loadout. Loadout facilities will be provided to load RH drums into the Nuclear Regulatory Commission RH72-B shipping canister, load the canister into the shipping cask, and prepare the shipment for transportation to WIPP.

Table 3-1. Onsite Disposal Waste Volume and Total TRU/TRUM Stored Inventory.

		Volume, cubic meters	Percent of Total TRU/TRUM Inventory
TRU/TRUM waste inventory (stored)	Contact-handled drums (non M-91 projects)	8,400.0	50.0
	CH Non-drum Containers	8,200.0	49.0
	All RH Containers (M-91 project)	210.0	1.0
Onsite disposal waste category	Caissons (RH)	23.3	0.1
	Ion exchange modules (CH)	31.5	0.2
	Heavy containers (CH)	1,180.7	7.1
	Breached containers (CH)	Unknown	Unknown
	Total Onsite Disposal	1,235.5	7.4
	Total TRU/TRUM Inventory *	16,710.0	100.0

* Does not include forecast waste.

TREATMENT (WIPP-WAC)			TRU(M) WASTE CHARACTERIZATION	LIQUID			SLUDGE			SOLID		
				R	M	P	R	M	P	R	M	P
	PHYSICAL		SORTING							X	X	X
			SIZE RED.							X	X	X
	CHEMICAL		ORGANIC DEST.		X	X		X	X		X	X
			PCB TREATMENT			X			X			X
			DEACTIVATION (NEUTR., OXID.)	X	X	X	X	X	X	X	X	X
			SOLIDIFICATION	X	X	X	X	X	X			
	RADIOACTIVE		CONCENTR. RED.	X	X	X	X	X	X	X	X	X

Figure 3-1. Treatment Matrix for Transuranic/Transuranic Mixed Waste (R=radioactive only, M=mixed, P=PCB contaminated).

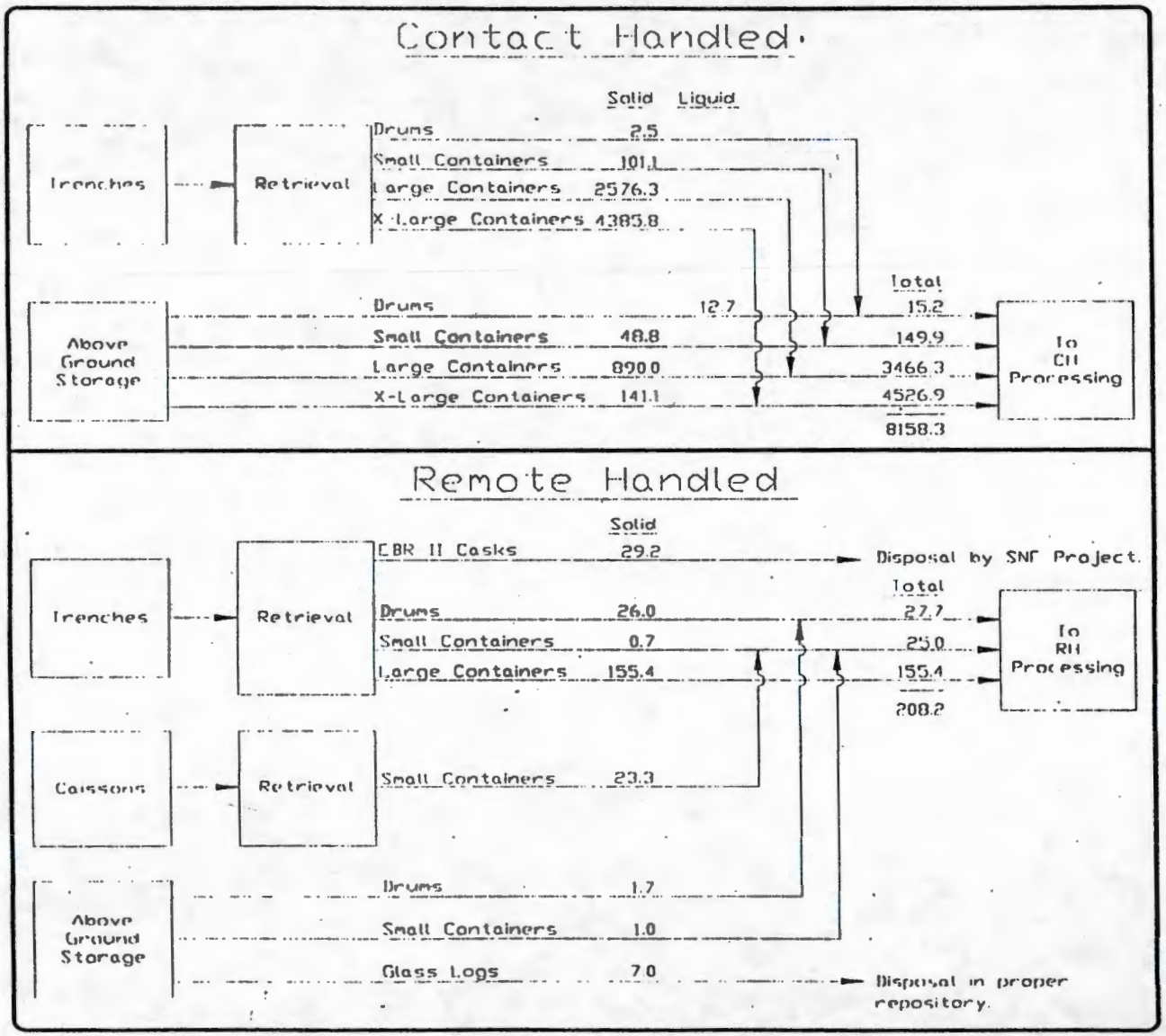

Figure 3-2. Stored Waste Location and Retrieval for Waste Isolation Pilot Plant as the Sole Disposition Option (cubic meters).

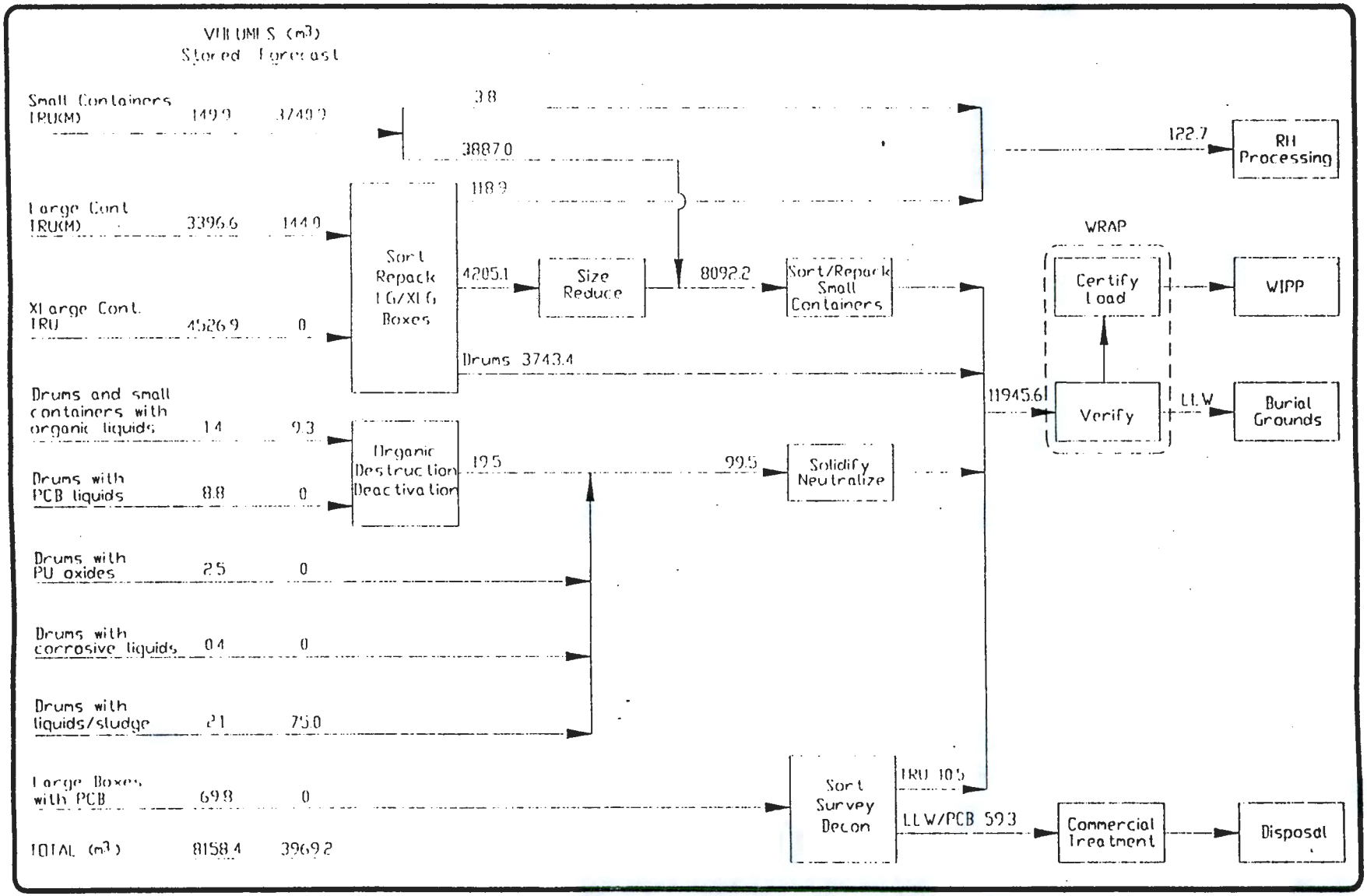

Figure 3-3. Contact-Handled Transuranic/Transuranic Mixed Waste Treatment/Processing for Waste Isolation Pilot Plant as the Sole Disposition Option (cubic meters).

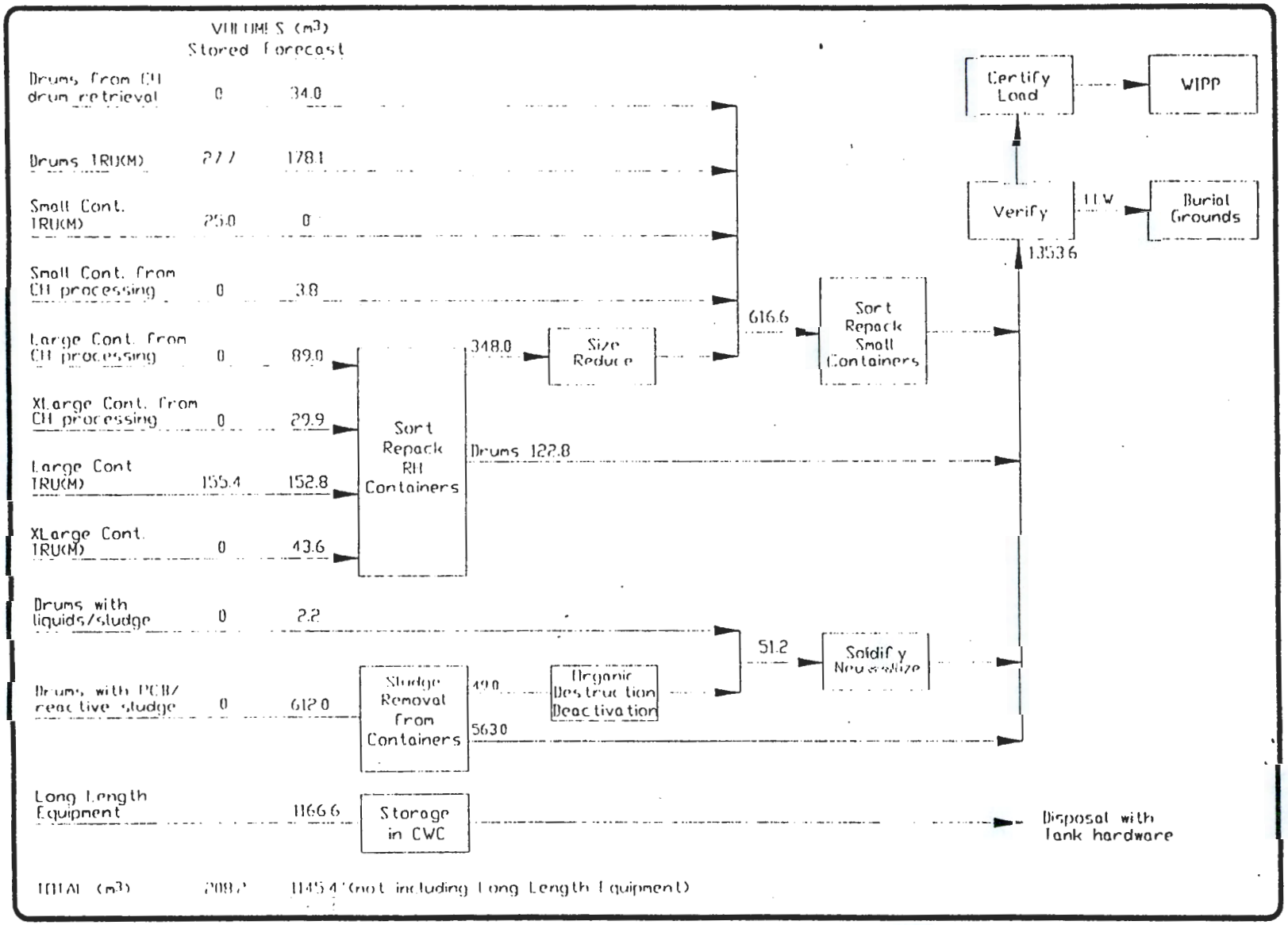

Figure 3-4. Remote-Handled Transuranic/Transuranic Mixed Waste Treatment/Processing for Waste Isolation Pilot Plant as the Sole Disposition Option (cubic meters).

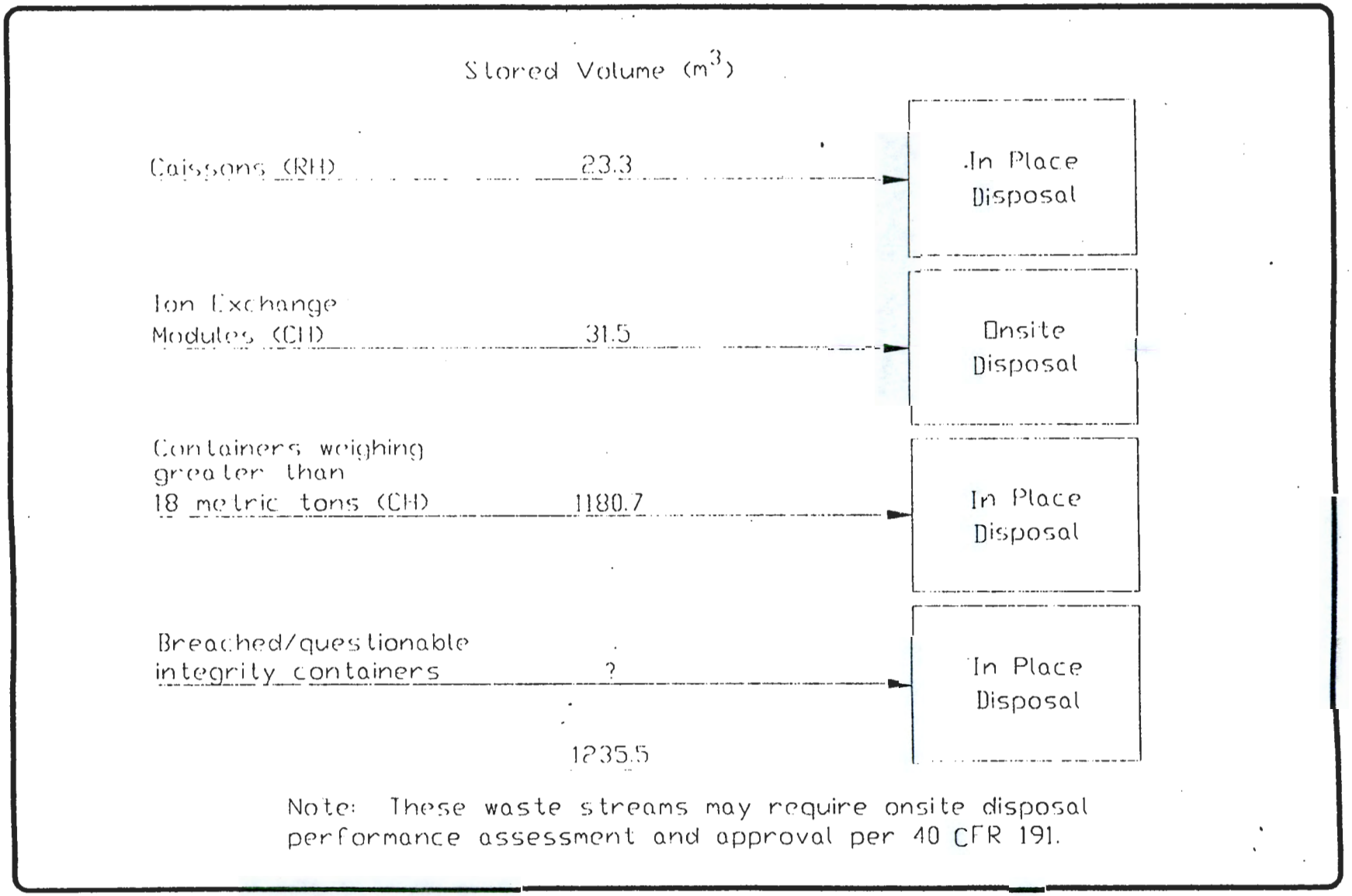

Figure 3-5. Alternative Disposition Waste Volumes (cubic meters).

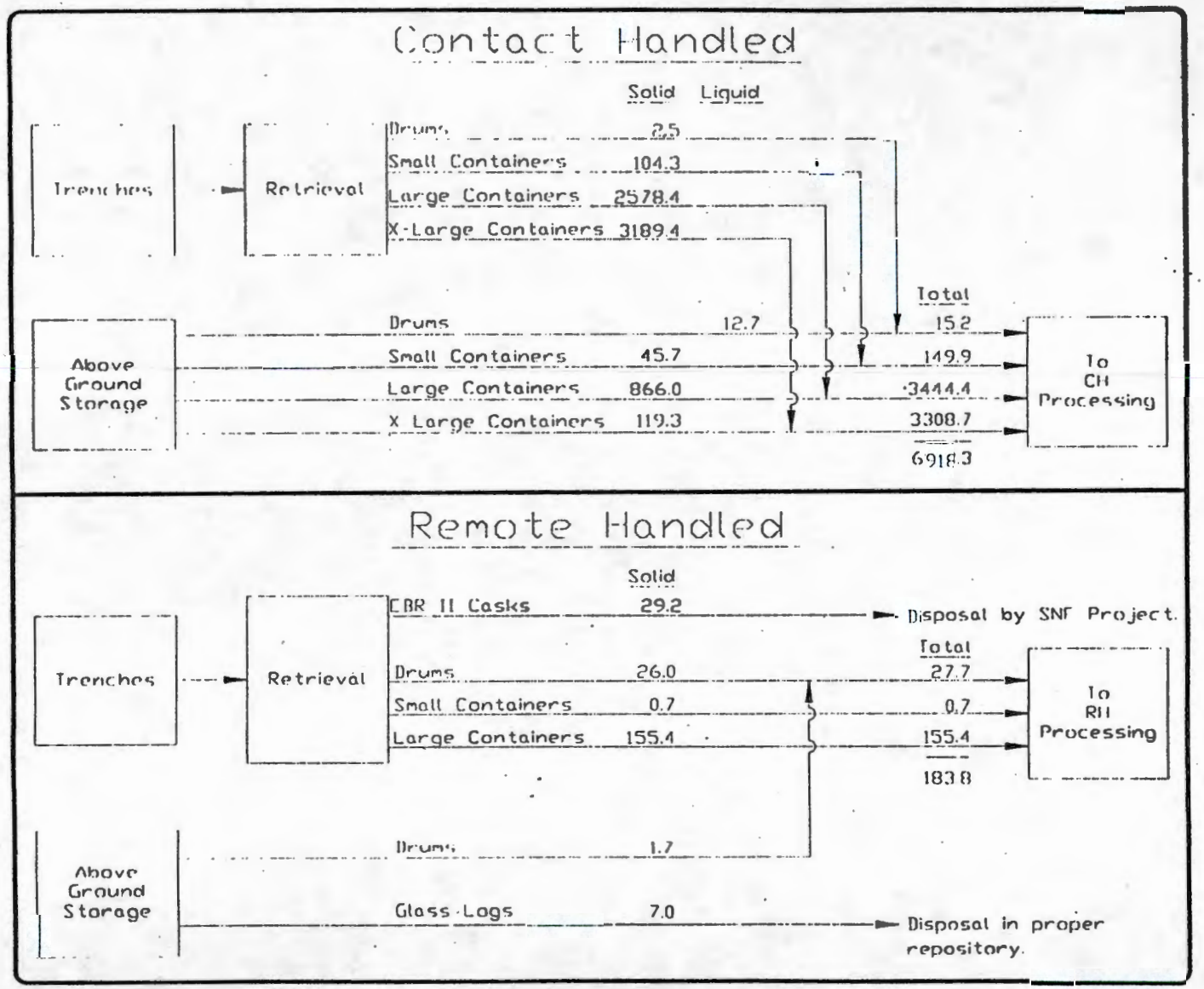

Figure 3-6. Stored Waste Location and Retrieval for Option Including Onsite Disposal (cubic meters).

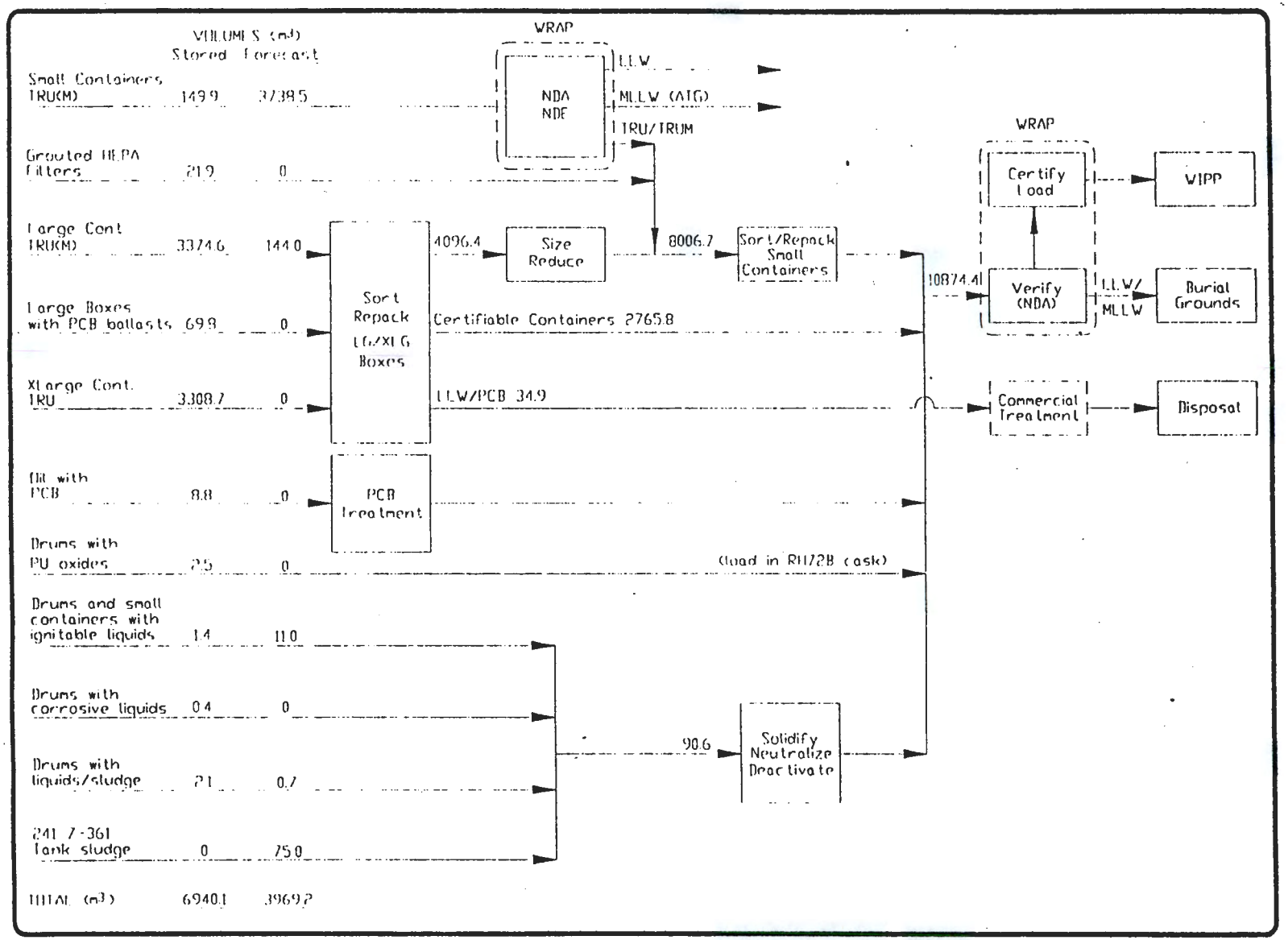

Figure 3-7. Processing for Contact-Handled Transuranic/Transuranic Mixed Waste for Option Including Onsite Disposal (cubic meters).

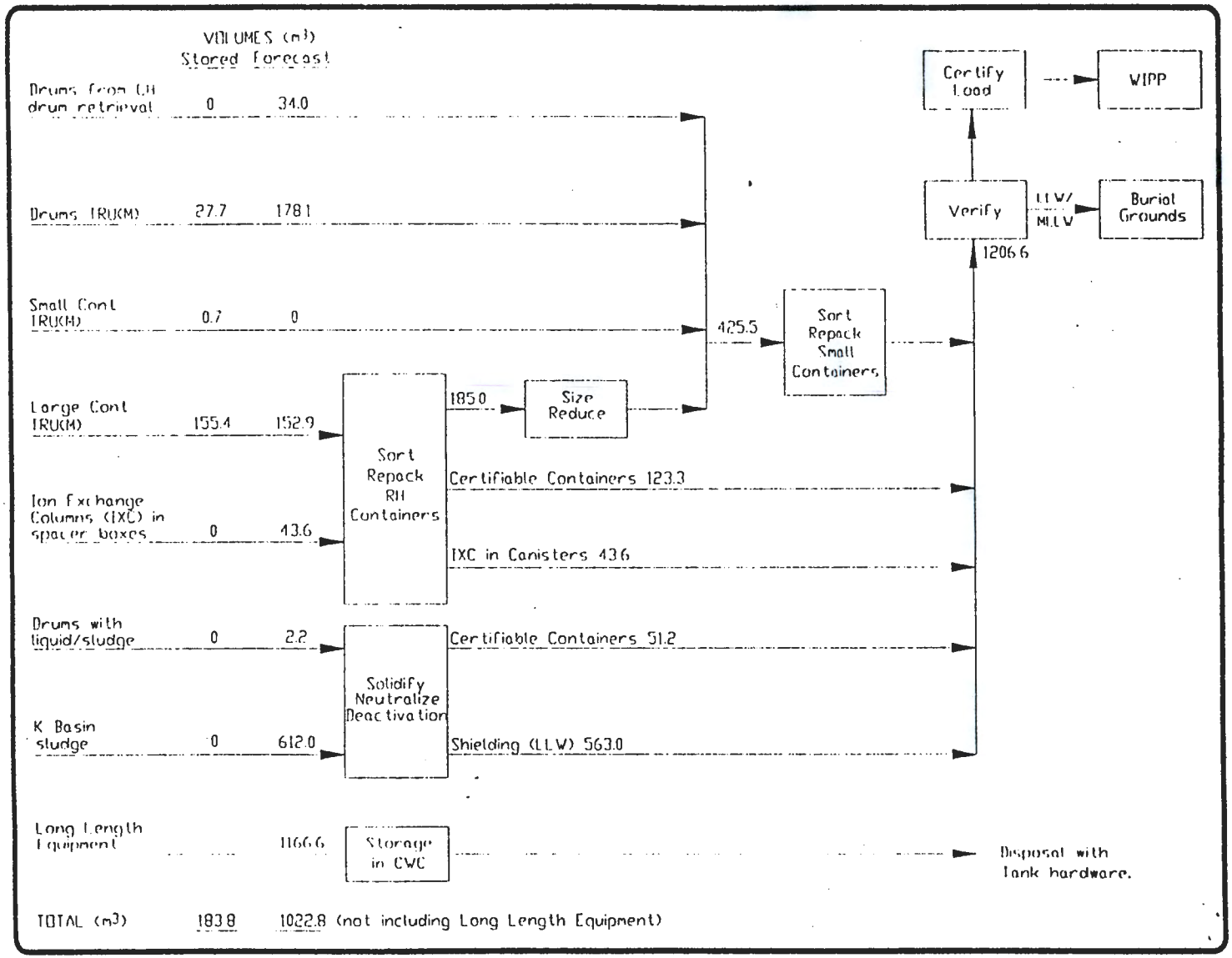

Figure 3-8. Processing for Remote-Handled Transuranic/Transuranic Mixed Waste for Option Including Onsite Disposal (cubic meters).

4.0 WORK BREAKDOWN STRUCTURE, SCHEDULE, AND COST

This chapter provides a discussion of work breakdown structure, schedule, and cost for new treatment facilities described in Chapter 3.0.

4.1 WORK BREAKDOWN STRUCTURE

Figure 4-1 shows the project WBS for new treatment facilities described in Chapter 3.0 by relating elements of work to each other and the end product. Each element is a discrete portion of products and services that form the overall project. Descending levels provide increasing detail and definition of the end objective. The number of levels depends on the scope and complexity of the individual element and the degree of control desired.

New facilities for the option presented in Chapter 3.0 include retrieval systems, a CH treatment/processing facility, and a RH treatment/processing facility. The summary WBS in Figure 4-1 depicts the elements for creating this new retrieval/treatment capacity as described previously. The top three levels of the WBS depict the elements for standard construction projects.

The WBS Dictionary (refer to Appendix C) lists and defines the WBS elements. The Dictionary includes anticipated identification and change reporting numbers, along with an element task description. As activities proceed, the Dictionary will be updated to reflect current information.

4.2 PROJECT SCHEDULE

This project schedule was developed for the waste disposition option described in Chapter 3.0, which includes acquisition of retrieval systems, a CH treatment/processing facility, and a RH treatment/processing facility.

The project summary schedule is depicted in Table 4-1 and provides major milestones and decision points for the facility acquisition. A more detailed schedule is shown in Figure 4-2. The project schedule is shown in terms of duration rather than dates to allow flexibility in Tri-Party Agreement change request negotiations without impacting the PMP. Roman numerals are used to indicate the age in the life of the project.

The functional design will be completed in April of FY II, following issuance of the PMP and performance of the three engineering studies (refer to Chapter 3.0, Section 3.2 for descriptions). The engineering studies will consist of waste characterization, a treatment technology survey, and waste acceptance criteria requirements for WIPP. Conceptual design will begin in May FY II and will conclude with funding approval in February FY III. Definitive design will be completed between October FY IV and April FY VI and will include equipment specifications. Construction/startup includes procurement and installation, as well as facility construction, and concludes with complete startup of the facilities.

The critical path for the schedule, as shown in Figure 4-2, is depicted as a solid line. The engineering studies and FDC for this PMP present no problems as long as funding and approval by Tri-Party Agreement participants occur as needed. FDC approval in a timely manner will be crucial to allow start of conceptual design and approval of funding through the line item process. Definitive design will require review and concurrence such that construction could proceed in a timely manner to support startup as scheduled.

4.3 PROJECT COST AND FUNDING PROFILE FOR NEW TREATMENT CAPACITY

The cost estimate was developed for the waste disposition option described in Chapter 3.0, Section 3.4.7. The cost estimate was developed based on the parametric technique and using information available from other projects similar to the current project scope. In the absence of a firm technical baseline required for development of project cost, budgetary estimates have been developed. Using the unit operations shown in Chapter 3.0, Figures 3-7 and 3-8, assumptions were made regarding facility and equipment needs for the purpose of estimating cost. Retrieval costs were developed based on use of excavating and material handling equipment to uncover and remove boxes. No enclosure was assumed based on lessons learned from other DOE sites (refer to Chapter 8.0, Section 8.1). The cost estimate reflects an assumption of new, standalone facilities, including separate support facilities, administrative office space, and all required utility connections. The cost estimate was derived for a facility design basis to treat stored and forecast waste over 20 years using one shift operation. The cost estimate also reflects acquisition, in one phase, of facilities complete with all treatment capabilities required to process all waste streams addressed by this PMP. Completion of the conceptual phase of the project might indicate that it would be advantageous to acquire treatment capabilities in phases, which could alter the funding profile.

Treatment technologies were selected based on available waste data and projected treatment requirements as detailed in Appendix D, Tables D-1 and D-2. The assumptions of facility location design basis and treatment technology selection were made only for the purpose of estimating cost. The actual locations of the facilities basis of design as well as equipment and technology selection will be made during the conceptual design phase of the project.

The cost details are found in Appendix D. Figures shown in Appendix D are based on year 2000 dollars. Contingency guidance for an estimate at this phase ranges from 20 to 30 percent, and under special conditions, up to 50 percent. The contingency levels used for this project ranged from 15 to 35 percent, depending on the WBS element evaluated and on the assumptions used.

Table 4-2 shows project support engineering and management, as well as capital costs for FY I through FY VIII for retrieval and CH and RH treatment/processing facilities. Project support costs include project integration; engineering studies; FDC preparation; conceptual design; environmental, safety, and QA support; and operational readiness review and startup activities. Capital costs include the engineering, procurement, and construction costs of approximately $30M spread from FY V through FY VIII.

Costs for FY I though the first half of FY III were based on well defined tasks such as project support and capital costs for activities with much higher uncertainty at this early stage in the project. As such, costs for FY IV through FY VIII should be considered a rough-order-of-magnitude estimate for the purpose of budget planning. As the conceptual design is developed and more detailed information becomes available, the project cost estimate will be revised and will be based on a firm technical baseline.

Table 4-1. M-91-03 Summary Schedule.

Project activity	Start	Finish
Project management plan	July 1999	June 2000
Engineering studies/functional design criteria	October FY I	April FY II
Conceptual design	May FY II	May FY III
Definitive design	March FY V	April FY VI
Construction/startup	May FY VI	July FY VIII

Table 4-2. Total Project Cost by Fiscal Year ($K).

FY	CH		RH		Retrieval	Total
	Project support	Capital	Project support	Capital	Capital	
I	$810	0	$670	0	0	$1,480
II	$890	0	$1,320	0	0	$2,210
III	$770	0	$1,520	0	$80	$2,370
IV	$470	0	$780	0	$700	$1,950
V	$490	$760	$860	$2,080	0	$4,190
VI	$490	$3,130	$900	$6,800	0	$11,320
VII	$490	$5,030	$900	$8,120	0	$14,540
VIII	$1,340	$1,210	$2,470	$1,720	$780	$7,520
Project total	$15,880		$28,140		$780	$44,800

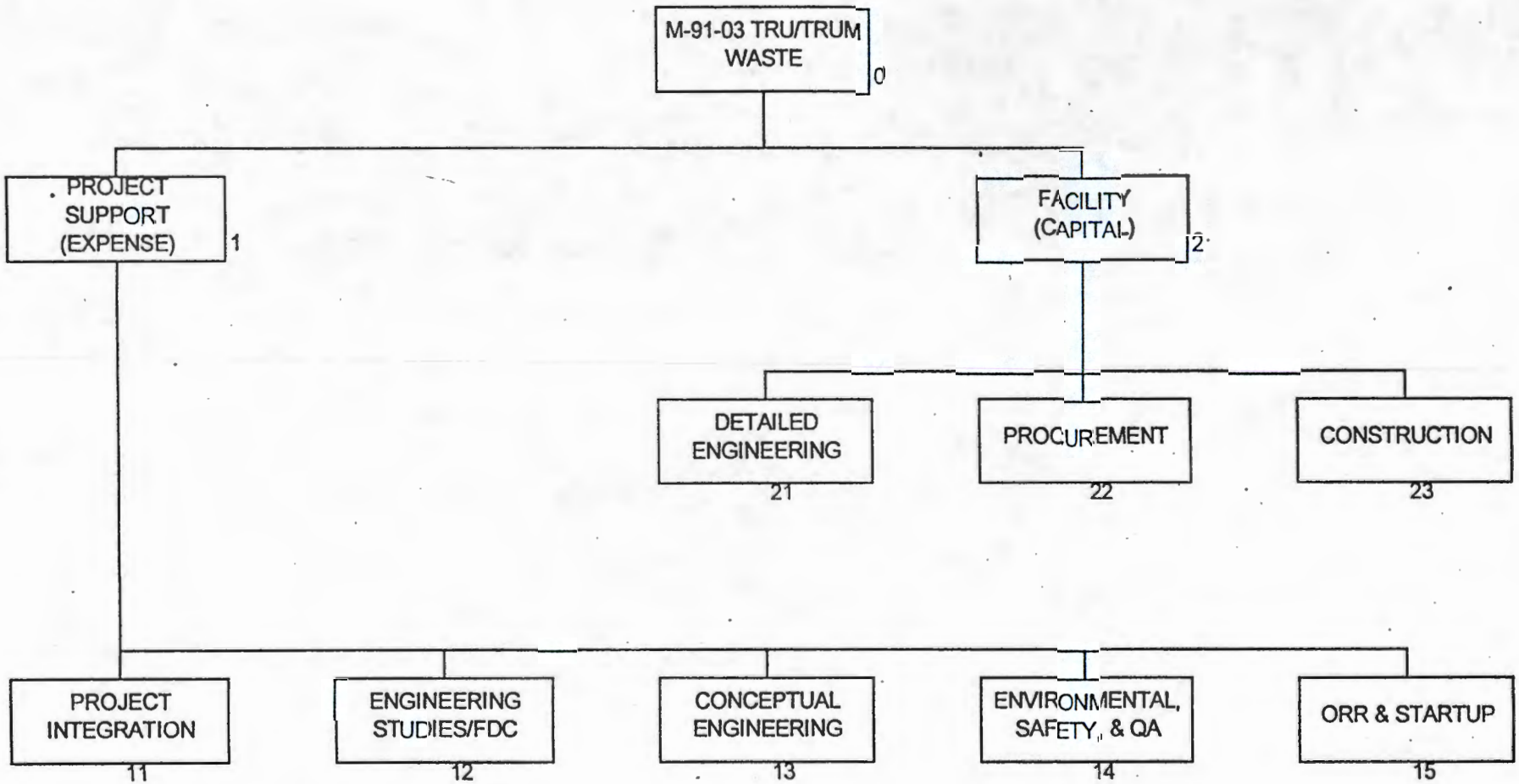

FDC = functional design criteria.
ORR = operational readiness review.
QA = quality assurance.
Note: Numbers refer to work breakdown structure element code. Refer to Appendix C.

Figure 4-1. Summary Work Breakdown Structure.

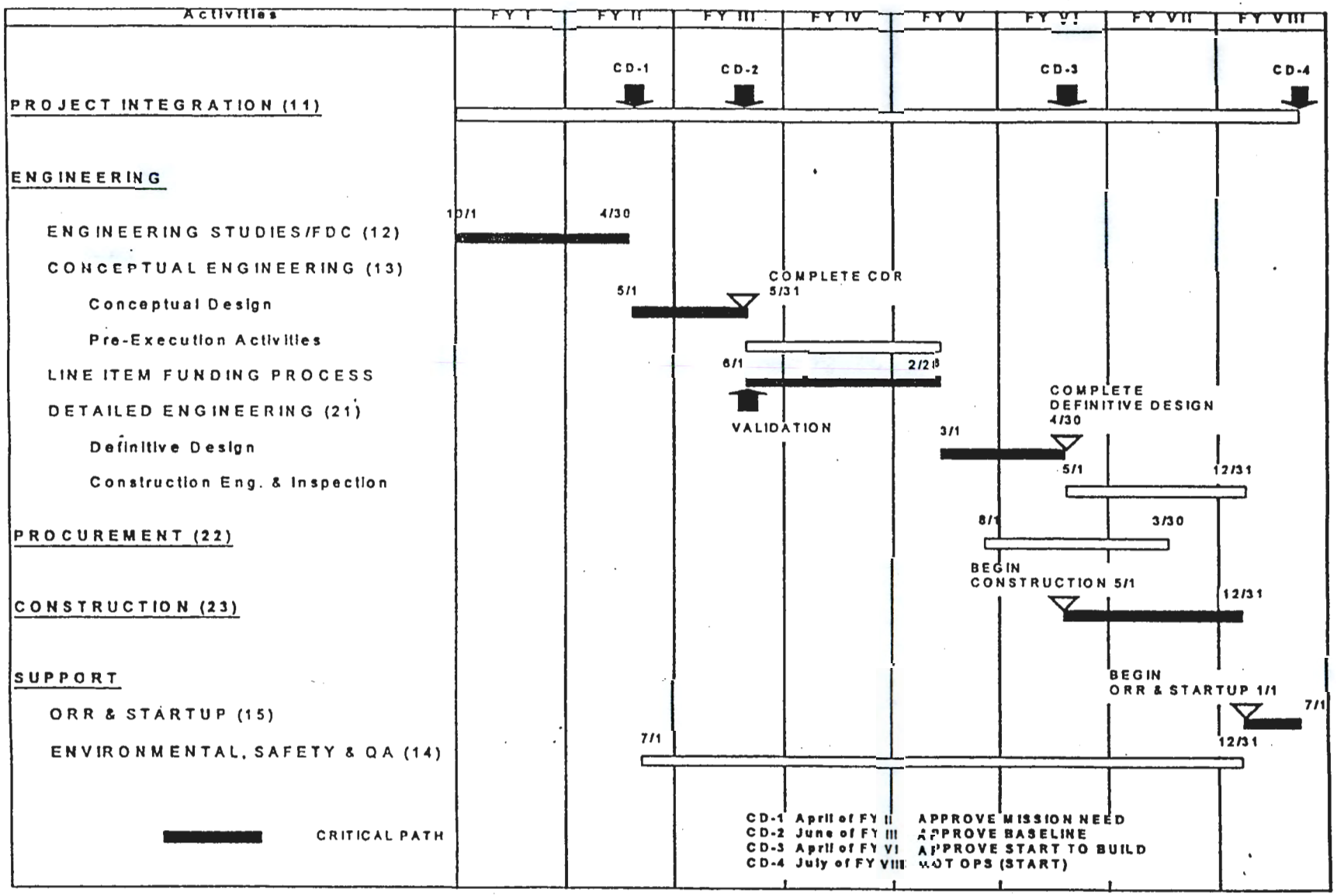

Figure 4-2. Project Summary Schedule.

5.0 CONSTRAINTS

This chapter provides a discussion of known project constraints as described in the following sections.

5.1 AGREEMENT MILESTONES

The number, description, and due dates of Tri-Party Agreement milestones associated with retrieval and treatment/processing of CH and RH TRU/TRUM waste were compared to the M-91-03 schedule. The comparison indicates that the date for initiation of hot operations will take place 7.5 years from project initiation, while the Tri-Party Agreement target date M-91-08-T01 allows for only 4.5 years. On account of the project schedule, the target date for M-91-08-T01 will need to be moved out 3 years. The reasons for the inability of the schedule to support meeting the Tri-Party Agreement milestone are that the current milestone schedule is optimistic and does not take into account requirements for a lengthy line item process.

5.2 WASTE VOLUMES AND TREATMENT CAPACITIES

Annual and total forecast volumes and waste volumes currently in storage on the Hanford Site (refer to Section 2.0) form the basis for the treatment alternatives and capacities (refer to Chapter 3.0) described in this PMP. There is inherent uncertainty associated with any given waste forecast because the assumptions, goals, and mission driving a waste generating program baseline could change, thereby changing the assumptions that drive the forecast volume estimates. Although uncertainties cannot be eliminated entirely, uncertainties are minimized to the extent practicable by validating the SWIFT data through a QA process that includes conducting peer reviews.

A potential impact of these uncertainties is that the facility capacities could possibly be overestimated. In this case, the facilities might need to be maintained in a standby mode. This scenario most likely would reduce the annual operational costs for a given year, but would increase treatment cost/unit volume. For example, RH facilities provide required capabilities that result in excess throughput.

In the unlikely event that the treatment capacity is underestimated, the facility would be unable to meet all of the waste processing needs based on a 40-hour per week processing schedule. In this case, the facility could be operated up to 24 hours a day to meet additional processing needs. Increasing facility operation would increase the annual cost of operation and maintenance, but could decrease the cost per unit volume. If treatment capacity severely is underestimated, additional storage space for the waste might need to be provided and/or constructed.

The waste characterization engineering study will serve to eliminate some of the waste volume uncertainty through detailed research of waste characteristics, which will be used to refine the waste volumes used in the FDC.

5.3 REGULATORY CONSTRAINTS

As discussed in Chapter 2.0, Section 2.4, the SW-EIS ultimately will govern the final disposal location of most Hanford Site CH and RH TRU/TRUM waste. The ROD is expected to be issued in calendar year 2001. As this will be the governing NEPA documentation for TRU waste disposition, this PMP is to be considered a planning document based on the best currently available information. Issuance of the

SW-EIS ROD could have an impact on the PMP, which will be taken into account during the pre-conceptual phase of the project.

The RH WIPP waste acceptance criteria is not developed at this time and therefore the treatment, characterization, and packaging standards for the RH facility are not known. Starting the RH portion of the project without this information would incur high risk to the project.

5.4 FUNDING CONSTRAINTS

The cost and resource plan, discussed in Chapter 4.0, provides the estimates to be used for budget requests for M-91-03 TRU/TRUM waste funding. The detailed costs are outlined in Appendix D.

The schedule for performance and completion of the facility acquisition activities will slip should funding not be available. Competition for funding among Tri-Party Agreement projects and the long-lead times associated with obtaining an approved budget could impact the schedule for activities. Any significant schedule delay likely would escalate the cost of performing and completing the activities. Substantial schedule delays would increase environmental risk because of the necessity to stockpile waste.

5.5 SCHEDULE CONSTRAINTS

WIPP currently is projecting a closure date of 2035 for receipt of all waste. Resources must be allocated to ensure that facilities are made available so that treatment and shipment of all Hanford Site TRU/TRUM waste to WIPP is complete by this date. It is also projected that waste generation on the Hanford Site will continue through the year 2033 and therefore the facility should be maintained in an operating state through this date. Under these conditions, treatment and shipment to WIPP of RH TRU/TRUM waste from 618-10/11 Burial Grounds and 200 West Area caissons can be accommodated if the waste is retrieved and made available for processing no later than 2030.

6.0 KEY DELIVERABLES

The following key deliverables identify major items as required by Tri-Party Agreement Action Plan, Section 11.5, for acquiring TSD facilities for CH and RH TRU/TRUM waste.

- Submit this PMP, which includes all elements as required by Tri-Party Agreement Action Plan, Section 11.5, by June 2000.
- FDC: The FDC will refine the technical basis for the facility design to accomplish the listed functions and will address the scope and design parameters to meet applicable codes and standards.
- CDR: The CDR will be used for technical baseline approval and to establish a cost and schedule baseline for the design, construction, and startup of the facilities.
- Definitive design report: The definitive design report will be used to formally document the final detailed design of the facilities.
- Bid specifications: Specifications will be prepared for construction. These documents will describe performance requirements and specifications for the required equipment.
- Start construction: Start of construction will follow Critical Decision 3, Approve Start to Build, as shown in Chapter 4.0, Figure 4-1, Project Summary Schedule.
- Startup plan: A plan will be written to describe activities and procedures required for the initial operation of facilities.

7.0 PERFORMANCE MEASUREMENT

Performance will be measured for Contractor team activities according to the principles of well known project management practices, e.g., cost/schedule control performance criteria, in which work accomplished, schedule, and budget are monitored and reported. Technical performance measurement will be accomplished by a comparison of actual achievement against the technical baseline and key deliverables. An analysis will be performed periodically of the difference between the achievement to date, the current estimate, and the technical baseline, with any new problems and risk areas identified. Contractor performance will be assessed through use of a performance incentive system. DOE will provide oversight of the project through the independent assessment office.

8.0 PROJECT CONTROL

System and technical requirements will be made consistent and traceable throughout the WBS as these requirements are developed during the engineering and planning phases of the project. The control system activities will be compatible with related project management activities.

8.1 PROJECT INTERFACE CONTROL

Project interfaces will be controlled by the interface control document (ICD) process when applicable. Roles, responsibilities, and authorities will be negotiated through the ICD process.

Interface among the M-91-03 TRU/TRUM waste activities and other onsite projects, including waste generating programs for inventory tracking and capacity configuration purposes, is essential for a successful project execution. A brief description of the interface requirements follows.

Environmental Impact Statement Project Team. The SW-EIS is being drafted and will result in a ROD that will address the M-91-03 TRU/TRUM waste. The EIS Project Team will continue to be apprised on the scope and planning for M-91-03 TRU/TRUM waste treatment options during preparation of the EIS.

Waste Generating Programs. Interface with the generating unit will be conducted through inquiries to the SWIFT database and direct contact with project managers and/or engineers to ensure that the waste volume forecast continues to support the design capacity of the TSD facilities. Generating units include Nuclear Material and Facility Projects, Deactivation and Decommissioning, and the ER program 618-10/11 project. The SWIFT database, described in Chapter 2.0, Section 2.1, is maintained by WMP via interface with waste generating units who forecast waste stream volumes and characteristics. Reports generated by the SWIFT database form the basis for forecast capacity planning for M-91-03 TRU/TRUM waste.

ORP. Interface with ORP will be conducted through inquiries to the SWIFT database and direct contact with the project managers and/or engineers. This interface will ensure that the forecast volumes of LLE continue to support the storage facility requirements and also to ensure the extracted LLE is integrated into the development of the ORP disposition plan for tank hardware.

WRAP Facility. The WRAP Facility provides the capability to verify if CH waste meets the criteria for TRU waste designation. The WRAP Facility also serves as the onsite certification and packaging facility for TRU waste shipments to WIPP. Integration between M-91-03 and WRAP Facility operations will be essential to allow proper planning for the WRAP Facility to adequately be prepared to handle the volume of waste received from M-91-03 project efforts.

WMP. WMP currently is involved in Phase I retrieval of suspect TRU waste containers located in the LLBG. The overall TRU retrieval project waste retrieval volumes, location of waste to be retrieved, and type of containers to be retrieved could impact TRU treatment/processing facility capabilities. Conversely, TRU treatment/processing facility capabilities and throughput limitations could impact the TRU retrieval project. Lessons learned from other DOE site retrieval operations (such as LANL, ORNL, and INEEL), as well as TRU waste retrieval currently in progress on the Hanford Site, will be used during retrieval system evaluation.

Carlsbad Area Office and WIPP. Integration of CAO requirements with TRU waste treatment/processing and characterization requirements defined in this PMP is essential for adequately defining facility treatment/processing capacity. The WIPP waste acceptance criteria defines type of container; physical,

nuclear, and chemical waste properties; and shipping requirements for waste acceptance at the CAO site. Requirements specified by the CAO, as defined in the WIPP waste acceptance criteria, form the basis for treatment/processing capabilities required for TRU/TRUM waste disposition. CAO will be apprised of the Hanford Site RH TRU/TRUM waste issues and challenges as these are formulating waste acceptance criteria for this waste type. Development of waste acceptance criteria for this stream will be affected by the lessons learned in implementation of the WIPP final status permit requirements for CH TRU waste forms.

8.2 REPORTING AND NOTIFICATION REQUIREMENTS

A reporting system will be implemented to provide the status relative to meeting all Tri-Party Agreement milestones associated with M-91-03 TRU/TRUM waste. The system will maintain a standardized structure to provide adequate comparisons among all facets of the activities, the established schedule, and technical objectives.

Parameters for required notification to the DOE-RL will be developed during the planning phases. Terms to be agreed upon could include the following events:

- Advance notice of anticipated schedule slips
- Baseline changes
- System efficiencies or technical improvements
- Organizational changes.

Notifications to Ecology regarding M-91 Tri-Party Agreement milestones, as described in this PMP, and associated change requests will be performed in accordance with established agreements and procedures.

9.0 CHANGE MANAGEMENT

Changes to cost, schedule, and technical baselines will be controlled via the change control process in place.

Changes to procedures, facility systems, or documentation that support the TSD of M-91-03 TRU/TRUM waste will be managed in accordance with current FH policies/procedures and reviewed and approved by the appropriate organizations (e.g., management, safety, and quality) before implementation. All approved change documentation will be maintained in accordance with FH record management guidelines.

9.1 TECHNICAL BASELINE CONTROL

The technical baseline will be defined during the engineering and construction planning phases. A formal change control system will be adhered to in accordance with DOE Orders and onsite procedures to maintain integrated change control.

9.2 SCHEDULE CHANGE CONTROL

Required schedule or Tri-Party Agreement milestone revisions are subject to Class 1 change control. The impact of said changes can be assessed readily when a logic driven Project schedule is used, as all start and completion dates for elements are integrated. This allows expedited review and approval by DOE-RL and Ecology of contractor proposed schedule changes.

9.3 DOCUMENTATION

A documentation management plan will be established to ensure that documentation is processed in accordance with activity needs and applicable federal, state, and onsite data management requirements.

Baseline Performance Analysis and Reporting provides a basis for the evaluation of execution success and measurement of progress towards technical, schedule, and cost objectives. The DOE-RL establishes performance measures for assessing subcontractor performance using key work activities that relate to the achievement of the Hanford Site cleanup mission and its continuous improvement process. A hierarchy of control points is established and tied to performance-based contracts that stress cost efficiency and productivity. Earned value methods and best business practices are used to measure performance against the integrated site baseline (ISB).

FH and DOE-RL jointly participate in the development, execution, and reporting of performance evaluation against the ISB and performance-based subcontracts. This results in awareness, understanding, and ownership of the process by all parties. FH provides DOE-RL a monthly report that communicates performance data for the current and cumulative reporting period. The report compares actual performance against planned activities in the ISB. The report includes cost and schedule trends; variance analysis; identification of issues; and planned corrective actions to ensure conformance to the technical, schedule and cost baselines.

10.0 REFERENCES

DOE, 1997, J. H. Boyd, National Spent Fuel Program memorandum to Elizabeth Sellers, DOE-RL, Spent Nuclear Fuels Division.

DOE O 435.1, *Radioactive Waste Management*, U.S. Department of Energy, Washington, D.C.

DOE Order 5820.2A, *Radioactive Waste Management, cancelled*

DOE/EIS-0113, *Final Environmental Impact Statement - Disposal of Hanford Defense High-Level, Transuranic, and Tank Wastes* (DOE 1987a)

DOE/LLW-217, *DOE Waste Treatability Group Guidance Document*

DOE/RL-99-41, *Radionuclide Air Emissions Report for the Hanford Site, Calendar Year 1998*, U.S. Department of Energy, Richland Operations Office, Richland, Washington.

DOE/WIPP-069, Rev. 7, *Contact Handled Transuranic Waste Acceptance Criteria for the Waste Isolation Pilot Plant*, October 7, 1999

Ecology, 2000, *Dangerous Waste Portion of the Hanford Facility Resource Conservation and Recovery Permit for the Treatment, Storage, and Disposal of Dangerous Waste*, Permit No. WA7890008967, Washington State Department of Ecology, modified quarterly.

FDH, 1997, FDH-9756992, Letter, C. G. Mattson to T. K. Teynor, "Acceptance of the Federal Republic of Germany Isotopic Sources of Radiation and Heat", August 7, 1997.

FDH-8803787B-R99, Letter, R. H. Gurske to S. H. Wisness, "Contract No. DE-AC06-98RL13200 - Fluor Daniel Hanford, Inc. Quarterly Release Report for July, August, and September 1999", October 22, 1999.

FRG WCS, 25AUG97, *Waste Certification Summary #C229-324-001*, August 25, 1997

HDW-EIS-ROD, *Disposal of Hanford Defense High-Level, Transuranic, and Tank Wastes, Hanford Site, Richland, Washington; Record of Decision*

HNF-EP-0918, Rev. 6, *Solid Waste Integration Forecast Technical Report*, August 31, 1999, Fluor Daniel Hanford, Richland, Washington.

HNF-2063, *Trade Study for the Processing, Treatment, and Storage of Hanford Site Solid Waste Streams That Have No Current Path Forward*, September 5, 1997, Draft

HNF-4293, *Project Management Plan for Low-Level Mixed Waste and Greater-Than-Category 3 Waste per Tri-Party Agreement M-91-10*, Revision 1, Fluor Daniel Hanford, Inc., Richland, Washington..

PNNL-12088, *Hanford Site Environmental Report for Calendar Year 1998*, Pacific Northwest National Laboratory, Richland, Washington.

WHC-EP-0225, *Contact-Handled Transuranic Waste Characterization Based on Existing Records*, February 1, 1990, Westinghouse Hanford Company, Richland, Washington.

WHC-EP-0645, *Performance Assessment for the Disposal of Low-Level Waste in the 200 West Area Burial Grounds*, August 12, 1994, Draft

WHC-SD-WM-TI-730, Rev. 0, *Performance Assessment for the Disposal of Low-Level Waste in the 200 East Area Burial Grounds*, August 15, 1996, Westinghouse Hanford Company, Richland, Washington.

WHC-SD-WM-ES-181, *Engineering Study Retrieval of Waste from Alpha Caissons*, October 4, 1991, Westinghouse Hanford Company, Richland, Washington.

WHC-SD-WM-ES-341, Rev. 0, *Solid Waste and Materials System Alternatives Study*, July 20, 1995, Westinghouse Hanford Company, Richland, Washington.

WHC-SD-WM-RPT-008, Rev. 0, *Alpha Caisson Data and Evaluation*, October 4 1991, Westinghouse Hanford Company, Richland, Washington.

WHC-SD-WM-RPT-060, Rev 2 *Solid Waste Program Technical Baseline Description*, September 27, 1996, Westinghouse Hanford Company, Richland, Washington.

APPENDIX A

TRI-PARTY AGREEMENT CHANGE CONTROL FORM

Change Number Draft M-91-00-02	Federal Facility Agreement and Consent Order Change Control Form Information is negotiation sensitive	Date June 30, 2000

Originator Helen E Bilson **Phone** (509) 376-6628

Class of Change
[ ] I – Signatories [X] II - Executive Manager [ ] III - Project Manager

Change Title
Revise M-91 milestones associated with the treatment, storage and disposal (TSD) facilities for transuranic (TRU) and transuranic mixed (TRUM) waste streams.

Description/Justification of Change
(See attached)

Impact of Change
Approval of this change request will ensure acquisition of facilities for the storage/treatment of TRU/TRUM waste. The change will ensure facilities are acquired in a cost-effective manner in accordance with a realistic project schedule.

Affected Documents

Hanford Federal Facility Agreement and Consent Order, as amended, Hanford site internal planning and budget documents (e.g., Sitewide System Engineering control documents, Project Management Plans and Multi Year Work Plans).

Hanford Site status report(s) (e.g. LDR Annual Report) to the extent TRUM is addressed.

Approvals

_____	_____	___ Approved	___ Disapproved
DOE	Date		
_____	_____	___ Approved	___ Disapproved
EPA	Date		
_____	_____	___ Approved	___ Disapproved
Ecology	Date		

This change request is based on a preliminary technical baseline described in document HNF-6287-1, Project Management Plan for TRU/TRUM per Tri-Party Agreement M-91-03 (PMP). The PMP describes the basis to process CH and RH TRU/TRUM in two separate facilities. The facility acquisition projects for CH and RH TRU/TRUM wastes will be managed as separate projects but will be coordinated.

The project schedule presented in the PMP depicts a facility acquisition project duration of 7.5 years, which includes the required Federal budget process for Line Item funding, compared to 4.5 years as presently required by the Tri-Party Agreement (TPA) milestone M-91-96-01 (M-91).

Justification for the CH facility acquisition schedule

The type and size of CH facilities described in the PMP were to a large extent influenced by the nature of the stored CH waste volume which represents approximately 65 percent of total (forecast and stored) CH waste. Much of the stored waste is suspect TRU and requires better characterization in order to properly plan facility capabilities required for processing the waste to meet the current Waste Isolation Pilot Plant (WIPP) Waste Acceptance Criteria (WAC) for CH waste. The SW-EIS ROD, expected to be issued in calendar year 2001, will address the retrievable stored TRU and will be the controlling NEPA document for the M-91 project. The proposed facility acquisition schedule also takes into account the priorities established by Hanford Integrated Priority Listing (IPL) process.

Justification for the RH facility acquisition schedule

Unlike the CH facility, the RH facility capabilities described in the PMP were based to a large extent on future generation of waste volumes. The forecast RH waste represents approximately 90 percent of total (stored and forecast) RH waste and involves significant uncertainties (refer to Appendix B of the PMP). Furthermore, the WIPP Waste Analysis Plan (WAP) for RH waste is not yet developed. This implies that, the design of the RH facility would be based on potentially shifting assumptions which would substantially increase the risk to the project should the project start before the design basis is better defined. The risks associated with implementing the project will be mitigated by postponing the RH project until the WIPP-WAP/WAC for RH waste is issued and the Hanford site RH TRU/TRUM waste generation can be more adequately defined.

Description of the milestones

The description of the milestones for the acquisition of retrieval, storage and treatment capacity for M-91 TRU/TRUM waste, as presented in the PMP, are described in the following table. The existing combined RH and CH Target Date events are split into identical Target Date events for the CH and RH facilities respectively in order to separately track the two acquisition projects for better project control. Strikeout indicates text to be deleted, shading indicates text to be added

The Target Dates established by approval of this change request are as follows:

Milestone	Description	Date
M-91-05-T01	Complete and submit large size CH TRU/TRUM retrieval and processing facility Engineering Study/Functional Design Criteria Study to Ecology. The CH TRU/TRUM engineering/functional design criteria study will cover activities/facilities not considered commercially viable ~~as documented in the approved TRU/TRUM PMP and associated Agreement change requests~~.	Existing: ~~12/31/02~~ New: 12/31/04
M-91-06-T01	Award necessary privatized contracts for processing ~~remote handled (RH) and~~ large size CH TRU/TRUM.	Existing: ~~9/30/03~~ New: 9/30/05
M-91-08-T01	Complete construction and initiate hot operations of ~~RH and~~ large size CH TRU/TRUM waste processing facility. ~~(a final acquisition schedule for this facility will be established as an interim milestone no later than December 2000) remote handled TRU/TRUM processing facility.~~	Existing: ~~6/30/05~~ New: 6/30/10
M-91-20-T01	Complete and submit RH TRU/TRUM waste retrieval and processing facility Engineering Study/Functional Design Criteria Study to Ecology.	Existing: ~~12/31/02~~ New: 4/30/06
M-91-21-T01	Complete construction and initiate hot operations of RH TRU/TRUM processing facility.	Existing: ~~6/30/05~~ New: 6/30/12

APPENDIX B

PHYSICAL WASTE DATA

Table B-1. Transuranic/Transuranic Mixed Waste Receipts Versus Forecast Volumes (cubic meters).

	1995	1996	1997	1998	1999
Receipts*	172	58	90	35	19
FY91 Forecast	317				
FY92 Forecast	545	700			
FY93 Forecast	547	678	808		
FY94 Forecast	581	709	439	423	
FY95 Forecast	262	437	259	273	516
FY96 Forecast		204	406	506	449
FY97 Forecast			536	624	668
FY98 Forecast				279	390
FY99 Forecast					49

* Represent activity receipts for the year shown by column.

FYxx Forecast rows represent waste forecast in year xx for the year shown by column.

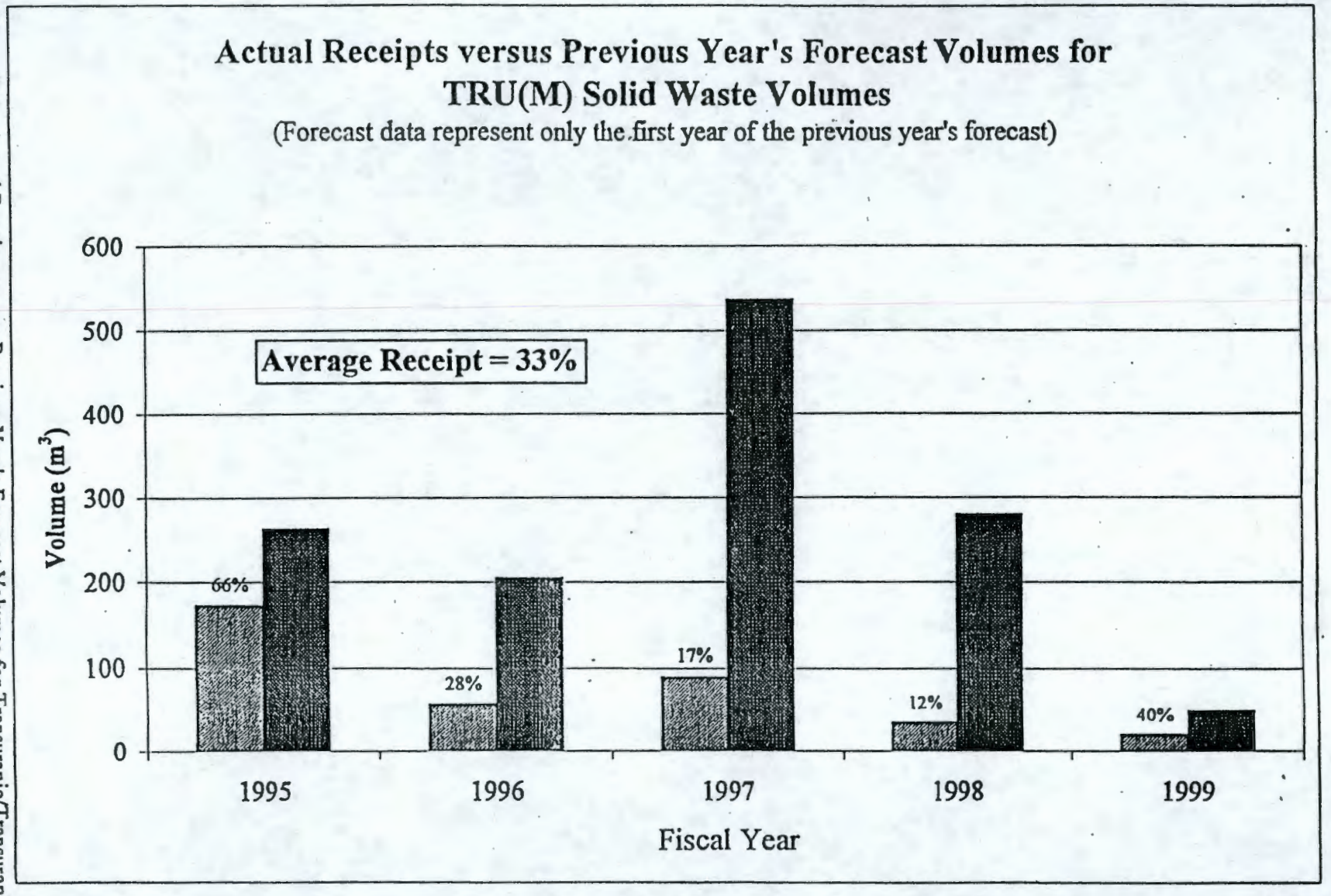

Figure B-1. Actual Receipts versus Previous Year's Forecast Volumes for Transuranic/Transuranic Mixed Solid Waste Volumes.

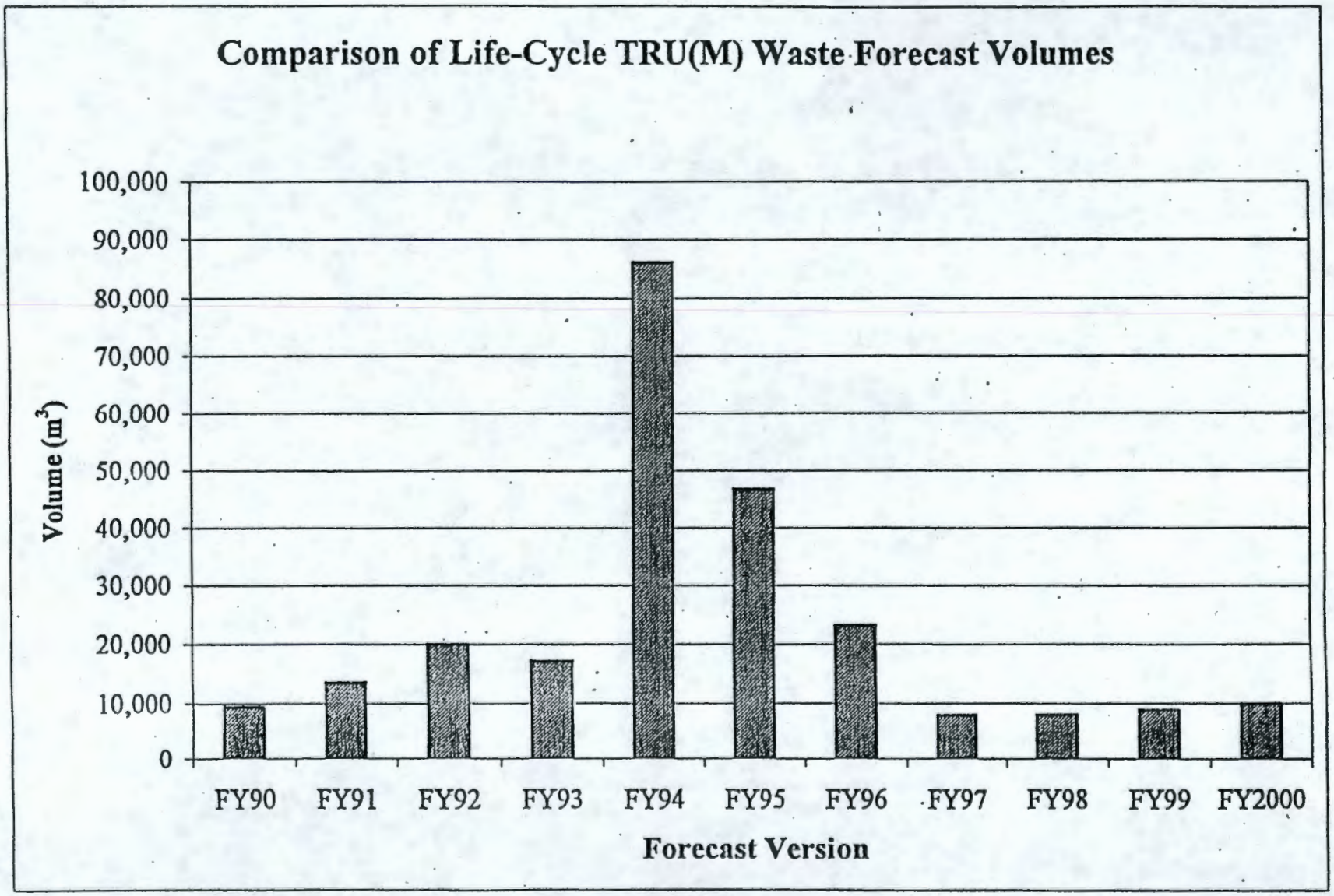

Figure B-2. Comparison of Life-Cycle Transuranic/Transuranic Mixed Waste Forecast Volumes.

This page intentionally left blank.

Forecast Contact and Remote Handled TRU/TRUM for M-91-03 PMP (DR 180, July 1999)

Waste Class	Program	Container	Physical Waste Form	Hazardous Characteristic	Total volume
CH_TRU	PNNL	208 L Drum (1A2)	Inorganic Absorbed Liq/Sludge	NA	0.3
CH_TRUM	PNNL	208 L Drum (1A2)	Inorganic Absorbed Liq/Sludge	Metals	0.2
CH_TRUM	PNNL	208 L Drum (1A2)	Inorganic Absorbed Liq/Sludge	WT-WP-WSC2	0.2
CH_TRUM	Facility Transitions	208 L Drum (1A2)	Lab Packs-Organic	Ignitable	8.6
CH_TRUM	Environmental Restoration	208 L Drum (1A2)	Organic Absorbed Liq/Sludge	Metals	0.1
CH_TRU	Facility Transitions	SWB	Debris: Inorganic	NA	3,252.2
CH_TRUM	Facility Transitions	SWB	Debris: Inorganic	Metals	36.4
CH_TRU	Facility Transitions	SWB	Debris: Organic	NA	361.4
CH_TRUM	Facility Transitions	SWB	Debris: Organic	Metals	1.5
CH_TRUM	Facility Transitions	SWB	Debris: Organic	Org+WA State	12.1
CH_TRUM	Facility Transitions	SWB	Debris: Organic	WT-WP-WSC2	16.7
CH_TRUM	Facility Transitions	SWB	Elemental Lead	Metals	12.1
CH_TRUM	Facility Transitions	SWB	Inorganic Paint Waste	WT-WP-WSC2	4.8
CH_TRUM	Facility Transitions	SWB	Inorganic Paint Waste	WT-WP-WSC2	4.8
CH_TRUM	Facility Transitions	SWB	Inorganic Particulates	Metals	36.4
CH_TRUM	Facility Transitions	SWB	Lab Packs-Organic	Ignitable	1.2
CH_TRUM	Facility Transitions	SWB	Lab Packs-Organic	Ignitable	1.2
CH_TRU	Spent Nuclear Fuel	MB-VI (5x5x9)	Debris: Metal Contaminated	NA	144.0
CH_TRUM	TWRS	LEC-16	Debris: Metal Contaminated	Metals+Org	196.7
CH_TRUM	TWRS	LEC-16	Shielding: Steel	Metals+Org	24.6
CH_TRUM	TWRS	LEC-16	Void Space	Metals+Org	245.8
CH_TRUM	TWRS	LEC-16	Organic Absorbed Liq/Sludge	Metals+Org	24.6
RH_TRUM	Environmental Restoration	208 L Drum (1A2)	Debris	NA	8.4
RH_TRUM	Environmental Restoration	208 L Drum (1A2)	Debris	NA	94.0
RH_TRU	Facility Transitions	208 L Drum (1A2)	Debris: Heterogeneous	NA	19.0
RH_TRUM	Facility Transitions	208 L Drum (1A2)	Debris: Heterogeneous	Ignitable	4.5
RH_TRUM	Facility Transitions	208 L Drum (1A2)	Debris: Heterogeneous	Metals+WA State	4.5
RH_TRU	PNNL	208 L Drum (1A2)	Debris: Heterogeneous	NA	24.0
RH_TRUM	PNNL	208 L Drum (1A2)	Debris: Heterogeneous	Metals+Org	14.0
RH_TRU	Facility Transitions	208 L Drum (1A2)	Debris: Inorganic NonMetal	NA	3.3
RH_TRU	PNNL	208 L Drum (1A2)	Inorganic Particulates	NA	2.8
RH_TRUM	PNNL	208 L Drum (1A2)	Inorganic Particulates	Metals	0.8
RH_TRUM	PNNL	208 L Drum (1A2)	Inorganic Particulates	WT-WP-WSC2	0.8
RH_TRU	PNNL	208 L Drum (1A2)	Inorganic Absorbed Liq/Sludge	NA	1.4
RH_TRUM	Facility Transitions	208 L Drum (1A2)	Inorganic Absorbed Liq/Sludge	Metals+Org	53.0
RH_TRUM	PNNL	208 L Drum (1A2)	Inorganic Absorbed Liq/Sludge	Metals	0.4

Waste Class	Program	Container	Physical Waste Form	Hazardous Characteristic	Total volume
RH_TRUM	PNNL	208 L Drum (1A2)	Inorganic Absorbed Liq/Sludge	WT-WP-WSC2	0.4
RH_TRUM	Spent Nuclear Fuel	208 L Drum (lead-lined)	Inorganic Absorbed Liq/Sludge	Metals+PCB>=50	49.0
RH_TRUM	Spent Nuclear Fuel	208 L Drum (lead-lined)	Shielding: Lead	Metals+PCB>=50	563.0
RH_TRU	PNNL	322 L Drum (1A2)	Debris: Heterogeneous	NA	1.1
RH_TRUM	PNNL	322 L Drum (1A2)	Debris: Heterogeneous	Metals+Org	0.8
RH_TRUM	Facility Transitions	SWB	Debris: Metal Contaminated	Metals	3.1
RH_TRUM	Facility Transitions	SWB	Inorganic Particulates	Metals	25.1
RH_TRUM	Facility Transitions	SWB	Soil Soil/Gravel	Metals	3.1
RH_TRU	Facility Transitions	HN-200 liner	Debris: Inorganic	NA	6.1
RH_TRU	Facility Transitions	HN-200 liner	Debris: Inorganic NonMetal	NA	6.1
RH_TRU	Facility Transitions	HN-200 liner	Debris: Metal Activated Metal	NA	6.1
RH_TRU	Facility Transitions	HN-200 liner	Debris: Metal Contaminated	NA	91.1
RH_TRU	Facility Transitions	HN-200 liner	Debris: Plastic/Rubber	NA	12.2
RH_TRUM	TWRS	LEC-11	Debris: Metal Contaminated	Metals+Org	3.7
RH_TRUM	TWRS	LEC-11	Shielding: Steel	Metals+Org	0.5
RH_TRUM	TWRS	LEC-11	Void Space	Metals+Org	4.7
RH_TRUM	TWRS	LEC-11	Organic Absorbed Liq/Sludge	Metals+Org	0.5
RH_TRUM	TWRS	LEC-13	Debris: Metal Contaminated	Metals+Org	21.4
RH_TRUM	TWRS	LEC-13	Shielding: Steel	Metals+Org	2.7
RH_TRUM	TWRS	LEC-13	Void Space	Metals+Org	26.8
RH_TRUM	TWRS	LEC-13	Organic Absorbed Liq/Sludge	Metals+Org	2.7
RH_TRUM	TWRS	LEC-14	Debris: Metal Contaminated	Metals+Org	48.2
RH_TRUM	TWRS	LEC-14	Shielding: Steel	Metals+Org	6.0
RH_TRUM	TWRS	LEC-14	Void Space	Metals+Org	60.2
RH_TRUM	TWRS	LEC-14	Organic Absorbed Liq/Sludge	Metals+Org	6.0
RH_TRUM	TWRS	LEC-16	Debris: Metal Contaminated	Metals+Org	196.7
RH_TRUM	TWRS	LEC-16	Shielding: Steel	Metals+Org	24.6
RH_TRUM	TWRS	LEC-16	Void Space	Metals+Org	245.8
RH_TRUM	TWRS	LEC-16	Organic Absorbed Liq/Sludge	Metals+Org	24.6
RH_TRU	Spent Nuclear Fuel	SPACER BOX	Debris: Metal Contaminated	NA	21.8
RH_TRU	Spent Nuclear Fuel	SPACER BOX	Organic Particulates	NA	21.8

Stored Contact and Remote Handled TRU/TRUM Waste for M-91-03 PMP (9-21-99 swit)

Group	Handling(P)	Package ID	Container	Contain. volume	Gross weight	Storage facility	Date into TSD	Alpha Ci, total	Bet/Ga dose rate	Matrix	Contamination	DW codes	PCB ppm
TRU	CH	543880	Metal box	3.540	2,743	218W4C	Dec-80		0	Solid	Radioactive		
TRU	CH	543882	Metal box	3.540	2,315	218W4C	Dec-80		0	Solid	Radioactive		
TRU	CH	543883	Metal box	3.540	2,767	218W4C	Dec-80		0	Solid	Radioactive		
TRU	CH	543884	Metal box	3.540	2,765	218W4C	Dec-80		0	Solid	Radioactive		
TRU	CH	543885	Metal box	3.540	2,702	218W4C	Dec-80		0	Solid	Radioactive		
TRU	CH	544000	Metal box	3.540	1,360	218W4C	Jun-81		1	Solid	Radioactive		
TRU	CH	544001	Metal box	3.540	1,350	218W4C	Jun-81		1	Solid	Radioactive		
TRU	CH	544002	Metal box	3.540	1,350	218W4C	Jun-81		1	Solid	Radioactive		
TRU	CH	544003	Metal box	3.540	1,356	218W4C	Jun-81		1	Solid	Radioactive		
TRU	CH	544004	Metal box	3.540	1,302	218W4C	Jun-81		1	Solid	Radioactive		
TRU	CH	544033	Metal box	3.540	715	218W4C	Sep-82		1	Solid	Radioactive		
TRU	CH	544035	Metal box	3.540	955	218W4C	Sep-82		1	Solid	Radioactive		
TRU	CH	546588	Metal box	3.540	1,320	218W4C	Sep-82		1	Solid	Radioactive		
TRU	CH	546673	Metal box	3.540	1,109	218W4C	Sep-81		1	Solid	Radioactive		
TRU	CH	546674	Metal box	3.540	1,182	218W4C	Sep-81		1	Solid	Radioactive		
TRU	CH	546675	Metal box	3.540	835	218W4C	Sep-81		1	Solid	Radioactive		
TRU	CH	748749	Metal box	6.428	3,952	218W4C	Feb-82		0	Solid	Radioactive		
TRU	CH	748750	Metal box	6.428	3,908	218W4C	Feb-82		0	Solid	Radioactive		
TRU	CH	748780	Metal box	6.428	3,665	218W4C	Mar-82		0	Solid	Radioactive		
TRU	CH	748809	Metal box	6.428	3,724	218W4C	Mar-82		0	Solid	Radioactive		
TRU	CH	748900	Metal box	6.428	2,438	218W4C	May-82		0	Solid	Radioactive		
TRU	CH	748901	Metal box	6.428	2,249	218W4C	May-82		0	Solid	Radioactive		
TRU	CH	749022	Metal box	6.428	2,370	218W4C	Sep-82		0	Solid	Radioactive		
TRU	CH	749023	Metal box	6.428	2,584	218W4C	Sep-82		0	Solid	Radioactive		
TRU	CH	749053	Metal box	6.428	2,433	218W4C	Jun-82		1	Solid	Radioactive		
TRU	CH	749054	Metal box	6.428	2,055	218W4C	Jun-82		0	Solid	Radioactive		
TRU	CH	749083	Metal box	6.428	1,816	218W4C	Jul-82		0	Solid	Radioactive		
TRU	CH	749084	Metal box	6.428	2,209	218W4C	Jul-82		0	Solid	Radioactive		
TRU	CH	855400	Metal box	4.899	2,872	218W4C	Nov-82		1	Solid	Radioactive		
TRU	CH	855401	Metal box	4.899	2,872	218W4C	Nov-82		1	Solid	Radioactive		
TRU	CH	855459	Metal box	6.456	3,175	218W4C	Nov-82		1	Solid	Radioactive		
TRU	CH	855460	Metal box	6.456	3,175	218W4C	Nov-82		0	Solid	Radioactive		
TRU	CH	855490	Metal box	5.607	1,338	218W4C	Dec-82		1	Solid	Radioactive		
TRU	CH	855491	Metal box	5.607	1,338	218W4C	Dec-82		0	Solid	Radioactive		
TRU	CH	855520	Metal box	6.230	2,737	218W4C	Dec-82		1	Solid	Radioactive		
TRU	CH	855521	Metal box	3.398	3,175	218W4C	Dec-82		1	Solid	Radioactive		
TRU	CH	855643	Metal box	5.890	2,722	218W4C	Mar-83		160	Solid	Radioactive		
TRU	CH	855644	Metal box	5.890	2,722	218W4C	Mar-83		5	Solid	Radioactive		
TRU	CH	864166	Metal box	6.428	2,282	218W4C	Mar-83		0	Solid	Radioactive		
TRU	CH	864167	Metal box	6.428	1,411	218W4C	Mar-83		0	Solid	Radioactive		
TRU	CH	864256	Metal box	6.428	2,372	218W4C	Feb-84		0	Solid	Radioactive		
TRU	CH	864257	Metal box	6.428	1,946	218W4C	Feb-84		0	Solid	Radioactive		

Group	Handling(P)	Package ID	Container	Contain. volume	Gross weight	Storage facility	Date into TSD	Alpha Ci, total	Bet/Ga dose rate	Matrix	Contamination	DW codes	PCB ppm
TRU	CH	864286	Metal box	6.428	1,498	218W4C	May-83		0	Solid	Radioactive		
TRU	CH	864287	Metal box	6.428	2,569	218W4C	May-83		0	Solid.	Radioactive		
TRU	CH	864317	Metal box	6.428	2,194	218W4C	Jun-83		0	Solid	Radioactive		
TRU	CH	864318	Metal box	6.428	1,438	218W4C	Jun-83		0	Solid	Radioactive		
TRU	CH	864347	Metal box	6.428	1,587	218W4C	Jun-83		0	Solid	Radioactive		
TRU	CH	864348	Metal box	6.428	1,647	218W4C	Jun-83		0	Solid	Radioactive		
TRU	CH	864378	Metal box	6.428	1,641	218W4C	Jun-83		0	Solid	Radioactive		
TRU	CH	864379	Metal box	6.428	1,984	218W4C	Jun-83		0	Solid	Radioactive		
TRU	CH	864409	Metal box	6.428	1,927	218W4C	Jun-83		0	Solid	Radioactive		
TRU	CH	864410	Metal box	6.428	1,704	218W4C	Jun-84		0	Solid	Radioactive		
TRU	CH	864439	Metal box	6.428	1,851	218W4C	Feb-84		0	Solid	Radioactive		
TRU	CH	864440	Metal box	6.428	1,787	218W4C	Jul-83		0	Solid	Radioactive		
TRU	CH	9400918	Metal box	2.040	645	2403WB	Mar-95		1	Solid	Radioactive		
TRU	CH	9400950	Metal box	1.938	605	2403WB	Aug-99	7.48	1	Solid	Radioactive		
TRU	CH	9400951	Metal box	1.940	643	2345Z	#N/A	12.41	1	Solid	Radioactive		
TRU	CH	9400952	Metal box	2.145	1,136	2403WB	Oct-96	0.10	1	Solid	Radioactive		
TRU	CH	9400954	Metal box	1.940	476	2403WB	Mar-96	0.31	1	Solid	Radioactive		
TRU	CH	9400955	Metal box	1.940	474	2403WB	May-96	0.00	1	Solid	Radioactive		
TRU	CH	9400956	Metal box	1.940	1,091	2403WB	Oct-96	0.66	1	Solid	Radioactive		
TRU	CH	9400957	Metal box	1.940	510	2403WB	May-96	0.00	1	Solid	Radioactive		
TRU	CH	9400958	Metal box	1.940	534	2403WB	Aug-95	0.49	1	Solid	Radioactive		
TRU	CH	9400959	Metal box	1.940	409	2403WB	Aug-95	0.00	1	Solid	Radioactive		
TRU	CH	9606685	Metal box	7.371	8,415	2403WD	Oct-96	3.20	4	Solid	Radioactive		
TRU	CH	9606686	Metal box	7.371	8,229	2403WD	Oct-96	2.56	4	Solid	Radioactive		
TRU	CH	100K-98-003700	Ion Xchge module	7.923	20,000	100KE	#N/A	5.27	11	Solid	Radioactive		
TRU	CH	100K-98-003800	Ion Xchge module	7.923	19,090	100KE	#N/A	2.68	4	Solid	Radioactive		
TRU	CH	105K-92-000045	Ion Xchge module	7.840	20,000	218W4C	Jun-93	2.18	5	Solid	Radioactive		
TRU	CH	105K-93-000049	Ion Xchge module	7.840	20,000	218W4C	Sep-93	2.56	1	Solid	Radioactive		
TRU	CH	105K-95-TRU001	Special container	2.220	5,443	MWS	Jun-95	9.47	15	Solid	Radioactive		
TRU	CH	105K-95-TRU002	Special container	2.220	5,443	MWS	Jun-95	25.90	38	Solid	Radioactive		
TRU	CH	105K-95-TRU003	Special container	1.450	3,629	MWS	Jun-95	53.70	90	Solid	Radioactive		
TRU	CH	105K-95-TRU004	Special container	1.450	3,629	MWS	Jun-95	22.13	38	Solid	Radioactive		
TRU	CH	105K-95-TRU005	Special container	1.450	3,629	MWS	Jun-95	41.22	50	Solid	Radioactive		
TRU	CH	105K-95-TRU006	Special container	1.450	3,629	MWS	Jun-95	22.13	35	Solid	Radioactive		
TRU	CH	105K-95-TRU007	Special container	1.450	3,629	MWS	May-95	16.46	30	Solid	Radioactive		
TRU	CH	105K-95-TRU008	Special container	1.450	3,629	MWS	May-95	50.55	80	Solid	Radioactive		
TRU	CH	105K-95-TRU009	Special container	2.220	5,443	MWS	Jun-95	1.05	2	Solid	Radioactive		
TRU	CH	105K-95-TRU010	Special container	2.220	5,443	MWS	Jun-95	1.26	2	Solid	Radioactive		
TRU	CH	105K-95-TRU011	Special container	1.450	3,629	MWS	May-95	1.69	1	Solid	Radioactive		
TRU	CH	105K-95-TRU012	Special container	1.450	3,629	MWS	Jun-95	14.79	1	Solid	Radioactive		
TRU	CH	105K-95-TRU013	Special container	1.450	3,629	MWS	May-95	5.06	3	Solid	Radioactive		
TRU	CH	105KE-76-0052S	Fiberboard box	0.127	13	218W3A	Oct-76		200	Solid	Radioactive		

Group	Handling(P)	Package ID	Container	Contain. volume	Gross weight	Storage facility	Date into TSD	Alpha Ci, total	Bet/Ga dose rate	Matrix	Contamination	DW codes	PCB ppm
TRU	CH	105KE-76-0055S	Wood box	1.812	813	218W3A	Oct-76		200	Solid	Radioactive		
TRU	CH	105KE-76-0056S	Wood box	1.812	813	218W3A	Oct-76		200	Solid	Radioactive		
TRU	CH	105KE-79-0003S	Ion Xchge col	2.180	3,629	218W3A	Apr-79		190	Solid	Radioactive		
TRU	CH	105N-75-0078S	Equipment	23.928	10,732	218W3A	Oct-75		200	Solid	Radioactive		
TRU	CH	144F-72-0001S	Metal box	2.690	1,207	218W4B	Feb-72		5	Solid	Radioactive		
TRU	CH	144F-72-0002S	Metal box	3.058	1,372	218W4B	Apr-72		2	Solid	Radioactive		
TRU	CH	144F-72-0003S	Metal box	3.398	1,524	218W4B	Apr-72		2	Solid	Radioactive		
TRU	CH	144F-72-0004S	Metal box	1.812	813	218W4B	Apr-72		2	Solid	Radioactive		
TRU	CH	144F-72-0005S	Metal box	1.812	813	218W4B	Apr-72		2	Solid	Radioactive		
TRU	CH	144F-72-0006S	Metal box	3.625	1,626	218W4B	Apr-72		2	Solid	Radioactive		
TRU	CH	144F-73-0001S	Metal box	6.116	2,743	218W4B	Apr-73		5	Solid	Radioactive		
TRU	CH	144F-73-0002S	Metal box	6.116	2,743	218W4B	Apr-73		5	Solid	Radioactive		
TRU	CH	202A-5113	Metal box	0.566	254	218W4B	Apr-78		20	Solid	Radioactive		
TRU	CH	202A-5114	Metal box	0.566	254	218W4B	Apr-78		20	Solid	Radioactive		
TRU	CH	202A-5115	Metal box	0.566	254	218W4B	Apr-78		20	Solid	Radioactive		
TRU	CH	202A-5116	Metal box	0.566	254	218W4B	Apr-78		20	Solid	Radioactive		
TRU	CH	202A-5117	Metal box	0.566	254	218W4B	Apr-78		20	Solid	Radioactive		
TRU	CH	202A-5119	Metal box	0.566	254	218W4B	Apr-78		20	Solid	Radioactive		
TRU	CH	202A-70-0181S	Fiberboard box	0.062	5	218E12B	Jun-70		1	Solid	Radioactive		
TRU	CH	202A-71-0366S	Metal box	0.708	318	218E12B	Apr-71		15	Solid	Radioactive		
TRU	CH	202A-71-0367S	Metal box	0.708	318	218E12B	Apr-71		15	Solid	Radioactive		
TRU	CH	202A-71-0404S	Metal box	1.019	457	218E12B	May-71		1	Solid	Radioactive		
TRU	CH	202A-71-0427S	Metal box	0.708	318	218E12B	Jun-71		1	Solid	Radioactive		
TRU	CH	202A-71-0428S	Metal box	0.708	318	218E12B	Jun-71		1	Solid	Radioactive		
TRU	CH	202A-71-0429S	Metal box	0.708	318	218E12B	Jun-71		1	Solid	Radioactive		
TRU	CH	202A-71-0430S	Metal box	0.708	318	218E12B	Jun-71		1	Solid	Radioactive		
TRU	CH	202A-71-0431S	Metal box	0.708	318	218E12B	Jun-71		1	Solid	Radioactive		
TRU	CH	202A-71-0432S	Metal box	0.708	318	218E12B	Jun-71		1	Solid	Radioactive		
TRU	CH	202A-71-0433S	Metal box	0.708	318	218E12B	Jun-71		1	Solid	Radioactive		
TRU	CH	202A-71-0434S	Metal box	0.708	318	218E12B	Jun-71		1	Solid	Radioactive		
TRU	CH	202A-71-0435S	Metal box	0.708	318	218E12B	Jun-71		1	Solid	Radioactive		
TRU	CH	202A-71-0436S	Metal box	0.708	318	218E12B	Jun-71		1	Solid	Radioactive		
TRU	CH	202A-71-0437S	Metal box	0.708	318	218E12B	Jun-71		1	Solid	Radioactive		
TRU	CH	202A-71-0438S	Metal box	0.708	318	218E12B	Jun-71		1	Solid	Radioactive		
TRU	CH	202A-71-0439S	Metal box	0.708	318	218E12B	Jun-71		1	Solid	Radioactive		
TRU	CH	202A-71-0440S	Metal box	0.708	318	218E12B	Jun-71		1	Solid	Radioactive		
TRU	CH	202A-71-0441S	Metal box	0.708	318	218E12B	Jun-71		1	Solid	Radioactive		
TRU	CH	202A-71-0442S	Metal box	0.708	318	218E12B	Jun-71		1	Solid	Radioactive		
TRU	CH	202A-71-0443S	Metal box	0.708	318	218E12B	Jun-71		1	Solid	Radioactive		
TRU	CH	202A-71-0571S	Fiberboard box	0.127	13	218E12B	Sep-71		10	Solid	Radioactive		
TRU	CH	202A-71-0572S	Fiberboard box	0.127	13	218E12B	Sep-71		10	Solid	Radioactive		
TRU	CH	202A-71-0573S	Fiberboard box	0.127	13	218E12B	Sep-71		10	Solid	Radioactive		

Group	Handling(P)	Package ID	Container	Contain. volume	Gross weight	Storage facility	Date into TSD	Alpha Ci, total	Bet/Ga dose rate	Matrix	Contamination	DW codes	PCB ppm
TRU	CH	202A-71-0574S	Fiberboard box	0.127	13	218E12B	Sep-71		10	Solid	Radioactive		
TRU	CH	202A-71-0575S	Fiberboard box	0.127	13	218E12B	Sep-71		10	Solid	Radioactive		
TRU	CH	202A-71-0576S	Fiberboard box	0.127	13	218E12B	Sep-71		10	Solid	Radioactive		
TRU	CH	202A-71-0577S	Fiberboard box	0.127	13	218E12B	Sep-71		10	Solid	Radioactive		
TRU	CH	202A-71-0578S	Fiberboard box	0.127	13	218E12B	Sep-71		10	Solid	Radioactive		
TRU	CH	202A-71-0579S	Fiberboard box	0.127	13	218E12B	Sep-71		10	Solid	Radioactive		
TRU	CH	202A-71-0580S	Fiberboard box	0.127	13	218E12B	Sep-71		10	Solid	Radioactive		
TRU	CH	202A-71-0581S	Fiberboard box	0.127	13	218E12B	Sep-71		10	Solid	Radioactive		
TRU	CH	202A-71-0582S	Fiberboard box	0.127	13	218E12B	Sep-71		10	Solid	Radioactive		
TRU	CH	202A-72-0262S	Metal box	0.708	318	218E12B	Jun-72		1	Solid	Radioactive		
TRU	CH	202A-72-0263S	Metal box	0.708	318	218E12B	Jun-72		1	Solid	Radioactive		
TRU	CH	202A-72-0264S	Metal box	0.708	318	218E12B	Jun-72		1	Solid	Radioactive		
TRU	CH	202A-72-0265S	Metal box	0.708	318	218E12B	Jun-72		1	Solid	Radioactive		
TRU	CH	202A-72-0266S	Metal box	0.708	318	218E12B	Jun-72		1	Solid	Radioactive		
TRU	CH	202A-72-0267S	Metal box	0.708	318	218E12B	Jun-72		1	Solid	Radioactive		
TRU	CH	202A-72-0268S	Metal box	0.708	318	218E12B	Jun-72		1	Solid	Radioactive		
TRU	CH	202A-72-0413S	HEPA filters	0.617	277	218E12B	Oct-72		5	Solid	Radioactive		
TRU	CH	202A-72-0414S	HEPA filters	0.617	277	218E12B	Oct-72		6	Solid	Radioactive		
TRU	CH	202A-72-0415S	HEPA filters	0.617	277	218E12B	Oct-72		2	Solid	Radioactive		
TRU	CH	202A-72-0416S	HEPA filters	0.617	277	218E12B	Oct-72		4	Solid	Radioactive		
TRU	CH	202A-72-0417S	HEPA filters	0.617	277	218E12B	Oct-72		5	Solid	Radioactive		
TRU	CH	202A-72-0418S	HEPA filters	0.617	277	218E12B	Oct-72		4	Solid	Radioactive		
TRU	CH	202A-72-0419S	HEPA filters	0.617	277	218E12B	Oct-72		2	Solid	Radioactive		
TRU	CH	202A-72-0420S	HEPA filters	0.617	277	218E12B	Oct-72		2	Solid	Radioactive		
TRU	CH	202A75003	HEPA filters	0.566	254	218W4B	Dec-75		1	Solid	Radioactive		
TRU	CH	202A75007	HEPA filters	0.566	254	218W4B	Dec-75		1	Solid	Radioactive		
TRU	CH	202A75008	HEPA filters	0.566	254	218W4B	Dec-75		1	Solid	Radioactive		
TRU	CH	202A75009	HEPA filters	0.566	254	218W4B	Dec-75		1	Solid	Radioactive		
TRU	CH	202A75011	HEPA filters	0.566	254	218W4B	Dec-75		1	Solid	Radioactive		
TRU	CH	202A75013	HEPA filters	0.566	254	218W4B	Dec-75		1	Solid	Radioactive		
TRU	CH	202A75558	HEPA filters	0.566	254	218W4B	Dec-75		1	Solid	Radioactive		
TRU	CH	202A75559	HEPA filters	0.566	254	218W4B	Dec-75		1	Solid	Radioactive		
TRU	CH	202A77-01	FRP box	36.246	7,212	218W3A	Oct-77		1	Solid	Radioactive		
TRU	CH	202A7804	FRP box	43.467	6,713	218W4C	Jan-81			Solid	Radioactive		
TRU	CH	202A7805	FRP box	43.467	8,437	218W4C	Jan-81		4	Solid	Radioactive		
TRU	CH	202A7807	FRP box	43.467	7,983	218W4C	Jan-81			Solid	Radioactive		
TRU	CH	202AL-70-0204S	Fiberboard box	0.127	13	218E12B	Jul-70		1	Solid	Radioactive		
TRU	CH	202AL-70-0205S	Fiberboard box	0.127	13	218E12B	Jul-70		1	Solid	Radioactive		
TRU	CH	202AL-70-0219S	Fiberboard box	0.127	13	218E12B	Jul-70		1	Solid	Radioactive		
TRU	CH	202AL-70-0220S	Fiberboard box	0.127	13	218E12B	Jul-70		1	Solid	Radioactive		
TRU	CH	202AL-70-0221S	Fiberboard box	0.127	13	218E12B	Jul-70		1	Solid	Radioactive		
TRU	CH	202AL-71-0026S	Equipment	0.210	68	218E12B	Jan-71		1	Solid	Radioactive		

Group	Handling(P)	Package ID	Container	Contain. volume	Gross weight	Storage facility	Date into TSD	Alpha Ci, total	Bet/Ga dose rate	Matrix	Contamination	DW codes	PCB ppm
TRU	CH	202AL-71-0561S	Fiberboard box	0.127	13	218E12B	Dec-71		1	Solid	Radioactive		
TRU	CH	202AL-71-0562S	Fiberboard box	0.127	13	218E12B	Dec-71		1	Solid	Radioactive		
TRU	CH	202AL-72-0407S	Fiberboard box	0.127	13	218E12B	Aug-72		1	Solid	Radioactive		
TRU	CH	202AL-72-0408S	Fiberboard box	0.127	13	218E12B	Aug-72		1	Solid	Radioactive		
TRU	CH	209E-78-0001S	FRP box	3.172	1,422	218W3A	Feb-78		25	Solid	Radioactive		
TRU	CH	231Z-71-0047S	Misc. scrap	0.889	356	218W4B	Jun-71		1	Solid	Radioactive		
TRU	CH	231Z-71-0048S	Equipment	0.909	408	218W4B	Jun-71		1	Solid	Radioactive		
TRU	CH	231Z-71-0053S	Glove box	25.485	11,430	218W4B	Jun-71		1	Solid	Radioactive		
TRU	CH	231Z-72-0029S	Metal box	4.757	2,136	218W4B	Mar-72		1	Solid	Radioactive		
TRU	CH	231Z-72-0035S	Metal box	0.340	152	218W4B	Apr-72		1	Solid	Radioactive		
TRU	CH	231Z-72-0036S	Metal box	0.340	152	218W4B	Apr-72		1	Solid	Radioactive		
TRU	CH	231Z-72-0037S	Metal box	0.340	152	218W4B	Apr-72		1	Solid	Radioactive		
TRU	CH	231Z-72-0040S	Metal box	0.340	152	218W4B	Apr-72		1	Solid	Radioactive		
TRU	CH	231Z-72-0041S	Metal box	0.340	152	218W4B	Apr-72		1	Solid	Radioactive		
TRU	CH	231Z-72-0044S	Metal box	0.340	152	218W4B	Apr-72		1	Solid	Radioactive		
TRU	CH	231Z-72-0045S	Metal box	0.340	152	218W4B	Apr-72		1	Solid	Radioactive		
TRU	CH	231Z-72-0048S	Metal box	0.340	152	218W4B	Apr-72		1	Solid	Radioactive		
TRU	CH	231Z-72-0084S	Metal box	0.340	152	218W4B	Jul-72		1	Solid	Radioactive		
TRU	CH	231Z-72-0085S	Metal box	0.340	152	218W4B	Jul-72		1	Solid	Radioactive		
TRU	CH	231Z-72-0086S	Metal box	0.340	152	218W4B	Jul-72		1	Solid	Radioactive		
TRU	CH	231Z-D-3	FRP box	64.591	9,072	218W4C	Nov-80		5	Solid	Radioactive		
TRU	CH	231Z-DR-1	FRP box	64.591	9,979	218W4C	Nov-80		2	Solid	Radioactive		
TRU	CH	231ZDR-10	FRP box	38.058	5,670	218W4C	Nov-80		1	Solid	Radioactive		
TRU	CH	231ZDR-11	Concrete box	48.139	37,648	218W4C	Nov-80		0	Solid	Radioactive		
TRU	CH	231ZDR-12	FRP box	43.523	7,031	218W4C	Nov-80		1	Solid	Radioactive		
TRU	CH	231ZDR-13	FRP box	43.523	7,257	218W4C	Dec-80		5	Solid	Radioactive		
TRU	CH	231ZDR-14	FRP box	43.523	7,371	218W4C	Jan-81		2	Solid	Radioactive		
TRU	CH	231ZDR-15	FRP box	64.591	7,484	218W4C	Nov-80		1	Solid	Radioactive		
TRU	CH	231ZDR-16	FRP box	32.621	5,556	218W4C	Nov-80		1	Solid	Radioactive		
TRU	CH	231ZDR-17	FRP box	64.591	10,433	218W4C	Nov-80		1	Solid	Radioactive		
TRU	CH	231ZDR-19	FRP box	64.591	10,433	218W4C	Nov-80		1	Solid	Radioactive		
TRU	CH	231Z-DR-2	FRP box	38.058	5,897	218W4C	Nov-80		1	Solid	Radioactive		
TRU	CH	231ZDR-20	FRP box	38.738	3,629	218W4C	Nov-80		1	Solid	Radioactive		
TRU	CH	231Z-DR-4	FRP box	43.523	5,897	218W4C	Jan-81		1	Solid	Radioactive		
TRU	CH	231Z-DR-5	FRP box	64.591	10,206	218W4C	Nov-80		2	Solid	Radioactive		
TRU	CH	231Z-DR-6	FRP box	64.591	8,165	218W4C	Nov-80		1	Solid	Radioactive		
TRU	CH	231Z-DR-7	FRP box	43.523	5,443	218W4C	Nov-80		1	Solid	Radioactive		
TRU	CH	231Z-DR-8	FRP box	38.058	5,897	218W4C	Nov-80		2	Solid	Radioactive		
TRU	CH	231Z-DR-9	FRP box	38.058	5,262	218W4C	Nov-80		1	Solid	Radioactive		
TRU	CH	2345Z1018	FRP box	32.593	4,423	218W4C	Dec-80		1	Solid	Radioactive		
TRU	CH	2345Z1222	FRP box	43.467	5,216	218W4C	Dec-80		1	Solid	Radioactive		
TRU	CH	2345Z6-21	FRP box	43.467	7,938	218W4C	Jan-81		1	Solid	Radioactive		

Group	Handling(P)	Package ID	Container	Contain. volume	Gross weight	Storage facility	Date into TSD	Alpha Ci, total	Bet/Ga dose rate	Matrix	Contamination	DW codes	PCB ppm
TRU	CH	2345Z6-26	FRP box	3.172	987	218W4C	Dec-80		1	Solid	Radioactive		
TRU	CH	2345Z-70-0495S	Concrete box	46.015	20,638	218W4B	Aug-70			Solid	Radioactive		
TRU	CH	2345Z-71-0066S	Metal box	6.796	3,048	218W3A	Jan-71		1	Solid	Radioactive		
TRU	CH	2345Z-71-0695S	Metal box	2.265	1,016	218W4B	Jun-71		1	Solid	Radioactive		
TRU	CH	2345Z-71-0714S	Wood box	22.654	10,160	218W4B	Jun-71		1	Solid	Radioactive		
TRU	CH	2345Z-71-0997S	Metal box	16.849	7,557	218W4B	Sep-71		1	Solid	Radioactive		
TRU	CH	2345Z-71-0998S	Metal box	3.398	1,524	218W4B	Sep-71		1	Solid	Radioactive		
TRU	CH	2345Z-71-0999S	Metal box	1.019	457	218W4B	Sep-71		1	Solid	Radioactive		
TRU	CH	2345Z-71-1000S	Metal box	1.019	457	218W4B	Sep-71		1	Solid	Radioactive		
TRU	CH	2345Z-71-1001S	Metal box	1.019	457	218W4B	Sep-71		1	Solid	Radioactive		
TRU	CH	2345Z-71-1071S	Metal box	11.214	5,030	218W4B	Oct-71		1	Solid	Radioactive		
TRU	CH	2345Z-71-1226S	Equipment	4.078	1,829	218W4B	Nov-71		1	Solid	Radioactive		
TRU	CH	2345Z-71-1227S	Equipment	4.078	1,829	218W4B	Nov-71		1	Solid	Radioactive		
TRU	CH	2345Z-71-1228S	Glove box	5.437	2,439	218W4B	Nov-71		1	Solid	Radioactive		
TRU	CH	2345Z-71-1229S	Glove box	5.437	2,439	218W4B	Nov-71		1	Solid	Radioactive		
TRU	CH	2345Z-72-0094S	Metal box	7.646	3,429	218W4B	Feb-72		1	Solid	Radioactive		
TRU	CH	2345Z-72-0254S	Glove box	2.265	1,016	218W4B	Mar-72		1	Solid	Radioactive		
TRU	CH	2345Z-72-0255S	Glove box	2.265	1,016	218W4B	Mar-72		1	Solid	Radioactive		
TRU	CH	2345Z-72-0256S	Glove box	2.265	1,016	218W4B	Mar-72		1	Solid	Radioactive		
TRU	CH	2345Z-72-0297S	Glove box	6.796	3,048	218W4B	Mar-72			Solid	Radioactive		
TRU	CH	2345Z-72-0406S	Metal box	7.617	3,416	218W4B	Apr-72		1	Solid	Radioactive		
TRU	CH	2345Z-72-0407S	Metal box	4.219	1,892	218W4B	Apr-72		1	Solid	Radioactive		
TRU	CH	2345Z-72-0408S	Metal box	5.578	2,502	218W4B	Apr-72		1	Solid	Radioactive		
TRU	CH	2345Z-72-0409S	Metal box	7.136	3,201	218W4B	Apr-72		1	Solid	Radioactive		
TRU	CH	2345Z-72-0707S	Metal box	9.968	4,471	218W4B	Jul-72		1	Solid	Radioactive		
TRU	CH	2345Z-73-0004S	Metal box	6.796	3,048	218W4B	May-73			Solid	Radioactive		
TRU	CH	2345Z-74-0001S	Metal box	6.796	3,048	218W4B	Apr-74		6	Solid	Radioactive		
TRU	CH	2345Z-74-0002S	Metal box	2.549	1,143	218W4B	Apr-74		1	Solid	Radioactive		
TRU	CH	2345Z-74-0003S	Metal box	6.796	3,048	218W4B	Apr-74		1	Solid	Radioactive		
TRU	CH	2345Z-74-0004S	Metal box	17.338	7,779	218W4B	Apr-74		1	Solid	Radioactive		
TRU	CH	2345Z-74-0005S	Metal box	14.498	6,504	218W4B	Apr-74			Solid	Radioactive		
TRU	CH	2345Z-74-0006S	Metal box	11.015	4,940	218W4B	Jun-74		1	Solid	Radioactive		
TRU	CH	2345Z-74-0008S	Metal box	18.406	8,255	218W3A	Aug-74		1	Solid	Radioactive		
TRU	CH	2345Z-75-0002S	Metal box	11.015	4,940	218W4B	May-75			Solid	Radioactive		
TRU	CH	2345Z8-19	FRP box	43.467	3,289	218W4C	Jan-81		1	Solid	Radioactive		
TRU	CH	2345Z9188	FRP box	43.467	4,944	218W4C	Dec-80		1	Solid	Radioactive		
TRU	CH	2345Z9-20	FRP box	43.467	5,897	218W4C	Jan-81		1	Solid	Radioactive		
TRU	CH	2350-3	Metal box	13.026	6,804	218W4C	Oct-81		1	Solid	Radioactive		
TRU	CH	2350-4	Metal box	13.026	6,804	218W4C	Oct-82		1	Solid	Radioactive		
TRU	CH	2350-5	Metal box	13.026	6,804	218W4C	Oct-81		1	Solid	Radioactive		
TRU	CH	2350-6	Metal box	13.026	6,804	218W4C	Oct-82		1	Solid	Radioactive		
TRU	CH	236Z1018A	FRP box	43.467	6,237	218W4C	Jan-81		1	Solid	Radioactive		

Group	Handling(P)	Package ID	Container	Contain. volume	Gross weight	Storage facility	Date into TSD	Alpha Ci, total	Bet/Ga dose rate	Matrix	Contamination	DW codes	PCB ppm
TRU	CH	236Z6-25	FRP box	3.172	1,356	218W4C	Dec-80		1	Solid	Radioactive		
TRU	CH	236Z9-24	FRP box	43.467	5,534	218W4C	Dec-80		1	Solid	Radioactive		
TRU	CH	241Z-101A	FRP box	43.467	6,895	218W4C	Jan-81		1	Solid	Radioactive		
TRU	CH	241Z8-23	FRP box	43.467	10,115	218W4C	Dec-80		1	Solid	Radioactive		
TRU	CH	242B-74-0002S	Metal box	0.340	227	218W4B	Apr-74		2	Solid	Radioactive		
TRU	CH	242B-74-0003S	HEPA filters	0.227	45	218W4B	Apr-74		2	Solid	Radioactive		
TRU	CH	242B-74-0004S	HEPA filters	0.227	45	218W4B	Apr-74		2	Solid	Radioactive		
TRU	CH	308-92-013	Metal box	9.607	1,378	2403WB	Aug-94	0.01	1	Solid	Radioactive		
TRU	CH	315962-02	FRP box	7.753	1,967	218W3A	Feb-81		0	Solid	Radioactive		
TRU	CH	315962-03	FRP box	9.101	1,864	218W3A	Feb-81		0	Solid	Radioactive		
TRU	CH	315962-04	FRP box	9.101	1,853	218W3A	Mar-81		0	Solid	Radioactive		
TRU	CH	315962-05	FRP box	9.101	1,886	218W3A	Feb-80		0	Solid	Radioactive		
TRU	CH	315962-06	FRP box	9.101	1,884	218W3A	Feb-81		0	Solid	Radioactive		
TRU	CH	315962-07	FRP box	9.101	1,901	218W3A	Mar-81		0	Solid	Radioactive		
TRU	CH	315962-08	FRP box	9.101	1,797	218W3A	Mar-81		0	Solid	Radioactive		
TRU	CH	315962-09	FRP box	9.101	1,836	218W3A	Apr-81		0	Solid	Radioactive		
TRU	CH	315962-10	FRP box	10.053	1,954	218W3A	Mar-81		0	Solid	Radioactive		
TRU	CH	315962-11	FRP box	10.053	1,947	218W3A	Mar-81		0	Solid	Radioactive		
TRU	CH	315962-12	FRP box	6.204	1,433	218W3A	May-81		0	Solid	Radioactive		
TRU	CH	315962-13	FRP box	6.204	1,432	218W3A	Jun-81		0	Solid	Radioactive		
TRU	CH	315962-14	FRP box	6.204	1,430	218W3A	Apr-81		0	Solid	Radioactive		
TRU	CH	315962-15	FRP box	8.416	1,808	218W3A	May-81		0	Solid	Radioactive		
TRU	CH	315962-16	FRP box	8.416	1,853	218W3A	Apr-81		0	Solid	Radioactive		
TRU	CH	315962-17	FRP box	8.416	1,761	218W3A	Mar-81		0	Solid	Radioactive		
TRU	CH	315962-18	FRP box	8.416	1,813	218W3A	Apr-81		0	Solid	Radioactive		
TRU	CH	315962-19	FRP box	8.416	1,798	218W3A	Mar-81		0	Solid	Radioactive		
TRU	CH	315962-20	FRP box	8.416	1,792	218W3A	Mar-81		0	Solid	Radioactive		
TRU	CH	315962-21	FRP box	9.905	1,947	218W3A	Mar-81		0	Solid	Radioactive		
TRU	CH	315962-22	FRP box	9.854	2,128	218W3A	Jun-81		0	Solid	Radioactive		
TRU	CH	325-70-0203S	HEPA filters	1.019	457	218W3A	Sep-70		10	Solid	Radioactive		
TRU	CH	325-70-0204S	HEPA filters	1.019	457	218W3A	Sep-70		10	Solid	Radioactive		
TRU	CH	325-70-0205S	HEPA filters	1.019	457	218W3A	Sep-70		10	Solid	Radioactive		
TRU	CH	325-70-0206S	HEPA filters	1.019	457	218W3A	Sep-70		10	Solid	Radioactive		
TRU	CH	325-71-0135S	Portable tank	1.019	457	218W3A	May-71		50	Solid	Radioactive		
TRU	CH	325-72-0045S	Glove box	3.398	1,524	218W4B	Jan-72		1	Solid	Radioactive		
TRU	CH	325-72-0046S	Glove box	3.398	1,524	218W4B	Jan-72		1	Solid	Radioactive		
TRU	CH	325-72-0813S	Misc. scrap	0.119	54	218W4B	Sep-72		1	Solid	Radioactive		
TRU	CH	325-72-0814S	Misc. scrap	0.119	54	218W4B	Sep-72		1	Solid	Radioactive		
TRU	CH	325-72-0815S	Misc. scrap	0.119	54	218W4B	Sep-72		1	Solid	Radioactive		
TRU	CH	325-72-0816S	Misc. scrap	0.119	54	218W4B	Sep-72		1	Solid	Radioactive		
TRU	CH	325-72-0817S	Misc. scrap	0.119	54	218W4B	Sep-72		1	Solid	Radioactive		
TRU	CH	325-74-0187S	HEPA filters	0.765	343	218W4B	Apr-74		100	Solid	Radioactive		

Group	Handling(P)	Package ID	Container	Contain. volume	Gross weight	Storage facility	Date into TSD	Alpha Ci, total	Bet/Ga dose rate	Matrix	Contamination	DW codes	PCB ppm
TRU	CH	325-74-0188S	HEPA filters	0.765	343	218W4B	Apr-74		100	Solid	Radioactive		
TRU	CH	325-74-0189S	HEPA filters	0.765	343	218W4B	Apr-74		100	Solid	Radioactive		
TRU	CH	325-74-0190S	HEPA filters	0.765	343	218W4B	Apr-74		100	Solid	Radioactive		
TRU	CH	325-74-0191S	Glove box	0.830	372	218W4B	Apr-74		27	Solid	Radioactive		
TRU	CH	325-74-0192S	Glove box	0.830	372	218W4B	Apr-74		27	Solid	Radioactive		
TRU	CH	325-74-0193S	Glove box	0.830	372	218W4B	Apr-74		27	Solid	Radioactive		
TRU	CH	325-74-0306S	Portable tank	0.187	84	218W4B	Jun-74		1	Solid	Radioactive		
TRU	CH	325-74-0307S	Portable tank	0.187	84	218W4B	Jun-74		1	Solid	Radioactive		
TRU	CH	325-74-0308S	Portable tank	0.187	84	218W4B	Jun-74		1	Solid	Radioactive		
TRU	CH	325-74-0309S	Portable tank	0.187	84	218W4B	Jun-74		1	Solid	Radioactive		
TRU	CH	325-74-0310S	Portable tank	0.187	84	218W4B	Jun-74		1	Solid	Radioactive		
TRU	CH	325-74-0311S	Portable tank	0.187	84	218W4B	Jun-74		1	Solid	Radioactive		
TRU	CH	325-74-0312S	Equipment	1.288	578	218W4B	Jun-74		1	Solid	Radioactive		
TRU	CH	325-74-0313S	Equipment	1.288	578	218W4B	Jun-74		1	Solid	Radioactive		
TRU	CH	325-74-0314S	Equipment	1.288	578	218W4B	Jun-74		1	Solid	Radioactive		
TRU	CH	325-74-0315S	Equipment	1.288	578	218W4B	Jun-74		1	Solid	Radioactive		
TRU	CH	325-75-0014S	Metal box	35.396	15,876	218W3A	Jan-75		2	Solid	Radioactive		
TRU	CH	325-75-0180S	Wood box	1.812	813	218W3A	Apr-75		10	Solid	Radioactive		
TRU	CH	325-75-0181S	Wood box	1.812	813	218W3A	Apr-75		10	Solid	Radioactive		
TRU	CH	325-75-0182S	Wood box	1.812	813	218W3A	Apr-75		10	Solid	Radioactive		
TRU	CH	325-75-0183S	Wood box	1.812	813	218W3A	Apr-75		10	Solid	Radioactive		
TRU	CH	325-75-0184S	Wood box	1.812	813	218W3A	Apr-75		10	Solid	Radioactive		
TRU	CH	325-78-0309S	Portable tank	15.574	3,742	218W4B	Apr-78		6	Solid	Radioactive		
TRU	CH	325-78-0310S	Misc. scrap	0.019	9	218W4B	Apr-78		6	Solid	Radioactive		
TRU	CH	325-78-0311S	Misc. scrap	0.019	9	218W4B	Apr-78		6	Solid	Radioactive		
TRU	CH	325-78-0312S	Misc. scrap	0.019	9	218W4B	Apr-78		6	Solid	Radioactive		
TRU	CH	325-78-0313S	Equipment	0.028	13	218W4B	Apr-78		6	Solid	Radioactive		
TRU	CH	325-78-0314S	Misc. scrap	0.034	15	218W4B	Apr-78		6	Solid	Radioactive		
TRU	CH	325-78-0315S	Misc. scrap	0.034	15	218W4B	Apr-78		6	Solid	Radioactive		
TRU	CH	325-78-0316S	Misc. scrap	0.034	15	218W4B	Apr-78		6	Solid	Radioactive		
TRU	CH	325-78-0317S	Misc. scrap	0.034	15	218W4B	Apr-78		6	Solid	Radioactive		
TRU	CH	325-78-0318S	Misc. scrap	0.034	15	218W4B	Apr-78		6	Solid	Radioactive		
TRU	CH	325-78-0319S	Wrap	0.255	114	218W4B	Apr-78		6	Solid	Radioactive		
TRU	CH	325-78-0699S	Wood box	4.644	1,996	218W4B	Sep-78		6	Solid	Radioactive		
TRU	CH	327C-71-0065S	Concrete box	0.453	530	218W4B	Oct-71		1	Solid	Radioactive		
TRU	CH	327C-71-0066S	Concrete box	0.453	530	218W4B	Oct-71		1	Solid	Radioactive		
TRU	CH	327C-71-0067S	Concrete box	0.453	530	218W4B	Oct-71		1	Solid	Radioactive		
TRU	CH	327C-71-0068S	Concrete box	0.453	530	218W4B	Oct-71		1	Solid	Radioactive		
TRU	CH	327C-71-0069S	Concrete box	0.453	530	218W4B	Oct-71		1	Solid	Radioactive		
TRU	CH	340-96-0013	Wood box	3.625	919	300LEF	#N/A		1	Solid	Radioactive		
TRU	CH	353612-7	Metal box	5.862	2,829	218W4C	Mar-82		3	Solid	Radioactive		
TRU	CH	353612-8	Metal box	5.862	2,789	218W4C	Mar-82		3	Solid	Radioactive		

Group	Handling(P)	Package ID	Container	Contain. volume	Gross weight	Storage facility	Date into TSD	Alpha Ci, total	Bet/Ga dose rate	Matrix	Contamination	DW codes	PCB ppm
TRU	CH	353613-13	Metal box	5.862	2,911	218W4C	Apr-82		1	Solid	Radioactive		
TRU	CH	353613-14	Metal box	5.862	3,267	218W4C	Apr-82		1	Solid	Radioactive		
TRU	CH	353614-1	Metal box	5.862	2,995	218W4C	May-82		0	Solid	Radioactive		
TRU	CH	353614-2	Metal box	5.862	3,693	218W4C	May-82		0	Solid	Radioactive		
TRU	CH	353615-1	Metal box	5.862	2,242	218W4C	Jun-82		0	Solid	Radioactive		
TRU	CH	353615-2	Metal box	5.862	2,948	218W4C	Jun-82		0	Solid	Radioactive		
TRU	CH	353616-1	Metal box	5.862	3,113	218W4C	Jun-82		0	Solid	Radioactive		
TRU	CH	353616-2	Portable tank	2.039	1,533	218W4C	Jun-82		0	Solid	Radioactive		
TRU	CH	353617-1	Metal box	5.862	3,249	218W4C	Feb-83		0	Solid	Radioactive		
TRU	CH	353617-2	Metal box	4.899	2,716	218W4C	Dec-82		0	Solid	Radioactive		
TRU	CH	353618-1	Metal box	4.899	3,323	218W4C	Sep-82		6	Solid	Radioactive		
TRU	CH	353618-2	Metal box	4.899	3,323	218W4C	Sep-82		6	Solid	Radioactive		
TRU	CH	353619-1	Metal box	4.899	2,510	218W4C	Sep-82		0	Solid	Radioactive		
TRU	CH	353619-2	Metal box	4.899	2,785	218W4C	Sep-82		0	Solid	Radioactive		
TRU	CH	3597-11-189	FRP box	6.768	1,787	218W4C	Mar-82		1	Solid	Radioactive		
TRU	CH	3597-11-190	FRP box	6.739	1,324	218W4C	Mar-82		1	Solid	Radioactive		
TRU	CH	3597-12-191	FRP box	8.608	2,165	218W4C	Apr-82		1	Solid	Radioactive		
TRU	CH	3597-13-192	FRP box	11.270	1,750	218W4C	Apr-82		1	Solid	Radioactive		
TRU	CH	3597-13-193	FRP box	11.270	1,774	218W4C	Apr-82		1	Solid	Radioactive		
TRU	CH	3597-13-194	FRP box	13.196	1,973	218W4C	Apr-82		1	Solid	Radioactive		
TRU	CH	3597-13-195	FRP box	11.695	1,903	218W4C	Apr-82		1	Solid	Radioactive		
TRU	CH	3597-14-196	FRP box	8.608	1,638	218W4C	Apr-82		1	Solid	Radioactive		
TRU	CH	3597-15-197	FRP box	8.608	1,633	218W4C	Apr-82		1	Solid	Radioactive		
TRU	CH	3597-16-198	FRP box	6.739	1,903	218W4C	Apr-82		1	Solid	Radioactive		
TRU	CH	3597-16-199	FRP box	6.739	1,919	218W4C	Apr-82		1	Solid	Radioactive		
TRU	CH	3597-18-209	FRP box	11.270	1,864	218W4C	Apr-82		1	Solid	Radioactive		
TRU	CH	3597-18-210	FRP box	11.270	1,823	218W4C	Apr-82		1	Solid	Radioactive		
TRU	CH	3597-18-211	FRP box	11.270	1,928	218W4C	Apr-82		1	Solid	Radioactive		
TRU	CH	3597-18-212	FRP box	13.196	1,928	218W4C	Apr-82		1	Solid	Radioactive		
TRU	CH	3597-19-213	FRP box	8.608	1,695	218W4C	Apr-82		1	Solid	Radioactive		
TRU	CH	3597-20-214	FRP box	8.608	1,983	218W4C	May-82		1	Solid	Radioactive		
TRU	CH	3597-21-215	FRP box	6.739	1,470	218W4C	May-82		1	Solid	Radioactive		
TRU	CH	3597-21-216	FRP box	6.739	1,451	218W4C	May-82		1	Solid	Radioactive		
TRU	CH	3597-22-217	FRP box	6.739	1,458	218W4C	Jun-82		1	Solid	Radioactive		
TRU	CH	3597-23-218	FRP box	11.270	1,774	218W4C	May-82		1	Solid	Radioactive		
TRU	CH	3597-23-219	FRP box	11.270	1,619	218W4C	May-82		1	Solid	Radioactive		
TRU	CH	3597-24-223	FRP box	11.695	1,600	218W4C	Jun-82		1	Solid	Radioactive		
TRU	CH	3597-24-224	FRP box	11.695	1,901	218W4C	Jun-82		1	Solid	Radioactive		
TRU	CH	3597-24-255	FRP box	11.695	1,861	218W4C	Jun-82		1	Solid	Radioactive		
TRU	CH	3597-24-266	FRP box	11.695	1,515	218W4C	Jun-82		1	Solid	Radioactive		
TRU	CH	3597-25-228	FRP box	11.695	1,808	218W4C	Jun-82		1	Solid	Radioactive		
TRU	CH	3597-25-277	FRP box	11.695	1,810	218W4C	Jun-82		1	Solid	Radioactive		

Group	Handling(P)	Package ID	Container	Contain. volume	Gross weight	Storage facility	Date Into TSD	Alpha Ci, total	Bet/Ga dose rate	Matrix	Contamination	DW codes	PCB ppm
TRU	CH	3597-6-100	FRP box	11.270	1,897	218W4C	Mar-83		1	Solid	Radioactive		
TRU	CH	3597-6-101	FRP box	11.270	1,964	218W4C	Mar-83		1	Solid	Radioactive		
TRU	CH	3597-6-98	FRP box	11.695	1,911	218W4C	Mar-83		1	Solid	Radioactive		
TRU	CH	3597-9-148	FRP box	11.270	1,833	218W4C	Mar-83		1	Solid	Radioactive		
TRU	CH	3597-9-149	FRP box	11.270	1,780	218W4C	Mar-83		1	Solid	Radioactive		
TRU	CH	3597-9-150	FRP box	11.695	1,960	218W4C	Mar-83		1	Solid	Radioactive		
TRU	CH	3597-9-151	FRP box	13.196	1,941	218W4C	Mar-83		1	Solid	Radioactive		
TRU	CH	3706-70-0001S	Misc. scrap	1.133	51	218W3A	Sep-70		3	Solid	Radioactive		
TRU	CH	3708-75-0001S	Metal box	4.460	2,000	218W3A	Jun-75		0	Solid	Radioactive		
TRU	CH	3928-CSB1	Metal box	6.428	1,850	218W4C	Jan-83		1	Solid	Radioactive		
TRU	CH	3928-CSB2	Metal box	6.428	1,850	218W4C	Jan-83		1	Solid	Radioactive		
TRU	CH	3928-CSB3	Metal box	6.428	1,773	218W4C	Feb-83		1	Solid	Radioactive		
TRU	CH	3928-CSB4	Metal box	6.428	2,134	218W4C	Feb-83		0	Solid	Radioactive		
TRU	CH	3950-13-1	Metal box	6.428	3,848	218W4C	Aug-82		0	Solid	Radioactive		
TRU	CH	3950-13-2	Metal box	6.428	2,275	218W4C	Sep-82		0	Solid	Radioactive		
TRU	CH	3950CSB25	Metal box	6.428	2,499	218W4C	Jan-83		0	Solid	Radioactive		
TRU	CH	3950CSB26	Metal box	6.428	1,886	218W4C	Jan-83		0	Solid	Radioactive		
TRU	CH	4266-14-1	Metal box	6.428	1,736	218W4C	Sep-83		0	Solid	Radioactive		
TRU	CH	4266-14-2	Metal box	6.428	1,736	218W4C	Sep-83		0	Solid	Radioactive		
TRU	CH	4266-15-1	Metal box	6.428	1,549	218W4C	Sep-83		0	Solid	Radioactive		
TRU	CH	4266-15-2	Metal box	6.428	1,640	218W4C	Sep-83		0	Solid	Radioactive		
TRU	CH	4266-16-1	Metal box	6.428	1,698	218W4C	Sep-83		0	Solid	Radioactive		
TRU	CH	4266-16-2	Metal box	6.428	1,698	218W4C	Sep-83		0	Solid	Radioactive		
TRU	CH	4266-17-1	Metal box	6.428	1,707	218W4C	Oct-83		0	Solid	Radioactive		
TRU	CH	4266-17-2	Metal box	6.428	1,707	218W4C	Oct-83		0	Solid	Radioactive		
TRU	CH	4266-20-1	Metal box	6.428	1,723	218W4C	Oct-83		0	Solid	Radioactive		
TRU	CH	4266-20-2	Metal box	6.428	1,723	218W4C	Oct-83		0	Solid	Radioactive		
TRU	CH	4266-22-1	Metal box	6.428	1,894	218W4C	Nov-83		0	Solid	Radioactive		
TRU	CH	4266-22-2	Metal box	6.428	1,471	218W4C	Nov-83		0	Solid	Radioactive		
TRU	CH	7503DMA01	FRP box	43.495	10,591	218W3A	Mar-75			Solid	Radioactive		
TRU	CH	7510DMA04	Metal box	11.015	4,940	218W3A	Oct-75		1	Solid	Radioactive		
TRU	CH	7510DMA05	FRP box	32.621	14,633	218W3A	Oct-75		1	Solid	Radioactive		
TRU	CH	7510DMA06	FRP box	32.621	14,633	218W3A	Oct-75		1	Solid	Radioactive		
TRU	CH	7510DMA07	FRP box	32.621	14,633	218W3A	Oct-75		1	Solid	Radioactive		
TRU	CH	7510DMA14	FRP box	54.397	24,399	218W3A	Oct-75		1	Solid	Radioactive		
TRU	CH	7510DMA15	FRP box	59.494	26,685	218W3A	Oct-75		1	Solid	Radioactive		
TRU	CH	7512DMA05	FRP box	21.521	9,652	218W3A	Dec-75			Solid	Radioactive		
TRU	CH	7512DMA08	FRP box	32.621	14,633	218W3A	Dec-75			Solid	Radioactive		
TRU	CH	7512DMA09	FRP box	32.621	14,633	218W3A	Dec-75			Solid	Radioactive		
TRU	CH	7512DMA10	FRP box	32.621	14,633	218W3A	Dec-75		-	Solid	Radioactive		
TRU	CH	7512DMA11	FRP box	32.621	14,633	218W3A	Dec-75			Solid	Radioactive		
TRU	CH	7512DMA16	FRP box	54.397	24,399	218W3A	Dec-75			Solid	Radioactive		

Group	Handling(P)	Package ID	Container	Contain. Volume	Gross weight	Storage facility	Date into TSD	Alpha Ci, total	Bet/Ga dose rate	Matrix	Contamination	DW codes	PCB ppm
TRU	CH	752DMA-01	FRP box	54.369	10,591	218W3A	Feb-75		10	Solid	Radioactive		
TRU	CH	753DMA-02	FRP box	54.369	10,591	218W3A	Mar-75			Solid	Radioactive		
TRU	CH	753DMAF01.A	FRP box	3.172	1,422	218W3A	Mar-75			Solid	Radioactive		
TRU	CH	753DMAF01.B	FRP box	32.621	8,618	218W3A	Mar-75			Solid	Radioactive		
TRU	CH	753DMAF02.A	FRP box	3.172	1,424	218W3A	Mar-75			Solid	Radioactive		
TRU	CH	753DMAF02.B	FRP box	43.495	6,441	218W3A	Mar-75			Solid	Radioactive		
TRU	CH	753DMAF03.A	FRP box	3.172	1,424	218W3A	Mar-75			Solid	Radioactive		
TRU	CH	753DMAF03.B	FRP box	59.494	10,886	218W3A	Mar-75			Solid	Radioactive		
TRU	CH	753DMAF04	FRP box	3.172	1,424	218W3A	Apr-75			Solid	Radioactive		
TRU	CH	753DMAF05	FRP box	54.397	8,732	218W3A	Mar-75			Solid	Radioactive		
TRU	CH	753DMAFS1	FRP box	5.465	2,451	218W3A	Mar-75			Solid	Radioactive		
TRU	CH	753DMAFS2	FRP box	5.465	2,472	218W3A	Mar-75			Solid	Radioactive		
TRU	CH	753DMAI01	Metal box	11.015	4,940	218W3A	Mar-75			Solid	Radioactive		
TRU	CH	755-DMA01	FRP box	38.058	17,069	218W3A	May-75		1	Solid	Radioactive		
TRU	CH	755-DMA02	FRP box	32.621	14,633	218W3A	May-75		1	Solid	Radioactive		
TRU	CH	755DMAF05	FRP box	3.172	1,422	218W3A	May-75		1	Solid	Radioactive		
TRU	CH	757DMA001	Metal box	17.302	7,761	218W3A	Jul-75			Solid	Radioactive		
TRU	CH	757DMA009	FRP box	59.494	16,783	218W3A	Jul-75			Solid	Radioactive		
TRU	CH	757DMAF06	FRP box	3.172	1,422	218W3A	Jul-75			Solid	Radioactive		
TRU	CH	757DMAF10	FRP box	54.397	24,399	218W3A	Jul-75			Solid	Radioactive		
TRU	CH	758DMAF04	FRP box	32.621	14,633	218W3A	Aug-75			Solid	Radioactive		
TRU	CH	758DMAF11	FRP box	54.397	24,399	218W3A	Aug-75			Solid	Radioactive		
TRU	CH	758DMAF12	FRP box	59.494	26,685	218W3A	Aug-75			Solid	Radioactive		
TRU	CH	758DMAF13	FRP box	59.494	26,685	218W3A	Aug-75			Solid	Radioactive		
TRU	CH	75DMA12F3	FRP box	32.621	14,633	218W3A	May-75		1	Solid	Radioactive		
TRU	CH	75DMA16F3	FRP box	43.495	19,509	218W3A	May-75		1	Solid	Radioactive		
TRU	CH	75DMA16F4	FRP box	43.495	19,509	218W3A	Jun-75		0	Solid	Radioactive		
TRU	CH	75DMA20F4	FRP box	54.397	24,399	218W3A	May-75		1	Solid	Radioactive		
TRU	CH	75DMA20F6	FRP box	59.494	26,685	218W3A	Jun-75			Solid	Radioactive		
TRU	CH	75DMA20F7	FRP box	54.397	24,399	218W3A	May-75		1	Solid	Radioactive		
TRU	CH	75DMA20F8	FRP box	54.397	24,399	218W3A	Jun-75		0	Solid	Radioactive		
TRU	CH	75DMAIS03	Metal box	11.015	4,940	218W3A	May-75		1	Solid	Radioactive		
TRU	CH	762DMA005	Metal box	11.015	6,350	218W3A	Sep-77		6	Solid	Radioactive		
TRU	CH	762DMA12F	FRP box	32.621	14,633	218W3A	Feb-76		1	Solid	Radioactive		
TRU	CH	762DMA18	FRP box	54.397	24,399	218W3A	Feb-76		1	Solid	Radioactive		
TRU	CH	762DMA19	FRP box	54.397	24,399	218W3A	Feb-76		1	Solid	Radioactive		
TRU	CH	762DMA20F	FRP box	54.397	24,399	218W3A	Feb-76		1	Solid	Radioactive		
TRU	CH	762DMA22	FRP box	54.397	24,399	218W3A	Feb-76		1	Solid	Radioactive		
TRU	CH	762DMAF21	FRP box	54.397	24,399	218W3A	Feb-76		1	Solid	Radioactive		
TRU	CH	763DMA13	FRP box	32.621	14,633	218W3A	Mar-76		1	Solid	Radioactive		
TRU	CH	763DMA20	FRP box	54.397	24,399	218W3A	Mar-76		1	Solid	Radioactive		
TRU	CH	763DMA23	FRP box	54.397	24,399	218W3A	Mar-76		1	Solid	Radioactive		

Group	Handling(P)	Package ID	Container	Contain. volume	Gross weight	Storage facility	Date into TSD	Alpha Ci, total	Bet/Ga dose rate	Matrix	Contamination	DW codes	PCB ppm
TRU	CH	764CTLF01	FRP box	32.621	14,633	218W3A	Nov-76		5	Solid	Radioactive		
TRU	CH	764DMAF14	FRP box	38.993	17,490	218W3A	Nov-76		5	Solid	Radioactive		
TRU	CH	764PPEF01.A	FRP box	35.679	16,003	218W3A	Nov-76		5	Solid	Radioactive		
TRU	CH	764PPEF01.B	FRP box	3.172	1,422	218W3A	Nov-76		5	Solid	Radioactive		
TRU	CH	764PPEF02	FRP box	3.172	1,422	218W3A	Nov-76		1	Solid	Radioactive		
TRU	CH	768DMAF16	FRP box	36.246	13,608	218W3A	Sep-77		1	Solid	Radioactive		
TRU	CH	778CTLF01	FRP box	36.246	13,608	218W3A	Sep-77		1	Solid	Radioactive		
TRU	CH	778PPEF02	FRP box	32.621	12,419	218W3A	Sep-77		1	Solid	Radioactive		
TRU	CH	84SB01	Metal box	7.136	2,250	218W4C	Nov-84		15	Solid	Radioactive		
TRU	CH	84SB02	Metal box	7.136	1,820	218W4C	Nov-84		1	Solid	Radioactive		
TRU	CH	9-76-26	Metal box	0.388	175	218W4B	Apr-78		1	Solid	Radioactive		
TRU	CH	A037B16F1	FRP box	36.246	9,979	218W3A	Aug-78		1	Solid	Radioactive		
TRU	CH	A-74-011	Metal box	0.830	372	218W4B	Mar-74			Solid	Radioactive		
TRU	CH	A-74-012	Metal box	0.830	372	218W4B	Mar-74			Solid	Radioactive		
TRU	CH	A-74-013	Metal box	0.830	372	218W4B	Mar-74			Solid	Radioactive		
TRU	CH	AML93-MH-00013	Metal box	1.900			#N/A	0.00		Solid	Radioactive		
TRU	CH	ARD-023	Metal box	3.540	783	218W4C	Jun-81		1	Solid	Radioactive		
TRU	CH	ARD-024	Metal box	3.540	720	218W4C	Jun-82		1	Solid	Radioactive		
TRU	CH	ARD-026	Metal box	3.540	720	218W4C	Jun-82		1	Solid	Radioactive		
TRU	CH	ARD-028	Metal box	3.540	720	218W4C	Jun-82		1	Solid	Radioactive		
TRU	CH	ARD-032	Metal box	3.540	772	218W4C	Jun-81		1	Solid	Radioactive		
TRU	CH	ARD305-12	Metal box	3.540	1,264	218W4C	Dec-82		0	Solid	Radioactive		
TRU	CH	B16751B23	FRP box	9.863	2,264	218W3A	Nov-81		0	Solid	Radioactive		
TRU	CH	B16751B24	FRP box	9.769	2,212	218W3A	Jan-82		0	Solid	Radioactive		
TRU	CH	BL-0108-00-ECV	Metal box	10.030	2,767		Apr-93	0.00		Solid	Radioactive		
TRU	CH	BL-0114-00-ECV	Metal box	3.600	998		May-93	0.00		Solid	Radioactive		
TRU	CH	BL-0115-00-ECV	Metal box	3.600	660		May-93	0.00		Solid	Radioactive		
TRU	CH	BL-0117-00-ECV	Metal box	3.600	750		May-93	0.00		Solid	Radioactive		
TRU	CH	BL-0118-00-ECV	Metal box	3.170	1,021		May-93	0.00		Solid	Radioactive		
TRU	CH	BL-0119-00-ECV	Metal box	3.600	1,043		May-93	0.00		Solid	Radioactive		
TRU	CH	BL-0121-00-ECV	Metal box	4.430	984		May-93	0.00		Solid	Radioactive		
TRU	CH	BL-0122-00-ECV	Metal box	10.030	2,370		May-93	0.00		Solid	Radioactive		
TRU	CH	BL-0123-00-ECV	Metal box	10.030	7,697		#N/A	0.00		Solid	Radioactive		
TRU	CH	BL-0130-00-ECV	Metal box	10.030	1,884		Apr-93	0.00		Solid	Radioactive		
TRU	CH	BL-0135-00-ECV	Metal box	10.030	2,404		Jun-93			Solid	Radioactive		
TRU	CH	BL-0136-00-ECV	Metal box	10.030	2,370		Jun-93			Solid	Radioactive		
TRU	CH	BL-0142-00-ECV	Metal box	3.170	1,032		Jun-93	0.00		Solid	Radioactive		
TRU	CH	BL-0143-00-ECV	Metal box	3.170	1,066		Jun-93	0.00		Solid	Radioactive		
TRU	CH	BL-0144-00-ECV	Metal box	10.030	2,007		May-93	0.00		Solid	Radioactive		
TRU	CH	BL-0148-00-ECV	Metal box	10.030	2,381		May-93	0.00		Solid	Radioactive		
TRU	CH	BL-0149-00-ECV	Metal box	10.030	2,388		May-93	0.00		Solid	Radioactive		
TRU	CH	BL-0152-00-ECV	Metal box	4.430	624		May-93	0.00		Solid	Radioactive		

Group	Handling(P)	Package ID	Container	Contain. volume	Gross weight	Storage facility	Date into TSD	Alpha Ci, total	Bet/Ga dose rate	Matrix	Contamination	DW codes	PCB ppm
TRU	CH	BL-0153-00-ECV	Metal box	3.625	1,002		May-93			Solid	Radioactive		
TRU	CH	BL-0155-00-ECV	Metal box	3.625	957		Jun-93			Solid	Radioactive		
TRU	CH	BN-74-020.A	Concrete box	3.625	3,774	218W4B	Jun-74		100	Solid	Radioactive		
TRU	CH	BN-74-021.A	Concrete box	7.136	7,430	218W4B	Jun-74		100	Solid	Radioactive		
TRU	CH	BN-74-022.A	Concrete box	7.136	7,430	218W4B	Jun-74		100	Solid	Radioactive		
TRU	CH	BN-75-200.B	Concrete box	0.765	1,814	218W4B	Dec-75		10	Solid	Radioactive		
TRU	CH	BN-76-203	Metal box	0.680	305	218W4B	Mar-76		1	Solid	Radioactive		
TRU	CH	BN82-026	Metal box	7.136	5,443	218W4C	Dec-82		2	Solid	Radioactive		
TRU	CH	BP-188054	Metal box	9.750	3,776	2403WC	Jul-92	12.53	1	Solid	Radioactive		
TRU	CH	BR73-1-26	Metal box	0.340	152	218W4B	Jan-73		1	Solid	Radioactive		
TRU	CH	BR73-2-26	Metal box	0.340	152	218W4B	Jan-73		1	Solid	Radioactive		
TRU	CH	BR73-3-13	Metal box	0.340	152	218W4B	Mar-73		1	Solid	Radioactive		
TRU	CH	BR73-4-13	Metal box	0.340	152	218W4B	Mar-73		1	Solid	Radioactive		
TRU	CH	BR73-5-13	Metal box	0.340	152	218W4B	Mar-73		1	Solid	Radioactive		
TRU	CH	CASTOR-GDF-006	Special container	1.270	19,230	324	#N/A	1.96	15	Solid	Radioactive		
TRU	CH	CASTOR-GSF-001	Metal cask	0.790	19,043	2420W	Sep-97	1.85	7	Solid	Radioactive		
TRU	CH	CASTOR-GSF-002	Metal cask	0.790	19,287	2420W	Sep-97	2.17	15	Solid	Radioactive		
TRU	CH	CASTOR-GSF-003	Metal cask	0.790	19,317	2420W	Sep-97	3.10	15	Solid	Radioactive		
TRU	CH	CASTOR-GSF-005	Metal cask	0.790	19,365	2420W	Sep-97	2.53	12	Solid	Radioactive		
TRU	CH	CASTOR-GSF-006	Metal cask	0.790	19,411	2420W	Sep-97	3.15	9	Solid	Radioactive		
TRU	CH	CASTOR-GSF-007	Metal cask	0.790	19,377	2420W	Oct-97	2.13	12	Solid	Radioactive		
TRU	CH	CSB-11	Metal box	6.428	2,463	218W4C	Apr-82		0	Solid	Radioactive		
TRU	CH	CSB-12	Metal box	6.428	2,264	218W4C	Apr-82		0	Solid	Radioactive		
TRU	CH	CSB-13	Metal box	6.428	2,501	218W4C	Apr-82		0	Solid	Radioactive		
TRU	CH	CSB-14	Metal box	6.428	2,400	218W4C	Apr-82		0	Solid	Radioactive		
TRU	CH	CSB-7	Metal box	6.428	3,828	218W4C	Mar-82		0	Solid	Radioactive		
TRU	CH	CSB-9	Metal box	6.428	3,932	218W4C	Apr-82		0	Solid	Radioactive		
TRU	CH	F-74-001	FRP box	3.172	1,422	218W3A	Sep-74		83	Solid	Radioactive		
TRU	CH	F-74-002	FRP box	3.172	1,422	218W3A	Sep-74		83	Solid	Radioactive		
TRU	CH	F-74-003	FRP box	3.172	1,422	218W3A	Sep-74		83	Solid	Radioactive		
TRU	CH	F-74-004	FRP box	3.172	1,422	218W3A	Sep-74		1	Solid	Radioactive		
TRU	CH	F-74-005	FRP box	3.172	1,422	218W3A	Sep-74		1	Solid	Radioactive		
TRU	CH	FRP-79-1	FRP box	43.495	8,505	218W4C	Feb-81			Solid	Radioactive		
TRU	CH	GE-74-001	Concrete box	5.324	12,247	218W3A	Apr-74		50	Solid	Radioactive		
TRU	CH	GE-74-002	Concrete box	5.324	12,247	218W3A	Apr-74		70	Solid	Radioactive		
TRU	CH	GE-74-003	Concrete box	5.324	12,247	218W3A	Apr-74		15	Solid	Radioactive		
TRU	CH	GE-74-004	Concrete box	5.324	12,247	218W3A	Apr-74		10	Solid	Radioactive		
TRU	CH	GE-74-005	Concrete box	5.324	12,247	218W3A	Apr-74		8	Solid	Radioactive		
TRU	CH	GE-74-006	Concrete box	5.324	12,247	218W3A	May-74		1	Solid	Radioactive		
TRU	CH	GE-74-007	Concrete box	5.324	12,247	218W3A	May-74		7	Solid	Radioactive		
TRU	CH	GE-74-008	Concrete box	5.324	12,247	218W3A	May-74		18	Solid	Radioactive		
TRU	CH	GE-74-009	Concrete box	5.324	12,247	218W3A	May-74		12	Solid	Radioactive		

Group	Handling(P)	Package ID	Container	Contain. volume	Gross weight	Storage facility	Date into TSD	Alpha Ci, total	Bet/Ga dose rate	Matrix	Contamination	DW codes	PCB ppm
TRU	CH	GE-74-010	Concrete box	5.324	12,247	218W3A	May-74		10	Solid	Radioactive		
TRU	CH	GE-74-011	Concrete box	5.324	12,247	218W3A	May-74		8	Solid	Radioactive		
TRU	CH	GE-74-012	Concrete box	5.324	12,247	218W3A	May-74		15	Solid	Radioactive		
TRU	CH	GE-74-013	Concrete box	5.324	12,247	218W3A	May-74		7	Solid	Radioactive		
TRU	CH	GE-74-014	Concrete box	5.324	12,247	218W3A	Jun-74		10	Solid	Radioactive		
TRU	CH	GE-74-016	Concrete box	5.324	12,247	218W3A	Jun-74		1	Solid	Radioactive		
TRU	CH	GE-74-017	Concrete box	5.324	12,247	218W3A	Jun-74		10	Solid	Radioactive		
TRU	CH	GE-74-018	Concrete box	5.324	12,247	218W3A	Jun-74		30	Solid	Radioactive		
TRU	CH	GE-74-020	Concrete box	3.426	8,165	218W3A	May-74		5	Solid	Radioactive		
TRU	CH	GE-74-021	Concrete box	3.426	8,165	218W3A	May-74		5	Solid	Radioactive		
TRU	CH	GE-74-022	Concrete box	3.426	8,165	218W3A	Jun-74		30	Solid	Radioactive		
TRU	CH	GE-74-023	Concrete box	3.426	8,165	218W3A	Jun-74			Solid	Radioactive		
TRU	CH	HEDL78-74	Concrete box	0.439	669	218W3A	Feb-78		6	Solid	Radioactive		
TRU	CH	HEDL-S/N-007	EBR II cask	0.694	2,365	218W4C	Apr-89	170.10	5	Solid	Radioactive		
TRU	CH	HEDL-S/N-008	EBR II cask	0.694	2,365	218W4C	Apr-89	163.50	3	Solid	Radioactive		
TRU	CH	HEDL-S/N-009	EBR II cask	0.694	2,365	218W4C	May-89	130.10	8	Solid	Radioactive		
TRU	CH	HEDL-S/N-010	EBR II cask	0.694	2,365	218W4C	May-89	120.50		Solid	Radioactive		
TRU	CH	HEDL-S/N-018	EBR II cask	0.694	2,365	218W4C	May-89	125.40	9	Solid	Radioactive		
TRU	CH	I-6-505	Metal box	11.015	4,940	218W4B	Nov-74		5	Solid	Radioactive		
TRU	CH	I-BOX-008	Metal box	11.015	4,940	218W4B	May-75			Solid	Radioactive		
TRU	CH	LANL-S/N-050	EBR II cask	0.694	2,365	218W4C	May-89	120.40	5	Solid	Radioactive		
TRU	CH	LANL-S/N-56	EBR II cask	0.694	2,365	218W4C	Jun-89	118.60	10	Solid	Radioactive		
TRU	CH	LANL-S/N-57	EBR II cask	0.694	2,365	218W4C	Jun-89	137.10	8	Solid	Radioactive		
TRU	CH	M-01	Metal box	3.398	1,270	218W4C	Dec-79		1	Solid	Radioactive		
TRU	CH	M-02	Metal box	3.398	941	218W4C	Dec-79		1	Solid	Radioactive		
TRU	CH	M-06	Metal box	3.398	1,111	218W4C	Dec-79		1	Solid	Radioactive		
TRU	CH	M-10	Metal box	3.398	1,229	218W4C	Dec-79		1	Solid	Radioactive		
TRU	CH	M-29	Metal box	3.398	862	218W4C	Dec-79		1	Solid	Radioactive		
TRU	CH	M-40	Metal box	3.398	975	218W4C	Dec-79		1	Solid	Radioactive		
TRU	CH	PNL186022	Metal box	3.200	1,510	218W4C	Feb-88		10	Solid	Radioactive		
TRU	CH	PNL186023	Metal box	3.200	1,722	218W4C	Feb-88		2	Solid	Radioactive		
TRU	CH	PNL186024	Metal box	3.200	1,154	218W4C	Feb-88		14	Solid	Radioactive		
TRU	CH	PNL186025	Metal box	3.200	1,938	218W4C	Feb-88		9	Solid	Radioactive		
TRU	CH	PNL186026	Metal box	3.200	1,275	218W4C	Feb-88		1	Solid	Radioactive		
TRU	CH	PNL186027	Metal box	9.599	3,114	218W4C	Feb-88		3	Solid	Radioactive		
TRU	CH	PNL-186037	Metal box	9.800	1,682	2403WC	Sep-93	1.02	1	Solid	Radioactive		
TRU	CH	PNL-186038	Metal box	9.800	1,932	2403WC	Sep-93	0.30	1	Solid	Radioactive		
TRU	CH	PNL-186039	Metal box	9.800	2,455	2403WC	Sep-93	2.95	1	Solid	Radioactive		
TRU	CH	PNL-186040	Metal box	9.800	2,114	2403WC	Sep-93	0.30	1	Solid	Radioactive		
TRU	CH	PNL-186041	Metal box	9.800	2,550	2403WC	Sep-93	0.49	1	Solid	Radioactive		
TRU	CH	PNL-186042	Metal box	9.800	2,500	2403WC	Sep-93	2.74	1	Solid	Radioactive		
TRU	CH	PNL-186043	Metal box	9.800	2,091	2403WC	Sep-93	0.10	1	Solid	Radioactive		

Group	Handling(P)	Package ID	Container	Contain. volume	Gross weight	Storage facility	Date into TSD	Alpha Ci, total	Bet/Ga dose rate	Matrix	Contamination	DW codes	PCB ppm
TRU	CH	PNL-186044	Metal box	9.800	1,818	2403WC	Sep-93	0.19	1	Solid	Radioactive		
TRU	CH	PNL-186045	Metal box	9.800	3,105	2403WC	Apr-92	12.58	3	Solid	Radioactive		
TRU	CH	PNL-LLW-9516	Wood box	4.078	1,477	PNL	#N/A		1	Solid	Radioactive		
TRU	CH	PNL-TRU-95017	Metal box	9.800	3,726	2403WB	Sep-95	1.29	25	Solid	Radioactive		
TRU	CH	PNL-TRU-95018	Metal box	9.800	3,765	2404WA	Sep-95	10.30	50	Solid	Radioactive		
TRU	CH	PNL-TRU-95019	Metal box	9.800	3,856	2403WB	Sep-95	1.51	170	Solid	Radioactive		
TRU	CH	PNL-TRU-95020	Metal box	9.800	3,856	2403WB	Sep-95	1.11	150	Solid	Radioactive		
TRU	CH	PNL-TRU-95021	Metal box	9.800	3,538	2403WB	Sep-95	1.90	60	Solid	Radioactive		
TRU	CH	PNL-TRU-95023	Metal box	9.800	5,081	2403WB	Sep-95	1.60	150	Solid	Radioactive		
TRU	CH	PNL-TRU-95024	Metal box	9.800	4,264	2403WB	Sep-95	4.08	180	Solid	Radioactive		
TRU	CH	PNL-TRU-95025	EBR II cask	0.234	2,270	218W4C	Sep-95	0.83	12	Solid	Radioactive		
TRU	CH	RHA84SB03	Metal box	7.300	1,973	218W4C	Sep-85		1	Solid	Radioactive		
TRU	CH	RHA84SB04	Metal box	7.300	1,723	218W4C	Sep-85		1	Solid	Radioactive		
TRU	CH	RHA84SB05	Metal box	7.300	3,401	218W4C	Sep-85		1	Solid	Radioactive		
TRU	CH	RH-A-97-002	Metal box	1.900	517	2403WB	Jun-97	0.30	1	Solid	Radioactive		
TRU	CH	RHZ-213-960317	Metal box	1.940	643	2345Z	#N/A	12.41		Solid	Radioactive		
TRU	CH	RHZ-85-003	Metal box	14.100	2,695	2403WB	Jun-93	21.15	1	Solid	Radioactive		
TRU	CH	RHZ-85-004	Metal box	7.000	1,616	2403WC	Jun-93	22.02	1	Solid	Radioactive		
TRU	CH	RHZ-85-005	Metal box	3.300	1,000	2403WB	Aug-94	0.81	1	Solid	Radioactive		
TRU	CH	RHZ-85-006	Metal box	14.100	2,818	2403WB	Jun-93	18.12	1	Solid	Radioactive		
TRU	CH	RHZ-85-007	Metal box	7.000	1,432	2403WC	Jun-93	15.48	0	Solid	Radioactive		
TRU	CH	RHZ-85-008	Metal box	3.300	660	2403WC	Aug-94	0.48	1	Solid	Radioactive		
TRU	CH	RHZ-85-010	Metal box	3.300	752	2403WC	Aug-94	0.56	1	Solid	Radioactive		
TRU	CH	RHZ-86-003	Metal box	3.172	1,022	2403WB	Aug-94	0.97	1	Solid	Radioactive		
TRU	CH	RHZ-86-006	Metal box	3.172	1,045	2403WB	Aug-94	1.35	1	Solid	Radioactive		
TRU	CH	RHZ-86-008	Metal box	3.172	1,034	2403WB	Aug-94	1.94	1	Solid	Radioactive		
TRU	CH	RHZ-86-009	Metal box	3.172	1,068	2403WB	Aug-94	1.61	1	Solid	Radioactive		
TRU	CH	RHZ-86-011	Metal box	9.607	2,011	2403WC	Aug-94	19.53	1	Solid	Radioactive		
TRU	CH	RHZ-86-017	Metal box	3.300	959	2403WB	Aug-94	0.00	1	Solid	Radioactive		
TRU	CH	RHZ-86-018	Metal box	9.607	2,409	2403WB	Aug-94	19.38	1	Solid	Radioactive		
TRU	CH	RHZ-86-021	Metal box	9.607	2,375	2403WB	Aug-94	23.24	1	Solid	Radioactive		
TRU	CH	RHZ-87-027	Metal box	4.200	625	2403WC	Aug-94	2.66	1	Solid	Radioactive		
TRU	CH	RHZ-87-030	Metal box	4.200	986	2403WC	Aug-94	0.97	1	Solid	Radioactive		
TRU	CH	RHZ-87-032	Metal box	9.607	2,375	2403WC	Aug-94	0.16	1	Solid	Radioactive		
TRU	CH	RHZ-87-040	Metal box	9.607	2,064	2403WC	Aug-94	0.40	1	Solid	Radioactive		
TRU	CH	RHZ-87-042	Metal box	9.600	1,932	2403WC	Jun-93	14.98	1	Solid	Radioactive		
TRU	CH	RHZ-87-043	Metal box	9.600	2,132	2403WC	Jun-93	21.79	1	Solid	Radioactive		
TRU	CH	RHZ-87-045	Metal box	9.607	2,386	2403WC	Aug-94	16.14	1	Solid	Radioactive		
TRU	CH	RHZ-87-046	Metal box	9.607	2,393	2403WC	Aug-94	1.61	1	Solid	Radioactive		
TRU	CH	RRM3296-1-1	Metal box	3.540	1,310	218W4C	Oct-80		0	Solid	Radioactive		
TRU	CH	RRM3296-2-2	Metal box	3.540	1,298	218W4C	Oct-80		0	Solid	Radioactive		
TRU	CH	RRM3296-3-3	Metal box	3.540	1,325	218W4C	Oct-80		0	Solid	Radioactive		

Group	Handling(P)	Package ID	Container	Contain. volume	Gross weight	Storage facility	Date into TSD	Alpha Ci, total	Bet/Ga dose rate	Matrix	Contamination	DW codes	PCB ppm
TRU	CH	RRM3296-5-5	Metal box	3.540	1,346	218W4C	Oct-80		0	Solid	Radioactive		
TRU	CH	RRM3926-4-4	Metal box	3.540	1,315	218W4C	Oct-80		0	Solid	Radioactive		
TRU	CH	S/N361	FRP box	11.695	1,818	218W3A	Nov-81		1	Solid	Radioactive		
TRU	CH	S/N362	FRP box	11.695	1,781	218W3A	Nov-81		1	Solid	Radioactive		
TRU	CH	S/N364	FRP box	11.695	1,823	218W3A	Feb-82		1	Solid	Radioactive		
TRU	CH	S/N377	FRP box	11.695	1,808	218W3A	Nov-81		1	Solid	Radioactive		
TRU	CH	S/N378	FRP box	11.695	1,821	218W3A	Nov-81		1	Solid	Radioactive		
TRU	CH	S-74-001	FRP box	13.592	6,096	218W3A	Sep-74		1	Solid	Radioactive		
TRU	CH	S-74-002	Portable tank	8.495	3,810	218W3A	Sep-74		1	Solid	Radioactive		
TRU	CH	SB11823	Metal box	7.501	1,255	218W4C	Jan-85		1	Solid	Radioactive		
TRU	CH	SB80101	Metal box	10.500	4,550	218W4C	Jan-85		1	Solid	Radioactive		
TRU	CH	SB81021	Metal box	5.751	4,050	218W4C	Jan-85		1	Solid	Radioactive		
TRU	CH	SB82021	Metal box	10.500	4,500	218W4C	Jan-85		1	Solid	Radioactive		
TRU	CH	SB82042	Metal box	18.499	4,185	218W4C	Feb-85		1	Solid	Radioactive		
TRU	CH	SB82092	Metal box	7.501	1,310	218W4C	Jan-85		1	Solid	Radioactive		
TRU	CH	SB83031	Metal box	7.501	1,410	218W4C	Jan-85		1	Solid	Radioactive		
TRU	CH	SB83041	Metal box	15.000	5,402	218W4C	Feb-85		1	Solid	Radioactive		
TRU	CH	SB83042	Metal box	15.000	5,402	218W4C	Feb-85		1	Solid	Radioactive		
TRU	CH	SB83043	Metal box	12.001	3,200	218W4C	Feb-85		1	Solid	Radioactive		
TRU	CH	SB83074	Metal box	7.501	2,067	218W4C	Jan-85		1	Solid	Radioactive		
TRU	CH	SB83121.A	Metal box	7.501	1,500	218W4C	Jan-85		1	Solid	Radioactive		
TRU	CH	SB83121.B	Metal box	14.272	6,350	218W4C	Mar-85		6	Solid	Radioactive		
TRU	CH	SB84031	Metal box	7.501	5,402	218W4C	Jan-85		1	Solid	Radioactive		
TRU	CH	SB84032	Metal box	7.501	2,955	218W4C	Feb-85		1	Solid	Radioactive		
TRU	CH	SB84033	Metal box	7.501	2,470	218W4C	May-85		3	Solid	Radioactive		
TRU	CH	SB84034	Metal box	7.501	1,725	218W4C	May-85		1	Solid	Radioactive		
TRU	CH	SB84041	Metal box	7.501	3,130	218W4C	Jan-85		1	Solid	Radioactive		
TRU	CH	SB84071	Metal box	7.501	1,680	218W4C	Jan-85		1	Solid	Radioactive		
TRU	CH	SB84072	Metal box	7.501	3,221	218W4C	Jan-85		1	Solid	Radioactive		
TRU	CH	SB84081	Metal box	7.501	1,455	218W4C	Jan-85		1	Solid	Radioactive		
TRU	CH	SB84082	Metal box	7.501	1,433	218W4C	Jan-85		1	Solid	Radioactive		
TRU	CH	SB84103	Metal box	7.501	3,379	218W4C	Jan-85		1	Solid	Radioactive		
TRU	CH	SB84104	Metal box	7.501	3,583	218W4C	Jan-85		1	Solid	Radioactive		
TRU	CH	SB84106	Metal box	10.500	2,994	218W4C	Jan-85		1	Solid	Radioactive		
TRU	CH	SB84112	Metal box	10.500	3,800	218W4C	Feb-85		1	Solid	Radioactive		
TRU	CH	SB84115	Metal box	10.500	3,720	218W4C	Jan-85		1	Solid	Radioactive		
TRU	CH	SB84118	Metal box	10.500	4,536	218W4C	Jan-85		1	Solid	Radioactive		
TRU	CH	SB8457	Metal box	10.500	3,971	218W4C	Jan-85		1	Solid	Radioactive		
TRU	CH	SB85011	Metal box	7.501	2,144	218W4C	May-85		1	Solid	Radioactive		
TRU	CH	SB85021	Metal box	7.501	1,644	218W4C	May-85		1	Solid	Radioactive		
TRU	CH	SB85022	Metal box	3.169	1,270	218W4C	May-85		1	Solid	Radioactive		
TRU	CH	SB85023	Metal box	3.169	1,134	218W4C	May-85		1	Solid	Radioactive		

Group	Handling(P)	Package ID	Container	Contain. volume	Gross weight	Storage facility	Date into TSD	Alpha Ci, total	Bet/Ga dose rate	Matrix	Contamination	DW codes	PCB ppm
TRU	CH	SB85024	Metal box	3.169	1,359	218W4C	May-85		1	Solid	Radioactive		
TRU	CH	SB85025	Metal box	3.169	1,565	218W4C	May-85		1	Solid	Radioactive		
TRU	CH	SB85026	Metal box	3.169	998	218W4C	May-85		1	Solid	Radioactive		
TRU	CH	SB-8503-1	Metal box	7.501	2,269	218W4C	Oct-85			Solid	Radioactive		
TRU	CH	SB-85032	Metal box	7.501	2,071	218W4C	Oct-85		1	Solid	Radioactive		
TRU	CH	SB85-06-1	Metal box	7.501	638	218W4C	Oct-85		1	Solid	Radioactive		
TRU	CH	SB85-06-2	Metal box	2.800	856	218W4C	Oct-85		1	Solid	Radioactive		
TRU	CH	SB85-08-2	Metal box	2.800	615	218W4C	Oct-85		1	Solid	Radioactive		
TRU	CH	SB-85083	Metal box	7.099	2,490	218W4C	Aug-85		1	Solid	Radioactive		
TRU	CH	SB-85084	Metal box	7.099	2,490	218W4C	Aug-85		1	Solid	Radioactive		
TRU	CH	SB9-83-05	Metal box	6.994	3,704	218W4C	Sep-83		10	Solid	Radioactive		
TRU	CH	SER35-116	Metal box	14.470	7,257	218W4C	Mar-82		1	Solid	Radioactive		
TRU	CH	SN/358	FRP box	11.695	1,735	218W3A	Mar-82		1	Solid	Radioactive		
TRU	CH	SN/360	FRP box	11.695	1,850	218W3A	Mar-82		1	Solid	Radioactive		
TRU	CH	VAL-83-0001S	FRP box	5.777	2,250	218W4C	Apr-83		1	Solid	Radioactive		
TRU	CH	WADCO-70-0001S	Wood box	17.075	9,847	212N	May-70			Solid	Radioactive		
TRU	CH	WADCO-70-0002S	Wood box	4.248	2,449	212N	May-70			Solid	Radioactive		
TRU	CH	WADCO-70-0003S	Wood box	15.150	8,736	212N	May-70			Solid	Radioactive		
TRU	CH	WADCO-70-0004S	Wood box	6.626	3,821	212N	May-70			Solid	Radioactive		
TRU	CH	WADCO-70-0005S	Wood box	3.681	2,123	212N	May-70			Solid	Radioactive		
TRU	CH	WADCO-70-0006S	Wood box	4.417	2,547	212N	May-70			Solid	Radioactive		
TRU	CH	WADCO-70-0007S	Wood box	4.248	2,449	212N	May-70			Solid	Radioactive		
TRU	CH	WADCO-70-0008S	Wood box	6.400	3,690	212N	May-70			Solid	Radioactive		
TRU	CH	WADCO-70-0009S	Wood box	14.159	8,165	212N	May-70			Solid	Radioactive		
TRU	CH	WADCO-70-0010S	Wood box	23.673	13,653	212N	May-70			Solid	Radioactive		
TRU	CH	WADCO-70-0011S	Wood box	30.866	17,799	212N	May-70			Solid	Radioactive		
TRU	CH	WADCO-70-0012S	Wood box	6.711	3,870	212N	May-70			Solid	Radioactive		
TRU	CH	WADCO-70-0013S	Wood box	21.124	12,183	212N	May-70			Solid	Radioactive		
TRU	CH	WADCO-70-0014S	Wood box	43.608	25,147	212N	May-70			Solid	Radioactive		
TRU	CH	WADCO-70-0015S	Wood box	14.668	8,459	212N	May-70			Solid	Radioactive		
TRU	CH	WARD-82-0008S	Metal box	6.428	1,288	218W4C	Sep-82		0	Solid	Radioactive		
TRU	CH	WARD-82-0009S	Metal box	6.428	1,740	218W4C	Sep-82		0	Solid	Radioactive		
TRU	CH	WH-74-076	Glove box	0.382	171	218W4B	Mar-74		50	Solid	Radioactive		
TRU	CH	WH-74-077	Glove box	0.382	171	218W4B	Mar-74		50	Solid	Radioactive		
TRU	CH	WH-74-078	Glove box	0.382	171	218W4B	Mar-74		50	Solid	Radioactive		
TRU	CH	WH-74-079	Glove box	0.382	171	218W4B	Mar-74		50	Solid	Radioactive		
TRU	CH	WH-74-392	Metal box	31.715	14,225	218W3A	Nov-74		5	Solid	Radioactive		
TRU	CH	WH-74-393	Metal box	3.540	1,588	218W3A	Nov-74		5	Solid	Radioactive		
TRU	CH	WH-76-630	Metal box	2.265	1,016	218W4B	Mar-76		5	Solid	Radioactive		
TRU	CH	WH-76-631	Metal box	5.097	2,286	218W4B	Mar-76		5	Solid	Radioactive		
TRU	CH	WH-76-696	Concrete box	0.765	796	218W4B	Mar-77		50	Solid	Radioactive		
TRU	CH	WH77-803	Concrete cask	13.082	5,869	218W4B	Oct-77		6	Solid	Radioactive		

Group	Handling(P)	Package ID	Container	Contain. volume	Gross weight	Storage facility	Date into TSD	Alpha Ci, total	Bet/Ga dose rate	Matrix	Contamination	DW codes	PCB ppm
TRU	CH	WH78-992	Concrete box	0.719	1,089	218W3A	Jan-78		80	Solid	Radioactive		
TRU	CH	WH78-993	Concrete box	0.719	1,089	218W3A	Jan-78		80	Solid	Radioactive		
TRU	CH	WH78-994	Concrete box	0.719	1,089	218W3A	Jan-78		80	Solid	Radioactive		
TRU	CH	WH78-995	Concrete box	0.719	1,089	218W3A	Jan-78		80	Solid	Radioactive		
TRU	CH	WH78-996	Concrete box	0.719	1,089	218W3A	Jan-78		80	Solid	Radioactive		
TRU	CH	WH78-997	Concrete box	0.719	1,089	218W3A	Jan-78		80	Solid	Radioactive		
TRU	CH	WH79-253	Metal box	11.497	2,495	218W4C	May-80		6	Solid	Radioactive		
TRU	CH	WH80-425	Metal box	14.328	6,804	218W4C	Apr-81		6	Solid	Radioactive		
TRU	CH	WH81-500	Metal box	7.136	2,495	218W4C	Sep-81		1	Solid	Radioactive		
TRU	CH	WH81-501	Metal box	7.136	2,495	218W4C	Sep-81		1	Solid	Radioactive		
TRU	CH	WH81-502	Metal box	7.136	2,495	218W4C	Sep-81		1	Solid	Radioactive		
TRU	CH	WH81-503	Metal box	38.115	13,199	218W4C	Aug-82		1	Solid	Radioactive		
TRU	CH	WH-82-036	Metal box	7.136	5,443	218W4C	Dec-82		1	Solid	Radioactive		
TRU	CH	WH82-058	Metal box	14.272	4,536	218W4C	Oct-82		100	Solid	Radioactive		
TRU	CH	WH-85-056	Metal box	7.065	2,042	218W4C	Sep-85		1	Solid	Radioactive		
TRU	CH	WHC77-827	Concrete box	0.765	245	218W4B	Apr-78		15	Solid	Radioactive		
TRU	CH	WHC77-828	Concrete box	0.765	245	218W4B	Apr-78		15	Solid	Radioactive		
TRU	CH	Z7211-01.B	Metal box	2.288	1,026	218W4B	Nov-72		4	Solid	Radioactive		
TRU	CH	Z7211-02.B	Metal box	3.256	1,461	218W4B	Nov-72		4	Solid	Radioactive		
TRU	CH	Z7211-03.B	Metal box	4.417	1,981	218W4B	Nov-72		4	Solid	Radioactive		
TRU	CH	Z7211-04.B	Metal box	4.417	1,981	218W4B	Nov-72		4	Solid	Radioactive		
TRU	CH	Z7212100	Metal box	3.398	1,524	218W4B	Dec-72		1	Solid	Radioactive		
TRU	CH	Z73-1-17	Metal box	5.578	2,502	218W4B	Jan-73			Solid	Radioactive		
TRU	CH	Z73-3-61	Metal box	6.796	3,048	218W4B	Mar-73		1	Solid	Radioactive		
TRU	CH	Z73-7-115	Metal box	3.398	152	218W4B	Apr-74			Solid	Radioactive		
TRU	CH	Z74-440	Metal box	9.061	4,064	218W4B	Apr-74		1	Solid	Radioactive		
TRU	CH	Z7610-210	Metal box	3.172	1,432	218W4B	Apr-78		1	Solid	Radioactive		
TRU	CH	Z76-11-1	Metal box	10.194	4,572	218W4B	Apr-78		1	Solid	Radioactive		
TRU	CH	Z76-11-2	Metal box	10.194	4,572	218W4B	Apr-78		1	Solid	Radioactive		
TRU	CH	Z76-12-1	FRP box	3.285	1,473	218W4B	Dec-76		1	Solid	Radioactive		
TRU	CH	Z76-12-2	FRP box	3.285	1,473	218W4B	Dec-76		1	Solid	Radioactive		
TRU	CH	Z-76-12-3	FRP box	3.285	1,473	218W4B	Dec-76		1	Solid	Radioactive		
TRU	CH	Z84A10982	Misc. scrap	0.210	86	218W4C	Aug-84		1	Solid	Radioactive		
TRU	CH	Z9D77-331	Metal box	6.370	544	2403WB	Jan-80	17.87	1	Solid	Radioactive		
TRU	CH	Z9D77-4-8	Metal box	6.370	544	2403WC	Jan-80	18.11	1	Solid	Radioactive		
TRU	CH	ZA7706-01	FRP box	3.172	454	218W3A	Mar-78			Solid	Radioactive		
TRU	CH	ZA7706-02	FRP box	3.172	318	218W3A	Mar-78			Solid	Radioactive		
TRU	CH	ZA7706-03	FRP box	3.172	499	218W3A	Mar-78			Solid	Radioactive		
TRU	CH	ZA7706-04	FRP box	3.172	499	218W3A	Mar-78			Solid	Radioactive		
TRU	CH	ZA7706-05	FRP box	3.172	454	218W3A	Mar-78			Solid	Radioactive		
TRU	CH	ZA7706-06	FRP box	3.172	454	218W3A	Mar-78			Solid	Radioactive		
TRU	CH	ZA7708-01	FRP box	3.172	454	218W3A	Mar-78			Solid	Radioactive		

Group	Handling(P)	Package ID	Container	Contain. volume	Gross weight	Storage facility	Date into TSD	Alpha Ci, total	Bet/Ga dose rate	Matrix	Contamination	DW codes	PCB ppm
TRU	CH	ZA7712-01	FRP box	3.172	454	218W3A	Mar-78			Solid	Radioactive		
TRU	CH	ZA7712-02	FRP box	3.172	45	218W3A	Mar-78			Solid	Radioactive		
TRU	CH	ZB7507001	Metal box	17.302	7,761	218W4B	Aug-75		5	Solid.	Radioactive		
TRU	CH	ZB754-001	Metal box	8.778	3,937	218W4B	May-75			Solid	Radioactive		
TRU	CH	ZB754-002	Metal box	17.358	7,784	218W4B	May-75			Solid	Radioactive		
TRU	CH	ZBB7812-1	FRP box	32.083	4,423	218W3A	Mar-78		5	Solid	Radioactive		
TRU	CH	ZBB78121.A	FRP box	19.680	5,443	218W3A	Mar-78		5	Solid	Radioactive		
TRU	CH	ZBB78121.B	FRP box	19.680	1,474	218W3A	Mar-78		5	Solid	Radioactive		
TRU	CH	ZBB78161.A	FRP box	21.521	9,652	218W3A	Mar-78		7	Solid	Radioactive		
TRU	CH	ZBB78161.B	FRP box	21.521	5,330	218W3A	Mar-78		10	Solid	Radioactive		
TRU	CH	ZBB78162	FRP box	21.521	9,652	218W3A	Mar-78		70	Solid	Radioactive		
TRU	CH	ZBB78163.A	FRP box	21.521	9,652	218W3A	Mar-78		0	Solid	Radioactive		
TRU	CH	ZBB78163.B	FRP box	21.521	5,443	218W3A	Mar-78		5	Solid	Radioactive		
TRU	CH	ZBB78164.A	FRP box	21.521	9,652	218W3A	Mar-78		0	Solid	Radioactive		
TRU	CH	ZBB78164.B	FRP box	21.521	4,423	218W3A	Mar-78		5	Solid	Radioactive		
TRU	CH	ZBB78165	FRP box	21.521	9,652	218W3A	Mar-78		7	Solid	Radioactive		
TRU	CH	ZBB78166	FRP box	21.521	9,652	218W3A	Mar-78		0	Solid	Radioactive		
TRU	CH	ZBB78201.A	FRP box	27.128	12,165	218W3A	Mar-78		0	Solid	Radioactive		
TRU	CH	ZBB78201.B	FRP box	27.128	6,917	218W3A	Mar-78		5	Solid	Radioactive		
TRU	CH	ZBB78202	FRP box	27.128	6,690	218W3A	Mar-78		5	Solid	Radioactive		
TRUM	CH	543939	Metal box	3.540	989	218W4C	Mar-81		2	Solid	Mixed		
TRUM	CH	543940	Metal box	3.540	1,296	218W4C	Mar-82		2	Solid.	Mixed		
TRUM	CH	543941	Metal box	3.540	1,230	218W4C	Mar-82		2	Solid	Mixed		
TRUM	CH	543942	Metal box	3.540	1,349	218W4C	Mar-82		2	Solid	Mixed		
TRUM	CH	543943	Metal box	3.540	1,359	218W4C	Mar-82		2	Solid	Mixed		
TRUM	CH	543944	Metal box	3.540	1,291	218W4C	Mar-82		2	Solid	Mixed		
TRUM	CH	544085	Metal box	3.540	1,040	218W4C	Jun-82		1	Solid	Mixed		
TRUM	CH	544086	Metal box	3.540	572	218W4C	Jun-82		1	Solid	Mixed		
TRUM	CH	9400024	Metal drum	0.208	86	2402WE	Apr-94	0.08	1	Liquid	Mixed	D019 WC02 WP01 WT02	
TRUM	CH	9400077	Metal drum	0.208	55	2402WE	Apr-94	0.03	1	Liquid	Mixed	D019 WC02 WP01 WT02	
TRUM	CH	9400917	Metal box	2.040	1,045	2402WC	Jun-94	0.89	1	Solid	Mixed		
TRUM	CH	9400919	Metal box	2.040	518	2403WC	Mar-95	1.62	1	Solid	Mixed		
TRUM	CH	9400921	Metal box	2.040	390	2403WC	Oct-94	0.32	1	Solid	Mixed		
TRUM	CH	9400974	Metal drum	0.208	64	2402WE	Apr-94	0.24	1	Liquid	Mixed	D019 WC02 WP01 WT02	
TRUM	CH	9402872	Metal drum	0.208	37	271U	#N/A			Liquid	Mixed		
TRUM	CH	9406150	Metal drum	0.114	39	324	#N/A			Liquid	Mixed	D001	
TRUM	CH	9522317	Metal drum	0.208	58	2403WB	Jun-96	0.00	1	Liquid	Mixed PCB	D004 D008 D009 D010	2-49
TRUM	CH	9601835	Metal drum	0.208	178		Dec-98	0.00	80	Liquid	Mixed	F001 F002 F003 F004 F005	
TRUM	CH	9607625	Metal drum	0.030	75		Dec-98	0.00	30	Liquid	Mixed	F001 F002 F003 F004 F005 D002 D004 D	
TRUM	CH	9608111	Metal drum	0.208	175		Dec-98	0.01	60	Liquid	Mixed	F001 F002 F003 F004 F005 D002 D004 D	
TRUM	CH	9701835	Metal drum	0.208	170		Dec-98	0.01	80	Liquid	Mixed	F001 F002 F003 F004 F005 D002 D004 D	
TRUM	CH	9701844	Metal drum	0.208	177		Dec-98	0.01	70	Liquid	Mixed	F001 F002 F003 F004 F005 D001 D002	

Group	Handling(P)	Package ID	Container	Contain. volume	Gross weight	Storage facility	Date into TSD	Alpha Ci, total	Bet/Ga dose rate	Matrix	Contamination	DW codes	PCB ppm
TRUM	CH	9703454	Metal drum	0.322	87	FS11	May-98	0.01	1	Liquid	Mixed	D001 D002 WT02	
TRUM	CH	9803990	Metal drum	0.208	44	324	#N/A	0.00	1	Liquid	Mixed	D001 D005 WP01 WT02	
TRUM	CH	105C-71-0001S	Metal box	1.812	813	218W4B	Oct-71		2	Solid	Mixed		
TRUM	CH	16538-1	EBR II cask	0.695	2,495	218W4C	Apr-81		5	Solid	Mixed		
TRUM	CH	16538-2	EBR II cask	0.695	2,495	218W4C	May-81		10	Solid	Mixed		
TRUM	CH	16538-3	EBR II cask	0.695	2,495	218W4C	May-81		8	Solid	Mixed		
TRUM	CH	16538-4	EBR II cask	0.695	2,495	218W4C	Sep-82		20	Solid	Mixed		
TRUM	CH	75DMAIS02	Metal box	11.015	4,940	218W3A	May-75		1	Solid	Mixed		
TRUM	CH	9703456	Metal drum	0.322	99	FS11	Sep-98	0.00	1	Liquid	Mixed	D001 D005 WP01 WT02	
TRUM	CH	BL-0002-00-JCM	Metal box	0.871	493		Feb-93	0.00		Solid	Mixed		
TRUM	CH	BL-0003-00-JCM	Metal box	0.871	500		Mar-93	0.00		Solid	Mixed		
TRUM	CH	BL-0004-00-JCM	Metal box	0.871	499		Mar-93	0.00		Solid	Mixed		
TRUM	CH	BL-0005-00-JCM	Metal box	0.871	452		Mar-93	0.00		Solid	Mixed		
TRUM	CH	BL-0006-00-JCM	Metal box	0.871	486		Mar-93	0.00		Solid	Mixed		
TRUM	CH	BL-0007-00-JCM	Metal box	0.871	486		Feb-93	0.00		Solid	Mixed		
TRUM	CH	BL-0051-00-JMS	Metal box	10.030	1,450		Feb-93	0.00		Solid	Mixed		
TRUM	CH	BL-0104-00-ECV	Metal box	4.430	998		Apr-93	0.00		Solid	Mixed		
TRUM	CH	BL-0105-00-ECV	Metal box	10.030	2,313		Apr-93	0.00		Solid	Mixed		
TRUM	CH	BL-0116-00-ECV	Metal box	3.600	795		May-93	0.00		Solid	Mixed		
TRUM	CH	BL-0145-00-ECV	Metal box	10.030	2,220		Apr-93	0.00		Solid	Mixed		
TRUM	CH	BL-0146-00-ECV	Metal box	10.030	1,970		Apr-93	0.00		Solid	Mixed		
TRUM	CH	BL-0147-00-ECV	Metal box	10.030	2,388		Apr-93	0.00		Solid	Mixed		
TRUM	CH	BL-0150-00-ECV	Metal box	4.430	1,003		Apr-93	0.00		Solid	Mixed		
TRUM	CH	BL-0151-00-ECV	Metal box	4.430	984		Apr-93	0.00		Solid	Mixed		
TRUM	CH	BL-0158-00-ECV	Metal box	10.030	7,697		#N/A	0.00		Solid	Mixed		
TRUM	CH	BL-0161-00-ECV	Metal box	10.030	2,431		Apr-93	0.00		Solid	Mixed		
TRUM	CH	BP-188053	Metal box	2.300	607	2403WC	Sep-93	0.10	1	Solid	Mixed		
TRUM	CH	F367	Glass cont.	0.004	5	2345Z	#N/A		1	Liquid	Mixed		
TRUM	CH	HEDL-011	EBR II cask	0.695	2,495	218W4C	Dec-84		90	Solid	Mixed		
TRUM	CH	HEDL-012	EBR II cask	0.695	2,495	218W4C	Dec-84		150	Solid	Mixed		
TRUM	CH	HEDL-014	EBR II cask	0.695	2,495	218W4C	Dec-84		110	Solid	Mixed		
TRUM	CH	HEDL-015	EBR II cask	0.695	2,495	218W4C	Dec-84		170	Solid	Mixed		
TRUM	CH	HEDL-016	EBR II cask	0.695	2,495	218W4C	Dec-84		100	Solid	Mixed		
TRUM	CH	LANL-S/N-051	EBR II cask	0.694	2,365	218W4C	Apr-90		2	Solid	Mixed		
TRUM	CH	LANL-S/N-052	EBR II cask	0.694	2,365	218W4C	Apr-90		10	Solid	Mixed		
TRUM	CH	LANL-S/N-053	EBR II cask	0.694	2,365	218W4C	Apr-90		10	Solid	Mixed		
TRUM	CH	LANL-S/N-054	EBR II cask	0.694	2,365	218W4C	Apr-90		5	Solid	Mixed		
TRUM	CH	LANL-S/N-055	EBR II cask	0.694	2,365	218W4C	Apr-90		3	Solid	Mixed		
TRUM	CH	LANL-S/N-058	EBR II cask	0.690	2,366	218W4C	May-90		3	Solid	Mixed		
TRUM	CH	LANL-S/N-059	EBR II cask	0.694	2,366	218W4C	May-90		4	Solid	Mixed		
TRUM	CH	LANL-S/N-060	EBR II cask	0.694	2,365	2345Z	#N/A	476.40	5	Solid	Mixed		
TRUM	CH	LANL-S/N-061	EBR II cask	0.694	2,365	218W4C	May-90		17	Solid	Mixed		

Group	Handling(P)	Package ID	Container	Contain. volume	Gross weight	Storage facility	Date into TSD	Alpha Ci, total	Bet/Ga dose rate	Matrix	Contamination	DW codes	PCB ppm
TRUM	CH	LANL-S/N-062	EBR II cask	0.694	2,365	2345Z	#N/A	269.60	1	Solid	Mixed		
TRUM	CH	LANL-S/N-063	EBR II cask	0.694	2,365	2345Z	#N/A	203.20	1	Solid	Mixed		
TRUM	CH	LANL-S/N-066	EBR II cask	0.694	2,366	218W4C	May-90		4	Solid	Mixed		
TRUM	CH	LANL-S/N-067	EBR II cask	0.694	2,366	218W4C	May-90		2	Solid	Mixed		
TRUM	CH	LANL-S/N-068	EBR II cask	0.694	2,366	218W4C	May-90		7	Solid	Mixed		
TRUM	CH	LANL-S/N-069	EBR II cask	0.690	2,320	218W4C	May-90		4	Solid	Mixed		
TRUM	CH	LANL-S/N-070	EBR II cask	0.694	2,366	218W4C	May-90		2	Solid	Mixed		
TRUM	CH	PFP-93-000917	Metal box	0.227	0		#N/A			Solid	Mixed		
TRUM	CH	PFP-93-000918	Metal box	0.227	0		#N/A			Solid	Mixed		
TRUM	CH	PFP-93-001115	Wood box	0.227	0		#N/A			Solid	Mixed		
TRUM	CH	PFP-93-001116	Wood box	0.227	0		Mar-94			Solid	Mixed		
TRUM	CH	PFP-94-000020	Metal box	0.227	0		#N/A			Solid	Mixed		
TRUM	CH	PFP-94-000021	Metal box	0.227	0		#N/A			Solid	Mixed		
TRUM	CH	PFP-94-000022	Metal box	0.227	0		#N/A			Solid	Mixed		
TRUM	CH	PFP-94-000023	Metal box	0.227	0		#N/A			Solid	Mixed		
TRUM	CH	PFP-94-000799	Fiberboard box	0.142	0		#N/A			Solid	Mixed		
TRUM	CH	PFP-94-000800	Fiberboard box	0.142	0		#N/A			Solid	Mixed		
TRUM	CH	PFP-94-000802	Fiberboard box	0.142	18		#N/A			Solid	Mixed		
TRUM	CH	PFP-94-000803	Fiberboard box	0.142	18		#N/A			Solid	Mixed		
TRUM	CH	PFP-94-000804	Fiberboard box	0.142	18		#N/A			Solid	Mixed		
TRUM	CH	PFP-94-000805	Fiberboard box	0.142	18		#N/A			Solid	Mixed		
TRUM	CH	PFP-94-000875	Fiberboard box	0.148	20		#N/A			Solid	Mixed		
TRUM	CH	PFP-95-000008	Fiberboard box	0.340	20		#N/A			Solid	Mixed		
TRUM	CH	PNL-TRU-95015	Metal box	4.200	1,882	2403WB	Sep-95	0.03	150	Solid	Mixed		
TRUM	CH	RH-A-85-SB-02	Metal box	0.840	485	2403WC	Mar-94	0.05	1	Solid	Mixed		
TRUM	CH	RH-A-85-SB-03	Metal box	0.840	485	2403WC	Mar-94	1.70	1	Solid	Mixed		
TRUM	CH	RH-A-86-SB-04	Metal box	0.840	451	2403WC	Mar-94	1.10	1	Solid	Mixed		
TRUM	CH	RH-A-86-SB-05	Metal box	0.840	499	2403WC	Mar-94	0.20	1	Solid	Mixed		
TRUM	CH	RH-A-89-SB-07	Metal box	0.840	499	2403WC	Mar-94	1.60	1	Solid	Mixed		
TRUM	CH	RH-A-89-SB-08	Metal box	0.840	492	2403WC	Mar-94	1.40	1	Solid	Mixed		
TRUM	CH	RH-A-SB-84-06	Metal box	7.136	2,159	2402WL	Aug-89	2.19	1	Solid	Mixed		
TRUM	CH	RHZ-211-A20917	Metal drum	0.210	46	2402WB	Jun-90	0.00	1	Liquid	Mixed PCB	WT02	50-499
TRUM	CH	RHZ-212-A16772	Metal drum	0.210	79	2402WD	Dec-88	0.00	1	Liquid	Mixed PCB	D001 WT01	>499
TRUM	CH	RHZ-212-A16779	Metal drum	0.210	95	2402WD	Dec-88	0.00	1	Liquid	Mixed PCB	D001 WT01	>499
TRUM	CH	RHZ-212-A16788	Metal drum	0.210	69	2402WD	Dec-88	0.01	1	Liquid	Mixed PCB	D001 WT01	>499
TRUM	CH	RHZ-212-A16789	Metal drum	0.210	95	2402WD	Dec-88	0.01	1	Liquid	Mixed PCB	D001 WT01	>499
TRUM	CH	RHZ-212-A16801	Metal drum	0.210	50	2402WD	Dec-88	0.00	1	Liquid	Mixed PCB	D001 WT01	>499
TRUM	CH	RHZ-212-A16802	Metal drum	0.210	72	2402WD	Dec-88	0.00	1	Liquid	Mixed PCB	D001 WT01	>499
TRUM	CH	RHZ-212-A16803	Metal drum	0.210	48	2402WD	Dec-88	0.00	1	Liquid	Mixed PCB	D001 WT01	>499
TRUM	CH	RHZ-212-A22890	Metal drum	0.208	86	2402WE	Apr-94	6.01	1	Liquid	Mixed	D019 WP01 WT02	
TRUM	CH	RHZ-212-A22891	Metal drum	0.208	87	2402WE	Apr-94	6.34	1	Liquid	Mixed	D019 WC02 WP01 WT02	
TRUM	CH	RHZ-212-A22892	Metal drum	0.208	86	2402WE	Apr-94	0.48	1	Liquid	Mixed	D019 WC02 WP01 WT02	

Group	Handling(P)	Package ID	Container	Contain. volume	Gross weight	Storage facility	Date into TSD	Alpha Ci, total	Bet/Ga dose rate	Matrix	Contamination	DW codes	PCB ppm
TRUM	CH	RHZ-212-A22893	Metal drum	0.208	86	2403WB	Apr-94	0.40	1	Liquid	Mixed	D019 WC02 WP01 WT02	
TRUM	CH	RHZ-212-A22922	Metal drum	0.208	82	2402WE	Apr-94	0.32	1	Liquid	Mixed	D019 WC02 WP01 WT02	
TRUM	CH	RHZ-213-A13696	Metal drum	0.210	67	2402WD	Dec-88	0.08	1	Liquid	Mixed PCB	D001 WT01	>499
TRUM	CH	RHZ-213-A18660	Metal drum	0.210	77	2402WD	Dec-88	0.00	1	Liquid	Mixed PCB	D001 WT01	>499
TRUM	CH	RHZ-213-A19318	Metal drum	0.210	112	2402WB	Jul-89	0.00	1	Liquid	Mixed PCB	WT02	>499
TRUM	CH	RHZ-213-A19387	Metal drum	0.210	58	2402WB	Jun-89	0.00	1	Liquid	Mixed PCB	WT02	>499
TRUM	CH	RHZ-213-A19394	Metal drum	0.210	55	2402WB	Jun-89	0.00	1	Liquid	Mixed PCB	WT02	>499
TRUM	CH	RHZ-213-A19395	Metal drum	0.210	100	2402WB	Jun-89	0.02	1	Liquid	Mixed PCB	WT02	>499
TRUM	CH	RHZ-213-A19396	Metal drum	0.210	96	2402WB	Jun-89	0.01	1	Liquid	Mixed PCB	WT02	>499
TRUM	CH	RHZ-213-A19875	Metal drum	0.210	105	2402WB	Jul-89	0.00	1	Liquid	Radioactive PCB	WT02	>499
TRUM	CH	RHZ-219-930228	Metal drum	0.208	44	FS20	May-93	0.52	1	Liquid	Mixed	D001 WL01 WP01 WT01	
TRUM	CH	RHZ-219-940001	Metal box	2.040	408	2403WC	Jan-94	1.61	1	Solid	Mixed		
TRUM	CH	RHZ-219-940256	Metal box	2.040	435	2403WC	Mar-94	0.08	1	Solid	Mixed		
TRUM	CH	RHZ-220-A16890	Metal drum	0.210	86	2402WD	Dec-88	0.01	1	Liquid	Mixed PCB	D001 WT01	>499
TRUM	CH	RHZ-231Z-9334	Metal box	1.900	386	2403WC	Dec-93	0.28	1	Solid	Mixed		
TRUM	CH	RHZ-85-001	Metal box	7.136	2,177	2403WC	Aug-89	5.93	1	Solid	Mixed		
TRUM	CH	RHZ-85-002	Metal box	7.136	2,455	2402WL	Aug-89	24.68	1	Solid	Mixed PCB	D006 D009 WC02 WT01	>499
TRUM	CH	RHZ-85-009	Metal box	3.300	796	2403WC	Aug-94	0.97	1	Solid	Mixed		
TRUM	CH	RHZ-86-002	Metal box	3.172	2,451	2402WL	Aug-89	5.62	1	Solid	Mixed PCB	D006 D008 D009 WC02 WT01	>499
TRUM	CH	RHZ-86-010	Metal box	9.611	3,900	2402WL	Aug-89	4.37	1	Solid	Mixed PCB	D006 D008 D009 WC02 WT01	>499
TRUM	CH	RHZ-86-013	Metal box	3.300	1,004	2403WB	Aug-94	0.00	1	Solid	Mixed		
TRUM	CH	RHZ-86-014	Metal box	3.172	1,043	2402WC	Aug-89	0.86	1	Solid	Mixed		
TRUM	CH	RHZ-86-019	Metal box	9.607	2,225	2403WC	Aug-94	2.82	1	Solid	Mixed		
TRUM	CH	RHZ-86-020	Metal box	9.607	1,973	2403WD	Aug-94	23.40	1	Solid	Mixed		
TRUM	CH	RHZ-86-022	Metal box	4.200	1,000	2403WC	Aug-94	0.40	1	Solid	Mixed		
TRUM	CH	RHZ-87-023	Metal box	4.205	1,361	2403WC	Aug-89	6.01	1	Solid	Mixed		
TRUM	CH	RHZ-87-024	Metal box	4.200	1,531	2403WC	Aug-94	4.04	1	Solid	Mixed		
TRUM	CH	RHZ-87-025	Metal box	4.205	1,315	2402WL	Jul-89	1.55	1	Solid	Mixed PCB	D006 D009 WC02 WT01	>499
TRUM	CH	RHZ-87-026	Metal box	4.200	986	2403WC	Aug-94	7.42	1	Solid	Mixed		
TRUM	CH	RHZ-87-028	Metal box	4.205	1,497	2402WL	Aug-89	5.31	1	Solid	Mixed PCB	D006 D009 WC02 WT01	>499
TRUM	CH	RHZ-87-029	Metal box	4.205	1,542	2402WL	Jul-89	0.16	1	Solid	Mixed PCB	D006 D009 WC02 WT01	>499
TRUM	CH	RHZ-87-031	Metal box	4.205	2,359	2402WL	Aug-89	2.03	1	Solid	Mixed PCB	D006 D009 WC02 WT01	>499
TRUM	CH	RHZ-87-034	Metal box	9.607	2,393	2403WC	Aug-94	6.86	1	Solid	Mixed		
TRUM	CH	RHZ-87-035	Metal box	9.607	5,360	2403WC	Aug-94	0.00	1	Solid	Mixed		
TRUM	CH	RHZ-87-036	Metal box	9.607	2,727	2403WC	Aug-94	0.00	1	Solid	Mixed		
TRUM	CH	RHZ-87-037	Metal box	4.205	2,631	2402WL	Aug-89	0.54	1	Solid	Mixed PCB	D006 D008 D009 WC02 WT01	>499
TRUM	CH	RHZ-87-038	Metal box	9.607	2,318	2403WC	Aug-94	0.00	1	Solid	Mixed		
TRUM	CH	RHZ-87-039	Metal box	9.611	1,880	2402WL	Aug-89	3.57	1	Solid	Mixed PCB	D006 D009 WC02 WT01	>499
TRUM	CH	RHZ-87-041	Metal box	9.611	5,229	2402WL	Aug-89	4.76	1	Solid	Mixed PCB	D006 D008 D009 WC01 WT01	>499
TRUM	CH	RHZ-87-044	Metal box	9.611	3,441	2402WL	Aug-89	22.10	0 -	Solid	Mixed PCB	D006 D009 WC02 WT01	>499
TRUM	CH	WH82-057	Metal box	14.272	4,536	218W4C	Oct-82			Solid	Mixed		
TRUM	CH	WH86080	EBR II cask	0.695	2,263	218W3A	Apr-87	81.11	8	Solid	Mixed		

Group	Handling(P)	Package ID	Container	Contain. volume	Gross weight	Storage facility	Date into TSD	Alpha Ci, total	Bet/Ga dose rate	Matrix	Contamination	DW codes	PCB ppm
TRUM	CH	WH-86-081	EBR II cask	0.695	2,263	218W3A	Apr-87	257.60	100	Solid	Mixed		
TRUM	CH	WH-86-084	EBR II cask	0.695	2,263	218W3A	Apr-87	312.40	120	Solid	Mixed		
TRUM	CH	WH-86-085	EBR II cask	0.695	2,263	218W3A	Mar-87	257.50	50	Solid	Mixed		
TRUM	CH	WH-86-086	EBR II cask	0.695	2,263	218W3A	Mar-87	359.00	26	Solid	Mixed		
TRUM	CH	ZORG-83-03-119	Metal drum	0.210	80	2402WB	Nov-83		1	Liquid	Radioactive PCB		50-499
TRUM	CH	ZORG-83-03-120	Metal drum	0.210	80	2402WB	Nov-83		1	Liquid	Radioactive PCB		50-499
TRUM	CH	ZORG-83-03-126	Metal drum	0.210	80	2402WB	Nov-83		1	Liquid	Radioactive PCB		50-499
TRUM	CH	ZORG-83-03-127	Metal drum	0.210	80	2402WB	Nov-83		1	Liquid	Radioactive PCB		50-499
TRUM	CH	Z-ORG-A11006	Metal drum	0.210	95	2402WB	May-85	0.01	1	Liquid	Radioactive PCB	D001	>499
TRUM	CH	Z-ORG-A11013	Metal drum	0.210	85	2402WB	May-85	0.02	1	Liquid	Radioactive PCB	D001	50-499
TRUM	CH	Z-ORG-A11207	Metal drum	0.210	95	2402WB	May-85	0.00	1	Liquid	Radioactive PCB	D001	>499
TRUM	CH	Z-ORG-A11419	Metal drum	0.210	95	2402WB	May-85	0.00	1	Liquid	Radioactive PCB	D001	>499
TRUM	CH	Z-ORG-A11694	Metal drum	0.210	95	2402WB	May-85	0.00	1	Liquid	Radioactive PCB	D001	>499
TRUM	CH	Z-ORG-A11695	Metal drum	0.210	95	2402WB	May-85	0.00	1	Liquid	Radioactive PCB	D001	>499
TRUM	CH	Z-ORG-A11751	Metal drum	0.210	95	2402WB	May-85	0.00	1	Liquid	Radioactive PCB	D001	>499
TRUM	CH	Z-ORG-A11752	Metal drum	0.210	95	2402WB	May-85	0.00	1	Liquid	Radioactive PCB	D001	>499
TRUM	CH	Z-ORG-A12556	Metal drum	0.210	95	2402WB	May-85	0.01	1	Liquid	Radioactive PCB	D001	>499
TRUM	CH	Z-ORG-A12557	Metal drum	0.210	95	2402WB	May-85	0.01	1	Liquid	Radioactive PCB	D001	>499
TRUM	CH	Z-ORG-A12558	Metal drum	0.210	95	2402WB	May-85	0.01	1	Liquid	Radioactive PCB	D001	>499
TRUM	CH	Z-ORG-A12559	Metal drum	0.210	95	2402WB	May-85	0.01	1	Liquid	Radioactive PCB	D001	>499
TRUM	CH	Z-ORG-A12734	Metal drum	0.210	95	2402WB	May-85	0.00	1	Liquid	Radioactive PCB	D001	>499
TRUM	CH	Z-ORG-A12735	Metal drum	0.210	95	2402WB	May-85	0.00	1	Liquid	Radioactive PCB	D001	>499
TRUM	CH	Z-ORG-A8921	Metal drum	0.210	72	2402WB	Aug-82		1	Liquid	Radioactive PCB		>499
TRUM	CH	Z-ORG-A8924	Metal drum	0.210	72	2402WB	Aug-82	0.00	1	Liquid	Radioactive PCB	D001	>499
TRUM	CH	Z-ORG-A8993	Metal drum	0.210	85	2402WB	Sep-82		1	Liquid	Radioactive PCB		>499
TRUM	CH	Z-ORG-A8994	Metal drum	0.210	85	2402WB	Sep-82		1	Liquid	Radioactive PCB		>499
TRUM	CH	Z-ORG-A8995	Metal drum	0.210	85	2402WB	Sep-82		1	Liquid	Radioactive PCB		>499
TRUM	CH	Z-ORG-A8996	Metal drum	0.210	85	2402WB	Sep-82		1	Liquid	Radioactive PCB		>499
TRU	RH	105KE-76-0002S	Wood box	2.265	1,016	218W3A	Feb-76		2,500	Solid	Radioactive		
TRU	RH	105KE-76-0003S	Wood box	2.265	1,016	218W3A	Feb-76		3,000	Solid	Radioactive		
TRU	RH	105KE-76-0004S	Wood box	2.265	1,016	218W3A	Mar-76		250	Solid	Radioactive		
TRU	RH	105KE-76-0005S	Fiberboard box	0.127	13	218W3A	Mar-76		250	Solid	Radioactive		
TRU	RH	105KE-76-0010S	Wood box	1.812	813	218W3A	Mar-76		700	Solid	Radioactive		
TRU	RH	105KE-76-0011S	Metal drum	0.210	68	218W3A	Apr-76		1,500	Solid	Radioactive		
TRU	RH	105KE-76-0012S	Metal drum	0.210	68	218W3A	Apr-76		1,500	Solid	Radioactive		
TRU	RH	105KE-76-0013S	Metal drum	0.210	68	218W3A	May-76		1,500	Solid	Radioactive		
TRU	RH	105KE-76-0014S	Metal drum	0.210	68	218W3A	May-76		1,500	Solid	Radioactive		
TRU	RH	105KE-76-0015S	Metal drum	0.210	68	218W3A	May-76		1,500	Solid	Radioactive		
TRU	RH	105KE-76-0016S	Metal drum	0.210	68	218W3A	May-76		1,500	Solid	Radioactive		
TRU	RH	105KE-76-0017S	Metal drum	0.210	68	218W3A	May-76		1,500	Solid	Radioactive		
TRU	RH	105KE-76-0018S	Metal drum	0.210	68	218W3A	May-76		1,500	Solid	Radioactive		
TRU	RH	105KE-76-0019S	Metal drum	0.210	68	218W3A	Jun-76		2,000	Solid	Radioactive		

Group	Handling(P)	Package ID	Container	Contain. volume	Gross weight	Storage facility	Date into TSD	Alpha Ci, total	Bet/Ga dose rate	Matrix	Contamination	DW codes	PCB ppm
TRU	RH	105KE-76-0020S	Metal drum	0.210	68	218W3A	Jun-76		2,000	Solid	Radioactive		
TRU	RH	105KE-76-0021S	Metal drum	0.210	68	218W3A	Jun-76		2,000	Solid	Radioactive		
TRU	RH	105KE-76-0022S	Metal drum	0.210	68	218W3A	Jun-76		2,000	Solid	Radioactive		
TRU	RH	105KE-76-0023S	Wood box	1.812	813	218W3A	Jun-76		2,000	Solid	Radioactive		
TRU	RH	105KE-76-0025S	Metal drum	0.210	94	218W3A	Jun-76		375	Solid	Radioactive		
TRU	RH	105KE-76-0026S	Metal drum	0.210	94	218W3A	Jun-76		375	Solid	Radioactive		
TRU	RH	105KE-76-0027S	Metal drum	0.210	94	218W3A	Jun-76		375	Solid	Radioactive		
TRU	RH	105KE-76-0028S	Metal drum	0.210	94	218W3A	Jun-76		375	Solid	Radioactive		
TRU	RH	105KE-76-0046S	Wood box	1.812	813	218W3A	Aug-76		1,000	Solid	Radioactive		
TRU	RH	105KE-76-0047S	Wood box	1.812	813	218W3A	Aug-76		1,000	Solid	Radioactive		
TRU	RH	105KE-76-0048S	Fiberboard box	1.019	457	218W3A	Sep-76		375	Solid	Radioactive		
TRU	RH	105KE-76-0049S	Flatbed	0.651	292	218W3A	Sep-76		375	Solid	Radioactive		
TRU	RH	105KE-76-0050S	Metal drum	0.210	97	218W3A	Sep-76		375	Solid	Radioactive		
TRU	RH	105KE-76-0051S	Metal drum	0.210	97	218W3A	Sep-76		375	Solid	Radioactive		
TRU	RH	105KE-76-0057S	Wood box	1.812	813	218W3A	Oct-76		1,755	Solid	Radioactive		
TRU	RH	105KE-76-0058S	Wood box	1.812	813	218W3A	Oct-76		1,755	Solid	Radioactive		
TRU	RH	105KE-76-0062S	Wood box	1.812	813	218W3A	Nov-76		1,250	Solid	Radioactive		
TRU	RH	105KE-76-0063S	Wood box	1.812	813	218W3A	Nov-76		1,250	Solid	Radioactive		
TRU	RH	105KE-77-0001S	Wood box	1.812	813	218W3A	Jan-77		450	Solid	Radioactive		
TRU	RH	105KE-77-0002S	Wood box	1.812	813	218W3A	Jan-77		450	Solid	Radioactive		
TRU	RH	105KE-77-0006S	FRP box	3.172	1,422	218W4B	Aug-77		1,500	Solid	Radioactive		
TRU	RH	105KE-77-0007S	FRP box	3.172	1,422	218W4B	Oct-77		1,000	Solid	Radioactive		
TRU	RH	105KE-78-0001S	FRP box	3.172	1,422	218W3A	Jan-78		1,300	Solid	Radioactive		
TRU	RH	105KE-78-0002S	FRP box	3.172	1,422	218W3A	Jan-78		1,300	Solid	Radioactive		
TRU	RH	105KE-78-0003S	FRP box	3.172	1,422	218W3A	Apr-78		4,500	Solid	Radioactive		
TRU	RH	105KE-78-0004S	FRP box	3.172	1,422	218W3A	Apr-78		4,500	Solid	Radioactive		
TRU	RH	105KE-78-0009S	FRP box	3.172	680	218W4B	Jul-78		1,500	Solid	Radioactive		
TRU	RH	202A-70-0333S	Metal drum	0.210	68	218E12B	Aug-70		300	Solid	Radioactive		
TRU	RH	202A-71-0103S	Metal drum	0.210	68	218E12B	Jan-71		300	Solid	Radioactive		
TRU	RH	202A-71-0104S	Metal drum	0.210	68	218E12B	Jan-71		250	Solid	Radioactive		
TRU	RH	202A-71-0334S	Metal drum	0.210	68	218E12B	Apr-71		400	Solid	Radioactive		
TRU	RH	202A-71-0394S	Metal drum	0.210	68	218E12B	May-71		300	Solid	Radioactive		
TRU	RH	202A-71-0485S	Metal drum	0.210	68	218E12B	Jun-71		450	Solid	Radioactive		
TRU	RH	202A-72-0027S	Metal drum	0.210	68	218E12B	Jan-72		800	Solid	Radioactive		
TRU	RH	202A-72-0033S	Metal drum	0.210	68	218E12B	Jan-72		500	Solid	Radioactive		
TRU	RH	202A-72-0079S	Metal drum	0.210	68	218E12B	Feb-72		300	Solid	Radioactive		
TRU	RH	202A-72-0174S	Metal drum	0.210	68	218E12B	Apr-72		1,000	Solid	Radioactive		
TRU	RH	202A-72-0221S	Metal drum	0.210	68	218E12B	May-72		300	Solid	Radioactive		
TRU	RH	202A-72-0242S	Metal drum	0.210	68	218E12B	May-72		250	Solid	Radioactive		
TRU	RH	202A-72-0269S	Metal box	2.379	1,067	218E12B	Jun-72		1,500	Solid	Radioactive		
TRU	RH	202A-72-0368S	Fiberboard box	0.127	13	218E12B	Sep-72		2,000	Solid	Radioactive		
TRU	RH	202A-72-0369S	Fiberboard box	0.127	13	218E12B	Sep-72		1,500	Solid	Radioactive		

Group	Handling(P)	Package ID	Container	Contain. volume	Gross weight	Storage facility	Date into TSD	Alpha Ci, total	Bet/Ga dose rate	Matrix	Contamination	DW codes	PCB ppm
TRU	RH	202AL-70-0077S	Metal drum	0.210	68	218E12B	May-70		2,500	Solid	Radioactive		
TRU	RH	202AL-70-0090S	Metal drum	0.210	68	218E12B	May-70		1,500	Solid	Radioactive		
TRU	RH	202AL-70-0107S	Metal drum	0.210	68	218E12B	May-70		2,000	Solid	Radioactive		
TRU	RH	202AL-70-0108S	Metal drum	0.210	68	218E12B	May-70		600	Solid	Radioactive		
TRU	RH	202AL-70-0130S	Metal drum	0.210	68	218E12B	May-70		2,500	Solid	Radioactive		
TRU	RH	202AL-70-0147S	Metal drum	0.210	68	218E12B	Jun-70		5,000	Solid	Radioactive		
TRU	RH	202AL-70-0160S	Metal drum	0.210	68	218E12B	Jun-70		2,500	Solid	Radioactive		
TRU	RH	202AL-70-0206S	Metal drum	0.210	68	218E12B	Jul-70		1,000	Solid	Radioactive		
TRU	RH	202AL-71-0057S	Metal drum	0.210	68	218E12B	Mar-71		300	Solid	Radioactive		
TRU	RH	202AL-71-0094S	Metal drum	0.210	68	218E12B	Mar-71		3,500	Solid	Radioactive		
TRU	RH	202AL-71-0095S	Metal drum	0.210	68	218E12B	Mar-71		2,000	Solid	Radioactive		
TRU	RH	202AL-71-0096S	Metal drum	0.210	68	218E12B	Mar-71		1,500	Solid	Radioactive		
TRU	RH	202AL-71-0129S	Metal drum	0.210	68	218E12B	Apr-71		700	Solid	Radioactive		
TRU	RH	202AL-71-0140S	Metal drum	0.210	68	218E12B	Apr-71		400	Solid	Radioactive		
TRU	RH	202AL-71-0153S	Metal drum	0.210	68	218E12B	Apr-71		2,000	Solid	Radioactive		
TRU	RH	202AL-71-0188S	Metal drum	0.210	68	218E12B	May-71		26,000	Solid	Radioactive		
TRU	RH	202AL-71-0199S	Metal drum	0.210	68	218E12B	May-71		1,000	Solid	Radioactive		
TRU	RH	202AL-71-0201S	Metal drum	0.210	68	218E12B	Jun-71		5,000	Solid	Radioactive		
TRU	RH	202AL-71-0202S	Metal drum	0.210	68	218E12B	Jun-71		3,000	Solid	Radioactive		
TRU	RH	202AL-71-0203S	Metal drum	0.210	68	218E12B	Jun-71		300	Solid	Radioactive		
TRU	RH	202AL-71-0215S	Metal drum	0.210	68	218E12B	Jun-71		300	Solid	Radioactive		
TRU	RH	202AL-71-0216S	Metal drum	0.210	68	218E12B	Jun-71		3,500	Solid	Radioactive		
TRU	RH	202AL-71-0217S	Metal drum	0.210	68	218E12B	Jun-71		4,500	Solid	Radioactive		
TRU	RH	202AL-71-0226S	Metal drum	0.210	68	218E12B	Jun-71		5,000	Solid	Radioactive		
TRU	RH	202AL-71-0227S	Metal drum	0.210	68	218E12B	Jun-71		250	Solid	Radioactive		
TRU	RH	202AL-71-0237S	Metal drum	0.210	68	218E12B	Jun-71		3,500	Solid	Radioactive		
TRU	RH	202AL-71-0238S	Metal drum	0.210	68	218E12B	Jun-71		400	Solid	Radioactive		
TRU	RH	202AL-71-0251S	Metal drum	0.210	68	218E12B	Jun-71		500	Solid	Radioactive		
TRU	RH	202AL-71-0252S	Metal drum	0.210	68	218E12B	Jun-71		5,000	Solid	Radioactive		
TRU	RH	202AL-71-0263S	Metal drum	0.210	68	218E12B	Jul-71		2,500	Solid	Radioactive		
TRU	RH	202AL-71-0274S	Metal drum	0.210	68	218E12B	Jul-71		800	Solid	Radioactive		
TRU	RH	202AL-71-0282S	Metal drum	0.210	68	218E12B	Jul-71		5,000	Solid	Radioactive		
TRU	RH	202AL-71-0289S	Metal drum	0.210	68	218E12B	Jul-71		3,000	Solid	Radioactive		
TRU	RH	202AL-71-0290S	Metal drum	0.210	68	218E12B	Jul-71		450	Solid	Radioactive		
TRU	RH	202AL-71-0299S	Metal drum	0.210	68	218E12B	Aug-71		500	Solid	Radioactive		
TRU	RH	202AL-71-0310S	Metal drum	0.210	68	218E12B	Aug-71		1,000	Solid	Radioactive		
TRU	RH	202AL-71-0319S	Metal drum	0.210	68	218E12B	Aug-71		5,000	Solid	Radioactive		
TRU	RH	202AL-71-0334S	Metal drum	0.210	68	218E12B	Aug-71		3,000	Solid	Radioactive		
TRU	RH	202AL-71-0345S	Metal drum	0.210	68	218E12B	Sep-71		2,000	Solid	Radioactive		
TRU	RH	202AL-71-0357S	Metal drum	0.210	68	218E12B	Sep-71		2,000	Solid	Radioactive		
TRU	RH	202AL-71-0368S	Metal drum	0.210	68	218E12B	Sep-71		1,000	Solid	Radioactive		
TRU	RH	202AL-71-0377S	Metal drum	0.210	68	218E12B	Sep-71		1,000	Solid	Radioactive		

Group	Handling(P)	Package ID	Container	Contain. volume	Gross weight	Storage facility	Date into TSD	Alpha Ci, total	Bet/Ga dose rate	Matrix	Contamination	DW codes	PCB ppm
TRU	RH	202AL-71-0389S	Metal drum	0.210	68	218E12B	Sep-71		2,000	Solid	Radioactive		
TRU	RH	202AL-71-0390S	Metal drum	0.210	68	218E12B	Sep-71		1,000	Solid	Radioactive		
TRU	RH	202AL-71-0403S	Metal drum	0.210	68	218E12B	Oct-71		4,000	Solid	Radioactive		
TRU	RH	202AL-71-0412S	Metal drum	0.210	68	218E12B	Oct-71		300	Solid	Radioactive		
TRU	RH	202AL-71-0434S	Metal drum	0.210	68	218E12B	Oct-71		700	Solid	Radioactive		
TRU	RH	202AL-71-0436S	Metal drum	0.210	68	218E12B	Oct-71		3,000	Solid	Radioactive		
TRU	RH	202AL-71-0478S	Metal drum	0.210	68	218E12B	Nov-71		600	Solid	Radioactive		
TRU	RH	202AL-71-0487S	Metal drum	0.210	68	218E12B	Nov-71		4,000	Solid	Radioactive		
TRU	RH	202AL-71-0529S	Metal drum	0.210	68	218E12B	Dec-71		1,500	Solid	Radioactive		
TRU	RH	202AL-71-0563S	Metal drum	0.210	68	218E12B	Dec-71		1,500	Solid	Radioactive		
TRU	RH	202AL-71-0575S	Metal drum	0.210	68	218E12B	Dec-71		400	Solid	Radioactive		
TRU	RH	202AL-72-0019S	Metal drum	0.210	68	218E12B	Jan-72		3,000	Solid	Radioactive		
TRU	RH	202AL-72-0034S	Metal drum	0.210	68	218E12B	Jan-72		800	Solid	Radioactive		
TRU	RH	202AL-72-0048S	Metal drum	0.210	68	218E12B	Jan-72		500	Solid	Radioactive		
TRU	RH	202AL-72-0068S	Metal drum	0.210	68	218E12B	Feb-72		2,000	Solid	Radioactive		
TRU	RH	202AL-72-0082S	Metal drum	0.210	68	218E12B	Feb-72		300	Solid	Radioactive		
TRU	RH	202AL-72-0094S	Metal drum	0.210	68	218E12B	Feb-72		1,500	Solid	Radioactive		
TRU	RH	202AL-72-0104S	Metal drum	0.210	68	218E12B	Feb-72		1,000	Solid	Radioactive		
TRU	RH	202AL-72-0124S	Metal drum	0.210	68	218E12B	Mar-72		600	Solid	Radioactive		
TRU	RH	202AL-72-0139S	Metal drum	0.210	68	218E12B	Mar-72		1,000	Solid	Radioactive		
TRU	RH	202AL-72-0140S	Metal drum	0.210	68	218E12B	Mar-72		1,000	Solid	Radioactive		
TRU	RH	202AL-72-0159S	Metal drum	0.210	68	218E12B	Mar-72		2,000	Solid	Radioactive		
TRU	RH	202AL-72-0160S	Metal drum	0.210	68	218E12B	Mar-72		1,500	Solid	Radioactive		
TRU	RH	202AL-72-0175S	Metal drum	0.210	68	218E12B	Mar-72		2,000	Solid	Radioactive		
TRU	RH	202AL-72-0176S	Metal drum	0.210	68	218E12B	Mar-72		2,000	Solid	Radioactive		
TRU	RH	202AL-72-0207S	Metal drum	0.210	68	218E12B	Apr-72		2,000	Solid	Radioactive		
TRU	RH	202AL-72-0379S	Metal drum	0.210	68	218E12B	Jul-72		800	Solid	Radioactive		
TRU	RH	202AL-72-0380S	Metal drum	0.210	68	218E12B	Jul-72		5,000	Solid	Radioactive		
TRU	RH	202AL-72-0381S	Metal drum	0.210	68	218E12B	Jul-72		20,000	Solid	Radioactive		
TRU	RH	202AL-72-0405S	Metal drum	0.116	41	218E12B	Aug-72		350	Solid	Radioactive		
TRU	RH	202AL-72-0406S	Metal drum	0.116	41	218E12B	Aug-72		400	Solid	Radioactive		
TRU	RH	202AL-72-0409S	Metal drum	0.210	68	218E12B	Aug-72		500	Solid	Radioactive		
TRU	RH	202AL-72-0426S	Metal drum	0.210	68	218E12B	Aug-72		1,000	Solid	Radioactive		
TRU	RH	202AL-72-0427S	Metal drum	0.210	68	218E12B	Aug-72		700	Solid	Radioactive		
TRU	RH	202AL-72-0428S	Metal drum	0.210	68	218E12B	Aug-72		400	Solid	Radioactive		
TRU	RH	202AL-72-0453S	Metal drum	0.210	68	218E12B	Aug-72		7,000	Solid	Radioactive		
TRU	RH	202AL-72-0454S	Metal drum	0.210	68	218E12B	Aug-72		30,000	Solid	Radioactive		
TRU	RH	202AL-72-0455S	Metal drum	0.210	68	218E12B	Aug-72		30,000	Solid	Radioactive		
TRU	RH	202AL-72-0456S	Metal drum	0.210	68	218E12B	Aug-72		20,000	Solid	Radioactive		
TRU	RH	222S-70-0097S	Metal drum	0.116	41	218W3A	May-70		10,000	Solid	Radioactive		
TRU	RH	325-70-0173S	HEPA filters	7.079	3,175	218W3A	Aug-70		500	Solid	Radioactive		
TRU	RH	325-72-0767S	Concrete box	1.812	1,433	218W4B	Aug-72		2,625	Solid	Radioactive		

Group	Handling(P)	Package ID	Container	Contain. volume	Gross weight	Storage facility	Date into TSD	Alpha Ci, total	Bet/Ga dose rate	Matrix	Contamination	DW codes	PCB ppm
TRU	RH	325-72-0768S	Concrete box	1.812	1,433	218W4B	Aug-72		2,625	Solid	Radioactive		
TRU	RH	325-72-0769S	Concrete box	1.812	1,433	218W4B	Aug-72		2,625	Solid	Radioactive		
TRU	RH	325-72-0770S	Metal box	1.812	813	218W4B	Aug-72		2,625	Solid	Radioactive		
TRU	RH	325-72-0771S	Metal box	1.812	813	218W4B	Aug-72		2,625	Solid	Radioactive		
TRU	RH	325-72-0881S	Concrete box	0.765	813	218W4B	Oct-72		1,000	Solid	Radioactive		
TRU	RH	325-72-0882S	Concrete box	0.765	813	218W4B	Oct-72		1,000	Solid	Radioactive		
TRU	RH	325-72-0883S	Concrete box	0.765	813	218W4B	Oct-72		1,000	Solid	Radioactive		
TRU	RH	325-72-0884S	Concrete box	0.765	813	218W4B	Oct-72		1,000	Solid	Radioactive		
TRU	RH	325-72-0885S	Concrete box	0.765	813	218W4B	Oct-72		1,000	Solid	Radioactive		
TRU	RH	325-72-0886S	Concrete box	0.765	813	218W4B	Oct-72		1,000	Solid	Radioactive		
TRU	RH	325-72-0887S	Concrete box	0.765	813	218W4B	Oct-72		1,000	Solid	Radioactive		
TRU	RH	325-72-0888S	Concrete box	0.765	813	218W4B	Oct-72		1,000	Solid	Radioactive		
TRU	RH	325-72-0889S	Concrete box	0.765	813	218W4B	Oct-72		1,000	Solid	Radioactive		
TRU	RH	325-72-0890S	Concrete box	0.765	813	218W4B	Oct-72		1,000	Solid	Radioactive		
TRU	RH	325-72-0891S	Concrete box	0.765	813	218W4B	Oct-72		1,000	Solid	Radioactive		
TRU	RH	325-72-0892S	Concrete box	0.765	813	218W4B	Oct-72		1,000	Solid	Radioactive		
TRU	RH	325-72-0893S	Concrete box	0.765	813	218W4B	Oct-72		1,000	Solid	Radioactive		
TRU	RH	325A-70-0024S	Metal drum	0.028	20	218W4B	Jul-70		20	Solid	Radioactive		
TRU	RH	325A-70-0025S	Metal drum	0.028	20	218W4B	Jul-70		20	Solid	Radioactive		
TRU	RH	325A-70-0026S	Metal drum	0.028	20	218W4B	Aug-70		10	Solid	Radioactive		
TRU	RH	325A-70-0027S	Metal drum	0.028	20	218W4B	Aug-70		10	Solid	Radioactive		
TRU	RH	325A-70-0028S	Metal drum	0.028	20	218W4B	Aug-70		10	Solid	Radioactive		
TRU	RH	325A-70-0029S	Metal drum	0.028	20	218W4B	Aug-70		10	Solid	Radioactive		
TRU	RH	325A-70-0030S	Metal drum	0.028	20	218W4B	Aug-70		5	Solid	Radioactive		
TRU	RH	325A-70-0031S	Metal drum	0.028	20	218W4B	Aug-70		5	Solid	Radioactive		
TRU	RH	325A-70-0038S	Metal drum	0.028	20	218W4B	Oct-70		10	Solid	Radioactive		
TRU	RH	325A-71-0003S	Metal drum	0.028	20	218W4B	Feb-71		30	Solid	Radioactive		
TRU	RH	325A-71-0005S	Metal drum	0.028	20	218W4B	Feb-71		10	Solid	Radioactive		
TRU	RH	325A-71-0006S	Metal drum	0.028	20	218W4B	Feb-71		10	Solid	Radioactive		
TRU	RH	325A-71-0007S	Metal drum	0.028	20	218W4B	Feb-71		5	Solid	Radioactive		
TRU	RH	325A-71-0008S	Metal drum	0.028	20	218W4B	Feb-71		5	Solid	Radioactive		
TRU	RH	325A-71-0009S	Metal drum	0.028	20	218W4B	Feb-71		5	Solid	Radioactive		
TRU	RH	325A-71-0010S	Metal drum	0.028	20	218W4B	Feb-71		5	Solid	Radioactive		
TRU	RH	325A-71-0011S	Metal drum	0.028	20	218W4B	Feb-71		5	Solid	Radioactive		
TRU	RH	325A-71-0012S	Metal drum	0.028	20	218W4B	Feb-71		5	Solid	Radioactive		
TRU	RH	325A-71-0013S	Metal drum	0.028	20	218W4B	Feb-71		5	Solid	Radioactive		
TRU	RH	325A-71-0014S	Metal drum	0.028	20	218W4B	Mar-71		10	Solid	Radioactive		
TRU	RH	325A-71-0015S	Metal drum	0.028	20	218W4B	Mar-71		5	Solid	Radioactive		
TRU	RH	325A-71-0016S	Metal drum	0.028	20	218W4B	Apr-71		1	Solid	Radioactive		
TRU	RH	325A-71-0018S	Metal drum	0.028	20	218W4B	Apr-71		5	Solid	Radioactive		
TRU	RH	325A-71-0019S	Metal drum	0.028	20	218W4B	Apr-71		5	Solid	Radioactive		
TRU	RH	325A-71-0027S	Metal drum	0.028	20	218W4B	Jun-71		10	Solid	Radioactive		

Group	Handling(P)	Package ID	Container	Contain. volume	Gross weight	Storage facility	Date into TSD	Alpha Ci, total	Bet/Ga dose rate	Matrix	Contamination	DW codes	PCB ppm
TRU	RH	325A-71-0028S	Metal drum	0.028	20	218W4B	Jun-71		10	Solid	Radioactive		
TRU	RH	325A-71-0029S	Metal drum	0.028	20	218W4B	Jun-71		10	Solid	Radioactive		
TRU	RH	325A-71-0040S	Metal drum	0.028	20	218W4B	Jul-71		5	Solid	Radioactive		
TRU	RH	325A-72-0001S	Metal drum	0.028	20	218W4B	Jan-72		5	Solid	Radioactive		
TRU	RH	325A-72-0004S	Metal drum	0.028	20	218W4B	Apr-72		2	Solid	Radioactive		
TRU	RH	325A-72-0005S	Metal drum	0.028	20	218W4B	Apr-72		2	Solid	Radioactive		
TRU	RH	325A-72-0008S	Metal drum	0.028	20	218W4B	Jun-72		2	Solid	Radioactive		
TRU	RH	325A-72-0010S	Metal drum	0.028	20	218W4B	Jul-72		20	Solid	Radioactive		
TRU	RH	325A-72-0011S	Metal drum	0.028	20	218W4B	Jul-72		100	Solid	Radioactive		
TRU	RH	325A-72-0015S	Metal drum	0.028	20	218W4B	Oct-72		5	Solid	Radioactive		
TRU	RH	325A-72-0016S	Metal drum	0.028	20	218W4B	Oct-72		5	Solid	Radioactive		
TRU	RH	325A-72-0017S	Metal drum	0.028	20	218W4B	Oct-72		5	Solid	Radioactive		
TRU	RH	325A-72-0018S	Metal drum	0.028	20	218W4B	Oct-72		4	Solid	Radioactive		
TRU	RH	325A-72-0019S	Metal drum	0.028	20	218W4B	Oct-72			Solid	Radioactive		
TRU	RH	325A-72-0020S	Metal drum	0.028	20	218W4B	Nov-72		5	Solid	Radioactive		
TRU	RH	325A-72-0021S	Metal drum	0.028	20	218W4B	Nov-72		5	Solid	Radioactive		
TRU	RH	325A-72-0022S	Metal drum	0.028	20	218W4B	Nov-72		5	Solid	Radioactive		
TRU	RH	325A-72-0023S	Metal drum	0.028	20	218W4B	Nov-72		5	Solid	Radioactive		
TRU	RH	325A-72-0024S	Metal drum	0.028	20	218W4B	Nov-72		5	Solid	Radioactive		
TRU	RH	325A-72-0025S	Metal drum	0.028	20	218W4B	Nov-72		5	Solid	Radioactive		
TRU	RH	325A-72-0026S	Metal drum	0.028	20	218W4B	Nov-72		5	Solid	Radioactive		
TRU	RH	325A-73-0001S	Metal drum	0.028	20	218W4B	Jan-73		5	Solid	Radioactive		
TRU	RH	325A-73-0008S	Metal drum	0.028	20	218W4B	Feb-73		5	Solid	Radioactive		
TRU	RH	325A-73-0009S	Metal drum	0.028	20	218W4B	Feb-73		5	Solid	Radioactive		
TRU	RH	325A-73-0010S	Metal drum	0.028	20	218W4B	Feb-73		5	Solid	Radioactive		
TRU	RH	325A-73-0011S	Metal drum	0.028	20	218W4B	Feb-73		5	Solid	Radioactive		
TRU	RH	325A-75-0028S	Metal cask	8.835	3,963	218W3A	Apr-75		50	Solid	Radioactive		
TRU	RH	325A-75-0029S	Metal cask	6.796	3,048	218W3A	Apr-75		200	Solid	Radioactive		
TRU	RH	325A-75-0030S	Metal cask	6.796	3,048	218W3A	Apr-75		200	Solid	Radioactive		
TRU	RH	325A-75-0031S	Metal cask	6.796	3,048	218W3A	Apr-75		200	Solid	Radioactive		
TRU	RH	325A-75-0032S	Metal cask	7.362	3,302	218W3A	Apr-75		220	Solid	Radioactive		
TRU	RH	325A-75-0033S	Metal cask	7.362	3,302	218W3A	Apr-75		220	Solid	Radioactive		
TRU	RH	325A-75-0034S	Metal cask	9.061	4,064	218W3A	Apr-75		3,000	Solid	Radioactive		
TRU	RH	325A-75-0035S	Metal cask	2.718	1,219	218W3A	Apr-75		250	Solid	Radioactive		
TRU	RH	325A-75-0036S	Metal cask	2.718	1,219	218W3A	Apr-75		250	Solid	Radioactive		
TRU	RH	325A-75-0037S	Metal cask	2.718	1,219	218W3A	Apr-75		250	Solid	Radioactive		
TRU	RH	325A-75-0038S	Metal cask	6.796	3,048	218W3A	Apr-75		800	Solid	Radioactive		
TRU	RH	325A-83-0013S	Metal drum	0.042	18	218W4B	Oct-83		5	Solid	Radioactive		
TRU	RH	325B-70-0009S	Small metal cont.	0.021	15	218W4B	Jun-70		1	Solid	Radioactive		
TRU	RH	325B-70-0010S	Small metal cont.	0.021	15	218W4B	Jun-70		1	Solid	Radioactive		
TRU	RH	325B-70-0011S	Small metal cont.	0.021	15	218W4B	Jun-70			Solid	Radioactive		
TRU	RH	325B-70-0012S	Small metal cont.	0.021	15	218W4B	Jun-70			Solid	Radioactive		

Group	Handling(P)	Package ID	Container	Contain. volume	Gross weight	Storage facility	Date into TSD	Alpha Ci, total	Bet/Ga dose rate	Matrix	Contamination	DW codes	PCB ppm
TRU	RH	325B-70-0013S	Small metal cont.	0.021	15	218W4B	Jun-70			Solid	Radioactive		
TRU	RH	325B-70-0014S	Small metal cont.	0.018	13	218W4B	Dec-70		10	Solid	Radioactive		
TRU	RH	325B-70-0015S	Small metal cont.	0.018	13	218W4B	Dec-70		10	Solid	Radioactive		
TRU	RH	325B-70-0016S	Small metal cont.	0.018	13	218W4B	Dec-70		10	Solid	Radioactive		
TRU	RH	325B-70-0017S	Small metal cont.	0.018	13	218W4B	Dec-70		10	Solid	Radioactive		
TRU	RH	325B-70-0018S	Small metal cont.	0.018	13	218W4B	Dec-70		10	Solid	Radioactive		
TRU	RH	325B-71-0001S	Small metal cont.	0.018	13	218W4B	Feb-71			Solid	Radioactive		
TRU	RH	325B-71-0002S	Small metal cont.	0.018	13	218W4B	Mar-71			Solid	Radioactive		
TRU	RH	325B-71-0003S	Small metal cont.	0.018	13	218W4B	Mar-71			Solid	Radioactive		
TRU	RH	325B-71-0004S	Small metal cont.	0.018	13	218W4B	Mar-71			Solid	Radioactive		
TRU	RH	325B-71-0005S	Small metal cont.	0.018	13	218W4B	Mar-71			Solid	Radioactive		
TRU	RH	325B-71-0006S	Small metal cont.	0.018	13	218W4B	Mar-71			Solid	Radioactive		
TRU	RH	325B-71-0007S	Small metal cont.	0.018	13	218W4B	Mar-71			Solid	Radioactive		
TRU	RH	325B-71-0008S	Small metal cont.	0.018	13	218W4B	Mar-71			Solid	Radioactive		
TRU	RH	325B-71-0009S	Small metal cont.	0.018	13	218W4B	Nov-71			Solid	Radioactive		
TRU	RH	325B-71-0010S	Small metal cont.	0.018	13	218W4B	Nov-71			Solid	Radioactive		
TRU	RH	325B-71-0011S	Small metal cont.	0.018	13	218W4B	Nov-71			Solid	Radioactive		
TRU	RH	325B-71-0012S	Small metal cont.	0.018	13	218W4B	Nov-71			Solid	Radioactive		
TRU	RH	325B-71-0013S	Small metal cont.	0.018	13	218W4B	Nov-71			Solid	Radioactive		
TRU	RH	325B-71-0014S	Small metal cont.	0.018	13	218W4B	Nov-71			Solid	Radioactive		
TRU	RH	325B-71-0015S	Small metal cont.	0.018	13	218W4B	Nov-71			Solid	Radioactive		
TRU	RH	325B-71-0016S	Small metal cont.	0.018	13	218W4B	Nov-71			Solid	Radioactive		
TRU	RH	325B-72-0001S	Small metal cont.	0.018	13	218W4B	Oct-72			Solid	Radioactive		
TRU	RH	325B-72-0002S	Small metal cont.	0.018	13	218W4B	Oct-72			Solid	Radioactive		
TRU	RH	325B-72-0003S	Small metal cont.	0.018	13	218W4B	Oct-72			Solid	Radioactive		
TRU	RH	325B-72-0004S	Small metal cont.	0.018	13	218W4B	Oct-72			Solid	Radioactive		
TRU	RH	325B-72-0005S	Small metal cont.	0.018	13	218W4B	Oct-72		20	Solid	Radioactive		
TRU	RH	325B-72-0006S	Small metal cont.	0.018	13	218W4B	Oct-72			Solid	Radioactive		
TRU	RH	325B-72-0007S	Small metal cont.	0.011	8	218W4B	Dec-72			Solid	Radioactive		
TRU	RH	325B-72-0008S	Equipment	0.006	4	218W4B	Dec-72			Solid	Radioactive		
TRU	RH	325B-72-0009S	Small metal cont.	0.018	13	218W4B	Dec-72			Solid	Radioactive		
TRU	RH	325B-72-0010S	Small metal cont.	0.018	13	218W4B	Dec-72			Solid	Radioactive		
TRU	RH	325B-72-0011S	Small metal cont.	0.018	13	218W4B	Dec-72			Solid	Radioactive		
TRU	RH	325B-73-0001S	Small metal cont.	0.018	13	218W4B	Jan-73			Solid	Radioactive		
TRU	RH	325B-73-0002S	Small metal cont.	0.018	13	218W4B	Apr-73			Solid	Radioactive		
TRU	RH	325B-73-0003S	Small metal cont.	0.018	13	218W4B	Apr-73			Solid	Radioactive		
TRU	RH	325B-73-0004S	Small metal cont.	0.018	13	218W4B	Apr-73		2	Solid	Radioactive		
TRU	RH	325B-73-0005S	Small metal cont.	0.018	13	218W4B	Apr-73			Solid	Radioactive		
TRU	RH	325B-73-0006S	Small metal cont.	0.018	13	218W4B	May-73			Solid	Radioactive		
TRU	RH	325B-73-0007S	Small metal cont.	0.018	13	218W4B	May-73		10	Solid	Radioactive		
TRU	RH	325B-73-0008S	Small metal cont.	0.018	13	218W4B	May-73		10	Solid	Radioactive		
TRU	RH	325B-73-0009S	Small metal cont.	0.018	13	218W4B	May-73		35	Solid	Radioactive		

Group	Handling(P)	Package ID	Container	Contain. volume	Gross weight	Storage facility	Date into TSD	Alpha Ci, total	Bet/Ga dose rate	Matrix	Contamination	DW codes	PCB ppm
TRU	RH	325B-73-0010S	Small metal cont.	0.018	13	218W4B	May-73		10	Solid	Radioactive		
TRU	RH	325B-73-0011S	Small metal cont.	0.018	13	218W4B	May-73		10	Solid	Radioactive		
TRU	RH	325B-76-0001S	Small metal cont.	0.011	8	218W4B	Jun-76		1	Solid	Radioactive		
TRU	RH	325B-76-0002S	Small metal cont.	0.011	8	218W4B	Sep-76			Solid	Radioactive		
TRU	RH	325B-76-0003S	Small metal cont.	0.008	6	218W4B	Sep-76		40	Solid	Radioactive		
TRU	RH	325B-76-0004S	Small metal cont.	0.011	8	218W4B	Sep-76		350	Solid	Radioactive		
TRU	RH	325B-77-0001S	Small metal cont.	0.015	11	218W4B	Apr-77		30	Solid	Radioactive		
TRU	RH	325B-77-0002S	Small metal cont.	0.017	12	218W4B	Apr-77		15	Solid	Radioactive		
TRU	RH	325B-77-0003S	Small metal cont.	0.011	8	218W4B	Apr-77		400	Solid	Radioactive		
TRU	RH	325B-77-0004S	Small metal cont.	0.018	25	218W4B	Sep-77			Solid	Radioactive		
TRU	RH	325B-77-0005S	Small metal cont.	0.018	25	218W4B	Sep-77			Solid	Radioactive		
TRU	RH	325B-78-0001S	Small metal cont.	0.021	14	218W4B	Feb-78			Solid	Radioactive		
TRU	RH	325B-78-0002S	Small metal cont.	0.021	14	218W4B	Mar-78			Solid	Radioactive		
TRU	RH	325B-78-0003S	Small metal cont.	0.021	14	218W4B	Mar-78			Solid	Radioactive		
TRU	RH	325B-78-0004S	Small metal cont.	0.020	14	218W4B	Mar-78			Solid	Radioactive		
TRU	RH	325B-78-0005S	Small metal cont.	0.018	13	218W4B	Aug-78		20	Solid	Radioactive		
TRU	RH	325B-79-0001S	Small metal cont.	0.018	13	218W4B	Mar-79		700	Solid	Radioactive		
TRU	RH	325B-79-0002S	Small metal cont.	0.012	9	218W4B	Aug-79		100	Solid	Radioactive		
TRU	RH	325B-79-0003S	Small metal cont.	0.009	5	218W4B	Aug-79		35	Solid	Radioactive		
TRU	RH	325B-79-0004S	Small metal cont.	0.022	10	218W4B	Sep-79		100	Solid	Radioactive		
TRU	RH	325B-79-0005S	Small metal cont.	0.022	10	218W4B	Sep-79		150	Solid	Radioactive		
TRU	RH	325B-79-0006S	Small metal cont.	0.022	10	218W4B	Sep-79		700	Solid	Radioactive		
TRU	RH	325B-79-0007S	Small metal cont.	0.020	9	218W4B	Sep-79		80	Solid	Radioactive		
TRU	RH	325B-79-0008S	Small metal cont.	0.012	5	218W4B	Sep-79		1,000	Solid	Radioactive		
TRU	RH	325B-79-0009S	Small metal cont.	0.010	5	218W4B	Sep-79		700	Solid	Radioactive		
TRU	RH	325B-79-0010S	Small metal cont.	0.010	5	218W4B	Sep-79		700	Solid	Radioactive		
TRU	RH	325B-80-0001S	Small metal cont.	0.010	5	218W4B	Sep-80		220	Solid	Radioactive		
TRU	RH	325B-80-0002S	Small metal cont.	0.011	5	218W4B	Sep-80		60	Solid	Radioactive		
TRU	RH	325B-80-0003S	Small metal cont.	0.010	5	218W4B	Sep-80		150	Solid	Radioactive		
TRU	RH	325B-80-0005S	Small metal cont.	0.010	3	218W4B	Sep-80		25	Solid	Radioactive		
TRU	RH	325B-80-0006S	Small metal cont.	0.010	4	218W4B	Sep-80		50	Solid	Radioactive		
TRU	RH	325B-80-0007S	Small metal cont.	0.010	4	218W4B	Sep-80		150	Solid	Radioactive		
TRU	RH	325B-80-0009S	Small metal cont.	0.010	5	218W4B	Sep-80		20	Solid	Radioactive		
TRU	RH	325B-80-0012S	Small metal cont.	0.010	4	218W4B	Nov-80		150	Solid	Radioactive		
TRU	RH	325B-81-0001S	Small metal cont.	0.010	4	218W4B	Jun-81			Solid	Radioactive		
TRU	RH	325B-81-0002S	Small metal cont.	0.010	3	218W4B	Jun-81			Solid	Radioactive		
TRU	RH	325B-81-0003S	Small metal cont.	0.010	3	218W4B	Jul-81		25	Solid	Radioactive		
TRU	RH	325B-81-0004S	Small metal cont.	0.011	4	218W4B	Jul-81		110	Solid	Radioactive		
TRU	RH	325B-81-0005S	Small metal cont.	0.010	4	218W4B	Jul-81		300	Solid	Radioactive		
TRU	RH	325B-81-0006S	Small metal cont.	0.010	4	218W4B	Jul-81		450	Solid	Radioactive		
TRU	RH	325B-83-0001S	Small metal cont.	0.010	5	218W4B	Feb-83			Solid	Radioactive		
TRU	RH	325B-83-0002S	Small metal cont.	0.010	4	218W4B	May-83		150	Solid	Radioactive		

Group	Handling(P)	Package ID	Container	Contain. volume	Gross weight	Storage facility	Date into TSD	Alpha Ci, total	Bet/Ga dose rate	Matrix	Contamination	DW codes	PCB ppm
TRU	RH	325B-83-0003S	Small metal cont.	0.011	4	218W4B	May-83		150	Solid	Radioactive		
TRU	RH	325B-83-0004S	Small metal cont.	0.011	5	218W4B	May-83		150	Solid	Radioactive		
TRU	RH	325B-83-0009S	Small metal cont.	0.010	4	218W4B	Jun-83		150	Solid	Radioactive		
TRU	RH	325B-83-0010S	Small metal cont.	0.010	4	218W4B	Jun-83		150	Solid	Radioactive		
TRU	RH	325B-83-0011S	Small metal cont.	0.010	5	218W4B	Jun-83		150	Solid	Radioactive		
TRU	RH	325B-83-0012S	Small metal cont.	0.010	5	218W4B	Jun-83		150	Solid	Radioactive		
TRU	RH	325B-84-0001S	Small metal cont.	0.009	5	218W4B	Mar-84		20	Solid	Radioactive		
TRU	RH	325B-84-0002S	Small metal cont.	0.010	5	218W4B	Mar-84		20	Solid	Radioactive		
TRU	RH	325B-84-0003S	Small metal cont.	0.011	5	218W4B	Mar-84		20	Solid	Radioactive		
TRU	RH	325B-84-0004S	Small metal cont.	0.008	5	218W4B	Apr-84		10	Solid	Radioactive		
TRU	RH	325B-85-0001S	Small metal cont.	0.010	5	218W4B	May-85		100	Solid	Radioactive		
TRU	RH	327C-70-0044S	Small metal cont.	0.031	22	218W4B	Jun-70		5	Solid	Radioactive		
TRU	RH	327C-70-0046S	Small metal cont.	0.031	22	218W4B	Jun-70		5	Solid	Radioactive		
TRU	RH	327C-70-0047S	Small metal cont.	0.031	22	218W4B	Jun-70		2,000	Solid	Radioactive		
TRU	RH	327C-70-0049S	Small metal cont.	0.031	22	218W4B	Jun-70		470	Solid	Radioactive		
TRU	RH	327C-70-0050S	Small metal cont.	0.031	22	218W4B	Jul-70		100	Solid	Radioactive		
TRU	RH	327C-70-0051S	Small metal cont.	0.031	22	218W4B	Jul-70		1,000	Solid	Radioactive		
TRU	RH	327C-70-0052S	Small metal cont.	0.031	22	218W4B	Jul-70		10	Solid	Radioactive		
TRU	RH	327C-70-0053S	Small metal cont.	0.031	22	218W4B	Jul-70		5	Solid	Radioactive		
TRU	RH	327C-70-0055S	Small metal cont.	0.031	22	218W4B	Jul-70		5	Solid	Radioactive		
TRU	RH	327C-70-0056S	Small metal cont.	0.031	22	218W4B	Aug-70		3	Solid	Radioactive		
TRU	RH	327C-70-0058S	Small metal cont.	0.031	22	218W4B	Aug-70		5	Solid	Radioactive		
TRU	RH	327C-70-0059S	Small metal cont.	0.016	11	218W4B	Aug-70		10	Solid	Radioactive		
TRU	RH	327C-70-0060S	Misc. scrap	0.013	9	218W4B	Aug-70		10	Solid	Radioactive		
TRU	RH	327C-70-0062S	Small metal cont.	0.031	22	218W4B	Sep-70		10	Solid	Radioactive		
TRU	RH	327C-70-0063S	Small metal cont.	0.023	16	218W4B	Sep-70		10	Solid	Radioactive		
TRU	RH	327C-70-0064S	Misc. scrap	0.005	5	218W4B	Sep-70		80	Solid	Radioactive		
TRU	RH	327C-70-0067S	Small metal cont.	0.031	22	218W4B	Sep-70		50	Solid	Radioactive		
TRU	RH	327C-70-0068S	Small metal cont.	0.031	22	218W4B	Sep-70		10	Solid	Radioactive		
TRU	RH	327C-70-0069S	Small metal cont.	0.031	22	218W4B	Sep-70		6	Solid	Radioactive		
TRU	RH	327C-70-0071S	Small metal cont.	0.031	22	218W4B	Oct-70		6	Solid	Radioactive		
TRU	RH	327C-70-0072S	Small metal cont.	0.031	22	218W4B	Oct-70		10	Solid	Radioactive		
TRU	RH	327C-70-0073S	Small metal cont.	0.031	22	218W4B	Oct-70		6	Solid	Radioactive		
TRU	RH	327C-70-0074S	Small metal cont.	0.031	22	218W4B	Oct-70		6	Solid	Radioactive		
TRU	RH	327C-70-0076S	Small metal cont.	0.031	22	218W4B	Nov-70		120	Solid	Radioactive		
TRU	RH	327C-70-0077S	Small metal cont.	0.031	22	218W4B	Nov-70		600	Solid	Radioactive		
TRU	RH	327C-70-0079S	Small metal cont.	0.023	16	218W4B	Dec-70		30	Solid	Radioactive		
TRU	RH	327C-70-0080S	Misc. scrap	0.005	3	218W4B	Dec-70		30	Solid	Radioactive		
TRU	RH	327C-70-0082S	Small metal cont.	0.031	22	218W4B	Dec-70		30	Solid	Radioactive		
TRU	RH	327C-71-0002S	Small metal cont.	0.031	22	218W4B	Jan-71		15	Solid	Radioactive		
TRU	RH	327C-71-0003S	Small metal cont.	0.031	22	218W4B	Jan-71		5	Solid	Radioactive		
TRU	RH	327C-71-0004S	Small metal cont.	0.024	16	218W4B	Jan-71		10	Solid	Radioactive		

Group	Handling(P)	Package ID	Container	Contain. volume	Gross weight	Storage facility	Date into TSD	Alpha Ci, total	Bet/Ga dose rate	Matrix	Contamination	DW codes	PCB ppm
TRU	RH	327C-71-0005S	Misc. scrap	0.004	3	218W4B	Jan-71		10	Solid	Radioactive		
TRU	RH	327C-71-0008S	Small metal cont.	0.024	16	218W4B	Feb-71		10	Solid	Radioactive		
TRU	RH	327C-71-0009S	Misc. scrap	0.004	3	218W4B	Feb-71		10	Solid	Radioactive		
TRU	RH	327C-71-0010S	Small metal cont.	0.024	16	218W4B	Feb-71		3	Solid	Radioactive		
TRU	RH	327C-71-0011S	Misc. scrap	0.004	3	218W4B	Feb-71		3	Solid	Radioactive		
TRU	RH	327C-71-0012S	Small metal cont.	0.031	22	218W4B	Feb-71		10	Solid	Radioactive		
TRU	RH	327C-71-0014S	Small metal cont.	0.031	22	218W4B	Mar-71		6	Solid	Radioactive		
TRU	RH	327C-71-0016S	Small metal cont.	0.031	22	218W4B	Mar-71		6	Solid	Radioactive		
TRU	RH	327C-71-0017S	Small metal cont.	0.031	20	218W4B	Apr-71		6	Solid	Radioactive		
TRU	RH	327C-71-0021S	Small metal cont.	0.031	20	218W4B	Apr-71		5	Solid	Radioactive		
TRU	RH	327C-71-0022S	Small metal cont.	0.031	20	218W4B	Apr-71		30	Solid	Radioactive		
TRU	RH	327C-71-0023S	Small metal cont.	0.023	16	218W4B	May-71		1	Solid	Radioactive		
TRU	RH	327C-71-0025S	Small metal cont.	0.031	20	218W4B	May-71		5	Solid	Radioactive		
TRU	RH	327C-71-0026S	Small metal cont.	0.031	20	218W4B	May-71		6	Solid	Radioactive		
TRU	RH	327C-71-0027S	Small metal cont.	0.031	20	218W4B	May-71		6	Solid	Radioactive		
TRU	RH	327C-71-0028S	Small metal cont.	0.031	20	218W4B	Jun-71		5	Solid	Radioactive		
TRU	RH	327C-71-0031S	Small metal cont.	0.031	20	218W4B	Jun-71		6	Solid	Radioactive		
TRU	RH	327C-71-0032S	Small metal cont.	0.031	20	218W4B	Jun-71		6	Solid	Radioactive		
TRU	RH	327C-71-0034S	Small metal cont.	0.028	20	218W4B	Jun-71		5	Solid	Radioactive		
TRU	RH	327C-71-0035S	Small metal cont.	0.016	11	218W4B	Jun-71		10	Solid	Radioactive		
TRU	RH	327C-71-0036S	Misc. scrap	0.016	11	218W4B	Jun-71		10	Solid	Radioactive		
TRU	RH	327C-71-0037S	Small metal cont.	0.031	22	218W4B	Jun-71		5	Solid	Radioactive		
TRU	RH	327C-71-0038S	Small metal cont.	0.027	19	218W4B	Jun-71		10	Solid	Radioactive		
TRU	RH	327C-71-0039S	Misc. scrap	0.001	1	218W4B	Jun-71		10	Solid	Radioactive		
TRU	RH	327C-71-0040S	Small metal cont.	0.031	22	218W4B	Jun-71		6	Solid	Radioactive		
TRU	RH	327C-71-0041S	Small metal cont.	0.031	22	218W4B	Jul-71		6	Solid	Radioactive		
TRU	RH	327C-71-0044S	Small metal cont.	0.019	14	218W4B	Jul-71		120	Solid	Radioactive		
TRU	RH	327C-71-0045S	Metal drum	0.009	6	218W4B	Jul-71			Solid	Radioactive		
TRU	RH	327C-71-0046S	Small metal cont.	0.031	22	218W4B	Aug-71		6	Solid	Radioactive		
TRU	RH	327C-71-0047S	Small metal cont.	0.031	22	218W4B	Aug-71		6	Solid	Radioactive		
TRU	RH	327C-71-0048S	Small metal cont.	0.031	22	218W4B	Aug-71		15	Solid	Radioactive		
TRU	RH	327C-71-0049S	Small metal cont.	0.016	11	218W4B	Aug-71		6	Solid	Radioactive		
TRU	RH	327C-71-0050S	Metal drum	0.002	2	218W4B	Aug-71		6	Solid	Radioactive		
TRU	RH	327C-71-0051S	Small metal cont.	0.031	22	218W4B	Aug-71		60	Solid	Radioactive		
TRU	RH	327C-71-0053S	Small metal cont.	0.016	11	218W4B	Aug-71		90	Solid	Radioactive		
TRU	RH	327C-71-0054S	Metal drum	0.013	9	218W4B	Aug-71		90	Solid	Radioactive		
TRU	RH	327C-71-0055S	Small metal cont.	0.031	22	218W4B	Sep-71		6	Solid	Radioactive		
TRU	RH	327C-71-0056S	Small metal cont.	0.031	22	218W4B	Sep-71		20	Solid	Radioactive		
TRU	RH	327C-71-0061S	Small metal cont.	0.031	22	218W4B	Oct-71		5	Solid	Radioactive		
TRU	RH	327C-71-0063S	Small metal cont.	0.031	22	218W4B	Oct-71		5	Solid	Radioactive		
TRU	RH	327C-71-0064S	Small metal cont.	0.031	22	218W4B	Oct-71		150	Solid	Radioactive		
TRU	RH	327C-71-0071S	Small metal cont.	0.031	22	218W4B	Nov-71		5	Solid	Radioactive		

Group	Handling(P)	Package ID	Container	Contain. volume	Gross weight	Storage facility	Date into TSD	Alpha Ci, total	Bet/Ga dose rate	Matrix	Contamination	DW codes	PCB ppm
TRU	RH	327C-71-0073S	Small metal cont.	0.027	19	218W4B	Dec-71		5	Solid	Radioactive		
TRU	RH	327C-71-0074S	Metal drum	0.001	1	218W4B	Dec-71		5	Solid	Radioactive		
TRU	RH	327C-71-0075S	Small metal cont.	0.031	22	218W4B	Dec-71		5	Solid	Radioactive		
TRU	RH	327C-71-0076S	Small metal cont.	0.031	22	218W4B	Dec-71		25	Solid	Radioactive		
TRU	RH	327C-71-0078S	Small metal cont.	0.031	22	218W4B	Dec-71		5	Solid	Radioactive		
TRU	RH	327C-72-0002S	Metal drum	0.031	22	218W4B	Jan-72		5	Solid	Radioactive		
TRU	RH	327C-72-0003S	Small metal cont.	0.031	22	218W4B	Jan-72		5	Solid	Radioactive		
TRU	RH	327C-72-0004S	Small metal cont.	0.031	22	218W4B	Jan-72		5	Solid	Radioactive		
TRU	RH	327C-72-0005S	Small metal cont.	0.031	22	218W4B	Jan-72		5	Solid	Radioactive		
TRU	RH	327C-72-0007S	Small metal cont.	0.031	22	218W4B	Feb-72		10	Solid	Radioactive		
TRU	RH	327C-72-0008S	Small metal cont.	0.031	22	218W4B	Feb-72		10	Solid	Radioactive		
TRU	RH	327C-72-0009S	Small metal cont.	0.031	22	218W4B	Mar-72		5	Solid	Radioactive		
TRU	RH	327C-72-0010S	Small metal cont.	0.031	22	218W4B	Mar-72		20	Solid	Radioactive		
TRU	RH	327C-72-0011S	Small metal cont.	0.031	22	218W4B	Mar-72		20	Solid	Radioactive		
TRU	RH	327C-72-0012S	Small metal cont.	0.031	22	218W4B	Mar-72		5	Solid	Radioactive		
TRU	RH	327C-72-0015S	Small metal cont.	0.031	22	218W4B	Apr-72		5	Solid	Radioactive		
TRU	RH	327C-72-0016S	Small metal cont.	0.031	22	218W4B	Apr-72		5	Solid	Radioactive		
TRU	RH	327C-72-0017S	Small metal cont.	0.031	22	218W4B	May-72		5	Solid	Radioactive		
TRU	RH	327C-72-0018S	Small metal cont.	0.031	22	218W4B	May-72		5	Solid	Radioactive		
TRU	RH	327C-72-0020S	Small metal cont.	0.031	22	218W4B	May-72		5	Solid	Radioactive		
TRU	RH	327C-72-0021S	Small metal cont.	0.031	22	218W4B	May-72		5	Solid	Radioactive		
TRU	RH	327C-72-0023S	Small metal cont.	0.031	22	218W4B	May-72		5	Solid	Radioactive		
TRU	RH	327C-72-0024S	Small metal cont.	0.031	22	218W4B	May-72		5	Solid	Radioactive		
TRU	RH	327C-72-0025S	Small metal cont.	0.031	22	218W4B	Jun-72		20	Solid	Radioactive		
TRU	RH	327C-72-0026S	Small metal cont.	0.031	22	218W4B	Jun-72		10	Solid	Radioactive		
TRU	RH	327C-72-0027S	Small metal cont.	0.031	22	218W4B	Jun-72		5	Solid	Radioactive		
TRU	RH	327C-72-0028S	Small metal cont.	0.031	22	218W4B	Jun-72		5	Solid	Radioactive		
TRU	RH	327C-72-0030S	Small metal cont.	0.031	22	218W4B	Jun-72		5	Solid	Radioactive		
TRU	RH	327C-72-0032S	Small metal cont.	0.031	22	218W4B	Jul-72		5	Solid	Radioactive		
TRU	RH	327C-72-0033S	Small metal cont.	0.031	22	218W4B	Jul-72		5	Solid	Radioactive		
TRU	RH	327C-72-0035S	Small metal cont.	0.031	22	218W4B	Aug-72		5	Solid	Radioactive		
TRU	RH	327C-72-0036S	Small metal cont.	0.031	22	218W4B	Aug-72		5	Solid	Radioactive		
TRU	RH	327C-72-0037S	Small metal cont.	0.031	22	218W4B	Aug-72		10	Solid	Radioactive		
TRU	RH	327C-72-0038S	Small metal cont.	0.031	22	218W4B	Sep-72		5	Solid	Radioactive		
TRU	RH	327C-72-0039S	Small metal cont.	0.031	22	218W4B	Sep-72		5	Solid	Radioactive		
TRU	RH	327C-72-0041S	Small metal cont.	0.031	22	218W4B	Sep-72		5	Solid	Radioactive		
TRU	RH	327C-72-0042S	Small metal cont.	0.031	22	218W4B	Sep-72		5	Solid	Radioactive		
TRU	RH	327C-72-0043S	Small metal cont.	0.031	22	218W4B	Sep-72		5	Solid	Radioactive		
TRU	RH	327C-72-0044S	Small metal cont.	0.031	22	218W4B	Oct-72		5	Solid	Radioactive		
TRU	RH	327C-72-0046S	Small metal cont.	0.031	22	218W4B	Oct-72		5	Solid	Radioactive		
TRU	RH	327C-72-0047S	Small metal cont.	0.031	22	218W4B	Oct-72		5	Solid	Radioactive		
TRU	RH	327C-72-0048S	Small metal cont.	0.031	22	218W4B	Oct-72		5	Solid	Radioactive		

Group	Handling(P)	Package ID	Container	Contain. volume	Gross weight	Storage facility	Date into TSD	Alpha Ci, total	Bet/Ga dose rate	Matrix	Contamination	DW codes	PCB ppm
TRU	RH	327C-72-0049S	Small metal cont.	0.031	22	218W4B	Oct-72		5	Solid	Radioactive		
TRU	RH	327C-72-0051S	Small metal cont.	0.031	22	218W4B	Nov-72		5	Solid	Radioactive		
TRU	RH	327C-72-0052S	Small metal cont.	0.031	22	218W4B	Nov-72		5	Solid	Radioactive		
TRU	RH	327C-72-0053S	Small metal cont.	0.031	22	218W4B	Nov-72		5	Solid	Radioactive		
TRU	RH	327C-72-0054S	Small metal cont.	0.031	22	218W4B	Nov-72		5	Solid	Radioactive		
TRU	RH	327C-72-0056S	Small metal cont.	0.031	22	218W4B	Dec-72		5	Solid	Radioactive		
TRU	RH	327C-72-0057S	Small metal cont.	0.031	22	218W4B	Dec-72		5	Solid	Radioactive		
TRU	RH	327C-72-0058S	Small metal cont.	0.031	22	218W4B	Dec-72		5	Solid	Radioactive		
TRU	RH	327C-72-0059S	Small metal cont.	0.031	22	218W4B	Dec-72		5	Solid	Radioactive		
TRU	RH	327C-73-0004S	Small metal cont.	0.031	22	218W4B	Feb-73		30	Solid	Radioactive		
TRU	RH	327C-73-0005S	Small metal cont.	0.031	22	218W4B	Feb-73		5	Solid	Radioactive		
TRU	RH	327C-73-0006S	Small metal cont.	0.031	22	218W4B	Feb-73		5	Solid	Radioactive		
TRU	RH	327C-73-0007S	Small metal cont.	0.031	22	218W4B	Feb-73		5	Solid	Radioactive		
TRU	RH	327C-73-0008S	Small metal cont.	0.031	22	218W4B	Feb-73		5	Solid	Radioactive		
TRU	RH	327C-73-0009S	Small metal cont.	0.031	22	218W4B	Feb-73		5	Solid	Radioactive		
TRU	RH	327C-73-0010S	Small metal cont.	0.031	22	218W4B	Feb-73		5	Solid	Radioactive		
TRU	RH	327C-73-0011S	Small metal cont.	0.031	22	218W4B	Mar-73		150	Solid	Radioactive		
TRU	RH	327C-73-0013S	Small metal cont.	0.031	22	218W4B	Mar-73		10	Solid	Radioactive		
TRU	RH	327C-73-0014S	Small metal cont.	0.031	22	218W4B	Apr-73		10	Solid	Radioactive		
TRU	RH	327C-73-0015S	Small metal cont.	0.031	22	218W4B	Apr-73		10	Solid	Radioactive		
TRU	RH	327C-73-0016S	Small metal cont.	0.031	22	218W4B	May-73		150	Solid	Radioactive		
TRU	RH	327C-73-0017S	Small metal cont.	0.031	22	218W4B	May-73		10	Solid	Radioactive		
TRU	RH	327C-73-0019S	Small metal cont.	0.031	22	218W4B	May-73		5	Solid	Radioactive		
TRU	RH	327C-73-0020S	Small metal cont.	0.031	22	218W4B	May-73		5	Solid	Radioactive		
TRU	RH	327C-73-0021S	Small metal cont.	0.031	22	218W4B	May-73		5	Solid	Radioactive		
TRU	RH	327C-73-0022S	Small metal cont.	0.031	22	218W4B	Jun-73		30	Solid	Radioactive		
TRU	RH	327C-73-0023S	Small metal cont.	0.031	22	218W4B	Jun-73		10	Solid	Radioactive		
TRU	RH	327C-73-0024S	Small metal cont.	0.031	22	218W4B	Jun-73		50	Solid	Radioactive		
TRU	RH	327C-73-0025S	Small metal cont.	0.031	22	218W4B	Jun-73		20	Solid	Radioactive		
TRU	RH	327C-73-0026S	Small metal cont.	0.031	22	218W4B	Jun-73		200	Solid	Radioactive		
TRU	RH	327C-73-0027S	Small metal cont.	0.031	22	218W4B	Jun-73		5	Solid	Radioactive		
TRU	RH	327C-73-0028S	Small metal cont.	0.031	22	218W4B	Jun-73		5	Solid	Radioactive		
TRU	RH	327C-73-0030S	Small metal cont.	0.031	22	218W4B	Jul-73		5	Solid	Radioactive		
TRU	RH	327C-73-0031S	Small metal cont.	0.031	22	218W4B	Jul-73		5	Solid	Radioactive		
TRU	RH	327C-73-0032S	Small metal cont.	0.031	22	218W4B	Jul-73		20	Solid	Radioactive		
TRU	RH	327C-73-0033S	Small metal cont.	0.031	22	218W4B	Jul-73		5	Solid	Radioactive		
TRU	RH	327C-73-0034S	Small metal cont.	0.031	22	218W4B	Jul-73		5	Solid	Radioactive		
TRU	RH	327C-73-0035S	Small metal cont.	0.031	22	218W4B	Jul-73		5	Solid	Radioactive		
TRU	RH	327C-73-0036S	Small metal cont.	0.031	22	218W4B	Jul-73		5	Solid	Radioactive		
TRU	RH	327C-73-0037S	Small metal cont.	0.031	22	218W4B	Jul-73		5	Solid	Radioactive		
TRU	RH	327C-73-0038S	Small metal cont.	0.031	22	218W4B	Jul-73		5	Solid	Radioactive		
TRU	RH	327C-73-0039S	Small metal cont.	0.031	22	218W4B	Jul-73		5	Solid	Radioactive		

Group	Handling(P)	Package ID	Container	Contain. volume	Gross weight	Storage facility	Date into TSD	Alpha Ci, total	Bet/Ga dose rate	Matrix	Contamination	DW codes	PCB ppm
TRU	RH	327C-73-0040S	Small metal cont.	0.031	22	218W4B	Jul-73		35	Solid	Radioactive		
TRU	RH	327C-73-0043S	Small metal cont.	0.031	22	218W4B	Sep-73		25	Solid	Radioactive		
TRU	RH	327C-73-0044S	Small metal cont.	0.031	22	218W4B	Sep-73		5	Solid	Radioactive		
TRU	RH	327C-73-0045S	Small metal cont.	0.031	22	218W4B	Sep-73		5	Solid	Radioactive		
TRU	RH	327C-73-0046S	Small metal cont.	0.031	22	218W4B	Sep-73		5	Solid	Radioactive		
TRU	RH	327C-73-0047S	Small metal cont.	0.031	22	218W4B	Sep-73		5	Solid	Radioactive		
TRU	RH	327C-73-0048S	Small metal cont.	0.031	22	218W4B	Oct-73		20	Solid	Radioactive		
TRU	RH	327C-73-0049S	Small metal cont.	0.031	22	218W4B	Oct-73		15	Solid	Radioactive		
TRU	RH	327C-73-0051S	Small metal cont.	0.031	22	218W4B	Nov-73		5	Solid	Radioactive		
TRU	RH	327C-73-0052S	Small metal cont.	0.031	22	218W4B	Nov-73		5	Solid	Radioactive		
TRU	RH	327C-73-0053S	Small metal cont.	0.031	22	218W4B	Nov-73		5	Solid	Radioactive		
TRU	RH	327C-73-0054S	Small metal cont.	0.031	22	218W4B	Nov-73		5	Solid	Radioactive		
TRU	RH	327C-73-0055S	Small metal cont.	0.031	22	218W4B	Dec-73		100	Solid	Radioactive		
TRU	RH	327C-73-0056S	Small metal cont.	0.031	22	218W4B	Dec-73		5	Solid	Radioactive		
TRU	RH	327C-73-0057S	Small metal cont.	0.031	22	218W4B	Dec-73		8	Solid	Radioactive		
TRU	RH	327C-73-0058S	Small metal cont.	0.031	22	218W4B	Dec-73		5	Solid	Radioactive		
TRU	RH	327C-73-0059S	Small metal cont.	0.031	22	218W4B	Dec-73		10	Solid	Radioactive		
TRU	RH	327C-73-0060S	Small metal cont.	0.031	22	218W4B	Dec-73		10	Solid	Radioactive		
TRU	RH	327C-73-0061S	Small metal cont.	0.031	22	218W4B	Dec-73		10	Solid	Radioactive		
TRU	RH	327C-73-0062S	Small metal cont.	0.031	22	218W4B	Dec-73		5	Solid	Radioactive		
TRU	RH	327C-74-0001S	Small metal cont.	0.031	22	218W4B	Feb-74		5	Solid	Radioactive		
TRU	RH	327C-74-0002S	Small metal cont.	0.031	22	218W4B	Feb-74		5	Solid	Radioactive		
TRU	RH	327C-74-0003S	Small metal cont.	0.031	22	218W4B	Feb-74		5	Solid	Radioactive		
TRU	RH	327C-74-0004S	Small metal cont.	0.031	22	218W4B	Feb-74		5	Solid	Radioactive		
TRU	RH	327C-74-0005S	Small metal cont.	0.031	22	218W4B	Feb-74		5	Solid	Radioactive		
TRU	RH	327C-74-0006S	Small metal cont.	0.031	22	218W4B	Mar-74		5	Solid	Radioactive		
TRU	RH	327C-74-0007S	Small metal cont.	0.031	22	218W4B	Mar-74		5	Solid	Radioactive		
TRU	RH	327C-74-0008S	Small metal cont.	0.031	22	218W4B	Mar-74		5	Solid	Radioactive		
TRU	RH	327C-74-0009S	Small metal cont.	0.031	22	218W4B	Mar-74		10	Solid	Radioactive		
TRU	RH	327C-74-0011S	Small metal cont.	0.031	22	218W4B	Apr-74		10	Solid	Radioactive		
TRU	RH	327C-74-0012S	Small metal cont.	0.031	22	218W4B	Apr-74		2	Solid	Radioactive		
TRU	RH	327C-74-0013S	Small metal cont.	0.031	22	218W4B	May-74		6	Solid	Radioactive		
TRU	RH	327C-74-0014S	Small metal cont.	0.031	22	218W4B	May-74		200	Solid	Radioactive		
TRU	RH	327C-74-0015S	Small metal cont.	0.031	22	218W4B	May-74		6	Solid	Radioactive		
TRU	RH	327C-74-0016S	Small metal cont.	0.031	22	218W4B	May-74		10	Solid	Radioactive		
TRU	RH	327C-74-0017S	Small metal cont.	0.031	22	218W4B	May-74		40	Solid	Radioactive		
TRU	RH	327C-74-0018S	Small metal cont.	0.031	22	218W4B	May-74		6	Solid	Radioactive		
TRU	RH	327C-74-0019S	Small metal cont.	0.031	22	218W4B	May-74		5	Solid	Radioactive		
TRU	RH	327C-74-0020S	Small metal cont.	0.031	22	218W4B	May-74		5	Solid	Radioactive		
TRU	RH	327C-74-0021S	Small metal cont.	0.031	22	218W4B	Jun-74		10	Solid	Radioactive		
TRU	RH	327C-74-0022S	Small metal cont.	0.031	22	218W4B	Jun-74		100	Solid	Radioactive		
TRU	RH	327C-74-0023S	Small metal cont.	0.031	22	218W4B	Jun-74		2	Solid	Radioactive		

Group	Handling(P)	Package ID	Container	Contain. volume	Gross weight	Storage facility	Date into TSD	Alpha Ci, total	Bet/Ga dose rate	Matrix	Contamination	DW codes	PCB ppm
TRU	RH	327C-74-0024S	Small metal cont.	0.031	22	218W4B	Jun-74		6	Solid	Radioactive		
TRU	RH	327C-74-0025S	Small metal cont.	0.031	22	218W4B	Jun-74		100	Solid	Radioactive		
TRU	RH	327C-74-0026S	Small metal cont.	0.031	22	218W4B	Jun-74		5	Solid	Radioactive		
TRU	RH	327C-74-0027S	Small metal cont.	0.031	22	218W4B	Jul-74		5	Solid	Radioactive		
TRU	RH	327C-74-0028S	Small metal cont.	0.031	22	218W4B	Jul-74		5	Solid	Radioactive		
TRU	RH	327C-74-0029S	Small metal cont.	0.031	22	218W4B	Aug-74		10	Solid	Radioactive		
TRU	RH	327C-74-0030S	Small metal cont.	0.031	22	218W4B	Aug-74		5	Solid	Radioactive		
TRU	RH	327C-74-0031S	Small metal cont.	0.031	22	218W4B	Aug-74		5	Solid	Radioactive		
TRU	RH	327C-74-0032S	Small metal cont.	0.031	22	218W4B	Aug-74		5	Solid	Radioactive		
TRU	RH	327C-74-0033S	Small metal cont.	0.031	22	218W4B	Sep-74		5	Solid	Radioactive		
TRU	RH	327C-74-0034S	Small metal cont.	0.031	22	218W4B	Sep-74		5	Solid	Radioactive		
TRU	RH	327C-74-0035S	Small metal cont.	0.031	22	218W4B	Sep-74		5	Solid	Radioactive		
TRU	RH	327C-74-0036S	Small metal cont.	0.031	22	218W4B	Sep-74		5	Solid	Radioactive		
TRU	RH	327C-74-0037S	Small metal cont.	0.031	22	218W4B	Sep-74		5	Solid	Radioactive		
TRU	RH	327C-74-0038S	Small metal cont.	0.031	22	218W4B	Oct-74		5	Solid	Radioactive		
TRU	RH	327C-74-0039S	Small metal cont.	0.031	22	218W4B	Oct-74		5	Solid	Radioactive		
TRU	RH	327C-74-0040S	Small metal cont.	0.031	22	218W4B	Oct-74		30	Solid	Radioactive		
TRU	RH	327C-74-0041S	Small metal cont.	0.031	22	218W4B	Nov-74		10	Solid	Radioactive		
TRU	RH	327C-74-0042S	Small metal cont.	0.031	22	218W4B	Nov-74		10	Solid	Radioactive		
TRU	RH	327C-74-0043S	Small metal cont.	0.031	22	218W4B	Nov-74		5	Solid	Radioactive		
TRU	RH	327C-74-0044S	Small metal cont.	0.031	22	218W4B	Dec-74		5	Solid	Radioactive		
TRU	RH	327C-74-0045S	Small metal cont.	0.031	22	218W4B	Dec-74		5	Solid	Radioactive		
TRU	RH	327C-75-0001S	Misc. scrap	0.028	13	218W4B	Jan-75		5	Solid	Radioactive		
TRU	RH	327C-75-0002S	Small metal cont.	0.031	14	218W4B	Jan-75		5	Solid	Radioactive		
TRU	RH	327C-75-0003S	Small metal cont.	0.031	14	218W4B	Jan-75		5	Solid	Radioactive		
TRU	RH	327C-75-0004S	Small metal cont.	0.031	14	218W4B	Jan-75		5	Solid	Radioactive		
TRU	RH	327C-75-0005S	Small metal cont.	0.031	14	218W4B	Jan-75		5	Solid	Radioactive		
TRU	RH	327C-75-0006S	Small metal cont.	0.031	14	218W4B	Jan-75		5	Solid	Radioactive		
TRU	RH	327C-75-0007S	Small metal cont.	0.031	14	218W4B	Jan-75		10	Solid	Radioactive		
TRU	RH	327C-75-0008S	Small metal cont.	0.031	14	218W4B	Jan-75		5	Solid	Radioactive		
TRU	RH	327C-75-0009S	Small metal cont.	0.031	14	218W4B	Jan-75		5	Solid	Radioactive		
TRU	RH	327C-75-0010S	Small metal cont.	0.031	14	218W4B	Jan-75		5	Solid	Radioactive		
TRU	RH	327C-75-0011S	Small metal cont.	0.031	14	218W4B	Feb-75		5	Solid	Radioactive		
TRU	RH	327C-75-0012S	Small metal cont.	0.031	14	218W4B	Feb-75		5	Solid	Radioactive		
TRU	RH	327C-75-0013S	Small metal cont.	0.031	14	218W4B	Feb-75		5	Solid	Radioactive		
TRU	RH	327C-75-0014S	Small metal cont.	0.031	14	218W4B	Feb-75		5	Solid	Radioactive		
TRU	RH	327C-75-0015S	Small metal cont.	0.031	14	218W4B	Mar-75		5	Solid	Radioactive		
TRU	RH	327C-75-0016S	Small metal cont.	0.031	14	218W4B	Mar-75		5	Solid	Radioactive		
TRU	RH	327C-75-0017S	Small metal cont.	0.031	14	218W4B	Mar-75		5	Solid	Radioactive		
TRU	RH	327C-75-0018S	Small metal cont.	0.016	7	218W4B	Mar-75		-	Solid	Radioactive		
TRU	RH	327C-75-0019S	Misc. scrap	0.016	7	218W4B	Mar-75		15	Solid	Radioactive		
TRU	RH	327C-75-0020S	Small metal cont.	0.031	14	218W4B	Mar-75		5	Solid	Radioactive		

Group	Handling(P)	Package ID	Container	Contain. volume	Gross weight	Storage facility	Date into TSD	Alpha Ci, total	Bet/Ga dose rate	Matrix	Contamination	DW codes	PCB ppm
TRU	RH	327C-75-0021S	Small metal cont.	0.031	14	218W4B	Mar-75		5	Solid	Radioactive		
TRU	RH	327C-75-0022S	Small metal cont.	0.031	14	218W4B	Mar-75		10	Solid	Radioactive		
TRU	RH	327C-75-0023S	Small metal cont.	0.031	15	218W4B	Apr-75		5	Solid	Radioactive		
TRU	RH	327C-75-0024S	Small metal cont.	0.031	15	218W4B	Apr-75		5	Solid	Radioactive		
TRU	RH	327C-75-0025S	Small metal cont.	0.031	15	218W4B	Apr-75		5	Solid	Radioactive		
TRU	RH	327C-75-0026S	Small metal cont.	0.031	15	218W4B	Apr-75		5	Solid	Radioactive		
TRU	RH	327C-75-0027S	Small metal cont.	0.031	15	218W4B	May-75			Solid	Radioactive		
TRU	RH	327C-75-0028S	Small metal cont.	0.031	15	218W4B	May-75		20	Solid	Radioactive		
TRU	RH	327C-75-0029S	Small metal cont.	0.031	15	218W4B	May-75		10	Solid	Radioactive		
TRU	RH	327C-75-0030S	Small metal cont.	0.031	15	218W4B	May-75		5	Solid	Radioactive		
TRU	RH	327C-75-0031S	Small metal cont.	0.031	15	218W4B	May-75		8	Solid	Radioactive		
TRU	RH	327C-75-0032S	Small metal cont.	0.031	15	218W4B	Jun-75		10	Solid	Radioactive		
TRU	RH	327C-75-0033S	Small metal cont.	0.031	15	218W4B	Jun-75		5	Solid	Radioactive		
TRU	RH	327C-75-0034S	Small metal cont.	0.031	15	218W4B	Jun-75		2	Solid	Radioactive		
TRU	RH	327C-75-0035S	Small metal cont.	0.031	15	218W4B	Jun-75		10	Solid	Radioactive		
TRU	RH	327C-75-0036S	Misc. scrap	0.028	13	218W4B	Jun-75		5	Solid	Radioactive		
TRU	RH	327C-75-0037S	Small metal cont.	0.031	15	218W4B	Jun-75		5	Solid	Radioactive		
TRU	RH	327C-75-0038S	Small metal cont.	0.031	15	218W4B	Jun-75		30	Solid	Radioactive		
TRU	RH	327C-75-0039S	Small metal cont.	0.031	14	218W4B	Jul-75		5	Solid	Radioactive		
TRU	RH	327C-75-0040S	Small metal cont.	0.031	14	218W4B	Jul-75		5	Solid	Radioactive		
TRU	RH	327C-75-0041S	Small metal cont.	0.031	14	218W4B	Jul-75		5	Solid	Radioactive		
TRU	RH	327C-75-0042S	Small metal cont.	0.031	14	218W4B	Jul-75		5	Solid	Radioactive		
TRU	RH	327C-75-0043S	Small metal cont.	0.031	14	218W4B	Jul-75		5	Solid	Radioactive		
TRU	RH	327C-75-0044S	Small metal cont.	0.031	14	218W4B	Jul-75		5	Solid	Radioactive		
TRU	RH	327C-75-0045S	Small metal cont.	0.031	14	218W4B	Aug-75		5	Solid	Radioactive		
TRU	RH	327C-75-0046S	Small metal cont.	0.031	14	218W4B	Aug-75		5	Solid	Radioactive		
TRU	RH	327C-75-0047S	Small metal cont.	0.031	14	218W4B	Aug-75		5	Solid	Radioactive		
TRU	RH	327C-75-0048S	Small metal cont.	0.031	14	218W4B	Aug-75		7	Solid	Radioactive		
TRU	RH	327C-75-0049S	Small metal cont.	0.031	14	218W4B	Sep-75		35	Solid	Radioactive		
TRU	RH	327C-75-0050S	Small metal cont.	0.031	14	218W4B	Sep-75		30	Solid	Radioactive		
TRU	RH	327C-75-0051S	Small metal cont.	0.031	14	218W4B	Sep-75		5	Solid	Radioactive		
TRU	RH	327C-75-0052S	Small metal cont.	0.031	14	218W4B	Sep-75		5	Solid	Radioactive		
TRU	RH	327C-75-0053S	Small metal cont.	0.031	14	218W4B	Sep-75		5	Solid	Radioactive		
TRU	RH	327C-75-0054S	Small metal cont.	0.031	14	218W4B	Sep-75		5	Solid	Radioactive		
TRU	RH	327C-75-0055S	Small metal cont.	0.031	14	218W4B	Sep-75		5	Solid	Radioactive		
TRU	RH	327C-75-0056S	Small metal cont.	0.031	14	218W4B	Sep-75		25	Solid	Radioactive		
TRU	RH	327C-75-0057S	Small metal cont.	0.031	22	218W4B	Oct-75		5	Solid	Radioactive		
TRU	RH	327C-75-0058S	Small metal cont.	0.031	22	218W4B	Oct-75		5	Solid	Radioactive		
TRU	RH	327C-75-0059S	Small metal cont.	0.031	22	218W4B	Oct-75		35	Solid	Radioactive		
TRU	RH	327C-75-0060S	Small metal cont.	0.031	22	218W4B	Oct-75		15	Solid	Radioactive		
TRU	RH	327C-75-0061S	Small metal cont.	0.031	22	218W4B	Oct-75		5	Solid	Radioactive		
TRU	RH.	327C-75-0062S	Small metal cont.	0.031	22	218W4B	Oct-75		6	Solid	Radioactive		

Group	Handling(P)	Package ID	Container	Contain. volume	Gross weight	Storage facility	Date into TSD	Alpha Ci, total	Bet/Ga dose rate	Matrix	Contamination	DW codes	PCB ppm
TRU	RH	327C-75-0063S	Small metal cont.	0.031	22	218W4B	Oct-75		5	Solid	Radioactive		
TRU	RH	327C-75-0064S	Small metal cont.	0.031	22	218W4B	Nov-75		10	Solid	Radioactive		
TRU	RH	327C-75-0065S	Small metal cont.	0.031	22	218W4B	Nov-75		10	Solid	Radioactive		
TRU	RH	327C-75-0066S	Small metal cont.	0.031	22	218W4B	Nov-75		5	Solid	Radioactive		
TRU	RH	327C-75-0067S	Small metal cont.	0.031	22	218W4B	Nov-75		5	Solid	Radioactive		
TRU	RH	327C-75-0068S	Small metal cont.	0.031	22	218W4B	Dec-75		5	Solid	Radioactive		
TRU	RH	327C-75-0069S	Small metal cont.	0.031	22	218W4B	Dec-75		5	Solid	Radioactive		
TRU	RH	327C-75-0070S	Small metal cont.	0.031	22	218W4B	Dec-75		2	Solid	Radioactive		
TRU	RH	327C-76-0001S	Small metal cont.	0.031	22	218W4B	Jan-76		50	Solid	Radioactive		
TRU	RH	327C-76-0002S	Small metal cont.	0.031	22	218W4B	Mar-76		5	Solid	Radioactive		
TRU	RH	327C-76-0003S	Small metal cont.	0.031	22	218W4B	Mar-76		10	Solid	Radioactive		
TRU	RH	327C-76-0004S	Small metal cont.	0.031	22	218W4B	Mar-76		1	Solid	Radioactive		
TRU	RH	327C-76-0005S	Small metal cont.	0.031	22	218W4B	Mar-76		5	Solid	Radioactive		
TRU	RH	327C-76-0006S	Small metal cont.	0.031	22	218W4B	Mar-76		5	Solid	Radioactive		
TRU	RH	327C-76-0007S	Small metal cont.	0.031	22	218W4B	Mar-76		150	Solid	Radioactive		
TRU	RH	327C-76-0008S	Small metal cont.	0.031	22	218W4B	Mar-76		10	Solid	Radioactive		
TRU	RH	327C-76-0009S	Small metal cont.	0.031	22	218W4B	Mar-76		5	Solid	Radioactive		
TRU	RH	327C-76-0010S	Small metal cont.	0.031	22	218W4B	Apr-76		5	Solid	Radioactive		
TRU	RH	327C-76-0011S	Small metal cont.	0.031	22	218W4B	Apr-76		5	Solid	Radioactive		
TRU	RH	327C-76-0012S	Small metal cont.	0.031	22	218W4B	Apr-76		5	Solid	Radioactive		
TRU	RH	327C-76-0013S	Small metal cont.	0.031	22	218W4B	Apr-76		5	Solid	Radioactive		
TRU	RH	327C-76-0014S	Small metal cont.	0.031	22	218W4B	May-76		5	Solid	Radioactive		
TRU	RH	327C-76-0015S	Small metal cont.	0.031	22	218W4B	Jun-76		5	Solid	Radioactive		
TRU	RH	327C-76-0016S	Small metal cont.	0.031	22	218W4B	Jun-76		5	Solid	Radioactive		
TRU	RH	327C-76-0017S	Small metal cont.	0.031	22	218W4B	Jun-76		5	Solid	Radioactive		
TRU	RH	327C-76-0018S	Small metal cont.	0.031	22	218W4B	Jun-76		5	Solid	Radioactive		
TRU	RH	327C-76-0019S	Small metal cont.	0.031	22	218W4B	Jun-76		5	Solid	Radioactive		
TRU	RH	327C-76-0020S	Small metal cont.	0.031	22	218W4B	Jun-76		5	Solid	Radioactive		
TRU	RH	327C-76-0021S	Small metal cont.	0.031	22	218W4B	Jun-76		5	Solid	Radioactive		
TRU	RH	327C-76-0022S	Small metal cont.	0.031	22	218W4B	Jun-76		5	Solid	Radioactive		
TRU	RH	327C-76-0023S	Small metal cont.	0.031	22	218W4B	Aug-76		100	Solid	Radioactive		
TRU	RH	327C-76-0024S	Small metal cont.	0.031	22	218W4B	Aug-76		100	Solid	Radioactive		
TRU	RH	327C-76-0025S	Small metal cont.	0.031	22	218W4B	Aug-76			Solid	Radioactive		
TRU	RH	327C-76-0026S	Small metal cont.	0.031	22	218W4B	Aug-76			Solid	Radioactive		
TRU	RH	327C-76-0027S	Small metal cont.	0.031	22	218W4B	Aug-76			Solid	Radioactive		
TRU	RH	327C-76-0028S	Small metal cont.	0.031	22	218W4B	Aug-76			Solid	Radioactive		
TRU	RH	327C-76-0029S	Small metal cont.	0.031	22	218W4B	Sep-76		20	Solid	Radioactive		
TRU	RH	327C-76-0030S	Small metal cont.	0.031	22	218W4B	Sep-76		40	Solid	Radioactive		
TRU	RH	327C-76-0031S	Small metal cont.	0.031	22	218W4B	Sep-76		5	Solid	Radioactive		
TRU	RH	327C-76-0032S	Small metal cont.	0.002	5	218W4B	Sep-76		50	Solid	Radioactive		
TRU	RH	327C-76-0033S	Small metal cont.	0.031	22	218W4B	Sep-76		1	Solid	Radioactive		
TRU	RH	327C-76-0034S	Small metal cont.	0.031	22	218W4B	Sep-76		25	Solid	Radioactive		

Group	Handling(P)	Package ID	Container	Contain. volume	Gross weight	Storage facility	Date into TSD	Alpha Ci, total	Bet/Ga dose rate	Matrix	Contamination	DW codes	PCB ppm
TRU	RH	327C-76-0035S	Small metal cont.	0.031	22	218W4B	Sep-76		2	Solid	Radioactive		
TRU	RH	327C-76-0036S	Small metal cont.	0.031	22	218W4B	Sep-76		10	Solid	Radioactive		
TRU	RH	327C-76-0037S	Small metal cont.	0.031	22	218W4B	Sep-76			Solid	Radioactive		
TRU	RH	327C-76-0038S	Small metal cont.	0.031	22	218W4B	Sep-76		10	Solid	Radioactive		
TRU	RH	327C-76-0039S	Small metal cont.	0.031	22	218W4B	Sep-76		50	Solid	Radioactive		
TRU	RH	327C-76-0040S	Small metal cont.	0.031	22	218W4B	Sep-76		40	Solid	Radioactive		
TRU	RH	327C-76-0041S	Small metal cont.	0.031	22	218W4B	Oct-76		10	Solid	Radioactive		
TRU	RH	327C-76-0042S	Small metal cont.	0.031	22	218W4B	Oct-76		25	Solid	Radioactive		
TRU	RH	327C-76-0043S	Small metal cont.	0.031	22	218W4B	Oct-76		5	Solid	Radioactive		
TRU	RH	327C-76-0044S	Small metal cont.	0.031	22	218W4B	Oct-76		5	Solid	Radioactive		
TRU	RH	327C-76-0045S	Small metal cont.	0.004	2	218W4B	Nov-76		5	Solid	Radioactive		
TRU	RH	327C-76-0046S	Equipment	0.027	12	218W4B	Nov-76		5	Solid	Radioactive		
TRU	RH	327C-76-0047S	Small metal cont.	0.020	9	218W4B	Nov-76		5	Solid	Radioactive		
TRU	RH	327C-76-0048S	Equipment	0.011	5	218W4B	Nov-76		5	Solid	Radioactive		
TRU	RH	327C-76-0049S	Small metal cont.	0.031	22	218W4B	Nov-76		10	Solid	Radioactive		
TRU	RH	327C-76-0050S	Small metal cont.	0.031	22	218W4B	Nov-76		80	Solid	Radioactive		
TRU	RH	327C-76-0051S	Small metal cont.	0.031	22	218W4B	Dec-76		5	Solid	Radioactive		
TRU	RH	327C-76-0052S	Small metal cont.	0.031	22	218W4B	Dec-76		5	Solid	Radioactive		
TRU	RH	327C-76-0053S	Small metal cont.	0.031	22	218W4B	Dec-76		5	Solid	Radioactive		
TRU	RH	327C-76-0054S	Small metal cont.	0.031	22	218W4B	Dec-76		5	Solid	Radioactive		
TRU	RH	327C-76-0055S	Small metal cont.	0.031	22	218W4B	Dec-76		5	Solid	Radioactive		
TRU	RH	327C-76-0056S	Small metal cont.	0.031	22	218W4B	Dec-76		5	Solid	Radioactive		
TRU	RH	327C-77-0002S	Small metal cont.	0.031	22	218W4B	Jan-77		5	Solid	Radioactive		
TRU	RH	327C-77-0003S	Small metal cont.	0.031	22	218W4B	Jan-77		5	Solid	Radioactive		
TRU	RH	327C-77-0004S	Small metal cont.	0.031	22	218W4B	Jan-77		5	Solid	Radioactive		
TRU	RH	327C-77-0005S	Small metal cont.	0.031	22	218W4B	Jan-77		5	Solid	Radioactive		
TRU	RH	327C-77-0006S	Small metal cont.	0.031	22	218W4B	Jan-77		5	Solid	Radioactive		
TRU	RH	327C-77-0007S	Small metal cont.	0.031	22	218W4B	Jan-77		25	Solid	Radioactive		
TRU	RH	327C-77-0008S	Small metal cont.	0.031	22	218W4B	Jan-77		100	Solid	Radioactive		
TRU	RH	327C-77-0009S	Small metal cont.	0.031	22	218W4B	Feb-77		5	Solid	Radioactive		
TRU	RH	327C-77-0010S	Small metal cont.	0.031	22	218W4B	Feb-77		5	Solid	Radioactive		
TRU	RH	327C-77-0011S	Small metal cont.	0.031	22	218W4B	Feb-77		5	Solid	Radioactive		
TRU	RH	327C-77-0012S	Small metal cont.	0.031	22	218W4B	Feb-77		10	Solid	Radioactive		
TRU	RH	327C-77-0013S	Small metal cont.	0.031	22	218W4B	Feb-77		260	Solid	Radioactive		
TRU	RH	327C-77-0014S	Small metal cont.	0.031	22	218W4B	Feb-77		10	Solid	Radioactive		
TRU	RH	327C-77-0015S	Small metal cont.	0.031	22	218W4B	Feb-77		20	Solid	Radioactive		
TRU	RH	327C-77-0016S	Small metal cont.	0.031	22	218W4B	Mar-77		5	Solid	Radioactive		
TRU	RH	327C-77-0017S	Small metal cont.	0.031	22	218W4B	Mar-77		5	Solid	Radioactive		
TRU	RH	327C-77-0018S	Small metal cont.	0.031	22	218W4B	Mar-77		5	Solid	Radioactive		
TRU	RH	327C-77-0019S	Small metal cont.	0.031	22	218W4B	Mar-77		5	Solid	Radioactive		
TRU	RH	327C-77-0020S	Small metal cont.	0.031	22	218W4B	Mar-77		5	Solid	Radioactive		
TRU	RH	327C-77-0021S	Small metal cont.	0.031	22	218W4B	Mar-77		5	Solid	Radioactive		

Group	Handling(P)	Package ID	Container	Contain. volume	Gross weight	Storage facility	Date into TSD	Alpha Ci, total	Bet/Ga dose rate	Matrix	Contamination	DW codes	PCB ppm
TRU	RH	327C-77-0022S	Small metal cont.	0.031	22	218W4B	Apr-77		20	Solid	Radioactive		
TRU	RH	327C-77-0023S	Small metal cont.	0.031	22	218W4B	Apr-77		25	Solid	Radioactive		
TRU	RH	327C-77-0024S	Small metal cont.	0.031	22	218W4B	Apr-77		170	Solid	Radioactive		
TRU	RH	327C-77-0025S	Small metal cont.	0.031	22	218W4B	Apr-77		5	Solid	Radioactive		
TRU	RH	327C-77-0026S	Small metal cont.	0.031	22	218W4B	Apr-77		5	Solid	Radioactive		
TRU	RH	327C-77-0027S	Small metal cont.	0.031	22	218W4B	Apr-77		150	Solid	Radioactive		
TRU	RH	327C-77-0028S	Small metal cont.	0.031	22	218W4B	Apr-77		170	Solid	Radioactive		
TRU	RH	327C-77-0029S	Small metal cont.	0.031	22	218W4B	Apr-77		5	Solid	Radioactive		
TRU	RH	327C-77-0030S	Small metal cont.	0.031	22	218W4B	May-77		5	Solid	Radioactive		
TRU	RH	327C-77-0031S	Small metal cont.	0.031	22	218W4B	May-77		5	Solid	Radioactive		
TRU	RH	327C-77-0032S	Small metal cont.	0.031	22	218W4B	May-77		5	Solid	Radioactive		
TRU	RH	327C-77-0033S	Small metal cont.	0.031	22	218W4B	May-77		5	Solid	Radioactive		
TRU	RH	327C-77-0034S	Small metal cont.	0.031	22	218W4B	May-77		5	Solid	Radioactive		
TRU	RH	327C-77-0035S	Small metal cont.	0.031	22	218W4B	May-77		5	Solid	Radioactive		
TRU	RH	327C-77-0036S	Small metal cont.	0.031	22	218W4B	May-77		5	Solid	Radioactive		
TRU	RH	327C-77-0037S	Small metal cont.	0.031	22	218W4B	Jun-77		5	Solid	Radioactive		
TRU	RH	327C-77-0038S	Small metal cont.	0.031	22	218W4B	Jun-77		40	Solid	Radioactive		
TRU	RH	327C-77-0039S	Small metal cont.	0.031	22	218W4B	Jun-77		250	Solid	Radioactive		
TRU	RH	327C-77-0040S	Small metal cont.	0.031	22	218W4B	Jun-77		7	Solid	Radioactive		
TRU	RH	327C-77-0041S	Small metal cont.	0.031	22	218W4B	Jun-77		5	Solid	Radioactive		
TRU	RH	327C-77-0042S	Small metal cont.	0.031	22	218W4B	Jun-77		5	Solid	Radioactive		
TRU	RH	327C-77-0043S	Small metal cont.	0.031	22	218W4B	Jul-77		5	Solid	Radioactive		
TRU	RH	327C-77-0044S	Small metal cont.	0.031	22	218W4B	Jul-77		40	Solid	Radioactive		
TRU	RH	327C-77-0045S	Small metal cont.	0.031	22	218W4B	Jul-77		150	Solid	Radioactive		
TRU	RH	327C-77-0046S	Small metal cont.	0.031	22	218W4B	Jul-77		80	Solid	Radioactive		
TRU	RH	327C-77-0047S	Small metal cont.	0.031	22	218W4B	Jul-77		5	Solid	Radioactive		
TRU	RH	327C-77-0048S	Small metal cont.	0.031	22	218W4B	Jul-77		5	Solid	Radioactive		
TRU	RH	327C-77-0049S	Small metal cont.	0.031	22	218W4B	Aug-77		5	Solid	Radioactive		
TRU	RH	327C-77-0050S	Small metal cont.	0.031	22	218W4B	Aug-77		5	Solid	Radioactive		
TRU	RH	327C-77-0051S	Small metal cont.	0.031	22	218W4B	Aug-77		5	Solid	Radioactive		
TRU	RH	327C-77-0052S	Small metal cont.	0.031	22	218W4B	Aug-77		5	Solid	Radioactive		
TRU	RH	327C-77-0053S	Small metal cont.	0.031	22	218W4B	Aug-77		10	Solid	Radioactive		
TRU	RH	327C-77-0054S	Small metal cont.	0.031	22	218W4B	Aug-77		30	Solid	Radioactive		
TRU	RH	327C-77-0055S	Small metal cont.	0.031	22	218W4B	Aug-77		5	Solid	Radioactive		
TRU	RH	327C-77-0056S	Small metal cont.	0.031	22	218W4B	Sep-77		5	Solid	Radioactive		
TRU	RH	327C-77-0057S	Small metal cont.	0.031	22	218W4B	Sep-77		5	Solid	Radioactive		
TRU	RH	327C-77-0058S	Small metal cont.	0.031	22	218W4B	Sep-77		5	Solid	Radioactive		
TRU	RH	327C-77-0059S	Small metal cont.	0.031	22	218W4B	Sep-77		35	Solid	Radioactive		
TRU	RH	327C-77-0060S	Small metal cont.	0.031	22	218W4B	Sep-77		19	Solid	Radioactive		
TRU	RH	327C-77-0061S	Small metal cont.	0.031	22	218W4B	Sep-77		5 -	Solid	Radioactive		
TRU	RH	327C-77-0062S	Small metal cont.	0.031	22	218W4B	Sep-77		5	Solid	Radioactive		
TRU	RH	327C-77-0063S	Small metal cont.	0.031	22	218W4B	Sep-77		5	Solid	Radioactive		

Group	Handling(P)	Package ID	Container	Contain. volume	Gross weight	Storage facility	Date into TSD	Alpha Ci, total	Bet/Ga dose rate	Matrix	Contamination	DW codes	PCB ppm
TRU	RH	327C-77-0064S	Small metal cont.	0.031	22	218W4B	Oct-77		5	Solid	Radioactive		
TRU	RH	327C-77-0065S	Small metal cont.	0.031	22	218W4B	Oct-77		5	Solid	Radioactive		
TRU	RH	327C-77-0066S	Small metal cont.	0.031	22	218W4B	Nov-77		5	Solid.	Radioactive		
TRU	RH	327C-77-0067S	Small metal cont.	0.031	22	218W4B	Nov-77		40	Solid	Radioactive		
TRU	RH	327C-77-0068S	Small metal cont.	0.031	22	218W4B	Nov-77		5	Solid	Radioactive		
TRU	RH	327C-77-0069S	Small metal cont.	0.031	22	218W4B	Nov-77		10	Solid	Radioactive		
TRU	RH	327C-78-0001S	Small metal cont.	0.031	18	218W4B	Jan-78		10	Solid	Radioactive		
TRU	RH	327C-78-0002S	Small metal cont.	0.031	18	218W4B	Jan-78		35	Solid	Radioactive		
TRU	RH	327C-78-0003S	Small metal cont.	0.031	18	218W4B	Jan-78		10	Solid	Radioactive		
TRU	RH	327C-78-0004S	Small metal cont.	0.031	18	218W4B	Jan-78		70	Solid	Radioactive		
TRU	RH	327C-78-0005S	Small metal cont.	0.031	18	218W4B	Jan-78		5	Solid	Radioactive		
TRU	RH	327C-78-0006S	Small metal cont.	0.031	18	218W4B	Jan-78		5	Solid	Radioactive		
TRU	RH	327C-78-0007S	Small metal cont.	0.031	18	218W4B	Feb-78		5	Solid	Radioactive		
TRU	RH	327C-78-0008S	Small metal cont.	0.031	18	218W4B	Feb-78		5	Solid	Radioactive		
TRU	RH	327C-78-0009S	Small metal cont.	0.031	18	218W4B	Feb-78		5	Solid	Radioactive		
TRU	RH	327C-78-0010S	Small metal cont.	0.031	18	218W4B	Feb-78		5	Solid	Radioactive		
TRU	RH	327C-78-0011S	Small metal cont.	0.031	18	218W4B	Feb-78		5	Solid	Radioactive		
TRU	RH	327C-78-0012S	Small metal cont.	0.031	18	218W4B	Feb-78		5	Solid	Radioactive		
TRU	RH	327C-78-0013S	Small metal cont.	0.031	18	218W4B	Mar-78		120	Solid	Radioactive		
TRU	RH	327C-78-0014S	Small metal cont.	0.031	18	218W4B	Mar-78		5	Solid	Radioactive		
TRU	RH	327C-78-0015S	Small metal cont.	0.031	18	218W4B	Mar-78		5	Solid	Radioactive		
TRU	RH	327C-78-0016S	Small metal cont.	0.031	18	218W4B	Mar-78		5	Solid	Radioactive		
TRU	RH	327C-78-0017S	Small metal cont.	0.031	18	218W4B	Mar-78		5	Solid	Radioactive		
TRU	RH	327C-78-0018S	Small metal cont.	0.031	22	218W4B	Apr-78		5	Solid	Radioactive		
TRU	RH	327C-78-0019S	Small metal cont.	0.031	22	218W4B	Apr-78		5	Solid	Radioactive		
TRU	RH	327C-78-0020S	Small metal cont.	0.031	22	218W4B	Apr-78		5	Solid	Radioactive		
TRU	RH	327C-78-0021S	Small metal cont.	0.031	22	218W4B	Apr-78		5	Solid	Radioactive		
TRU	RH	327C-78-0022S	Small metal cont.	0.031	22	218W4B	Apr-78		10	Solid	Radioactive		
TRU	RH	327C-78-0023S	Small metal cont.	0.031	22	218W4B	May-78		10	Solid	Radioactive		
TRU	RH	327C-78-0024S	Small metal cont.	0.031	22	218W4B	May-78		5	Solid	Radioactive		
TRU	RH	327C-78-0025S	Small metal cont.	0.031	36	218W4B	May-78		150	Solid	Radioactive		
TRU	RH	327C-78-0026S	Small metal cont.	0.031	136	218W4B	May-78		150	Solid	Radioactive		
TRU	RH	327C-78-0027S	Small metal cont.	0.031	23	218W4B	Jun-78		30	Solid	Radioactive		
TRU	RH	327C-78-0028S	Small metal cont.	0.031	36	218W4B	Jun-78		30	Solid	Radioactive		
TRU	RH	327C-78-0029S	Small metal cont.	0.031	36	218W4B	Jul-78		100	Solid	Radioactive		
TRU	RH	327C-78-0030S	Small metal cont.	0.031	36	218W4B	Jul-78		2	Solid	Radioactive		
TRU	RH	327C-78-0031S	Small metal cont.	0.031	36	218W4B	Jul-78		5	Solid	Radioactive		
TRU	RH	327C-78-0032S	Small metal cont.	0.031	36	218W4B	Jul-78		25	Solid	Radioactive		
TRU	RH	327C-78-0033S	Small metal cont.	0.031	36	218W4B	Jul-78		100	Solid	Radioactive		
TRU	RH	327C-78-0034S	Small metal cont.	0.031	36	218W4B	Jul-78		1 -	Solid	Radioactive		
TRU	RH	327C-78-0035S	Small metal cont.	0.031	36	218W4B	Jul-78		500	Solid	Radioactive		
TRU	RH	327C-78-0036S	Small metal cont.	0.031	36	218W4B	Jul-78		250	Solid	Radioactive		

Group	Handling(P)	Package ID	Container	Contain. volume	Gross weight	Storage facility	Date into TSD	Alpha Ci, total	Bet/Ga dose rate	Matrix	Contamination	DW codes	PCB ppm
TRU	RH	327C-78-0037S	Small metal cont.	0.031	36	218W4B	Jul-78		150	Solid	Radioactive		
TRU	RH	327C-78-0038S	Small metal cont.	0.031	36	218W4B	Jul-78		6	Solid	Radioactive		
TRU	RH	327C-78-0040S	Small metal cont.	0.031	36	218W4B	Aug-78		40	Solid	Radioactive		
TRU	RH	327C-78-0041S	Small metal cont.	0.031	36	218W4B	Aug-78		120	Solid	Radioactive		
TRU	RH	327C-78-0042S	Small metal cont.	0.031	36	218W4B	Aug-78		150	Solid	Radioactive		
TRU	RH	327C-78-0043S	Misc. scrap	0.028	18	218W4B	Aug-78		100	Solid	Radioactive		
TRU	RH	327C-78-0044S	Small metal cont.	0.031	36	218W4B	Oct-78		125	Solid	Radioactive		
TRU	RH	327C-78-0045S	Small metal cont.	0.031	36	218W4B	Oct-78		125	Solid	Radioactive		
TRU	RH	327C-78-0046S	Small metal cont.	0.031	36	218W4B	Oct-78		225	Solid	Radioactive		
TRU	RH	327C-78-0047S	Small metal cont.	0.031	36	218W4B	Oct-78		100	Solid	Radioactive		
TRU	RH	327C-78-0048S	Small metal cont.	0.031	36	218W4B	Oct-78		100	Solid	Radioactive		
TRU	RH	327C-78-0049S	Small metal cont.	0.031	36	218W4B	Oct-78		100	Solid	Radioactive		
TRU	RH	327C-78-0050S	Small metal cont.	0.031	36	218W4B	Oct-78		160	Solid	Radioactive		
TRU	RH	327C-78-0051S	Misc. scrap	0.028	18	218W4B	Oct-78		150	Solid	Radioactive		
TRU	RH	327C-78-0052S	Small metal cont.	0.031	36	218W4B	Oct-78		100	Solid	Radioactive		
TRU	RH	327C-78-0054S	Small metal cont.	0.031	36	218W4B	Nov-78		150	Solid	Radioactive		
TRU	RH	327C-78-0055S	Small metal cont.	0.031	36	218W4B	Dec-78		120	Solid	Radioactive		
TRU	RH	327C-78-0056S	Small metal cont.	0.031	36	218W4B	Dec-78		10	Solid	Radioactive		
TRU	RH	327C-78-0057S	Small metal cont.	0.031	36	218W4B	Dec-78		10	Solid	Radioactive		
TRU	RH	327C-78-0058S	Small metal cont.	0.031	36	218W4B	Dec-78		10	Solid	Radioactive		
TRU	RH	327C-78-0059S	Small metal cont.	0.031	36	218W4B	Dec-78		10	Solid	Radioactive		
TRU	RH	327C-78-0060S	Small metal cont.	0.031	36	218W4B	Dec-78		250	Solid	Radioactive		
TRU	RH	327C-78-0061S	Small metal cont.	0.031	27	218W4B	Dec-78		10	Solid	Radioactive		
TRU	RH	327C-78-0062S	Equipment	0.028	45	218W4B	Dec-78		500	Solid	Radioactive		
TRU	RH	327C-78-0063S	Small metal cont.	0.031	27	218W4B	Dec-78		500	Solid	Radioactive		
TRU	RH	327C-79-0001S	Small metal cont.	0.031	27	218W4B	Feb-79			Solid	Radioactive		
TRU	RH	327C-79-0002S	Small metal cont.	0.031	27	218W4B	Feb-79		30	Solid	Radioactive		
TRU	RH	327C-79-0003S	Small metal cont.	0.035	27	218W4B	Feb-79		50	Solid	Radioactive		
TRU	RH	327C-79-0004S	Small metal cont.	0.035	27	218W4B	Mar-79		40	Solid	Radioactive		
TRU	RH	327C-79-0005S	Small metal cont.	0.035	27	218W4B	Mar-79			Solid	Radioactive		
TRU	RH	327C-79-0006S	Small metal cont.	0.035	27	218W4B	Apr-79		10	Solid	Radioactive		
TRU	RH	327C-79-0007S	Small metal cont.	0.035	27	218W4B	Apr-79		10	Solid	Radioactive		
TRU	RH	327C-79-0008S	Small metal cont.	0.035	27	218W4B	Apr-79		200	Solid	Radioactive		
TRU	RH	327C-79-0009S	Small metal cont.	0.035	27	218W4B	Apr-79		200	Solid	Radioactive		
TRU	RH	327C-79-0010S	Small metal cont.	0.035	27	218W4B	Apr-79		20	Solid	Radioactive		
TRU	RH	327C-79-0011S	Small metal cont.	0.035	27	218W4B	May-79		5	Solid	Radioactive		
TRU	RH	327C-79-0012S	Small metal cont.	0.035	27	218W4B	May-79		5	Solid	Radioactive		
TRU	RH	327C-79-0013S	Small metal cont.	0.035	27	218W4B	May-79		5	Solid	Radioactive		
TRU	RH	327C-79-0014S	Small metal cont.	0.035	8	218W4B	May-79		5	Solid	Radioactive		
TRU	RH	327C-79-0015S	Small metal cont.	0.035	27	218W4B	May-79		5	Solid	Radioactive		
TRU	RH	327C-79-0016S	Small metal cont.	0.035	27	218W4B	May-79		5	Solid	Radioactive		
TRU	RH	327C-79-0017S	Small metal cont.	0.035	27	218W4B	Jun-79		150	Solid	Radioactive		

Group	Handling(P)	Package ID	Container	Contain. volume	Gross weight	Storage facility	Date into TSD	Alpha Ci, total	Bet/Ga dose rate	Matrix	Contamination	DW codes	PCB ppm
TRU	RH	327C-79-0018S	Small metal cont.	0.035	27	218W4B	Jun-79		150	Solid	Radioactive		
TRU	RH	327C-79-0019S	Small metal cont.	0.035	27	218W4B	Jun-79		90	Solid	Radioactive		
TRU	RH	327C-79-0020S	Small metal cont.	0.035	27	218W4B	Jul-79		100	Solid	Radioactive		
TRU	RH	327C-79-0021S	Small metal cont.	0.035	27	218W4B	Jul-79		140	Solid	Radioactive		
TRU	RH	327C-79-0022S	Small metal cont.	0.035	27	218W4B	Jul-79		100	Solid	Radioactive		
TRU	RH	327C-79-0023S	Small metal cont.	0.035	36	218W4B	Aug-79		150	Solid	Radioactive		
TRU	RH	327C-79-0024S	Small metal cont.	0.035	36	218W4B	Aug-79			Solid	Radioactive		
TRU	RH	327C-79-0025S	Small metal cont.	0.035	36	218W4B	Aug-79			Solid	Radioactive		
TRU	RH	327C-79-0026S	Small metal cont.	0.035	36	218W4B	Aug-79			Solid	Radioactive		
TRU	RH	327C-79-0027S	Small metal cont.	0.035	36	218W4B	Aug-79		10	Solid	Radioactive		
TRU	RH	327C-79-0028S	Small metal cont.	0.035	36	218W4B	Oct-79		10	Solid	Radioactive		
TRU	RH	327C-79-0029S	Small metal cont.	0.035	36	218W4B	Oct-79		300	Solid	Radioactive		
TRU	RH	327C-79-0030S	Small metal cont.	0.035	36	218W4B	Oct-79		10	Solid	Radioactive		
TRU	RH	327C-79-0031S	Small metal cont.	0.035	36	218W4B	Nov-79		150	Solid	Radioactive		
TRU	RH	327C-79-0032S	Small metal cont.	0.035	36	218W4B	Nov-79		220	Solid	Radioactive		
TRU	RH	327C-79-0033S	Small metal cont.	0.035	36	218W4B	Nov-79		150	Solid	Radioactive		
TRU	RH	327C-79-0034S	Small metal cont.	0.035	36	218W4B	Nov-79		10	Solid	Radioactive		
TRU	RH	327C-79-0035S	Small metal cont.	0.035	36	218W4B	Dec-79		250	Solid	Radioactive		
TRU	RH	327C-80-0001S	Small metal cont.	0.035	27	218W4B	Jun-80		50	Solid	Radioactive		
TRU	RH	327C-80-0002S	Small metal cont.	0.031	27	218W4B	Jun-80		160	Solid	Radioactive		
TRU	RH	327C-80-0003S	Small metal cont.	0.035	27	218W4B	Jul-80		250	Solid	Radioactive		
TRU	RH	327C-80-0004S	Small metal cont.	0.035	27	218W4B	Jul-80		300	Solid	Radioactive		
TRU	RH	327C-80-0005S	Small metal cont.	0.035	27	218W4B	Jul-80		15	Solid	Radioactive		
TRU	RH	327C-80-0006S	Small metal cont.	0.035	27	218W4B	Jul-80		20	Solid	Radioactive		
TRU	RH	327C-80-0007S	Small metal cont.	0.035	27	218W4B	Jul-80		150	Solid	Radioactive		
TRU	RH	327C-80-0008S	Small metal cont.	0.035	27	218W4B	Jul-80		100	Solid	Radioactive		
TRU	RH	327C-80-0009S	Small metal cont.	0.035	27	218W4B	Jul-80		35	Solid	Radioactive		
TRU	RH	327C-80-0010S	Small metal cont.	0.035	29	218W4B	Aug-80		80	Solid	Radioactive		
TRU	RH	327C-80-0011S	Small metal cont.	0.035	27	218W4B	Aug-80		8	Solid	Radioactive		
TRU	RH	327C-80-0012S	Small metal cont.	0.035	27	218W4B	Aug-80		2	Solid	Radioactive		
TRU	RH	327C-80-0013S	Small metal cont.	0.035	36	218W4B	Aug-80		1	Solid	Radioactive		
TRU	RH	327C-80-0014S	Small metal cont.	0.035	32	218W4B	Sep-80		4	Solid	Radioactive		
TRU	RH	327C-80-0015S	Small metal cont.	0.035	27	218W4B	Sep-80		4	Solid	Radioactive		
TRU	RH	327C-80-0016S	Small metal cont.	0.035	27	218W4B	Oct-80		2	Solid	Radioactive		
TRU	RH	327C-80-0017S	Small metal cont.	0.035	27	218W4B	Oct-80		2	Solid	Radioactive		
TRU	RH	327C-80-0018S	Small metal cont.	0.035	29	218W4B	Nov-80		4	Solid	Radioactive		
TRU	RH	327C-80-0019S	Small metal cont.	0.035	27	218W4B	Nov-80		4	Solid	Radioactive		
TRU	RH	327C-80-0020S	Small metal cont.	0.035	36	218W4B	Dec-80		10	Solid	Radioactive		
TRU	RH	327C-81-0001S	Small metal cont.	0.035	32	218W4B	Jan-81		22	Solid	Radioactive		
TRU	RH	327C-81-0003S	Small metal cont.	0.035	29	218W4B	Feb-81		2	Solid	Radioactive		
TRU	RH	327C-81-0004S	Small metal cont.	0.035	36	218W4B	Feb-81		50	Solid	Radioactive		
TRU	RH	327C-81-0005S	Small metal cont.	0.035	32	218W4B	Feb-81		12	Solid	Radioactive		

Group	Handling(P)	Package ID	Container	Contain. volume	Gross weight	Storage facility	Date into TSD	Alpha Ci, total	Bet/Ga dose rate	Matrix	Contamination	DW codes	PCB ppm
TRU	RH	327C-81-0006S	Small metal cont.	0.035	36	218W4B	Feb-81		40	Solid	Radioactive		
TRU	RH	327C-81-0008S	Small metal cont.	0.035	32	218W4B	Mar-81		1	Solid	Radioactive		
TRU	RH	327C-81-0010S	Small metal cont.	0.035	32	218W4B	Apr-81		15	Solid,	Radioactive		
TRU	RH	327C-81-0011S	Small metal cont.	0.035	36	218W4B	Apr-81		15	Solid	Radioactive		
TRU	RH	327C-81-0012S	Small metal cont.	0.035	36	218W4B	Apr-81		10	Solid	Radioactive		
TRU	RH	327C-81-0014S	Small metal cont.	0.035	36	218W4B	May-81		1	Solid	Radioactive		
TRU	RH	327C-81-0015S	Small metal cont.	0.035	34	218W4B	Jun-81		40	Solid	Radioactive		
TRU	RH	327C-81-0017S	Small metal cont.	0.035	36	218W4B	Jun-81		30	Solid	Radioactive		
TRU	RH	327C-81-0018S	Small metal cont.	0.035	36	218W4B	Jun-81		1	Solid	Radioactive		
TRU	RH	327C-81-0019S	Small metal cont.	0.035	32	218W4B	Jun-81		4	Solid	Radioactive		
TRU	RH	327C-81-0020S	Small metal cont.	0.035	32	218W4B	Jul-81		75	Solid	Radioactive		
TRU	RH	327C-81-0021S	Small metal cont.	0.035	29	218W4B	Jul-81		25	Solid	Radioactive		
TRU	RH	327C-81-0022S	Small metal cont.	0.035	32	218W4B	Aug-81		30	Solid	Radioactive		
TRU	RH	327C-81-0024S	Small metal cont.	0.035	27	218W4B	Aug-81		30	Solid	Radioactive		
TRU	RH	327C-81-0025S	Small metal cont.	0.035	29	218W4B	Aug-81		15	Solid	Radioactive		
TRU	RH	327C-81-0027S	Small metal cont.	0.035	29	218W4B	Sep-81		300	Solid	Radioactive		
TRU	RH	327C-81-0028S	Small metal cont.	0.035	23	218W4B	Sep-81		80	Solid	Radioactive		
TRU	RH	327C-81-0029S	Small metal cont.	0.035	27	218W4B	Oct-81		90	Solid	Radioactive		
TRU	RH	327C-81-0031S	Small metal cont.	0.035	29	218W4B	Nov-81		80	Solid	Radioactive		
TRU	RH	327C-82-0001S	Small metal cont.	0.035	27	218W4B	Jan-82		70	Solid	Radioactive		
TRU	RH	327C-82-0004S	Small metal cont.	0.035	25	218W4B	Jan-82		35	Solid	Radioactive		
TRU	RH	327C-82-0005S	Small metal cont.	0.035	27	218W4B	Feb-82		60	Solid	Radioactive		
TRU	RH	327C-82-0007S	Small metal cont.	0.035	25	218W4B	Mar-82		60	Solid	Radioactive		
TRU	RH	327C-82-0008S	Small metal cont.	0.035	41	218W4B	Mar-82		220	Solid	Radioactive		
TRU	RH	327C-82-0009S	Small metal cont.	0.035	23	218W4B	Apr-82		35	Solid	Radioactive		
TRU	RH	327C-82-0011S	Small metal cont.	0.035	23	218W4B	May-82		50	Solid	Radioactive		
TRU	RH	327C-82-0013S	Small metal cont.	0.035	27	218W4B	Jun-82		50	Solid	Radioactive		
TRU	RH	327C-82-0014S	Small metal cont.	0.035	27	218W4B	Jul-82		50	Solid	Radioactive		
TRU	RH	327C-82-0015S	Small metal cont.	0.035	27	218W4B	Jul-82		40	Solid	Radioactive		
TRU	RH	327C-82-0017S	Small metal cont.	0.035	36	218W4B	Sep-82		50	Solid	Radioactive		
TRU	RH	327C-82-0018S	Small metal cont.	0.035	36	218W4B	Sep-82		50	Solid	Radioactive		
TRU	RH	327C-82-0021S	Small metal cont.	0.035	32	218W4B	Nov-82		50	Solid	Radioactive		
TRU	RH	327C-82-0023S	Small metal cont.	0.035	29	218W4B	Dec-82		50	Solid	Radioactive		
TRU	RH	327C-82-0024S	Small metal cont.	0.035	32	218W4B	Dec-82		50	Solid	Radioactive		
TRU	RH	327C-83-0001S	Small metal cont.	0.035	27	218W4B	Jan-83		50	Solid	Radioactive		
TRU	RH	327C-83-0002S	Small metal cont.	0.035	29	218W4B	Jan-83		50	Solid	Radioactive		
TRU	RH	327C-83-0003S	Small metal cont.	0.035	27	218W4B	Feb-83			Solid	Radioactive		
TRU	RH	327C-83-0004S	Small metal cont.	0.035	27	218W4B	Feb-83			Solid	Radioactive		
TRU	RH	327C-83-0005S	Small metal cont.	0.035	32	218W4B	Mar-83			Solid	Radioactive		
TRU	RH	327C-83-0006S	Small metal cont.	0.035	32	218W4B	Mar-83		-	Solid	Radioactive		
TRU	RH	327C-83-0007S	Small metal cont.	0.035	32	218W4B	Mar-83			Solid	Radioactive		
TRU	RH	327C-83-0008S	Small metal cont.	0.035	32	218W4B	Apr-83		150	Solid	Radioactive		

Group	Handling(P)	Package ID	Container	Contain. volume	Gross weight	Storage facility	Date into TSD	Alpha Ci, total	Bet/Ga dose rate	Matrix	Contamination	DW codes	PCB ppm
TRU	RH	327C-83-0009S	Small metal cont.	0.035	29	218W4B	Apr-83		150	Solid	Radioactive		
TRU	RH	327C-83-0010S	Small metal cont.	0.035	32	218W4B	Apr-83		150	Solid	Radioactive		
TRU	RH	327C-83-0011S	Small metal cont.	0.035	29	218W4B	Apr-83		150	Solid	Radioactive		
TRU	RH	327C-83-0013S	Small metal cont.	0.035	29	218W4B	May-83		150	Solid	Radioactive		
TRU	RH	327C-83-0014S	Small metal cont.	0.035	29	218W4B	Jun-83		150	Solid	Radioactive		
TRU	RH	327C-83-0016S	Small metal cont.	0.035	32	218W4B	Jul-83		100	Solid	Radioactive		
TRU	RH	327C-83-0017S	Small metal cont.	0.035	34	218W4B	Aug-83		100	Solid	Radioactive		
TRU	RH	327C-83-0018S	Small metal cont.	0.035	29	218W4B	Aug-83		100	Solid	Radioactive		
TRU	RH	327C-83-0019S	Small metal cont.	0.035	27	218W4B	Aug-83		150	Solid	Radioactive		
TRU	RH	327C-83-0020S	Small metal cont.	0.035	27	218W4B	Sep-83		150	Solid	Radioactive		
TRU	RH	327C-83-0021S	Small metal cont.	0.035	27	218W4B	Sep-83		150	Solid	Radioactive		
TRU	RH	327C-83-0022S	Small metal cont.	0.035	39	218W4B	Oct-83		1	Solid	Radioactive		
TRU	RH	327C-83-0023S	Small metal cont.	0.035	36	218W4B	Oct-83		1	Solid	Radioactive		
TRU	RH	327C-84-0001S	Small metal cont.	0.035	34	218W4B	Jan-84		20	Solid	Radioactive		
TRU	RH	327C-84-0002S	Small metal cont.	0.035	27	218W4B	Feb-84		20	Solid	Radioactive		
TRU	RH	327C-84-0003S	Small metal cont.	0.035	41	218W4B	Feb-84		20	Solid	Radioactive		
TRU	RH	327C-84-0004S	Small metal cont.	0.035	27	218W4B	Mar-84		10	Solid	Radioactive		
TRU	RH	327C-84-0006S	Small metal cont.	0.035	27	218W4B	Apr-84		10	Solid	Radioactive		
TRU	RH	327C-84-0007S	Small metal cont.	0.035	27	218W4B	May-84		10	Solid	Radioactive		
TRU	RH	327C-84-0008S	Small metal cont.	0.035	32	218W4B	Jun-84		10	Solid	Radioactive		
TRU	RH	327C-84-0009S	Small metal cont.	0.035	32	218W4B	Jun-84		10	Solid	Radioactive		
TRU	RH	327C-84-0010S	Small metal cont.	0.035	29	218W4B	Jul-84		1	Solid	Radioactive		
TRU	RH	327C-84-0012S	Small metal cont.	0.035	29	218W4B	Aug-84		1	Solid	Radioactive		
TRU	RH	327C-84-0013S	Small metal cont.	0.035	32	218W4B	Aug-84		1	Solid	Radioactive		
TRU	RH	327C-84-0014S	Small metal cont.	0.035	41	218W4B	Sep-84		1	Solid	Radioactive		
TRU	RH	327C-84-0015S	Small metal cont.	0.035	29	218W4B	Sep-84		1	Solid	Radioactive		
TRU	RH	327C-84-0016S	Small metal cont.	0.035	27	218W4B	Oct-84		50	Solid	Radioactive		
TRU	RH	327C-84-0017S	Small metal cont.	0.035	36	218W4B	Oct-84		50	Solid	Radioactive		
TRU	RH	327C-84-0018S	Small metal cont.	0.035	32	218W4B	Nov-84		50	Solid	Radioactive		
TRU	RH	327C-85-0003S	Small metal cont.	0.035	36	218W4B	Jun-85		10	Solid	Radioactive		
TRU	RH	327C-85-0005S	Small metal cont.	0.035	27	218W4B	Jun-85		10	Solid	Radioactive		
TRU	RH	327C-85-0006S	Small metal cont.	0.035	32	218W4B	Jun-85		4	Solid	Radioactive		
TRU	RH	327C-85-0007S	Small metal cont.	0.035	32	218W4B	Jun-85		80	Solid	Radioactive		
TRU	RH	327C-85-0011S	Small metal cont.	0.035	36	218W4B	Jul-85		80	Solid	Radioactive		
TRU	RH	327C-85-0012S	Small metal cont.	0.035	36	218W4B	Aug-85		140	Solid	Radioactive		
TRU	RH	327C-85-0013S	Small metal cont.	0.035	36	218W4B	Aug-85		25	Solid	Radioactive		
TRU	RH	327C-85-0014S	Small metal cont.	0.035	36	218W4B	Sep-85		36	Solid	Radioactive		
TRU	RH	327C-85-0015S	Small metal cont.	0.035	36	218W4B	Sep-85		22	Solid	Radioactive		
TRU	RH	327C-85-0016S	Small metal cont.	0.035	36	218W4B	Oct-85		20	Solid	Radioactive		
TRU	RH	327C-85-0019S	Small metal cont.	0.035	36	218W4B	Dec-85		6	Solid	Radioactive		
TRU	RH	327C-85-0020S	Small metal cont.	0.035	27	218W4B	Dec-85		10	Solid	Radioactive		
TRU	RH	327C-85-0021S	Small metal cont.	0.035	32	218W4B	Dec-85		16	Solid	Radioactive		

Group	Handling(P)	Package ID	Container	Contain. volume	Gross weight	Storage facility	Date into TSD	Alpha Ci, total	Bet/Ga dose rate	Matrix	Contamination	DW codes	PCB ppm
TRU	RH	327C-85-0022S	Small metal cont.	0.035	32	218W4B	Dec-85		16	Solid	Radioactive		
TRU	RH	327C-86-0001S	Small metal cont.	0.035	14	218W4B	Jan-86		14	Solid	Radioactive		
TRU	RH	327C-86-0002S	Small metal cont.	0.028	27	218W4B	Jan-86		10	Solid	Radioactive		
TRU	RH	327C-86-0003S	Small metal cont.	0.033	29	218W4B	Feb-86		14	Solid	Radioactive		
TRU	RH	327C-86-0004S	Small metal cont.	0.035	32	218W4B	Jun-86		100	Solid	Radioactive		
TRU	RH	327C-86-0006S	Small metal cont.	0.035	27	218W4B	Jun-86		2	Solid	Radioactive		
TRU	RH	327C-86-0007S	Small metal cont.	0.012	5	218W4B	Jul-86		10	Solid	Radioactive		
TRU	RH	327C-86-0008S	Small metal cont.	0.008	5	218W4B	Jul-86		10	Solid	Radioactive		
TRU	RH	327C-86-0009S	Small metal cont.	0.012	5	218W4B	Jul-86		10	Solid	Radioactive		
TRU	RH	327C-86-0011S	Small metal cont.	0.012	7	218W4B	Aug-86		30	Solid	Radioactive		
TRU	RH	327C-86-0012S	Small metal cont.	0.012	5	218W4B	Aug-86		30	Solid	Radioactive		
TRU	RH	327C-86-0013S	Small metal cont.	0.009	5	218W4B	Aug-86		30	Solid	Radioactive		
TRU	RH	327C-86-0014S	Small metal cont.	0.035	27	218W4B	Aug-86		8	Solid	Radioactive		
TRU	RH	327C-86-0015S	Small metal cont.	0.035	35	218W4B	Sep-86		15	Solid	Radioactive		
TRU	RH	327C-86-0016S	Small metal cont.	0.035	39	218W4B	Oct-86		25	Solid	Radioactive		
TRU	RH	327C-86-0017S	Small metal cont.	0.035	27	218W4B	Nov-86		10	Solid	Radioactive		
TRU	RH	327C-86-0018S	Small metal cont.	0.035	27	218W4B	Nov-86		16	Solid	Radioactive		
TRU	RH	327C-86-0019S	Small metal cont.	0.035	38	218W4B	Dec-86		10	Solid	Radioactive		
TRU	RH	327C-87-0001S	Small metal cont.	0.035	27	218W4B	Jan-87		30	Solid	Radioactive		
TRU	RH	327C-87-0017S	Small metal cont.	0.035	29	218W4B	May-87		30	Solid	Radioactive		
TRU	RH	327C-87-0018S	Small metal cont.	0.035	23	218W4B	Jun-87		35	Solid	Radioactive		
TRU	RH	327C-87-0019S	Small metal cont.	0.035	23	218W4B	Jun-87		25	Solid	Radioactive		
TRU	RH	327C-87-0020S	Small metal cont.	0.035	29	218W4B	Jun-87		10	Solid	Radioactive		
TRU	RH	327C-87-0023S	Small metal cont.	0.035	29	218W4B	Jul-87	0.01	16	Solid	Radioactive		
TRU	RH	327C-87-0024S	Small metal cont.	0.035	23	218W4B	Aug-87	0.29	10	Solid	Radioactive		
TRU	RH	327C-87-0025S	Small metal cont.	0.035	23	218W4B	Sep-87		7	Solid	Radioactive		
TRU	RH	327C-87-0026S	Small metal cont.	0.035	29	218W4B	Sep-87		11	Solid	Radioactive		
TRU	RH	327C-87-0027S	Small metal cont.	0.035	25	218W4B	Sep-87		12	Solid	Radioactive		
TRU	RH	327C-87-0028S	Small metal cont.	0.035	23	218W4B	Oct-87			Solid	Radioactive		
TRU	RH	327C-87-0029S	Small metal cont.	0.035	18	218W4B	Oct-87			Solid	Radioactive		
TRU	RH	327C-87-0030S	Small metal cont.	0.035	10	218W4B	Oct-87		50	Solid	Radioactive		
TRU	RH	327C-87-0035S	Small metal cont.	0.035	18	218W4B	Nov-87		5	Solid	Radioactive		
TRU	RH	327C-87-0036S	Small metal cont.	0.035	23	218W4B	Dec-87		5	Solid	Radioactive		
TRU	RH	327C-88-0001S	Small metal cont.	0.018	11	218W4B	Jan-88		3	Solid	Radioactive		
TRU	RH	327C-88-0002S	Small metal cont.	0.018	11	218W4B	Jan-88		3	Solid	Radioactive		
TRU	RH	327C-88-0003S	Small metal cont.	0.035	23	218W4B	Feb-88		3	Solid	Radioactive		
TRU	RH	327C-88-0004S	Small metal cont.	0.035	23	218W4B	Feb-88		4	Solid	Radioactive		
TRU	RH	327C-88-0005S	Small metal cont.	0.035	23	218W4B	Feb-88		3	Solid	Radioactive		
TRU	RH	327C-88-0019S	Small metal cont.	0.035	23	218W4B	May-88		5	Solid	Radioactive		
TRU	RH	327-EBRIIA-1	EBR II cask	0.020	2,455	218W4C	Sep-97	177.63	13-	Solid	Radioactive		
TRU	RH	327-EBRIIA-2	EBR II cask	0.020	2,455	218W4C	Sep-97	7.42	2	Solid	Radioactive		
TRU	RH	327-EBRIIA-3	EBR II cask	0.020	2,455	218W4C	Sep-97	17.06	3	Solid	Radioactive		

Group	Handling(P)	Package ID	Container	Contain. volume	Gross weight	Storage facility	Date into TSD	Alpha Ci, total	Bet/Ga dose rate	Matrix	Contamination	DW codes	PCB ppm
TRU	RH	327-EBRIIA-4	EBR II cask	0.020	2,455	218W4C	Sep-97	16.62	2	Solid	Radioactive		
TRU	RH	327-EBRIIA-5	EBR II cask	0.020	2,455	218W4C	Sep-97	17.00	2	Solid	Radioactive		
TRU	RH	GE-74-015	Concrete box	5.324	12,247	218W3A	Jun-74		600	Solid	Radioactive		
TRU	RH	GNS-12-1	Metal cask	0.500	11,520	2420W	Oct-97	1.56	70	Solid	Radioactive		
TRU	RH	GNS-12-2	Metal cask	0.500	11,509	2420W	Oct-97	0.98	70	Solid	Radioactive		
TRU	RH	K4-77-4	Metal drum	0.210	68	218W4B	May-77		1,500	Solid	Radioactive		
TRU	RH	KE-77-1	Metal drum	0.210	68	218W4B	Jun-77		1,500	Solid	Radioactive		
TRU	RH	KE-77-2	Metal drum	0.210	68	218W4B	Jun-77		1,500	Solid	Radioactive		
TRU	RH	KE-77-3	Metal drum	0.210	68	218W4B	May-77		1,500	Solid	Radioactive		
TRU	RH	L72-147	Metal drum	0.210	68	218W4B	Oct-72		2,500	Solid	Radioactive		
TRU	RH	L72-148	Metal drum	0.210	68	218W4B	Oct-72		1,500	Solid	Radioactive		
TRU	RH	L72-149	Metal drum	0.210	68	218W4B	Oct-72		1,500	Solid	Radioactive		
TRU	RH	L72-150	Metal drum	0.210	68	218W4B	Oct-72		450	Solid	Radioactive		
TRU	RH	L-77-04	Metal drum	0.210	68	218W4B	Jun-77		700	Solid	Radioactive		
TRU	RH	L-77-05	Metal drum	0.210	68	218W4B	Jun-77		700	Solid	Radioactive		
TRU	RH	L-78-06	Metal drum	0.210	68	218W4B	Jan-78		350	Solid	Radioactive		
TRU	RH	PNL-TRU-95000	EBR II cask	0.250	2,214	218W4C	Sep-95	69.96	3	Solid	Radioactive		
TRU	RH	PNL-TRU-95035	EBR II cask	0.250	2,230	218W4C	Sep-95	1.27	6	Solid	Radioactive		
TRU	RH	PNL-TRU-95036	EBR II cask	0.250	2,218	218W4C	Sep-95	1.15	8	Solid	Radioactive		
TRU	RH	R-76-010	Metal drum	0.210	68	218W4B	Apr-76		210	Solid	Radioactive		
TRU	RH	UNC-55-6	EBR II cask	0.250	3,277	218W4C	Feb-83		13	Solid	Radioactive		
TRU	RH	WH-77-871	Metal drum	0.210	68	218W4B	May-77		800	Solid	Radioactive		
TRU	RH	WH-77-872	Metal drum	0.210	68	218W4B	May-77		250	Solid	Radioactive		
TRUM	RH	1680121	Metal drum	0.210	652	218W4C	Oct-86		652	Solid	Mixed		
TRUM	RH	9403117	Metal drum	0.208	112	324	#N/A	0.07	230	Solid	Mixed		
TRUM	RH	9521771	Metal drum	0.208	121	324	#N/A	0.02	1,300	Solid	Mixed		
TRUM	RH	324-F-102	Metal drum	0.208	124	324	#N/A	0.01	800	Solid	Mixed		
TRUM	RH	324-SMF-TTDP	Metal drum	0.208	183	324	#N/A	0.03	800	Solid	Mixed		
TRUM	RH	6514-4.C	Metal cask	0.570	1,570	218W3A	Sep-87	0.00	160	Solid	Mixed		
TRUM	RH	BNW-7	Metal cask	0.425	2,903	218W4C	Apr-79		30	Solid	Mixed		
TRUM	RH	BNW-79-1	Metal cask	0.425	2,903	218W4C	Mar-80		40	Solid	Mixed		
TRUM	RH	BNW-79-10	Metal cask	0.425	2,903	218W4C	Apr-79		150	Solid	Mixed		
TRUM	RH	BNW-79-2	Metal cask	0.425	2,903	218W4C	Mar-80		40	Solid	Mixed		
TRUM	RH	BNW-79-3	Metal cask	0.425	2,903	218W4C	May-80		200	Solid	Mixed		
TRUM	RH	BNW-79-4	Metal cask	0.425	2,903	218W4C	May-80		50	Solid	Mixed		
TRUM	RH	BNW-79-5	Metal cask	0.425	2,903	218W4C	Apr-79		130	Solid	Mixed		
TRUM	RH	BNW-79-8	Metal cask	0.425	2,903	218W4C	Apr-79		30	Solid	Mixed		
TRUM	RH	BNW-79-9	Metal cask	0.425	2,903	218W4C	Apr-79		150	Solid	Mixed		
TRUM	RH	BNW-89-6	Metal cask	0.425	2,903	218W4C	Apr-79		130	Solid	Mixed		
TRUM	RH	HEDL-013	EBR II cask	0.695	2,495	218W4C	Dec-84		240	Solid	Mixed		
TRUM	RH	PNL186-28	EBR II cask	0.810	2,903	218W4C	Mar-87	0.81	50	Solid	Mixed		
TRUM	RH	PNLD-94-032	Metal drum	0.208	135	324	#N/A	0.01	260	Solid	Mixed		

Group	Handling(P)	Package ID	Container	Contain. volume	Gross weight	Storage facility	Date into TSD	Alpha Ci, total	Bet/Ga dose rate	Matrix	Contamination	DW codes	PCB ppm
TRUM	RH	PNLD-94-050	Metal drum	0.208	123	324	#N/A	0.12	700	Solid	Mixed		
TRUM	RH	PNLD-94-124	Metal drum	0.208	138	324	#N/A	0.01	400	Solid	Mixed		
TRUM	RH	PNLD-96-197	Metal drum	0.208	112	324	#N/A	0.01	460	Solid	Mixed		

APPENDIX C

WORK BREAKDOWN STRUCTURE AND DICTIONARY

M-91-03 TRU/M PROJECT MANAGEMENT PLAN
WBS FOR NEW PROCESSING CAPACITY

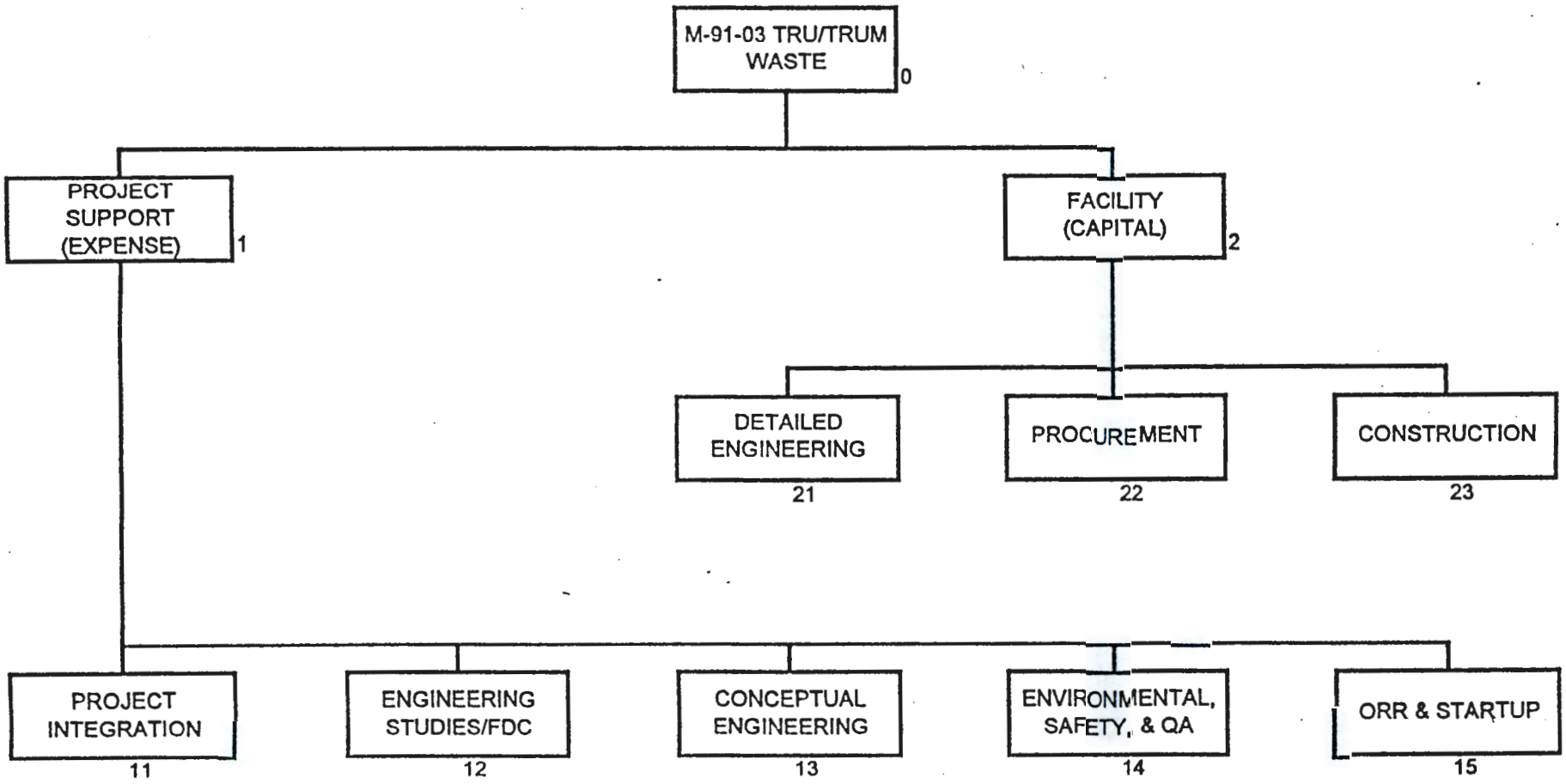

PROJECT SUMMARY WORK BREAKDOWN STRUCTURE DICTIONARY
ELEMENT DEFINITION

1. Project Title: M-91-03 TRU/TRUM Waste
2. Date: February 1, 2000
3. Identification Number:
4. WBS Element Code: 0
5. WBS Element Title: M-91-03 TRU/TRUM Waste
6. Index Line No:
7. Approved Changes:
8. System Description:
9. Budget and Reporting Number:

---

10. Element Task Description:

a) Cost Content:
- Engineering and Design
- Labor
- Procurement
- Travel
- Project Management
- Other Hanford Contractor Services:
  - Document Control
- Subcontractor Efforts
  - Offsite Architect-Engineer
  - Fixed-Price Construction Contractor

b) Technical Content:
- Engineering and Design
- Improvement to Land
- Buildings
- Utilities
- Special Equipment /Process Systems
- Office Furniture/Equipment
- Shop Equipment

c) Work Statement: The M-91-03 TRU/TRUM Waste facilities will retrieve, receive, sort, process, and repackage Contact Handled (CH) TRU/TRUM Waste and Remote Handled (RH) TRU/TRUM Waste for shipment to disposal. As highest level WBS element, all of the project work is included in this element.

PROJECT SUMMARY WORK BREAKDOWN STRUCTURE DICTIONARY
ELEMENT DEFINITION

1. Project Title: M-91-03 TRU/TRUM Waste
2. Date: February 1, 2000
3. Identification Number:
4. WBS Element Code: 1
5. WBS Element Title: Project Support (Expense)
6. Index Line No:
7. Approved Changes:
8. System Description:
9. Budget and Reporting Number:

---

10. Element Task Description:

a) Cost Content: Labor
Miscellaneous Services
Travel
P O Contract
Computers
Office Supplies
Duplicating

b) Technical Content: Provide project integration, systems engineering, operations preparedness and startup, conceptual design, equipment development and testing, and environmental, safety and QA support for the M-91-03 TRU/TRUM Waste.

c) Work Statement: Integrate the work of all project participants and provide data management for the project. Provide engineering support for process definition. Develop procedures and specifications for plant startup and operation. Develop project scope, cost estimate, schedule and design parameters. Evaluate development of process equipment to be used for the project. Prepare the project safety related reports and oversee the project QA requirements.

PROJECT SUMMARY WORK BREAKDOWN STRUCTURE DICTIONARY
ELEMENT DEFINITION

1. Project Title: M-91-03 TRU/TRUM Waste
2. Date: February 1, 2000
3. Identification Number:
4. WBS Element Code:11
5. WBS Element Title: Project Integration
6. Index Line No:
7. Approved Changes:
8. System Description:
9. Budget and Reporting Number:

---

10. Element Task Description:

a) Cost Content: Labor
Travel
Miscellaneous Services
Commercial Interface
Office supplies
Duplicating
Microfilming

b) Technical Content: Provide project management and control during construction and startup at the M-91-03 facilities. Provide contractual support for commercial interface. Provide document control and engineering support for the project.

c) Work Statement: Integrate the interfacing of all project participants including scheduling, budgeting, performance measurement, baseline charge control administration and project plans and procedures. Administer project data management activities and provide engineering support for the statement of work safety documentation and reviews. Provide contractual support for the placement of commercial contracts.

PROJECT SUMMARY WORK BREAKDOWN STRUCTURE DICTIONARY
ELEMENT DEFINITION

1. Project Title: M-91-03 TRU/TRUM Waste
2. Date: February 1, 2000
3. Identification Number:
4. WBS Element Code: 12
5. WBS Element Title: Engineering Studies/FDC
6. Index Line No:
7. Approved Changes:
8. System Description:
9. Budget and Reporting Number:

---

10. Element Task Description:

a) Cost Content: Labor
Material
Travel
P O Contracts

b) Technical Content: Develop the Functional Design Criteria. Plan the M-91-03 equipment evaluation and provide technical direction to interface with the A/E for mechanical equipment systems.

c) Work Statement: Evaluate vendor demonstrations for applicability to waste stream.

PROJECT SUMMARY WORK BREAKDOWN STRUCTURE DICTIONARY
ELEMENT DEFINITION

1. Project Title: M-91-03 TRU/TRUM Waste
2. Date: February 1, 2000
3. Identification Number:
4. WBS Element Code: 13
5. WBS Element Title: Conceptual Engineering
6. Index Line No:
7. Approved Changes:
8. System Description:
9. Budget and Reporting Number:

---

10. Element Task Description:

    a) Cost Content: Labor
    AE Contract

    b) Technical Content: Perform conceptual and advanced conceptual design of the M-91-03 TRU/TRUM Waste

    c) Work Statement: Develop a project scope, assure project feasibility and attainable performance levels, and develop a project cost estimate, schedules, and design parameters. Identify applicable codes and standards, quality assurance requirements, environmental studies, material of construction, space allowances, energy conservation features, and health safety, safeguards, and security requirements.

PROJECT SUMMARY WORK BREAKDOWN STRUCTURE DICTIONARY
ELEMENT DEFINITION

1. Project Title: M-91-03 TRU/TRUM Waste
2. Date: February 1, 2000
3. Identification Number:
4. WBS Element Code: 14
5. WBS Element Title: Environmental, Safety & QA
6. Index Line No:
7. Approved Changes:
8. System Description:
9. Budget and Reporting Number:

---

10. Element Task Description:

    a) Cost Content: Labor
    Travel
    Consultant Services

    b) Technical Content: Provide environmental, safety and QA technical support to the M-91-03 project.

    c) Work Statement: Prepare the revision to the existing safety basis. Oversee Project environmental, safety, and QA requirements.

PROJECT SUMMARY WORK BREAKDOWN STRUCTURE DICTIONARY
ELEMENT DEFINITION

1. Project Title: M-91-03 TRU/TRUM Waste
2. Date: February 1, 2000
3. Identification Number:
4. WBS Element Code: 15
5. WBS Element Title: Operational Readiness Review and Startup
6. Index Line No:
7. Approved Changes:
8. System Description:
9. Budget and Reporting Number:

---

10. Element Task Description:

a) Cost Content:
Labor
Material
Travel
P O Contract
Overhead

b) Technical Content: Provide operational and startup planning including staffing and training. Provide operability and maintainability input to design and construction.

c) Work Statement: Review and monitor activities to assure designs meet programmatic/operational needs. Begin planning for operational startup including training preparations, planning and operating procedure planning.

PROJECT SUMMARY WORK BREAKDOWN STRUCTURE DICTIONARY
ELEMENT DEFINITION

1. Project Title: M-91-03 TRU/TRUM Waste
2. Date: February, 1, 2000
3. Identification Number:
4. WBS Element Code: 2 .
5. WBS Element Title: Facility (Capital)
6. Index Line No:
7. Approved Changes:
8. System Description:
9. Budget and Reporting Number:

---

10. Element Task Description:

a) Cost Content: Labor
A/E Services (DOE Contract)
Travel
Fixed Price Construction Contractor
Other Hanford Contractor Services:
Construction Management and Administration
Procurement (GFE)

b) Technical Content: Provide Design. Perform Site Facility Construction and provide Construction Management services. Procure Equipment.

c) Work Statement: Perform Design of the M-91-03 facilities including all drawings, specifications and test procedures for all site work, utilities, buildings, process equipment, and standard equipment and furnishings. Provide construction management services and construct the M-91-03 facilities in accordance with the detailed design and perform testing to verify that the construction and equipment conform to design requirements. Prepare procurement documents for and procure equipment.

PROJECT SUMMARY WORK BREAKDOWN STRUCTURE DICTIONARY
ELEMENT DEFINITION

1. Project Title: M-91 –03 TRU/TRUM Waste
2. Date: February 1, 2000
3. Identification Number:
4. WBS Element Code: 21
5. WBS Element Title: Detailed Engineering
6. Index Line No:
7. Approved Changes:
8. System Description:
9. Budget and Reporting Number:

---

10. Element Task Description:

    a) Cost Content: A/E Contract

    b) Technical Content: Provide Definitive Design of the M-91-03 TRU/TRUM Waste Project. Provide Construction Engineering and Inspection.

    c) Work Statement: Provide design for construction of the M-91-03 TRU/TRUM Waste facilities, including all site work, utilities, buildings, process equipment, and standard equipment and furnishings. Provide field engineering and inspection services during the construction phase.

PROJECT SUMMARY WORK BREAKDOWN STRUCTURE DICTIONARY
ELEMENT DEFINITION

1. Project Title: M-91 –03 TRU/TRUM Waste
2. Date: February 1, 2000
3. Identification Number:
4. WBS Element Code: 22
5. WBS Element Title: Procurement
6. Index Line No:
7. Approved Changes:
8. System Description:
1. Budget and Reporting Number:

---

2. Element Task Description:

   a) Cost Content: Equipment

   b) Technical Content: Procure Equipment in accordance with applicable drawings and specifications.

   c) Work Statement: Prepare procurement documents and bid packages, evaluate the bids, award the contracts, administer the contracts and provide for warehousing and maintenance of the procured equipment.

PROJECT SUMMARY WORK BREAKDOWN STRUCTURE DICTIONARY
ELEMENT DEFINITION

1. Project Title: M-91-03 TRU/TRUM Waste
2. Date: February 1, 2000
3. Identification Number:
4. WBS Element Code: 23
5. WBS Element Title: Construction
6. Index Line No:
7. Approved Changes:
8. System Description:
9. Budget and Reporting Number:

---

10. Element Task Description:

    a) Cost Content: Construction Contractor

    b) Technical Content: Perform site and facility construction and testing in accordance with approved design media.

    c) Work Statement: Construct the M-91-03 facilities including all site work, utilities, buildings, standard equipment and furnishings. Perform test procedures to verify that construction and equipment conform to the design media.

APPENDIX D

COST AND TECHNOLOGY SELECTION FOR BASIS OF ESTIMATE

Table D-1
Technology Selection for Basis of Estimate - Contact Handled Facility

Processing Step in Figure 3-7	Technology Selected	Basis for Selection	Confidence in Selection and Future Action
Sort/Repack	"Off-the-shelf" material handling equipment i.e. grapple, table, crane, miscellaneous.	Commercially available. Meets functional requirements as presently defined based on available data.	WIPP operating parameters and waste characterization are not fully defined and will be defined during Engineering Studies (see Section 3.2) which may impact technology selection. The selected technology will remain valid but may need to be enhanced or augmented. Final selection will be made during the project conceptual phase.
Size Reduction	"Off-the-shelf" size reduction equipment i.e. band saw, hydraulic shear, plasma arc torch, miscellaneous.	Commercially available. Meets functional requirements as presently defined based on available data.	WIPP operating parameters and waste characterization are not fully defined and will be defined during Engineering Studies (see Section 3.2) which may impact technology selection. The selected technology will remain valid but may need to be enhanced or augmented. Final selection will be made during the project conceptual phase.
PCB Treatment	Molten Salt Oxidation	Technology is developed, capable of high destruction rate efficiencies to meet the 50 ppm limit presently in WIPP WAC, minimal pollution abatement system required, easily scalable, and provides a non-hydrogenous matrix for fixing TRU.	WIPP permit may change to allow acceptance of PCB concentrations > 50 ppm that may be met by use of more simple technology such as solidification. WIPP operating parameters and waste characterization are not fully defined and will be defined during Engineering Studies (see Section 3.2) which may impact technology selection. Final selection will be made during the project conceptual phase using results of the technology Engineering Studies.
Solidification/ Neutralization/ Deactivation of Aqueous Streams	Solidification using portland cement.	Well developed, simple technology. Meets functional requirements as presently defined.	Waste characterization Engineering Study or change in forecast volume may impact selection of the technology. Final selection will be made during the project conceptual phase.

Table D-2
Technology Selection for Basis of Estimate - Remote Handled Facility

Processing Step in Figure 3-8	Technology Selected	Basis for Selection	Confidence in Selection and Future Action
Sort/Repack	"Off-the-shelf" material handling equipment i.e. grapple, table, crane, miscellaneous.	Commercially available. Meets functional requirements as presently defined based on available data.	WIPP operating parameters and waste characterization are not fully defined and will be defined during Engineering Studies (see Section 3.2) and may impact technology selection. The selected technology will remain valid but may need to be enhanced or augmented. Final selection will be made during the project conceptual phase.
Size Reduction	"Off-the-shelf" size reduction equipment i.e. band saw, hydraulic shear, plasma arc torch, manipulator, miscellaneous.	Commercially available. Meets functional requirements as presently defined based on available data.	WIPP operating parameters and waste characterization are not fully defined and will be defined during Engineering Studies (see Section 3.2) which may impact technology selection. The selected technology will remain valid but may need to be enhanced or augmented. Final selection will be made during the project conceptual phase.
Solidification/ Neutralization/ Deactivation of liquids/sludges	Molten Salt Oxidation	Technology is developed, minimal pollution abatement system required, easily scalable, provides a non-hydrogenous matrix for fixing TRU, capable of oxidizing uranium metal to deactivate the potentially reactive waste.	Waste characterization Engineering Study or change in forecast volume may impact selection of the technology. WIPP operating parameters and waste characterization are not fully defined and will be defined during Engineering Studies (see Section 3.2) which may impact technology selection. The selected technology will remain valid but may need to be enhanced or augmented. Final selection will be made during the project conceptual phase.
Assay	NDA system similar to CH system at WRAP. This technology is not developed.	If RH waste operating and certification requirements are similar to CH, then a similar NDA system will need to be developed and is assumed to eventually be available.	Both requirements and technology development are uncertain. Availability of RH NDA system with similar capabilities to CH is at least 3-4 years away. Development of NDA technology that relies on acceptable knowledge is more likely and will impact technology selection. Final selection will be made during the project conceptual phase.

1. ESTIMATE PURPOSE

ORDER OF MAGNITUDE ESTIMATE: THIS ESTIMATE WILL TO BE USED FOR BUDGETING PURPOSES ONLY.

2. ESTIMATE TECHNICAL BASIS

A. THIS ESTIMATE HAS BEEN PREPARED FOR THE WASTE MANAGEMENT HANFORD PROJECT AS REQUESTED BY FFS PROJECT MANAGEMENT.

B. A DESCRIPTION OF THE TECHNICAL SCOPE OF WORK MAY BE FOUND IN THE FOLLOWING REFERENCE DOCUMENTS:
REQUEST FOR ESTIMATE DATED 2/7/00.

E. THIS ESTIMATE UTILIZES AN ESTIMATE WORK BREAKDOWN STRUCTURE WHICH INTERFACES WITH THE M-91-03 TRU/TRUH WASTE RETRIEVAL AND PROCESSING PROJECT AS LISTED BELOW:

WBS #	DESCRIPTION	WBS #	DESCRIPTION	WBS #	DESCRIPTION
1	PROJECT SUPPORT (EXPENSE)	2	FACILITY (CAPITAL)	22A	PROCUREMENT CH FAC.
11	PROJECT INTEGRATION	21	DETAILED ENGINEERING	22B	PROCUREMENT RH FAC.
12	CONCEPTUAL ENGINEERING	21A	ENGINEERING CH FACILITY	22C	PROCUREMENT RETRIEVAL
13	ENVIRONMENTAL, SAFETY & QA	21B	ENGINEERING RH FACILITY	23	CONSTRUCTION
14	ORR & STARTUP	21C	ENGINEERING RETRIEVAL	23A	CONSTRUCTION CH FAC.
15	ENGINEERING STUDIES/FDC	22	PROCUREMENT	23B	CONSTRUCTION RH FAC

F. THIS ESTIMATE ALSO UTILIZES A STANDARD FDNW DEFINED CODE OF ACCOUNTS.

3. ESTIMATE METHODOLOGY

A. DIRECT COSTS:
A PARAMETRIC TECHNIQUE,TREND AND COST FROM PAST AND EXISTING PROJECTS HAS BEEN UTILIZED IN THE PREPARATION OF THIS ESTIMATE.

(1) CONSTRUCTION LABOR, MATERIAL AND EQUIPMENT UNITS HAVE BEEN ESTIMATED BASED UPON ONE OR MORE OF THE FOLLOWING STANDARD DATABASES, IN HOUSE DATABASES,R.S. MEANS,(NECA) MANUAL OF LABORS UNITS AND NATIONAL ELECTRICAL CONTRACTORS. SITE, OR OTHER IDENTIFIED PROJECT OR SPECIAL CONDITIONS.

(2) FLUOR DANIEL HANFORD & PROJECT HANFORD MANAGEMENT CONTRACT (PHMC) SUBCONTRACTOR DIRECT COSTS FOR WASTE MANAGEMENT HANFORD HAVE BEEN PROVIDED BY FDNW PROJECT MANAGEMENT FOR INCLUSION INTO THIS ESTIMATE.

B. DIRECT COST FACTORS:
(1) SALES TAX HAS BEEN APPLIED TO ALL MATERIALS AND EQUIPMENT PURCHASES AT 8%.

(2) CONTRACT ADMINISTRATION FACTOR OF 18.75% HAS BEEN APPLIED TO THE DIRECT CONTRACT VALUE WHICH INCLUDES COSTS FOR BID PACKAGE PREPARATION, CONTRACT MANAGEMENT & ADMINISTRATION AND PROJECT MANAGEMENT & PLANNING SUPPORT

C. INDIRECT COSTS:
FIXED PRICE CONTRACTOR OVERHEAD, PROFIT, BOND AND INSURANCE COSTS HAVE BEEN APPLIED ARE THE FOLLOWING PERCENTAGES:
LABOR =26.5% EQUIPMENT USE =10%, MATERIAL =26.5%, SUBCONTRACT =10%, AND EQUIPMENT =10% , AND ARE REFLECTED IN THE "OH&P/B&I" COLUMN OF THE ESTIMATE DETAIL REPORT.

D. RATES:
(1) FOR ESTIMATING PURPOSES, AVERAGE FDNW RATES BY OPERATIONS CODE HAVE BEEN DEVELOPED BASED UPON RECENT COST HISTORY AND ADJUSTED TO REFLECT INDUSTRY AVERAGE AE.CM RATES.

E. SITE ALLOCATIONS FACTORS:
SITE ALLOCATION FACTORS ARE DEVELOPED AND PROVIDED BY FLUOR DANIEL HANFORD (FDH) FOR ESTIMATING USE.
(1) GOVERNMENT FURNISHED SERVICES (GFS): APPLIED TO ALL COSTS TO LIQUIDATE GOVERNMENT FURNISHED SERVICES PROVIDED BY THE ENTERPRISE COMPANIES, 1% FOR FLUOR FEDERAL SERVICES.

(2) HANFORD SITE GENERAL ADMINISTRATIVE (G&A) AND SHARED SERVICES: APPLIED TO ALL COSTS TO LIQUIDATE THE COST OF HANFORD GENE ADMINISTRATIVE SERVICES AND SHARES,(ie WATER, POWER AND ROADS 12.83%.

THE ABOVE FACTORS ARE APPLIED TO ESTIMATED COSTS AS SHOWN:

(1) FDH GFS/G&A/SS CONST. MGMT: @ 13.37%.

(2) FDH SUBCONTRACT - G&A/FEE RATE 12.30% APPLIED TO FIXED PRICE SUBCONTRACTS.

(3) FDH GFS/G&A/SS - LABOR: 13.37% .

4. ESCALATION

ESCALATION PERCENTAGES WERE CALCULATED FROM THE JANUARY 1999 UPDATE OF THE ECONOMIC ESCALATION PRICE CHANGE INDICES FOR DOE CONSTRUCTION PROJECTS AS PUBLISHED BY THE "OFFICE OF PROJECT AND FIXED ASSET MANAGEMENT."

5. CONTINGENCY

A. DEFINITION OF CONTINGENCY AS PROVIDED BY DOE

"CONTINGENCY COVERS COSTS THAT MAY RESULT FROM INCOMPLETE DESIGN, UNFORESEEN AND UNPREDICTABLE CONDITIONS, OR UNCERTAINTIES WITHIN THE DEFINED PROJECT SCOPE. THE AMOUNT OF CONTINGENCY WILL DEPEND ON THE STATUS OF DESIGN, PROCUREMENT, AND CONSTRUCTION; AND THE COMPLEXITY AND UNCERTAINTIES OF THE COMPONENT PARTS OF THE PROJECT. CONTINGENCY IS NOT TO BE USED TO AVOID MAKING AN ACCURATE ASSESSMENT OF EXPECTED COST" (OFFICE OF WASTE MANAGEMENT (EM-30) COST AND SCHEDULE GUIDE.

B. CONTINGENCY ALLOWANCE GUIDELINES

THE DOE GUIDELINE CONTINGENCY ALLOWANCE FOR A PLANNING ESTIMATE - STANDARD =20%-30% EXCEPT FOR EXPERIMENTAL/SPECIAL CONDITIONS = UP TO 50%

C. METHODOLOGY

CONTINGENCY IS EVALUATED AT THE LOWEST WORK BREAKDOWN STRUCTURE (WBS) LEVEL WITHIN THE COST ESTIMATE DETAILS. IT IS SUMMARIZED AT UPPER WBS LEVELS AND REPORTED ON THE SUMMARY REPORTS.

D. ANALYSIS

AN ASSESSMENT OF DESIGN MATURITY, WORK COMPLEXITY AND PROJECT UNCERTAINTIES HAS BEEN PERFORMED. AN EXPLANATION OF THIS ASSESSMENT AND CONTINGENCY RATES, WHICH HAVE BEEN ADDED TO THE COST OF WORK ARE AS FOLLOWS:

D. ANALYSIS

WBS (11 ENGINEERING)	A CONTINGENCY OF 20% HAS BEEN APPLIED DUE TO NO STUDIES,FDC,CDR,SYSTEM ENGINEERING HAS BEEN COMPLETED AT THIS TIME.
WBS (12 ENGINEERING AND INSPECTION)	A CONTINGENCY OF 20% HAS BEEN APPLIED DUE TO NO STUDIES,FDC,CDR,SYSTEM ENGINEERING HAS BEEN COMPLETED AT THIS TIME
WBS (22A,22B,22C PROCUREMENT)	A CONTINGENCY OF 28% HAS BEEN APPLIED DUE TO NO STUDIES,FDC,CDR,SYSTEM ENGINEERING, EQUIPMENT ANALYSIS HAS BEEN COMPLETED AT THIS TIME.
WBS (23A,23B,23C CONSTRUCTION)	A CONTINGENCY OF 35% HAS BEEN USED DUE TO NO ENGINEERING STUDIES, FDC, CDR, DD, EQUIPMENT ANALYSIS HAS BEEN COMPLETED AT THIS TIME.
WBS (50 OTHER PROJECT COST)	A CONTINGENCY OF 15% HAS BEEN APPLIED OTHER PROJECT COST DUE TO THE IMPACT OF ITEMS ABOVE.

PROJECT OVERALL CONTINGENCY AVERAGE IS 25 PERCENT.

6. ROUNDING

THE PROJECT COST SUMMARY REPORT IS SUMMARIZED AND ADJUSTED/ROUNDED AS FOLLOWS:
THE ESCALATED TOTAL COST COLUMN, CONTINGENCY TOTAL COLUMN AND TOTAL DOLLARS COLUMN SUB-TOTALS ARE SUMMARIZED BY CONTRACTOR. THE COLUMN SUBTOTALS ARE ADJUSTED/ROUNDED TO THE NEAREST $1,000/$10,000. THE PROJECT TOTAL SUMMARY LINE TOTALS ARE ADJUSTED/ROUNDED TO THE NEAREST $10,000.

7. REMARKS

MAJOR ASSUMPTIONS WHICH HAVE BEEN MADE IN THE PREPARATION OF THIS ESTIMATE ARE AS FOLLOWS:

A.) PLUMBING AND FIRE PROTECTION COMBINED COST OF $7.75/SF ($4.50 - PLUMBING, $3.25 - F.P.)

B.) COSTS FOR CONVEYORS,SORTING TABLES,CEMENT LOADING, CONCRETE MIXING, COMPRESSOR AND BLOWER CAME FROM ESTIMATE Z643SAA1, H-91 LLM FACILITY.DATED 1/19/99.

C.) BAND SAW COSTS CAME FROM MSC INDUSTRIAL SUPPLY CO. PRICE SHEET.

D.) PIPE SHEAR COST WAS A QUOTE FROM SWEED MACHINERY, INC., CORY GRAPER, 800-888-1352 EXT 103.

E.) MOLTEN SALT OXIDATION (MSO) SO COSTS WERE FROM PRICE QUOTE FROM MOLTEN SALT OXIDATION CORP, FRANK TERMINE 888-818-5467.

F.) PLASMA CUTTING TORCH COST FROM GARY ANDERSON AT OXARC IN PASCO.

G.) MANIPULATOR COSTS CAME FROM PREVIOUS PRICE QUOTE FROM PAR SYSTEMS, MARK PRICE 949-360-6186.

H.) ZONES WERE ASSUMED AT 8 AIR CHANGES PER HOUR.

I.) GENERAL AREAS IN BUILDING WERE ASSUMED TO REQUIRE 4 AIR CHANGES PER HOUR.

J.) TRUCK TRAILER AND 20 TON CRANE COSTS PER QUOTES FROM MFS, DAN 800-999-8886 AND ANDREWS EQUIPMENT, MIKE 800-755-1446.

K.) COSTS FOR THE 9000 LB FORKLIFT, 14 TON FORKLIFT, 3 CY BACKHOE AND 5 CY FRONT END LOADER WERE QUOTED BY WESTERN STATES 800-541-1234.

L.) 10 TON BRIDGE CRANE WITH 70 FT SPAN COST WAS BASED ON EARLIER PRICE QUOTE FROM AMERICAN CRANE 610-385-6061.

M.) VACUUM SYSTEM FOR CH & RH FACILITIES IS A MANUAL,OFF OF SHELF ITEM.

N.) COMPRESSOR WILL BE USED FOR BREATHING/PLANT AIR.

O.) ASSUME SITE WORK PER ELECTRICAL UTILITIES TRANSFORMER FEEDER 1000' 2" CND.W/#16 15KV CABLE.

P.) ASSUME CONDUITS (CND) FOR TELEPHONE AND HLAN SAME FOR EACH UNIT.

Q.) ASSUME SWITCH GEAR @ 1200 AMPS WITH A 3P-600 C.B. (CH), 3P-600 C.B. (RH),AND 3P-400 C.B. (TRAILER).

R.) AREA LIGHTING 10 LIGHT POLES WITH FIXTURES AND A 1000' OF CND/WIRE.

S.) CH FACILITY ASSUME 600A 480V SERVICE WITH A 100' FEEDER FROM SITE SWGR AND 225A 120/208 SERVICE. ALL OTHER ELECTRICAL REQUIRED LIGHTING @ 100FC, RECPTACLES,TELEPHONE CND,FIRE DETECTION SYSTEM, EQUIPMENT CONNECTIONS ARE A SM COST. THE SPECIAL EQUIPMENT PWR AND INSTRUMENTATION CONNECTIONS IS PER EACH.

T.) RH FACILITY ASSUME 600A 480V SERVICE WITH A 100' FEEDER FROM SITE SWGR AND 225A 120/208 SERVICE. ALL OTHER ELECTRICAL REQUIRED LIGHTING @ 100FC,RECEPTACLES,TELEPHONE CND,FIRE DETECTION SYSTEM EQUIPMENT CONNECTIONS ARE A SM COST. THE SPECIAL EQUIPMENT PW AND INSTRUMENTATION CONNECTIONS IS PER EACH.

T.) MOBILE OFFICE FACILITYS ASSUME 400A 480V SERVICE WITH A 100' FEEDER FROM SITE SWGR AND 800A 120/208 SERVICE USING FOUR DISCONN SWITCHES FOR 2 SETS OFFICES EACH AND HOOKUPS. TELEPHONE CND FOR LMSI INSTALLED TELEPHONE SERVICE.

1 - 4

FLUOR FEDERAL SERVICES, INC.
WASTE MANAGEMENT HANFORD
JOB NO. 65100741/A142
FILE NO. Z75BSAA3

** IEST - INTERACTIVE ESTIMATING **
CH & RH TRU/TRUH WASTE HANDLING FACILITY
ROUGH ORDER OF MAGNITUDE
DOE_R01,- PROJECT COST SUMMARY

PAGE 5 OF 12
DATE 03/10/00 13:01:18
BY JLG/RWO/KLR/DKH

COST CODE	DESCRIPTION	ESCALATED TOTAL COST	CONTINGENCY %	CONTINGENCY TOTAL	TOTAL DOLLARS
000	ENGINEERING	4,773,000	20	955,000	5,728,000
460	IMPROVEMENTS TO LAND	700,000	35	245,000	945,000
501	BUILDINGS	12,583,000	34	4,268,000	16,851,000
600	ELECTRIC TRANSMISSION SYSTEMS	1,112,000	35	389,000	1,501,000
650	WATER SUPPLY	383,000	35	134,000	517,000
703	MECHANICAL EQUIPMENT	1,875,000	30	558,000	2,433,000
704	PACKAGED EQUIPMENT	143,000	35	50,000	193,000
705	PIPING	285,000	35	100,000	385,000
706	ELECTRICAL/INSTRUMENTTATION	253,000	34	86,000	339,000
861	HEAVY MOBILE EQUIP	580,000	20	116,000	696,000
	(ADJUSTED/ROUNDED)	13,000		(1,000)	12,000
TOTAL ESTIMATED CONSTRUCTION COST (TECC)		22,700,000	30	6,900,000	29,600,000
900	OTHER PROJECT COSTS	12,585,000	15	1,888,000	14,473,000
	(ADJUSTED/ROUNDED)	15,000		12,000	27,000
TOTAL OTHER PROJECT COSTS (OPC)		12,600,000	15	1,900,000	14,500,000
TOTAL PROJECT COST (TPC)		35,300,000	25	8,800,000	44,100,000

TYPE OF ESTIMATE	STUDY	MARCH 10, 2000	
FDNW LEAD ESTIMATOR	JL GEIGER	ESTIMATING MANAGER	FC DAY
PROJECT MANAGER	TA CARLSON		
CLIENT			

REMARKS:

(ROUNDED/ADJUSTED TO THE NEAREST " 1,000 / 10,000 " - PERCENTAGES NOT RECALCULATED TO REFLECT ROUNDING)

FLUOR FEDERAL SERVICES, INC.
WASTE MANAGEMENT HANFORD
JOB NO. 65100741/A142
FILE NO. 2758SAA3

** IEST - INTERACTIVE ESTIMATING **
CH & RH TRU/TRUM WASTE HANDLING FACILITY
ROUGH ORDER OF MAGNITUDE
DOE_R02 - WORK BREAKDOWN STRUCTURE SUMMARY

DATE 03/10/00 13:36:23
BY JLG/RWO/KLR/DKN

WBS	DESCRIPTION	DIRECT SUBTOTAL	INDIRECTS	SUB TOTAL	ESCALATION %	ESCALATION TOTAL	SUB TOTAL	CONTINGENCY %	CONTINGENCY TOTAL	TOTAL DOLLARS
110	PROJECT INTEGRATION	2832000	348336	3180336	9.37	297997	3478333	15	521750	4000083
120	CONCEPTUAL ENGINEERING	1800000	104550	1904550	6.76	128711	2033261	15	304989	2338250
130	ENVIRONMENTAL, SAFETY & QA	2600000	347620	2947620	11.28	332491	3280111	15	492016	3772128
140	ORR & STARTUP	2108000	272568	2380568	11.28	268528	2649096	15	397364	3046460
150	ENG STUDIES/FDC	1000000	123000	1123000	1.87	21000	1144000	15	171600	1315600
SUBTOTAL 1	PROJECT SUPPORT (EXPENSE)	10340000	1196074	11536074	9.09	1048728	12584802	15	1887720	14472522
21A	ENGINEERING CH FACILITY	1205947	161235	1367182	15.32	209433	1576615	20	315323	1891938
21B	ENGINEERING RH FACILITY	2396975	320475	2717450	15.32	416258	3133709	20	626741	3760451
21C	ENGINEERING RETRIEVAL	48678	6508	55186	14.10	7781	62967	20	12593	75561
SUBTOTAL 21	ENGINEERING	3651600	488218	4139818	15.30	633473	4773292	20	954658	5727950
22A	PROCUREMENT CH FACILITY	521640	13601	535241	16.23	86869	622111	25	155527	777639
22B	PROCUREMENT RH FACILITY	2988726	82707	3071433	16.23	498493	3569926	30	1075486	4645412
22C	PROCUREMENT RETRIEVAL	486000	12672	498672	16.23	80934	579607	20	115921	695528
SUBTOTAL 22	PROCUREMENT	3996366	108981	4105347	16.23	666297	4771645	28	1346935	6118580
23A	CONSTRUCTION CH RETRIEVAL	3500918	1174798	4675716	18.16	849110	5524826	35	1933689	7458516
23B	CONSTRUCTION RH FACILITY	5001443	1444054	6445497	18.16	1170502	7615999	35	2665599	10281599
SUBTOTAL 23	CONSTRUCTION	8502361	2618853	11121214	18.16	2019612	13140826	35	4599289	17740115
SUBTOTAL 2	FACILITY (CAPITAL)	16150327	3216053	19366380	17.14	3319383	22685764	30	6900883	29586647
PROJECT TOTAL		26,490,327	4,412,127	30,902,454	14.14	4,368,112	35,270,566	25	8,788,603	44,059,170

FLUOR FEDERAL SERVICES, INC.
WASTE MANAGEMENT HANFORD
JOB NO. 65100741/A142
FILE NO. Z758SAA3

** IEST - INTERACTIVE ESTIMATING **
CH & RH TRU/TRUM WASTE HANDLING FACILITY
ROUGH ORDER OF MAGNITUDE
DOE_R04 - COST CODE ACCOUNT SUMMARY

DATE 03/10/00 13:40:03
BY JLG/RWO/KLR/DKH

COST CODE/WBS	DESCRIPTION	DIRECT SUBTOTAL	INDIRECTS	SUB TOTAL	ESCALATION %	ESCALATION TOTAL	SUB TOTAL	CONTINGENCY %	CONTINGENCY TOTAL	TOTAL DOLLARS
000	ENGINEERING									
21A	ENGINEERING CH FACILITY	1205947	161235	1367182	15.32	209433	1576615	20	315323	1891938
21B	ENGINEERING RH FACILITY	2396975	320475	2717450	15.32	416258	3133709	20	626741	3760451
21C	ENGINEERING RETRIEVAL	48678	6508	55186	14.10	7781	62967	20	12593	75561
TOTAL 000	ENGINEERING	3651600	488218	4139818	15.30	633473	4773292	20	954658	5727950
460	IMPROVEMENTS TO LAND									
23A	CONSTRUCTION CH RETRIEVAL	221733	74406	296139	18.16	53778	349918	35	122471	472390
23B	CONSTRUCTION RH FACILITY	221733	74406	296139	18.16	53778	349918	35	122471	472390
TOTAL 460	IMPROVEMENTS TO LAND	443466	148813	592279	18.16	107557	699837	35	244943	944780
501	BUILDINGS									
22A	PROCUREMENT CH FACILITY	367200	9574	376774	16.23	61150	437925	25	109481	547406
22B	PROCUREMENT RH FACILITY	1619244	42221	1661465	16.23	269655	1931121	30	583844	2514966
23A	CONSTRUCTION CH RETRIEVAL	2766445	928332	3694777	18.16	670971	4365749	35	1528012	5893761
23B	CONSTRUCTION RH FACILITY	3878132	1071190	4949322	18.16	898796	5848119	35	2046841	7894961
TOTAL 501	BUILDINGS	8631021	2051319	10682340	17.79	1900575	12582915	34	4268179	16851095
615	ELECTRIC TRANSMISSION SYSTEMS									
23A	CONSTRUCTION CH RETRIEVAL	352193	118184	470377	18.16	85420	555798	35	194529	750328
23B	CONSTRUCTION RH FACILITY	352193	118184	470377	18.16	85420	555798	35	194529	750328
TOTAL 615	ELECTRIC TRANSMISSION SYSTEM	704386	236369	940755	18.16	170841	1111597	35	389059	1500656
650	WATER SUPPLY									
23A	CONSTRUCTION CH RETRIEVAL	121330	40714	162044	18.16	29427	191471	35	67015	258486
23B	CONSTRUCTION RH FACILITY	121330	40714	162044	18.16	29427	191471	35	67015	258486
TOTAL 650	WATER SUPPLY	242660	81429	324089	18.16	58854	382943	35	134030	516973

FLUOR FEDERAL SERVICES, INC.
WASTE MANAGEMENT HANFORD
JOB NO. 65100741/A142
FILE NO. Z758SAA3

** IEST - INTERACTIVE ESTIMATING **
CH & RH TRU/TRUM WASTE HANDLING FACILITY
ROUGH ORDER OF MAGNITUDE
DOE_R04 - COST CODE ACCOUNT SUMMARY

COST CODE/WBS	DESCRIPTION	DIRECT SUBTOTAL	INDIRECTS	SUB TOTAL	ESCALATION %	ESCALATION TOTAL	SUB TOTAL	CONTINGENCY %	CONTINGENCY TOTAL	TOTAL DOLLARS
703	MECHANICAL EQUIPMENT									
22A	PROCUREMENT CH FACILITY	154440	4027	158467	16.23	25719	184186	25	46046	230232
22B	PROCUREMENT RH FACILITY	1333761	34777	1368538	16.23	222113	1590652	30	477195	2067848
23A	CONSTRUCTION CH RETRIEVAL	39217	13160	52377	18.16	9511	61888	35	21661	83549
23B	CONSTRUCTION RH FACILITY	27583	5171	32754	18.16	5948	38703	35	13546	52249
TOTAL 703	MECHANICAL EQUIPMENT	1555001	57136	1612137	16.33	263293	1875430	30	558449	2433880
704	PACKAGED EQUIPMENT									
23B	CONSTRUCTION RH FACILITY	90640	30415	121055	18.16	21983	143039	35	50063	193103
TOTAL 704	PACKAGED EQUIPMENT	90640	30415	121055	18.16	21983	143039	35	50063	193103
705	PIPING									
23B	CONSTRUCTION RH FACILITY	180290	60499	240789	18.16	43727	284517	35	99580	384098
TOTAL 705	PIPING	180290	60499	240789	18.16	43727	284517	35	99580	384098
706	ELECTRICAL/INSTRUMENTTATION									
22B	PROCUREMENT RH FACILITY	35721	5707	41428	16.23	6723	48152	30	14445	62597
23B	CONSTRUCTION RH FACILITY	129542	43470	173012	18.16	31419	204431	35	71550	275982
TOTAL 706	ELECTRICAL/INSTRUMENTTATION	165263	49177	214440	17.79	38142	252583	34	85996	338580
861	HEAVY MOBILE EQUIP									
22C	PROCUREMENT RETRIEVAL	486000	12672	498672	16.23	80934	579607	20	115921	695528
TOTAL 861	HEAVT MOBILE EQUIP	486000	12672	498672	16.23	80934	579607	20	115921	695528
900	OTHER PROJECT COSTS									

FLUOR FEDERAL SERVICES, INC.
WASTE MANAGEMENT HANFORD
JOB NO. 65100741/A142
FILE NO. 2758SAA3

** IEST - INTERACTIVE ESTIMATING **
CH & RH TRU/TRUM WASTE HANDLING FACILITY
ROUGH ORDER OF MAGNITUDE
DOE_R04 - COST CODE ACCOUNT SUMMARY

DATE 03/10/00 13:40:03
BY JLG/RWO/KLR/DKN

COST CODE/WBS	DESCRIPTION	DIRECT SUBTOTAL	INDIRECTS	SUB TOTAL	ESCALATION %	ESCALATION TOTAL	SUB TOTAL	CONTINGENCY %	CONTINGENCY TOTAL	TOTAL DOLLARS
110	PROJECT INTEGRATION	2832000	348336	3180336	9.37	297997	3478333	15	521750	4000083
120	CONCEPTUAL ENGINEERING	1800000	104550	1904550	6.76	128711	2033261	15	304989	2338250
130	ENVIRONMENTAL, SAFETY & QA	2600000	347620	2947620	11.28	332491	3280111	15	492016	3772128
140	ORR & STARTUP	2108000	272568	2380568	11.28	268528	2649096	15	397364	3046460
150	ENG STUDIES/FDC	1000000	123000	1123000	1.87	21000	1144000	15	171600	1315600
TOTAL 900	OTHER PROJECT COSTS	10340000	1196074	11536074	9.09	1048728	12584802	15	1887720	14472522
PROJECT TOTAL		26,490,327	4,412,127	30,902,454	14.14	4,368,112	35,270,566	25	8,788,603	44,059,170

FLUOR FEDERAL SERVICES, INC.
WASTE MANAGEMENT HANFORD
JOB NO. 65100741/A142
FILE NO. Z758SAA3

** IEST - INTERACTIVE ESTIMATING **
CH & RH TRU/TRUM WASTE HANDLING FACILITY
ROUGH ORDER OF MAGNITUDE
DOE_R05 - ESTIMATE SUMMARY BY CSI DIVISION

CSI/CCA	DESCRIPTION	DIRECT SUBTOTAL	INDIRECTS	SUB TOTAL	ESCALATION %	ESCALATION TOTAL	SUB TOTAL	CONTINGENCY %	CONTINGENCY TOTAL	TOTAL DOLLARS
ENGINEERING										
90	HOME OFFICE	3651600	488218	4139818	15.30	633473	4773292	20	954658	5727950
TOTAL ENGINEERING		3,651,600	488,218	4,139,818	15.30	633,473	4,773,292	20	954,658	5,727,950
CONSTRUCTION										
02	SITE PREPARATION	686126	230242	916368	18.16	166412	1082780	35	378973	1461754
13	CONCRETE PLACEMENT	792381	148571	940952	18.16	170876	1111829	35	389140	1500969
25	LADDER PLATFORM WALKWAYS	2639	885	3524	18.16	640	4164	35	1457	5622
32	PRE-FAB BUILDINGS	1739271	536411	2275682	18.16	413263	2688945	35	941131	3630077
35	SASH, DOORS, LOUVERS, GLAZING	624625	143978	768603	18.16	139578	908181	35	317863	1226045
39	HVAC	1189240	399071	1588311	18.16	288437	1876749	35	656862	2533611
42	SHOP FAB TANKS/VESSELS	19173	6433	25606	18.16	4650	30257	35	10589	40847
47	OTHER PROCESS EQUIPMENT	1685238	100840	1786078	16.51	294880	2080958	30	630384	2711343
48	MATERIAL HANDLING EQUIPMENT	2774142	165707	2939849	16.49	484914	3424763	28	975885	4400648
50	PIPING	621783	208650	830433	18.16	150806	981240	35	343434	1324675
60	ELECTRICAL	2297168	770857	3068025	18.16	557153	3625179	35	1268812	4893992
71	INSTRUMENTS	66941	16183	83124	17.20	14295	97420	33	31689	129110
90	HOME OFFICE	3550000	347620	3897620	9.86	384361	4281981	15	642297	4924278
99	OTHER COST AND FEES	6790000	848454	7638454	8.70	664366	8302820	15	1245423	9548244
TOTAL CONSTRUCTION		22,838,727	3,923,908	26,762,635	13.95	3,734,638	30,497,274	26	7,833,945	38,331,219
PROJECT TOTAL		26,490,327	4,412,127	30,902,454	14.14	4,368,112	35,270,566	25	8,788,603	44,059,170

FLUOR DANIEL NORTHWEST, INC.
WASTE MANAGEMENT HANFORD
JOB NO. 65100741/A142
FILE NO. Z758SAA2

** IEST - INTERACTIVE ESTIMATING **
CH & RH TRU/TRUH WASTE HANDLING FACILITY
ROUGH ORDER OF MAGNITUDE
PHMCR06 - SITE ALLOCATIONS BY WBS

WBS	DESCRIPTION	ESTIMATE SUBTOTAL	DYN EQ.USAGE	FDH GFS/G&A CONST.MGMT	FDH MPR F.P./S.C.	FDH GFS/G&A LABOR	FDH MPR/G&A MATERIAL	SITE ALLOC SUBTOTAL
110210	DEFINITIVE DESIGN	3000078	0	0	0	401110	0	401110
SUBTOTAL 1102	DEFINITIVE DESIGN	3000078	0	0	0	401110	0	401110
SUBTOTAL 11	DEFINITIVE DESIGN	3000078	0	0	0	401110	0	401110
120210	ENGINEERING & INSPECTION	1300050	0	0	0	173816	0	173816
SUBTOTAL 1202	E&I DURING CONSTRUCTION	1300050	0	0	0	173816	0	173816
SUBTOTAL 12	ENGINEERING & INSPECTION	1300050	0	0	0	173816	0	173816
3A0110	BACKHOE	148500	0	3722	18265	0	0	21988
3A0130	FORKLIFT	100980	0	2531	12420	0	0	14951
3A0150	GUZZLER	237600	0	5956	29224	0	0	35181
3A0170	TRACTOR W/2 40' TRLRS	35640	0	893	4383	0	0	5277
3A0180	WATER TRUCK	11880	0	297	1461	0	0	1759
SUBTOTAL 3A01	RETRIEVAL AREA	534600	0	13401	65755	0	0	79157
3A0200	PRE-FAB METAL BUILDING	825001	0	20681	101475	0	0	122156
3A0210	AIR LOCK	58294	0	1461	7170	0	0	8631
3A0220	CRANE 20 TON	142560	0	3573	17534	0	0	21108
3A0230	CRANE 10 TON	100980	0	2531	12420	0	0	14951
3A0240	HVAC	653400	0	16379	80368	0	0	96748
SUBTOTAL 3A02	CH BUILDING	1780235	0	44628	218968	0	0	263597
3A0320	DECON FACILITY	5940	0	148	730	0	0	879
3A0330	ROLLOR CONVEYOR	95040	0	2382	11689	0	0	14072
3A0340	COILING DOOR	23760	0	595	2922	0	0	3518
SUBTOTAL 3A03	MATERIAL STORAGE AREA	124740	0	3127	15343	0	0	18470
3A0420	BAND SAW	42775	0	1072	5261	0	0	6333
3A0430	PIPE SHEAR	66535	0	1667	8183	0	0	9851

FLUOR FEDERAL SERVICES, INC.
WASTE MANAGEMENT HANFORD
JOB NO. 65100741/A142
FILE NO. 2758SAA3

** IEST - INTERACTIVE ESTIMATING **
CH & RH TRU/TRUM WASTE HANDLING FACILITY
ROUGH ORDER OF MAGNITUDE
DOE_R07 - ONSITE INDIRECT COSTS BY WBS

PAGE 12 OF 12
DATE 03/10/00 13:02:00
BY JLG/RWO/KLR/DKH

WBS	DESCRIPTION	DIRECT SUBTOTAL	CONSTRUCTION %	CONSTRUCTION MGMT/ADMIN TOTAL	DYNCORP EQUIP	SITE INDIRECTS	TOTAL INDIRECTS
110	PROJECT INTEGRATION	2832000	0.00	0	0	348336	348336
120	CONCEPTUAL ENGINEERING	1800000	0.00	0	0	104550	104550
130	ENVIRONMENTAL, SAFETY & QA	2600000	0.00	0	0	347620	347620
140	ORR & STARTUP	2108000	0.00	0	0	272568	272568
150	ENG STUDIES/FDC	1000000	0.00	0	0	123000	123000
21A	ENGINEERING CH FACILITY	1205947	0.00	0	0	161235	161235
21B	ENGINEERING RH FACILITY	2396975	0.00	0	0	320475	320475
21C	ENGINEERING RETRIEVAL	48678	0.00	0	0	6508	6508
22A	PROCUREMENT CH FACILITY	521640	2.30	11997	0	1604	13601
22B	PROCUREMENT RH FACILITY	2988726	2.30	68740	0	13966	82707
22C	PROCUREMENT RETRIEVAL	486000	2.30	11178	0	1494	12672
23A	CONSTRUCTION CH RETRIEVAL	3500918	18.75	656422	0	518376	1174798
23B	CONSTRUCTION RH FACILITY	5001443	18.75	937770	0	506283	1444054
PROJECT TOTAL		26,490,327		1,686,109	0	2,726,018	4,412,127

TOTAL PROJECT COST BY FISCAL YEAR ($K)

	Fiscal Year	*I*	*II*	*III*	*IV*	*V*	*VI*	*VII*	*VIII*	*Total*
CH Facility	Project Integration (11)	127	127	127	127	197	247	247	205	1,404
	Enginering Studies/FDC(12)	685	435							1,120
	Conceptual Engineering (13)		265	405	100	50				820
	E S &QA (14)		60	241	241	241	241	241	60	1,326
	ORR& Startup (15)								1,070	1,070
	Total Project Support	812	887	773	468	488	488	488	1,336	5,740
	Detailed Engineering (21)					620	845	340	90	1,895
	Procurement (22)					140	420	210		770
	Contruction (23)						1,865	4,475	1,120	7,460
	Total Capital	0	0	0	0	760	3,130	5,025	1,210	10,125
	Total CH Facility	**812**	**887**	**773**	**468**	**1,248**	**3,618**	**5,513**	**2,546**	**15,865**
RH Facility	Project Integration (11)	235	235	235	235	364	456	456	380	2,596
	Enginering Studies/FDC(12)	435	435							870
	Conceptual Engineering (13)		535	835	100	50				1,520
	ORR& Startup (15)								1,980	1,980
	E S &QA (14)		111	445	445	445	445	445	111	2,446
	Total Project Support	670	1,316	1,515	780	859	901	901	2,471	9,412
	Detailed Engineering (21)					1,230	1,685	680	170	3,765
	Procurement (22)					845	2,535	1,270		4,650
	Contruction (23)						2,575	6,170	1,545	10,290
	Total Capital	0	0	0	0	2,075	6,795	8,120	1,715	18,705
	Total RH Facility	**670**	**1,316**	**1,515**	**780**	**2,934**	**7,696**	**9,021**	**4,186**	**28,117**
Retrieval System	Detailed Engineering (21)			80						80
	Procurement (22)				700					700
	Total Retrieval System			**80**	**700**	**0**	**0**	**0**	**0**	780
										0
Total Projects		**1,482**	**2,204**	**2,368**	**1,948**	**4,182**	**11,313**	**14,533**	**6,732**	**44,762**

APPENDIX E

AGREEMENT ACTION PLAN COMPLIANCE MATRIX

Compliance Matrix for M-91-03 Project Management Plan.

PMP Subsection Described in Agreement Action Plan, Section 11.5	Corresponding PMP Section
Project Goals and Objectives: a brief and concise statement documenting project objectives and requirements	1.1,1.2
Background: A description of key history, considerations, actions, and decisions leading to establishment of the project schedule. Elements will include the following:	2.0
(i) Physical information covering each identifiably different waste stream component (e.g., current inventories, component generation projections, and component characterization data	2.1
(ii) Discussion of current commercial disposition activities if any	2.3
(iii) A discussion of component and stream stability, and known and suspected instances of contamination migration	2.2
(iv) A summary of (and appropriate citation for) any earlier evaluation of management and disposition options for each waste stream	2.0
(v) A discussion of specific applicable regulatory requirements, and expected impacts to the project	2.4
Project Scope: A concise definition of the project including:	
(i) A description of facility(s)/unit(s) clearly delineating the physical boundaries of the project	3.4.7
(ii) A description of the planned approach (i.e., actions) clearly delineating the action boundaries of the project	3.2
(iii) A top-level work breakdown structure (WBS) with an appended WBS dictionary which includes a brief description of each WBS element	4.1, Appendix C
(iv) Projected TSD capability relevant to management and disposition of each component. Capability information will include performance specification requirements and projected capacity needs	3.4.7
Project Constraints, including established Agreement milestones: A concise description of externally established schedule requirements (e.g., performance specifications, specified start date(s), finish date(s), or logical relationship) with an identification of their source(s) for the project.	5.0
Schedule and Critical Path analysis: A logic-tied life-cycle schedule including major and interim milestones for the top-level work breakdown structure (WBS) and the project critical path. This is typically displayed as a milestone and critical path item listing and as an appended GANT chart.	4.2

Compliance Matrix for M-91-03 Project Management Plan.

PMP Subsection Described in Agreement Action Plan, Section 11.5	Corresponding PMP Section
Key Deliverables/Products: A description of key deliverables and products resulting from each top-level WBS element including critical performance parameters.	6.0
Performance Measurement: Documentation and description of specific performance measures (e.g., milestones and accomplishments) necessary to assess progress toward achieving project and management plan objectives.	7.0
Project Control: Identification of requirements and a summary description of the approach for each of the following:	8.0
(i) Project interface control (i.e., Site-Wide Systems Engineering); and,	8.1
(ii) Reporting and notification requirements and processes.	8.2
Change Management: Identification of change control requirements (e.g., thresholds). To include a summary description of the change control process, participants including their roles and responsibilities, and documentation.	9.0
Draft Agreement change requests, proposed for approval will be referenced, and attached as an appendix to the PMP.	Appendix A

DISTRIBUTION

	MSIN
U. S. Department of Energy, Richland Operations Office (40)	
E. B. Dagan	A5-15
R. F. Guercia	H0-12
J. P. Hanson	K8-58
R. G. McLeod	H0-12
G. H. Sanders	A5-15
T. A. Shrader	H0-12
K. R. Westover	A5-16
R. A. Wible	K8-50
DOE Reading Room	H2-53
U.S. Department of Energy, Office of River Protection	
J. J. Royack	H6-60
A. B. Sidpara	H6-60
Pacific Northwest National Laboratory	
Hanford Technical Library	P8-55
Fluor Hanford	
W. S. Ayers	T3-28
L. T. Blackford	T4-05
L. Bounini	G1-32
J. B. Buckley	T3-04
P. J. Crane	T4-04
E. M. Greager	G1-29
R. H. Gurske	H8-73
B. K. Hampton	R3-56
D. F. Iwatate	A1-14
V. L. Magnus	G1-32
L. B. McDaniel	R3-11
K. M. McDonald	H8-44
D. L. McKenney	G1-32
T. L. Moore	G1-32
K. M. Quigley	K8-44
W. W. Rutherford	G1-23
M. S. Strickland	B3-70
T. L. Walton	K9-46
L. F. Willis	H6-30
Lockheed Martin Services, Inc.	
Central Files	B1-07
DPC	H6-08