START

0023602

169

Department of Energy
Richland Operations Office
P.O. Box 550
Richland, Washington 99352

MAR 01 1988

Incoming: 9206442

Mr. Roger F. Stanley
Hanford Project Manager
Washington Department of Ecology
Mail Stop PV-11
Olympia, Washington 98504-8711

Dear Mr. Stanley:

RCRA GROUNDWATER MONITORING

The attached material is provided as requested by Ms. Julie Atwood and Mr. Mark Fuchs, of your staff, through Ms. Pam Mitchell of Pacific Northwest Laboratory (PNL). Attachment 1 contains the sampling and analysis procedures used by PNL for Resource Conservation and Recovery Act (RCRA) groundwater monitoring. Pacific Northwest Laboratory is in the process of compiling those procedures into a single document. Attachment 2 contains the specific sampling and analysis plans for 1988 at the 183-H Solar Evaporation Basins and the 300 Area Process Trenches. Attachment 3 lists the analytical methods used for all constituents (by reference). Attachment 4 is a list of additional constituents recently added to Table 2 of Attachment 3.

The revised due date for the Final Characterization Report for the 183-H Solar Evaporation Basins is June 30, 1988.

Also attached are copies of the last two Groundwater Monitoring Quarterly Reports Ms. Atwood requested of Ms. Pam Peacock of Westinghouse Hanford Company. In addition, it has been requested that Ms. Atwood's name be added to the distribution of future groundwater monitoring quarterly reports.

Sincerely,

R. D. Izatt, Director
Waste Management Division
U.S. Department of Energy
Richland Operations Office

R. E. Lerch, Manager
Defense Waste Management Division
Westinghouse Hanford Company

OCT 1992
RECEIVED
EDMC

Attachments

cc: J. Atwood, Ecology
A. W. Kellogg, AMO (w/o attachments)
R. E. Lerch, WHC
P. J. Mitchell, PNL

BEST AVAILABLE COPY

9312701951

5.0 GROUND-WATER SAMPLING

Introduction

Test wells are sampled to determine the impact of Hanford's liquid radioactive waste disposal on the regional ground-water quality. Wells are sampled at frequencies which depend upon their location within the ground-flow network and the concentrations of radioactivity and chemical ions in the samples taken from them. Test well samples are obtained by bailing directly from the well casing or from piezometer tubes within the well casing. Air pressure is used to lift the water samples out of a piezometer tube, or a submersible pump is used in the well to bring water to the surface.

Equipment

The following equipment may be needed in collecting ground-water samples:

- rubber gauntlet gloves
- sample bottles
- bucket
- temperature probe
- pH and conductivity meters
- well location maps and road guides
- RWP clothing
- radiation detection instruments
- electric air compressor
- truck-mounted, gasoline-powered electric generator
- pencils, masking tape
- trip sheet
- sample labels

In addition to the equipment listed above, several types of equipment may be necessary in the collection of ground-water samples depending on the type of sample.

Bailer Samples

The following equipment may be needed in collecting a bailer sample from a test well:

- cable guide tool
- spare bailer
- truck-mounted electric winch

Equipment (cont'd.)

Organics Samples

The following equipment may be needed in collecting an organics sample from a test well:

- E-tape
- ice chest and ice
- amber glass sample bottles with teflon-lined caps
- truck-mounted organics sampling pump
- assorted tools
- sealable plastic bags

General Preparation

Load the truck with the necessary supplies in a secure and safe manner. Test all equipment prior to leaving on the trip.

Position the truck near the well for convenience and safe operation of sampling equipment.

9 3 1 2 7 5 0 1 9 5 3

5.1 SUBMERSIBLE PUMP SAMPLES

Introduction

Most test wells are sampled using the dedicated submersible pumps which are installed in a majority of the wells. This is the preferred sampling method because it eliminates the possibility of cross-contamination between wells.

Submersible Pump Sampling Procedure

Be sure the power switch to the 230-volt outlets is turned off.

Make sure the hose bibb is open. Never operate the pump with the outlet valve closed! Air pushed ahead of the water rising in the pipe column must have room to escape or serious damage will occur.

Plug the power cord into one of the 230-volt outlets on the generator and into outlet at the well head.

Start the electric generator.

Turn power switch on to begin pumping process. Be sure not to handle energized power cords. If the pump does not work properly - indicated by lack of air flow out the discharge hose or the generator "lugging" down - immediately turn the switch off. After waiting a few seconds while turn the switch on and off several times rapidly, finally pausing in the "ON" position to determine if the pump has started to function properly.

Repeat this procedure several times. If the sample pump still doesn't work, it needs repaired. If the breakers or fuses on the generator go off, an electrical short in the system is indicated and repair is needed.

Begin timing after the water begins to flow from the outlet. The wells must be pumped for at least 10 minutes. (If a well "pumps dry," see "Special Procedures.")

Collect sample.

Obtain sample temperature on four spaced intervals of pumping time with temperature probe.

Obtain pH and conductivity measurements.

Turn power switch off and then turn off generator. Unplug power cord.

Cap the sample bottle tightly, fill out the sample label with the time and date, and affix to bottle.

Submersible Pump Sampling Procedure (cont'd.)

Survey the sample bottle with a GM instrument. If the count is >200 c/m, record on trip sheet, RWP requirements apply and notify EM supervisor.

Place the sample in a secure location during transportation.

Deliver sample to appropriate laboratory for analysis and obtain signature on trip sheet of person receiving the sample.

Special Procedures

If the well pumps dry while waiting for a sample, it does not generally mean that no water is present. Some wells pump down after a period of time. However, a sample can still be obtained by following these steps:

- Turn off the pump when the well pumps dry.
- Wait for the well to recharge. This should be about 15 minutes, but may take as long as 30 minutes.
- Turn the pump back on. A sample can be taken immediately, as this is water from the aquifer and not from borehole storage.

9 3 1 2 7 3 0 1 9 3 5

5.2 BAILER SAMPLES

Introduction

Some test wells do not produce enough water to sample by pumping, or they may contain too much sand for a pump to handle without failing. These wells are sampled using a bailer.

Bailer Sampling Procedure

Place a sample bottle in the bailer and lock it in place with the weight retainer on the neck of the bottle.

Disengage the winch clutch and lower the bailer into the water.

Engage the winch clutch when bailer strikes the water surface.

Allow about 30 seconds for sample bottle to fill.

Turn on the electric winch and raise the sample to the surface, adjusting the speed of winch spool as the bailer is pulled up. Remove the sample from the bailer.

Obtain sample temperature with temperature probe and record on trip sheet.

Obtain sample pH with pH meter and record on trip sheet.

Obtain sample conductivity with conductivity meter and record on trip sheet.

Cap the sample bottle tightly, fill out the sample label with the time and date, and affix to bottle.

Survey the sample bottle with a GM instrument. If the count is >200 c/m, record on trip sheet, RWP requirements apply and notify EM supervisor.

Place the sample in a secure location during transportation.

Deliver sample to appropriate laboratory for analysis and obtain signature on trip sheet of person receiving the sample.

5.3 PIEZOMETER (AIR LIFT) SAMPLES

Introduction

Some piezometer tubes are sampled by the air lift method, in which the sample water is pushed up and out of the well by compressed air. A 1/2-in. diameter PVC tube is installed in these wells for this purpose.

Piezometer Sampling (Air Lift) Procedure

Connect the compressor hose to piezometer tube.

Check the gauge on the compressed air tank. It should read in the operating range prior to the start of air lift. Open the regulator valve to pressurize the hose and continue with the compressor running until water is forced out of the outlet on the side of the piezometer adapter head.

Follow pumping time indicated in the trip schedule; however, field conditions may cause some variations in the pumping time.

Rinse bucket twice before filling. Fill sample bottle from bucket.

Turn power switch off and then turn off compressor. Unplug power cord.

Obtain sample temperature with temperature probe and record on trip sheet.

Obtain pH with pH meter and record on trip sheet.

Obtain conductivity with conductivity meter and record on trip sheet.

Cap the sample bottle tightly, fill out the sample label with the time and date, and affix to bottle.

Survey the sample bottle with a GM instrument. If the count is >200 c/m, record on trip sheet, RWP requirements apply and notify EM supervisor.

Place the sample in a secure location during transportation.

Deliver sample to appropriate laboratory for analysis and obtain signature on trip sheet of person receiving the sample.

9 3 1 2 7 6 0 1 9 5 7

5.4 PIEZOMETER (BAILING) SAMPLES

Introduction

A few piezometer tubes are sampled by the bailing method. These are piezometers which do not produce enough water to sample by air lift. The bailer used consists of a flexible rubber tube, 1-in. ID and approximately 1-1/2 to 3 ft long. On one end, a brass plug is inserted and wired in place.

Piezometer Sampling (Bailing) Procedure

Bail the piezometer tube in the same manner as the well casings are bailed, pouring the sample collected into a sampling bottle until the required amount of sample is obtained.

Obtain sample temperature with temperature probe and record on trip sheet.

Obtain pH with pH meter and record on trip sheet.

Obtain conductivity with conductivity meter and record on trip sheet.

Cap the sample bottle with a GM instrument. If the count is >200 c/m, record on trip sheet, RWP requirements apply and notify EM supervisor.

Place the sample in a secure location during transportation.

Deliver sample to appropriate laboratory for analysis and obtain signature on trip sheet of person receiving the sample.

9 3 1 2 7 3 0 1 9 5 8

5.5 ORGANICS SAMPLES

Introduction

Test wells are sampled to determine the extent and impact of Hanford's hazardous waste disposal on the regional ground-water quality. Some wells are sampled quarterly in compliance with RCRA regulations, while others may be sampled less frequently as part of a general surveillance effort. These samples are obtained with special sampling equipment designed to reduce alteration of the samples before analysis.

Sampling Precautions

Do not smoke, eat, or handle any objects not necessary for sampling while performing sampling procedures. Do not sample downwind of any potential volatile organics sources such as car exhausts, open fuel tanks, etc. These could result in contaminating the sample. Note any potential sources in the area on the trip sheet if they are unavoidable. Avoid handling the teflon liner. If handling is necessary use specially prepared and protected forceps or tweezers. Do not use any liner which falls out of the cap and onto the ground.

Organics Sampling Procedure

Take water level measurement with electrical tape. CAUTION: Be sure the power switch to the 230-volt outlets is turned off!

Check to see that the hose bibb is open. Never operate the pump with the outlet valve closed! Air pushed ahead of the water rising in the pipe column must have room to escape or serious damage will occur.

Plug the power cord into one of the 230-volt outlets on the generator and into outlet at the well head.

Start the electric generator.

Turn power switch on to begin pumping process. Be sure not to handle energized power cords. If the pump does not work properly, indicated by lack of air flow out the discharge hose or by the generator "lugging" down, immediately turn the switch off. After waiting a few seconds turn the switch on and off several times rapidly, finally pausing in the ON position to determine if the pump has started to function properly.

Repeat this procedure several times. If the sample pump still doesn't work, it needs to be repaired. If the breakers or fuses on the generator go off, an electrical short in the system is indicated and repair is needed.

Note "Special Procedures," if a well "pumps dry."

9 3 1 2 7 6 0 1 9 5 9

Organics Sampling Procedure (cont'd.)

After the water begins to flow from the outlet, the well must be pumped until three to five bore-volumes have been removed, or approximately 30 minutes.

Attach the air supply line that is attached to the filter at the rear of the organics pump console to the air compressor.

To lower the special organics pump into the well, release the slide bolt lock located on the reel drive.

Lower the pump until it is just above the dedicated submersible pump, using the handbrake to control speed and stop the reel.

Re-engage the reel lock to hold the pump at the desired depth.

Turn on the air compressor.

Adjust the pumping rate to the recommended level of 30 gph by using the regulator that is installed on the instrument panel. Slowly increase the regulator pressure until the pump starts cycling. Allow a few minutes for the water discharge tube to fill and the flow meter to begin operating.

After water flows from the outlet tube, let the pump run for at least 5 minutes.

Slow the discharge to the slowest rate obtainable.

Unscrew the cap being careful not to touch the lip of the bottles or insides of the teflon liner. Also avoid touching the mouth of the discharge tap, and avoid splashing or agitating the water while the bottle is being filled.

Rinse the sample container two to three volumes with well water.

Fill the sample bottle slowly to prevent entrapment of any air bubbles. The bottle should be filled completely such that a meniscus forms.

Place the cap on immediately, turn the bottle upside down, tap it a few times and note whether there are any bubbles in the sample. If a bubble exists, discard the sample and repeat sampling including the triple rinse. If a bubble is found on the second attempt do not repeat the procedure again but note the bubble's existence on the sample label and also notify the laboratory when it is delivered.

Turn off air compressor.

9 3 1 2 7 5 0 1 9 5 0

Organics Sampling Procedure (cont'd.)

Turn power switch off and then turn off generator. Unplug power cord. .

Fill out the sample label with the time and date, and affix to bottle.

Survey the sample bottle with a GM Instrument. If the count is >200 c/m, record on trip sheet, RWP requirements apply and notify EM supervisor.

Place the sample in a sealable plastic bag and then in a dark refrigerated container during transportation.

Record on trip sheet the location, EMA number, date and time of sample collection.

Deliver sample to appropriate laboratory for analysis as soon as possible and obtain signature on trip sheet of person receiving the sample. If it can not be delivered to the lab the same day, store the sample in a refrigerator which maintains a constant temperature of 4°C.

9 3 1 2 7 3 0 1 9 5 1

13.0 HAZARDOUS MATERIALS SAMPLING

Introduction

Environmental monitoring for a wide variety of hazardous chemicals has recently been implemented at the Hanford Site. Samples to be analyzed for these materials must, in many cases, receive special treatment. Accordingly, new procedures that are specifically designed to preserve the integrity of these samples have been developed.

The procedures to be used during collection and transportation of the samples are contained in this section. All aspects of sampling, including pump operation, borehole purging, and field measurements (water level, pH, specific conductivity, and temperature) are described. The chain-of-custody procedures used to track and protect the samples are also included.

9312750196 52

13.1 WATER-LEVEL MEASUREMENT PROCEDURE

Introduction

Water-level measurements are taken each time a well is sampled, before it is purged. These measurements are taken as depth-to-water from the top of the well casing. They must be subtracted from the surveyed elevation of the casing given in Hanford Wells to obtain the elevation of the water table. The water-table elevations obtained for all wells in the sampling network during a particular sampling episode can be used to produce a contour map showing the ground-water surface at the time that the measurements were made. These contour maps can be used to help characterize the ground-water flow system and to ensure that the sampling network is adequate.

Graduated steel measuring tapes are more accurate than electrical tapes and so should be used for official measurements. However, an electrical tape can be used to determine the approximate depth to water.

Equipment

The following equipment will be needed:

- steel measuring tape with attached weight
- blue carpenter's chalk
- a copy of Hanford Wells (PNL-5397)
- electrical tape
- engineer's measuring tape
- field record forms.

Graduated Steel Tape Method

Chalk the 1-ft section of steel tape below the zero reading point.

Find the elevation of the measuring point and the estimated water level in Hanford Wells, or use an electric tape to find the approximate depth to water.

Lower the steel tape from the well's measuring point (marked with paint on the top of the casing) to the estimated water level. Note the amount of tape that is in the well by reading the tape at the measuring point. This value is referred to as the "hold point."

Remove the steel tape and check the wetted portion below the zero reading point.

NOTE: If the chalked portion is not wet, repeat the procedure, but allow more of the tape to go down the well (i.e., use a greater hold point).

Add the unwetted length of the chalked portion of the tapé to the hold point value to obtain the depth-to-water measurement.

9 3 1 2 7 5 0 1 9 6 3

13.2 HAZARDOUS MATERIALS SAMPLE COLLECTION PROCEDURES

Introduction

These procedures are intended for use in collecting ground-water samples that will be analyzed for hazardous chemicals.

Equipment

The following equipment may be needed in the field during sampling:

- truck-mounted air compressor and generator
- bladder-pump controller box
- bladder-pump hoses (set of 2)
- extra discharge line for bladder pump
- extra discharge line for submersible pump
- Teflon bailer
- pH and conductivity meter
- digital thermometer
- steel measuring tape
- blue chalk
- electrical tape
- engineer's measuring tape
- a copy of Hanford Wells (PNL-5397)
- stopwatch or watch with second hand
- bucket or jug (for measuring flow rate)
- distilled water
- ziplock bags
- ice chests with ice
- plastic gloves
- aprons
- towels
- indelible marker
- extra sample labels
- sample seals
- a copy of all relevant procedures
- sample containers with caps and liners (including extras)
- field record forms
- chain-of-custody forms
- sample-analysis request forms.

Sampling Precautions

Do not smoke, eat, or handle any objects not necessary for sampling while performing sampling procedures.

Do not sample downwind of any potential sources of volatile organics such as car exhausts or open fuel tanks. These could contaminate the sample. If any such sources are unavoidable, make a note of them on the field record forms.

Leave caps on the sample containers until just before filling.

Avoid handling the Teflon bottle cap liners. Do not use any liner that falls out of the cap and onto the ground.

9 3 1 2 7 5 0 1 9 6 4

Table 13.1. Calculated Pumping Times

Well Number	Calculated Time (min)
(199) H3-1	24
H4-3	5*
H4-4	4*
H4-5	8*
H4-6	5*
(399) 1-1	30
1-2	42
1-3	25
1-4	34
1-5	4*
1-6	6*
1-7	17
1-8	29
2-1	32
3-7	60
3-10	18
4-1	35
4-7	35
8-2	33
(699) S30-E15A	9*
S19-E13	12*

* All wells will be pumped a minimum of 15 minutes, even if the calculated time is less.

NOTE: These pumping times are based on voiding three bore-volumes of water from the well at a pumping rate of 10 gpm. To calculate an adjusted pumping time based on a field measurement of flow rate:

1. Divide the size of the container (in gal) by the number of seconds it took to fill. Multiply by 60 to get the new pumping rate (per minute).

2. Multiply the calculated time given in Table 13.1 by 10 and then divide by the new pumping rate to get the new pumping time.

9312730196 5

To reduce the water-flow rate during sample collection, turn the throttle control on the left side of the control panel in the counterclockwise direction. To increase the flow rate, turn the throttle control clockwise.

To optimize pumping efficiency for a specific well depth, refer to the pump manufacturer's operating instructions.

Sample Collection Using Teflon Bailer

Unclasp the metal bailer from the winch line and replace it with the Teflon bailer.

Disengage the winch clutch and slowly lower the bailer into the water.

Engage the winch clutch when the bailer strikes the water surface.

Allow about 30 seconds for the sample tube to fill.

Turn on the electric winch and slowly raise the Teflon bailer to the surface.

Lower and rinse the bailer twice before collecting a sample.

Unscrew the cap of the sample container, being careful not to touch the lip of the bottle or the inside of the Teflon liner. Avoid touching the mouth of the Teflon bailer.

Unclasp the Teflon bailer.

Pour the water from the bailer into the sample container slowly to prevent trapping any air bubbles. Avoid splashing or agitating the water while the sample container is being filled.

General Sample Collection Procedure

Unscrew the cap from the sample container, being careful not to touch the lip of the bottle or the inside of the Teflon liner. Also avoid touching the mouth of the discharge line.

Fill the sample bottle slowly by placing the outlet tube against the inner side of the sample bottle to prevent trapping any air bubbles. Avoid splashing or agitating the water while the bottle is being filled.

NOTE: For those bottles requiring no headspace, the bottle should be filled completely so that a meniscus forms. Cap the bottle immediately, turn it upside down, tap it a few times and check for air bubbles in the sample. If a bubble exists, discard the sample and repeat the sampling procedures until an

9 3 1 2 7 6 0 1 9 6 6

13.3 CHAIN-OF-CUSTODY PROCEDURES

Introduction

To ensure the integrity of the samples from the time of collection through data reporting, the history of the custody of each sample will be documented according to these procedures. A sample is considered to be under a person's custody if it is in any of the following states: 1) in his physical possession; 2) in his view after he has taken possession; 3) secured by him so that no one can tamper with the sample; or 4) secured by him in an area which is restricted to authorized personnel. Anyone having custody of samples must comply with the procedures described below.

Delivery Procedures

Sample Labels

Fill out and affix gummed paper labels to the sample containers prior to or at the time of sample collection. The label to be used is shown in Exhibit 13.1. The well number noted on the label identifies the well location where the sample was collected.

Sample Seals

Attach gummed paper seals to the samples immediately upon sample collection, before the samples leave your custody. Attach the seal in such a way that the sample cannot be opened without breaking the seal.

Field Record Form

Record (in black ink) all pertinent information about each sample collected on a field record form and insert into a logbook. It will be a bound book with consecutively numbered pages. An example field record form is shown in Exhibit 13.2.

Chain-of-Custody Form

A chain-of-custody form will accompany all samples from the time they are collected until they are disposed of after analysis and reporting. A single form will be used for as many samples as possible. The form to be used is shown in Exhibit 13.3. Each person who handles the sample and signs the form will return a copy of the form to the company contact whose name appears on the top line.

Sample-Analysis Request Form

UST requires that a sample-analysis request form accompany all samples delivered to the lab. The form to be used is shown in Exhibit 13.4. The field portion of the form will be completed by the sample collector; the laboratory portion will be completed by laboratory personnel.

9312720195 7

Battelle
Pacific Northwest Laboratories

FIELD RECORD

Well Number _____ Date _____

Pumping Time: Precalculated _____
New _____

Submersible (Time On) _____
Bladder (Time On) _____

CALCULATIONS

SAMPLES COLLECTED

SAMPLE NO.	VOLUME	PUMP	COLLECTOR

FIELD MEASUREMENTS

WATER LEVEL

Held			
Wet			
(E - tape = _____) Level below T.C.			

Time							
pH							
Temp							
Cond							

FIELD OBSERVATIONS _____

Data Recorded By _____ Data Checked By _____

Chain-Of-Custody Form No. _____ Laboratory Record Book No. _____
Page No. _____

BC 1500-113 (5-86)

Exhibit 13.2. Field Record Form

9 3 1 2 7 6 0 1 9 6 8

SAMPLE ANALYSIS REQUEST

Pacific Northwest Laboratory
P O Box 999
Richland WA 99352

United States Testing Company, Inc.
2800 George Washington Way
Richland WA 99352

Collector _____ Received by _____

Date /Time Sampled _____ Title _____

Company Contact _____ Date _____ Time _____

CHAIN OF CUSTODY NO. _____

SAMPLE ID _____

UST SAMPLE ID _____

COMMENTS

	CODE	CONSTITUENT	1	2	3	4	5	6	7	8	9	10	11	12	13
1	725	ICP METALS 6010													
2	726	ICP METALS 6010 ENHANCED													
3	A20	ARSENIC													
4	A21	MERCURY													
5	A22	SELENIUM													
6	A23	THALLIUM													
7	A24	THIOUREA 8330													
8	727	METHOD 8330 ENHANCED													
9	A31	LEAD BY GFAA													
10	739	PCB													
11	728	PESTICIDES 8080													
12	729	PESTICIDES 8080 ENHANCED													
13	730	VOA METHOD 8240													
14	731	VOA METHOD 8240 ENHANCED													
15	732	A/B/N 8270													
16	733	A/B/N 8270 ENHANCED													
17	734	PESTICIDES METHOD 8140													
18	C68	TOX													
19	C69	TOC													
20	C70	CYANIDE													
21	735	NITRATE, SULPHATE,.... (IC)													
22	C77	PERCHLORATE													
23	C78	SULFIDE													
24	C80	AMMONIUM ION													
25	C81	ETHYLENE GLYCOL													
26	109	COLIFORM BACTERIA													
27	181	RADIUM													
28	112	ALPHA													
29	111	BETA													
30	C86	DIOXIN													
31	C87	CITRUS RED #2													
32	191	CONDUCTIVITY													
33	199	pH													
34	736	DIRECT AQUEOUS INJECTION													
35	738	HERBICIDE 2,4-D, 2,4,5-TP SILVEX													
36	737	HERBICIDE 8150 ENHANCED													

DR2:[7,9]66

9312760019969

EXHIBIT 13.4. Sample-Analysis Request Form

UST-RD SAMPLE LOG-IN FORM

DATE:

TIME:

COOLER ID :
CLIENT SAMPLE ID:
UST-RD ID :
NUMBER OF BOTTLES IN COOLER :
IS CHAIN OF CUSTODY FORM PRESENT? :
CHAIN OF CUSTODY NUMBER :
IS SAMPLE ANALYSIS REQUEST FORM PRESENT? :

* IS THE CUSTODY SEAL ON THE COOLER INTACT? :

* ARE THE CUSTODY SEALS ON THE BOTTLES INTACT? :

* DO THE SAMPLE LABELS AGREE WITH THE CHAIN OF CUSTODY SHEET? :

* DO THE SAMPLE LABELS AGREE WITH THE SAMPLE ANALYSIS REQUEST SHEET? :

---

* IF ANSWER IS 'NO', PLEASE EXPLAIN BELOW IN DETAIL.

SAMPLES LOGGED IN BY: _____

REVIEWED BY SAMPLE CUSTODIAN: _____
Govind Rao

Exhibit 13.5. Sample Log-In Form

9 3 1 2 7 6 0 1 9 7 0

13.4 TEMPERATURE MEASUREMENT PROCEDURE

Introduction

Temperature measurements are taken during and after purging of the well, just prior to sample collection. Measurements taken during purging are used to help ensure that the well bore has been sufficiently evacuated, as indicated by stabilization of the temperature. (The pH and conductivity are measured at the same time for the same reason.) The temperature is considered stable when two consecutive measurements agree within 0.2°C. The final temperature measurement is taken just prior to sampling and is recorded as an analytical value for the sample. The digital thermometers are regularly checked against a standard thermometer for accuracy.

Equipment

The following equipment will be needed:

- digital thermometer
- field record forms.

Temperature Measurement Procedure

Turn on the digital thermometer. Make sure that the switch is positioned so that the measurements will be in degrees centigrade.

Place the probe into the stream of water being discharged from the pump.

The temperature is indicated by a flashing display, which will normally fluctuate for a few seconds. Wait until fluctuation ceases (i.e., until the same temperature is indicated on three consecutive flashes), and then record the temperature on the field record form.

9 3 1 2 7 5 0 1 9 7 1

13.5 CONDUCTIVITY CALIBRATION AND MEASUREMENT PROCEDURES

Introduction

Conductivity measurements are taken during and after purging of the well, just prior to sample collection. Measurements taken during purging are used to help ensure that the well bore has been sufficiently evacuated, as indicated by stabilization of the conductivity. (The pH and temperature are measured at the same time for the same reason.) Conductivity is considered stable when two consecutive measurements agree within 10 µmhos. The final conductivity measurement is taken just prior to sampling and is recorded as an analytical value for the sample. The conductivity meter should be calibrated once a day, before it is taken to the field to begin sampling.

Equipment

The following equipment will be needed:

- conductivity meter
- distilled or deionized water
- small screwdriver
- standard solution
- field record forms.

Conductivity Calibration Procedure

Internal Standard

Empty the sample cup on the meter. Rinse it out with distilled or deionized water. Dry the cup thoroughly.

Turn the range switch to TEST.

Press the OPERATE button.

Use the small screwdriver to adjust the CALIBRATE until the meter or display reads 8.

NOTE: This is to be done as a rough calibration or battery check.

Standard Solution

Empty the sample cup. Rinse it out with distilled or deionized water.

Fill the cup with standard solution.

Turn the MODE switch to conductivity.

Turn the RANGE selector switch to the correct range for the standard solution.

Press the OPERATE button.

9 3 1 2 7 6 0 1 9 7 2

13.6 pH CALIBRATION AND MEASUREMENT PROCEDURE

Introduction

Measurements of the pH are taken during and after purging of the well, just prior to sample collection. Measurements taken during purging are used to help ensure that the well bore has been sufficiently evacuated, as indicated by stabilization of the pH. (Conductivity and temperature are measured at the same time for the same reason.) The pH is considered stable when two consecutive measurements agree within 0.2 pH units. The final pH measurement is taken just prior to sampling and is recorded as an analytical value for the sample. The pH instrument should be calibrated once a day, before it is taken to the field for sampling.

Equipment

The following equipment will be needed:

- pH meter
- distilled or deionized water
- small screwdriver
- buffer solutions
- field record forms.

pH Calibration Procedure

Wash the meter's sample cup with distilled water.

Fill the cup with 4.0 buffer solution.

Turn the MODE switch to pH.

Press the OPERATE button. Use the small screwdriver to adjust the ZERO to make the display read 4.00 pH on the upper meter scale or on the digital display.

Discard the buffer solution. Wash the cup twice with distilled or deionized water.

Fill the cup with 10.00 buffer solution.

Adjust the SLOPE to make the display read 10.00 pH.

Rinse the cup again and refill it with 4.0 pH buffer solution. Recheck the 4.0 pH value and adjust the ZERO if necessary.

Single Buffer Calibration.

After the SLOPE is calibrated the first time each day, it may be left alone for subsequent calibration. Recheck the slope as desired.

9 3 1 2 7 5 0 1 9 7 3

ATTACHMENT 1 - PART 3
(3 pages)

MODIFICATION OF WELL SAMPLING PROCEDURE INTO PNL-MA-580

Author: Don Glover

Date of Transmittal to Reviewers: December 11, 1987

Reviewers:

J. C. Evans, Task Leader Hazardous Material Monitoring	12-11-87 Date
R. Schalla, Project Manager 300 Area Ground-Water Monitoring	12-11-87 Date
G. V. Last, Project Manager 200 Area Ground-Water Monitoring	12-11-87 Date
T. L. Liikala, Project Manager 183-H Ground-Water Monitoring	12-11-87 Date
P. J. Mitchell, Program Manager Ground-Water Compliance Monitoring	12/11/87 Date
R. G. Riley, Section Manager Geochemistry Section	12-14-87 Date
D. R. Dahl, Quality Engineer Quality Assurance	12/14/87 Date
R. M. Smith, Technical Group Leader Hydrology Section	12-11-87 Date

9 3 1 2 7 6 0 1 9 7 4

PROCEDURE FOR DISPOSAL OF PURGE WATER FROM MONITORING WELLS

This procedure is intended for use in addition to existing ground-water sampling procedures in the Environmental Monitoring Procedures Manual PNL-MA-580.

Equipment Needed

- 55 gal drum liner (cut off to 24" height)
- 2 ea 50' x 3/4" garden hose
- 20 - 30 gpm sump pump
- 2 - 25' extension cords
- Standard sampling equipment
- Tank truck or storage drums

Hydrostar Pump

Place the drum liner as close to the well casing as possible. Connect the purge hose to the Hydrostar pump and place discharge end into drum liner. Connect garden hose to sump pump and extend discharge end into tank truck or storage drum. Plug the sump pump electrical cord into one of the 110-V outlets on the truck generator. Lower the sump pump into the drum liner and begin well purging. The sump pump will automatically keep the water level in the drum liner down during this procedure. When purging is completed, attach Teflon sampling hose and discharge water into drum liner. Fill sample bottles over drum liner so that any spillage will be collected in the drum liner. After sampling, there will be a small amount of water in the drum liner that the sump pump will not pick up. Transfer this residual water to a bucket and manually dump into the tank truck or storage drum. If disposing to storage drums, secure drum lid and band before moving to next well.

Submersible Pump

Connect the sampling manifold with garden hose to the submersible pump. Extend discharge end of garden hose into tank truck or storage drum. Place drum liner beneath valve on sampling manifold. Begin well purging. When purging is completed, open valve on sampling manifold and collect samples. After sampling, transfer residual water in drum liner to a bucket and manually dump into the tank truck or storage drum. If disposing to storage drums, secure drum lid and band before moving to next well.

Bladder Pump

Place drum liner next to well casing and discharge directly to drum liner while purging and sampling. Connect sump pump and garden hose and transfer to tank truck or storage drum as with the Hydrostar pump. After sampling, transfer residual water in drum liner to a bucket and manually dump into the tank truck or storage drum. If disposing to storage drums, secure drum lid and band before moving to next well.

Additional Requirements

Protective latex or surgical gloves will be worn during this procedure to eliminate the possibility of contaminating the samples. Care must be taken

9 3 1 2 7 6 0 1 9 7 5

to assure water left in hoses and sump pump is drained into drum liner for transfer to tank truck or storage drums.

After water is disposed to the tank truck or storage drums, handling, storage, and ultimate disposal will become the responsibility of WHC waste disposal personnel.

9 3 1 2 7 6 0 1 9 7 6

ATTACHMENT 1 - PART 4
(3 pages)

MODIFICATION OF BLADDER PUMP PROCEDURE INTO MA-580

Author: Don Glover/Khris B. Olsen

Date of Transmittal to Reviewers: November 10, 1987

Reviewers:

J. C. Evans, Project Manager Hazardous Material Monitoring	11/10/87 Date
R. Schalla, Project Manager 300 Area Groundwater Monitoring	11-10-87 Date
G. V. Last, Project Manager 200 Area Groundwater Monitoring	11-12-87 Date
V. L. Liikala, Project Manager 183-H Groundwater Monitoring	11-10-87 Date
P. J. Mitchell, Program Manager Sub Surface Monitoring and Compliance Analysis	11-10-87 Date
R. G. Riley, Section Manager Geochemistry Section	12-1-87 Date
D. R. Dahl, Quality Engineer Quality Assurance	11/18/87 Date
R. M. Smith, Task Group Leader Hydrology Section	11-20-87 Date

9 3 1 2 7 6 0 1 9 7 7

Sample Collection Using Bladder Pump

If the well has a dedicated bladder pump, turn on the air compressor and use the procedure described below. If the well does not have a bladder pump, use the procedures given for the Teflon bailer to collect the remaining samples.

The diagram of the original system is seen in Figure 1A. The hookup of the 3017 low submergence adapter can be seen in Figure 1B. All hose ports and connections are well marked on the device. A small vacuum pump (Gast pump) will be used for suction instead of the air compressor inlet as noted in Figure 1B.

Operate the 3111 controller in the normal manner with the 3017 low submergence adapter as shown in Figure 1B. Optimum refill cycle times will be somewhat shorter with the 3017 installed. Note that a minimum pressure of 25 psig has to be maintained through the controller in order for the 3017 to operate. During purging, the flow throttle on the 3111 controller, located in the lower left hand corner of the controller panel, should be turned all the way clockwise so that the full 100 psig available from the compressor is delivered to the pump.

Five to fifteen pumping cycles are required to purge the air from the bladder pump and tubing. Full water flow from the sample supply tube should then begin. After water flows from the outlet tube, run the bladder pump for at least five minutes before taking samples.

To reduce the water-flow rate during sample collection, turn the throttle control on the left side of the control panel in the counterclockwise direction. To increase the flow rate, turn the throttle control clockwise.

To optimize pumping efficiency for a specific well depth, refer to the pump manufacturer's operating instructions.

9 3 1 2 7 5 0 1 9 7 8

Figure 1A.

Driver/Controller Assembly with No Low Submergence Adapter

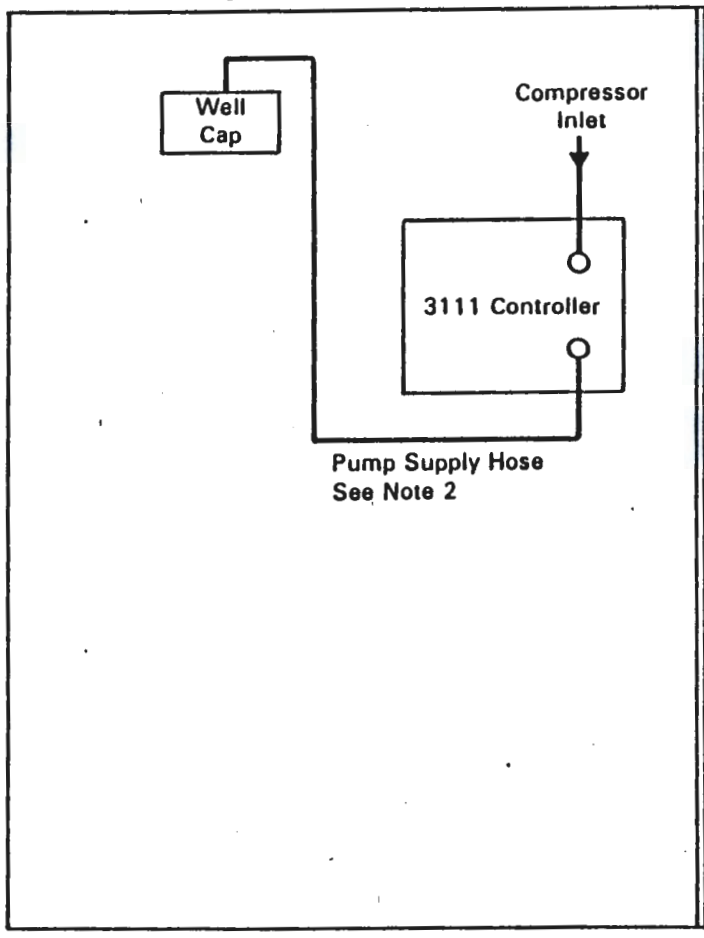

Figure 1B.

3111 Driver/Controller with 3017 Low Submergence Adapter

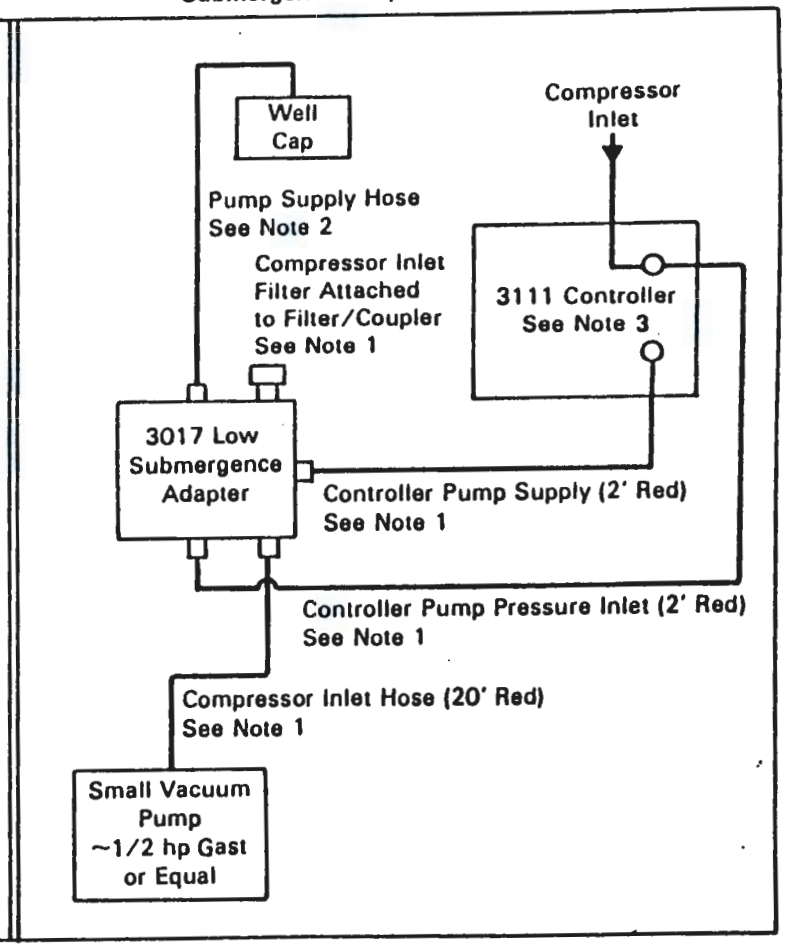

Notes:

1. Supplied with 3017 Low Submergence Adapter
2. Supplied with 3111 Compressor/Driver
3. 25 psig Minimum Required on Controller for Proper Operation

ATTACHMENT 1 - PART 5
(3 pages)

INCLUSION OF "IN-LINE FILTRATION PROCEDURE" INTO MA-580

Author: Khris B. Olsen

Date of Transmittal to Reviewers: June 19, 1987

Reviewers:

J. C. Evans, Project Manager Hazardous Material Monitoring	6/19/87 Date
R. Schalla, Project Manager 300 Area Groundwater Monitoring	6/29/87 Date
P. A. Eddie, Project Manager 100H Area Groundwater Monitoring	6/22/87 Date
G. V. Last, Project Manager 200 Area Groundwater Monitoring	7/7/87 Date
M. S. Hanson, Project Manager Surface Monitoring and Compliance Analysis	7/7/87 Date
J. S. Fruchter, Section Manger Geochemistry Section	7/7/87 Date
D. R. Dahl, Quality Engineer Quality Assurance	7/7/87 Date
P. O. Mitchell, Project Manager Radiological Groundwater Monitoring	6/23/87 Date

9 3 1 2 7 6 0 1 9 8 0

13.7 IN-LINE SAMPLE FILTRATION PROCEDURE

Introduction

For collecting a filtered water sample, a disposable filter assembly is attached to the end of the outlet tubing of a bladder pump, Hydrostar pump, or submersible pump. One filter should be sufficient to collect the required sample volume under normal conditions. If a second filter is required, repeat the filter wash procedure described below. If the filters clog too quickly, replace the standard filter (QED Model 8100) with the high capacity model (QED Model 8000) and repeat the preparation procedure.

Equipment

The following equipment will be needed:

QED "Sample Pro" Model 8100 or 8000
500-ml container
Tubing for the filter adapter

Filtration Procedure
submer
other

Follow procedure 13.2 to prepare the well for hazardous materials sampling using the bladder, Hydrostar or sible pump. Collect the filtered sample after all samples have been collected.

Bladder Pump: Set the maximum discharge pressure to 60 psi and turn off the bladder pump controller. Screw the inlet end of the filter assembly (marked inlet) into the threaded adapter, being careful not to touch filter ends to any surface. Turn on bladder pump (check maximum pressure) and filter 500 ml, as a filter wash, into the 500-ml container. Dispose of the 500 ml wash and collect the sample volume specified on the field record form. Turn off bladder pump, remove the filter, and return the filter to the laboratory for proper disposal.

Hydrostar Pump: Turn off air to the Hydrostar pump at the piston assembly. Screw the inlet end of the filter assembly (marked "inlet") into the threaded adapter at the end of the teflon tubing, being careful not to touch filter ends to any surface. Slowly turn on the air until the piston just operates smoothly. This rate should be less than 10 strokes a minute. If too much pressure is exerted across the filter the membrane will rupture, usually resulting in a popping noise. If this happens replace filter and restart the filtering procedure. Filter 500 ml, as a filter wash, into the 500-ml container. Dispose of the 500-ml wash and collect the sample volume specified on the field record form. Turn off the Hydrostar pump, remove the filter assembly, and return the filter assembly to the laboratory for proper disposal.

Submersible Pump: This pump should be used to collect a filtered sample only if a by-pass assembly is used to

9 3 1 2 7 6 0 1 9 8 1

regulate the water pressure going to the filter apparatus. The by-pass must also be capable of maintaining a sufficient water flow to prevent damage to the submersible pump. Mount by-pass assembly to the well head and teflon sampling hose to by-pass assembly before turning on submersible pump. Purge well with by-pass valve completely open. To collect unfiltered samples slowly close by-pass valve until a steady flow is observed through teflon sampling hose. To collect filtered samples open by-pass valve completely. Screw the inlet end of filter assembly (marked "inlet") into the threaded adapter at the end of the teflon tubing, being careful not to touch filter ends to any surface. Slowly, close the by-pass valve until a steady flow of water is observed through filter. When a steady flow is achieved, filter 500 ml, as a filter wash, into the 500-ml container. Dispose of the 500-ml wash and collect the sample volume specified on the field record form. Turn off the submersible pump, remove the filter assembly and return the filter assembly to the laboratory for proper disposal. Disconnect the by-pass apparatus from the well head.

9 3 1 2 7 5 0 1 9 8 2

ATTACHMENT 1 - PART 6
(7 pages)

INCLUSION OF HYDROSTAR PUMP WELL SAMPLING PROCEDURE INTO MA-580

Author: Khris B. Olsen

Date of Transmittal to Reviewers: June 19, 1987

Reviewers:

J. C. Evans, Project Manager Hazardous Material Monitoring	6/19/87 Date
R. Schalla, Project Manager 300 ~~100H~~ Area Groundwater Monitoring	6/30/87 Date
P. A. Eddy, Project Manager 100H ~~200~~ Area Groundwater Monitoring	6/22/87 Date
G. V. Last, Project Manager ~~Surface Monitoring and Compliance Analysis~~ 200 Area Ground-Water Monitoring	7/7/87 Date
M. S. Hanson, Program Manager Surface Monitoring and Compliance Analysis	7/7/87 Date
J. S. Fruchter, Section Manager Geochemistry Section	7/7/87 Date
D. R. Dahl, Quality Engineer Quality Assurance	7/7/87 Date
P. J. Mitchell, Project Manager Radiological Groundwater Monitoring	6/23/87 Date

9 3 1 2 7 5 0 1 9 8 3

Sample Collection Using the Hydrostar Pump

Upon arrival at the well head, immediately determine depth-to-water using the appropriate tapes, and record the determined values on the field record form.

- Wear gloves when taking samples and when handling containers, especially those with added preservative.

Attaching the Pneumatic Cylinder Assembly

1. Insert the support for the pneumatic cylinder into the column support on the well head assembly* (Figure 1).
2. Pull the cylinder rod down until it is fully extended and has stopped.
3. Align the eyelet on the top portion of the turnbolt with the clevis pin hole on the lower portion of the cylinder rod.
4. Align the hole on the cylinder support with the column support on the well head so that the turnbolt eyelet and clevis pin hole on the cylinder rod are aligned when the piston is fully extended.
5. Insert the clevis pin through one of the intersecting pairs of holes on the column support and clip a hitch pin into the holes in the small end of the clevis pin.
6. Check the alignment on the turnbolt eyelet with the hole on the cylinder rod. The alignment must be nearly perfect, neither too high nor too low.
7. Adjust by rotating the turnbolt clockwise or counterclockwise.

* When inserting the cylinder support into the column support on the pump assembly, at least two holes on the cylinder support must overlap with two holes on the column support. If less than two holes overlap use the extension supplied with the Hydrostar pneumatic cylinder. Align the pumping system in the same manner as described above.

Operating the Pneumatic Cylinder

1. Attach either the purging hose (large diameter) or the teflon sampling hose to the outlet on the discharge tee of the sampling pump.

9 3 1 2 7 5 0 1 9 8 4

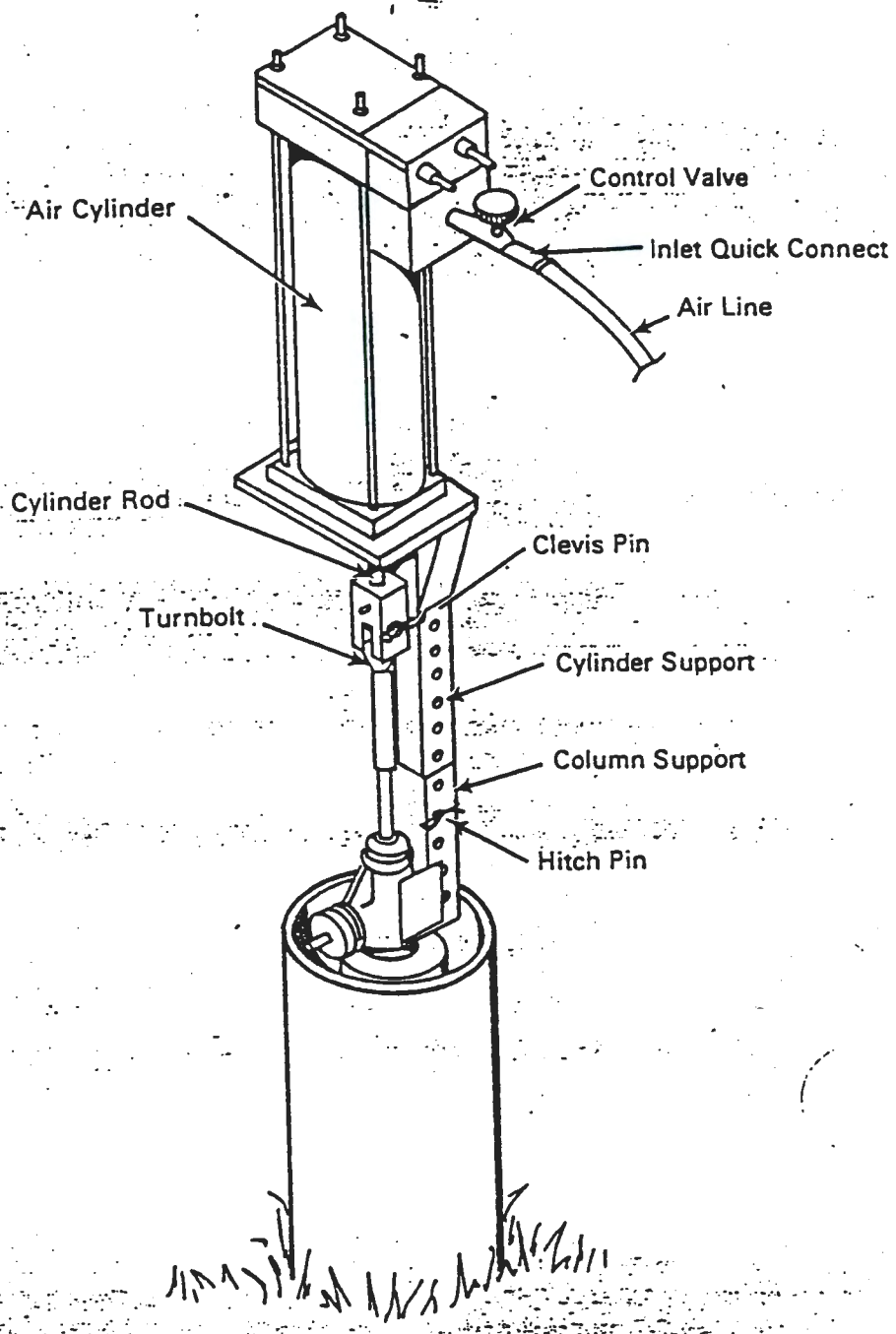

FIGURE 1.

9 3 1 2 7 6 0 1 9 8 5

2. Attach the quick-connect on the supply hose to the unattached end of the control valve on the pneumatic cylinder. The input air pressure should not exceed 120 psi.

3. Turn air supply on to the control valve.

4. Turn on the control valve on the pneumatic cylinder. The piston will begin to operate.

5. Adjust stroke rate to no more than 60 per minute*. The stroke speed of the pneumatic cylinder can be adjusted with the control valve located on the top of the pneumatic cylinder. A stroke is defined as one downward and one upward extension.

* If the pneumatic cylinder assembly is not operating correctly, and the problems are not due to the well or the pump in the well, the well may be hand pumped as described in "Manual Operation."

9 3 1 2 7 6 0 1 9 8 6

Sampling With Pneumatic Piston Assembly

1. Slow down the pumping rate until the piston operates smoothly. This rate will be less than 10 strokes a minute.

2. Attach the Teflon sampling hose and purge at this rate for a minimum of two minutes.

3. Proceed with sampling all unfiltered samples according to PNL-580.

4. Attach the filter assembly and purge the filter according to directions listed in PNL-580. If too much pressure is exerted across the filter the membrane will rupture, usually resulting in a popping noise. If this happens, replace the filter and restart the filtering procedure.

5. Dismantle the pneumatic pumping assembly as described below.

Removing the Pneumatic Pumping Assembly

1. Disconnect the air supply at the pneumatic cylinder.

2. Disassemble pneumatic cylinder in reverse order of steps 1 through 7 in the section "Attaching Pneumatic Cylinder Assembly."

3. Replace well cap over top of well head.

Manual Operations

1. Insert the handle support into the column support on the pump head assembly so that at least two holes on the handle support overlap with two holes on the column support (Figure 2).

2. Slide the clevis pin through one of the intersecting pairs of holes on the column support.

3. Clip the hitch pin into the hole in the small end of the clevis pin.

4. Remove the turnbolt on the top of the rod at the well head.

5. Attach the turnbolt on the end of the wire rope attached to the handle assembly onto the threaded rod at the top of the well head.

6. Lift the handle so that the flat edge of the cam nearest the shackle is approximately parallel with the ground.

7. Pull all the slack out of the wire rope.

8. Using either an adjustable or 9/16" open end wrench, tighten both nuts on the shackle until the sheath on the wire rope is compressed. Remembering to keep all the slack out of the wire rope.

Manual Well Sampling

1. Attach either the purging hose (large diameter) or the Teflon sampling hose (small diameter) to the outlet on the discharge tee of the sampling pump.

2. Begin pumping the operating handle with smooth, even strokes. For best performance, use 20 to 45 strokes per minute for purging the well. Use less than 10 strokes per minute during sampling. When the filter assembly is attached, special attention is required to prevent rapid build up of pressure across the filter. If too much pressure is exerted across the filter the membrane will rupture, usually resulting in a popping noise. If this happens, replace the filter and begin sampling for the filtered sample according to the written procedure.

3. When sampling is completed follow the direction below to disassemble the handle assembly from the well head.

9 3 1 2 7 5 0 1 9 8 7

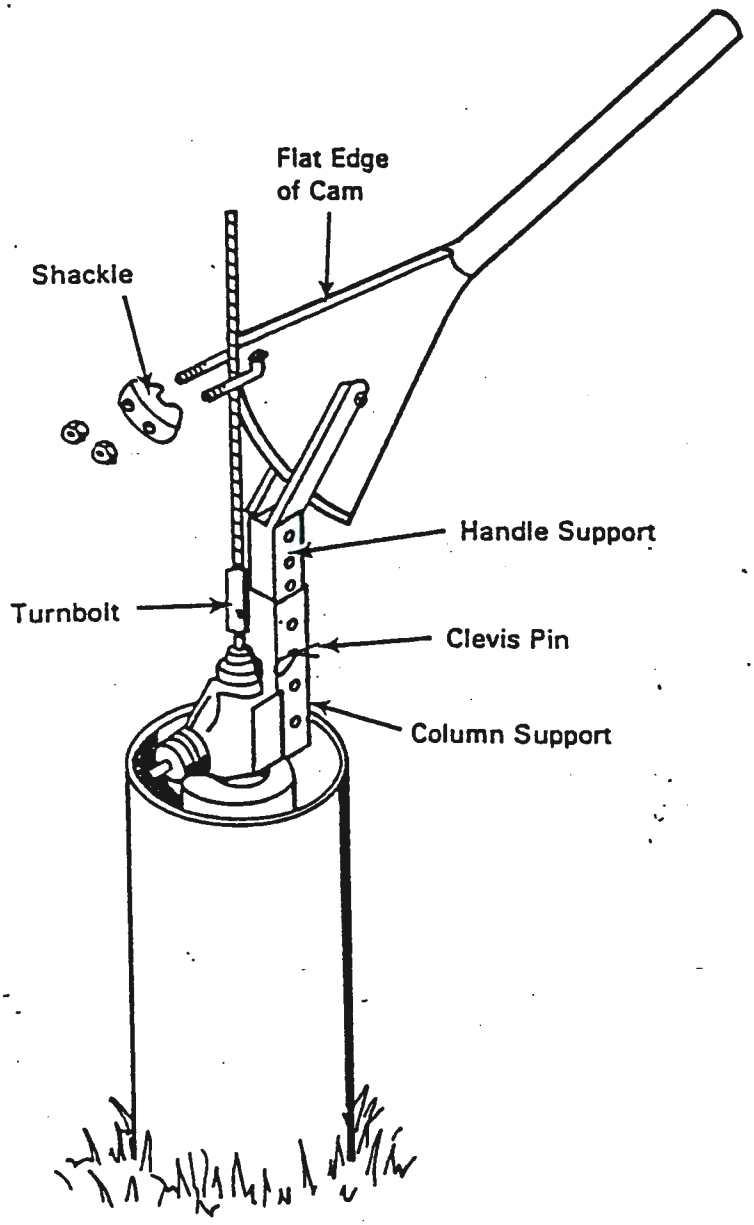
Flat Edge
of Cam
Shackle
Handle Support
Turnbolt
Clevis Pin
Column Support

Figure 2

Removing the Handle Assembly

Disassemble the handle assembly in reverse order of steps 1 through 8 in the section "Manual Operation."

9 3 1 2 7 5 0 1 9 8 9

Procedure for Disposal of Excess Ground Water Samples, P-1 for RCRA Compliance/Hazardous Materials Monitoring

1.0 OBJECTIVES

The objective of this procedure is to establish a method for disposing of ground-water samples that remain after all laboratory analyses are completed. The procedure applies to samples generated in and before FY 1986. The FY 1987 contract for sample analysis with U.S. Testing (UST), will provide for disposal by UST.

2.0 REQUIREMENTS

Adherence to the procedure for disposal of ground-water samples shall assure that disposal of these samples conforms to all Washington State regulations dealing with hazardous wastes.

3.0 COMPLIANCE WITH REGULATIONS

Criteria for unrestricted disposal of ground-water samples have been compiled and communicated to this project by PNL Laboratory Safety staff members Jeene Hobbs and Manford Leale.[a] None of the sample concentrations reviewed would be designated as regulated hazardous waste under Washington State's dangerous waste regulations in WAC 173-303.[b]

Compliance with waste regulations will be re-checked if any major changes occur in concentration levels. PNL Laboratory Safety shall be contacted to provide special disposal instruction in case the contents of any bottles exceed allowable concentrations of radionuclides or hazardous materials.

4.0 DISPOSAL OF SAMPLES

Personnel from UST will return any bottles containing remaining ground water to PNL, along with the completed chain-of-custody forms. If the entire sample is used, UST will dispose of empty sample containers, and return chain-of-custody forms to PNL.

(a) Memo from Jeene Hobbs to Jan Carlile, dated 12/09/85.
Memo from Manford Leale to Marcia Walter, dated 01/23/86.
(b) Memo from Jeene Hobbs to Marcia Walter, dated 01/31/86.

Approvals: Project Manager L. J. Prater (JVC) 11-24-86		QA Rep [illegible] 11/14/86	
Procedure No: P-1	Revision No: 0	Date Issued: 11-24-86	Page 1 of 2

9 3 1 2 7 6 0 1 9 9 0

Procedure for Disposal of Excess Ground-Water Samples, P-1

Disposal of ground-water samples will be carried out by PNL.

Ground-water samples that can be disposed into the sewer system will be disposed of in a PNL laboratory facility (drain). PNL Laboratory Safety shall be contacted to provide special disposal instruction in case the contents of any bottles exceed allowable concentrations of radionuclides or hazardous materials.

Empty bottles will be disposed in a trash container.

Completed chain-of-custody forms will be filed as project records.

9 3 1 2 7 6 0 1 9 9 1

Procedure for Data Handling and Verification, P-2
for RCRA Compliance/Hazardous Materials Monitoring

1.0 OBJECTIVE

The objective of this procedure is to establish a standardized method for the receipt, entry into the PNL data base, verification, and review of data from United States Testing (UST), the primary analytical laboratory. Data are received from UST in both magnetic media and hard copy form.

2.0 REQUIREMENTS

The incoming data from the primary laboratory shall be checked to assure their accuracy and completeness. Entry of the data into the data base will be verified against the raw data from the laboratory.

3.0 DATA HANDLING, VERIFICATION, AND REVIEW

Magnetic tapes, two types of data listings, and raw data sheets from the laboratory are delivered to PNL by UST personnel. One of the listings is a summary report, which is used for data review. The other listing is an image of the file as it appears on magnetic tape, which is used for verification of the contents of the tape.

The summary report is reviewed by the Sample Analysis Task Leader to find results which are greater than detection limits, blanks which have values above detection limits, or any suspect results. All discrepancies shall be investigated and resolutions documented.

The data file is copied from magnetic tape to the disk on the WVAX computer. A listing of this input file is compared with the listing from UST to verify the contents of the tape. (This is not a detailed comparison, but a check for the correct number of records, the proper date, etc.)

Two programs are run to check the input file and read it into the data base:

The UPDRES (update results) program is used to process the file of data into the data base. The program reads the file, checks the file for format errors, and generates a report which lists rejected data. Examples of circumstances which cause rejection of data include improper well or constituent codes, no sample date associated with the analysis value, or receipt of internal UST QC data that is not intended to be included in the PNL data base. The output from the UPDRES program is reviewed, and any unexplained rejects are investigated.

9 3 1 2 7 6 0 1 9 9 2

The ANATREND (analytical trend) program reads the file generated by UPDRES, does trend-checking, and generates a report of results that have been stored in the data base. The trend-checking program flags values that are outside 2.09 times the standard deviation of the linear regression curve for each sampling point.

The report generated by ANATREND is used to verify values recorded in the database against the raw data sheets from UST by a designee of the Sample Analysis Task Leader. This is accomplished by following methods described in American National Standard ANSI/ASQC Z1.4-1981 "Sampling Procedures and Tables for Inspection by Attributes" at an Acceptable Quality Level (AQL) of 1 %. Pertinent information from Tables I and IIA from this document are included in Attachment 1 of this procedure. The procedure to be followed in data verification by sampling inspection consists of the following steps:

1. Determine the number of records that were entered into the database from the UST data tape. This number is printed at the end of ANADAT.RPT. This is the Lot or Batch Size.

2. Determine the Sample Size from Attachment 1 for the lot or Batch Size.

3. Determine the sampling interval (SI) as the whole number portion of (Lot or Batch Size)/(Sample Size).

4. Mark every SI-th record on the ANADAT.RPT computer listing that is produced from the tape.

5. Check every record marked in step 4 against its laboratory data sheet value and initial each value checked on ANADAT.RPT.

6. Count the number of checked records that are nonconforming, that is the number that are incorrect in the database.

7. Determine the Acceptance and Rejection numbers from Attachment 1 for the Sample Size that has been used.

8. If the number of nonconformances is less than or equal to the Acceptance number sign the ANADAT.RPT listing as accepted and enter the initials of the verifier into the data base for each record from that tape.

9 3 1 2 7 5 0 1 9 9 3

If the number of errors is greater than or equal to the Rejection number, verify every number in the ANADAT.RPT listing and report the results to the Statistical and Qualitative Data Evaluation Task Leader for further action as outlined in ANSI/ASQC Z1.4-1981.

If discrepancies or errors are discovered, they shall be brought to the attention of the Sample Analysis or Data Handling Task Leader (or designee) who shall determine any corrective action. If data are changed in the data base, the new results are automatically included in subsequent ANATREND runs. The most recent value that was changed remains stored in the file in a separate location.

Field data are hand-entered by designated data handling staff. These data are verified by comparing field notes with the data listing.

Any input errors in field data shall be corrected. When field data are correctly entered, the person verifying the data shall sign and date the listing and submit it to the Data Handling Task leader. This verification listing shall be treated as a project record.

If the laboratory provides a corrected result on magnetic tape, the record will automatically be modified in the data base and included in subsequent ANATREND runs. Corrected results are marked as "modified" in the data base.

9 3 1 2 7 6 0 1 9 9 4

SAMPLING PLANS FOR NORMAL INSPECTION

LOT OR BATCH SIZE	SAMPLE SIZE	ACCEPTANCE	REJECTION
2 - 150	13	0	1
151 - 500	32	1	2
501 - 1,200	80	2	3
1,201 - 3,200	125	3	4
3,200 - 10,000	200	5	6
10,001 - 35,000	315	7	8

Extracted from ANSI/ASQC Z1.4-81, Tables I and II-A

9 3 1 2 7 6 0 1 9 9 5

PROCEDURE P-3: STATISTICAL ANALYSIS OF DATA

Hazardous Material Monitoring Project
RCRA Compliance Ground-Water Monitoring Project

1.0 OBJECTIVES

Data collected for the above projects will be routinely summarized for reporting to the sponsors and regulators, and less frequently analyzed for the assessment of the ground-water regime. Procedures for accomplishing the summaries that are routinely applied to these data will be included in this procedure as they are developed.

It is also anticipated that other statistical techniques, such as time series analysis, factor analysis, regression analysis, geostatistics, and other techniques that are appropriate to analyzing the data will be used in the assessment of the ground-water system. However, these will not be applied on a routine basis and will not appear in this procedure. Application of these non-routine procedures will, however, be expected to follow the necessary documentation requirements given in QA Plan ED-41, Section 3 - Design Control and Method Review, Addition 6 - System Maintained Software and Support Software.

At this time the routine procedures applied to the data are summaries described in "RCRA Ground-Water Monitoring Technical Enforcement Guidance Document (Draft)", 1985, Environmental Protection Agency. These summaries list and summarize the data with simple descriptive statistics calculated for different combinations of the data and plot the data for visual review. The steps needed to accomplish this are outlined below in 3.0 Generating Summaries (Simple EPA Summaries).

Other statistical procedures that are planned to be applied on a routine basis in the future are trend tests to identify statistically significant increases in contamination, quality control charts to look for off-normal levels of contamination or outliers, and hypothesis tests for statistical significance of possible contamination. Examples of these methods and others can be found in "Ground-Water Monitoring Plans and Statistical Procedures to Detect Leaking at Hazardous Waste Facilities", 1986, PNL-5754. However, all of these procedures depend on having 15 to 20 data points before they can be applied. The procedures for applying these methods will be developed as the quantity of data allows and will be included in this procedure as they become available.

9 3 1 2 7 6 0 1 9 9 6

2.0 REQUIREMENTS

The Project is required under 40 CFR 264 to determine the rate and extent of contamination and determine concentrations of hazardous waste constituents in ground-water. In fulfillment of this requirement, "RCRA Ground-Water Monitoring Technical Enforcement Guidance Document (Draft)", 1985, Environmental Protection Agency, describes certain basic summaries of the data that the regulators would like available to them when they are reviewing the status of any ground-water monitoring network. The following section defines the procedures that are used to generate these suggested summaries.

The data used as input to the programs discussed in this procedure are available in PNL's Hanford Ground-Water Database (HGWDB), and are entered into the database by procedures described in Procedure P-2, Data Handling and Verification.

All of the programs discussed in this procedure are run on PNL's WVAX, which is a VAX-11/780. The latest version of the operating system is VMS 4.4. System supported software packages used for this section are: VAX/DATATRIEVE, Version 3.4, used to extract data from the HGWDB and prepare a card image file for input to summarization programs; and Statistical Analysis System (SAS), Version 5.03, used to read in the data, organize it, summarize it, and generate tables and graphics.

The programs and data files for each separate project covered by this procedure are maintained on individual project accounts on the WVAX. Within each project account there is a file called NOTE.BOOK that contains the latest instructions for generating the tables and plot for that project.

3.0 GENERATING SUMMARIES (SIMPLE EPA SUMMARIES)

The following steps must be followed to generate the simple EPA summaries.

1. Login to a personal account on the WVAX computer and SET PROJECT to the appropriate project account (Note: you must have permission to access the project account). Review the NOTE.BOOK file in the project account to ensure that the most recent report generation instructions are being followed for that project. Each project will have the same basic programs except for header information, lists of well names, definition of site-specific constituents, and other possible minor differences.

2. Retrieve the necessary raw data from the HGWDB using the appropriate DATATRIEVE command files by entering "DTR @filename" at a VMS prompt or by submitting a batch job with a similar statement in it. As an example the following DATATRIEVE command files are used to retrieve raw data for the 183-H Solar Evaporation Basins:
   - ANA183H.DTR for chemical constituent data (ANADAT relation)
   - HYD183H.DTR for water level data (HYDDAT relation)
   - TMP183H.DTR for temperature data (TMPDAT relation)

9 3 1 2 7 5 0 1 9 9 7

3. Read the retrieved raw data into SAS and give simple listings by using the appropriate SAS command files by entering "SAS filename" at a VMS prompt or by submitting a batch job with a similar statement in it. As an example the following SAS command files are used for the 183-H Solar Evaporation Basins:

   ANA183H.SAS for the chemical constituent data
   HYD183H.SAS for the water level data
   .TMP183H.SAS for the temperature data

   Review of the output from the program for chemical constituent data is necessary as it contains information that may be needed for updating two programs referenced in the next step: LISTS.SAS and PERIODS.SAS

4. Prepare chemical constituent data for input to EPA summary programs by using the following programs. The three following SAS command files are not run themselves but are read into other SAS command files referenced below. They contain defining information that is not included in the HGWDB but is used for organizing the data. HOBOKEN.SAS is in its final form, but LISTS.SAS will have to be updated whenever a constituent subset changes, while PERIODS.SAS will have to be updated each sample period.

   HOBOKEN.SAS - Defines data analyzed by UST/Hoboken
   LISTS.SAS - Defines constituent subsets for the Short List
   PERIODS.SAS - Defines the sample periods by dates of sampling

   Once LISTS.SAS and PERIODS.SAS are appropriately updated, run the following program by entering "SAS ABOVEDL" at the VMS prompt or submitting a batch job with a similar statement in it. This program separates the data into two SAS datasets for further processing. One, called BELOWDL, is the most basic summary of the data and is used as input to TABLE60.SAS in the next section. The other dataset is called ABOVEDL. It contains all the raw data for each constituent that had at least one value reported as being above the detection limit and is used as input to all the other simple summary programs.

   ABOVEDL.SAS - Separates ANA183H into BELOWDL and ABOVEDL

5. The following programs actually produce the output that is reported to the sponsors and regulators. Each program is run by entering "SAS filename" at the VMS prompt or submitting a batch job with a similar statement in it.

   TABLE60.SAS - Summary for all constituents (total, above DL)
   TABLE61.SAS - Raw data listing per constituent > DL
   TABLE62.SAS - Simple statistical summaries by Constituent
   TABLE63.SAS - Simple statistical summaries by Constituent, Well
   TABLE64.SAS - Simple summaries by Constituent, Well, Sample Date
   TABLE65.SAS - Simple summary by ranking descriptive statistics
   PLOT183H.SAS - Does time plots of constituents

9312760199 8

Change Control Procedure, P-4 for RCRA Compliance/Hazardous Materials Monitoring

1.0 GENERAL

This procedure details the methods for initiating, processing, implementing and recording changes to the functional characteristics of approved documents affecting design, fabrication, construction, installation or testing.

All changes shall be traceable from need identification through completion of physical construction and incorporation of the changes into the permanent as-built construction drawings and specifications and into the technical and/or schedule control documentation.

2.0 REQUIREMENTS AND FORMAT

2.1 Authorized changes to the approved documents listed in Paragraph 1.0 above, shall be documented on a Design/Field Change (DFC) form (Attachment 1). The DFC form is to be used only for changes occurring during the construction phase.

3.0 PROCESSING DESIGN/FIELD CHANGES

3.1 DFCs may be originated by either the PNL Geologist or the Project Manager. All DFCs shall be typed or completed in black indelible ink (including all approval signatures).

3.2 Upon determination of the requirement for document revision, the person(s) requesting the change shall contact the Project Manager, or his designate, to explain and justify the change request. Upon concurrence of the Project Manager that a revision is required, a DFC shall be initiated. The DFC requester shall be given the responsibility of authoring the DFC.

3.3 The DFC author shall list on the form a DFC number obtained from the Project DFC Log maintained by the field record custodian. The project number and title shall be written on the form.

9 3 1 2 7 6 0 1 9 9 9

Prepared by:		Approvals: 11-24-86	
R.L. Aalseth (RSP for) 11-24-86		L.J. Prater (JMC) Project Manager	DR Dahl 11-14-86 QA Rep
Procedure No: P-4	Revision No: 1	Date Issued: 11-24-86	Page 1 of 4

3.4 The form shall contain a listing of all documents affected by implementation of the DFC, including drawings, Acceptance Test Procedures, specifications, Nonconformance Reports, and other DFCs.

3.5 The DFC author shall enter a description of the change on the form. Sufficient detail to allow implementation of the change must be contained in the description. Required sketches must be attached, with the DFC number and a place for review and approval contained in each sketch page. All pages (including attachment) shall be numbered sequentially.

3.6 The DFC author shall enter a clear and concise justification for the DFC.

3.7 The DFC author reviews the change control form for completeness, signs the DFC and enters phone number, organization, and date.

3.8 The DFC author enters under "Remarks" any data or references which, while not directly pertaining to the particular DFC, may make the DFC more clear or more easily evaluated.

3.9 The DFC author shall obtain the following signatures (as a minimum):

- Project Manager (if not originator)
- Quality Engineer
- Senior Technical Reviewer

Other organizations may need to review/approve the DFC, and it shall be the responsibility of the DFC author and/or the Project Manager to assure that other required signatures are obtained.

3.10 Approval of the Project Manager or a senior technical reviewer may be obtained by telephone/radio. In such cases, the person obtaining the approval shall document the approval on the DFC and initial and date each approval received. The DFC author shall arrange to obtain the signatures as soon as possible on the first normal day shift.

3.11 A staff member designated by the Project Manager shall maintain the DFC Log for all DFCs associated with project-directed work. This log shall record a list of DFCs sequentially numbered by Project. Numbers are assigned upon request.

9 3 1 2 7 5 0 2 0 0 0

The staff member designated to maintain the DFC Log reviews approved DFCs for completeness (returning incomplete DFCs to the Project Manager for completion of the incomplete portions); verifies the distribution shown on the DFC is complete and up to date; fills in the block with the latest approval date; and distributes the DFC, retaining the original in the appropriate Project File and logging the final approval date in the DFC Log.

3.12 DFC numbers which are assigned but not approved and issued shall be voided by Project Files upon notification from the requesting individual or the Project Manager. The DFC Log shall be updated to show the voiding of the numbers. Numbers shall not be reassigned. Voided DFCs shall be so noted in the DFC Log.

4.0 REVISIONS TO DESIGN/FIELD CHANGES

Prior to final approval of a DFC, revisions may be made through use of a single line strike out on the original (black indelible ink only). New information shall be entered, and the originator of the revision shall initial and date the change. If the change is of a technical nature, all approval signatures obtained prior to the revision must be initialed and dated by the approver(s) subsequent to the change. Changes having no impact on the technical aspects of the DFC shall be initialed and dated by the author of the change. Revisions to approved DFCs which have already been issued require initiation of a new DFC (with a new number).

9312760201

ATTACHMENT 1

DESIGN/FIELD CHANGE			DFC No.
Task No.	Project Title		Final Approval Date
Documents Affected			
Description of Change			Distribution
Justification			
Remarks			
Initiator/Author	Phone	Organization(s)	Date
Approvals			
Project Manager		QA	

9312760202

Procedure for Water-Level Measurements for the 100-H Area Water-Level Network, P-5 for RCRA Compliance/Hazardous Materials Monitoring

Introduction

Water-level measurements are taken approximately twice a month. All wells in the current network are measured on the same day. These measurements are taken as depth-to-water from the top of the well casing. They must be subtracted from the surveyed elevation of the casing to obtain the elevation of the water table. The water-table elevations obtained for all wells in the network can be used to produce a contour map showing the ground-water surface on the day that the measurements were made. These contour maps can be used to help characterize the ground-water flow system and to ensure that the sampling network is adequate.

Equipment

The following equipment will be needed:

- graduated steel measuring tape with attached weight
- blue carpenter's chalk
- 100-H Area Water-Level Network field notebook

Procedure

If the steel tape has a zero reading point, chalk the 1-ft section of tape below it. If the steel tape has no zero reading point and has divisions in hundredths of a foot all along it, then chalk several feet of the bottom portion of the tape.

Estimate the approximate depth to water by using the most recent of previous measurements.

Lower the steel tape into the well to the estimated water level. Read the value of the "hold point" from the tape while holding it even with the well's measuring point (marked with paint) on the top of the casing.

Remove the steel tape and check the wetted portion at the end of the tape.

NOTE: If the chalked portion is not wet repeat the procedure using a greater hold point. If the chalked portion is completely wet repeat the procedure using a lesser hold point.

If the tape has the 1-ft section of divisions then add the unwetted length of the chalked portion of the tape to the hold point value to obtain the depth-to-water measurement. If the

9 3 1 2 7 6 0 2 0 0 3

tape has divisions all along it's length then subtract the wetted length of the chalked portion of the tape from the hold point value to obtain the depth-to-water measurement.

Repeat the procedure until two steel tape measurements agree within at least ± 0.05 ft.

Record the date, well number, depth-to-water measurements, time of measurements, steel tape number, and the initials of the person taking the measurements in the 100-H Area Water-Level Network field notebook. If you must subtract the wetted length to obtain the depth to water measurement then record the hold point and the length of the wet portion as well as the depth-to-water measurements.

9 3 1 2 7 5 0 2 0 3 4

Procedure for Collection and Documentation of Drilling Data, P-6 for RCRA Compliance/Hazardous Materials Monitoring

1.0 OBJECTIVE

This procedure provides standardized methods for the collection and documentation of sediment samples and well construction data, for wells drilled by the cable tool method.

2.0 APPLICABILITY

This procedure applies to work performed by well site geologists during well construction.

3.0 RESPONSIBILITIES

3.1 Well Site Geologist

- Collect and document drilling data

3.2 Senior Technical Reviewer

- Review and sign/date Well Completion Report/Title III Inspection List
- Review and sign/date As-Built Diagram
- Review and sign/date Drill Logs

4.0 PROCEDURE

4.1 Collection of Sediment Samples

Sediment samples shall be collected at 5-foot intervals and changes in formation by the well site geologist. All drill cuttings to be sampled shall be collected from the driller in a 5 gallon bucket.

Two pint jars shall then be filled from the bucket. One jar shall be submitted for laboratory analysis and the other retained for archiving.

A label indicating well number, depth, date, drilling method and initials of the geologist collecting the sample shall be placed on each sample jar. Well number, depth and date shall also be written on the lid of each jar.

9 3 1 2 7 6 0 2 0 0 5

Approvals: Project Manager [signature] 3/16/87		QA Rep. [signature] 3/16/87	
Procedure No: P-6	Revision No: 0	Date Issued: 3-16-87	Page 1 of 3

If the well is being drilled with a drive barrel above the water table, a moisture sample shall also be collected from the bucket. Each moisture sample shall be sealed with white identification tape. The well number, depth, date and initials of the geologist collecting the sample shall be recorded on the identification tape with indelible ink. Each moisture sample shall then be doubly wrapped in a plastic bag, and taped shut.

The remainder of the sample in the bucket shall be used for sediment sample description.

4.2 Documentation of Sediment Samples and Well Construction Data

Sediment sample descriptions and well construction data for each well shall be recorded on a Well Completion Report/Title III Inspection List (Attachment 1), As-Built Diagram (Attachment 2) and Drill Log (Attachment 3). These data shall be recorded daily by the well site geologist. Nonapplicable items shall be designated N/A.

The Well Completion Report/Title III Inspection List provides a complete summary of well construction and completion data. Data recorded on the Well Completion Report/Title III Inspection List shall include: general project and well information, drilling method, completion data, casing data, perforations, screen, annular seal, geophysical logging, aquifer testing and other applicable items. Casing data, perforations, screen, annular seal, geophysical logging, aquifer testing and other applicable items shall be approved by the well site geologist. After completion of the well, an overall review of the Well Completion Report/Title III Inspection List shall be performed by the Senior Technical Reviewer.

The As-Built Diagram is a graphical representation of the well construction, geologic and hydrologic data. Data recorded on the As-Built Diagram shall include: well number, geologist, page number, construction data, depth in feet, geologic and hydrologic data. After completion of the well, an overall review of the As-Built Diagram shall be performed by the Senior Technical Reviewer.

The Drill Log contains detailed descriptions of the sediment samples and well construction data. Data recorded on the Drill Log shall include: geologist name, date, rig, well number, depth at start, depth at finish, computer number, project number, subcontract number, total casing, depth, drill method, wet/dry sample, lithologic description including moisture sample data, time, drilling comments and remarks. A new Drill Log shall be used each day. After completion of the day's activities, the well site geologist shall sign and date the Drill Log. After completion of the well, an overall review of the Drill Logs shall be performed by the Senior Technical Reviewer.

9 3 1 2 7 5 0 2 0 0 6

4.3 Description of Sediment Samples and Well Construction Data

Detailed descriptions of the sediment samples and well construction data shall be recorded on the Drill Log under "Lithologic Description" by the well site geologist.

Sediment sample descriptions shall include the following information as a minimum: lithologic name, texture, sorting, gross mineralogy of the framework and matrix, roundness of the framework and matrix, wet/dry color, reaction in hydrochloric acid (HCl), consolidation and changes in lithology.

Well construction data shall include the following information as applicable: drill method, drill depth, completion depth, drill rate, casing (type, size, depth and lengths), perforations (type, depth and schedule), screen (type, length, slot size and depth), annular seal (type, interval and volume), packer (type, size and depth), well development and depth to water.

4.4 Data Management

After completion of the project, the original Well Completion Report/Title III Inspection List, As-Built Diagram and Drill Logs for each well shall be retained by V. L. McGhan of the PNL Geosciences Department. A copy of each completed form shall be retained by the PNL Records Retention Center.

9 3 1 2 7 6 0 2 0 0 7

Battelle
Pacific Northwest Laboratories

Well Completion Report/Title III Inspection List

Project _____
Location _____
Driller _____
Drilling Co. _____
Geologist _____

Well Number _____
Temporary Well Number _____
Coordinates _____
Casing Elevation _____
Ground Elevation _____

DRILLING METHOD

Rotary Air _____ Mud _____
Cable Tool D _____ H _____
Drilling Fluid _____
Other _____

COMPLETION DATA

Drilled Depth _____
Completion Depth _____
Date Started _____ Completed _____
Static Water Level/Date _____

CASING DATA

Type	Size	
_____	_____	to _____
_____	_____	to _____
_____	_____	to _____

Approved By _____ Date _____

PERFORATIONS

Type _____

Depth	Schedule
_____-_____	_____
_____-_____	_____
_____-_____	_____

App. By _____ Date _____

SCREEN

Type _____
Length _____
Slot Size _____
Depths _____-_____
_____-_____

App. By _____ Date _____

ANNULAR SEAL

Type	Interval	Volume
_____	_____	_____
_____	_____	_____
_____	_____	_____
_____	_____	_____

App. By _____ Date _____

GEOPHYSICAL LOGGING

Sondes	Interval	Date
_____	_____-_____	_____
_____	_____-_____	_____
_____	_____-_____	_____
_____	_____-_____	_____
_____	_____-_____	_____
_____	_____-_____	_____
_____	_____-_____	_____

Approved By _____ Date _____

AQUIFER TESTING

Type of Test _____
Length of Test _____
Volume Pumped _____
Drawdown _____

Approved By _____ Date _____

OTHER APPLICABLE ITEMS

___ Steam Cleaning
___ Storage of Const. Material
___ Tool Lubricants
___ Concrete Pad
___ Protective Steel Posts
___ Safety Paint
___ Straightness Test
___ Well Development
___ Downhole TV Inspection
___ Well Abandonment
___ Complete As-Built Diagram, Driller's and Geologist's Logs

Approved By _____ Date _____

Reviewed By _____ Date _____

A-1800-187 (3/87)

9312760200 8

Battelle
Pacific Northwest Laboratories

AS-BUILT DIAGRAM

Well Number _____ Geologist _____ Page _____ of _____

Reviewed by _____ Date _____

Construction Data		Depth in Feet	Geologic/Hydrologic Data	
Description	Diagram		Diagram Litho.	Lithologic Description

A-1800-186 (3/87)

9 3 1 2 7 5 0 2 0 0 9

9 3 1 2 7 6 0 2 0 1 0

DRILL LOG	By	Rig	Well Number	Computer Number	Project or Work Order No.
	Date		Depth To		Subcontract No.

Total Casing	Depth	Drill Method	Wet/Dry Sample	LITHOLOGIC DESCRIPTION % Each Grain Size, Color, Roundness, Caliche, Etc.	Time	Drilling Comments

REMARKS:

D - Drive Barrel H - Hand Tool L - Large M - Medium S - Small VC - Very Coarse C - Coarse F - Fine VF - Very Fine ____ Standing Water

A 6000 021 (5 85)

Procedure No. P-6, Rev. No. 0, Attachment 3, Page 1 of

QUALITY CONTROL PROCEDURES FOR COLLECTION OF SAMPLES
P-7 for RCRA, CERCLA, SARA and other Compliance/Hazardous Materials Monitoring

1.0 OBJECTIVE

This procedure provides instruction for collecting and handling quality control samples from monitoring wells on the Hanford site. These quality control samples include transport and transfer blanks, intralaboratory and interlaboratory duplicate samples, and blind standards.

Transport and transfer blanks are used to check for contamination arising from the transportation or collection of samples for volatile organic analysis (VOA). Intralaboratory duplicate samples are used to determine sampling variability. Interlaboratory samples are used to determine laboratory variability. Blind standards are used to assess the accuracy of laboratory analysis.

2.0 APPLICABILITY

This procedure applies to blanks, splits, duplicates and blind standard samples collected for quality control purposes. These procedures shall be performed according to the schedule presented below for all PNL managed CERCLA, RCRA, SARA, and Hanford site groundwater monitoring programs.

One transfer and one transport blank shall be processed per 20 VOA samples, or one in each sampling area during each sample period which ever is greater[1]. The well selected for transfer and transport blanks shall be determined by the sample collection task leader(s). Wells designated for transfer and transport blanks shall be rotated.

Duplicate samples for U. S. Testing (UST) and interlaboratory comparison will be taken twice per quarter, or when otherwise deemed necessary by the quality control and statistical analysis task leader(s). Duplicate samples for intralaboratory and interlaboratory comparison will be taken from the same well as the transfer and transport blank and on the same schedule. The schedule shall be determined by the quality control task leader(s) or project manager.

Blind standard samples shall be prepared quarterly to monitor the performance of the analytical laboratory. The schedule shall be determined by the quality control task leader.

---

1. United States Environmental Protection Agency. November, 1986. Test Methods for Evaluating Solid Waste, Volume II.

9 3 1 2 7 6 0 2 0 1 1

3.0 RESPONSIBLE STAFF

3.1 Sample Collection Task Leader

Schedule wells to be sampled for transport and transfer blanks. Provide training to the RPTs for preparing and handling blanks duplicates and standards.

3.2 Statistical Analysis Task Leader

Provide input on the required number of duplicate and interlaboratory samples.

3.3 Quality Control Task Leader

Provide blind standard samples for analysis.
Schedule duplicate analyses.

3.2 Radiation Protection Technicians

Carry out sampling as directed by the Radiation Protection Technician Supervisor.

4.0 PROCEDURE

4.1 Transport Blank.

Transport blank will be provided for VOA samples according to a schedule set by the sample collection task leader. The blank consists of a labeled 40 ml glass vial filled in the laboratory with distilled water prepared under the sample preparation task.

Remove the appropriate VOA vial from its plastic bag. Place the vial near the well while sampling is taking place.

Place the vial into the cooler with samples taken from that well.

4.2 Transfer Blanks.

Transfer blanks will be used for VOA samples according to a schedule set by the sample collection task leader. Water for the transfer blank is contained in a labeled bottle filled with distilled water in the laboratory. This portion of the procedure is carried out under the sample preparation task.

9 3 1 2 7 6 0 2 0 1 2

Fill transport blank (labeled well name with suffix - T) from the labeled bottle containing the distilled water. Perform the transfer near the well where the field samples are being collected. This transfer should be done at the approximate time the VOA sample is taken. The transport blank should be filled, using the same procedure for the VOA sample. Pour carefully, allowing no headspace or entrained bubbles.

Put the vial into the cooler with samples taken from the field samples.

4.3 Intralaboratory Comparison Samples.

Fill duplicate sample bottles. Treat these samples exactly like other field samples.

4.4 Interlaboratory Comparison Samples.

Duplicate samples for interlaboratory comparison will be collected from the same wells used for duplicate sampling for intralaboratory comparison, and on the same schedule as duplicate intralaboratory sampling.

After collection, these samples are placed into the RPT refrigerator, awaiting transport to the alternate laboratories. The Chain of Custody forms should accompany the samples to those analytical laboratories.

Samples will be taken to the alternate laboratory by a designee of the sample analysis task leader.

4.5 Blanks.

Laboratory blank samples containing distilled water, (sample number 0899) are filled in the analytical laboratory under the sample preparation task.

Blanks are picked up by the RPTs at the facility used for sample preparation and delivered to UST with the field samples.

4.6 Blind Standards.

Blind standards shall be made up by a designee of the quality control task leader, and shall be delivered to the RPT refrigerator.

RPT's sign and date the chain of custody form, and deliver the samples to UST.

Additional QC samples may be delivered directly to UST by the Quality Control task leader or a designee.

9 3 1 2 7 6 0 2 0 1 3

REVIEW OF QUALITY CONTROL PROCEDURES
FOR COLLECTION OF SAMPLES

Authors: Roseanne L. Aaberg/Khris B. Olsen

Date of Transmittal to Reviewers: June 17, 1987

Reviewers:

J. C. Evans	7/1/87 Date
R. Schalla	7/1/87 Date
P. A. Eddy	7-1-87 Date
G. W. Last	7-7-87 Date
M. S. Hanson	7/7/87 Date
T. J. McLaughlin	7/14/87 Date

9312750014

ATTACHMENT 1 - PART 14
(25 pages)

QUALITY CONTROL PLAN FOR RCRA COMPLIANCE PROJECTS

Roseanne L Aaberg 12/31/87
R.L. Aaberg, Quality Control Task

Project Manager, 183-H Basins

12-31-87
Issue Date

9 3 1 2 7 6 0 2 0 1 5

QUALITY CONTROL PLAN FOR RCRA COMPLIANCE PROJECTS

SUMMARY

The Quality Control Plan for the RCRA Compliance projects provides background information, and current status of the QC Task as well as a an outline of subtasks to be performed in FY 1988. This plan defines the basic principles of quality control (QC) and the scope and objectives of the QC Task, and details the implementation of the QC plan. A related document, P-7, Quality Control Procedures for Collection of Samples, gives procedures for the several types of QC samples described in this plan.

The topics covered in this plan are as follows:

Basic Principles of Quality Control
Scope of QC Task
Definition of acceptable results
Results Requiring Action
Routine QC Monitoring
Reporting of QC data

Appendix A: Schedule for Blind Standards for FY 88
Appendix B: Statistical Summary Lists (Regressions)
Appendix C: QC Data Base

BASIC PRINCIPLES of QUALITY CONTROL

Three basic principles of QA and QC, (based on a memo from R.O. Gilbert, dated 12-13-85). concerning quality control are as follows

1. The objective of QA programs for analytical measurements is to reduce measurement errors to agreed upon limits to assure that the results have a high probability of being of acceptable quality.

2. When properly conceived and executed, a quality control program will result in a measurement system operating in a state of statistical control, which means that errors have been reduced to acceptable levels and have been characterized statistically.

3. The establishment of a system of control charts is a basic principle.

9 3 1 2 7 6 0 2 0 1 6

SCOPE OF THE QC TASK

The main focus of the QC task is to assure that analytical results reported by the primary analytical laboratory (currently U.S. Testing) are of acceptable quality. Results of both internal UST and external checks are monitored by the QC task, and are reported monthly. Data monitored by the QC task include reports issued by UST, results of EPA- and DOE-sponsored laboratory evaluations, analysis of blind standards, and interlaboratory comparisons with duplicate field samples. These data are discussed below.

The Quarterly QC Report, issued by UST covers internal quality control data including blanks, matrix spike recoveries, and surrogate recoveries. Control limits are established, and any discrepant results and corrective actions are discussed.

Results of EPA-sponsored Performance Evaluations are reported to PNL. UST participates in the Water Supply and Water Pollution Performance Evaluations which deal with hazardous chemicals. UST also participates in the EPA-sponsored Laboratory Intercomparison Studies Program and the DOE-sponsored Quality Assessment Program (QAP), which cover radioactive constituents.

Blind standards are sent to UST by the Quality Control Task, usually on a quarterly basis. Additional samples are sent to check out problem areas, and to assure that corrective action has been taken. Details concerning blind samples are covered in the Monitoring and Reporting section of this Plan.

Interlaboratory comparisons with field samples are performed routinely to confirm results, and to pick out discrepant results to determine when problems exist. Details concerning interlaboratory comparisons are covered in the Monitoring and Reporting section.

In addition, data from the compliance projects are reviewed, and unusual results are brought to the attention of the sample analysis task leader, or UST personnel, as appropriate.

Procedures related to quality control are developed as needed. Procedure P-7, Quality Control Procedures for collection of samples (issued 7/23/87) specifies responsible staff and procedures for submitting transport blanks, transfer blanks, intralaboratory comparison samples (replicates), interlaboratory comparison samples, blanks, and blind standards.

9 3 1 2 7 6 0 2 0 1 7

DEFINITION OF ACCEPTABLE RESULTS

Limits of performance, acceptable without corrective action are as follows:

The acceptance limit for blind standards is ± 2 standard deviations (s.d.), based on statistics from EPA Performance Evaluation (PE) studies[a]. The limits may be relaxed by the QC task leader, for individual cases in which the results are near the detection limit for the analysis. In cases where PE study data are not available, acceptable results may be defined based on similar analyses. (A list of analyses for which statistics are available and the range of concentrations to which they apply, and a list of constituents for which statistics are not available are given in Appendix B.)

In interlaboratory comparisons using field samples, differences between labs of 2.8 s.d. are allowed. This criterion is based on the reproducibility limit, with 95% confidence that random error is not responsible for the difference[b].

RESULTS REQUIRING ACTION

When unacceptable differences occur in the analysis of blind standards or interlaboratory comparisons, the cause shall be investigated. Additional samples may be directed to the laboratory in order to determine or check the adequacy of corrective action.

When discrepancies occur in interlaboratory comparisons, an additional lab or labs may be called on to help resolve the differences. Additional blind standards may also be used for this purpose.

When the cause of a discrepancy is determined, appropriate corrective action will be decided upon by the parties involved. Discrepancies with undetermined cause will be logged by the QC task leader, to keep track of patterns of occurrence.

(a) Personal communication from Paul W. Britton, Staff Statistician, Quality Assurance Branch, Environmental Monitoring and Support Laboratory (USEPA), Cincinnati, Ohio 45268, FTS 684-7325. Documents dated 10/84 and 6/86. "Estimation of Acceptance Limits for Drinking Water Laboratory Performance Evaluation" and Estimation of Acceptance Limits for Water Pollution Laboratory Performance Evaluation".

(b) Based on a note from Rick Bates, dated 3-02-87, which reference ASTM E 456-83a.

9 3 1 2 7 6 0 2 0 1 8

ROUTINE QC MONITORING

The QC program for RCRA compliance work uses various methods to monitor the quality of analytical data. These include the use of 1) replicate samples, 2) blind standards, 3) interlaboratory comparisons with field samples, 4) interlaboratory comparisons with blind standards, and 5) blanks.

The following section outlines each of these methods used to monitor the quality of analytical data and provides information on the purpose and approach of each. For each type of QC sample, the level of effort recommended by the EPA cited below is from a draft document Quality Assurance Manual for Waste Management Branch Investigations (February 1986). In addition, the status of implementation for each type of QC sample or method is summarized.

9 3 1 2 7 6 0 2 0 1 9

1. Replicate Analyses of routine Groundwater Samples.

   Purpose: to establish how well the laboratory can reproduce its measurements within acceptable limits.

   Approach: Each sampling period, submit at least two sets of duplicate samples. To evaluate precision, one field replicate per 20 samples or one per sample event is recommended by EPA 1986.

   IMPLEMENTATION: Analysis of two replicate samples of at least 1 in 20 ground water samples from each sampling network are sent to the primary laboratory. The labels for these replicates are included in the regular production schedule. Samples analyzed in replicate are also analyzed by alternate laboratories.

   Wells chosen for routine replicate and interlab analyses:

183-H Area	1-H4-4 and 1-H4-7
300 Area	3-1-13 and 3-1-16A.
NRDW/Landfill	6-24-34B
1325-N/1301-N	1-N-36
1324-N	(To be determined)
Sitewide	6-50-53, 6-49-57; additions vary
200-E and 200-W	(to be determined)

   Additional samples are sent, as needed. Changes may be made in the chosen wells, depending on analytical results and sampling schedule.

2. Blind Standards

   Purpose: Estimate the bias of an analytical laboratory procedure; determine when the bias exceeds control limits.

Approach: Submit blind duplicate samples from a large standard sample to UST with each shipment of routine samples. Because of holding time restrictions, this approach is not always practical. Alternately, QC samples from EPA (which are made up in large batches) may be made up fresh each time. High, medium, and low concentrations should be checked.

A list of quality control samples available from EPA and made up in-house is given in Table 1. QC samples shall, as possible, cover the whole spectrum of analyses performed by U.S. Testing. The frequency of analyses shall be quarterly or as necessary, determined by the importance of the analysis to the projects, and the performance of the laboratory. Analyses for constituents never found in field samples may be less frequent. Samples for the TOX and TOC analyses, which are screening analyses, are not performed.

Gross Alpha and Gross Beta analyses, also screening analyses, are done bimonthly in the EPA "Crosscheck" program. Occasional check on these analyses may be advised.

Analysis: Acceptance of data based on regressions from EPA PE studies, when applicable.

IMPLEMENTATION: A variety of samples have been procured from the EPA. In addition, blind standards have been made in-house as a check on analyses for which there are no EPA standards.

A schedule for submitting blind samples to UST recommended for FY 1988, is given in Appendix A.

Internal (UST) quality control measures include matrix spike recovery and surrogate recovery. Control charts for internal QC procedures (blanks, matrix spikes, and surrogates) are done by UST, and reported quarterly in a quality control report.

TABLE 1. Quality Control Samples for RCRA Compliance Project.

SAMPLE TYPE	UST ANALYSIS CODE
METALS	
ICAP-19	726, A20, A22, A23,751
ICAP-7	725
Trace Metals	725, A20, A21, A22, A51
Trace Metals WP I	726, A20, A21, A22, A51
Trace Metals WP II	726, A23
Trace Metals WP III	725, A20, A21, A22, A51
INORGANIC	
Mineral/Inorganic	735
Nutrient #3	735
Nutrient #4	A80
WS Nitrate/Fluoride	735
Cyanide	C70
* Sodium Perchlorate (Perchlorate)	C77
* Sodium Sulfhydrate (Sulfide)	C78
ORGANIC	
Volatile Organic I-VII	730, 731
GC/MS Acids	733
GC/MS Base/Neutral I, II	733
GC/MS Base Neutral III	733
* 1-Acetyl-2-thiourea	727
* Thiourea	A24
* Ethylene Glycol	C81
* N-Propylamine	736
* Acrylamide	736
* Hydrazine	C53
X Dioxin	C86
PESTICIDES/HERBICIDES	
GC/MS Pesticides	728
Chlorinated Hydrocarbon Pest.	728
WS Herbicides	738
* Dimethoate	734
RADIONUCLIDES	
XX Uranium	124
XX Radium	181
XX Alpha (no specific sample	212
XX Beta except from "crosscheck")	111

* Standards made in-house.
X New in-house standard to be added
XX Standard to be ordered from EPA Environmental Monitoring Lab, Las Vegas.

3. Interlaboratory Comparisons Using Field Samples
Purpose: to determine if and when one or more laboratories disagree with other laboratories.

Approach: On a scheduled periodic basis, each laboratory is provided with subsamples from a homogeneous field groundwater sample of unknown concentration. Ideally, there should be at least three laboratories involved: UST, a Hanford laboratory, and one non-Hanford laboratory that is independent of DOE. The homogeneity of field should be evaluated by a referee lab that analyzes several aliquots (3 or more) from the field sample.

IMPLEMENTATION: Samples are being sent individual PNL labs on a regular basis. Four PNL labs perform the analyses: ion analysis by ion chromatography and ammonium ion by specific electrode; Volatile Organic Compounds (VOC) by GC/EC; metals by ICP, and alpha and beta by direct counting. Samples sent to alternate labs are analyzed in replicate by UST.

4. Interlaboratory Comparisons Using Samples with Known Concentrations.
Purpose: Estimate the bias of different laboratories. Compare labs on the basis of their bias.

Approach: Send appropriate blind standards to labs participating in the interlaboratory comparison for field samples. Participation in Performance Evaluation programs is recommended by EPA.

IMPLEMENTATION: The blind standards submitted to UST quarterly, is discussed in part 2. The blind standards of the appropriate type are subsampled, and sent to the participating laboratories.

In addition, UST participates in EPA PE Studies for both Water Supply and Water Pollution. UST reports the results to PNL. This is an independent evaluation of the laboratory.

UST also participates in laboratory comparison studies for radiochemical analyses including the EPA-sponsored Laboratory Intercomparison Studies Program and the DOE-sponsored Quality Assessment Program (QAP).

9 3 1 2 7 6 0 2 0 2 2

5. Blanks

Purpose: Determine if field and/or laboratory contamination of samples occurs.

Approach: Submit blanks with each sampling period. The level of effort recommended by the EPA (USEPA 1986) includes the following:
Transport blank, 1 per 20 samples or sampling event
Transfer blank, 1 per 20 samples or sampling event.
Lab (Reagent) blank: 1 batch per run. (Lab internal check)
Containers: 1 blank per lot.

IMPLEMENTATION: Recommended implementation: two transport and transfer VOA blanks per area per sample event (each time wells are sampled for a project) Presently, one blank is submitted to each laboratory for each type of analysis requested by the project (reagent blank). This also serves as a check for container contamination.

The sample collection task leader has the responsibility to implement the use of transfer blanks.

REPORTING of QC DATA

Currently, QC data are reported via monthly reports to the Project Manager. Tables of interlaboratory comparisons and blind standard results, along with explanations of discrepancies, are included.

A data base devoted to replicate and interlaboratory results is under development at this time. The QC Data Base, with programming in Fortran and DBase III, will be designed to identify outlying values, to aid in the analysis of QC data, and to streamline reporting. The QC Data Base will include a limited subset of data from the HGWDB, plus information dealing with replicate and blind standards. The data base is described briefly in Appendix C.

Prior to implementation of a QC data base, reporting has been included in monthly reports, and is on floppy disk and hard disk. These data will be incorporated into the data base as time permits. Discrepancies between replicates will be flagged, and an explanation of discrepancies will be sought from the lab. Such extra notes will be recorded in a memo field in the QC data base.

9 3 1 2 7 6 0 2 0 2 3

REFERENCES

ASTM 1983. Standard Terminology for Statistical Methods. E 456 - 83a. (pp. 402-405)

USEPA 1986. Quality Assurance Manual for Waste Management Branch Investigations (Draft). Prepared by the Regional Quality Assurance Management Office, USEPA Region 10, in cooperation with the Waste Management Branch. (February 1986).

9 3 1 2 7 5 0 2 0 2 4

APPENDIX A: SCHEDULE FOR BLIND STANDARDS FOR FY 88

The proposed QC sample frequency is based on several factors. These factors are listed below, in order of importance: 1) constituents which are detected at or above regulated or screening levels 2) constituents which are detected, but at levels below regulated or screening levels, and 3) constituents which may be present, based on disposal records, but have not been detected. The frequency of testing for the constituent and the complexity of the analysis method are also considered.

Tables A.1 through A.3 list ground water contaminants in three categories: 1) those which appear in levels above drinking water standards; 2) those which have been detected at levels below drinking water standards, and 3) those which have not appeared above the detection limit. Contaminants from th 183-H and 300 area compliance projects are emphasized, becuase these projects have generated the most chemical monitoring data.

According to the Summary in Table A.1, the most important contaminants are nitrate, volatile organic compounds, metals, and gross alpha and gross beta contamination. Table A.2 shows that other metals and radioactive materials are also detected. Table A.3 shows that pesticides and herbicides, along with ABN compounds are not detected, thus require less attention.

TABLE A.1. Levels of Contaminants in Compliance and Sitewide Studies: Constituents exceeding Drinking Water Standards or screening levels.

Project	Contaminant
183-H Area	Nitrate
	Chromium
	Gross Alpha
	Gross Beta
300 Area	Gross Alpha
	1,1,2-trichloroethylene (A69)
	Trans 1,2-dichloroethene (A91)
	Fluoride
Sitewide	Cyanide
	carbon tetrachloride(A61)
	Methlene chloride (A93)
NRDW/Sanitary Landfill	1,1,1-Trichloroethane

9 3 1 2 7 6 0 2 0 2 5

TABLE A.2. Levels of Contaminants in Compliance and Sitewide Studies: Detected but below screening levels

Class of Contaminant	Constituents
Metals	Cu, Fe, Ba, Zn, Al, V, Mn, Ni, Sr, Pb, As, Se
Anions	Sulfate, Chloride
Nutrient	Ammonium
Volatile Organics	Chloroform (A80) Methylene chloride (A93) 111 Trichlorothane (A67) Perchloroethylene (A70)
Radioactive contaminants	Uranium Radium

TABLE A.3. Contaminants in Compliance and Sitewide Studies: Site-Specific and other Contaminants which have not been Detected

Site-Specific Contaminants:

Area	Contaminant
100 Area	Cyanide Perchlorate Hydrazine
300 Area	Ethylene glycol Dioxin ABNs

Other Undetected Constituents:

Pesticides 734, 737, 738
Herbicides 728, 729
Enhanced VOAs (731) [a]
Enhanced thiourea 729, Thiourea (A24) [b]
ABNs 732, 733 [c]
Direct Aqueous Injection
Citrus Red C87
Dioxin C86
Ethylene glycol C81
Perchlorate C77

(a) Except A91 Trans 1,2-Dichloroethene, detected in the 300 Area.
(b) The compound was detected once, but this analysis is suspect because constituent was detected only in the first months of sampling (Hoboken data) and was close to the detection level.

(c) This analysis includes C57 phenol; Phenol has been detected only with the low detection level analysis.

9 3 1 2 7 5 0 2 0 2 6

Based on the information in Tables A.1 though A.3, a schedule for submitting QC samples is presented in Table A.4. Changes may be made as necessary.

TABLE A.4. Proposed QC sample schedule for Compliance and Sitewide: FY 1988

Type	Analyses	QC Samples Number/Frequency	QC Samples Number/Yr
ASSESSMENT			
*	Metals (740/741)	2/Qtr	8
*	As, Se, Pb (H37,H39,H41)	4/yr	4
	Hg (H38)	2/yr	2
*	Anions (735)	2/Qtr	8
*	VOAs (730/731)	2/Qtr plus adds	12
*	Gross Alpha	(a)	-
*	Gross Beta	(a)	-
	Radium	(a)	-
*	Ammonium (A80) (b)	2/Qtr	8
	Cyanide (C70) (b)	4/yr	4
	Sulfide (C78) (b)	4/yr	4
ASSESSMENT QUARTERLY			
	Uranium	(a)	-
	Phenol (Low level) (H57)	4/yr	4
ND	Pesticides (728/729)	4/yr	4
ND	Herbicides (738)	2/yr	4
ND	Perchlorate (C77)	2/yr	2
9905 LIST: QUARTERLY			
	Thallium (A23)/H40	2/yr	2
ND	ABN enh (733)	4/yr	4
ND	Direct Aq. Injection (736)	-- (c)	-
ND	Thiourea enh (727)	2/yr	2
ND	Pesticides enh (729)	(see 728, above)	-
ND	Herbicides enh (737)	-- (d)	--
ND	Phosphorus Pesticides (734)	2/yr	2
ND	Ethylene Glycol (C81)	1/Qtr	4
ND	Citrus Red (C87)	(e) (d)	--
ND	Dioxin (C86) (b)		2

* This analysis is included in interlaboratory analysis.
ND This constituent has not been detected.

(a) Standards to be not yet acquired; May be available from EPA Environmental Monitoring Lab, Las Vegas, Nevada.
(b) Analysis for 300 area project.
(c) This analysis has failed to detect constituents in spiked samples. An additionl batch of samples may be sent with the intention of eliminating this analysis.
(d) No QC standard identified for this analysis
(e) Procedure not yet developed for the dioxin QC sample.

9 3 1 2 7 5 0 2 0 2 7

APPENDIX B: EPA REGRESSION FORMULAS

Appendix B lists constituents for which regression formulas for true value and standard deviation are available. The regrssions are based on data from EPA Performance Evaluation Studies.

ANALYSES GROUP/ CONSTITUENT		REGRESSION WS	REGRESSION WP	RANGE (ppb) WS	RANGE (ppb) WP
METALS 725					
Zinc	A04		X		
Calcium	A05	X	X		
Barium	A06	X			
Cadmium	A07	X	X		
Chromium	A08	X	X		
Silver	A10	X	X		
Sodium	A11	X	X		
Nickel	A12		X		
Copper	A13		X		
Vanadium	A14		X		
Aluminum	A16		X		
Manganese	A17		X		
Potassium	A18		X		
Iron	A19		X		
Magnesium	A50		X		
ENHANCED METALS, 726 ABOVE PLUS THE FOLLOWING:					
Berylliam	A01		X		
Osmium	A02				
Strontium	A03				
Antimony	A15		X		
INDIVIDUAL METAL ANALYSES:					
Arsenic	A20	X	X		
Mercury	A21	X	X		
Selenium	A22	X	X		
Thallium	A23		X		
Lead (GF)	A51	X	X		

NO STATISTICS FOR THE FOLLOWING METALS:
Osmium A02/H34
Strontium A03/H35

ANALYSES GROUP/ CONSTITUENT			REGRESSION WS	REGRESSION WP	RANGE (ppb) WS	RANGE (ppb) WP
ANIONS (735)						
Nitrate		C72	X	X		
Sulfate		C73		X		
Fluoride		C74	X	X		
Chloride		C75		X		
Phosphate		C76		X		
Ammonium ion		C80		X		
Alkalinity			X	X		
VOAs (730)						
TETRANE	Tetrachloromethane (Carbon Tetrachloride)	A61	X	X		
METHONE	Methyl ethyl ketone	A64				
1,1,1-T	1,1,1-trichloroethane	A67		X		
1,1,2-T	1,1,2-trichloroethane	A68				
TRICENE	Trichloroethylene	A69	X	X		
PERCENE	Perchloroethylene	A70	X	X		
OPXYLE	Xylene-o,p	A71		X		
M-XYLE	Xylene-m	B14		X		
CHLFORM	Chloroform (Trichloromethane)	A80	X	X		
METHYCH	Methylene chloride (dichloromethane)	A93		X		
NO STATISTICS FOR THE FOLLOWING: Methylethyl Ketone; 1,1,2-trichloroethane						
ENCHANCED VOA (731)						
BENZENE	Benzene	A62	X	X		
TOLUENE	Toluene	A66		X		
CHLBENZ	Chlorobenzene	A78		X		
1,2-DIC	1,2-dichloroethane	A90	X	X		
DICETHY	1,1-dichloroethylene	A92	X			
BROMORM	Bromoform	B08	X	X		
BDCM	Bromodichloromethane	I42	X	X		
CDBM	Chlorodibromomethane	I43	X	X		
VINYIDE	Vinyl chloride	B13	X			

9 3 1 2 7 6 0 2 0 2 9

ANALYSES GROUP/ CONSTITUENT			REGRESSION WS	REGRESSION WP	RANGE (ppb) WS	RANGE (ppb) WP
A/B/N	732					
12-dben	1,2-dichlorobenzene	B61		X		
13-dben	1,3-dichlorobenzene	B62		X		
14-dben	1,4-dichlorobenzene	B63	X	X		
TRICHLB	1,2,4-trichlorobenzene	C43		X		
ENHANCED A/B/N 733 CHECK COLUMNS						
STYRENE		I34		X		
Ethylbenzene,				X		
N-Propylbenzene,				X		
O-chlorotoluene,				X		
1,3,5-trimethylbenzene,				X		

9 5 1 2 7 5 0 2 0 3 0

ANALYSES GROUP/ CONSTITUENT			REGRESSION WS	REGRESSION WP	RANGE (ppb) WS	RANGE (ppb) WP
PESTICIDES 728						
ENDRIN	Endrin	A33	X	X		
METHLOR	Methoxychlor	A34	X			
TOXAENE	Toxaphene	A35	X			
Lindane and isomers			X			
a-BHC	Alpha-BHC	A36		X		
b-BHC	Beta-BHC	A37		X		
g-BHC	Gamma-BHC	A38		X		
d-BHC	Delta-BHC	A39		X		
ENHANCED PESTICIDES 729 ABOVE, PLUS FOLLOWING:						
DDD	DDD	A40		X		
DDE	DDE	A41		X		
DDT	DDT	A42		X		
HEPTLOR	Heptachlor	A43		X		
HEPTIDE	Heptchlor epoxide	A44		X		
DIELRIN	Dieldrin	A46		X		
ALDRIN	Aldrin	A47		X		
CHLOANE	Chlordane	A48		X		
ENDO1	Endosulfan I	A49		X		
ENDO2	Endosulfan II	A52		X		
CHLLATE	Chlorobenzilate	C62				
HERBICIDES, 738						
2,4-D	2,4-D	H13	X			
2,4,5TP	2,4,5-TP silvex	H14	X			
ENHANCED HERBICIDES, 737 ABOVE, PLUS FOLLOWING:						
2,4,5-T	2,4,5-T	H15				
PHOSPHORUS PESTICIDES, 734						
TETEPYR	Tetraethylpyrophosphate	C61				
CARBPHT	Carbophenothion	C63				
DISULFO	Disulfoton	C64				
DIMETHO	Dimethoate	C65				
METHPAR	Methyl parathion	C66				
PARATHI	Parathion	C67				

9 3 1 2 7 0 2 0 3 1

NO STATISTICS AVAILABLE:

DIRECT AQUEOUS INJECTION, 736

ENHANCED THIOUREA, 737

Hydrazine	C53
Perchlorate	C77
Sulfide	C78
Ethylene glycol	C81
Dioxin	C86
Citrus red	C87

ADDITIONAL STATISTICS:

WATER SUPPLY (WS)

Misc. parameters Including pH

WATER POLLUTION

Several parameters, including pH

PCBs: Arochlor 1016, 1221, 1232, 1242, 1248, 1254, 1260, 1262;

APPENDIX C: QUALITY CONTROL DATA BASE

A data base devoted to replicate and interlaboratory results is under development at this time. The QC Data Base, with programming in Fortran and DBase III, is designed to aid in the analysis of QC data, and to streamline reporting. The QC Data Base will include a subset of data from the HGWDB, plus information dealing with replicate and blind standards.

PURPOSE

Allow manipulation and graphical display of data
Provide convenient access to data
Provide entry of alternate lab data for interlaboratory comparison
Provide entry of target values for blind standards
Automate routine processing
Automate inspection of data for outliers

CONTENTS:

Interlaboratory comparisons
Replicates
Blind standards

STRUCTURE

Subset of HGWDB, plus data unique to the QC task
Overlap of QC data, accessed from HGWDB

CORRESPONDENCE BETWEEN RELATIONS:

QC DATA BASE	HGWDB
MAIN	ANADAT
CONSTITUENT	CONCOD
WELLS	WELCOD
LABS	
INT_SCHEDL	
STD_SCHEDL	
STD_RESULT	
STANDARD (type)	

PARAMETERS: FOLLOWING

9 3 1 2 7 5 0 2 0 3 3

RELATION	FIELD NAME	DATA TYPE	CALC	INPUT	Description
				D - HGWDB I - MANUAL INPUT	
MAIN					
X	C_CODE	CHARACTER		D	Constituent Code
X	C_DATE	DATE		D	Collection Date
	R_DATE	DATE		D	Report Date
	UST_NO	CHARACTER		D	UST number
X	D_NO	CHAR		D	Duplicate number
X	W_CODE	CHARACTER		D	Well Code
	LESS_THAN	CHARACTER		D	Less than Flag UST
	A_VALUE	NUMERIC		D	Analysis Value UST
	OUTLIER	LOGICAL	*		Outlier, UST
?	L_CODE	CHAR		I	Lab code, lab 1
	LESS_1	CHAR		I	Less than, alt lab 1
	VALUE_1	NUM		I	analysis value, alt 1
	OUTLIER_1	LOGICAL	*		Outlier, alt lab 1
?	L_CODE	CHAR		I	Lab Code, lab 2
	LESS_2	CHAR		I	Less than, alt lab 2
	VALUE_2	NUM		I	analysis value, alt 2
	OUTLIER_2	LOGICAL	*		Outlier, alt lab 2
?	L_CODE	CHAR		I	Lab Code, lab 3
	LESS_3	CHAR		I	Less than, alt lab 3
	VALUE_3	NUM		I	analysis value, alt 3
	OUTLIER_3	LOGICAL	*		Outlier, alt lab 3
?	L_CODE	CHAR		I	Lab Code, lab 4
	LESS_4	CHAR		I	Less than, alt lab 4
	VALUE_4	NUM		I	analysis value, alt 4
	OUTLIER_4	LOGICAL	*		Outlier, alt lab 4
	SIGDIF	NUMERIC	*		Significant Difference
	DIF1	NUMERIC	*		? HOW TO COMPUTE difference
	DIF2	NUMERIC	*		MUST KNOW WHICH LABS
	DIF12	NUMERIC	*		did analyses: see schedule
	A_COMMENT	MEMO			

RELATION	FIELD NAME	DATA TYPE	CALC INPUT	Description
			D - HGWDB I - MANUAL INPUT	
CONSTITUENT				
	C_CODE	CHAR	D	Constituent Code
	C_NAME	CHAR	D	Constituent Name
	L_NAME	CHAR	D	Constituent long name
	D_LIMIT	NUM	D	Detection limit
	M_P_LIMIT	NUM	D	Maximum Permissible limit
	R_AGENCY	CHAR	D	Regulating Agency
	A_UNITS	CHAR	D	Analysis Units
	CAL_L	NUM	I ?	calibration limits
	CAL_H	NUM	I	
	REGR	LOGICAL	I	Regression
	REGR_A	NUM	I	Regr. Parameters
	REGR_B	NUM	I	
	REGR_REF	CHAR	I	Reference
	REGR_L	NUM	I	Regression range
	REGR_H	NUM	I	
	ALT_PC	NUM	I	Alternate, % difference
	I_GROUP	CHAR		Analysis Group (Interlab)
	A_GROUP	CHAR		Analysis Group (UST)
	Enh_GROUP	CHAR		Enhanced Group (UST)

9 3 1 2 7 0 2 0 3 5

RELATION	FIELD NAME	DATA TYPE	CALC INPUT	Description
			D - HGWDB	
			I - MANUAL INPUT	
WELLS				
	W_CODE	CHARACTER	D	Well Code
	W_NAME	CHARACTER	D	Well Name
LABS ???				
	LAB_CODE	CHAR	I	Lab Code
	LABNAME	CHAR	I	Lab Name
... or	VALUE_1 corresponds to		PNL(Veverka)	
	VALUE_2		PNL(Stromatt)	
	VALUE_3		HEHF	
	VALUE_4			
INT_SCHEDL (INTERLAB SCHEDULE)				
	DATE			
	MONTH		I	Month
	YEAR		I	Year
	I_GROUP	CHAR		Interlab group code
	LAB_1	LOGICAL	I	Lab 1 analyzed this group
	LAB_2	LOGICAL	I	Lab 2 analyzed this group
	LAB_3	LOGICAL	I	Lab 3 analyzed this group
	LAB_4	LOGICAL	I	Lab 4 analyzed this group
			If LAB_N is TRUE, look for LESS_N, VALUE_N, OUTLIER_N	
STD_SCHEDL (STANDARD SCHEDULE)				
	DATE	——		Month, year
	MONTH			Month
	YEAR			Year
	W_CODE	CHAR	I	Well code (0799,3999) (add 0599, 0699)
	STD_TYPE	CHAR	I	Standard type
	DILUT	NUM	I	Dilution (X stock conc.)
?	A_GROUP	CHAR	I	UST group code
	I_GROUP	CHAR	I	Interlab Group Code
???	LAB_1	LOGICAL	I	Lab 1 analyzed this sample
	LAB_2	LOGICAL	I	Lab 2 analyzed this sample
	LAB_3	LOGICAL	I	Lab 3 analyzed this sample
	LAB_4	LOGICAL	I	Lab 4 analyzed this sample
			If LAB_N is TRUE, look for LESS_N, VALUE_N, OUTLIER_N	
STANDARD (STANDARD TYPE)				
	C_CODE	CHAR		Constituent Code
	STD_TYPE	CHAR		Standard type
	S_CONC	NUM		Stock concentration
?	A_GROUP	CHAR		Group code, UST analysis
?	I_GROUP	CHAR		Group Code, interlab

9 3 1 2 7 6 0 2 0 3 6

RELATION	FIELD NAME	DATA TYPE	CALC	INPUT	Description
				D - HGWDB I - MANUAL INPUT	
STD_RESULT (STANDARD RESULTS) (similar to results in MAIN)					
X	DATE				Month, Year
X	W_CODE	CHAR			Well Code
X	C_CODE	CHAR			Constituent Code
X	D_NO	NUM			Duplicate number ?
	TARGET	NUM	*		Target value
	RANGE_H	NUM	*		High end of target range
	RANGE_L	NUM	*		Low end of target range
	LESS_THAN	CHAR		D	Less than Flag, UST
	A_VALUE	NUM		D	Analysis value, UST
	OUTLIER	LOGICAL	*		Outlier, UST
	LESS_1	CHAR		I	Less than, alt lab 1
	VALUE_1	NUM		I	analysis value, alt 1
	OUTLIER_1	LOGICAL	*		Outlier, alt lab 1
	LESS_2	CHAR		I	Less than, alt lab 2
	VALUE_2	NUM		I	analysis value, alt 2
	OUTLIER_2	LOGICAL	*		Outlier, alt lab 2
	LESS_3	CHAR		I	Less than, alt lab 3
	VALUE_3	NUM		I	analysis value, alt 3
	OUTLIER_3	LOGICAL	*		Outlier, alt lab 3
	LESS_4	CHAR		I	Less than, alt lab 4
	VALUE_4	NUM		I	analysis value, alt 4
	OUTLIER_4	LOGICAL	*		Outlier, alt lab 4
PARAMETERS					
	NSD	NUM			Number of Std. Deviations for interlab analysis
	NSTD	NUM			Number of Std. Deviations for blind samples
	WSD	NUM			No. of SD for warning limits -interlab studies.
	WSTD	NUM			No. of SD warning limits for blind standards

9 3 1 2 7 5 0 2 0 5 7

CALCULATED FIELDS

RELATION	FIELD NAME	DATA TYPE	CALCULATION from FIELD(RELATION) FIELD(function of field)

Interlab Results:

To compare the results of analyses between/among labs (A_VALUE, VALUE_1, VALUE_2, etc); Compare analysis values with a range that is ± 2.8 std. deviations (based on UST results). Flag as OUTLIERs (T,F) values that are outside this range.

MAIN				
	OUTLIER	LOGICAL	SIGDIF, DIF1, DIF2 or SIGDIF, AVALUE, VALUE_N ...	
	SIGDIF	NUMERIC	A_VALUE (MAIN), REGR(CONSTIT)	
???	DIF1	NUMERIC	A_VALUE, VALUE_1	These are intermediate values, computed to determine OUTLIERS may not be in field...
	DIF2	NUMERIC	A_VALUE, VALUE_2	
	DIF12	NUMERIC	VALUE_1, VALUE_2	
	OUTLIER_1	LOGICAL	SIGDIF, DIF1 (or A_VALUE, VALUE_1)	
	OUTLIER_2	LOGICAL	SIGDIF, DIF2 (or A_VALUE, VALUE_2)	
	... etc			

Results of Blind Standards:

Compare analysis values with the calculated TARGET VALUE. Flag as OUTLIERs values that are outside this range.

STD_RESULT (STANDARD RESULTS) (similar to results in MAIN)

TARGET(c_code)	NUM	STD_TYPE, S_CONC(c_code) (STANDARD) STD_TYPE, DILUT (STD_SCHEDL)
RANGE_H	NUM	TARGET, REGR (CONSTIT)
RANGE_L	NUM	TARGET, REGR (CONSTIT)
OUTLIER	LOGICAL	A_VALUE, RANGE_H, RANGE_L
OUTLIER_1	LOGICAL	VALUE_1, RANGE_H, RANGE_L
OUTLIER_2	LOGICAL	VALUE_2, RANGE_H, RANGE_L
OUTLIER_3	LOGICAL	VALUE_3, RANGE_H, RANGE_L
OUTLIER_4	LOGICAL	VALUE_4, RANGE_H, RANGE_L

Results of Replicate Analyses:
From MAIN; analysis similar to that for outliers; use difference between individual results; average for comparison.

RELATION	FIELD NAME HGWDB (description)	FIELD NAME QC DATA BASE	DATA TYPE	calc *	input D - HGWDB I - input
MAIN					
ANADAT					
	CONSTITUENT_CODE	C_CODE	CHARACTER		D
	ANALYSIS_VALUE	A_VALUE	NUMERIC		D
	LESS_THAN_FLAG	LESS_THAN	CHARACTER		D
	REPORT_DATE	R_DATE			D
	UST_NO	UST_NO	CHARACTER		D
	DUPLICATE NO	D_NO	CHAR		D
WELCOD FIELDS					
	WELL_CODE	W_CODE	CHARACTER		D
WELLS					
WELCOD FIELDS					
	WELL_CODE	W_CODE	CHARACTER		D
	WELL_NAME	W_NAME	CHARACTER		D
CONSTITUENT					
CONCOD FIELDS					
	CONSTITUENT_CODE	C_CODE	CHAR		D
	CONSTITUENT_NAME	C_NAME	CHAR		D
	CONSTITUENT_LONG_NAME				D
		L_NAME	CHAR		
	DETECTION_LIMIT	D_LIMIT	NUM		D
	MAXIMUM_PERMISSIBLE_LIMIT				D
		M_P_LIMIT	NUM		
	REGULATING_AGENCY	R_AGENCY	CHAR		D
	ANALYSIS_UNITS	A_UNITS	CHAR		D

9 3 1 2 7 6 0 2 0 3 9

ATTACHMENT 2
(4 pages)

SAMPLING AND ANALYSIS PLAN FOR THE
183-H SOLAR EVAPORATION BASINS FOR 1988

WELL NAME	JAN	FEB	MAR	APR	MAY	JUN	JUL	AUG	SEP
H3-1			L			L			L
H3-2A			R			R			R
H3-2B			R			R			R
H3-2C			R			R			R
H4-3	R	R	L	R	R	L	R	R	L
H4-4	R	R	R	R	R	R	R	R	R
H4-5			R			R			R
H4-6			R			R			R
H4-7			R			R			R
H4-8			R			R			R
H4-9	R	R	R	R	R	R	R	R	R
H4-10			R			R			R
H4-11	R	R	R	R	R	R	R	R	R
H4-12A	R	R	R	R	R	R	R	R	R
H4-12B	R	R	R	R	R	R	R	R	R
H4-12C	R	R	R	R	R	R	R	R	R
H4-13			R			R			R
H4-14			R			R			R
H4-15A			R			R			R
H4-15B			R			R			R
H4-16	R	R	R	R					R
H4-17	R	R	R	R	R				R
H4-18	R	R	R	R	R	R	R	R	R

The following page lists constituents analyzed for "L" (long list) and "R" (regular list).

9 3 1 2 7 6 0 2 0 4 0

183-H SAMPLE ANALYSIS CONSTITUENTS

	L	R
TOTAL SUSPENDED SOLIDS	^	^
COLIFORM BACTERIA	^	^
BETA	^	^
URANIUM	^	
RADIUM	^	^
ALPHA	^	^
ICP METALS 6010 ENHANCED	^	^
METHOD 8330 ENHANCED	^	
PESTICIDES 8080 ENHANCED	^	
VOA METHOD 8240		^
VOA METHOD 8240 ENHANCED	^	
A/B/N 8270 ENHANCED	^	
PESTICIDES METHOD 8140	^	
NITRATE, SULPHATE.....(IC)	^	^
DIRECT AQUEOUS INJECTION	^	
HERBICIDE 8150 ENHANCED	^	
PCB	^	
FILTERED ICP METALS ENHANCED	^	^
ARSENIC	^	^
MERCURY	^	^
SELENIUM	^	^
LEAD BY GFAA	^	^
TOX	^	^
TOC	^	^
TOTAL CARBON		^
CYANIDE	^	
AMMONIUM ION	^	^
ETHYLENE GLYCOL	^	
DIOXIN	^	
CITRUS RED #2	^	
FILTERED ARSENIC	^	^
FILTERED MERCURY	^	^
FILTERED SELENIUM	^	^
FILTERED THALLIUM	^	
FILTERED LEAD	^	^
PHENOL		^

9 3 1 2 7 6 0 2 0 4 1

SAMPLING AND ANALYSIS PLAN FOR THE
300 AREA PROCESS TRENCHES FOR 1988

WELL NAME	JAN	FEB	MAR	APR	MAY	JUN	JUL	AUG	SEP
3-1-1					L				
3-1-2					L				
3-1-4					L				
3-1-6					L				
3-1-7					L				
3-1-7B**					L	R	R	R	
3-1-8					L				
3-1-9					L				
3-1-10					L				
3-1-11	W	W	W	W	W,L	W	W	W	W
3-1-12									
3-1-13					L				
3-1-13B**					L	R	R	R	
3-1-14					L				
3-1-15					L				
3-1-15B**					L	R	R	R	
3-1-16A					L				
3-1-16B					L	R	R	R	
3-1-16C					L				
3-1-17A	W	W	W	W	W,L	W	W	W	W
3-1-17B					L	R	R	R	
3-1-17C					L				
3-1-18A					L				
3-1-18B					L	R	R	R	
3-1-18C					L				
3-1-19	W	W	W	W	W,L	W	W	W	W
3-2-1					L				
3-3-7					L				
3-3-10					L				
3-4-1					L				
3-4-7					L				
3-4-11					L				
3-8-1					L				
3-8-1B**					L	R	R	R	
3-8-2					L				
3-8-3					L				
3-8-3B**					L	R	R	R	
6-S19-E13					L				
6-S30E15A					L				
3-1-3									
3-1-5									

**Proposed new intermediate wells.

The following page lists the constituents analyzed for "W" (weekly list), "L" (long list), and "R" (regular list).

9 3 1 2 7 6 0 2 0 4 2

300 AREA SAMPLE ANALYSIS CONSTITUENTS

	W	L	R
COLIFORM BACTERIA		^	^
BETA		^	^
URANIUM	^	^	
RADIUM		^	^
ALPHA		^	^
ICP METALS 6010			^
ICP METALS 6010 ENHANCED		^	
METHOD 8330 ENHANCED		^	
PESTICIDES 8080			^
PESTICIDES 8080 ENHANCED		^	
VOA METHOD 8240	^		^
VOA METHOD 8240 ENHANCED		^	
A/B/N 8270 ENHANCED		^	
PESTICIDES METHOD 8140		^	
NITRATE, SULPHATE.....(IC)	^	^	^
DIRECT AQUEOUS INJECTION		^	
HERBICIDE 8150 ENHANCED		^	
HERBICIDE 2,4-D, 2,4,5-TP SILVEX			^
PCB		^	
FILTER ICP METALS			^
FILTERED ICP METALS ENHANCED		^	
ARSENIC		^	^
MERCURY		^	^
SELENIUM		^	^
LEAD BY GFAA		^	^
TOX		^	^
TOC		^	^
CYANIDE		^	
AMMONIUM ION		^	
ETHYLENE GLYCOL		^	
DIOXIN		^	
CITRUS RED #2		^	
FILTERED ARSENIC		^	^
FILTERED MERCURY		^	^
FILTERED SELENIUM		^	^
FILTERED THALLIUM		^	
FILTERED LEAD		^	^
PHENOL			^

9 3 1 2 7 5 0 2 0 4 3

TABLE 1. Regular List of Analyses

Constituent	Collection & Preservation [a,b]	Methods[c]	Detection Limit, ppb[d]
ICP METALS			
Barium			6
Cadmium			2
Chromium			10
Silver			10
Sodium			200
Nickel			10
Copper	P, HNO3 to pH<2	SW-846, #6010	10
Vanadium			5
Aluminum			150
Manganese			5
Potassium			100
Iron			30
Calcium			50
Zinc			5
Arsenic	P, HNO3 to pH<2	SW-846, #7060	5
Mercury	G, HNO3 to pH<2	SW-846, #7470	0.1
Selenium	P, HNO3 to pH<2	SW-846, #7740	5
Lead	P, HNO3 to pH<2	SW-846, #7421	3
IC			
Nitrate			500
Sulfate			500
Fluoride	P, None	70-IC[e,f]	500
Chloride			500
Phosphate			1000
Total Organic Halogen	G, H2SO4 to pH<2 No Headspace	SW-846, #9020	10
Total Organic Carbon	G, H3PO4 to pH<2	Std. Methods #505	1000
Total Carbon	G, None	Std. Methods #505	1000

TABLE 1. (cont'd)

Constituent	Collection & Preservation[a,b]	Method[c]	Detection Limit, ppb[d]
Ammonium ion	G, H2SO4 to pH<2	Std. Methods #417 A-E	50
Phenol	G, None	SW-846, #8040	10
PESTICIDES			
Endrin			0.1
Methoxychlor	G, None	SW-846, #8080	3
Toxaphene			1
Lindane (4 isomers)			0.1
HERBICIDES			
2,4-D	G, None	SW-846, #8150	2
2,4,5-TP silvex			2
VOLATILE ORGANICS (VOA)			
Tetrachloromethane			5
Methylethyl Ketone			10
1,1,1-Trichloroethane			5
1,1,2-Trichloroethane			5
1,1,2-Trichloroethene	G, No Headspace	SW-846, #8240	5
Tetrachloroethene			5
Xylene (O,P)			5
Xylene (M)			5
Methylene Chloride			10
Chloroform			5
Hexone			10
Radium	P, HNO3 to pH<2	EPA Method #903.0, 60014-80-032	1 pCi/l
Gross Alpha	P, HNO3 to pH<2	EPA Method 680/4-75-001	4 pCi/l
Gross Beta	P, HNO3 to pH<2	EPA Method 680/4-75-001	8 pCi/l
Uranium	P, HNO3 to pH<2	Fluorometric (Hexone Extraction) UST, 20-U-03	4pCi/l
Total Dissolved Solids	P, None	Std. Methods 209	----
Coliform Bacteria	P, None	Std. Methods #908A	2.2 MPN
pH (Lab)	P, None	Std. Methods #423	----

TABLE 1. (cont'd)

Constituent	Collection & Preservation[a,b]	Method[c]	Detection Limit, ppb[d]
pH	Field Measurement	See Attachment 1	0.01 pH unit
Temperature	Field Measurement	See Attachment 1	0.1 C
Specific Conductance	Field Measurement	See Attachment 1	1 mho

(a) P = plastic, G = glass.
(b) All samples will be cooled to 4 C upon collection.
(c) Constituents grouped together are analyzed by the same method.
(d) Detection limit units except where indicated.
(e) In-house analytical method from UST Procedure Manual, UST-RT-PM-9-80, (UST 1986); based on EPA-600H-84-017, March 1984.
(f) IC = ion chromatography.

TABLE 2. Additional Constituents for Long List[h]

Constituent	Collection & Preservation[a,b]	Method[c]	Detection Limit, ppb[d]
ICP METALS, ENHANCED			
Beryllium			5
Osmium			300
Strontium	P, HNO3 to pH<2	SW-846, #6010	20
Antimony			100
Thallium	P, HNO3 to pH<2	SW-846, #7840	5
THIOUREA GROUP, ENHANCED			
Thiourea			200
1-acetyl-2-thiourea			200
1-(o-chlorophenyl) thiourea			200
Diethylstilbestrol	G, None	SW-846, #8330	200
Ethylenethiourea		(modified)	200
1-naphthyl-2-thiourea			200
N-phenylthiourea			500
PESTICIDES, ENHANCED ADDS			
4,4'-DDD			0.1
4,4'-DDE			0.1
g4,4'-DDT			0.1
Heptachlor			0.1
Heptachlor epoxide	G, None	SW-846, #8180	0.1
Dieldrin			0.1
Aldrin			0.1
Chlordane			1
Endosulfan I			0.1
Endosulfan II			0.1
Chlorobenzilate			300
HERBICIDES, ENHANCED ADD			
2,4,5-T	G, None	SW-846, #8150	2
Cyanide	P, NaOH to pH>12	SW-846, #9010	10
Perchlorate	P, None	70-IC[e,f]	1000
PHOSPHOROUS PESTICIDES			
Carbophenothion			2
Tetraethylpyrophosphate			2
Disulfoton	G, None	SW-846, #8140	2
Dimethoate			2
Methyl parathion			2
Parathion			2
Strontium-90	P, HNO3 to pH<2	UST,20-Sr-02[j]	5 pCi/l
Gamma Scan	P, HNO3 to pH<2	UST,30-GS & 40-07[j]	20 pCi/l (Cs)

93127602047

TABLE 2. (cont'd)

Constituent	Collection & Preservation[a,b]	Method[c]	Detection Limit, ppb[d]
Citrus red #2	G, None	AOAC #34.015B	1000
DIRECT AQUEOUS INJECTION, ENHANCED ADDS[i]			
Paraldehyde			2000
Cyanogen bromide			3000
Cyanogen chloride			3000
Acrylamide			10000
Allyl alcohol			2500
Chloral			3000
Chloroacetaldehyde			16000
3-Chloropropionitrile			4000
Cyanogen			3000
Dichloropropanol			3000
Ethyl carbamate	G, None	SW-846 #8240 DAI(9)	5000
Ethyl cyanide			2000
Ethylene oxide			3000
Fluoroacetic acid			3000
Glycidylaldehyde			3000
Isobutyl alcohol			1000
Methyl hydrazine			3000
n-propylamine			10000
2-propyn-1-ol			8000
1,1-Dimethyl hydrazine			3000
1,2-Dimethyl hydrazine			3000
Acetonitrile			3000
Hydrazine			3000
Hydrazine,LDL (optional)	G,None	ASTM D1385	30
VOA's, ENHANCED ADDS			
Tetrachloromethane			5
Methylethyl ketone			10
1,1,1-Trichloroethane			5
1,1,2-Trichloroethane			5
1,1,2-Trichloroethene	G, None	SW-846, #8240	5
Tetrachloroethene	No Headspace		5
Xylene (o,p)			5
Methylene chloride			10
Chloroform			5
Hexone			10
Additional volatiles[i]			10

TABLE 2. (cont'd)

Constituent	Collection & Preservation[a,b]	Method[c]	Detection Limit, ppb[d]
A/B/N, ENHANCED ADDS			
Hexachlorophene			10
Naphthalene			10
Kerosene			10000
Hexachlorobenzene			10
Pentachlorobenzene			10
1,2-Dichlorobenzene			10
1,3-Dichlorobenzene	G, None	SW-846, #8270	10
1,4-Dichlorobenzene			10
1,2,3-Trichlorobenzene			10
1,2,4-Trichlorobenzene			10
1,3,5-Trichlorobenzene			10
1,2,3,4-Tetrachlorobenzene			10
1,2,3,5-Tetrachlorobenzene			10
1,2,4,5-Tetrachlorobenzene			10
Additional semi-volatiles			10

(a) P = Plastic, G = Glass.
(b) All samples will be cooled to 4 C upon collection.
(c) Constituents grouped together are analyzed by the same method.
(d) Detection limit units except where indicated.
(e) In-house analytical method from UST Procedure Manual, UST-RD-PM-9-80 (UST 1986); based on EPA-600H-84-017,March 1984.
(f) IC = Ion Chromatography.
(g) DAI = Direct Aqueous Injection.
(h) The parameters and constituents in this table, together with Table 1, comprise the "long list"
(i) See Attachment 4 for additional constituents.
(j) A Handbook of Radioactivity Measurements and Procedures, NCRP Report 58, Washington, D.C.

ATTACHMENT 4
(5 pages)

Additional Analytical Substances for Enhanced
9905 Analyses and Direct Aqueous Injection

SUBSTANCE	MDC		SAMPLE SIZE	
	WATER	SOIL	WATER	SOIL
ADDITIONAL 9905 VOAs				
acrolein	10 ppb	0.01 ug/g		
acetonitrile	10 ppb	0.01 ug/g		
acrylonitrile	10 ppb	0.01 ug/g		
bis(chloromethyl) ether	5 ppb	0.005 ug/g		
bromoacetone	5 ppb	0.005 ug/g		
methyl bromide	10 ppb	0.01 ug/g		
carbon disulfide	10 ppb	0.01 ug/g		
chlorobenzene	5 ppb	0.005 ug/g		
2-chloroethyl vinyl ether	5 ppb	0.005 ug/g		
chloroform	5 ppb	0.005 ug/g		
methyl chloride	10 ppb	0.01 ug/g		
chloromethyl methyl ether	10 ppb	0.01 ug/g		
crotonaldehyde	10 ppb	0.01 ug/g		
1,1-dibromo-3-chloropropane	10 ppb	0.01 ug/g		
1,2-dibromoethane	10 ppb	0.01 ug/g		
dibromomethane	10 ppb	0.01 ug/g		
1,4-dichloro-2-butene	10 ppb	0.01 ug/g		
dichlorodiflouromethane	10 ppb	0.01 ug/g		
1,1-dichloroethane	5 ppb	0.005 ug/g	40 ml	10 g
1,2-dichloroethane	5 ppb	0.005 ug/g		
trans-1,2-dichloroethene	5 ppb	0.005 ug/g		
1,1-dichloroethylene	5 ppb	0.005 ug/g		
methylene chloride	5 ppb	0.005 ug/g		
1,2-dichloropropane	5 ppb	0.005 ug/g		
1,3-dichloropropene	5 ppb	0.005 ug/g		
N,N-diethylhydrazine	10 ppb	0.01 ug/g		
1,1-dimethylhydrazine	10 ppb	0.01 ug/g		
1,2-dimethylhydrazine	10 ppb	0.01 ug/g		
ethyl methacrylate	10 ppb	0.01 ug/g		
ehtylene oxide	10 ppb	0.01 ug/g		
hydrogen sulfide	10 ppb	0.01 ug/g		
iodomethane	10 ppb	0.01 ug/g		
methacrylonitrile	10 ppb	0.01 ug/g		
methanethiol	10 ppb	0.01 ug/g		
pentachloroethane	10 ppb	0.01 ug/g		
1,1,1,2-tetrachlorethane	10 ppb	0.01 ug/g		
1,1,2,2-tetrachlorethane	5 ppb	0.005 ug/g		
tetrachlorethylene	10 ppb	0.01 ug/g		
bromoform	5 ppb	0.005 ug/g		
trichloromethanethiol	10 ppb	0.01 ug/g		
trichloromonoflouromethane	10 ppb	0.01 ug/g		
trichloropropane	10 ppb	0.01 ug/g		
1, 2, 3-trichloropropane	10 ppb	0.01 ug/g		
vinyl chloride	10 ppb	0.01 ug/g		

93127602050

Additional Analytical Substances for Enhanced
9905 Analyses and Direct Aqueous Injection (contd)

SUBSTANCE

ADDITIONAL 9905 ABNs

acetophenone
warfarin
2-acetylaminofluorene
4-aminobyphenyl
5-(aminomethyl)-3-isoxazolol
amitrole
aniline
aramite
auramine
benz[c]acridine
bena[a]anthracene
benzene, dichloromethyl
benezenethoil
benzidine
benzo[b]fluoranthene
benzo[j]fluoranthene
p benzoquinone
benzyl chloride
bis(2-chloroethoxy) methane
bis(2-chloroethyl) ether
bis 2-ethylhexyl) phthalate
4-bromophenyl phenyl ether
butyl benzyl phthalate
2-sec-butyl-4,6-dinitrophenol
chloroalkyl ethers
p-chloroaniline
p-chloro-m-cresol
1-chloro-2,3-epoxypropane
2-chloronaphthalene
2-chlorophenol
chrysene
cresols
2-cyclohexyl-4,6-dinitrophenol
dibenz[a,h]acridine
dibenz[a,j]acridine
dibenz[a,h]anthracene
7H-dibenzo[c,g]carbazole
dibenzo[a,e]pyrene
dibenzo[a,h]pyrene
dibenzo[a,i]pyrene
di-n-butyl phthalate
1,2-dichlorobenzene
1,3-dichlorobenzene
1,4-dichlorobenzene

Additional Analytical Substances for Enhanced
9905 Analyses and Direct Aqueous Injection (contd)

SUBSTANCE

ADDITIONAL 9905 ABNs

2,4-dichlorophenol
2,6-dichlorophenol
diethyl phthalate
dihydrosafrole
3,3'-dimethoxybenzidine
p-dimethylaminoazobenzene
7,12-dimethylbenz[a]anthracene
3,3'-dimethylbenzidine
thiofanox
alpha, alpha-dimethylphenethylamine
dimethyl phthalate
dinitrobenzene
4,6-dinitro-o-cresol and salts
2,4-dinitrotoluene
2,6-dinitrotoluene
di-n-octyl phthalate
diphenylamine
1,2-diphenylhydrazine
di-n-propylnitrosamine
ethyleneimine
ethyl methanesulfonate
fluoranthene
hexachlorobenzene
hexachlorobutadiene
hexachlorocyclopentadiene
hexachloroethane
indeno(1,2,3-cd)pyrene
isosafrole
malononitrile
melphalan
methapyrilene
metholonyl
2-methylaziridine
3-methylcholanthrene
4,4'-methylenebis(2-chloroaniline)
2-methyllaconitrile
methyl methacrylate
methyl methanesulfonate
2-methol-2-(methylthio) propionaldehyde-o-
(methylcarbonyl)oxime
methylthiouracil

Additional Analytical Substances for Enhanced
9905 Analyses and Direct Aqueous Injection (contd)

SUBSTANCE
ADDITIONAL 9905 ABNs
1,4-naphthoquinone
1-naphthylamine
2-naphthylamine
nitrobenzine
N-nitrosodi-n-butylamine
N-nitrosodiethanolamine
N-nitrosodiethylamine
N-nitrosodimethylamine
N-nitrosomethylethylamine
N-nitroso-N-methylurethane
N-nitrosomethylvinylamine
N-nitrosomorpholine
N-nitrosonornicotine
N-nitrosopiperidine
nitrosopyrrolidine
5-nitro-o-toluidine
pentachlorobenzene
pentachloronitrobenzene
phentacetin
phenylenediamine
phthalic acid esters
2-picoline
pronamide
reserpine
resorcinol
safrol
1,2,4,5-tetrachlorobenzene
2,3,7,8-TCDD
2,3,4,6-tetrachlorophenol
thiuram
toluenediamine
o-toluidine hydrochloride
1,2,4-trichlorobenzene
2,4,6-trichlorophenol
0,0,0-triethyl phosphorothioate
sym-trinitrobenzene
tris(2,3-dibromopropyl) phosphate
benzo[a]pyrene
chlornaphazine
bis(2-chloroisopropyl)ether

Additional Analytical Substances for Enhanced
9905 Analyses and Direct Aqueous Injection (contd)

SUBSTANCE	MDC		SAMPLE SIZE	
	WATER	SOIL	WATER	SOIL
DIRECT ACQUEOUS INJECTION				
acrylamide	10 ppm			
allyl ahcolol	2.5 ppm			
chloroacetaldehyde	16 ppm			
3-chloropropionitrile	4 ppm		40 ml	50 g
ethyl carbamate	5 ppm			
ethyl cyanide	2 ppm			
isobutyl alcohol	1 ppm			
paraldehyde	2 ppm			
n-propylamine	10 ppm			
2-propyn-1-ol	8 ppm			

183-H Basins

Analytical data obtained for the ground water near the 183-H Basins have indicated the presence of metals, anions, radionuclides, and a volatile organic chemical. The metals that have been detected include chromium, sodium, iron, potassium, barium, copper, manganese, nickel, vanadium, calcium, and aluminum. Of the metals which have a Primary Drinking Water Standard, only chromium has consistently exceeded the standard, with concentrations in wells 199-H4-5, 100-H4-3, and 199-H4-4 being on the order of about 500 ppb, 1000 ppb, and 600 ppb, respectively.

Anions including chloride, nitrate, and sulfate have consistently been detected. Nitrate has exceeded the Primary Drinking Water Standard in wells 199-H4-3, 199-H4-4, and 199-H3-1, with concentrations being generally about 400,000 to 1,000,000 ppb in wells H4-3 and H4-4, and about 65,000 ppb in well H3-1. A cation (ammonium) has also been detected.

The volatile organic chemical that has been detected is chloroform, with the detected concentrations being on the order of about 20 to 30 ppb. At present, there is no standard for this chemical.

The analyses for gross alpha and gross beta have indicated the presence of radionuclides. Gross alpha has exceeded the 15 pCi/ℓ level expressed in the Drinking Water Standard, and the gross beta results have in some cases been above the 50 pCi/ℓ screening level at which more investigation is needed before calculating dose.

As mentioned previously, our data base for these constituents is still very limited. We will provide you with more results as they become available.

HAZARDOUS WASTE CONSTITUENTS - GROUNDWATER MONITORING

Code	Code Name	Constituent
A01	berylam	berylliam
A02	osmium	osmium
A03	stronum	strontium
A04	zinc	zinc
A05	calcium	calcium
A06	barium	barium
A07	cadmium	cadmium
A08	chromum	chromium
A10	silver	silver
A11	sodium	sodium
A12	nickel	nickel
A13	copper	copper
A14	vanadum	vanadium
A15	antiony	antimony
A16	alumnum	aluminum
A17	mangese	manganese
A18	potasum	potassium
A19	iron	iron
A20	arsenic	arsenic
A21	mercury	mercury
A22	selenum	selenium
A23	thalium	thallium
A24	thioura	thiourea
A25	acetrea	1-acetyl-2-thiourea
A26	chlorea	1-(o-chlorophenyl) thiourea
A27	dietrol	diethylstilbesterol
A28	ethyrea	ethylenethiourea
A29	naphrea	1-naphthyl-2-thiourea
A30	nitrrea	N-nitroso-N-ethylurea
A31	nitrmet	N-nitroso-N-methylurea
A32	phenrea	N-phenylthiourea
A33	endrin	endrin
A34	methlor	methoxychlor
A35	toxaene	toxaphene
A36	a-BHC	alpha-BHC
A37	b-BHC	beta-BHC
A38	g-BHC	gamma-BHC
A39	d-BHC	delta-BHC
A40	DDD	DDD
A41	DDE	DDE
A42	DDT	DDT
A43	heptlor	heptachlor
A44	heptide	heptchlor epoxide
A45	kepone	kepone
A46	dielrin	dieldrin
A47	aldrin	aldrin
A48	chloane	chlordane
A49	~~endofan~~ endo1	endosulfan I
A50	magnes	magnesium
A52	endo2	endosulfan II

A51	leadgf	lead (graphite furnace)
A54	Ar1016	Arochlor 1016
A55	Ar1221	Arochlor 1221
A56	Ar1232	Arochlor 1232
A57	Ar1242	Arochlor 1242
A58	Ar1248	Arochlor 1248
A59	Ar1254	Arochlor 1254
A60	Ar1260	Arochlor 1260
A61	tetrane	tetrachloromethane
A62	benzene	benzene
A63	dioxane	dioxane
A64	methone	methyl ethyl ketone
A65	pyridin	pyridine
A66	toluene	toluene
A67	1,1,1-t	1,1,1-trichloroethane
A68	1,1,2-t	1,1,2-trichloroethane
A69	tricene	trichloroethylene
A70	percene	perchloroethylene
A71	opxyle	xylene-o,p
A72	acrolin	acrolein
A73	acryile	acrylonitrile
A74	bisther	bis(chloromethyl) ether
A75	bromone	bromoacetone
A76	methbro	methyl bromide
A77	carbide	carbon disulfide
A78	chlbenz	chlorobenzene
A79	chlther	2-chloroethyl vinyl ether
A80	chlform	chloroform
A81	methchl	methyl chloride
A82	chmther	chloromethyl methyl ether
A83	crotona	crotonaldehyde
A84	dibrchl	1,2-dibromo-3-chloropropane
A85	dibreth	1,2-dibromoethane
A86	dibrmet	dibromomethane
A87	dibuten	1,4-dichloro-2-butene
A88	dicdifm	dichlorodifluoromethane
A89	1,1-dic	1,1-dichloroethane
A90	1,2-dic	1,2-dichloroethane
A91	trandce	trans-1,2-dichloroethene
A92	dicethy	1,1-dichloroethylene
A93	methych	methylene chloride
A94	dicpane	1,2-dichloropropane
A95	dicpene	1,3-dichloropropene
A96	NNdiehy	N,N-diethylhydrazine
A97	1,1-dim	1,1-dimethylhydrazine
A98	1,2-dim	1,2-dimethylhydrazine
A99	hydrsul	hydrogen sulfide
B01	iodomet	iodomethane
B02	methacr	methacrylonitrile
B03	meththi	methanethiol
B04	pentach	pentachloroethane
B05	1112-tc	1,1,1,2-tetrachlorethane
B06	1122-tc	1,1,2,2-tetrachlorethane

B08	bromorm	bromoform
B09	trcmeol	trichloromethanethiol
B10	trcmflm	trichloromonofluoromethane
B11	trcpane	trichloropropane
B12	123-trp	1,2,3-trichloropropane
B13	vinyide	vinyl chloride
B14	m-xyle	xylene-m
B15	diethy	diethylarsine
B19	acetile	acetonitrile
B20	acetone	acetophenone
B21	warfrin	warfarin
B22	acefene	2-acetylaminofluorene
B23	aminoyl	4-aminobyphenyl
B24	amiisox	5-(aminomethyl)-3-isoxazolol
B25	amitrol	amitrole
B26	aniline	aniline
B27	aramite	aramite
B28	auramin	auramine
B29	benzcac	benz[c]acridine
B30	benzaan	benz[a]anthracene
B31	bendicm	benzene, dichloromethyl
B32	benthol	benzenethoil
B33	bendine	benzidine
B34	benzbfl	benzo[b]fluoranthene
B35	benzjfl	benzo[j]fluoranthene
B36	pbenzqu	p benzoquinone
B37	benzchl	benzyl chloride
B38	bis2chm	bis(2-chloroethoxy) methane
B39	bis2che	bis(2-chloroethyl) ether
B40	bis2eph	bis(2-ethylhexyl) phthalate
B41	brophen	4-bromophenyl phenyl ether
B42	butbenp	butyl benzyl phthalate
B43	butdinp	2-sec-butyl-4,6-dinitrophenol
B44	chaleth	chloroalkyl ethers
B45	chlanil	p-chloroaniline
B46	chlcres	p-chloro-m-cresol
B47	chlepox	1-chloro-2,3-epoxypropane
B48	chlnaph	2-chloronaphthalene
B49	chlphen	2-chlorophenol
B50	chrysen	chrysene
B51	cresols	cresols
B52	cychdin	2-cyclohexyl-4,6-dinitrophenol
B53	dibahac	dibenz[a,h]acridine
B54	dibajac	dibenz[a,j]acridine
B55	dibahan	dibenz[a,h]anthracene
B56	dibcgca	7H-dibenzo[c,g]carbazole
B57	dibaepy	dibenzo[a,e]pyrene
B58	dibahpy	dibenzo[a,h]pyrene
B59	dibaipy	dibenzo[a,i]pyrene
B60	dibphth	di-n-butyl phthalate
B61	12-dben	1,2-dichlorobenzene
B62	13-dben	1,3-dichlorobenzene
B63	14-dben	1,4-dichlorobenzene
B64	dichben	3,3'-dichlorobenzidine

B65	24-dchp	2,4-dichlorophenol
B66	26-dchp	2,6-dichlorophenol
B67	diephth	diethyl phthalate
B68	dihysaf	dihydrosafrole
B69	dimethb	3,3'-dimethoxybenzidine
B70	dimeamb	p-dimethylaminoazobenzene
B71	dimbenz	7,12-dimethylbenz[a]anthracene
B72	dimeylb	3,3'-dimethylbenzidine
B72	thionox	thiofanox
B74	dimpham	alpha,alpha-dimethylphenethylamine
B75	dimphen	2,4-dimethylphenol
B76	dimphth	dimethyl phthalate
B77	dinbenz	dinitrobenzene
B78	dincres	4,6-dinitro-o-cresol and salts
B79	dinphen	2,4-dinitrophenol
B80	24-dint	2,4-dinitrotoluene
B81	26-dint	2,6-dinitrotoluene
B82	diophth	di-n-octyl phthalate
B83	diphami	diphenylamine
B84	diphhyd	1,2-diphenylhydrazine
B85	diprnit	di-n-propylnitrosamine
B86	ethmine	ethyleneimine
B87	ethmeth	ethyl methanesulfonate
B88	fluoran	fluoranthene
B89	hexcben	hexachlorobenzene
B90	hexcbut	hexachlorobutadiene
B91	hexccyc	hexachlorocyclopentadiene
B92	hexceth	hexachloroethane
B93	indenop	indeno(1,2,3-cd)pyrene
B94	isosole	isosafrole
B95	maloile	malononitrile
B96	melphal	melphalan
B97	methapy	methapyrilene
B98	methnyl	metholonyl
B99	metazir	2-methylaziridine
C01	metchan	3-methylcholanthrene
C02	metbisc	4,4'-methylenebis(2-chloroaniline)
C03	metacto	2-methyllactonitrile
C04	metacry	methyl methacrylate
C05	metmsul	methyl methanesulfonate
C06	metprop	2-methyl-2-(methylthio) propionaldehyde-o-(methylcarbonyl)oxime
C07	methiou	methylthiouracil
C08	naphqui	1,4-naphthoquinone
C09	1-napha	1-naphthylamine
C10	2-napha	2-naphthylamine
C11	nitrani	p-nitroaniline
C12	nitbenz	nitrobenzine
C13	nitphen	4-nitrophenol
C14	nnibuty	N-nitrosodi-n-butylamine
C15	nnidiea	N-nitrosodiethanolamine
C16	nnidiey	N-nitrosodiethylamine
C17	nnidime	N-nitrosodimethylamine
C18	nnimeth	N-nitrosomethylethylamine

C19	nniuret	N-nitroso-N-methylurethane
C20	nniviny	N-nitrosomethylvinylamine
C21	nnimorp	N-nitrosomorpholine
C22	nninico	N-nitrosonornicotine
C23	nnipipe	N-nitrosopiperidine
C24	nitrpyr	nitrosopyrrolidine
C25	nitrtol	5-nitro-o-toluidine
C26	pentchb	pentachlorobenzene
C27	pentchn	pentachloronitrobenzene
C28	pentchp	pentachlorophenol
C29	phentin	phenacetin
C30	phenine	phenylenediamine
C31	phthest	phthalic acid esters
C32	picolin	2-picoline
C33	pronide	pronamide
C34	reserpi	reserpine
C35	resorci	resorcinol
C36	safrol	safrol
C37	tetrchb	1,2,4,5-tetrachlorobenzene
C38	tetrchp	2,3,4,6-tetrachlorophenol
C40	thiuram	thiuram
C41	toludia	toluenediamine
C42	otolhyd	o-toluidine hydrochloride
C43	trichlb	1,2,4-trichlorobenzene
C44	245-trp	2,4,5-trichlorophenol
C45	246-trp	2,4,6-trichlorophenol
C46	triphos	0,0,0-triethyl phosphorothioate
C47	symtrin	sym-trinitrobenzene
C48	triphos	tris(2,3-dibromopropyl) phosphate
C49	benzopy	benzo[a]pyrene
C50	chlnaph	chlornaphazine
C51	bis2eth	bis(2-chloroisopropyl)ether
C52	hexaene	hexachloropropene
C53	hydrazi	hydrazine
C54	hexachl	hexachlorophene
C55	naphtha	naphthalene
C56	123tri	1,2,3-trichlorobenzene
C57	phenol	phenol
C58	135tri	1,3,5-trichlorobenzene
C59	1234te	1,2,3,4-tetrachlorobenzene
C60	1235te	1,2,3,5-tetrachlorobenzene
C61	tetepyr	tetraethylpyrophosphate
C62	chllate	chlorobenzilate
C63	carbpht	carbophenothion
C64	disulfo	disulfoton
C65	dimetho	dimethoate
C66	methpar	methyl parathion
C67	parathi	parathion
C68	TOX	total organic halogen
C69	TOC	total organic carbon
C70	cyanide	cyanide
C71	formaln	formalin
C72	nitrate	nitrate

C73	sulfate	sulfate
C74	fluorid	fluoride
C75	chlorid	chloride
C76	phospha	phosphate
C77	perchlo	perchlorate
C78	sulfide	sulfide
C79	kerosen	kerosene
C80	ammoniu	ammonium ion
C81	ethygly	ethylene glycol
109	colifrm	coliform bacteria
181	radium	radium
112	alpha	gross alpha
111	beta	gross beta
C86	dioxin	dioxin
C87	citrusr	citrus red #2
C88	cyanbro	cyanogen bromide
C89	cyanchl	cyanogen chloride
C90	paralde	paraldehyde
C91	strychn	strychnine
C92	malhydr	maleic hydrizide
C93	nicotin	nicotinic acid
C94	acryide	acrylamide
C95	allylal	allyl alcohol
C96	chloral	chloral
C97	chlacet	chloroacetaldehyde
C98	chlprop	3-chloropropionitrile
C99	cyanogn	cyanogen
H01	dicprop	dichloropropanol
H03	ethcarb	ethyl carbamate
H04	ethcyan	ethyl cyanide
H05	ethoxid	ethylene oxide
H06	ethmeth	ethyl methacrylate
H07	fluoroa	fluoroacetic acid
H08	glycidy	glycidylaldehyde
H09	isobuty	isobutyl alcohol
H10	metzine	methyl hydrazine
H11	propyla	n-propylamine
H12	propyno	2-propyn-1-ol
H13	2,4-D	2,4-D
H14	2,4,5TP	2,4,5-TP silvex
H15	2,4,5-T	2,4,5-T
H16	bicarb	bicarbonate
H17	TDS	total dissolved solids

ADDITIONAL COMPOUND LIST

I01	ACETONE	ACETONE
I02	HEXANE	HEXANE
I03	METHYLCYCLOPENTANE	MECYPEN
I04	1,2 BENZENE DICARBOXYLIC ACID, BUTYL, 2 METHYLPROPYLESTER	MEBUPHT
I05	NITROMETHANE	NITROM
I06	ISOPHERONE	ISOPHER
I07	BUTANAL	BUTANAL
I08	3-BUTEN-2-ONE	BUTENON
I09	1-BUTANOL	BUTANOL
I10	2-PROPANOL	PROPANOL
I11	1-H INDENE OCTAHYDRO	INDOCHY
I12	ETHYLMETHYL CYCLOHEXANE	CYCETME
I13	CYCLOHEXANE ISOMER	CYCISO1
I14	CYCLOHEXANE ISOMER	CYCISO2
I15	5-METHYL-4 NONENE	NONEME
I16	TRIMETHYL HEPTATRIENE	TMEHEPT
I17	1,2-OCTADIENE	OCTADIE
I18	N-METHOXYMETHANAMINE	MEOXAMI
I19	METHYLFORMATE	MEFORMT
I20	METHYLNITRATE	MENITRA
I21	TRIBUTYLPHOSPHORIC ACID	TRIBUPH
I22	HEXANOIC ACID	HEXACID
I23	2-BUTOXY ETHANOL	BUTOXET
I24	BENZALDEHYDE	BENZALD
I25	2-(2 BUTOXYETHOXY) ETHANOL	BUTOX2

RECEIVED
MAR 11 1988
J.M.V. CARLILE

I26	1,4 BUTANEDIOL, DINITRATE	14BDDN
I27	3,4-DICHLOROBENZOIC ACID	34DCBA
I28	TETRAHYDORFURAN	TAF
I29	ACENAPHTHENE	ACENAPH
I30	FLUORENE	FLRENE
I31	ANTHRACENE	ANTHRA
I32	PYRENE	PYRENE
I33	ETHYLBENZENE	ETHBENZ
I34	STYRENE	STYRENE
I35	1,1,3-TRIMETHYLCYCLOHEXANE	TMCYCH
I37	3-ETHYLHEXANE	3ETHHEX
I38	1,3,5,7-CYCLOOCTATETRAENE	CYCTETR
I39	TRANS-1-ETHYL-4METHYL CYCLOHEXANE	ETMTCYC
I40	1,3 DIMETHYLBENZENE (M-XYLENE)	13DMBEN
I41	(1-METHYLETHYL)-BENZENE	MEBENZ
I42	BROMODICHLOROMETHANE	BDCM
I43	CHLORODIBROMOMETHANE	CDBM
I44	PROPYL BENZENE	PROBENZ
I45	1,4-DIMETHYL CYCLOOCTANE	14DMCYO
I46	CYCLO HEXANE	CYCLHEX
I47	METHYL CYCLOHEXANE	MECYCHE
I48	1-ETHYL-4-METHYL BENZENE	ETMTBEN
I49	3-METHYL HEPTANE	MEHEPT
I50	DECAHYDRONAPHTHALENE	DECANAP
I51	2-METHYL OCTANE	MEOCTA
I52	TRIMETHYL SILANOL	TMSILO
I53	DICHLOROFLUOROMETHANE	DCFM

I54	PENTENAL	PENTAL
I55	1-(1-PROPYNYL)-CYCLOHEXENE	PROCYEN
I56	2,3-DIMETHYL-2-HEXENE	DIMEHEX
I57	ETHENYL CYCLOPENTANE	ETHECYC
I58	1,3-DIMETHYLBUTYL CYCLOHEXANE	DMBCYCL
I59	2-METHYL BUTANE	METBUTA
I60	PENTANE	PENTANE
I61	2-PENTENE	2PENTEN
I62	2-METHYL HEXANE	2MEHEX
I63	2,6-BIS(1,1-DIMETHYLETHYL)-4-METHYL PHENOL	BHT
I64	2-NITROPHENOL	2NITPH
I65	2,4-DICHLORO-6-METHYLPHENOL	246DCMP
I66	2,4-DICHLORO-5-METHYLPHENOL	245DCMP
I99	UNKNOWN	

GROUND-WATER MONITORING DATA FOR THE RCRA COMPLIANCE MONITORING PROJECT

Attached are data tables for the ground-water monitoring project involving the 300 Area Process Trenches and the 183-H Solar Evaporation Basins. Tables for sampling conducted from June through October are enclosed; we are currently working on the tables for subsequent months (through February) and will send them as soon as they are completed and checked. These data tables have been designed to summarize the results above the detection limit; blank spaces represent values that are less than the limit. Similarly, constituents that were below detection in all wells in the network for a facility do not appear on the tables. Abbreviated codes have been used for the constituents, and we have enclosed a list of constituent codes so that the full names can be looked up if needed. Note that many of these constituents never appear on the tables; this list is comprehensive, and a large number of these constituents may relate to sampling of effluent streams rather than environmental media.

Results to date for the two facilities are described below.

300 Area Process Trenches

Analytical data collected to date for the ground water near the process trenches have indicated the presence of some metals, volatile organic chemicals, anions, radionuclides, and coliform bacteria. The metals that are most often detected include barium, sodium, potassium, vanadium, and iron. On a much less frequent basis, other metals, including the following, have been detected: chromium, copper, zinc, arsenic, calcium, cadmium, manganese, and nickel. Most of the metals are in fairly low concentrations (some very close to the detection limit), and, of those which have a Primary Drinking Water Standard, none have consistently exceeded it.

The volatile organics that have been detected include chloroform and perchloroethylene, in concentrations generally around 20 ppb and 15 ppb, respectively. Standards for these chemicals do not presently exist.

Anions including chloride, fluoride, nitrate and sulfate have been frequently detected but (for those which have standards) the concentrations have not been excessive of the standard. A cation (ammonium) has also been detected.

The presence of radionuclides is indicated by the results of the gross alpha and gross beta analyses. On occasion, the gross alpha results have been above the 15 pCi/ℓ level quoted in the Primary Drinking Water Standards. The gross beta results have generally been low, beneath the 50 pCi/ℓ level at which more investigation is needed before calculating dose.

Coliform bacteria have also been detected in a few wells.

As you know, we are still in the process of collecting baseline data and defining the normal seasonal variability of the results. We will provide you with more definitive information at this work progresses.

9312760206 5

MONTHLY SUMMARY OF RESULTS ABOVE DETECTION LIMIT FOR JUN 1985
INPUT FILE:UNC_U1WELLS

UP GRADIENT WELLS

CONSTITUENT NAME	UNITS	DETECTION LIMIT	WATER STANDARD	1-H3-1(0)	1-H4-6
BETA	PCI/L	8.00E+00	5.00E+01	1.48E+01	
				8.40E+00	NR
				8.42E+00	NR
CONDUCT	UMHO			5.47E+02@	2.97E+02@
PH				7.40E+00@	7.00E+00@
STRONUM	PPB	3.00E+02		4.04E+02	NR
				3.56E+02	NR
				3.82E+02	NR
ZINC	PPB	5.00E+00		1.80E+01	NR
				8.00E+00	NR
				6.00E+00	NR
CALCIUM	PPB	5.00E+01		6.78E+04	NR
				7.21E+04	NR
BARIUM	PPB	6.00E+00	1.00E+03	5.00E+01	1.50E+01
				4.40E+01	NR
				6.60E+01	NR
CADMIUM	PPB	2.00E+00	1.00E+01		1.30E+01*
CHROMUM	PPB	1.00E+01	5.00E+01	3.00E+01	2.60E+01
				2.30E+01	NR
				2.40E+01	NR
SODIUM	PPB	1.00E+02		1.99E+04	1.82E+04
				1.57E+04	NR
				1.51E+04	NR
COPPER	PPB	1.00E+01	(1.30E+03)	1.00E+01	1.20E+01
VANADUM	PPB	5.00E+00		4.10E+01	1.80E+01
				2.80E+01	NR
				2.90E+01	NR
ALUMNUM	PPB	1.50E+02		9.26E+02	3.32E+02
				2.23E+02	NR
				2.20E+02	NR
MANGESE	PPB	5.00E+00		3.40E+01	4.00E+01
				2.40E+01	NR
POTASUM	PPB	1.00E+02		7.22E+03	5.39E+03
				5.40E+03	NR
				5.31E+03	NR
IRON	PPB	5.00E+01		5.84E+02	5.47E+02
				1.32E+02	NR
				1.84E+02	NR
ARSENIC	PPB	5.00E+00	5.00E+01	6.00E+00	
THALIUM	PPB	1.00E+01		1.80E+01	NR
				1.40E+01	NR
				1.20E+01	NR
CHLFORM	PPB	1.00E+01		1.00E+01	
				1.10E+01	

DRAFT
- will formal transmittal -

* - VALUE EXCEEDS PRIMARY DRINKING WATER STANDARD.
\# - VALUE EXCEEDS PROPOSED PRIMARY DRINKING WATER STANDARD.
% - VALUE EXCEEDS SCREENING LEVEL FOR FURTHER INVESTIGATION.
@ - DETECTION LIMIT WAS NOT AVAILABLE FOR COMPARISON
NR - ANALYSIS NOT REQUESTED
(0)- WELL SAMPLED IN TRIPLICATE; ONLY VALUES >DETECTION LIMIT ARE SHOWN
WATER S ARD(S) IN PARENTHESES ARE PROPOSED ONLY

MONTHLY SUMMARY OF RESULTS ABOVE DETECTION LIMIT FOR JUN 1985
INPUT FILE:UNC_U.WELLS

UP GRADIENT WELLS

CONSTITUENT NAME	UNITS	DETECTION LIMIT	WATER STANDARD	1-H3-1(0)	1-H4-6
TOC	PPB	1.00E+03		1.56E+03	NR
				1.07E+03	NR
NITRATE	PPB	5.00E+02	4.50E+04	6.00E+04*	1.50E+04
				5.80E+04*	NR
SULFATE	PPB	5.00E+02		5.95E+04	4.00E+04
				5.90E+04	NR
CHLORID	PPB	5.00E+02		6.20E+03	4.00E+03
				5.80E+03	NR
AMMONIU	PPB	5.00E+01		1.70E+02	1.70E+02
				1.75E+02	NR
				1.60E+02	NR

DRAFT

* - VALUE EXCEEDS PRIMARY DRINKING WATER STANDARD.
\# - VALUE EXCEEDS PROPOSED PRIMARY DRINKING WATER STANDARD.
% - VALUE EXCEEDS SCREENING LEVEL FOR FURTHER INVESTIGATION.
@ - DETECTION LIMIT WAS NOT AVAILABLE FOR COMPARISON
NR - ANALYSIS NOT REQUESTED
(0)- WELL SAMPLED IN TRIPLICATE; ONLY VALUES >DETECTION LIMIT ARE SHOWN
WATER STANDARD(S) IN PARENTHESES ARE PROPOSED ONLY

MONTHLY SUMMARY OF RESULTS ABOVE DETECTION LIMIT FOR JUN 1985
INPUT FILE:UNC_D.WELLS

DOWN GRADIENT WELLS

CONSTITUENT NAME	UNITS	DETECTION LIMIT	WATER STANDARD	1-H4-3	1-H4-4	1-H4-5(+)
BETA	PCI/L	8.00E+00	5.00E+01	7.83E+02%	2.94E+02%	
CONDUCT	UMHO			2.61E+03@	1.07E+03@	3.02E+02@
PH				7.30E+00@	7.20E+00@	7.40E+00@
LOALPHA	PCI/L	4.00E+00	1.50E+01	1.19E+02%	4.09E+01%	
STRONUM	PPB	3.00E+02		4.58E+02	NR	NR
ZINC	PPB	5.00E+00		1.20E+01	NR	NR
CALCIUM	PPB	5.00E+01		8.54E+04	NR	NR
BARIUM	PPB	6.00E+00	1.00E+03	1.43E+02	9.40E+01	5.00E+01
				NR	NR	4.20E+01
				NR	NR	6.00E+01
				NR	NR	3.60E+01
CADMIUM	PPB	2.00E+00	1.00E+01	5.00E+00		
CHROMUM	PPB	1.00E+01	5.00E+01	1.13E+03*	6.46E+02*	1.92E+02*
				NR	NR	1.76E+02*
				NR	NR	1.69E+02*
				NR	NR	1.84E+02*
SODIUM	PPB	1.00E+02		3.95E+05	1.48E+05	8.80E+03
				NR	NR	8.88E+03
				NR	NR	9.23E+03
				NR	NR	1.06E+04
NICKEL	PPB	1.00E+01		7.40E+01	1.70E+01	
COPPER	PPB	1.00E+01	(1.30E+03)	8.90E+01	2.90E+01	1.30E+01
				NR	NR	2.70E+01
				NR	NR	2.00E+01
				NR	NR	1.20E+01
VANADUM	PPB	5.00E+00		2.40E+01	1.60E+01	2.80E+01
				NR	NR	3.70E+01
				NR	NR	3.20E+01
				NR	NR	3.20E+01
ALUMNUM	PPB	1.50E+02		7.59E+02	1.97E+02	3.34E+02
				NR	NR	4.39E+02
				NR	NR	3.29E+02
				NR	NR	3.94E+02
MANGESE	PPB	5.00E+00		3.00E+01		1.60E+01
POTASUM	PPB	1.00E+02		9.09E+03	6.04E+03	3.87E+03
				NR	NR	4.15E+03
				NR	NR	4.18E+03
				NR	NR	4.93E+03
IRON	PPB	5.00E+01		8.87E+02	1.11E+03	1.65E+02
				NR	NR	1.46E+03
				NR	NR	1.04E+02
				NR	NR	1.39E+02
ARSENIC	PPB	5.00E+00	5.00E+01	5.00E+00	9.00E+00	6.00E+00
				NR	NR	5.00E+00
				NR	NR	5.00E+00

* - VALUE EXCEEDS PRIMARY DRINKING WATER STANDARD.
@ - VALUE EXCEEDS PROPOSED PRIMARY DRINKING WATER STANDARD.
% - VALUE EXCEEDS SCREENING LEVEL FOR FURTHER INVESTIGATION.
@ - DETECTION LIMIT WAS NOT AVAILABLE FOR COMPARISON
NR - ANALYSIS NOT REQUESTED'
(+)- WELL SAMPLED IN QUADUPLICATE; ONLY VALUES >DETECTION LIMIT ARE SHO
WATER STANDARD(S) IN PARENTHESES ARE PROPOSED ONLY

DRAFT

MONTHLY SUMMARY OF RESULTS ABOVE DETECTION LIMIT FOR JUN 1985
INPUT FILE:UNC_D.WELLS

DOWN GRADIENT WELLS

CONSTITUENT NAME	UNITS	DETECTION LIMIT	WATER STANDARD	1-H4-3	1-H4-4	1-H4-5(+)
THALIUM	PPB	1.00E+01		2.10E+01	NR	NR
LEADGF	PPB	5.00E+00	2.00E+01	5.10E+00		
CHLFORM	PPB	1.00E+01		2.10E+01		
TOC	PPB	1.00E+03		1.56E+03	NR	NR
NITRATE	PPB	5.00E+02	4.50E+04	1.35E+06*	1.30E+06*	1.50E+04
				NR	NR	1.50E+04
				NR	NR	1.58E+04
				NR	NR	1.45E+04
SULFATE	PPB	5.00E+02		1.45E+05	7.00E+04	3.00E+04
				NR	NR	3.10E+04
				NR	NR	2.90E+04
				NR	NR	2.90E+04
FLUORID	PPB	5.00E+02	1.40E+03	1.30E+03	5.00E+02	
CHLORID	PPB	5.00E+02		6.00E+03	4.00E+03	2.70E+03
				NR	NR	2.80E+03
				NR	NR	2.60E+03
				NR	NR	3.00E+03
AMMONIU	PPB	5.00E+01		2.20E+02	1.70E+02	1.80E+02
				NR	NR	1.70E+02
				NR	NR	1.90E+02
				NR	NR	1.80E+02

DRAFT

* - VALUE EXCEEDS PRIMARY DRINKING WATER STANDARD.
\# - VALUE EXCEEDS PROPOSED PRIMARY DRINKING WATER STANDARD.
% - VALUE EXCEEDS SCREENING LEVEL FOR FURTHER INVESTIGATION.
@ - DETECTION LIMIT WAS NOT AVAILABLE FOR COMPARISON
NR - ANALYSIS NOT REQUESTED
(+)- WEL' 'AMPLED IN QUADRUPLICATE; ONLY VALUES >DETECTION LIMIT ARE SH'
WATER S. RD(S) IN PARENTHESES ARE PROPOSED ONLY

MONTHLY SUMMARY OF RESULTS ABOVE DETECTION LIMIT FOR JUN 1985

INPUT FILE:WHC_U.WELLS

UP GRADIENT WELLS

CONSTITUENT NAME	UNITS	DETECTION LIMIT	WATER STANDARD	3-8-2	6-S19-E13
BETA	PCI/L	8.00E+00	5.00E+01	8.27E+00	8.01E+00
CONDUCT	UMHO			3.24E+02@	VM
PH				7.40E+00@	7.90E+00@
ZINC	PPB	5.00E+00		NR	2.30E+01
CALCIUM	PPB	5.00E+01		NR	4.56E+04
BARIUM	PPB	6.00E+00	1.00E+03	4.20E+01	5.00E+01
SODIUM	PPB	1.00E+02		1.73E+04	2.28E+04
COPPER	PPB	1.00E+01	(1.30E+03)		1.80E+01
VANADUM	PPB	5.00E+00		2.30E+01	3.60E+01
ALUMNUM	PPB	1.50E+02		1.54E+02	4.82E+02
POTASUM	PPB	1.00E+02		5.24E+03	7.39E+03
IRON	PPB	5.00E+01		5.57E+02	6.40E+02
RSENIC	PPB	5.00E+00	5.00E+01	7.00E+00	6.00E+00
THALIUM	PPB	1.00E+01		NR	1.00E+01
LEADGF	PPB	5.00E+00	2.00E+01	1.40E+01	
NITRATE	PPB	5.00E+02	4.50E+04	1.60E+04	1.65E+04
SULFATE	PPB	5.00E+02		2.50E+04	4.40E+04
CHLORID	PPB	5.00E+02		8.00E+03	1.26E+04
AMMONIU	PPB	5.00E+01		1.40E+02	1.30E+02

DRAFT

* - VALUE EXCEEDS PRIMARY DRINKING WATER STANDARD.
\# - VALUE EXCEEDS PROPOSED PRIMARY DRINKING WATER STANDARD.
% - VALUE EXCEEDS SCREENING LEVEL FOR FURTHER INVESTIGATION.
@ - DETECTION LIMIT WAS NOT AVAILABLE FOR COMPARISON
NR - ANALYSIS NOT REQUESTED
VM - VAL ISSING DUE TO PROBLEMS IN ANALYSIS OR COLLECTION
WATER STA ARD(S) IN PARENTHESES ARE PROPOSED ONLY

MONTHLY SUMMARY OF RESULTS ABOVE DETECTION LIMIT FOR JUN 1985

INPUT FILE:WHC_D.WELLS

DOWN GRADIENT WELLS

CONSTITUENT NAME	UNITS	DETECTION LIMIT	WATER STANDARD	3-1-1(+)	3-1-2(+)	3-1-3	3-1-4	3-1-5	3-1-6
BETA	PCI/L	8.00E+00	5.00E+01	9.56E+00	9.47E+00	2.89E+01	8.76E+00	1.17E+01	
				9.31E+00	1.17E+01	NR	NR	NR	NR
				8.56E+00	1.12E+01	NR	NR	NR	NR
				1.07E+01		NR	NR	NR	NR
CONDUCT	UMHO			2.05E+02@	2.34E+02@	2.34E+02@	1.77E+02@	2.09E+02@	1.69E+02@
PH				7.00E+00@	6.50E+00@	7.30E+00@	6.73E+00@	6.60E+00@	6.59E+00@
LOALPHA	PCI/L	4.00E+00	1.50E+01	2.26E+01%	1.71E+01%	3.43E+01%	1.12E+01	7.73E+00	1.40E+01
				1.80E+01%	1.67E+01%	NR	NR	NR	NR
				2.22E+01%	1.37E+01	NR	NR	NR	NR
				1.51E+01%	1.49E+01	NR	NR	NR	NR
ZINC	PPB	5.00E+00		NR	NR	NR	NR	8.00E+00	NR
CALCIUM	PPB	5.00E+01		NR	NR	NR	NR	2.14E+04	NR
ARIUM	PPB	6.00E+00	1.00E+03	4.20E+01	3.00E+01		2.00E+01	7.00E+00	3.50E+01
				3.20E+01	7.19E+02	NR	NR	NR	NR
				3.40E+01	4.60E+01	NR	NR	NR	NR
				4.40E+01	1.50E+01	NR	NR	NR	NR
CADMIUM	PPB	2.00E+00	1.00E+01	3.00E+00					
SODIUM	PPB	1.00E+02		1.34E+04	1.33E+04	2.15E+04	7.87E+03	1.44E+04	8.26E+03
				1.34E+04	1.32E+04	NR	NR	NR	NR
				1.30E+04	1.55E+04	NR	NR	NR	NR
				1.36E+04	1.43E+04	NR	NR	NR	NR
COPPER	PPB	1.00E+01	(1.30E+03)	2.00E+01	1.30E+01	2.80E+01	2.30E+01	4.30E+01	2.50E+01
				2.10E+01	1.00E+01	NR	NR	NR	NR
				2.10E+01	1.70E+01	NR	NR	NR	NR
				2.10E+01		NR	NR	NR	NR
VANADUM	PPB	5.00E+00		1.90E+01	2.90E+01		9.00E+00		1.40E+01
				1.70E+01	3.00E+01	NR	NR	NR	NR
				2.10E+01	1.40E+01	NR	NR	NR	NR
				2.60E+01	1.40E+01	NR	NR	NR	NR
ALUMNUM	PPB	1.50E+02		2.46E+02	3.26E+02				
				1.79E+02	2.92E+02	NR	NR	NR	NR
				2.19E+02	2.14E+02	NR	NR	NR	NR
				3.17E+02		NR	NR	NR	NR
OTASUM	PPB	1.00E+02		2.91E+03	3.78E+03	3.28E+03	2.23E+03	3.21E+03	2.61E+03
				2.76E+03	3.79E+03	NR	NR	NR	NR
				2.84E+03	3.77E+03	NR	NR	NR	NR
				3.34E+03	3.51E+03	NR	NR	NR	NR
IRON	PPB	5.00E+01		3.53E+02	1.26E+02	9.10E+01	4.03E+02	4.31E+02	7.58E+02
				1.61E+02	1.66E+02	NR	NR	NR	NR
				9.70E+01	1.73E+02	NR	NR	NR	NR
				2.75E+02	3.06E+02	NR	NR	NR	NR
ARSENIC	PPB	5.00E+00	5.00E+01	8.00E+00			5.00E+00		9.00E+00
				1.70E+01		NR	NR	NR	NR
				7.00E+00		NR	NR	NR	NR
				8.30E+00		NR	NR	NR	NR

* - VALUE EXCEEDS PRIMARY DRINKING WATER STANDARD.
\# - VALUE EXCEEDS PROPOSED PRIMARY DRINKING WATER STANDARD.
% - VALUE EXCEEDS SCREENING LEVEL FOR FURTHER INVESTIGATION.
@ - DETECTION LIMIT WAS NOT AVAILABLE FOR COMPARISON
NR - ANALYSIS NOT REQUESTED
(+)- WE MPLED IN QUADRUPLICATE; ONLY VALUES >DETECTION LIMIT ARE SH
WATER ST ARD(S) IN PARENTHESES ARE PROPOSED ONLY

DRAFT

MONTHLY SUMMARY OF RESULTS ABOVE DETECTION LIMIT FOR JUN-1985
INPUT FILE:WHC_D.WELLS

DOWN GRADIENT WELLS

CONSTITUENT NAME	UNITS	DETECTION LIMIT	WATER STANDARD	3-1-1(+)	3-1-2(+)	3-1-3	3-1-4	3-1-5	3-1-6
LEADGF	PPB	5.00E+00	2.00E+01			4.80E+01*			
CHLFORM	PPB	1.00E+01		3.00E+01	1.50E+01	4.20E+01	3.00E+01	2.50E+01	3.80E+01
				3.00E+01	1.50E+01	NR	NR	NR	NR
				2.80E+01	1.50E+01	NR	NR	NR	NR
				2.60E+01	1.70E+01	NR	NR	NR	NR
METHYCH	PPB	1.00E+01		1.30E+01$	1.70E+02$				1.80E+01$
TETCENE	PPB	1.00E+01			1.30E+01				
					1.20E+01				
TOC	PPB	1.00E+03		NR	NR	NR	NR	1.25E+03	NR
NITRATE	PPB	5.00E+02	4.50E+04	2.20E+04	2.20E+04	2.04E+04	1.80E+04	1.75E+04	1.80E+04
				2.25E+04	3.80E+04	NR	NR	NR	NR
				2.25E+04	2.00E+04	NR	NR	NR	NR
				2.30E+04	2.10E+04	NR	NR	NR	NR
SULFATE	PPB	5.00E+02		1.70E+04	2.40E+04	1.84E+04	1.70E+04	1.95E+04	1.70E+04
				1.80E+04	2.35E+04	NR	NR	NR	NR
				1.80E+04	2.35E+04	NR	NR	NR	NR
				1.85E+04	2.30E+04	NR	NR	NR	NR
FLUORID	PPB	5.00E+02	1.40E+03			5.00E+02		5.20E+02	5.00E+02
CHLORID	PPB	5.00E+02		8.00E+03	8.50E+03	1.49E+04	8.00E+03	8.00E+03	7.00E+03
				8.10E+03	9.00E+03	NR	NR	NR	NR
				8.50E+03	8.50E+03	NR	NR	NR	NR
				8.50E+03	8.60E+02	NR	NR	NR	NR
SULFIDE	PPB	1.00E+03			3.00E+03				
AMMONIU	PPB	5.00E+01		1.25E+02	1.40E+02	1.75E+02	1.75E+02	2.40E+02	1.70E+02
				1.80E+02	1.50E+02	NR	NR	NR	NR
				1.10E+02	1.50E+02	NR	NR	NR	NR
				1.75E+02	1.10E+02	NR	NR	NR	NR

DRAFT

* - VALUE EXCEEDS PRIMARY DRINKING WATER STANDARD.
\# - VALUE EXCEEDS PROPOSED PRIMARY DRINKING WATER STANDARD.
% - VALUE EXCEEDS SCREENING LEVEL FOR FURTHER INVESTIGATION.
@ - DETECTION LIMIT WAS NOT AVAILABLE FOR COMPARISON
$ - VAL AY BE AFFECTED BY PUMP CONTAMINATION
NR - ANA S NOT REQUESTED
(+)- WELLS SAMPLED IN QUADRUPLICATE; ONLY VALUES >DETECTION LIMIT ARE SHOWN

MONTHLY SUMMARY OF RESULTS ABOVE DETECTION LIMIT FOR JUN 1985
INPUT FILE:WHC_D.WELLS
DOWN GRADIENT WELLS

CONSTITUENT NAME	UNITS	DETECTION LIMIT	WATER STANDARD	3-2-1	3-3-7	3-3-10(+)	3-4-1	3-4-7(+)	6-S30E15A
BETA	PCI/L	8.00E+00	5.00E+01	1.52E+01	1.08E+01	1.84E+01	1.31E+01	3.02E+01	6.80E+01%
				NR	NR	1.65E+01	NR	2.56E+01	NR
				NR	NR	2.05E+01	NR	2.84E+01	NR
				NR	NR	1.97E+01	NR	2.62E+01	NR
CONDUCT	UMHO			2.54E+02@	3.47E+02@	2.51E+02@	3.26E+02@	3.31E+02@	5.48E+02@
PH				6.30E+00@	7.20E+00@	6.70E+00@	7.30E+00@	7.30E+00@	7.50E+00@
LOALPHA	PCI/L	4.00E+00	1.50E+01	1.74E+01%	8.17E+00	1.61E+01%		1.81E+01%	
				NR	NR	6.74E+00	NR	1.99E+01%	NR
				NR	NR	1.91E+01%	NR	2.36E+01%	NR
				NR	NR	8.37E+00	NR	1.07E+01	NR
BARIUM	PPB	6.00E+00	1.00E+03	6.80E+01	5.00E+01			2.12E+02	
CHROMUM	PPB	1.00E+01	5.00E+01			1.00E+01		2.80E+01	
SODIUM	PPB	1.00E+02		1.50E+04	2.40E+04	1.37E+04	1.94E+04	2.13E+04	1.87E+04
				NR	NR	1.31E+04	NR	2.29E+04	NR
				NR	NR	1.45E+04	NR	2.15E+04	NR
				NR	NR	1.33E+04	NR	1.84E+04	NR
COPPER	PPB	1.00E+01	(1.30E+03)	1.60E+01	1.10E+01				
VANADUM	PPB	5.00E+00		1.00E+01	3.40E+01			1.80E+01	
ALUMNUM	PPB	1.50E+02		1.59E+02	5.64E+02	4.95E+02	2.70E+02	2.96E+02	3.95E+02
				NR	NR	3.44E+02	NR	3.47E+02	NR
				NR	NR	1.68E+02	NR	3.37E+02	NR
				NR	NR	2.06E+02	NR	1.88E+02	NR
MANGESE	PPB	5.00E+00		3.90E+01					
POTASUM	PPB	1.00E+02		3.67E+03	6.82E+03	4.53E+03	5.60E+03	5.73E+03	8.21E+03
				NR	NR	4.40E+03	NR	6.31E+03	NR
				NR	NR	4.37E+03	NR	5.88E+03	NR
				NR	NR	4.34E+03	NR	5.12E+03	NR
IRON	PPB	5.00E+01		4.93E+03	2.90E+02	3.21E+02	6.41E+02	1.54E+02	2.18E+02
				NR	NR	3.08E+02	NR	6.60E+01	NR
				NR	NR	5.13E+02	NR		NR
				NR	NR	2.50E+02	NR		NR
ARSENIC	PPB	5.00E+00	5.00E+01	5.00E+00	2.30E+01				
LEADGF	PPB	5.00E+00	2.00E+01			3.40E+01*			6.80E+00
				NR	NR	2.70E+01*	NR	NR	NR
				NR	NR	4.00E+01*	NR	NR	NR
1,1,1-T	PPB	1.00E+01	(2.00E+02)		4.40E+01$				
TRICENE	PPB	1.00E+01	(5.00E+00)				1.20E+01#		
PERCENE	PPB	1.00E+01			3.00E+01				
CHLFORM	PPB	1.00E+01		1.30E+01					
CYANIDE	PPB	1.00E+01			1.40E+01				
NITRATE	PPB	5.00E+02	4.50E+04	2.30E+04	1.30E+04	2.25E+04	1.25E+04	2.02E+04	1.52E+04
				NR	NR	2.10E+04	NR	2.00E+04	NR
				NR	NR	2.28E+04	NR	1.88E+04	NR
				NR	NR	2.31E+04	NR	2.07E+04	NR

* - VALUE EXCEEDS PRIMARY DRINKING WATER STANDARD.
\# - VALUE EXCEEDS PROPOSED PRIMARY DRINKING WATER STANDARD.
% - VALUE EXCEEDS SCREENING LEVEL FOR FURTHER INVESTIGATION.
@ - DETECTION LIMIT WAS NOT AVAILABLE FOR COMPARISON
$ - VALUE MAY BE AFFECTED BY PUMP CONTAMINATION
NR - ANALYSIS NOT REQUESTED
(+)- WELL SAMPLED IN QUADRUPLICATE. ONLY VALUES >DETECTION LIMIT ARE SHOWN

DRAFT

MONTHLY SUMMARY OF RESULTS ABOVE DETECTION LIMIT FOR JUN 1985
INPUT FILE:WHC_D.WELLS

DOWN GRADIENT WELLS

CONSTITUENT NAME	UNITS	DETECTION LIMIT	WATER STANDARD	3-2-1	3-3-7	3-3-10(+)	3-4-1	3-4-7(+)	6-S30E15A
SULFATE	PPB	5.00E+02		1.70E+04	3.60E+04	1.82E+04	3.23E+04	2.71E+04	1.80E+04
				NR	NR	1.83E+04	NR	2.81E+04	NR
				NR	NR	1.95E+04	NR	2.78E+04	NR
				NR	NR	1.94E+04	NR	3.45E+04	NR
CHLORID	PPB	5.00E+02		2.60E+04	1.20E+04	1.28E+04	1.19E+04	1.38E+04	4.70E+03
				NR	NR	1.19E+04	NR	1.40E+04	NR
				NR	NR	1.44E+04	NR	1.37E+04	NR
				NR	NR	1.42E+04	NR	1.36E+04	NR
AMMONIU	PPB	5.00E+01		1.60E+02	1.75E+02	2.00E+02	2.40E+02	2.10E+02	2.05E+02
				NR	NR	2.30E+02	NR	1.70E+02	NR
				NR	NR	2.50E+02	NR	1.80E+02	NR
				NR	NR	2.10E+02	NR	1.80E+02	NR

WELLS 3-T-1 AND 3-T-2 WERE NOT DRILLED IN TIME FOR JUNE SAMPLING

DRAFT

* - VALUE EXCEEDS PRIMARY DRINKING WATER STANDARD.
\# - VALUE EXCEEDS PROPOSED PRIMARY DRINKING WATER STANDARD.
\$ - VALUE EXCEEDS SCREENING LEVEL FOR FURTHER INVESTIGATION.
@ - DETECTION LIMIT WAS NOT AVAILABLE FOR COMPARISON
NR - ANALYSIS NOT REQUESTED
(+) - WELL SAMPLED IN QUADRUPLICATE; ONLY VALUES >DETECTION LIMIT ARE SHOWN

MONTHLY SUMMARY OF RESULTS ABOVE DETECTION LIMIT FOR JUL 1985
INPUT FILE:UNC_U.WELLS

UP GRADIENT WELLS

CONSTITUENT NAME	UNITS	DETECTION LIMIT	WATER STANDARD	1-H3-1(0)	1-H4-6
COLIFRM	MPN	3.00E+00	>DL		4.00E+00*
BETA	PCI/L	8.00E+00	5.00E+01	8.89E+00	
				4.12E+02%	NR
				1.16E+01	NR
CONDUCT	UMHO			5.61E+02@	2.93E+02@
PH				7.70E+00@	6.70E+00@
LOALPHA	PCI/L	4.00E+00	1.50E+01	8.54E+00	
				5.63E+00	NR
				6.57E+00	NR
ZINC	PPB	5.00E+00		1.33E+02	NR
				3.00E+01	NR
				2.70E+01	NR
CALCIUM	PPB	5.00E+01		7.40E+04	NR
				7.50E+04	NR
				7.47E+04	NR
BARIUM	PPB	6.00E+00	1.00E+03	1.75E+02	
				5.20E+01	NR
				5.30E+01	NR
CADMIUM	PPB	2.00E+00	1.00E+01	2.10E+00	
CHROMUM	PPB	1.00E+01	5.00E+01	3.10E+01	2.60E+01
				5.10E+01*	NR
				3.00E+01	NR
SODIUM	PPB	1.00E+02		2.20E+04	1.80E+04
				1.95E+04	NR
				1.82E+04	NR
COPPER	PPB	1.00E+01	(1.30E+03)	1.50E+01	
VANADUM	PPB	5.00E+00		2.00E+01	
				2.00E+01	NR
				2.00E+01	NR
ALUMNUM	PPB	1.50E+02		2.08E+02	2.25E+02
				5.60E+02	NR
MANGESE	PPB	5.00E+00		8.50E+00	4.20E+01
				2.10E+01	NR
POTASUM	PPB	1.00E+02		7.50E+03	5.58E+03
				6.98E+03	NR
				6.54E+03	NR
IRON	PPB	5.00E+01		3.86E+02	3.99E+02
				2.35E+02	NR
				1.58E+02	NR
MERCURY	PPB	1.00E-01	2.00E+00	5.20E+00*	
				4.30E+00*	NR
CHLFORM	PPB	1.00E+01		1.00E+01	
				1.40E+01	

* - VALUE EXCEEDS PRIMARY DRINKING WATER STANDARD.
@ - VALUE EXCEEDS PROPOSED PRIMARY DRINKING WATER STANDARD.
% - VALUE EXCEEDS SCREENING LEVEL FOR FURTHER INVESTIGATION.
@ - DETECTION LIMIT WAS NOT AVAILABLE FOR COMPARISON
NR - ANALYSIS NOT REQUESTED
(0)- WELL SAMPLED IN TRIPLICATE; ONLY VALUES >DETECTION LIMIT ARE SHOWN
WATER STANDARD(S) IN PARENTHESES ARE PROPOSED ONLY

DRAFT

MONTHLY SUMMARY OF RESULTS ABOVE DETECTION LIMIT FOR JUL 1985
INPUT FILE:UNC_U.WELLS

UP GRADIENT WELLS

CONSTITUENT NAME	UNITS	DETECTION LIMIT	WATER STANDARD	1-H3-1(0)	1-H4-6
TOC	PPB	1.00E+03		1.33E+03	
				1.44E+03	NR
				1.60E+03	NR
NITRATE	PPB	5.00E+02	4.50E+04	7.91E+04*	2.01E+04
				6.83E+04*	NR
				6.75E+04*	NR
SULFATE	PPB	5.00E+02		7.80E+04	4.50E+04
				6.73E+04	NR
				6.71E+04	NR
FLUORID	PPB	5.00E+02	1.40E+03	5.50E+02	7.30E+02
				1.08E+03	NR
				6.30E+02	NR
CHLORID	PPB	5.00E+02		9.20E+03	5.40E+03
				9.60E+03	NR
				8.20E+03	NR
AMMONIU	PPB	5.00E+01		2.30E+02	2.70E+02
				1.75E+02	NR
				1.80E+02	NR

DRAFT

* - VALUE EXCEEDS PRIMARY DRINKING WATER STANDARD.
\# - VALUE EXCEEDS PROPOSED PRIMARY DRINKING WATER STANDARD.
\$ - VALUE EXCEEDS SCREENING LEVEL FOR FURTHER INVESTIGATION.
@ - DETECTION LIMIT WAS NOT AVAILABLE FOR COMPARISON
NR - ANALYSIS NOT REQUESTED
(0)- WELL SAMPLED IN TRIPLICATE; ONLY VALUES >DETECTION LIMIT ARE SHOWN

MONTHLY SUMMARY OF RESULTS ABOVE DETECTION LIMIT FOR JUL 1985
INPUT FILE:UNC_D.WELLS

DOWN GRADIENT WELLS

CONSTITUENT NAME	UNITS	DETECTION LIMIT	WATER STANDARD	1-H4-3	1-H4-4	1-H4-5(+)
COLIFRM	MPN	3.00E+00	>DL	2.30E+01*	2.30E+01*	
BETA	PCI/L	8.00E+00	5.00E+01	1.02E+01	3.40E+02%	2.22E+01
				NR	NR	8.84E+00
CONDUCT	UMHO			1.50E+03@	1.25E+03@	3.46E+02@
PH				7.90E+00@	7.70E+00@	7.50E+00@
LOALPHA	PCI/L	4.00E+00	1.50E+01	1.96E+02%	1.46E+02%	2.66E+01%
ZINC	PPB	5.00E+00		2.00E+01	NR	NR
CALCIUM	PPB	5.00E+01		2.94E+04	NR	NR
BARIUM	PPB	6.00E+00	1.00E+03	4.90E+01		
CHROMUM	PPB	1.00E+01	5.00E+01	1.03E+03*	7.29E+02*	4.47E+02*
				NR	NR	4.51E+02*
				NR	NR	4.82E+02*
				NR	NR	5.08E+02*
SODIUM	PPB	1.00E+02		2.67E+05	1.69E+05	9.00E+03
				NR	NR	8.89E+03
				NR	NR	9.44E+03
				NR	NR	9.86E+03
NICKEL	PPB	1.00E+01		3.20E+01		
COPPER	PPB	1.00E+01	(1.30E+03)	4.30E+01		
VANADUM	PPB	5.00E+00		1.40E+01		
ALUMNUM	PPB	1.50E+02		2.37E+02	3.04E+02	1.82E+02
				NR	NR	1.86E+02
				NR	NR	2.52E+02
				NR	NR	5.31E+02
MANGESE	PPB	5.00E+00		8.50E+00		1.50E+01
POTASUM	PPB	1.00E+02		6.35E+03	6.93E+03	5.74E+03
IRON	PPB	5.00E+01		3.77E+02	8.91E+02	9.10E+01
				NR	NR	1.96E+02
				NR	NR	2.56E+02
				NR	NR	5.99E+02
ARSENIC	PPB	5.00E+00	5.00E+01			6.30E+00
MERCURY	PPB	1.00E-01	2.00E+00	4.90E+00*	7.40E+00*	
SELENUM	PPB	5.00E+00	1.00E+01			1.50E+01*
				NR	NR	1.00E+01
PERCENE	PPB	1.00E+01		1.00E+01		
TOC	PPB	1.00E+03		2.49E+03	2.97E+03	1.12E+03
				NR	NR	1.07E+03
				NR	NR	1.30E+03
NITRATE	PPB	5.00E+02	4.50E+04	6.21E+05*	5.10E+05*	2.30E+04
				NR	NR	2.25E+04
				NR	NR	2.51E+04
				NR	NR	2.45E+04

* - VALUE EXCEEDS PRIMARY DRINKING WATER STANDARD.
\# - VALUE EXCEEDS PROPOSED PRIMARY DRINKING WATER STANDARD.
% - VALUE EXCEEDS SCREENING LEVEL FOR FURTHER INVESTIGATION.
@ - DETECTION LIMIT WAS NOT AVAILABLE FOR COMPARISON
NR - ANALYSIS NOT REQUESTED
(+)- WELL SAMPLED IN QUADRUPLICATE; ONLY VALUES >DETECTION LIMIT ARE SHOWN
WATER STANDARD(S) IN PARENTHESES ARE PROPOSED ONLY

DRAFT

MONTHLY SUMMARY OF RESULTS ABOVE DETECTION LIMIT FOR JUL 1985
INPUT FILE:UNC_D.WELLS

DOWN GRADIENT WELLS

CONSTITUENT NAME	UNITS	DETECTION LIMIT	WATER STANDARD	1-H4-3	1-H4-4	1-H4-5(+)
SULFATE	PPB	5.00E+02		8.99E+04	8.41E+04	3.97E+04
				NR	NR	3.97E+04
				NR	NR	4.40E+04
				NR	NR	4.26E+04
FLUORID	PPB	5.00E+02	1.40E+03	5.00E+02	7.00E+02	8.10E+02
				NR	NR	7.80E+02
				NR	NR	7.60E+02
				NR	NR	7.40E+02
CHLORID	PPB	5.00E+02		7.10E+03	5.30E+03	4.10E+03
				NR	NR	4.10E+03
				NR	NR	4.50E+03
				NR	NR	5.50E+03
AMMONIU	PPB	5.00E+01		2.40E+02	2.30E+02	2.20E+02
				NR	NR	2.40E+02
				NR	NR	2.50E+02
				NR	NR	2.10E+02

DRAFT

* - VALUE EXCEEDS PRIMARY DRINKING WATER STANDARD.
\# - VALUE EXCEEDS PROPOSED PRIMARY DRINKING WATER STANDARD.
\$ - VALUE EXCEEDS SCREENING LEVEL FOR FURTHER INVESTIGATION.
@ - DETECTION LIMIT WAS NOT AVAILABLE FOR COMPARISON
NR - ANALYSIS NOT REQUESTED

MONTHLY SUMMARY OF RESULTS ABOVE DE. .TION LIMIT FOR JUL 1985

INPUT FILE:WHC_U.WELLS

UP GRADIENT WELLS

CONSTITUENT NAME	UNITS	DETECTION LIMIT	WATER STANDARD	3-8-2	6-S19-E13
COLIFRM	MPN	3.00E+00	>DL	1.50E+02*	
BETA	PCI/L	8.00E+00	5.00E+01	1.23E+01	
CONDUCT	UMHO			3.38E+02@	3.68E+02@
PH				7.40E+00@	7.30E+00@
LOALPHA	PCI/L	4.00E+00	1.50E+01		5.15E+00
ZINC	PPB	5.00E+00		NR	5.10E+01
CALCIUM	PPB	5.00E+01		NR	4.90E+04
SODIUM	PPB	1.00E+02		1.97E+04	2.48E+04
ALUMNUM	PPB	1.50E+02		2.88E+02	3.45E+02
POTASUM	PPB	1.00E+02		6.55E+03	8.06E+03
IRON	PPB	5.00E+01		1.77E+02	1.50E+02
SELENUM	PPB	5.00E+00	1.00E+01	1.20E+01*	1.20E+01*
CADGF	PPB	5.00E+00	2.00E+01	5.90E+00	
NITRATE	PPB	5.00E+02	4.50E+04	2.16E+04	2.05E+04
SULFATE	PPB	5.00E+02		3.12E+04	4.90E+04
CHLORID	PPB	5.00E+02		9.30E+03	1.88E+04
AMMONIU	PPB	5.00E+01		1.70E+02	1.65E+02

* - VALUE EXCEEDS PRIMARY DRINKING WATER STANDARD.
\# - VALUE EXCEEDS PROPOSED PRIMARY DRINKING WATER STANDARD.
\$ - VALUE EXCEEDS SCREENING LEVEL FOR FURTHER INVESTIGATION.
@ - DETECTION LIMIT WAS NOT AVAILABLE FOR COMPARISON
NR - ANALYSIS NOT REQUESTED
WATER STANDARD(S) IN PARENTHESES ARE PROPOSED ONLY

DRAFT

MONTHLY SUMMARY OF RESULTS ABOVE DETECTION LIMIT FOR JUL 1985
INPUT FILE:WHC_D.WELLS

DOWN GRADIENT WELLS

CONSTITUENT NAME	UNITS	DETECTION LIMIT	WATER STANDARD	3-1-1(+)	3-1-2(+)	3-1-3	3-1-4	3-1-5(0)	3-1-6
COLIFRM	MPN	3.00E+00	>DL				1.10E+03*		
BETA	PCI/L	8.00E+00	5.00E+01	9.24E+00	1.75E+01	5.34E+01%	1.02E+01	1.40E+01	1.99E+01
				1.60E+01	1.45E+01	NR	NR	1.58E+01	NR
				8.35E+00	1.52E+01	NR	NR	1.59E+01	NR
				8.89E+00	1.85E+01	NR	NR	NR	NR
CONDUCT	UMHO			1.97E+02@	2.20E+02@	2.32E+02@	1.52E+02@	1.72E+02@	1.77E+02@
PH				7.20E+00@	7.30E+00@	7.20E+00@	6.10E+00@	7.00E+00@	6.40E+00@
LOALPHA	PCI/L	4.00E+00	1.50E+01	1.91E+01%	9.66E+00	2.32E+01%	4.18E+00	4.22E+00	2.45E+01%
				1.92E+01%	5.59E+00	NR	NR	4.75E+00	NR
				1.51E+01%	6.27E+00	NR	NR	6.60E+00	NR
				1.69E+01%	8.87E+00	NR	NR	NR	NR
INC	PPB	5.00E+00		NR	NR	NR	NR	3.60E+01	NR
				NR	NR	NR	NR	7.90E+01	NR
				NR	NR	NR	NR	1.78E+02	NR
CALCIUM	PPB	5.00E+01		NR	NR	NR	NR	1.79E+04	NR
				NR	NR	NR	NR	1.91E+04	NR
				NR	NR	NR	NR	1.97E+04	NR
BARIUM	PPB	6.00E+00	1.00E+03	8.30E+02	2.80E+01	5.40E+01		2.40E+01	
				1.45E+02	3.50E+01	NR	NR	4.20E+01	NR
				3.50E+01	3.90E+01	NR	NR	2.33E+02	NR
				8.00E+01	3.90E+01	NR	NR	NR	NR
CADMIUM	PPB	2.00E+00	1.00E+01					2.30E+00	
				NR	NR	NR	NR	6.60E+00	NR
CHROMUM	PPB	1.00E+01	5.00E+01						2.57E+02*
SILVER	PPB	1.00E+01	5.00E+01		1.90E+01				
SODIUM	PPB	1.00E+02		1.31E+04	2.97E+04	1.96E+04	1.04E+04	1.30E+04	1.55E+04
				1.27E+04	1.31E+04	NR	NR	1.12E+04	NR
				1.22E+03	1.49E+04	NR	NR	1.27E+04	NR
				1.28E+04	1.49E+04	NR	NR	NR	NR
NICKEL	PPB	1.00E+01				1.00E+01		1.00E+01	9.50E+01
COPPER	PPB	1.00E+01	(1.30E+03)		4.00E+01	2.70E+01		1.20E+01	2.70E+01
					1.90E+01	NR	NR	5.16E+02	NR
					1.90E+01	NR	NR		NR
VANADUM	PPB	5.00E+00		1.20E+01	8.70E+00	7.80E+00		7.00E+00	
				1.30E+01	1.30E+01	NR	NR	7.40E+00	NR
				9.90E+00	1.60E+01	NR	NR	1.20E+01	NR
				1.00E+01	1.60E+01	NR	NR	NR	NR
ALUMNUM	PPB	1.50E+02			1.75E+02	1.16E+03	2.46E+02	1.21E+03	2.35E+02
					2.43E+02	NR	NR		NR
					5.73E+02	NR	NR		NR
					5.73E+02	NR	NR	NR	NR
MANGESE	PPB	5.00E+00							4.90E+01

* - VALUE EXCEEDS PRIMARY DRINKING WATER STANDARD.
\# - VALUE EXCEEDS PROPOSED PRIMARY DRINKING WATER STANDARD.
% - VALUE EXCEEDS SCREENING LEVEL FOR FURTHER INVESTIGATION.
@ - DETECTION LIMIT WAS NOT AVAILABLE FOR COMPARISON
NR - ANALYSIS NOT REQUESTED
(+)- WELL SAMPLED IN QUADRUPLICATE; ONLY VALUES >DETECTION LIMIT ARE SHOWN
(0)- WELL SAMPLED IN TRIPLICATE; ONLY VALUES >DETECTION LIMIT ARE SHOWN
WATER STANDARD(S) IN PARENTHESES ARE PROPOSED ONLY

DRAFT

MONTHLY SUMMARY OF RESULTS ABOVE DETECTION LIMIT FOR JUL 1985
INPUT FILE:WHC_D.WELLS

DOWN GRADIENT WELLS

CONSTITUENT NAME	UNITS	DETECTION LIMIT	WATER STANDARD	3-1-1(+)	3-1-2(+)	3-1-3	3-1-4	3-1-5(0)	3-1-6
POTASUM	PPB	1.00E+02		2.97E+03	3.75E+03	3.65E+03		3.29E+03	3.55E+03
				2.79E+03	3.83E+03	NR	NR	3.47E+03	NR
				2.71E+03	4.18E+03	NR	NR		NR
				2.77E+03	4.18E+03	NR	NR	NR	NR
IRON	PPB	5.00E+01		5.90E+01	9.20E+01	3.75E+02	1.76E+02	1.94E+02	9.70E+02
				5.50E+01	1.77E+02	NR	NR	1.51E+02	NR
				7.30E+01	2.22E+02	NR	NR	1.91E+03	NR
					2.22E+02	NR	NR	NR	NR
MERCURY	PPB	1.00E-01	2.00E+00		4.80E+00*	5.80E+00*		8.90E+00*	
					6.20E+00*	NR	NR	6.30E+00*	NR
					4.30E+00*	NR	NR	5.50E+00*	NR
					5.60E+00*	NR	NR	NR	NR
LEADGF	PPB	5.00E+00	2.00E+01		1.20E+01			5.80E+00	
					1.20E+01	NR	NR		NR
					1.18E+01	NR	NR		NR
					1.32E+01	NR	NR	NR	NR
PERCENE	PPB	1.00E+01				1.00E+01		1.70E+01	
						NR	NR	1.90E+01	NR
						NR	NR	1.70E+01	NR
CHLFORM	PPB	1.00E+01		2.80E+01	2.70E+01		3.20E+01	2.10E+01	
				3.20E+01	2.00E+01	NR	NR	2.70E+01	NR
				3.00E+01	1.30E+01	NR	NR	3.20E+01	NR
				3.20E+01	1.90E+01	NR	NR	NR	NR
METHYCH	PPB	1.00E+01						1.90E+01$	
						NR	NR	1.10E+01	NR
TOC	PPB	1.00E+03		1.23E+03		1.01E+03	1.40E+03	4.51E+03	1.28E+03
				1.23E+03		NR	NR	1.07E+03	NR
				1.09E+03		NR	NR	1.65E+03	NR
NITRATE	PPB	5.00E+02	4.50E+04	2.08E+04	1.75E+04	1.74E+04	8.50E+03	1.50E+04	1.41E+04
				2.08E+04	1.82E+04	NR	NR	1.47E+04	NR
				1.84E+04	1.73E+04	NR	NR	1.41E+04	NR
				2.23E+04	1.85E+04	NR	NR	NR	NR
SULFATE	PPB	5.00E+02		1.74E+04	2.00E+04	1.59E+04	1.37E+04	1.37E+04	1.39E+04
				1.78E+04	2.10E+04	NR	NR	1.34E+04	NR
				1.59E+04	2.00E+04	NR	NR	1.29E+04	NR
				1.89E+04	2.13E+04	NR	NR	NR	NR
FLUORID	PPB	5.00E+02	1.40E+03	8.10E+02	8.50E+02	6.40E+02	6.00E+02	1.22E+03	5.00E+02
				8.90E+02	9.00E+02	NR	NR	1.31E+03	NR
				7.60E+02	8.60E+02	NR	NR	1.26E+03	NR
				9.80E+02	9.70E+02	NR	NR	NR	NR
CHLORID	PPB	5.00E+02		1.07E+04	1.06E+04	1.29E+04	1.18E+04	6.60E+03	1.02E+04
				1.12E+04	1.11E+04	NR	NR	6.50E+03	NR
				9.80E+03	1.05E+04	NR	NR	6.30E+03	NR
				1.20E+04	1.13E+04	NR	NR	NR	NR

* - VALUE EXCEEDS PRIMARY DRINKING WATER STANDARD.
\# - VALUE EXCEEDS PROPOSED PRIMARY DRINKING WATER STANDARD.
& - VALUE EXCEEDS SCREENING LEVEL FOR FURTHER INVESTIGATION.
@ - DETECTION LIMIT WAS NOT AVAILABLE FOR COMPARISON
$ - VALUES MAY BE AFFECTED BY PUMP CONTAMINATION
NR - ANALYSIS NOT REQUESTED
(+)- WELL SAMPLED IN QUADRUPLICATE; ONLY VALUES >DETECTION LIMIT ARE SHOWN

DRAFT

MONTHLY SUMMARY OF RESULTS ABOVE DETECTION LIMIT FOR JUL 1985
INPUT FILE:WHC_D.WELLS

DOWN GRADIENT WELLS

CONSTITUENT NAME	UNITS	DETECTION LIMIT	WATER STANDARD	3-1-1(+)	3-1-2(+)	3-1-3	3-1-4	3-1-5(0)	3-1-6
AMMONIU	PPB	5.00E+01		2.70E+02	3.30E+02	1.80E+02	1.80E+02	3.60E+02	1.65E+02
				2.40E+02	2.90E+02	NR	NR	2.30E+02	NR
				2.50E+02	2.80E+02	NR	NR	2.10E+02	NR
				2.50E+02	2.80E+02	NR	NR	NR	NR
ACETONE	PPB	1.00E+01						1.40E+01	
HEXANE	PPB	1.00E+01			6.00E+01				
UNKNOWN	PPB	1.00E+01			3.50E+01			1.50E+01	
						NR	NR	1.10E+01	NR
						NR	NR	1.00E+01	NR

DRAFT

* - VALUE EXCEEDS PRIMARY DRINKING WATER STANDARD.
\# - VALUE EXCEEDS PROPOSED PRIMARY DRINKING WATER STANDARD.
\! - VALUE EXCEEDS SCREENING LEVEL FOR FURTHER INVESTIGATION.
@ - DETECTION LIMIT WAS NOT AVAILABLE FOR COMPARISON
$ - VALUES MAY BE AFFECTED BY PUMP CONTAMINATION
NR - ANALYSIS NOT REQUESTED
(+)- WELL SAMPLED IN QUADRUPLICATE; ONLY VALUES >DETECTION LIMIT ARE SHOWN
(0)- WELL SAMPLED IN TRIPLICATE; ONLY VALUES >DETECTION LIMIT ARE SHOWN

MONTHLY SUMMARY OF RESULTS ABOVE DETECTION LIMIT FOR JUL 1985
INPUT FILE:WHC_D.WELLS

DOWN GRADIENT WELLS

CONSTITUENT NAME	UNITS	DETECTION LIMIT	WATER STANDARD	3-2-1	3-3-7	3-3-10(+)	3-4-1	3-4-7(+)	6-S30E15A
COLIFRM	MPN	3.00E+00	>DL	2.30E+01*			2.30E+01*		
BETA	PCI/L	8.00E+00	5.00E+01	1.88E+01	8.66E+00	1.35E+01	1.59E+01	2.07E+01	1.37E+01
				NR	NR	1.42E+01	NR	2.66E+01	NR
				NR	NR	1.95E+01	NR	2.58E+01	NR
				NR	NR	1.72E+01	NR	2.00E+01	NR
CONDUCT	UMHO			2.10E+02@	3.24E+02@	2.41E+02@	3.22E+02@	3.30E+02@	4.82E+02@
PH				6.10E+00@	6.90E+00@	6.90E+00@	7.40E+00@	7.50E+00@	7.00E+00@
LOALPHA	PCI/L	4.00E+00	1.50E+01	2.42E+01%	6.86E+00	1.43E+01		5.71E+01%	
				NR	NR	1.24E+01	NR	4.40E+01%	NR
				NR	NR	1.41E+01	NR	1.84E+01%	NR
				NR	NR	1.58E+01%	NR		NR
BARIUM	PPB	6.00E+00	1.00E+03			4.30E+01		5.20E+01	7.70E+01
				NR	NR	5.00E+01	NR	5.90E+01	NR
				NR	NR	1.83E+02	NR	4.90E+01	NR
				NR	NR	4.20E+01	NR	4.60E+01	NR
CHROMUM	PPB	1.00E+01	5.00E+01			3.80E+01			
SODIUM	PPB	1.00E+02		1.04E+04	2.34E+04	1.17E+04	1.53E+04	2.09E+04	1.75E+04
				NR	NR	1.20E+04	NR	2.03E+04	NR
				NR	NR	1.16E+04	NR	2.08E+04	NR
				NR	NR	1.10E+04	NR	2.23E+04	NR
NICKEL	PPB	1.00E+01				1.60E+01			
COPPER	PPB	1.00E+01	(1.30E+03)			1.30E+01		1.20E+01	1.00E+01
				NR	NR		NR	2.50E+01	NR
				NR	NR		NR	1.00E+01	NR
VANADUM	PPB	5.00E+00				9.40E+00		1.40E+01	1.70E+01
				NR	NR	1.20E+01	NR	1.50E+01	NR
				NR	NR	1.30E+01	NR	1.50E+01	NR
				NR	NR	1.40E+01	NR	9.10E+00	NR
ALUMNUM	PPB	1.50E+02		2.46E+02		2.22E+02	2.29E+02	1.76E+02	2.09E+02
				NR	NR	1.92E+02	NR	1.60E+02	NR
				NR	NR	2.68E+02	NR	1.98E+02	NR
				NR	NR	2.63E+02	NR		NR
POTASUM	PPB	1.00E+02			5.21E+03	3.86E+03		5.81E+03	8.61E+03
				NR	NR	4.06E+03	NR	5.30E+03	NR
				NR	NR	4.11E+03	NR	5.50E+03	NR
				NR	NR	4.05E+03	NR	5.72E+03	NR
IRON	PPB	5.00E+01		1.76E+02	1.03E+02	4.01E+02	2.71E+02	1.62E+02	1.42E+02
				NR	NR	2.33E+02	NR	1.83E+02	NR
				NR	NR	2.73E+02	NR	2.63E+02	NR
				NR	NR	4.81E+02	NR	1.06E+02	NR
ARSENIC	PPB	5.00E+00	5.00E+01					5.80E+00	
MERCURY	PPB	1.00E-01	2.00E+00			5.80E+00*		7.90E+00*	7.00E+00*
				NR	NR	8.20E+00*	NR	9.90E+00*	NR
				NR	NR	4.70E+00*	NR	6.60E+00*	NR
				NR	NR	7.40E+00*	NR	5.20E+00*	NR

* - VALUE EXCEEDS PRIMARY DRINKING WATER STANDARD.
\# - VALUE EXCEEDS PROPOSED PRIMARY DRINKING WATER STANDARD.
% - VALUE EXCEEDS SCREENING LEVEL FOR FURTHER INVESTIGATION.
@ - DETECTION LIMIT WAS NOT AVAILABLE FOR COMPARISON
NR - ANALYSIS NOT REQUESTED
(+)- WELL SAMPLED IN QUADRUPLICATE; ONLY VALUES >DETECTION LIMIT ARE SHOWN
WATER STANDARD(S) IN PARENTHESES ARE PROPOSED ONLY

DRAFT

9 3 1 2 7 6 0 2 0 8 4

MONTHLY SUMMARY OF RESULTS ABOVE DE. .TION LIMIT FOR JUL 1985

INPUT FILE:WHC_D.WELLS

DOWN GRADIENT WELLS

CONSTITUENT NAME	UNITS	DETECTION LIMIT	WATER STANDARD	3-2-1	3-3-7	3-3-10(+)	3-4-1	3-4-7(+)	6-S30E15A
SELENUM	PPB	5.00E+00	1.00E+01		8.90E+00		1.70E+01*		
LEADGF	PPB	5.00E+00	2.00E+01			5.00E+00		5.00E+00	5.50E+00
				NR	NR	5.20E+00	NR		NR
				NR	NR	6.20E+00	NR		NR
1,1,1-T	PPB	1.00E+01	(2.00E+02)		7.20E+01$				
PERCENE	PPB	1.00E+01			5.50E+01	1.10E+01	1.30E+01		
CHLFORM	PPB	1.00E+01		1.70E+01					
TOC	PPB	1.00E+03		1.28E+03				1.07E+03	1.76E+03
NITRATE	PPB	5.00E+02	4.50E+04	2.36E+04	1.37E+04	1.94E+04	1.15E+04	1.74E+04	1.62E+04
				NR	NR	2.13E+04	NR	1.56E+04	NR
				NR	NR	2.01E+04	NR	1.61E+04	NR
				NR	NR	2.08E+04	NR	1.51E+04	NR
SULFATE	PPB	5.00E+02		1.82E+04	3.83E+04	1.78E+04	1.32E+04	3.31E+04	1.81E+04
				NR	NR	1.92E+04	NR	2.96E+04	NR
				NR	NR	1.83E+04	NR	3.07E+04	NR
				NR	NR	1.89E+04	NR	2.88E+04	NR
FLUORID	PPB	5.00E+02	1.40E+03	6.00E+02	8.00E+02	8.90E+02		9.20E+02	8.30E+02
				NR	NR	1.11E+03	NR	1.24E+03	NR
				NR	NR	9.20E+02	NR	9.40E+02	NR
				NR	NR	9.80E+02	NR	8.60E+02	NR
CHLORID	PPB	5.00E+02		1.40E+04	1.41E+04	1.04E+04	1.08E+04	1.33E+04	4.60E+03
				NR	NR	1.16E+04	NR	1.19E+04	NR
				NR	NR	1.10E+04	NR	1.24E+04	NR
				NR	NR	1.12E+04	NR	1.16E+04	NR
AMMONIU	PPB	5.00E+01		2.80E+02	2.70E+02	2.90E+02	1.78E+02	3.05E+02	2.90E+02
				NR	NR	3.10E+02	NR	2.70E+02	NR
				NR	NR	3.00E+02	NR	3.30E+02	NR
				NR	NR	1.90E+02	NR	3.60E+02	NR
ACETONE	PPB	1.00E+01				2.60E+01			
HEXANE	PPB	1.00E+01						6.00E+01	
MECYPEN	PPB	1.00E+01						1.60E+01	

DRAFT

* - VALUE EXCEEDS PRIMARY DRINKING WATER STANDARD.
\# - VALUE EXCEEDS PROPOSED PRIMARY DRINKING WATER STANDARD.
\% - VALUE EXCEEDS SCREENING LEVEL FOR FURTHER INVESTIGATION.
@ - DETECTION LIMIT WAS NOT AVAILABLE FOR COMPARISON
$ - VALUE MAY BE AFFECTED BY PUMP CONTAMINATION
NR - ANALYSIS NOT REQUESTED

MONTHLY SUMMARY OF RESULTS ABOVE L[illegible]CTION LIMIT FOR JUL 1985

INPUT FILE:WHC_D.WELLS

DOWN GRADIENT WELLS

CONSTITUENT NAME	UNITS	DETECTION LIMIT	WATER STANDARD	3-T-1	3-T-2(1)
BETA	PCI/L	8.00E+00	5.00E+01	4.73E+01	NR
CONDUCT	UMHO			2.33E+02@	NR
LOALPHA	PCI/L	4.00E+00	1.50E+01	2.31E+01%	NR
BARIUM	PPB	6.00E+00	1.00E+03	1.01E+02	NR
CADMIUM	PPB	2.00E+00	1.00E+01	5.30E+00	NR
CHROMUM	PPB	1.00E+01	5.00E+01	2.50E+01	NR
SODIUM	PPB	1.00E+02		1.97E+04	NR
COPPER	PPB	1.00E+01	(1.30E+03)	1.70E+01	NR
VANADUM	PPB	5.00E+00		1.00E+01	NR
ALUMNUM	PPB	1.50E+02		3.95E+02	NR
POTASUM	PPB	1.00E+02		3.34E+03	NR
IRON	PPB	5.00E+01		5.01E+02	NR
MERCURY	PPB	1.00E-01	2.00E+00	5.40E+00*	NR
PERCENE	PPB	1.00E+01		2.40E+01	NR
METHYCH	PPB	1.00E+01		1.70E+01$	NR
NITRATE	PPB	5.00E+02	4.50E+04	1.75E+04	NR
SULFATE	PPB	5.00E+02		1.56E+04	NR
FLUORID	PPB	5.00E+02	1.40E+03	6.60E+02	NR
CHLORID	PPB	5.00E+02		1.33E+04	NR
AMMONIU	PPB	5.00E+01		2.40E+02	NR

DRAFT

* - VALUE EXCEEDS PRIMARY DRINKING WATER STANDARD.
\# - VALUE EXCEEDS PROPOSED PRIMARY DRINKING WATER STANDARD.
% - VALUE EXCEEDS SCREENING LEVEL FOR FURTHER INVESTIGATION.
@ - DETECTION LIMIT WAS NOT AVAILABLE FOR COMPARISON
$ - VALUES MAY BE AFFECTED BY PUMP CONTAMINATION
NR - ANALYSIS NOT REQUESTED
(1)- WELL NOT YET DRILLED
WATER STANDARD(S) IN PARENTHESES ARE PROPOSED ONLY

MONTHLY SUMMARY OF RESULTS ABOVE DETECTION LIMIT FOR AUG 1985
INPUT FILE:UNC_U.WELLS

UP GRADIENT WELLS

CONSTITUENT NAME	UNITS	DETECTION LIMIT	WATER STANDARD	1-H3-1(0)	1-H4-6
BETA	PCI/L	8.00E+00	5.00E+01	1.50E+01	
				8.42E+00	NR
				1.18E+01	NR
CONDUCT	UMHO			VM	3.29E+02@
PH				VM	7.80E+00@
LOALPHA	PCI/L	4.00E+00	1.50E+01	4.03E+00	
				4.87E+00	NR
				4.33E+00	NR
STRONUM	PPB	3.00E+02		4.15E+02	NR
				4.19E+02	NR
CALCIUM	PPB	5.00E+01		6.29E+04	NR
				6.03E+04	NR
				6.09E+04	NR
ARIUM	PPB	6.00E+00	1.00E+03	4.50E+01	2.50E+01
				4.30E+01	NR
				4.50E+01	NR
CHROMUM	PPB	1.00E+01	5.00E+01	3.30E+01	2.80E+01
				3.00E+01	NR
				3.00E+01	NR
SODIUM	PPB	1.00E+02		1.87E+04	1.67E+04
				1.75E+04	NR
				1.76E+04	NR
VANADUM	PPB	5.00E+00		9.00E+00	9.00E+00
				9.00E+00	NR
MANGESE	PPB	5.00E+00			3.20E+01
POTASUM	PPB	1.00E+02		5.73E+03	5.11E+03
				5.27E+03	NR
				5.37E+03	NR
IRON	PPB	5.00E+01		5.00E+01	2.82E+02
CHLFORM	PPB	1.00E+01		1.40E+01	
TOC	PPB	1.00E+03		2.16E+03	1.64E+03
				2.13E+03	NR
				2.10E+03	NR
'ITRATE	PPB	5.00E+02	4.50E+04	6.57E+04*	1.93E+04
				6.80E+04*	NR
				6.98E+04*	NR
SULFATE	PPB	5.00E+02		6.38E+04	4.38E+04
				6.61E+04	NR
				6.80E+04	NR
CHLORID	PPB	5.00E+02		8.21E+03	6.26E+03
				7.69E+03	NR
				8.24E+03	NR
AMMONIU	PPB	5.00E+01		1.60E+02	1.55E+02
				1.30E+02	NR
				1.26E+02	NR

* - VALUE EXCEEDS PRIMARY DRINKING WATER STANDARD.
# - VALUE EXCEEDS PROPOSED PRIMARY DRINKING WATER STANDARD.
% - VALUE EXCEEDS SCREENING LEVEL FOR FURTHER INVESTIGATION.
@ - DETECTION LIMIT WAS NOT AVAILABLE FOR COMPARISON
NR - ANALYSIS NOT REQUESTED
VM - VALUE MISSING DUE TO PROBLEMS IN ANALYSIS OR COLLECTION
(0)- WELL SAMPLED IN TRIPLICATE; ONLY VALUES >DETECTION LIMIT ARE SHOWN
WATER STANDARD(S) IN PARENTHESES ARE PROPOSED ONLY

DRAFT

MONTHLY SUMMARY OF RESULTS ABOVE DETECTION LIMIT FOR AUG 1985
INPUT FILE:UNC_D.WELLS

DOWN GRADIENT WELLS

CONSTITUENT NAME	UNITS	DETECTION LIMIT	WATER STANDARD	1-H4-3	1-H4-4	1-H4-5(+)
BETA	PCI/L	8.00E+00	5.00E+01	5.16E+02%	3.84E+02%	9.14E+00
				NR	NR	1.02E+01
CONDUCT	UMHO			1.18E+03@	1.23E+03@	4.01E+02@
PH				8.00E+00@	7.50E+00@	7.80E+00@
LOALPHA	PCI/L	4.00E+00	1.50E+01	1.73E+02%	7.76E+01%	
CALCIUM	PPB	5.00E+01		1.57E+04	NR	NR
BARIUM	PPB	6.00E+00	1.00E+03	2.60E+01	7.90E+01	4.50E+01
				NR	NR	4.30E+01
				NR	NR	4.60E+01
				NR	NR	4.30E+01
CADMIUM	PPB	2.00E+00	1.00E+01			4.00E+00
				NR	NR	3.00E+00
CHROMUM	PPB	1.00E+01	5.00E+01	8.05E+02*	6.83E+02*	5.04E+02*
				NR	NR	4.70E+02*
				NR	NR	5.13E+02*
				NR	NR	4.86E+02*
SODIUM	PPB	1.00E+02		2.25E+05	1.93E+05	8.20E+03
				NR	NR	8.71E+03
				NR	NR	8.40E+03
				NR	NR	8.37E+03
NICKEL	PPB	1.00E+01		2.20E+01	1.80E+01	
COPPER	PPB	1.00E+01	(1.30E+03)	2.70E+01		
VANADUM	PPB	5.00E+00		9.00E+00		5.00E+00
POTASUM	PPB	1.00E+02		3.95E+03	6.35E+03	4.00E+03
				NR	NR	4.21E+03
				NR	NR	4.12E+03
				NR	NR	4.09E+03
IRON	PPB	5.00E+01		1.43E+02	4.57E+02	2.07E+02
				NR	NR	6.60E+01
				NR	NR	3.06E+02
				NR	NR	6.00E+01
ARSENIC	PPB	5.00E+00	5.00E+01			7.77E+00
LEADGF	PPB	5.00E+00	2.00E+01		5.81E+00	
ILFORM	PPB	1.00E+01		3.00E+01		
TOC	PPB	1.00E+03		5.73E+03	4.49E+03	1.03E+03
				NR	NR	1.20E+03
NITRATE	PPB	5.00E+02	4.50E+04	4.27E+05*	4.44E+05*	2.39E+04
				NR	NR	2.59E+04
				NR	NR	2.60E+04
				NR	NR	2.30E+04
SULFATE	PPB	5.00E+02		7.64E+04	8.11E+04	4.13E+04
				NR	NR	4.45E+04
				NR	NR	4.53E+04
				NR	NR	4.00E+04

* - VALUE EXCEEDS PRIMARY DRINKING WATER STANDARD.
% - VALUE EXCEEDS PROPOSED PRIMARY DRINKING WATER STANDARD.
\$ - VALUE EXCEEDS SCREENING LEVEL FOR FURTHER INVESTIGATION.
@ - DETECTION LIMIT WAS NOT AVAILABLE FOR COMPARISON
NR - ANALYSIS NOT REQUESTED
(+)- WELL SAMPLED IN QUADRUPLICATE; ONLY VALUES >DETECTION LIMIT ARE SHOWN
WATER STANDARD(S) IN PARENTHESES ARE PROPOSED ONLY

DRAFT

MONTHLY SUMMARY OF RESULTS ABOVE DETECTION LIMIT FOR AUG 1985
INPUT FILE:UNC_D.WELLS

DOWN GRADIENT WELLS

CONSTITUENT NAME	UNITS	DETECTION LIMIT	WATER STANDARD	1-H4-3	1-H4-4	1-H4-5(+)
CHLORID	PPB	5.00E+02		4.57E+03	5.19E+03	4.30E+03
				NR	NR	3.89E+03
				NR	NR	3.83E+03
				NR	NR	3.69E+03
AMMONIU	PPB	5.00E+01		1.30E+02	1.30E+02	1.90E+02
				NR	NR	1.30E+02
				NR	NR	1.30E+02
				NR	NR	1.14E+02

DRAFT

* - VALUE EXCEEDS PRIMARY DRINKING WATER STANDARD.
\# - VALUE EXCEEDS PROPOSED PRIMARY DRINKING WATER STANDARD.
\$ - VALUE EXCEEDS SCREENING LEVEL FOR FURTHER INVESTIGATION.
@ - DETECTION LIMIT WAS NOT AVAILABLE FOR COMPARISON
NR - ANALYSIS NOT REQUESTED
(+)- WELL SAMPLED IN QUADRUPLICATE; ONLY VALUES >DETECTION LIMIT ARE SHOWN
WATER STANDARD(S) IN PARENTHESES ARE PROPOSED ONLY

MONTHLY SUMMARY OF RESULTS ABOVE DE .ON LIMIT FOR AUG 1985

INPUT FILE:WHC_U.WELLS

UP GRADIENT WELLS

CONSTITUENT NAME	UNITS	DETECTION LIMIT	WATER STANDARD	3-8-2	6-S19-E13
BETA	PCI/L	8.00E+00	5.00E+01	8.71E+00	1.08E+01
ZINC	PPB	5.00E+00		NR	3.90E+01
CALCIUM	PPB	5.00E+01		NR	4.43E+04
BARIUM	PPB	6.00E+00	1.00E+03	3.60E+01	4.30E+01
CADMIUM	PPB	2.00E+00	1.00E+01	3.00E+00	
SODIUM	PPB	1.00E+02		1.87E+04	2.25E+04
VANADUM	PPB	5.00E+00		1.30E+01	1.90E+01
POTASUM	PPB	1.00E+02		5.46E+03	6.39E+03
IRON	PPB	5.00E+01		1.08E+02	8.30E+01
NITRATE	PPB	5.00E+02	4.50E+04	1.85E+04	1.76E+04
SULFATE	PPB	5.00E+02		2.72E+04	4.91E+04
CHLORID	PPB	5.00E+02		9.80E+03	1.51E+04
MONIU	PPB	5.00E+01		1.55E+02	1.55E+02

DRAFT

* - VALUE EXCEEDS PRIMARY DRINKING WATER STANDARD.
\# - VALUE EXCEEDS PROPOSED PRIMARY DRINKING WATER STANDARD.
% - VALUE EXCEEDS SCREENING LEVEL FOR FURTHER INVESTIGATION.
@ - DETECTION LIMIT WAS NOT AVAILABLE FOR COMPARISON
NR - ANALYSIS NOT REQUESTED
WATER STANDARD(S) IN PARENTHESES ARE PROPOSED ONLY

MONTHLY SUMMARY OF RESULTS ABOVE DETECTION LIMIT FOR AUG 1985
INPUT FILE:WHC_D.WELLS

DOWN GRADIENT WELLS

CONSTITUENT NAME	UNITS	DETECTION LIMIT	WATER STANDARD	3-1-1(+)	3-1-2(+)	3-1-3	3-1-4	3-1-5(0)	3-1-6
BETA	PCI/L	8.00E+00	5.00E+01	8.90E+00	1.14E+01	4.77E+01	1.04E+01	1.72E+01	
				1.22E+01	8.60E+00	NR	NR	1.57E+01	NR
				1.01E+01	9.23E+00	NR	NR	1.66E+01	NR
					8.47E+00	NR	NR	NR	NR
CONDUCT	UMHO			2.30E+02@	2.41E+02@	2.10E+02@	VM	3.22E+02@	VM
PH				7.40E+00@	7.10E+00@	6.60E+00@	VM	6.30E+00@	VM
LOALPHA	PCI/L	4.00E+00	1.50E+01	1.22E+01	6.17E+00	2.37E+01%	5.99E+00	7.96E+00	9.29E+00
				1.39E+01	5.28E+00	NR	NR	8.33E+00	NR
				1.43E+01	4.24E+00	NR	NR		NR
				1.69E+01%	8.01E+00	NR	NR	NR	NR
ZINC	PPB	5.00E+00		NR	NR	NR	NR	1.60E+01	NR
				NR	NR	NR	NR	3.10E+01	NR
CALCIUM	PPB	5.00E+01		NR	NR	NR	NR	3.19E+04	NR
				NR	NR	NR	NR	2.89E+04	NR
				NR	NR	NR	NR	3.00E+04	NR
BARIUM	PPB	6.00E+00	1.00E+03	2.70E+01	2.00E+01	1.40E+01	1.60E+01	3.10E+01	1.60E+01
				2.80E+01	1.90E+01	NR	NR	3.20E+01	NR
				2.90E+01	2.10E+01	NR	NR	3.30E+01	NR
				2.90E+01	2.10E+01	NR	NR	NR	NR
CADMIUM	PPB	2.00E+00	1.00E+01	3.00E+00	3.00E+00		5.00E+00		3.00E+00
CHROMUM	PPB	1.00E+01	5.00E+01	1.10E+01		1.40E+01			
SODIUM	PPB	1.00E+02		1.09E+04	1.14E+04	1.34E+04	7.90E+03	1.26E+04	1.39E+03
				1.11E+04	1.09E+04	NR	NR	1.25E+04	NR
				1.14E+04	1.13E+04	NR	NR	1.27E+04	NR
				1.14E+04	1.13E+04	NR	NR	NR	NR
NICKEL	PPB	1.00E+01						5.00E+01	
COPPER	PPB	1.00E+01	(1.30E+03)	1.00E+01					
				1.10E+01		NR	NR		NR
				2.00E+01		NR	NR		NR
				1.90E+01		NR	NR	NR	NR
VANADUM	PPB	5.00E+00		5.00E+00	7.00E+00		7.00E+00	5.00E+00	
					7.00E+00	NR	NR	8.00E+00	NR
					6.00E+00	NR	NR	8.00E+00	NR
MANGESE	PPB	5.00E+00		6.00E+00				6.00E+00	
					NR	NR	NR	5.00E+00	NR
POTASUM	PPB	1.00E+02		2.24E+03	2.88E+03	2.44E+03	2.64E+03	3.68E+03	2.65E+03
				2.37E+03	2.73E+03	NR	NR	3.39E+03	NR
				2.48E+03	2.79E+03	NR	NR	3.47E+03	NR
				2.44E+03	2.81E+03	NR	NR	NR	NR
IRON	PPB	5.00E+01		5.40E+01	5.00E+01	6.70E+01	9.70E+01	4.33E+02	6.20E+01
				5.80E+01		NR	NR	2.67E+02	NR
				6.10E+01		NR	NR	2.81E+02	NR
ARSENIC	PPB	5.00E+00	5.00E+01			7.52E+00			
THIOURA	PPB	2.00E+02			9.66E+02				1.09E+03
LEADGF	PPB	5.00E+00	2.00E+01		7.44E+00				

* - VALUE EXCEEDS PRIMARY DRINKING WATER STANDARD.
\# - VALUE EXCEEDS PROPOSED PRIMARY DRINKING WATER STANDARD.
% - VALUE EXCEEDS SCREENING LEVEL FOR FURTHER INVESTIGATION.
@ - DETECTION LIMIT WAS NOT AVAILABLE FOR COMPARISON
NR - ANALYSIS NOT REQUESTED
VM - VALUE MISSING DUE TO PROBLEMS IN ANALYSIS OR COLLECTION
(+)- WELL SAMPLED IN QUADRUPLICATE; ONLY VALUES >DETECTION LIMIT ARE SHOWN

DRAFT

MONTHLY SUMMARY OF RESULTS ABOVE DETECTION LIMIT FOR AUG 1985
INPUT FILE:WHC_D.WELLS

DOWN GRADIENT WELLS

CONSTITUENT NAME	UNITS	DETECTION LIMIT	WATER STANDARD	3-1-1(+)	3-1-2(+)	3-1-3	3-1-4	3-1-5(+)	3-1-6
PERCENE	PPB	1.00E+01				1.00E+01		1.50E+01	
						NR	NR	1.40E+01	NR
						NR	NR	1.60E+01	NR
CHLFORM	PPB	1.00E+01		3.30E+01	1.60E+01	2.50E+01		2.20E+01	2.50E+01
				2.40E+01	2.00E+01	NR	NR	2.20E+01	NR
				2.70E+01	2.00E+01	NR	NR	2.20E+01	NR
				2.50E+01	1.80E+01	NR	NR	NR	NR
METHYCH	PPB	1.00E+01							2.00E+01$
BIS2EPH	PPB	1.00E+01			5.00E+01				
TOC	PPB	1.00E+03				1.33E+03			
CYANIDE	PPB	1.00E+01		1.10E+01					
ITRATE	PPB	5.00E+02	4.50E+04	1.96E+04	1.77E+04	1.42E+04	4.00E+03	3.70E+03	3.60E+03
				1.65E+04	1.68E+04	NR	NR	3.40E+03	NR
				1.62E+04	1.54E+04	NR	NR	2.90E+03	NR
				1.60E+04	1.76E+04	NR	NR	NR	NR
SULFATE	PPB	5.00E+02		1.78E+04	1.87E+04	1.54E+04	1.14E+04	1.64E+04	1.26E+04
				1.46E+04	1.80E+04	NR	NR	1.55E+04	NR
				1.47E+04	1.65E+04	NR	NR	1.37E+04	NR
				1.46E+04	1.92E+04	NR	NR	NR	NR
FLUORID	PPB	5.00E+02	1.40E+03	6.90E+02		7.50E+02		1.87E+03*	
				5.90E+02	NR	NR	NR	7.40E+02	NR
				5.90E+02	NR	NR	NR	6.40E+02	NR
				5.90E+02	NR	NR	NR	NR	NR
CHLORID	PPB	5.00E+02		1.48E+04	1.17E+04	1.22E+04	6.40E+03	5.04E+04	6.60E+03
				1.26E+04	1.10E+04	NR	NR	4.72E+04	NR
				1.25E+04	9.70E+03	NR	NR	4.36E+04	NR
				1.21E+04	1.15E+04	NR	NR	NR	NR
AMMONIU	PPB	5.00E+01		1.26E+02	1.40E+02	1.20E+02	1.70E+02	1.35E+02	1.50E+02
				1.24E+02	1.35E+02	NR	NR	1.20E+02	NR
				1.40E+02	1.45E+02	NR	NR	1.35E+02	NR
				1.35E+02	1.45E+02	NR	NR	NR	NR

DRAFT

* - VALUE EXCEEDS PRIMARY DRINKING WATER STANDARD.
\# - VALUE EXCEEDS PROPOSED PRIMARY DRINKING WATER STANDARD.
% - VALUE EXCEEDS SCREENING LEVEL FOR FURTHER INVESTIGATION.
@ - DETECTION LIMIT WAS NOT AVAILABLE FOR COMPARISON
$ - VALUE MAY BE AFFECTED BY PUMP CONTAMINATION
NR - ANALYSIS NOT REQUESTED
(+)- WELL SAMPLED IN QUADRUPLICATE. ONLY VALUES >DETECTION LIMIT ARE SHOWN

9 3 1 2 7 6 0 2 0 9 2

MONTHLY SUMMARY OF RESULTS ABOVE L CTION LIMIT FOR AUG 1985

INPUT FILE:WHC_D.WELLS

DOWN GRADIENT WELLS

CONSTITUENT NAME	UNITS	DETECTION LIMIT	WATER STANDARD	3-2-1	3-3-7	3-3-10(+)	3-4-1	3-4-7(+)	6-S30E15A
COLIFRM	MPN	3.00E+00	>DL	4.00E+00*					
BETA	PCI/L	8.00E+00	5.00E+01	1.39E+01		1.04E+01	1.82E+01	1.62E+01	8.84E+00
				NR	NR	1.33E+01	NR	6.06E+01%	NR
				NR	NR	1.09E+01	NR	3.01E+01	NR
				NR	NR	1.12E+01	NR	1.21E+01	NR
CONDUCT	UMHO			2.58E+02@	VM	2.70E+02@	3.25E+02@	3.93E+02@	5.66E+02@
PH				6.70E+00@	7.50E+00@	6.10E+00@	7.00E+00@	7.20E+00@	7.40E+00@
LOALPHA	PCI/L	4.00E+00	1.50E+01	6.20E+00	5.81E+00	1.88E+01%	1.14E+01	2.25E+01%	
				NR	NR	1.39E+01	NR	3.42E+01%	NR
				NR	NR	2.16E+01%	NR	3.10E+01%	NR
				NR	NR	1.51E+01%	NR	2.07E+01%	NR
ARIUM	PPB	6.00E+00	1.00E+03	4.30E+01	3.60E+01	4.00E+01	3.00E+01	4.20E+01	6.70E+01
				NR	NR	3.90E+01	NR	4.00E+01	NR
				NR	NR	4.00E+01	NR	4.20E+01	NR
				NR	NR	3.90E+01	NR	4.20E+01	NR
CADMIUM	PPB	2.00E+00	1.00E+01	4.00E+00	5.00E+00	3.00E+00			
				NR	NR	2.00E+00	NR	NR	NR
CHROMUM	PPB	1.00E+01	5.00E+01				1.50E+01	1.30E+01	
SODIUM	PPB	1.00E+02		3.89E+03	1.98E+04	1.08E+04	1.72E+04	1.89E+04	1.55E+04
				NR	NR	1.13E+04	NR	1.78E+04	NR
				NR	NR	1.15E+04	NR	1.87E+04	NR
				NR	NR	1.14E+04	NR	1.91E+04	NR
NICKEL	PPB	1.00E+01				1.10E+01		4.00E+01	
VANADUM	PPB	5.00E+00			7.00E+00	5.00E+00	1.00E+01	1.00E+01	
				NR	NR		NR	9.00E+00	NR
				NR	NR		NR	1.00E+01	NR
				NR	NR		NR	9.00E+00	NR
MANGESE	PPB	5.00E+00				6.00E+00			
				NR	NR	6.00E+00	NR		NR
				NR	NR	6.00E+00	NR		NR
				NR	NR	5.00E+00	NR		NR
OTASUM	PPB	1.00E+02		3.56E+03	5.15E+03	3.09E+03	4.67E+03	4.38E+03	6.99E+03
				NR	NR	3.16E+03	NR	4.18E+03	NR
				NR	NR	3.23E+03	NR	4.42E+03	NR
				NR	NR	3.21E+03	NR	4.37E+03	NR
IRON	PPB	5.00E+01		1.24E+02	3.80E+02	2.06E+02	6.60E+01	7.60E+01	
				NR	NR	1.73E+02	NR	6.40E+01	NR
				NR	NR	1.91E+02	NR		NR
				NR	NR	1.61E+02	NR		NR
ARSENIC	PPB	5.00E+00	5.00E+01				6.02E+00	5.27E+00	
MERCURY	PPB	1.00E-01	2.00E+00			2.80E-01			
PERCENE	PPB	1.00E+01		1.80E+01	1.50E+01				
CHLFORM	PPB	1.00E+01		1.30E+01	2.70E+01				
BIS2EPH	PPB	1.00E+01				5.00E+01			
				NR	NR	1.80E+01	NR	NR	NR

* - VALUE EXCEEDS PRIMARY DRINKING WATER STANDARD.
\# - VALUE EXCEEDS PROPOSED PRIMARY DRINKING WATER STANDARD.
% - VALUE EXCEEDS SCREENING LEVEL FOR FURTHER INVESTIGATION.
@ - DETECTION LIMIT WAS NOT AVAILABLE FOR COMPARISON
NR - ANALYSIS NOT REQUESTED
VM - VALUE MISSING DUE TO PROBLEMS IN ANALYSIS OR COLLECTION
(+)- WELL SAMPLED IN QUADRUPLICATE; ONLY VALUES >DETECTION LIMIT ARE SHOWN

DRAFT

MONTHLY SUMMARY OF RESULTS ABOVE DETECTION LIMIT FOR AUG 1985
INPUT FILE:WHC_D.WELLS

DOWN GRADIENT WELLS

CONSTITUENT NAME	UNITS	DETECTION LIMIT	WATER STANDARD	3-2-1	3-3-7	3-3-10(+)	3-4-1	3-4-7(+)	6-S30E15A
TOC	PPB	1.00E+03							1.65E+03
CYANIDE	PPB	1.00E+01				1.20E+01			
NITRATE	PPB	5.00E+02	4.50E+04	1.89E+04	1.13E+04	2.34E+04	1.34E+04	1.55E+04	1.28E+04
				NR	NR	1.92E+04	NR	1.87E+04	NR
				NR	NR	1.89E+04	NR	1.84E+04	NR
				NR	NR	2.06E+04	NR	1.69E+04	NR
SULFATE	PPB	5.00E+02		1.62E+04	3.50E+04	2.23E+04	3.27E+04	3.14E+04	1.51E+04
				NR	NR	1.90E+04	NR	3.86E+04	NR
				NR	NR	1.91E+04	NR	3.80E+04	NR
				NR	NR	2.04E+04	NR	3.49E+04	NR
FLUORID	PPB	5.00E+02	1.40E+03				6.30E+02	6.80E+02	
				NR	NR		NR	6.50E+02	NR
				NR	NR		NR	6.10E+02	NR
CHLORID	PPB	5.00E+02		1.22E+04	1.32E+04	1.23E+04	1.15E+04	1.29E+04	3.73E+03
				NR	NR	1.00E+04	NR	1.58E+04	NR
				NR	NR	1.00E+04	NR	1.56E+04	NR
				NR	NR	1.10E+04	NR	1.42E+04	NR
AMMONIU	PPB	5.00E+01		1.30E+02	1.24E+02	1.30E+02	1.24E+02	1.75E+02	1.55E+02
				NR	NR	1.80E+02	NR	1.70E+02	NR
				NR	NR	1.80E+02	NR	1.70E+02	NR
				NR	NR	1.75E+02	NR	1.80E+02	NR

DRAFT

* - VALUE EXCEEDS PRIMARY DRINKING WATER STANDARD.
\# - VALUE EXCEEDS PROPOSED PRIMARY DRINKING WATER STANDARD.
% - VALUE EXCEEDS SCREENING LEVEL FOR FURTHER INVESTIGATION.
@ - DETECTION LIMIT WAS NOT AVAILABLE FOR COMPARISON
NR - ANALYSIS NOT REQUESTED
(+)- WELL SAMPLED IN QUADRUPLICATE; ONLY VALUES >DETECTION LIMIT ARE SHOWN
WATER STANDARD(S) IN PARENTHESES ARE PROPOSED ONLY

MONTHLY SUMMARY OF RESULTS ABOVE . .CTION LIMIT FOR AUG 1985
INPUT FILE:WHC_D.WELLS

DOWN GRADIENT WELLS

CONSTITUENT NAME	UNITS	DETECTION LIMIT	WATER STANDARD	3-T-1	3-T-2(1)
BETA	PCI/L	8.00E+00	5.00E+01	3.17E+01	NR
CONDUCT	UMHO			2.02E+02@	NR
PH				6.60E+00@	NR
LOALPHA	PCI/L	4.00E+00	1.50E+01	2.01E+01%	NR
BARIUM	PPB	6.00E+00	1.00E+03	1.50E+01	NR
CHROMUM	PPB	1.00E+01	5.00E+01	1.30E+01	NR
SODIUM	PPB	1.00E+02		1.44E+04	NR
POTASUM	PPB	1.00E+02		2.56E+03	NR
IRON	PPB	5.00E+01		5.60E+01	NR
PERCENE	PPB	1.00E+01		3.90E+01	NR
NITRATE	PPB	5.00E+02	4.50E+04	1.64E+04	NR
SULFATE	PPB	5.00E+02		1.71E+04	NR
FLUORID	PPB	5.00E+02	1.40E+03	8.10E+02	NR
CHLORID	PPB	5.00E+02		1.42E+04	NR
AMMONIU	PPB	5.00E+01		1.10E+02	NR

DRAFT

* - VALUE EXCEEDS PRIMARY DRINKING WATER STANDARD.
\# - VALUE EXCEEDS PROPOSED PRIMARY DRINKING WATER STANDARD.
% - VALUE EXCEEDS SCREENING LEVEL FOR FURTHER INVESTIGATION.
@ - DETECTION LIMIT WAS NOT AVAILABLE FOR COMPARISON
NR - ANALYSIS NOT REQUESTED
(1)- WELL NOT YET DRILLED
WATER STANDARD(S) IN PARENTHESES ARE PROPOSED ONLY

MONTHLY SUMMARY OF RESULTS ABOVE DETECTION LIMIT FOR SEP 1985

INPUT FILE:UNC_U.WELLS

UP GRADIENT WELLS

CONSTITUENT NAME	UNITS	DETECTION LIMIT	WATER STANDARD	1-H3-1	1-H4-6
BETA	PCI/L	8.00E+00	5.00E+01	1.44E+01	
CONDUCT	UMHO			5.93E+02@	3.71E+02@
PH				7.90E+00@	7.80E+00@
STRONUM	PPB	3.00E+02		4.49E+02	NR
CALCIUM	PPB	5.00E+01		6.93E+04	NR
BARIUM	PPB	6.00E+00	1.00E+03	4.80E+01	3.10E+01
CHROMUM	PPB	1.00E+01	5.00E+01	3.50E+01	3.10E+01
SODIUM	PPB	1.00E+02		1.95E+04	1.73E+04
VANADUM	PPB	5.00E+00		1.40E+01	1.00E+01
MANGESE	PPB	5.00E+00			4.80E+01
POTASUM	PPB	1.00E+02		5.76E+03	4.88E+03
IRON	PPB	5.00E+01		5.50E+01	2.86E+02
HLFORM	PPB	1.00E+01		1.10E+01	2.30E+01
TOC	PPB	1.00E+03		1.10E+03	
NITRATE	PPB	5.00E+02	4.50E+04	6.46E+04*	1.88E+04
SULFATE	PPB	5.00E+02		6.88E+04	4.38E+04
CHLORID	PPB	5.00E+02		8.57E+03	5.17E+03

DRAFT

* - VALUE EXCEEDS PRIMARY DRINKING WATER STANDARD
\# - VALUE EXCEEDS PROPOSED PRIMARY DRINKING WATER STANDARD
% - VALUE EXCEEDS SCREENING LEVEL FOR FURTHER INVESTIGATION
@ - DETECTION LIMIT WAS NOT AVAILABLE FOR COMPARISON
NR - ANALYSIS NOT REQUESTED
WATER STANDARD(S) IN PARENTHESES ARE PROPOSED ONLY

MONTHLY SUMMARY OF RESULTS ABOVE DETECTION LIMIT FOR SEP 1985

INPUT FILE:UNC_D.WELLS

DOWN GRADIENT WELLS

CONSTITUENT NAME	UNITS	DETECTION LIMIT	WATER STANDARD	1-H4-3	1-H4-4	1-H4-5
COLIFRM	MPN	3.00E+00	>DL		4.00E+00*	
BETA	PCI/L	8.00E+00	5.00E+01	5.10E+02%	2.57E+02%	
CONDUCT	UMHO			VM	VM	VM
PH				VM	VM	VM
LOALPHA	PCI/L	4.00E+00	1.50E+01	1.74E+02%	6.59E+01%	
CALCIUM	PPB	5.00E+01		1.63E+04	NR	NR
BARIUM	PPB	6.00E+00	1.00E+03	2.90E+01	7.00E+01	4.60E+01
CADMIUM	PPB	2.00E+00	1.00E+01		4.00E+00	
CHROMUM	PPB	1.00E+01	5.00E+01	7.88E+02*	6.94E+02*	5.45E+02*
SODIUM	PPB	1.00E+02		2.26E+05	1.68E+05	8.90E+03
NICKEL	PPB	1.00E+01		2.10E+01	1.60E+01	
COPPER	PPB	1.00E+01	(1.30E+03)	3.70E+01		
/ANADUM	PPB	5.00E+00		9.00E+00	1.00E+01	8.00E+00
MANGESE	PPB	5.00E+00		6.00E+00	7.00E+00	
POTASUM	PPB	1.00E+02		4.19E+03	5.59E+03	3.92E+03
IRON	PPB	5.00E+01		8.00E+01	2.01E+03	2.74E+02
CHLFORM	PPB	1.00E+01		2.80E+01	2.70E+01	2.50E+01
PERCENE	PPB	1.00E+01		1.10E+01		
TOC	PPB	1.00E+03		1.61E+03	9.21E+03	1.06E+03
NITRATE	PPB	5.00E+02	4.50E+04	4.18E+05*	3.78E+05*	2.10E+04
SULFATE	PPB	5.00E+02		7.24E+04	6.69E+04	4.02E+04
CHLORID	PPB	5.00E+02		5.05E+03	5.03E+03	4.16E+03

DRAFT

* - VALUE EXCEEDS PRIMARY DRINKING WATER STANDARD
\# - VALUE EXCEEDS PROPOSED PRIMARY DRINKING WATER STANDARD
% - VALUE EXCEEDS SCREENING LEVEL FOR FURTHER INVESTIGATION
@ - DETECTION LIMIT WAS NOT AVAILABLE FOR COMPARISON
NR - ANALYSIS NOT REQUESTED
VM - VALUE MISSING DUE TO PROBLEMS IN COLLECTION OR ANALYSIS

MONTHLY SUMMARY OF RESULTS ABOVE .ECTION LIMIT FOR SEP 1985

INPUT FILE:WHC_U.WELLS

UP GRADIENT WELLS

CONSTITUENT NAME	UNITS	DETECTION LIMIT	WATER STANDARD	3-8-2	6-S19-E13
BETA	PCI/L	8.00E+00	5.00E+01	8.31E+00	1.21E+01
CONDUCT	UMHO			3.53E+02@	3.78E+02@
PH				7.60E+00@	6.70E+00@
LOALPHA	PCI/L	4.00E+00	1.50E+01		6.47E+00
ZINC	PPB	5.00E+00		NR	6.00E+00
CALCIUM	PPB	5.00E+01		NR	4.48E+04
BARIUM	PPB	6.00E+00	1.00E+03	3.80E+01	4.50E+01
SODIUM	PPB	1.00E+02		1.88E+04	2.27E+04
NICKEL	PPB	1.00E+01		1.70E+01	
VANADUM	PPB	5.00E+00		1.40E+01	1.20E+01
POTASUM	PPB	1.00E+02		5.35E+03	6.44E+03
LEADGF	PPB	5.00E+00	5.00E+01		7.31E+00
TOC	PPB	1.00E+03			1.16E+03
NITRATE	PPB	5.00E+02	4.50E+04	1.92E+04	1.88E+04
SULFATE	PPB	5.00E+02		2.94E+04	5.17E+04
CHLORID	PPB	5.00E+02		9.05E+03	1.65E+04

DRAFT

* - VALUE EXCEEDS PRIMARY DRINKING WATER STANDARD
\# - VALUE EXCEEDS PROPOSED PRIMARY DRINKING WATER STANDARD
\$ - VALUE EXCEEDS SCREENING LEVEL FOR FURTHER INVESTIGATION
@ - DETECTION LIMIT WAS NOT AVAILABLE FOR COMPARISON
NR - ANALYSIS NOT REQUESTED
WATER STANDARD(S) IN PARENTHESES ARE PROPOSED ONLY

MONTHLY SUMMARY OF RESULTS ABOVE DETECTION LIMIT FOR SEP 1985

INPUT FILE:WHC_D.WELLS

DOWN GRADIENT WELLS

CONSTITUENT NAME	UNITS	DETECTION LIMIT	WATER STANDARD	3-1-1	3-1-2	3-1-3	3-1-4	3-1-5	3-1-6
BETA	PCI/L	8.00E+00	5.00E+01	1.43E+01	1.09E+01	3.99E+01	1.20E+01	1.70E+01	9.08E+00
CONDUCT	UMHO			2.28E+02@	2.04E+02@	2.30E+02@	1.94E+02@	2.29E+02@	1.67E+02@
PH				7.40E+00@	7.10E+00@	6.60E+00@	5.90E+00@	7.00E+00@	5.40E+00@
LOALPHA	PCI/L	4.00E+00	1.50E+01	1.72E+01%	9.77E+00	2.93E+01%	4.48E+00	7.04E+00	5.69E+00
CALCIUM	PPB	5.00E+01						2.08E+04	
BARIUM	PPB	6.00E+00	1.00E+03	3.30E+01	1.90E+01	2.60E+01	2.00E+01	2.30E+01	2.00E+01
CADMIUM	PPB	2.00E+00	1.00E+01			2.00E+00			
CHROMUM	PPB	1.00E+01	5.00E+01			2.40E+01	1.10E+01		
SODIUM	PPB	1.00E+02		1.20E+04	1.18E+04	1.46E+04	7.97E+03	1.21E+04	7.22E+03
NICKEL	PPB	1.00E+01		1.40E+01	1.40E+01			1.50E+01	
COPPER	PPB	1.00E+01	(1.30E+03)			1.50E+01			
VANADUM	PPB	5.00E+00				1.00E+01	5.00E+00		
MANGESE	PPB	5.00E+00				1.10E+01	6.00E+00		
POTASUM	PPB	1.00E+02		2.25E+03	2.91E+03	3.01E+03	2.69E+03	2.80E+03	2.62E+03
IRON	PPB	5.00E+01		7.70E+01		1.60E+02	1.79E+02		6.30E+01
PERCENE	PPB	1.00E+01				1.40E+01			
CHLFORM	PPB	1.00E+01		2.30E+01	2.30E+01	2.30E+01	2.50E+01	2.00E+01	2.10E+01
METHYCH	PPB	1.00E+01						1.60E+03$	
TOX	PPB	1.00E+02						2.31E+03	
TOC	PPB	1.00E+03					1.31E+03		1.34E+03
NITRATE	PPB	5.00E+02	4.50E+04	1.93E+04	1.59E+04	2.38E+04	2.92E+04	2.39E+04	2.16E+04
SULFATE	PPB	5.00E+02		1.40E+04	1.48E+04	1.54E+04	1.37E+04	1.49E+04	1.50E+04
FLUORID	PPB	5.00E+02	1.40E+03			5.55E+02		5.09E+02	
CHLORID	PPB	5.00E+02		1.55E+04	1.10E+04	1.38E+04	8.33E+03	1.30E+04	6.96E+03
PHOSPHA	PPB	1.00E+03				3.24E+03			

DRAFT

* - VALUE EXCEEDS PRIMARY DRINKING WATER STANDARD
\# - VALUE EXCEEDS PROPOSED PRIMARY DRINKING WATER STANDARD
% - VALUE EXCEEDS SCREENING LEVEL FOR FURTHER INVESTIGATION
@ - DETECTION LIMIT WAS NOT AVAILABLE FOR COMPARISON
$ - VALUE MAY BE AFFECTED BY PUMP CONTAMINATION
WATER STANDARD(S) IN PARENTHESES ARE PROPOSED ONLY

MONTHLY SUMMARY OF RESULTS ABOVE D. TION LIMIT FOR SEP 1985

INPUT FILE:WHC_D.WELLS

DOWN GRADIENT WELLS

CONSTITUENT NAME	UNITS	DETECTION LIMIT	WATER STANDARD	3-2-1	3-3-7	3-3-10	3-4-1	3-4-7	6-S30E15A
COLIFRM	MPN	3.00E+00	>DL	4.00E+00*					
BETA	PCI/L	8.00E+00	5.00E+01	1.62E+01	1.57E+01	1.55E+01	1.24E+01	2.50E+01	1.35E+01
CONDUCT	UMHO			2.17E+02@	2.69E+02@	2.68E+02@	3.30E+02@	3.78E+02@	4.66E+02@
PH				5.40E+00@	7.10E+00@	7.10E+00@	7.20E+00@	7.90E+00@	6.10E+00@
LOALPHA	PCI/L	4.00E+00	1.50E+01	1.01E+01	1.92E+01%	2.47E+01%	1.39E+01	4.04E+01%	5.60E+00
BARIUM	PPB	6.00E+00	1.00E+03	4.40E+01	7.80E+01	4.10E+01	3.30E+01	3.80E+01	7.40E+01
CADMIUM	PPB	2.00E+00	1.00E+01						7.00E+00
CHROMUM	PPB	1.00E+01	5.00E+01						1.70E+01
SODIUM	PPB	1.00E+02		1.35E+04	1.11E+04	1.21E+04	1.63E+04	1.83E+04	1.47E+04
NICKEL	PPB	1.00E+01			1.40E+01	2.20E+01			
COPPER	PPB	1.00E+01	(1.30E+03)						1.30E+01
VANADUM	PPB	5.00E+00		5.00E+00	5.00E+00		1.20E+01	8.00E+00	1.70E+01
MANGESE	PPB	5.00E+00		1.70E+01			8.00E+00		9.00E+00
POTASUM	PPB	1.00E+02		3.55E+03	3.35E+03	3.31E+03	4.55E+03	4.44E+03	6.94E+03
IRON	PPB	5.00E+01		2.32E+02	1.10E+02	1.32E+02	3.67E+02		
ARSENIC	PPB	5.00E+00	5.00E+01		4.76E+01				
LEADGF	PPB	5.00E+00	5.00E+01				6.43E+00		
1,1,2-T	PPB	1.00E+01					2.30E+01$		
CHLFORM	PPB	1.00E+01		1.40E+01					
TOC	PPB	1.00E+03				1.10E+03			1.37E+03
NITRATE	PPB	5.00E+02	4.50E+04	1.61E+04	2.74E+04	1.64E+04	1.13E+04	1.62E+04	1.35E+04
SULFATE	PPB	5.00E+02		1.43E+04	1.98E+04	1.72E+04	2.41E+04	4.70E+04	1.67E+04
CHLORID	PPB	5.00E+02		1.15E+04	9.71E+03	9.06E+03	9.34E+03	1.41E+04	6.36E+03

DRAFT

* - VALUE EXCEEDS PRIMARY DRINKING WATER STANDARD
\# - VALUE EXCEEDS PROPOSED PRIMARY DRINKING WATER STANDARD
% - VALUE EXCEEDS SCREENING LEVEL FOR FURTHER INVESTIGATION
@ - DETECTION LIMIT WAS NOT AVAILABLE FOR COMPARISON
$ - VALUE MAY BE AFFECTED BY PUMP CONTAMINATION
WATER STANDARD(S) IN PARENTHESES ARE PROPOSED ONLY

MONTHLY SUMMARY OF RESULTS ABOVE DETECTION LIMIT FOR SEP 1985
INPUT FILE:WHC_D.WELLS

DOWN GRADIENT WELLS

CONSTITUENT NAME	UNITS	DETECTION LIMIT	WATER STANDARD	3-T-1	3-T-2(1)
BETA	PCI/L	8.00E+00	5.00E+01	3.45E+01	
CONDUCT	UMHO			2.32E+02@	
PH				6.70E+00@	
LOALPHA	PCI/L	4.00E+00	1.50E+01	2.23E+01%	
BARIUM	PPB	6.00E+00	1.00E+03	1.90E+01	
CHROMUM	PPB	1.00E+01	5.00E+01	1.30E+01	
SODIUM	PPB	1.00E+02		1.42E+04	
VANADUM	PPB	5.00E+00		5.00E+00	
POTASUM	PPB	1.00E+02		2.82E+03	
IRON	PPB	5.00E+01		1.25E+02	
PERCENE	PPB	1.00E+01		2.60E+01	
CHLFORM	PPB	1.00E+01		2.20E+01	
OC	PPB	1.00E+03		1.23E+03	
NITRATE	PPB	5.00E+02	4.50E+04	1.55E+04	
SULFATE	PPB	5.00E+02		1.38E+04	
FLUORID	PPB	5.00E+02	1.40E+03	5.39E+02	
CHLORID	PPB	5.00E+02		1.36E+04	

DRAFT

* - VALUE EXCEEDS PRIMARY DRINKING WATER STANDARD
\# - VALUE EXCEEDS PROPOSED PRIMARY DRINKING WATER STANDARD
% - VALUE EXCEEDS SCREENING LEVEL FOR FURTHER INVESTIGATION
@ - DETECTION LIMIT WAS NOT AVAILABLE FOR COMPARISON
WATER STANDARD(S) IN PARENTHESES ARE PROPOSED ONLY
(1) WELL 3-T-2 BEING DRILLED IN SEPT; NOT SAMPLED

MONTHLY SUMMARY OF RESULTS ABOVE . CTION LIMIT FOR OCT 1985
INPUT FILE:UNC_U.WELLS

UP GRADIENT WELLS

CONSTITUENT NAME	UNITS	DETECTION LIMIT	WATER STANDARD	1-H3-1	1-H4-6
BETA	PCI/L	8.00E+00	5.00E+01	1.14E+01	8.93E+00
CONDUCT	UMHO			6.20E+02@	3.50E+02@
PH				8.10E+00@	8.40E+00@
LOALPHA	PCI/L	4.00E+00	1.50E+01	8.03E+00	
STRONUM	PPB	3.00E+02		5.13E+02	
ZINC	PPB	5.00E+00			1.18E+02
CALCIUM	PPB	5.00E+01		8.87E+04	4.88E+04
BARIUM	PPB	6.00E+00	1.00E+03	5.40E+01	3.20E+01
CHROMUM	PPB	1.00E+01	5.00E+01	3.50E+01	
SODIUM	PPB	1.00E+02		2.30E+04	1.84E+04
VANADUM	PPB	5.00E+00		9.00E+00	5.00E+00
MANGESE	PPB	5.00E+00			6.40E+01
OTASUM	PPB	1.00E+02		7.77E+03	5.61E+03
IRON	PPB	5.00E+01			2.75E+02
CHLFORM	PPB	1.00E+01			2.40E+01
TOC	PPB	1.00E+03		2.00E+03	
NITRATE	PPB	5.00E+02	4.50E+04	7.25E+04*	2.29E+04
SULFATE	PPB	5.00E+02		8.62E+04	4.79E+04
CHLORID	PPB	5.00E+02		7.76E+03	5.56E+03

DRAFT

* - VALUE EXCEEDS PRIMARY DRINKING WATER STANDARD
\# - VALUE EXCEEDS PROPOSED PRIMARY DRINKING WATER STANDARD
% - VALUE EXCEEDS SCREENING LEVEL FOR FURTHER INVESTIGATION
@ - DETECTION LIMIT WAS NOT AVAILABLE FOR COMPARISON
WATER STANDARD(S) IN PARENTHESES ARE PROPOSED ONLY

MONTHLY SUMMARY OF RESULTS ABOVE DETECTION LIMIT FOR OCT 1985
INPUT FILE:UNC_D.WELLS

DOWN GRADIENT WELLS

CONSTITUENT NAME	UNITS	DETECTION LIMIT	WATER STANDARD	1-H4-3	1-H4-4	1-H4-5
BETA	PCI/L	8.00E+00	5.00E+01	6.44E+02%	2.89E+02%	
CONDUCT	UMHO			1.65E+03@	8.37E+02@	3.55E+02@
PH				7.50E+00@	7.40E+00@	8.30E+00@
LOALPHA	PCI/L	4.00E+00	1.50E+01	3.08E+02%	7.75E+01%	
ZINC	PPB	5.00E+00			8.90E+01	4.70E+01
CALCIUM	PPB	5.00E+01		5.30E+04	4.19E+04	5.59E+04
BARIUM	PPB	6.00E+00	1.00E+03	6.70E+01	5.70E+01	4.50E+01
CHROMUM	PPB	1.00E+01	5.00E+01	9.11E+02*	5.48E+02*	5.72E+02*
SODIUM	PPB	1.00E+02		3.70E+05	1.68E+05	9.78E+03
NICKEL	PPB	1.00E+01		3.80E+01		
COPPER	PPB	1.00E+01	(1.30E+03)	6.60E+01		
POTASUM	PPB	1.00E+02		8.41E+03	6.22E+03	4.85E+03
IRON	PPB	5.00E+01		9.70E+01	3.00E+02	5.10E+01
CHLFORM	PPB	1.00E+01		2.60E+01	2.40E+01	2.50E+01
BIS2EPH	PPB	1.00E+01		1.30E+01		
TOC	PPB	1.00E+03		8.89E+03	3.98E+03	1.21E+03
NITRATE	PPB	5.00E+02	4.50E+04	1.04E+06*	3.92E+05*	1.93E+04
SULFATE	PPB	5.00E+02		1.10E+05	8.39E+04	4.39E+04
CHLORID	PPB	5.00E+02		5.16E+03	4.54E+03	3.58E+03

DRAFT

* - VALUE EXCEEDS PRIMARY DRINKING WATER STANDARD
\# - VALUE EXCEEDS PROPOSED PRIMARY DRINKING WATER STANDARD
% - VALUE EXCEEDS SCREENING LEVEL FOR FURTHER INVESTIGATION
@ - DETECTION LIMIT WAS NOT AVAILABLE FOR COMPARISON
WATER STANDARD(S) IN PARENTHESES ARE PROPOSED ONLY

MONTHLY SUMMARY OF RESULTS ABOVE DETECTION LIMIT FOR OCT 1985
INPUT FILE:WHC_U.WELLS

UP GRADIENT WELLS

CONSTITUENT NAME	UNITS	DETECTION LIMIT	WATER STANDARD	3-8-2	6-S19-E13
BETA	PCI/L	8.00E+00	5.00E+01		1.19E+01
CONDUCT	UMHO			3.37E+02@	3.78E+02@
PH				7.20E+00@	7.90E+00@
BARIUM	PPB	6.00E+00	1.00E+03	3.80E+01	4.70E+01
SODIUM	PPB	1.00E+02		1.90E+04	2.50E+04
VANADUM	PPB	5.00E+00		1.10E+01	1.20E+01
POTASUM	PPB	1.00E+02		5.34E+03	7.33E+03
IRON	PPB	5.00E+01		1.08E+02	7.30E+01
CHLFORM	PPB	1.00E+01			1.20E+01
TOC	PPB	1.00E+03		1.30E+03	1.46E+03
NITRATE	PPB	5.00E+02	4.50E+04	1.62E+04	1.61E+04
SULFATE	PPB	5.00E+02		2.50E+04	5.30E+04
CHLORID	PPB	5.00E+02		8.17E+03	1.48E+04

DRAFT

* - VALUE EXCEEDS PRIMARY DRINKING WATER STANDARD
\# - VALUE EXCEEDS PROPOSED PRIMARY DRINKING WATER STANDARD
% - VALUE EXCEEDS SCREENING LEVEL FOR FURTHER INVESTIGATION
@ - DETECTION LIMIT WAS NOT AVAILABLE FOR COMPARISON
WATER STANDARD(S) IN PARENTHESES ARE PROPOSED ONLY

MONTHLY SUMMARY OF RESULTS ABOVE DETECTION LIMIT FOR OCT 1985
INPUT FILE:WHC_D.WELLS

DOWN GRADIENT WELLS

CONSTITUENT NAME	UNITS	DETECTION LIMIT	WATER STANDARD	3-1-1	3-1-2	3-1-3	3-1-4	3-1-5	3-1-6
COLIFRM	MPN	3.00E+00	>DL					4.00E+00*	
BETA	PCI/L	8.00E+00	5.00E+01	1.17E+01	1.17E+01	2.51E+01	1.03E+01	1.01E+01	
CONDUCT	UMHO			1.81E+02@	2.14E+02@	2.54E+02@	1.75E+02@	2.08E+02@	1.91E+02@
PH				6.80E+00@	6.20E+00@	6.00E+00@	7.10E+00@	6.60E+00@	6.90E+00@
LOALPHA	PCI/L	4.00E+00	1.50E+01	1.61E+01%	4.76E+00	1.96E+01%	6.46E+00	6.00E+00	9.55E+00
BARIUM	PPB	6.00E+00	1.00E+03	3.40E+01	2.20E+01	2.80E+01	2.10E+01	2.00E+01	2.00E+01
SODIUM	PPB	1.00E+02		1.18E+04	1.21E+04	1.68E+04	8.29E+03	1.23E+04	7.56E+03
VANADUM	PPB	5.00E+00		8.50E+00	6.00E+00				
MANGESE	PPB	5.00E+00			6.00E+00				
POTASUM	PPB	1.00E+02		2.48E+03	3.26E+03	3.42E+03	2.79E+03	2.79E+03	2.56E+03
IRON	PPB	5.00E+01		7.80E+01	1.68E+02	2.03E+02	1.10E+02		
PERCENE	PPB	1.00E+01				1.00E+01			
CHLFORM	PPB	1.00E+01		1.70E+01	1.80E+01	1.90E+01	1.80E+01	1.70E+01	1.40E+01
METHYCH	PPB	1.00E+01		4.30E+02					
TOX	PPB	1.00E+02		4.21E+02					
TOC	PPB	1.00E+03		1.89E+03	1.47E+03		2.15E+03		
NITRATE	PPB	5.00E+02	4.50E+04	2.15E+04	2.07E+04	1.88E+04	2.53E+04	2.68E+04	2.18E+04
SULFATE	PPB	5.00E+02		1.35E+04	1.47E+04	1.17E+04	1.43E+04	1.36E+04	1.42E+04
CHLORID	PPB	5.00E+02		8.32E+03	1.18E+04	2.84E+04	4.88E+03	5.21E+03	6.38E+03

DRAFT

* - VALUE EXCEEDS PRIMARY DRINKING WATER STANDARD
\# - VALUE EXCEEDS PROPOSED PRIMARY DRINKING WATER STANDARD
% - VALUE EXCEEDS SCREENING LEVEL FOR FURTHER INVESTIGATION
@ - DETECTION LIMIT WAS NOT AVAILABLE FOR COMPARISON
WATER STANDARD(S) IN PARENTHESES ARE PROPOSED ONLY

MONTHLY SUMMARY OF RESULTS ABOVE DETECTION LIMIT FOR OCT 1985
INPUT FILE:WHC_D.WELLS

DOWN GRADIENT WELLS

CONSTITUENT NAME	UNITS	DETECTION LIMIT	WATER STANDARD	3-2-1	3-3-7	3-3-10	3-4-1	3-4-7	6-S30E15A
COLIFRM	MPN	3.00E+00	>DL	4.00E+00*					
BETA	PCI/L	8.00E+00	5.00E+01	1.46E+01	9.31E+00		1.06E+01	1.89E+01	8.22E+00
CONDUCT	UMHO			2.31E+02@	3.36E+02@	2.65E+02@	3.07E+02@	3.24E+02@	4.83E+02@
PH				7.00E+00@	7.80E+00@	7.00E+00@	7.50E+00@	6.80E+00@	6.50E+00@
LOALPHA	PCI/L	4.00E+00	1.50E+01	8.59E+00	8.25E+00	2.32E+01%	1.26E+01	3.97E+01%	
BARIUM	PPB	6.00E+00	1.00E+03	4.80E+01	3.70E+01	4.40E+01	3.40E+01	4.10E+01	6.40E+01
SODIUM	PPB	1.00E+02		1.47E+04	2.06E+04	1.26E+04	1.75E+04	1.91E+04	1.49E+04
VANADUM	PPB	5.00E+00			9.00E+00		9.00E+00	5.00E+00	5.00E+00
MANGESE	PPB	5.00E+00		5.00E+00	6.00E+00				
POTASUM	PPB	1.00E+02		3.78E+03	5.28E+03	3.71E+03	4.97E+03	4.65E+03	6.94E+03
IRON	PPB	5.00E+01		9.70E+01	2.82E+02	1.59E+02	1.92E+02		
LEADGF	PPB	5.00E+00	5.00E+01						7.20E+00
1,1,2-T	PPB	1.00E+01					1.70E+01		
TOC	PPB	1.00E+03		1.14E+03	1.18E+03			1.07E+03	1.61E+03
NITRATE	PPB	5.00E+02	4.50E+04	2.23E+04	1.08E+04	1.64E+04	9.42E+03	1.52E+04	1.10E+04
SULFATE	PPB	5.00E+02		1.37E+04	2.96E+04	1.69E+04	2.41E+04	3.68E+04	1.55E+04
CHLORID	PPB	5.00E+02		1.17E+04	1.23E+04	8.16E+03	7.79E+03	1.32E+04	3.76E+03

DRAFT

* - VALUE EXCEEDS PRIMARY DRINKING WATER STANDARD
\# - VALUE EXCEEDS PROPOSED PRIMARY DRINKING WATER STANDARD
% - VALUE EXCEEDS SCREENING LEVEL FOR FURTHER INVESTIGATION
@ - DETECTION LIMIT WAS NOT AVAILABLE FOR COMPARISON
WATER STANDARD(S) IN PARENTHESES ARE PROPOSED ONLY

MONTHLY SUMMARY OF RESULTS ABOVE DETECTION LIMIT FOR OCT 1985
INPUT FILE:WHC_D.WELLS

DOWN GRADIENT WELLS

CONSTITUENT NAME	UNITS	DETECTION LIMIT	WATER STANDARD	3-T-1	3-T-2
BETA	PCI/L	8.00E+00	5.00E+01	3.84E+01	1.69E+01
CONDUCT	UMHO			2.80E+02@	3.09E+02@
PH				7.10E+00@	7.60E+00@
LOALPHA	PCI/L	4.00E+00	1.50E+01	2.05E+01%	1.07E+01
BARIUM	PPB	6.00E+00	1.00E+03	2.60E+01	3.10E+01
SODIUM	PPB	1.00E+02		1.56E+04	2.67E+04
MANGESE	PPB	5.00E+00			4.00E+01
POTASUM	PPB	1.00E+02		3.21E+03	5.74E+03
IRON	PPB	5.00E+01			6.80E+01
CHLFORM	PPB	1.00E+01		1.30E+01	
METHYCH	PPB	1.00E+01		7.10E+01	
TOC	PPB	1.00E+03			3.85E+03
NITRATE	PPB	5.00E+02	4.50E+04	1.97E+04	1.09E+04
SULFATE	PPB	5.00E+02		1.22E+04	7.44E+03
FLUORID	PPB	5.00E+02	1.40E+03		5.40E+02
CHLORID	PPB	5.00E+02		2.61E+04	1.88E+04

DRAFT

* - VALUE EXCEEDS PRIMARY DRINKING WATER STANDARD
\# - VALUE EXCEEDS PROPOSED PRIMARY DRINKING WATER STANDARD
% - VALUE EXCEEDS SCREENING LEVEL FOR FURTHER INVESTIGATION
@ - DETECTION LIMIT WAS NOT AVAILABLE FOR COMPARISON
WATER STANDARD(S) IN PARENTHESES ARE PROPOSED ONLY

Attachment 1

UNITED STATES ENVIRONMENTAL PROTECTION AGENCY
REGION 10
Seattle, Washington

REPLY TO ATTN OF: M/S 329

MEMORANDUM

SUBJECT: Observations and Comments Relating to the Ground-Water Monitoring Activities in the "100" and "300" Areas of Hanford

FROM: Frederick Wolf, Hydrogeologist
Field Operations and Technical Support Branch

TO: Marcia Bailey, Environmental Protection Specialist
RCRA Compliance Branch

Observation of the sampling techniques employed at this site impressed me favorably. The only critical comment I have concerns the "plumbing" used during well pumpage. Since ground-water chemistry is frequently controlled by dissolved gasses (which include CO_2), the possibility of developing non-laminar flow in a pipe or fitting is of considerable concern. Dissolved gasses, dependent on partial pressures, can be lost by rapid changes in fluid pressure, resulting in pH inaccuracy and possible losses of dissolved metals and organics. Analysis of wellpurging indicates that after 2 minutes of pumping, the well is producing 100% aquifer water.

My concerns with the overall aspects of ground-water monitoring are more fundamental. Frankly, without additional geohydrologic information specific to the 100 and 300 areas, little interpretation other than "geo-speculation" is possible. Data is required concerning: 1. formation hydraulic conductivity, 2. storage coefficients , and 3. Vertical (as well as horizontal) head gradients. Also of concern is the design of the monitoring wells. Apparently these wells were installed to meet a variety of needs and may not be appropriate for trace organics monitoring. The well materials, screen design and length, and construction techniques used were frequently not in compliance with RCRA technical guidelines. My recommendation is that where organic contamination is suspected or confirmed, modern monitoring wells, constructed using approved materials (such as stainless steel) and with shorter screen lengths be installed. I also recommend pump testing of all monitoring wells at these locations to determine hydraulic conductivity. Slug testing at this site might further reduce the value of these monitoring points for chemical or radiological data, and should not be considered.

My final concern deals with delineation of the hydrogeology at these locations. (The approacn taken seems to be "geological"; it may be necessary instead to delineate ground-water flow boundaries in a hydraulic sense.) I recommend additional monitoring wells constructed to greater depths with supplemental down hole geophysical logging effort, along with in-situ testing of hydraulic conductivity, as appropriate.

Attachments

9312760210 7

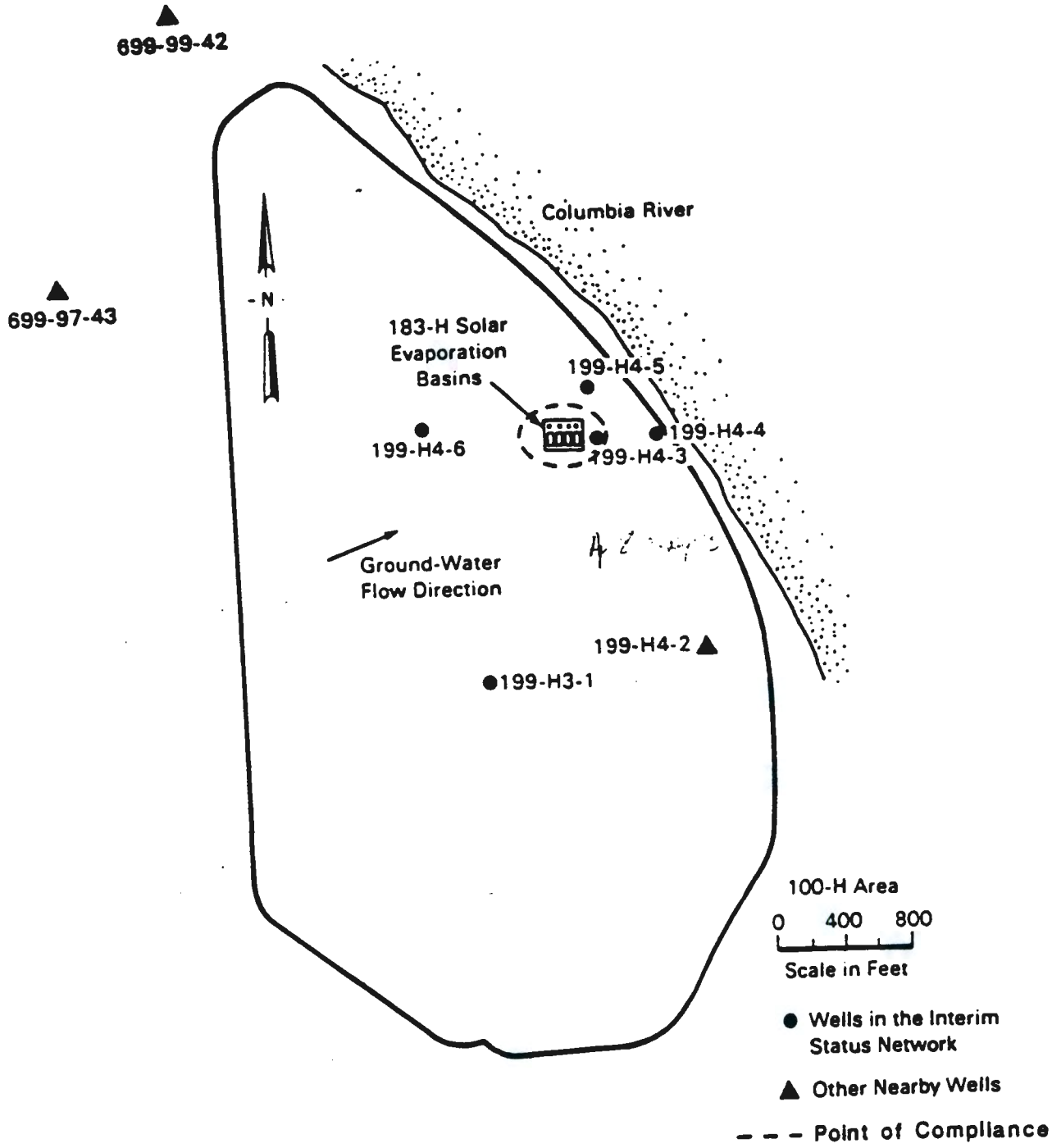

FIGURE 5-1. 100-H AREA WELL LOCATION MAP

9 3 1 2 7 5 0 2 1 0 8

Attachment 3

ANALYSES FOR WELLS SAMPLED 6/18-20/1985

Constituent	199-H4-3	199-H4-4	199-H4-6	399-1-5	399-8-2	399-1-4	399-1-2	399-1-3(a)
arsenic	x	x	x	x	x	x	x	x
barium	x	x	x	x	x	x	x	x
chromium	x	x	x	x	x	x	x	x
cadmium	x	x	x	x	x	x	x	x
fluoride	x	x	x	x	x	x	x	x
lead	x	x	x	x	x	x	x	x
mercury	x	x	x	x	x	x	x	x
nitrate	x	x	x	x	x	x	x	x
selenium	x	x	x	x	x	x	x	x
silver	x	x	x	x	x	x	x	x
endrin	x	x	x	x	x	x	x	x
lindane	x	x	x	x	x	x	x	x
methoxychlor	x	x	x	x	x	x	x	x
toxaphene	x	x	x	x	x	x	x	x
2,4-D	x	x	x	x	x	x	x	x
2,4,5-TP Silvex	x	x	x	x	x	x	x	x
radium	x	x	x	x	x	x	x	x
gross alpha	x	x	x	x	x	x	x	x
gross beta	x	x	x	x	x	x	x	x
coliform	x	x		x	x	x	x	x
vanadium	x	x						
copper	x	x		x	x	x	x	x
manganese	x	x						
sodium	x	x		x	x	x	x	x
potassium	x	x	x					
hydrazine	x	x	x	x	x	x	x	x
cyanide	x	x	x	x	x	x	x	x
sulfate	x	x	x					
perchlorate	x	x	x		-			
chloride	x	x	x					
ammonium	x	x	x	x	x	x	x	x
antimony				x	x	x	x	x
nickel				x	x	x	x	x
aluminum				x	x	x	x	x
carbon tetrachloride				x	x	x	x	x
benzene				x	x	x	x	x
dioxane				x	x	x	x	x
methyl ethyl ketone				x	x	x	x	x
pyridine				x	x	x	x	x
toluene				x	x	x	x	x
xylene				x	x	x	x	x
1,1,1-trichloroethane				x	x	x	x	x
1,1,2-trichloroethane				x	x	x	x	x
trichloroethylene				x	x	x	x	x
perchloroethylene				x	x	x	x	x
hexachlorophene				x	x	x	x	x

Attachment 3, continued

	199-H4-3	199-H4-4	199-H4-6	399-1-5	399-8-2	399-1-4	399-1-2	399-1-3[a]
naphthalene				x	x	x	x	x
phenol				x	x	x	x	x
chlorinated benzenes				x	x	x	x	x
sulfide				x	x	x	x	x
thiourea				x	x	x	x	x
formaldehyde				x	x	x	x	x
kerosene				x	x	x	x	x
ethylene glycol				x	x	x	x	x
phosphate				x	x	x	x	x
dioxin				x	x	x	x	x
additional from 9905	x			x				

(a) A sample from this well was collected by WDOE; PNL postponed sample collection from this well due to high winds and blowing dust and debris.

9 3 1 2 7 5 0 2 1 1 0

Attachment 4

Levels of Contaminants Found in 100-H Area Wells
June and July, 1985

Upgradient Wells
All values given as ppb

	Well 199-H3-1		Well 199-H4-6	
	June	July	June	July
Chromium	26	37	26	26
Lead	121	85	42	105
Nitrate	59,000	71,600	15,000	20,100
Cadmium	2	2	13	2

Downgradient Wells
All values given as ppb

	Well 199-H4-5		Well 199-H4-4		Well 199-H4-3	
	June	July	June	July	June	July
Chromium	180	472	646	729	1,130	1,030
Lead	147	136	30	61	70	43
Nitrate	15,100	23,800	1,300,000	510,300	1,350,000	621,000
Cadmium	2	2	2	2	2	2

EPA Interim Primary Drinking Water Standards
Maximum Levels, ppb

Chromium	50
Lead	50
Nitrate (as N)	10,000
Cadmium	10

Attachment 5

TABLE 4-1

AN ESTIMATE OF CHEMICALS POTENTIALLY DISCHARGED TO THE 300 AREA PROCESS TRENCHES PRIOR TO FEBRUARY 1, 1985

Intermittent Discharges			Later Discharges*	
<Grams	<kgs			
Ammonium Bifluoride	Benzene		Copper	~30 kg/mo**
Antimony	Carbon Tetrachloride		Detergents	≤30 kg/mo**
Arsenic	Chromium		Ethylene Glycol	≤200 l/mo
Barium	Chlorinated Benzenes		Hydrofluoric Acid	~100 kg/mo
Cadmium	Degreasing Solvents		Nitrates	≤2000 kg/mo**
Dioxane	Formaldehyde		Nitric Acid	≤300 l/mo
Dioxin†	Formic Ccid		Sodium Hydroxide	≤300 l/mo
Hydrocyanic Acid	Hexachlorophene		Paint Solvents	≤100 l/mo
Pyridine	Kerosene		Photo Chemicals	≤700 l/mo
Selenium & Compounds	Lead		Sodium Chloride	~75 ton/yr**
Thiourea	Methyl Ethyl Ketone		Uranium	~20 kg/mo**
Misc. Laboratory Chemicals	Mercury		Perchloroethylene	~450 l***
	Napthalene		Heating Oil	~300 l***
	Nickel		2-Butoxy Ethanol	1200 l/yr
	Phenol			
	Silver			
	Sulfuric Acid			
	Tetrachloroethylene (Perchloroethylene)			
	Toluene			
	Tributylphosphate (Paraffin Hydrocarbon Solvents)			
	1,1,1-Trichloroethane (Methyl Chloroform)			
	Trichloroethylene			
	Xylene			

†Included only because of the potential for Dioxin to exist as a trace impurity in Chlorinated Benzenes.

*These discharges were relatively continuous.

**These materials are still discharged.

***Known spills.

9 3 1 2 7 6 0 2 1 1 2

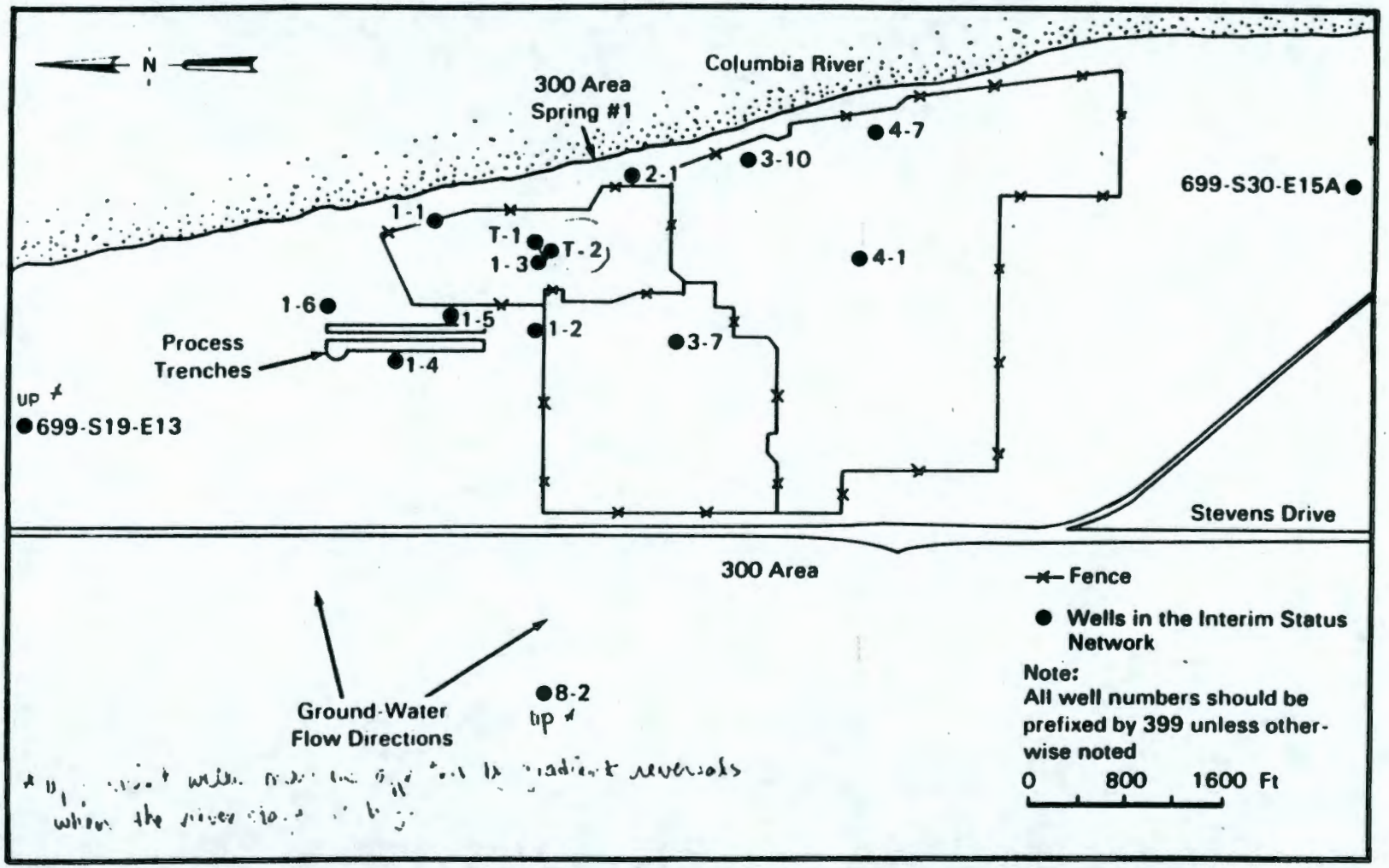

T-2 is the only deep well, i.e., not screened at the top of the aquifer

FIGURE 5-1. LOCATION OF WELLS IN THE INTERIM STATUS NETWORK

Attachment 7

Levels of Contaminants Found in 300 Area Wells
June 1985

Upgradient Wells
All values given as ppb

	Well 399-8-2	Well 699-S19-E13
Lead	45	126
Chloroform	<10	<10
Trichloroethylene	<10	<10

Downgradient Wells
All values given as ppb

Lead

399-2-1	399-1-1	399-1-2	399-1-3	399-1-4	399-4-1
55	127	115	30	38	99

399-4-7	399-3-10	699-E15A	399-1-5	399-1-6	399-3-7
82	77.5	81	30	44	140

Chloroform

399-2-1	399-1-1	399-1-2	399-1-3	399-1-4	399-4-1
13	28	15	42	30	<10

399-4-7	399-3-10	699-E15A	399-1-5	399-1-6	399-3-7
<10	<10	<10	25	<10	<10

Trichloroethylene

399-2-1	399-1-1	399-1-2	399-1-3	399-1-4	399-4-1
<10	<10	<10	<10	<10	12

399-4-7	399-3-10	699-E15A	399-1-5	399-1-6	399-3-7
<10	<10	<10	<10	<10	30

9 3 1 2 7 6 0 2 1 1 4

- RCRA -
ENFORCEMENT
CONFIDENTIAL
DO NOT DUPLICATE
WITHOUT PERMISSION

RCRA CONFIDENTIAL

'86 JAN 13 1986

M/S 533

Subject: RCRA Ground Water Monitoring Oversight Inspection, U.S.DOE Hanford

From: Marcia L. Bailey MLB

To: File

A ground water monitoring inspection was conducted at part of the U.S. Department of Energy Hanford facility on June 18-22, 1985. This was conducted as an oversight inspection of the Washington Department of Ecology. The inspection was limited to the 100-H and 300 areas of the Hanford facility.

Participating in the inspection for EPA were Fred Wolf and myself. Denis Erickson represented Ecology. Battelle Pacific Northwest Laboratory personnel conducted the purging and sampling procedures for U.S.DOE.

Field measurements and purging and sampling procedures were observed, and duplicate samples obtained, for four wells in the 300 Area and three wells in the 100-H Area. (EPA and Ecology analysis results for duplicate samples are not yet available.) Battelle's procedures were, for the most part, conducted efficiently, using appropriate protocol. (See the comments regarding flow rates and their potential impact on sample integrity in Fred Wolf's report, Attachment 1.)

Following are comments which relate to the specific areas which we observed. Each is treated, for regulatory purposes, as a separate facility.

100-H Area

Four concrete solar evaporation basins comprise the 183-H Basin, within the 100-H area. Since sometime during the 1970's, the basins accepted mixed chemical wastes generated at the N Reactor Fuel Fabrication Facilities for storage purposes. Hanford's Part B application, submitted in November 1985, states that the basins would discontinue receipt of wastes on or before November 8, 1985, and that closure was scheduled to be effected by removal of all wastes and contaminated soil and concrete.

The sampling effort at the time of this inspection marked the implementation of Hanford's interim status ground water monitoring program. Wells installed previously, for other monitoring purposes, are being used

93127602115

for this program. According to the Part B application, an assessment program was developed, rather than a detection program, since previous data had indicated the presence of dangerous waste constituents. Therefore, Hanford is pursuing the option of an alternate ground-water monitoring system, the requirements for which are described at 40 CFR §265.90(d).

The monitoring network consists of five wells (see map, Attachment 2). Two of the wells are considered upgradient, although the Part B application states that these wells may be sometimes influenced by gradient reversals which occur when the Columbia River stage is high. At least one other well was being investigated to determine its suitability as an upgradient well for this area.

Samples for analysis are reportedly being obtained monthly. The list of parameters that were to be analyzed for the samples being taken during this inspection was provided by Battelle and is included here as Attachment 3. According to the Part B application, "additional parameters, such as the contamination indicators, that are required for a detection-level program (but not for an assessment-level program) have recently been added for consistency with other interim status programs." Two wells are also being analyzed for the dangerous waste constituents in WAC 173-303-9905 (comparable to Appendix VIII), but these results have not yet been made available.

Hanford's analytical results for this area were made available in November, 1985, for samples taken during the months of June and July, 1985. Results for tetrachloroethylene were omitted, according to the facility, due to potential contamination introduced into the sample by the sampling pump. Chromium, lead and nitrate levels exceeded drinking water standards, including, for some parameters, samples from upgradient wells. A synopsis of levels of these contaminants is given in Attachment 4.

The adequacy of the wells used by Hanford in its monitoring network in this area is under study by EPA and by Ecology, subsequent to information submittals by Hanford in October and November, 1985.

In Hanford's Part B application, it is stated that "a full description of the plume cannot be accomplished until a full year of sampling has been conducted because of the seasonal variations known to exist in this area." However, because of the limited number of wells and the fact that all downgradient wells show contamination, the extent of the plume is not determinable from any amount of data derived from the existing wells. Additional wells must be installed to accomplish this. Also, additional pump testing to determine hydraulic conductivity is recommended (see Attachment 1). This would yield information that would help identify the rate of plume movement, which has not yet been done.

9 3 1 2 7 6 0 2 1 1 6

300 Area

The 300 Area at Hanford contains reactor fuel manufacturing facilities and research and development laboratories. The 300 Area Process Trenches, of interest for the purposes of this inspection, consist of two 1500-feet-long leaching trenches used to dispose of liquid wastes generated in the 300 Area. Flow to the trenches reportedly averages approximately 2.5 million gallons per day. According to Hanford's Part B application, steps were taken to eliminate disposal of dangerous or hazardous wastes into these trenches subsequent to February 1, 1985, and that since then, "process trench influent consists only of cooling water, process water, and other non-sanitary waste which are not materials designated dangerous by RCRA State Regulations or the WHC Environmental Protection Manual, MG-99." Previous discharges to the trenches (since 1975) consisted of laboratory, maintenance and process wastes. An estimate of past discharges was provided by Hanford and is given here as Attachment 5.

The Hanford Site Hazardous Waste Groundwater Monitoring Plan, received in May, 1985, describes two incidents of unintentional spills of tetrachloroethylene into the 300 Area process trenches. These consisted of approximately 120 gallons in November 1982 and approximately 20 gallons in July 1984. The document describes ground water investigations that were conducted subsequent to each of these releases. Contamination was found in downgradient well samples in each case, with concentration peaks of 1840 ppb after the first incident and 690 ppb after the second. Despite the fact that contamination of the ground water with hazardous waste was established soon after each release, no report was made of these findings to the EPA Regional Administrator, which is required by 40 CFR §265.93(d)(5) (in conjunction with the requirements of 40 CFR §265.90(d)).

As with the 100-H Area ground water monitoring plan, an assessment program, rather than a detection program, was designed for the 300 Area process trenches, due to prior knowledge of contamination. The interim status ground water monitoring program was implemented in June, 1985.

The monitoring network consists of 16 wells, most of which were installed for previous monitoring efforts. Locations of the wells are shown on the area map, Attachment 6. Two of the wells are considered to be upgradient, although the same gradient-reversal phenomenon present in the 100-H Area wells probably occurs here as well.

All of the downgradient wells, except one, are perforated or screened at the top of the aquifer. The uppermost aquifer in the 300 Area is about 90 feet thick, with the water table approximately 30-40 feet below ground surface. Most of the wells are carbon steel-cased, with 50 feet of perforations at the top of the aquifer. Three wells are stainless steel, screened at the top of the aquifer for distances ranging from 10 to 40 feet. Another stainless steel well is screened for 25 feet at a depth of 45-70 feet below land surface.

9312760211 7

Since hazardous wastes disposed in the process trenches include substances which would be expected to settle to the bottom of the saturated zone, the wells which comprise the 300 Area monitoring network are not sufficient to detect or rule out the presence of such contamination. In addition, the complicated nature of the geology in the Hanford area requires that different stratigraphic horizons be monitored; installation of well clusters with different vertical screening lengths would be appropriate. Screen lengths should not exceed 10 feet.

The list of substances to be analyzed for samples taken from the 14 wells in the 300 Area sampled in June 1985 is given in Attachment 3. As with the 100-H Area, plans have been made to include detection-level monitoring parameters for all wells, and WAC 173-303-9905 parameters for two wells. Results for the June 1985 sampling effort were made available in November 1985. The concentrations of contaminants which were detected and reported are given in Attachment 7. The results for 1,1,1-trichloroethane, tetrachloroethylene, and methylene chloride were omitted, according to the facility, due to the possibility of contamination of samples by the sampling pumps.

It is stated in Hanford's Part B application that, for the 300 Area, "the data available at this time are not sufficient to allow plume description," and further, that "a more complete plume description will be provided when data for the first full year of Interim Status monitoring become available in June of 1986." For reasons which include the lack of adequate monitoring wells, as described above, a complete plume description is not possible utilizing the existing ground water monitoring network.

9 3 1 2 7 6 0 2 1 1 8

CORRESPONDENCE DISTRIBUTION COVERSHEET

Author	Addressee	Correspondence No.
R. D. Izatt, RL R. E. Lerch, WHC	Roger F. Stanley, Ecology	Incoming: 9206442

Subject: RCRA GROUNDWATER MONITORING

INTERNAL DISTRIBUTION

Approval	Date	Name	Location	w/att
		Correspondence Control	R1-03	X
		C. K. DiSibio	B3-03	
		M. C. Hughes	R2-81	X
		R. E. Lerch, Assignee	B2-35	
		H. E. McGuire	B3-63	
		M. A. Mihalic	L4-88	X
		EDMC	H4-22	X

The date of this letter is March 1, 1988. Ecology provided the letter to WHC for specific inclusion in the files.

9312760211 9

SEP 15 1992
"I Only"MT/34774