Attachment 51 – Appendix 7.0

Drawings and Documents

Index

Appendix 7.1	WTP Documents Applicable to All Areas Process Flow Diagrams
Appendix 7.2	WTP Documents Applicable to All Areas Piping and Instrumentation Diagrams
Appendix 7.5	WTP Common Civil, Structural, and Architectural Criteria and Typical Design Details
Appendix 7.7	WTP Common Specifications
Appendix 7.9	WTP Common Material Selection Documentation
Appendix 7.11	WTP Documents Applicable to All Areas IQRPE Reports
Appendix 7.12	WTP Common Installation Plans
Appendix 7.15	WTP Common Operating Documents

Attachment 51 – Appendix 7.1

WTP Documents Applicable to All Areas
Process Flow Diagrams

The following drawings have been incorporated into Appendix 7.1 and can be viewed at the Ecology Richland Office. **New drawings are in bold lettering.**

Drawing/Document Number	**Description**
24590-WTP-M5-V17T-P0001, Rev 0	Process Flow Diagrams Legends & Symbols
RESERVED	RESERVED

SERVICES

GENERAL SERVICE SYMBOL

LIST OF LETTERS USED IN ABOVE SYMBOL:

CHW	CHILLED WATER
DIW	DEMINERALIZED WATER
HPS	HIGH PRESSURE STEAM
ISA	INSTRUMENT SERVICE AIR
LPS	LOW PRESSURE STEAM
LVE	LOW VOLTAGE ELECTRICAL
PCW	PLANT COOLING WATER
PSA	PLANT SERVICE AIR
PSW	PROCESS SERVICE WATER
PWD	PLANT WASH AND DISPOSAL
RLD	RADIOACTIVE LIQUID WASTE DISPOSAL
SCW	STEAM CONDENSATE WATER
SHR	SODIUM HYDROXIDE REAGENT

PVP — PASSIVE AIR SUPPLY

INSTRUMENTATION

INSTRUMENT CONNECTION

CONTROL SIGNAL

GENERAL INSTRUMENT

LIST OF LETTERS USED IN ABOVE SYMBOL:

A	ANALYSIS
C	CONDUCTIVITY
D	DENSITY
E	VOLTAGE (EMF)
F	FLOW
I	CURRENT
J	POWER
L	LEVEL
M	MOISTURE
P	PRESSURE
PD	PRESSURE DIFFERENTIAL
R	RADIATION
S	SPEED
T	TEMPERATURE
W	WEIGHT
X	MISCELLANEOUS

TYPE OF CONTROLLER:

C	CONTROLLER
I	INDICATOR
Q	TOTALIZER

EXAMPLES:

LC	LEVEL CONTROLLER
LIC	LEVEL INDICATING CONTROLLER
FI	FLOW INDICATOR
FQI	TOTALIZED FLOW INDICATOR

VALVES

THROTTLED ACTUATED VALVE

ON/OFF ACTUATED VALVE

3 WAY VALVE

MANUAL VALVE (OPEN)

MANUAL VALVE (CLOSED)

CHECK VALVE

ROTARY VALVE

FLOW RESTRICTOR (VARIABLE)

FLOW RESTRICTOR (FIXED)

PRESSURE RELIEF VALVE

VACUUM RELIEF VALVE

BUTTERFLY DAMPER

HEAT TRANSFER EQUIPMENT

COOLING OR HEATING COIL

PLATE HEAT EXCHANGER

GENERIC HEAT EXCHANGER

U-TUBE HEAT EXCHANGER

SHELL AND TUBE HEAT EXCHANGER

DOUBLE PIPE HEAT EXCHANGER

ELECTRIC HEATER

DESUPERHEATER

CATALYST BED

MELTER

THERMAL OXIDIZER

FILM COOLER

STREAMS

PRIMARY STREAM

SECONDARY STREAM

OTHER STREAM

XXXXX — STREAM NUMBER

XX XXX-XXXXX — OFFSHEET CONNECTOR

DRAWING SEQUENCE NUMBER

DRAWING FACILITY CODE

COORDINATE LOCATION

SEPARATION EQUIPMENT

TRAY COLUMN

PACKED / ION EXCHANGE COLUMN

CAUSTIC SCRUBBER

SUBMERGED BED SCRUBBER

SILVER MORDENITE COLUMN

HIGH EFF. MIST ELIMINATOR (HEME)/ DEMISTER

EVAPORATOR SEPARATOR VESSEL

MIST ELIMINATOR/SCREEN

INLINE LIQUID FILTER

HEPA - HEPA FILTER (SHOWN)
HIGH - HIGH EFFICIENCY FILTER
MOD - MODERATE EFFICIENCY FILTER

ULTRAFILTER

BREAK POT

WET ELECTROSTATIC PRECIPITATOR (WESP)

STORAGE EQUIPMENT

VESSEL

JACKETED VESSEL

TANK

TANK WITH CONICAL HEAD

TANK WITH DISHED OR ELLIPSOIDAL HEAD

CANISTER DECON VESSEL

BOGIE DECON VESSEL

PULSE POT

HOPPER WITH FILTER

STORAGE SILO

TRANSPORTER

BLENDING SILO

MIXING EQUIPMENT

PJM — PULSEJET MIXER (PJM) WITH JET PUMP PAIR AND CONTROLLER

MECHANICAL AGITATOR

BLENDING HEAD

STATIC MIXER

SPARGER

NOTES:

1. EQUIPMENT SYMBOLS SHOWN ON THIS DIAGRAM ARE NOT INTENDED TO SPECIFY EQUIPMENT DESIGNS OR VESSEL INTERNALS. THE SPECIFIC CONFIGURATION AND ORIENTATION OF FLOW ARROWS ARE PROVIDED AS EXAMPLES FOR ILLUSTRATIVE PURPOSES AND ARE NOT REQUIREMENTS. THIS DRAWING ONLY DEFINES SYMBOLS TO BE USED ON PERMIT DRAWINGS. REFER TO PERMIT DRAWINGS FOR IDENTIFICATION OF PERMIT AND NON-PERMIT AFFECTING PORTIONS.
2. CONTENTS OF THIS DOCUMENT ARE DANGEROUS WASTE PERMIT AFFECTING.

TRANSFER EQUIPMENT

ADS PUMP

CENTRIFUGAL PUMP

FAN/BLOWER

PURGE PUMP

POSITIVE DISPLACEMENT PUMP

EJECTOR/EDUCTOR

RFD — REVERSE FLOW DIVERTER (RFD) WITH CHARGE VESSEL, JET PUMP PAIR, AND CONTROLLER

COMPRESSOR

MISCELLANEOUS

VENT WITH MESH GUARD

ATMOSPHERIC VENT

SS — SAMPLE SYSTEM

pH — pH ANALYSIS SYSTEM

ASD — ADJUSTABLE SPEED DRIVE

FLEXIBLE PIPE

SPRAY NOZZLES

DUST MITIGATION EQUIPMENT

PLEASE NOTE THAT SOURCE, SPECIAL NUCLEAR, AND BYPRODUCT MATERIALS, AS DEFINED IN THE ATOMIC ENERGY ACT OF 1954 (AEA), ARE REGULATED AT THE U.S. DEPARTMENT OF ENERGY (DOE) FACILITIES EXCLUSIVELY BY DOE ACTING PURSUANT TO ITS AEA AUTHORITY. DOE ASSERTS, THAT PURSUANT TO THE AEA, IT HAS SOLE AND EXCLUSIVE RESPONSIBILITY AND AUTHORITY TO REGULATE SOURCE, SPECIAL NUCLEAR, AND BYPRODUCT MATERIAL AT DOE-OWNED NUCLEAR FACILITIES. INFORMATION CONTAINED HEREIN ON RADIONUCLIDES IS PROVIDED FOR PROCESS DESCRIPTION PURPOSES ONLY.

THOMAS J. VALENTI — STATE OF WASHINGTON — 39088 — REGISTERED PROFESSIONAL ENGINEER — 7/28/04 — EXPIRES: 12/30/04

REV	DESCRIPTION	ORG	CHKD	RVWD	APVD	DATE
0	ISSUED FOR PERMITTING USE	CWF	BDJ	JAH	JAH	7/27/04

REVISION HISTORY

ISSUED BY RPP-WTP PDC — INIT — DATE — ISSUE STAMP

	BY	DATE
PROJECT No.	24590	
SITE	HANFORD	
AREA	200E	
BUILDING No.		
ORIGINATOR	William F. Lemke III	7-27-04
CHECKER	Brian D. Fabi	7-27-04
APPROVER	Mark J. Abrahamson	7/27/04
REVIEWER	Mark J. Abrahamson	7/27/04

CONTENT APPLICABLE TO ALARA? [ ] YES [X] NO
ADR NO. REV:

BECHTEL — RIVER PROTECTION PROJECT WASTE TREATMENT PLANT 2435 STEVENS CENTER PLACE RICHLAND, WA 99352

CONTRACT No: DE-AC27-01RV14136

PROCESS FLOW DIAGRAM LEGEND & SYMBOLS

SCALE: NTS

24590-WTP-M5-V17T-P0001

REV 0

FORM E_SDNDGN 02/2003

"E" SIZE - 44x34 COMPUTER GENERATED - MANUAL

07/23/2004 11:00:30 AM

PLOTTED BY: wfleming
\\Mea\dpm\pcdata\24590-WTP-M5-V17T-P0001.dgn

Attachment 51 – Appendix 7.2

WTP Documents Applicable to All Areas
Piping and Instrumentation Diagrams

The following drawings have been incorporated into Appendix 7.2 and can be viewed at the Ecology Richland Office. **New drawings are in bold lettering.**

Drawing/Document Number	**Description**
24590-WTP-PER-PL-02-001, Rev 6	Piping Material Class Description
RESERVED	RESERVED

R10520617

Document title: **Piping Material Class Description**

ISSUED BY
RPP-WTP PDC

Contract number: DE-AC27-01RV14136

Department: Plant Design

Author(s): B. Gavino

Principal author signature: B Gavino

Document number: 24590-WTP-PER-PL-02-001, Rev 6

Checked by: J. Sutton J B Sutton

Checker signature:

Date of issue: 3/21/05

Issue status: Issued for Permitting Use

Approved by: M. Myatt

Approver's position: Discipline Engineering Manager

Approver signature:

DICK SHAN HUANG
STATE OF WASHINGTON
40251
REGISTERED
PROFESSIONAL ENGINEER

3/21/05

EXPIRES: 07/09/06

River Protection Project
Waste Treatment Plant
2435 Stevens Center Place
Richland, WA 99354
United States of America
Tel: 509 371 2000

History Sheet

Rev	Date	Reason for revision	Revised by
0	09/20/02	Issued for Permitting Use	B. Gavino
1	02/10/03	Issued for Permitting Use	B. Gavino
2	03/27/03	Issued for Permitting Use	B. Gavino
3	12/23/03	Issued for Permitting Use	B. Gavino
4	02/26/04	Issued for Permitting Use	B. Gavino
5	03/04/04	Issued for Permitting Use	B. Gavino
6	3/21/05	Issued for Permitting Use	B. Gavino

Contents

History Sheet 1
1 Introduction 3
2 Applicable Documents 3
3 Description 3
3.1 Codes 3
3.2 Pipe Wall Thickness and Branch Reinforcements 3
3.3 Design Conditions 3
3.4 Pipe 4
3.5 Flanges 4
3.6 Fittings 4
3.7 Bolting and Gaskets 5
3.8 Valves 5
3.9 Method of Construction 6
3.10 Branch Connection 6
3.11 Corrosion Allowance 6
3.12 Positive Material Identification (PMI) 6

Appendices

Appendix A - Piping Material Class Summary A-1

1 Introduction

This document describes the minimum requirements for the piping material classes for the River Protection Project – Waste Treatment Plant. It summarizes the piping material requirements for pipe, fittings, flanges, valves, and all other piping components for each specific pipe class as applicable to specific fluid service. The piping classes apply to bulk piping components and do not cover specialty items identified on engineering data sheets.

2 Applicable Documents

24590-WTP-3PS-G000-TP002, "Positive Material Identification (PMI)

3 Description

Appendix A summarizes the requirements in the piping material classes. Piping regulated under the Dangerous Waste Permit is identified on permit drawings. All piping classes are shown in this document for completeness. The following general guidelines/requirements are considered in the development of the piping material classes.

3.1 Codes

The applicable design code(s) is as noted on the piping material class summary (Appendix A). Any conflicts between this document and the applicable design codes shall be brought to the attention of the RPP-WTP piping engineering group of the plant design discipline.

3.2 Pipe Wall Thickness and Branch Reinforcements

The specific pipe thickness or schedule number is supported by a wall thickness calculation and if necessary, by a branch reinforcement calculation. Any increases in the design conditions used as the basis of these piping class sheets must be supported by a revision to the wall thickness calculation or by additional calculation.

The commercially available pipe wall thickness specified in the piping class sheets meet or exceed the minimum calculated wall thickness.

Integrally reinforced branch connections do not require a separate calculation. The branch reinforcement for all non-integrally reinforced shall be supported by a branch reinforcement calculation.

3.3 Design Conditions

The service limits and the corrosion/erosion allowance referred to in the piping material class summary are enveloping conditions. Pressures and temperatures listed shall not be exceeded except as permitted by the applicable code.

3.4 Pipe

Nominal pipe sizes (NPS) ⅛, ¼, ⅜, 1¼, 2½, 3½, 5 and 22, and any other nominal pipe size not shown in ASME B36.10 / B36.19, should not be used except to match manufacturer's equipment connections or as specified on the P&IDs. Where necessary to match a manufacturer's equipment connection, a transition piece must be employed immediately adjacent to the equipment for the transition to the next acceptable pipe size.

In general, all NPS 2 and larger pipe with a schedule of standard weight and heavier has been specified as double random length and NPS 1½ and smaller as single random length. The majority of pipe included in these classes is multiple stamped.
Example:
(Seamless API-5L Gr. B, ASTM A106 Gr. B and A53 Gr. B, or ASTM A312 TP 304/304L or ASTM A312 TP 316/316L).

For carbon steel material by ASME B31.3, Para./ Fig. 323.2.2, impact testing may be required.

Schedule 160 threaded pipe nipples for carbon steel and schedule 80S threaded pipe nipples for stainless steel have been used to provide enhanced mechanical strength.

3.5 Flanges

NPS 24 and smaller steel flange dimensions and ratings are to ASME B16.5.

NPS 26 through NPS 60 steel flange dimensions and ratings are to ASME B16.47 Series A. However, ASME B16.47 Series B may be used when needed to mate with existing equipment.

Flat faced flanges shall be used to match flat face equipment and other flat faced flanged components (e.g., copper alloy, cast iron flanges, GRP flanges and for NPS 30 and larger flanges in large diameter water lines).

Orifice flanges shall be in accordance with ASME B16.36 and shall be supplied in pairs, complete with jackscrews, but without bolts, gaskets, or orifice plates. Quantities on bill of material, material requisitions, etc., shall indicate sets, not individual flanges.

Blanks, either permanent of temporary are required to have sufficient thickness per the ASME B31.3 Code. Spectacle blinds in accordance with ASME B16.48 shall not be used as permanent blanks and shall be used only where required to isolate line for pressure testing, start up or maintenance. Gasket contact surface finishes shall be the same as the mating flanges.

3.6 Fittings

Buttweld fittings shall conform to the material requirements and wall thickness of the pipe with which they are used.

The wall thickness of reducing tees, concentric and eccentric reducers shall correspond on each end to the wall thickness of the mating pipe.

Half couplings shall not be used for branch connections in ASME B31.3 Piping Material Classes. Elbolets shall be used only where specifically allowed per the piping assembly details.

3.7 Bolting and Gaskets

Machine bolts shall not be used except as jackscrews and when bolting Cast Iron, Bronze, Ductile Iron, PVC, or Fiberglass flanges. Jackscrews shall be threaded full length. The length shall be measured from the bearing surface of the head and shall include the end point.

Stud bolts shall be threaded full length. Length of stud bolts shall be in accordance with ASME B16.5 or B16.47 as applicable, and referenced in piping material class as a bolt table. Bolt tables do not include increased lengths required for use with bolt tensioning and other non-standard components / equipment.

Cap screws are used where the valve or component design does not allow through bolts to be used for every bolthole. Cap screws shall be threaded full length. The length shall be measured from the bearing surface of the head and shall include the end point.

3.8 Valves

Valves specified to be drilled and tapped for drain connections, body cavity vents, etc., shall be supplied with the tapped holes fitted with solid, square head pipe plugs of the same basic material as the valve body, in accordance with ASME B16.14.

If ball valves are required to be "Fire Safe" they shall be in accordance with API 607 and shall have anti-static devices fitted in accordance with API 608.

Butterfly valves are used for positive shutoff in sizes 10 inch and larger. Wafer type butterfly valves have been specified for in-line service based on lower total installed and operation cost (TIC).

Tapped lugged wafer type (e.g., butterfly, check, etc.) valves have been specified for dead end application, and when fitted between cast iron or non-metallic flanges.

Unlined soft seated butterfly valves and plug valves, if required to be "Fire Safe" shall be in accordance with API 607.

Typical gear operated valve sizes:

Gate Valves		
Classes 150 and 300	NPS	14 & Larger
Classes 600 and 900	NPS	8 & Larger
Classes 1500 and 2500	NPS	8 & Larger
Globe and Angle Valves		
Classes 150 and 300	NPS	12 & Larger
Classes 600 and 900	NPS	6 & Larger
Classes 1500 and 2500	NPS	4 and Larger
Butterfly Valves		
Classes 150 and 300	NPS	10 & Larger
Classes 600 and 900	NPS	6 & Larger
Classes 1500 and 2500	NPS	6 & Larger
Ball and Plug Valves		

Classes 150 and 300	NPS	8 & Larger
Classes 600 and 900	NPS	6 & Larger
Classes 1500 and 2500	NPS	4 & Larger

Additionally, gear operators may be required on specific valves, to satisfy process, operational and/or other requirements.

3.9 Method of Construction

Basically, the method of construction is as follows:

- Shop fabricated carbon steel NPS 1½ and smaller pipe are socket welded while NPS 2 and larger are butt welded construction.
- Shop fabricated stainless steel NPS 1 pipe and smaller are socket welded while NPS 1½ and larger are butt welded.
- The small bore valves are socket welded up to size NPS 2 for both cases.
- Field fabrication for carbon and stainless steel piping NPS 2 and smaller should be socket weld.

Certain piping material classes in this document are required to be all butt weld construction based on the service requirements.

3.10 Branch Connection

The branch connection fittings are specified in the piping material class branch tables.

3.11 Corrosion Allowance

Corrosion allowance as used in pipe classes includes erosion. For pipe class W62F, 0.016" corrosion/ erosion allowance is used to match the interface piping.

3.12 Positive Material Identification (PMI)

Document 24590-WTP-3PS-G000-TP002 defines the requirements for Positive Material Identification (PMI).

Appendix A- Piping Material Class Summary

Class	Design Code / Fluid Content	Press/Temp Limits Psig @ °F	Flange Pressure Class	Corrosion / Erosion Allow (in.)	Pipe	Large Fittings	Small Fittings	Valve Body	Valve Trim	Gasket
B19A	Uniform Plumbing Code (WV) Potable Water	Based on Design 130 @ 200 150 @ 100	CL 150 MFR	0.0240	Copper 3/8" – 4", Type L (Type K, for Underground)	Wrought Copper	Wrought Copper	Cast Bronze/ Cast Iron	Bronze	EPDM
B19B	ASME B31.3, Category Normal Fluid Service (WK) Chilled Water Supply (WL) Chilled Water Return (ZA) Non Dangerous, Non Radioactive Liquid Effluent (ZR) Suspect Radioactive Condensate (ZU) Non-Radioactive Condensate	Based on Design 130 @ 200 150 @ 100	CL 150 MFR	0.0240	Copper 3/8" – 4", Type L (Type K, for Underground)	Wrought Copper	Wrought Copper	Cast Bronze/ Cast Iron	Bronze	EPDM

Class	Design Code / Fluid Content	Press/Temp Limits Psig @ °F	Flange Pressure Class	Corrosion / Erosion Allow (in.)	Pipe	Large Fittings	Small Fittings	Valve Body	Valve Trim	Gasket
C12A	ASME B31.3, Category Normal Fluid Service (DB) High Pressure Steam (GA) Argon (GB) Breathing air (GH) Helium (GK) 150 Psig Air (GL) Instrument Air (GN) Nitrogen (GP) P-10 (GQ) Process Air (GZ) Vessel Vent, Non-Radioactive (WB) Tower Cooling Water Supply (WC) Tower Cooling Water Return (WH) HVAC Hot Water Supply (WJ) HVAC Hot Water Return (WK) Chilled Water Supply (WL) Chilled Water Return (WP) Process Water (WR) Raw Water (WS) Recirculated Cooling Water, Suspect Radioactive (WT) Floor Drains (C2 Areas) (ZA) Non-Dangerous, Non-Radioactive Liquid Effluent (ZU) Non-Radioactive Condensate	Based on ASME B16.5 285 @ -20/100 260 @ 200 230 @ 300 200 @ 400	CL 150 B16.5	0.0625	Carbon Steel ½"–1½", XS 2" – 24", STD 28", 30", STD 36" - XS	Carbon Steel	Carbon Steel	Carbon Steel	Trim 8	304 SS Spiral-Wound/ Graphite Filled
C12B	ASME B31.3, Category Normal Fluid Service (CD) Carbon Dioxide Liquid/ Gas (DB) High Pressure Steam (DC) Low Pressure Steam (DL) 0 to 10 psig Steam (GQ)) Process Air (ZU) Non Radioactive Condensate	Based on ASME B16.5 285 @ -20/100 200 @ 400	CL 150 B16.5	0.0625	Carbon Steel ½" – 1½", XS 2" – 24", STD	Carbon Steel	Carbon Steel	Carbon Steel	Trim 8	304 SS Spiral-Wound/, Graphite Filled

Class	Design Code / Fluid Content	Press/Temp Limits Psig @ °F	Flange Pressure Class	Corrosion / Erosion Allow (in.)	Pipe	Large Fittings	Small Fittings	Valve Body	Valve Trim	Gasket
C12D	ASME B31.3, Category Normal Fluid Service (XK) Diesel Oil (XM) Fuel Oil	Based on ASME B16.5 285 @ -20/100 260 @ 200	CL 150 B16.5	0.0625	Carbon Steel ½" – 1½", XS 2" – 24", STD	Carbon Steel	Carbon Steel	Carbon Steel	Trim 8	304 SS Spiral-Wound/ Graphite Filled
C12E	NOTE: Fluid Code WF (Fire Protection Water) piping identified with this pipe class shall be in accordance with 24590-BOF-3PS-PZ41-T0004, 24590-WTP-3PS-P00Z-PZ41-T0001, and 24590-WTP-3PS-PZ41-T0002. Accordingly, the associated piping and components will be modeled using SpecMaker as this system is to subcontract and therefore does not require PipeWorks stock code materials.									
C12H	NFPA 13 (WF) Fire Protection (WR) Raw Water	Based on Design 175 @ 150	MFR	Per NFPA 13	Carbon Steel ½" - 12", Sch. 40	Ductile Iron/ Carbon Steel	Malleable Iron	Cast Iron/ Cast Bronze	Bronze	EPDM
C12U	ASME B31.3, Category Normal Fluid Service Underground Services: (GK) 150 Psig Air (GQ) Process Air (WB) Tower Cooling Water Supply (WC) Tower Cooling Water Return (WK) Chilled Water Supply (WL) Chilled Water Return (WP) Process Water (ZA) Non Dangerous, Non Radioactive Liquid Effluent	Based on ASME B16.5 285 @ -20/100 200 @ 400	CL 150 B16.5	0.0625	Carbon Steel, Externally Coated ½" – 1½", XS 2" – 24" STD 30", STD	Carbon Steel, Externally Coated	Carbon Steel, Externally Coated	Carbon Steel, Externally Coated	Trim 8	304 SS Spiral-Wound/ Graphite Filled
C14A	ASME B31.3, Category Normal Fluid Service (DB) High Pressure Steam (DC) Low Pressure Steam (GV) Vessel Vent Radioactive (GW) Suspect Radioactive Vent (GZ) Vessel Vent, Non-Radioactive (PS) Suspect Radioactive Slurry (WP) Process Water (WR) Raw Water (ZR) Suspect radioactive Condensate (ZU) Non-Radioactive Condensate	Based on Design 200 @ 400	CL 150 B16.5	0.125	Carbon Steel ½"– 2", XS 3" – 24", STD 30", STD	Carbon Steel	Carbon Steel	Carbon Steel	Trim 8	304 SS Spiral-Wound/ Graphite Filled

Class	Design Code / Fluid Content	Press/Temp Limits Psig @ °F	Flange Pressure Class	Corrosion / Erosion Allow (in.)	Pipe	Large Fittings	Small Fittings	Valve Body	Valve Trim	Gasket
C14B	ASME B31.3, Category Normal Fluid Service (ZR) Suspect Radioactive Condensate (ZU) Non-Radioactive Condensate	Based on Design 200 @ 400	CL 150 B16.5	0.125	Carbon Steel ½"– 8", Sch XS* *Pipe thickness is mandated by BOF Mech System Engineering	Carbon Steel	Carbon Steel	Carbon Steel	Trim 8	304 SS Spiral-Wound/ Graphite Filled
C31B	ASME B31.3, Category Normal Fluid Service Underground Services (GM) Ammonia	Based on Design 360 @ -28/ 150	None	0.0400	Low Temperature Service CS, Externally Coated ½" - 2", XS	None	Low Temp. Service CS, Ext. Coated	None	None	None
C31J	ASME B31.3, Category Normal Fluid Service (GM) Ammonia	Based on Design 360 @ -28/ 150	None	0.0400	Low Temperature Service Carbon Steel ½" - 2", XS	None	Low Temp Serv.CS	Low Temp Serv.CS	316 SS/ PTFE	None
F10A	ASME B31.3, Category-Normal Fluid Service (ZS) Process Radioactive Condensate	Double Containment Pipe								
	CARRIER	Based on design 100 @ 120	MFR	0.000	Filament Wound Fiberglass Reinforced Thermosetting Resin Pressure Pipe	Filament Wound with integral Sockets Same working Pressure or Greater Than Pipe From Same Manufacturer		PVDF	PVDF	EPDM
	ENCASEMENT (JACKET)	Atm @ 120								
G12A	Uniform Plumbing Code (WV) Potable Water	Based on Design 200 @ 150	CL 125/150/ MFR	0.050	Carbon Steel, Galvanized ½" –2", XS 3"– 12",Std	Ductile Iron, Galvanized	Malleable Iron, Galvanized	Cast bronze/ Ductile Iron	Bronze	EPDM
G12B	ASME B31.3, Category Normal Fluid Service (GL) Instrument Air (ZA) Non Dangerous, Non Radioactive Liquid Effluent	Based on Design 210 @ 200	CL 150 B16.5	0.0400	Carbon Steel, Galvanized ½" – 2", XS 3" – 12", STD	Carbon Steel, Galvanized	Malleable Iron, Galvanized	Cast bronze/ Stainless Steel	Bronze	304 SS Spiral-Wound/ Graphite Filled
G12C	NFPA 13 (WF) Fire Protection Water (WR) Raw Water	Based on Design 175 @ 150	MFR	0.0400	Carbon Steel Galvanized ½" – 12", Sch. 40	Carbon Steel Galvanized	Malleable Iron, Galvanized	Bronze/ DI	Bronze	EPDM
H00A	Uniform Plumbing Code (WV) Potable Water	Based on Design 200 @ 150	MFR	0.000	Cement Lined Ductile Iron Pressure Pipe	Cement Lined Ductile Iron	None	None	-	SBR Rubber

Class	Design Code / Fluid Content	Press/Temp Limits Psig @ °F	Flange Pressure Class	Corrosion / Erosion Allow (in.)	Pipe	Large Fittings	Small Fittings	Valve Body	Valve Trim	Gasket
H20A	AWWA Standards Underground Services: (WB) Tower Cooling Water Supply (WC) Tower Cooling Water Return (WK) Chilled Water Supply (WL) Chilled Water Return (WP) Process Water (WR) Raw Water (ZA) Non Dangerous, Non Radioactive liquid Effluent	Based on Design 250 @ 33 – 150 350* @ 135 *Short duration per Calc No. 24590-BOF-M6C-PCW-00001	MFR	0.000	Cement Lined Ductile Iron Pressure Pipe	Cement Lined Ductile Iron	None	Ductile Iron	Bronze	SBR Rubber (Part of Push-on Joint Fitting)
HF0A	NFPA 24 (WF) Fire Protection Water (WR) Raw Water	Based on Design 175 @ 150	MFR	0.000	Cement Lined Ductile Iron Pressure Pipe	Cement Lined Ductile Iron	NONE	NONE	NONE	SBR Rubber
LE0A	NOTE: Fluid Code WF (Fire Protection Water) piping identified with this pipe class shall be in accordance with 24590-BOF-3PS-PZ41-T0001, not per this piping material specification. Accordingly, the associated piping and components will be modeled using SpecMaker as this system is to subcontract and therefore does not require PipeWorks stock code materials.									
N11E	ASME B31.3, Category-Normal Fluid Service Highly Corrosive Process Fluids in High Active Cells) (GV) Radioactive Vessel Vent (PF) Cs/Tc Concentrate/ Intermediate Product (PW) Radioactive Gas/ Vapor (WU) Floor Drains (C3 Areas) (ZF) Plant Washings (ZN) Neutral Effluent (ZS) Process Radioactive Condensate	Based on Design 230 @ 100 195 @ 200 175 @ 300 160 @ 400 145 @ 500 140 @ 600	No Flanges	0.0400	UNS N06022 (Hastelloy C-22) ½" – 2", Sch. 40S 3" – 8", Sch. 10S	UNS N06022	UNS N06022	No Valves	No Valves	No Gaskets

Class	Design Code / Fluid Content	Press/Temp Limits Psig @ °F	Flange Pressure Class	Corrosion / Erosion Allow (in.)	Pipe	Large Fittings	Small Fittings	Valve Body	Valve Trim	Gasket
N11F	ASME B31.3, Category-Normal Fluid Service (GR) Radar Guide Tube (GV) Radioactive Vessel Vent (PB) LAW Feed (PC) HLW Feed Slurry (PJ) HLW Melter Feed (PW) Radioactive Gas/ Vapor (WE) Demineralized Water (ZF) Plant Washings (ZH) Acidic Effluent (ZJ) Alkaline Effluent (ZR) Suspect Radioactive Condensate (ZS) Process Radioactive Condensate	Based on Design -14.7/ 230 @ -20/ 100 -14.7/ 195 @ 200 175 @ 300 160 @ 400 Note: -14.7 psig limited to NPS 16 and smaller	CL 150 B16.5	0.0425	UNS N08367 (AL-6XN) ½" – 2", Sch. 40S 3" – 24", Sch 10S 30", Sch 10S	UNS N08367	UNS N08367	UNS N08367/ 316 SS	UNS N08367/ 316 SS	Hastelloy C276 Spiral-Wound/ Graphite Filled
N11G	ASME B31.3,-Category-Normal Fluid Service (DC) Low Pressure Steam (GQ) Process Air (GU) Nitric Acid Fume (GV) Radioactive Vessel Vent (HR) Recovered Nitric Acid (PF) Cs/Tc Concentrate / Intermediate Product (PW) Radioactive Gas / Vapor (ZF) Plant Washings (ZG) Pneumatic Line (ZR) Suspect Radioactive Condensate (ZS) Process radioactive Condensate (ZT) Thermocouple Sheathed Line In-Cell	Based on Design -14.7/ 230 @ -20/ 100 -14.7 / 195 @ 200 -14.7/ 185 @ 250 175 @ 300 160 @ 400	CL 150 B16.5	0.0425	UNS N08367 (AL-6XN) ½" – 2", Sch. 40S 3" – 12", Sch 10S 14" – 20", 0.25" Wall 24", 0 312" Wall	UNS N08367	UNS N08367	UNS N08367	UNS N08367	Hastelloy C276 Spiral-Wound/ Graphite Filled
N11H	ASME B31.3, Category Normal Fluid Service (GV) Radioactive Vessel Vent (PW) Radioactive Gas/ Vapor	Based on Design 230 @ -20/ 100 195 @ 200 175 @ 300 160 @ 400 145 @ 500 140 @ 600	CL 150 B16.5	0.0425	UNS N08367 (AL-6XN) ½" – 2", Sch. 40S 3" – 24", Sch. 10S 30", Sch 10S	UNS N08367	UNS N08367	UNS N08367	UNS N08367	Hastelloy C276 Spiral-Wound/ Graphite Filled

Class	Design Code / Fluid Content	Press/Temp Limits Psig @ °F	Flange Pressure Class	Corrosion / Erosion Allow (in.)	Pipe	Large Fittings	Small Fittings	Valve Body	Valve Trim	Gasket
N11J	ASME B31.3, Category Normal Fluid Service (PW) Radioactive Gas/ Vapor	Based on Design -14.7/ 15 @ 1140	TBD	0.0400	UNS N06625 (Inconel 625) ½" - 4", Sch.40S	UNS N06625	UNS N06625	UNS N06625	UNS N06625	TBD
N11K	ASME B31.3, Category-Normal Fluid Service Highly Corrosive Process Fluids in High Active Cells) (DC) Low Pressure Steam (GQ) Process Air (GR) Radar Guide Tube (GU) Nitric Acid Fume (GV) Radioactive Vessel Vent (PB) LAW Feed (PC) HLW Feed Slurry (PJ) HLW Melter Feed (PW) Radioactive Gas/ Vapor (WE) Demineralized Water (ZE) Plant Wash Fluid (ZF) Plant Washings (ZG) Pnuemercator Line (ZH) Acidic Effluent (ZJ) Alkaline Effluent (ZR) Suspect Radioactive Condensate (ZS) Process Radioactive Condensate (ZT) Thermocouple Sheathed Line In-Cell	Based on Design -14.7/ 230 @ -20/ 100 -14.7/ 195 @ 200 -14.7/ 185 @ 250 175 @ 300 160 @ 400 Note: -14.7 psig limited to NPS 24 and smaller	CL 150 B16.5	0.0425	UNS N08367 (AL-6XN) ½" – 2", Sch. 40S 3" – 12", Sch 10S 14" - 20, 0.250" Nom 24", 0.312" Nom 30", Sch 10S	UNS N08367	UNS N08367	None	None	None
N11V	ASME B31.3, Category Normal Fluid Service (PW) Radioactive Gas/ Vapor	Enveloping Conditions -14.7/ 230 @-20/100 -14.7/ 195 @ 200 -14.7/ 175 @ 300 -14.7/ 160 @ 400 -14.7/ 145 @ 480	CL 150 B16.5	0.0425	UNS N08367 (AL-6XN) ½" – 2", Sch. 40S 3" – 10", Sch. 10S 12", 0.188" Nom 14" - 18", 0.250" Nom 20", 0.312" Nom 24", 0.312" Nom 30", 0.375" Nom	UNS N08367	UNS N08367	UNS N08367	NS N08367	Hastelloy C276 Spiral-Wound/ Graphite Filled

Class	Design Code / Fluid Content	Press/Temp Limits Psig @ °F	Flange Pressure Class	Corrosion / Erosion Allow (in.)	Pipe	Large Fittings	Small Fittings	Valve Body	Valve Trim	Gasket
N13A	ASME B31.3, Category-Normal Fluid Service (GV) Radioactive Vessel Vent (PA) Radwaste Aqueous (PW) Radioactive Gas/ Vapor (ZS) Process Radioactive Condensate	Based on Design 230 @ 100 195 @ 200 175 @ 300 160 @ 400 145 @ 500 140 @ 600	CL 150 B16.5	0.0400	UNS N06022 (Hastelloy C-22) ½" – 2", Sch. 40S 3" – 8", Sch. 10S	UNS N06022	UNS N06022	UNS N06022	UNS N06022/ UHMWPE	Hastelloy C276 Spiral-Wound/ Graphite Filled
N14A	ASME B31.3, Category-Normal Fluid Service For High Erosion Pipe Section in N06022 line (ZF) Plant Washings	Based on Design -14.7/ 150 @ 400	No Flanges	0.125	UNS N06022 (Hastelloy C-22) ½" – 2", Sch. 80S 3" – 8", Sch. 40S	-	-	-	-	No Gaskets
N31C	ASME B31.3, Category-Normal Fluid Service (GQ) Process Air (HN) Nitric Acid (JS) Sodium Hydroxide (PF) Cs/Tc Concentrate/ Intermediate Product (ZF) Plant Washings (ZG) Pneumercator Line (ZS) Process Radioactive Condensate (ZT) Thermocouple Sheathed Line In-Cell	Based on Design -14.7/ 150 @ 350	TBD	0.0400	UNS N06022 (Hastelloy C-22) ½" - 8", Sch 40S 10" - 16", 0.250" Nom	UNS N06022	UNS N06022	UNS N06022	UNS N06022	TBD

Class	Design Code / Fluid Content	Press/Temp Limits Psig @ °F	Flange Pressure Class	Corrosion / Erosion Allow (in.)	Pipe	Large Fittings	Small Fittings	Valve Body	Valve Trim	Gasket
N31D	ASME B31.3, Category-Normal Fluid Service Highly Corrosive Process Fluids in High Active Cells) (GQ) Process Air (HN) Nitric Acid (HR) Recivered Nitric Acid (JS) Sodium Hydroxide (PF) Cs/Tc Concentrate/ Intermediate product (PW) Radioactive Gas/ Vapor (ZF) Plant Washings (ZG) Pneumercator Line (ZS) Process Radioactive Condensate (ZT) Thermocouple Sheathed Line In-Cell	Based on Design -14.7/ 150 @ 350	None	0.0400	UNS N06022 (Hastelloy C-22) ½" - 8", Sch 40S 10" - 16", 0 250" Nom	UNS N06022	UNS N06022	UNS N06022	UNS N06022	None
P10A	Uniform Plumbing Code Underground Services: (WV) Potable Water (ZV) Vacuum (ZZ) Rabbit Transport Line	Based on Design 150 @ 73 124 @ 100 80 @ 120	MFR	0.000	PVC 1" – 2", Sch. 80 3" – 12", Pressure Class 200	PVC	PVC	1" –2", Bronze 3" – 12", Cast Iron/ internally coated	Bronze	Neoprene
P10B	ASME B31.3, Category Normal Fluid Service Underground Services: (WE) Demineralized Water (WP) Process Water (ZA) Non-Dangerous, Non-Radioactive Liquid Effluent	Based on Design 150 @ 73 124 @ 100 80 @ 120	MFR	0.000	PVC 1" – 2", Sch. 80 3" – 12", Pressure Class 200	PVC	PVC	1" –2", Bronze 3" – 12", Cast Iron/ internally coated	Bronze	Neoprene
P10C	ASME B31.3, Category Normal Fluid Service (ZA) Non-Dangerous, Non-Radioactive Liquid Effluent	Based on Design 150 @ 73 150 @ 100 (≤ 8") 142 @ 100 (10" - 12") 110 @ 120 (≤ 6") 92 @ 120 (8" - 12")	MFR	0.000	PVC 12" & Smaller, Sch. 80	PVC	PVC	1" –2", Bronze 3" – 12", Cast Iron/ internally coated	Bronze	EPDM

Class	Design Code / Fluid Content	Press/Temp Limits Psig @ °F	Flange Pressure Class	Corrosion / Erosion Allow (in.)	Pipe	Large Fittings	Small Fittings	Valve Body	Valve Trim	Gasket
P10D	ASME B31.3, Category Normal Fluid Service (WE) Demineralized Water	Based on Design 150 @ 140 Exceptions for threaded joints At 100 F: 150 psig (½" - 1"); 131 psig (1½"); 110 psig (2") At 120 F: 150 psig (1½" - 1"); 113 psig (1½"); 95 psig (2") At 140 F: 150 psig (½"); 143 psig (¾"); 131 psig (1"); 97 psig (1½"), 82 psig (2")	MFR	0.000	PVDF ½" – 2", Sch. 80	-	PVDF	PVDF	PVDF	PVDF Bonded EPDM
PDWV	Uniform Plumbing Code (ZA) Non-Dangerous, Non-Radioactive Liquid Effluent	Gravity Service	None	None	PVC, Sch. 40	PVC, Sch. 40	PVC, Sch. 40	None	None	None
PF0A	NFPA 24 Underground Services: (WF) Fire Protection Water (WR) Raw Water	MFR Rating 175 @ 73 125 @ 100 84 @ 120	MFR	0.000	PVC 4" – 12", AWWA C900 Class 200	DI, Cement Lined AWWA C110	None	DI	By MFR	EPDM
	NOTE: Portion of underground fire protection water (fluid code WF) piping identified with this pipe class is in accordance with 24590-BOF-3PS-PZ41-T0001.									
PG0A	Uniform Plumbing Code Underground Services (WV) Potable Water	150 @ 73 124 @ 100 80 @120	MFR	0.000	PVC 4" 12", AWWA C900 Class 200	DI, Cement Lined AWWA C110	None	DI	By MFR	Neoprene
S10A	ASME B31.3, Category Normal Fluid Service (GA) Argon (GB) Breathing Air (GK) Air, 150 psig (GL) Instrument Air (GQ) Process Air	Based on ASME B16.5 230 @ -20/100 195 @ 200 175 @ 300	CL 150 B16.5	0.000	304L SS ½" –4", Sch. 40S 6" –24", Sch. 10S 30", Sch 10S	304L SS	304L SS	316/ 316L SS	Trim 12	316L SS Spiral-Wound/ Graphite Filled

Class	Design Code / Fluid Content	Press/Temp Limits Psig @ °F	Flange Pressure Class	Corrosion / Erosion Allow (in.)	Pipe	Large Fittings	Small Fittings	Valve Body	Valve Trim	Gasket
S10V	ASME B31.3, Category Normal Fluid Service (ZV) Vacuum	Based on Design -14.7 @ 100	CL 150 B16.5	0.000	304L SS ½" –4", Sch. 40S 6", Sch. 10S	304L SS	304L SS	316/ 316L SS	Trim 12	316L SS Spiral-Wound/ Graphite Filled
S11A	Uniform Plumbing Code (WV) Potable Water	230 @ -20/100 212 @ 150	CL 150	0.0400	316L SS ½" - 4", Sch 40S 6", Sch 10S	316L SS	316L SS	316/316L SS	Trim 12	316L Spiral Wound/ Graphite Filled
S11B	ASME B31.3, Category-Normal Fluid Service In-Cell Piping (including bulges), not containing greater than 20% by weight Nitric Acid, with <2% solids (CD) Carbon Dioxide Liquid/ Gas (DB) High Pressure Steam (DC) Low Pressure Steam (DL) 0-10 Psig Steam (GK) 150 psig Air (GA) Argon (GL) Instrument Air (GN) Nitrogen (GQ) Process Air (GV) Vessel Vent Radioactive (GW) Suspect Radioactive Vent (HN) Nitric Acid (HR) Recovered Nitric Acid (JS) Sodium Hydroxide (PA) Radwaste Aqueous (PB) LAW Feed (PF) Cs/Tc Concentrate/ Intermediate Product (PH) LAW Melter Feed (PP) Ultrafilter Permeate (PW) Radioactive Gas/Vapor (PX) Radioactive Slurry (PZ) Waste Feed (RK) Sodium Permanganate (RQ) Strontium Nitrate (WB) Tower Cooling Water Supply (WC) Tower Cooling Water Return (WE) Demineralized Water	Based on ASME B16.5, CL 150 -14.7/ 230 @ -20/100 -14.7/ 212 @ 150 -14.7/ 195 @ 200 -14.7/ 175 @ 300 -14.7/ 166 @ 360 160 @ 400 140 @ 600 Note: -14.7 psig @ -20F to 360 F is good for NPS 12 and smaller only	CL 150 B16.5	0.0400	316L SS ½" – 4", Sch 40S 6" –24", Sch. 10S 30", 0.375" Nom 36", 0.375" Nom 40", 0.375" Nom	316L SS	316L SS	316L SS	Trim 12	316L SS Spiral-Wound/ Graphite Filled

Class	Design Code / Fluid Content	Press/Temp Limits Psig @ °F	Flange Pressure Class	Corrosion / Erosion Allow (in.)	Pipe	Large Fittings	Small Fittings	Valve Body	Valve Trim	Gasket
	(WK) Chilled Water Supply (WL) Chilled Water Return (WN) Recirculated Chilled Water Suspect Radioactive (WP) Process Water (WS) Recirculated Cooling Suspect Radioactive (WT) Floor Drains (C2 Areas) (WU) Floor Drains (C3 Areas) (ZD) Anti-Foaming Agent (ZE) Plant Wash Fluid (ZF) Plant Washings (ZG) Pneumatic Line (ZH) Acidic Effluent (ZJ) Alkaline Effluent (ZK) Fresh Ion Exchange (IX) Resin (ZL) Spent Ion Exchange (IX) Resin (ZN) Neutral Effluent (ZR) Suspect Radioactive Condensate (ZS) Process Radioactive Condensate (ZT) Thermocouple Sheathed Line In-Cell (ZY) Scrubber Effluent									
S11C	ASME B31.3, Category Normal Fluid Service (DB) High Pressure Steam (DC) Low Pressure Steam (DL) 0 – 10 psig Steam (GK) 150 Psig Air (GL) Instrument Air (GM) Ammonia (GQ) Process Air (GV) Radioactive Vessel Vent (GW) Suspect Radioactive Vent (GZ) Vessel Vent, Non-Radioactive (JS) Sodium Hydroxide (PA) Radwaste Aqueous (PB) LAW Feed	Based on ASME B16.5 -14.7/ 230 @ -20/100 -14.7/ 212 @ 150 -14.7/ 195 @ 200 -14.7/ 175 @ 300 -14.7/ 166 @ 360 160 @ 400 Note: (-14.7 psig @ -20F to 360 F is good for NPS 12 and smaller only	CL 150 B16.5	0.0400	316L SS ½" – 4", Sch. 40S 6" – 14", Sch. 10S 16" – 20", 0.250" Nom 24", 0.312" Nom.	316L SS	316L SS	316/ 316L SS	Trim 12	316L SS Spiral-Wound/ Graphite Filled

Class	Design Code / Fluid Content	Press/Temp Limits Psig @ °F	Flange Pressure Class	Corrosion / Erosion Allow (in.)	Pipe	Large Fittings	Small Fittings	Valve Body	Valve Trim	Gasket
	(PH) LAW Melter Feed (PV) Strontium Carbonate (RK) Sodium Permanganate (WB) Tower Cooling Water Supply (WC) Tower Cooling Water Return (WD) Inhibited Water (WE) Demineralized Water (WG) Recirculated Emergency Cooling, Suspect Radioactive (WK) Chilled Water Supply (WL) Chilled Water Return (WN) Recirculated Chilled Water, Suspect Radioactive (WP) Process Water (WR) Raw Water (WS) Recirculated Cooling Water, Suspect Radioactive (WT) Floor Drains C2 Areas) (WU) Floor Drains (C3 Areas) (ZA) Non-Dangerous, Non-Radioactive Liquid Effluent (ZC) Corrosion Inhibitors (ZD) Antifoam reagent (ZE) Plant Wash Fluid (ZH) Acidic Effluent (ZJ) Alkaline Effluent (ZK) Fresh Ion Exchange (IX) Resin (ZN) Neutral Effluent (ZR) Suspect Radioactive Condensate (ZS) Process Radioactive Condensate (ZU) Non-Radioactive Condensate (ZY) Scrubber Effluent									

Class	Design Code / Fluid Content	Press/Temp Limits Psig @ °F	Flange Pressure Class	Corrosion / Erosion Allow (in.)	Pipe	Large Fittings	Small Fittings	Valve Body	Valve Trim	Gasket
S11E	ASME B31.3, Category Normal FluidService (GA) Argon (GH) Helium (GN) Nitrogen (GV) Radioactive Vessel Vent (PA) Radwaste Aqueous (WT) Floor Drains (C2 Areas) (WU) Floor Drains (C3 Areas) (ZN) Neutral Effluent	Based on ASME B16.5 , Class 150 230 @ -20/100 195 @ 200 175 @ 300	CL 150 B16.5	0.0400	316L SS ½" – 4", Sch. 40S 6" – 14", Sch 10S 16" – 20", 0.250' Nom 24", 0.312" Nom	316L SS	316L SS	316/ 316l SS	Trim 12	316L SS Spiral-Wound/ Graphite Filled
S11F	ASME B31.3, Category-Normal Fluid Service In-Cell Piping (including bulges) with <2% solids that may Contain ≥ 20% by weight Nitric Acid (DB) High Pressure Steam (GQ) Process Air (GV) Radioactive Vessel Vent (HN) Nitric Acid (HR) Recovered Nitric Acid (PA) Radwaste Aqueous (ZC) Corrosion Inhibitor (ZE) Plant Wash Fluid (ZF) Plant Washings (ZG) Pnuemercator Line (ZR) Suspect Radioactive Condensate (ZS) Process Radioactive Condensate (ZT) Thermocouple Sheathed Line In-Cell	Based on ASME B16.5 , Class 150 -14.7/ 230 @ -20/100 -14.7/ 195 @ 200 -14.7/182 @ 265 175 @ 300 166 @ 360 160 @ 400 Note: (-14.7 psig @ -20F to 265F is limited to NPS 12 and smaller	CL 150 B16.5	0.0400	304L SS ½" – 4", Sch. 40S 6" – 24", Sch. 10S	304L SS	304L SS	304L SS	304 SS	316L SS Spiral-Wound /Graphite Filled
S11G	ASME B31.3, Category Normal Fluid Service (XH) Hydraulic Oil (XJ) Transformer Oil (XL) Lubricating Oil	Based on ASME B16.5 230 @ -20/100 195 @ 200	CL 150 B16.5	0.0400	304L SS ½" – 4", Sch. 40S 6" – 10", Sch 10S	304L SS	304L SS	316/ 316L SS	Trim 12	304 SS Spiral-Wound, PTFE Filled

Class	Design Code / Fluid Content	Press/Temp Limits Psig @ °F	Flange Pressure Class	Corrosion / Erosion Allow (in.)	Pipe	Large Fittings	Small Fittings	Valve Body	Valve Trim	Gasket
S11H	ASME B31.3, Category Normal Fluid Service Located In-Cell (GL) Instrument Air (GQ) Process Air	Based on Design 115 @ 225	None	0.0400	316L SS Tubing ½" - 1" OD, 0.083" Nom. Wall		316L SS Tube Fittings	None	None	None
S11K	ASME B31.3, Category Normal Fluid Service (GM) Ammonia (GW) Suspect Radioactive Vent (GZ) Vessel Vent, Non-Radioactive (HN) Nitric Acid (JS) Sodium Hydroxide (PK) Urea Solution (PV) Strontium Carbonate (RH) Hydrogen Peroxide (RK) Sodium Permanganate (RN) Sodium Nitrite (RQ) Strontium Nitrate (WE) Demineralized Water (WP) Process Water (WT) Floor Drains (C2 Areas) (WU) Floor Drains (C3 Areas) (XH) Hydraulic Oil (ZA) Non Dangerous, Non Radioactive Liquid Effluent (ZH) Acidic Effluent (ZK) Fresh Ion Exchange [IX] Resin (ZM) Off-Specification Resin (ZY) Scrubber Effluent	Based on ASME B16.5 -14.7/ 230 @ -20/100 -14.7/195 @ 200 -14.7/ 175 @ 300 Note: -14.7 psig @ -20F to 300F is good for NPS 10 and smaller only	CL 150 B16.5	0.0400	304L SS ½" – 4", Sch. 40S 6" –14", Sch. 10S 16" – 20", 0.250" Nom 24", 0.312" Nom	304L SS	304L SS	316/ 316L SS	Trim 12	316L SS Spiral-Wound /Graphite Filled

Class	Design Code / Fluid Content	Press/Temp Limits Psig @ °F	Flange Pressure Class	Corrosion / Erosion Allow (in.)	Pipe	Large Fittings	Small Fittings	Valve Body	Valve Trim	Gasket
S11M	ASME B31.3,-Category-Normal Fluid Service (FD) Zircon Sand (GV) Radioactive Vessel Vent (GW) Suspect Radioactive Vent (PP) Ultrafilter Permeate (PU) Suspect Radioactive Gas/ Vapor (PW) Radioactive Gas/ Vapor (WE) Demineralized Water (WP) Process Water (WT) Floor Drains (C2 Areas) (ZE) Plant Wash Solvent (ZF) Plant Washings (ZH) Acidic Effluent (ZJ) Alkaline Effluent (ZL) Spent Ion Exchange Resin (ZN) Neutral Effluent (ZR) Suspect Radioactive Condensate (ZS) Process Radioactive Condensate (ZY) Scrubber Effluent	Based on ASME B16.5 230 @ -20/100 195 @ 200 175 @ 300 160 @ 400	CL 150 B16.5	0.0400	316L SS ½" – 4", Sch. 40S 6" – 24", Sch. 10S 30", 0.375" Nom 36", 0.375" Nom 40", 0.375" Nom	316L SS	316L SS	316/ 316L SS	Trim 12	316L SS Spiral-Wound, Graphite Filled
S11N	ASMEB31.3, Category Normal Fluid Service (PW) Radioactive Gas/ Vapor	Based on Design 230 @ -20/100 195 @ 200 140 @ 600 15 @ 1150	CL 150 B16.5	0.0400	316L SS ½" – 4", Sch. 40S 6" – 24", Sch. 10S 30", 0.375" Nom 36", 0.375" Nom 40", 0.375" Nom	316L SS	316L SS	316/ 316L SS	Trim 12	316L SS Spiral-Wound/ Graphite Filled
S11P	ASME B31.3, Category-Normal Fluid Service Located In-Cell (GC) TV-Camera Access (GR) Radar Guide Tube (ZT) Thermocouple Sheathed Line In Cell	Based on ASME B16.5 -14.7/ 230 @ -20/100 -14.7/ 195 @ 200 -14.7/ 192 @ 212 148 @ 480	CL 150 B16.5	0.0400	316L SS ¾" - 1", Sch 10S (ZT Service) ¾" - 1½", 3"Sch 40S (GR Service) 2", Sch. 40S (GC Service)	None	316L	316SS	UHMWPE	316L SS Spiral-wound/ Graphite Filled

Class	Design Code / Fluid Content	Press/Temp Limits Psig @ °F	Flange Pressure Class	Corrosion / Erosion Allow (in.)	Pipe	Large Fittings	Small Fittings	Valve Body	Valve Trim	Gasket
S11R	ASME B31.3, Category Normal Fluid Service (FR) Sucrose (GU) Nitric Acid Fume (GZ) Vessel Vent, Non-Radioactive (HN) Nitric Acid (HR) Recovered Nitric Acid (HT) Citric Acid (SDG3) (WE) Demineralized Water (ZK) Fresh Ion Exchange (IX) Resin	Based on ASME B16.5 -14.7/ 230 @ -20/100 -14.7/ 195 @ 200 -14.7/182 @ 265 Note: -14.7 psig @ -20F to 265F is limited to NPS 12 and smaller)	CL 150 B16.5	0.0400	304L SS ½" – 4", Sch. 40S 6" – 14", Sch 10S 16" – 20", 0.250" Nom 24", 0.312" Nom	304L SS	304L SS	304/ 304L SS	Trim 2	304SS Spiral-Wound /PTFE Filled
S11V	ASME B31.3, Category Normal Fluid Service (PA) Radwaste Aqueous (PW) Radioactive Gas/Vapor (WN) Recirculated Chilled Water Suspect Radioactive	Based on Design -14.7/ 20 @ 675 -14.7/ 166 @ 360	CL 150 B16.5	0.0400	316L SS ½" – 12", Sch. 40S 14" - 24", 0.375" nom	316L SS	316L SS	316/ 316L SS	Trim 12	316L SS Spiral-Wound/ Graphite Filled
S11X	ASME B31.3, Category Normal Fluid Service (GQ) Process Air (GV) Radioactive Vessel Vent (GW) Suspect Radioactive Vent (GX) Building Air Radioactive (GZ) Vessel Vent, Non-Radioactive (JS) Sodium Hydroxide (PP) Ultrafilter Permeate (PU) Suspect Radioactive Gas/ Vapor (PW) Radioactive Gas/Vapor (PX) Radioactive Slurry (WE) Demineralized Water (WT) Floor Drains (C2 Areas) (WU) Floor Drains (C3 Areas) (ZE) Plant Wash Fluid (ZF) Plant Washings (ZS) Process Radioactive Condensate	Based on ASME B16.5 -14.7/ 230 @ -20/100 -14.7/ 195 @ 200 -14.7/ 166 @ 360 -14.7/ 160 @ 400 Note: -14.7 psig @ -20F to 400F is limited to NPS 12 and smaller	CL 150 B16.5	0.0400	316L SS ½" – 4", Sch. 40S 6" – 12", Sch 10S 14" – 20", 0.250" Nom 24", 0.375" Nom 30", 0.375" Nom 36", 0.500" Nom 40", 0 500" Nom	316L SS	316L SS	316 SS	Trim 12	316L SS Spiral-Wound/ Graphite Filled

Class	Design Code / Fluid Content	Press/Temp Limits Psig @ °F	Flange Pressure Class	Corrosion / Erosion Allow (in.)	Pipe	Large Fittings	Small Fittings	Valve Body	Valve Trim	Gasket
S11Y	ASME B31.3, Category Normal Fluid Service (GL) Instrument Air (ZG) Pneumercator Line (ZP) Pneumatic Sample Line (ZQ) Pneumatic Service Line	Based on ASME B16.5 -14.7/ 230 @ -20/100 -14.7/ 195 @ 200 175 @ 300	No Flanges	0.0400	316L SS ½" – 1", Sch. 40S	None	316L SS	316L SS	Trim 12	No Gaskets
S11Z	ASME B31.3, Category Normal Fluid Service In-Cell Piping (including bulges), not containing greater than 20% by weight Nitric Acid, with <2% solids (GQ) Process Air (GV) Vessel Vent Radioactive (GW) Suspect Radioactive Vent (JS) Sodium Hydroxide (PP) Ultrafilter Permeate (PU) Suspect Radioactive Gas/ Vapor (PW) Radioactive Gas/Vapor (PX) Radioactive Slurry (WE) Demineralized Water (WT) Floor Drains (C2 Areas) (WU) Floor Drains (C3 Areas) (ZE) Plant Wash Fluid (ZF) Plant Washings (ZS) Process Radioactive Condensate (ZY) Scrubber Effluent	Based on ASME B16.5 -14.7/ 230 @ -20/100 -14.7/ 195 @ 200 -14.7/ 175 @ 300 -14.7/ 166 @ 360 -14.7/ 160 @ 400 Note: -14.7 psig @ -20F to 400F is limited to NPS 12 and smaller	CL 150 B16.5	0.0400	316L SS ½" – 4", Sch. 40S 6" – 12", Sch 10S 14" – 20", 0.250" Nom 22" - 24", 0.375" Nom 30", 0.375" Nom 36", 0 500" Nom 40", 0.500" Nom	316L SS	316L SS	316L SS	Trim 12	316L SS Spiral-Wound/ Graphite Filled

Class	Design Code / Fluid Content	Press/Temp Limits Psig @ °F	Flange Pressure Class	Corrosion / Erosion Allow (in.)	Pipe	Large Fittings	Small Fittings	Valve Body	Valve Trim	Gasket
S12A	ASME B31.3, Category Normal Fluid Service In-Cell Piping (including bulges), not containing greater than 20% by weight Nitric Acid, with ≥2% solids (GV) Radioactive Vessel Vent (JS) Sodium Hydroxide (PA) Radwaste Aqueous (PB) LAW Feed (PC) HLW Feed Slurry (PH) LAW Melter Feed (PJ) HLW Melter Feed (PX) Radioactive Slurry (PZ) Waste Feed (WE) Demineralized Water (ZF) Plant Washings (ZK) Fresh Ion Exchange (IX) Resin (ZL) Spent Ion Exchange (IX) Resin (ZM) Off-Specification Resin (ZR) Suspect Radioactive Condensate (ZS) Process Radioactive Condensate	Based on ASME B16.5, Class 150 230 @ -20/100 195 @ 200 175 @ 300 166 @ 360 160 @ 400	CL 150 B16.5 (See Pipe Class Note 1060)	0.0937	316L SS ½" – 2", Sch. 80S 2½" – 12", Sch 40S 14" – 24", 0.375" Nom.	316L SS	316L SS	316L SS (See Pipe Class Note 1060)	Trim 12	316L SS Spiral-Wound /Graphite Filled
S12C	ASME B31.3, Category Normal Fluid Service Lines not containing greater than 20% by weight Nitric Acid, with ≥ 2% solids (PA) Radwaste Aqueous (PH) LAW Melter Feed (PX) Radioactive Slurry (PZ) Waste Feed (WE) Demineralized Water (ZS) Process Radioactive Condensate	Based on ASME B16.5 230 @ -20/100 204 @ 175 195 @ 200 175 @ 300 160 @ 400	CL 150 B16.5	0.0937	316L SS ½" – 2", Sch. 80S 3" – 12", Sch 40S 14" – 24", 0.375" Nom	316L SS	316L SS	316/ 316L SS	Trim 12	316L SS Spiral-Wound/ Graphite Filled

Class	Design Code / Fluid Content	Press/Temp Limits Psig @ °F	Flange Pressure Class	Corrosion / Erosion Allow (in.)	Pipe	Large Fittings	Small Fittings	Valve Body	Valve Trim	Gasket
S12D	ASME B31.3, Category Normal Fluid Service In-Cell Piping (including bulges) with ≥2% solids that may Contain ≥ 20% by weight Nitric Acid (PII) LAW Melter Feed (PZ) Waste Feed	Based on ASME B16.5 230 @ -20/100 166 @ 360	No Flanges	0.0937	304L SS ½" –2", Sch. 80S 3" – 12", Sch 40S 14" – 24", 0.375" Nom	304L SS	304L SS	(Later, if necessary)	(Later, if necessary)	No Gaskets
S14A	ASME B31.3, Category Normal Fluid Service In-Cell Piping (including bulges) with high erosion solids that may contain ≥ 20% by weight Nitric Acid (PC) HLW Feed Slurry (PD) SR/TRU Precipitate (PE) Entrained Solids Concentrate (PG) HLW Washed Solids Concentrate (PJ) HLW Melter Feed (PX) Radioactive Slurry	Based on ASME B16.5 230 @ -20/100 166 @ 360 160 @ 400	No Flanges	0.125	304L SS ½" – 1", Sch. 160 1½" – 2", Sch. 80S 3" – 12", Sch. 40S 14" – 24", 0.375" Nom	304L SS	304L SS	(Later, if necessary)	(Later, if necessary)	No Gaskets
S14D	ASME B31.3, Category Normal Fluid Service (FX) Mixed Glass Formers	Based on ASME B16.5 -14.7/ 150 @ 32/ 150	CL 150 B16.5	0.250	316L SS 6" – 8", Sch. 80S	316L SS	316L SS	316 SS	316 SS	316L SS Spiral-Wound/ Graphite Filled

Class	Design Code / Fluid Content	Press/Temp Limits Psig @ °F	Flange Pressure Class	Corrosion / Erosion Allow (in.)	Pipe	Large Fittings	Small Fittings	Valve Body	Valve Trim	Gasket
S14E	ASME B31.3, Category Normal Fluid Service High Erosion Pipe Sections not containing greater than 20% by weight Nitric Acid, (PX) Radioactive Slurry (WD) Inhibited Water (WE) Demineralized Water (WG) Recirculated Emergency Cooling Suspect Radioactive (WS) Recirculated Cooling Suspect Radioactive (ZB) Biocides (ZC) Corrosion Inhibitors (ZR) Suspect Radioactive Condensate (ZS) Process Radioactive Condensate	Based on ASME B16.5 230 @ -20/100 166 @ 360	No Flanges	0.125	316L SS ½" – 1", Sch. 160 1½" – 2", Sch. 80S 3" – 12", Sch. 40S 14" – 20", 0.375" nom	-	-	-	-	No Gaskets
S14F	ASME B31.3, Category Normal Fluid Service In-Cell, High Erosion Pipe Sections not containing greater than 20% by weight Nitric Acid, (PF) Cs/Tc Concentrate/ Intermediate Product (ZG) Pneumercator Line	Based on ASME B16.5 230 @ -20/100 166 @ 360	No Flanges	0.125	316L SS ½" – 1", Sch. 160 1½" – 2", Sch. 80S 3" – 12", Sch. 40S 14" – 24", 0.375" nom	-	-	-	-	No Gaskets
S30B	ASME B31.3, Category Normal Fluid Service Underground Service (GM) Ammonia	Based on design 300 @ -50 360 @ 150	No Flanges	0.0400	304L SS 1" – 2", Sch. 40S	NONE	304L SS	NONE	NONE	No Gaskets
S30J	ASME B31.3, Category Normal Fluid Service (CD) Carbon Dioxide Liquid/ Gas (GM) Ammonia (ZX) Special Decontaminant	Based on design 300 @ -50 360 @ 150	CL 300 B16.5	0.0400	304L SS ½" –12", Sch. 40S	304L SS	304L SS	316/ 316L SS	Trim 12	316L SS Spiral-Wound/ Graphite Filled

Class	Design Code / Fluid Content	Press/Temp Limits Psig @ °F	Flange Pressure Class	Corrosion / Erosion Allow (in.)	Pipe	Large Fittings	Small Fittings	Valve Body	Valve Trim	Gasket
S31H	ASME B31.3, Category Normal Fluid Service In-Cell Piping (including bulges), not containing greater than 20% by weight Nitric Acid, with <2% solids (DB) High Pressure Steam (WS) Recirculated Cooling Water, Suspect Radioactive (ZF) Plant Washings	Based on ASME B16.5 600 @ -20/100 505 @ 200 455 @ 300 415 @ 400 380 @ 500 360 @ 600	CL 300 B16.5	0.0400	316L SS ½" – 12", Sch. 40S	316L SS	316L SS	316 SS	Trim 12	316L SS Spiral-Wound/ Graphite Filled
S31U	ASME B31.3, Category Normal Fluid Service In-Cell Piping (including bulges) with <2% solids that may Contain ≥ 20% by weight Nitric Acid	Based on ASME B16.5 600 @ -20/100 500 @ 215	No Flanges	0.0400	304L SS ½" – 12", Sch. 40S	304L SS	304L SS	(Later, if necessary)	(Later, if necessary)	No Gaskets
S32A	ASME B31.3, Category Normal Fluid Service In-Cell Piping (including bulges), not containing greater than 20% by weight Nitric Acid, with ≥2% solids (GQ) Process Air (GW) Suspect Radioactive Vent (PH) LAW Melter Feed (PX) Radioactive Slurry (PZ) Waste Feed (ZF) Plant Washings (ZG) Pneumercator Line (ZH) Acidic Effluent (ZN) Neutral Effluent (ZS) Process Radioactive Condensate (ZX) Special Decontaminant (ZY) Scrubber Effluent	Based on ASME B16.5 600 @ -20/100 505 @ 200 500 @ 215 455 @ 300	No Flanges	0.0937	316L SS ½" - ¾", Sch 160 1" – 4", Sch 80S 6" – 12", Sch 40S 14", 0.406" Nom. 16", 0.438" Nom 18", 0.500" Nom 20", 0.562" Nom 24", 0.594" Nom.	316L SS	316L SS	(Later, if necessary)	(Later, if necessary)	No Gaskets

Class	Design Code / Fluid Content	Press/Temp Limits Psig @ °F	Flange Pressure Class	Corrosion / Erosion Allow (in.)	Pipe	Large Fittings	Small Fittings	Valve Body	Valve Trim	Gasket
S32B	ASME B31.3, Category Normal Fluid Service Lines not containing greater than 20% by weight Nitric Acid, with ≥ 2% Solids) (PB) LAW Feed (PC) HLW Feed Slurry (PE) Entrained Solids Concentrate (PH) LAW Melter Feed (PJ) HLW Melter Feed (PX) Radioactive Slurry (WU) Floor Drains (C3 Areas) (ZF) Plant Washings (ZL) Spent Ion Exchange (IX) Resin (ZN) Neutral Effluent (ZS) Process Radioactive Condensate	Double Containment Pipe								
	CARRIER	Based on Design 400 @ 300	No Flanges	0.0937 0.0650 for gravity drain lines	316L SS 1" - 2", Sch. 80S 1" - 2", Sch 40S (Gravity drain lines only) 3" - 8", Sch. 40S	316L SS	None	No Valves	No Valves	No Gaskets
	ENCASEMENT (JACKET)	Based on Design 50 @ 104 to 200	No Flanges	0.0000	Carbon Steel, A106 Gr. B 3" - 10"", STD	Carbon Steel, A105	Carbon Steel, A105	No Valves	No Valves	No Gaskets
S32C	ASME B31.3, Category Normal Fluid Service In-Cell Piping (including bulges) with ≥2% solids that may Contain ≥ 20% by weight Nitric Acid	Based on ASME B16.5 600 @ -20/100 500 @ 215	No Flanges	0.0937	304L SS ½" - ¾", Sch 160 1" – 4", Sch 80S 6" – 12", Sch 40S 14", 0.406" Nom. 16", 0.438" Nom 18", 0.500" Nom 20", 0.562" Nom 24", 0.594" Nom.	304L SS	304L SS	(Later, if necessary)	(Later, if necessary)	No Gaskets

Class	Design Code / Fluid Content	Press/Temp Limits Psig @ °F	Flange Pressure Class	Corrosion / Erosion Allow (in.)	Pipe	Large Fittings	Small Fittings	Valve Body	Valve Trim	Gasket
S32D	ASME B31.3, Category Normal Fluid Service In-Cell Piping (including bulges), not containing greater than 20% by weight Nitric Acid, with ≥2% solids (GQ) Process Air (GW) Suspect Radioactive Vent (PH) LAW Melter Feed (PX) Radioactive Slurry (PZ) Waste Feed (ZF) Plant Washings (ZH) Acidic Effluent (ZN) Neutral Effluent (ZS) Process Radioactive Condensate (ZY) Scrubber Effluent	Based on ASME B16.5 500 @ 215	No Flanges	0.0937	316L SS ½", Sch 160 ¾" – 2", Sch 80S 3" - 4", Sch. 40S	316L SS	316L SS	316L SS	Trim 12	No Gaskets
S61A	ASME B31.3, Category Normal Fluid Service (PZ) Waste Feed	Based on Design 1000 @ 200	No Flanges	0.016	304L SS 2" - 3", Sch. 40S	None	None	None	None	No Gaskets
SJ0E	ASME B31.3, Category Normal Fluid Service (GL) Instrument Air (GN) Nitrogen	Based on ASME B16.5 3000 @ -20/100 2530 @ 200	CL 1500 B16.5	0.000	304L SS ½" – 1", Sch. 80S 1½", 0.250" Nom 2", 0.312" Nom 3", 0.438" Nom	304L SS	304L SS	316/ 316L SS	Trim 12	Soft Iron RTJ/
SK0H	ASME B31.3, Category Normal Fluid Service (XH) Hydraulic Oil	Based on Design 4000 @ 145	No Flanges	0.000	316/ 316L SS Tubing ½" OD x 0.065" Wall ¾" OD x 0.095" Wall 1" OD x 0.120" Wall 1¼" x 0.156" Wall 1½" x 0 188" Wall	None	316/316L SS	None	None	No Gaskets

Class	Design Code / Fluid Content	Press/Temp Limits Psig @ °F	Flange Pressure Class	Corrosion / Erosion Allow (in.)	Pipe	Large Fittings	Small Fittings	Valve Body	Valve Trim	Gasket
T11A	ASME B31.3, Category Normal Fluid Service (DB) High Pressure Steam (GQ) Process Air (HC) Cerium Decontaminant (HN) Nitric Acid (PA) Radwaste Aqueous (RD) Sodium Hypochlorite (WC) Tower Cooling Water Return (WD) Inhibited Water (WS) Recirculated Cooling Water, Suspect Radioactive (ZG) Pneumercator Line (ZR) Suspect Radioactive Condensate (ZT) Thermocouple Sheathed Line In-Cell (ZX) Special Decontaminant	Based on Design 230 @100 195 @ 200 175 @ 300 160 @ 400	Cl 150 B16.5* *316/ 316L SS lap joint flange	0.0400	Titanium ½" – 2", Sch. 40S 3" – 6", Sch. 10S	Titanium	Titanium	Titanium	Titanium	Titanium "Helicoflex"
W11A	ASME B31.3, Category Normal Fluid Service (ZF) Plant Washings (ZN) Neutral Effluent (ZR) Suspect Radioactive Condensate (ZS) Process Radioactive Condensate	Double Containment Pipe								
	CARRIER	Based on Design -14.7/ 230 @ -20 /100 -14.7/ 195 @ 200	No Flanges	0.0425	UNS N08367 (AL-6XN) 2" – 4", Sch 40S	UNS N08367	-	-	-	No Gaskets
	ENCASEMENT (JACKET)	Based on Design 50 @ 104 to 200	No Flanges	0.0000	316L SS 4" – 6" , Sch 40S	316L SS	316L SS	-	-	No Gaskets

Class	Design Code / Fluid Content	Press/Temp Limits Psig @ °F	Flange Pressure Class	Corrosion / Erosion Allow (in.)	Pipe	Large Fittings	Small Fittings	Valve Body	Valve Trim	Gasket
W11B	ASME B31.3, Category Normal Fluid Service (PA) Radwaste Aqueous (WU) Floor Drains (C3 Areas) (ZN) Neutral Effluent	Double Containment Pipe								
	CARRIER	Based on Design 100 @ 215	No Flanges	0.0400	UNS N06022 (Hastelloy C-22) 1½" - 4", Sch 40S	UNS N06022	-	-	-	No Gaskets
	ENCASEMENT (JACKET)	Based on Design 50 @ 104 to 200	No Flanges	0.000	Carbon Steel, A106 Gr B 4" – 6", STD	CS	CS			No Gaskets
W31A	ASME B31.3, Category Normal Fluid Service Lines not containing greater than 20% by weight Nitric Acid, with <2% Solids (PA) Radwaste Aqueous (PF) Cs/Tc Concentrate / Intermediate Product (PH) LAW Melter Feed (ZF) Plant Washings (ZH) Acidic Effluent (ZJ) Alkaline Effluent (ZN) Neutral Effluent (ZS) Process Radioactive Condensate (ZY) Scrubber Effluent	Double Containment Pipe								
	CARRIER	Based on Design 600 @ -20/100 505 @ 200 455 @ 300 415 @ 400	No Flanges	0.0425	316L SS 3"- 4", Sch. 40S	316L SS	None	No Valves	No Valves	No Gaskets
	ENCASEMENT (JACKET)	Based on Design 50 @ 104 to 200	No Flanges	0.0000	Carbon Steel, A106 Gr. B 6" -12", STD	Carbon Steel	Carbon Steel	Later, if necessary	Later, if necessary	No Gaskets

Class	Design Code / Fluid Content	Press/Temp Limits Psig @ °F	Flange Pressure Class	Corrosion / Erosion Allow (in.)	Pipe	Large Fittings	Small Fittings	Valve Body	Valve Trim	Gasket
W32A	ASME B31.3, Category Normal Fluid Service (PA) Radwaste Aqueous (PB) LAW Feed (PC) HLW Feed Slurry (ZF) Plant Washings (ZH) Acidic Effluent (ZS) Process Radioactive Condensate	Double Containment Pipe								
	CARRIER	Based on Design 400 @ 300 -14.7/400 @ 20/100	No Flanges	0.0937 0.0650 for gravity drain lines	316L SS 1" - 2", Sch 80S 3" - 4", Sch 40S 1" - 2", Sch 40S (for gravity drain lines only)	-	-	None	None	No Gaskets
	ENCASEMENT (JACKET)	Based on Design 50 @ 104 to 200	No Flanges	0.000	316LSS 3" – 6", Sch 40S	316L SS	-	None	None	No Gaskets
W62F	ASME B31.3, Category Normal Fluid Service (PZ) Waste Feed (ZH) Acidic Effluent	Double Containment Pipe								
	CARRIER	Based on Design 1000 @ 200	No Flanges	0.0160	304L SS 3", Sch. 40S	304L SS	-	None	None	No Gaskets
	ENCASEMENT (JACKET)	Based on Design 50 @ 104 to 200	No Flanges	0.0000	Carbon Steel, A106 Gr. B 6", STD	Carbon Steel, A105	Carbon Steel, A105	Later, if necessary	Later, if necessary	No Gaskets

Attachment 51 – Appendix 7.5

WTP Common
Civil, Structural, and Architectural Criteria and Typical Design Details

The following drawings have been incorporated into Appendix 7.5 and can be viewed at the Ecology Richland Office. **New drawings are in bold lettering.**

Drawing/Document Number	**Description**
24590-WTP-PER-CSA-02-001, Rev 7	Secondary Containment Design
24590-WTP-PER-J-02-001, Rev 4	Leak Detection – Sump Level Measurement in Secondary Containment Systems
24590-WTP-PER-J-02-002, Rev 3	Low-Point Leak Detection in Secondary Containment Systems including Buried Co-Axial Transfer Lines
24590-WTP-PER-PS-02-001, Rev 4	Ancillary Equipment Pipe Support Design
RESERVED	RESERVED

R10572831

Document title: **Secondary Containment Design**

Contract number: DE-AC27-01RV14136

Department: Civil/Structural/Architectural

Author(s): Nathan Kyle

ISSUED BY
RPP-WTP PDC

Principal author signature:

Document number: 24590-WTP-PER-CSA-02-001, Rev 7

Checked by: MAK 5/19/05 ~~Mark Braccia~~ LARRY BENSON

Checker signature: Larry B. Benson

Date of issue: 5/19/05

Issue status: Issued for Permitting Use

Approved by: Mark A. Scott, P.E., S.E.

Approver's position: Senior Engineer

Approver signature:

MARK A. SCOTT
STATE OF WASHINGTON
19183
REGISTERED
PROFESSIONAL ENGINEER
EXPIRES 04/01/06

05/19/05

River Protection Project
Waste Treatment Plant
2435 Stevens Center Place
Richland, WA 99352
United States of America
Tel: 509 371 2000

Notice

Please note that source, special nuclear, and byproduct materials, as defined in the *Atomic Energy Act of 1954* (AEA), are regulated at the US Department of Energy (DOE) facilities exclusively by DOE acting pursuant to its AEA authority. DOE asserts, that pursuant to the AEA, it has sole and exclusive responsibility and authority to regulate source, special nuclear, and byproduct materials at DOE-owned nuclear facilities. Information contained herein on radionuclides is provided for process description purposes only.

History Sheet

Rev	Date	Reason for revision	Revised by
0	6/24/02	Initial issue	Indra Ghosh
1	9/26/02	Issued for Permitting Use	Indra Ghosh / N. T. Desai
2	10/09/02	• Revised text in Section 1 • Added Yard Transfer Lines structural support description. • Changed material type from 304L to 316L on Fig. 4. • Added Reference to "LAB" building in all sections	Indra Ghosh / N. T. Desai
3	3/27/03	• Revised Figures 1, 2, 3 and 4, and deleted Figure 5 • Replaced Ref. 2.1.5 with Washington Administrative Code • Editorial changes in Section 3.1 as marked. • Issued for Permitting Use	Indra Ghosh / N. T. Desai
4	2/12/04	• Addition of AEA Statement • Editorial changes in Section 3.2 as marked. • Revise Figure 1 to reflect changes to LAW vessel skirt • Deleted reference to the Lab in Figure 3 • Addition of Figure 5 describing the typical Laboratory vessel support details • Addition of Figures 6 and 7 providing typical Laboratory under sink and fume hood drain secondary containment drip pan details Addition of Figure 8 describing typical Laboratory piping and pump pit sump weir details	Harsh Raval
5	8/4/04	Issued for Permitting Use	H. Raval/D. Robertson
6	8/25/04	Issued for Permitting Use	H. Raval/D. Robertson

History Sheet *(Cont.)*

Rev	Date	Reason for revision	Revised by
7	5/19/05	• Revised Section 3.1, Seismic Peak Ground Acceleration. • Corrected specification callout on Figure 1 • Revised typical PT sump and typical wall/mat penetration details on Figure 4 • Revised Note 3 and revised details on Figure 7 • General revision to Figure 8 (Added Details 1 and 2) • Revised Notes 3 and 4 for cupsink detail, and revised hot cell transfer port drain details on Figure 9. Added Note 5 for cupsink cover. • Revised Note 3, added Note 4 to embed plate detail on Figure 10. Added adjacent embed plate optional detail. • Added Figures 11 and 12. Issued for Permitting Use	Nathan Kyle

• Contents

1 Introduction 1
2 Applicable Documents 1
2.1 Codes and Standards 1
3 Description 1
3.1 Design Methodology, Material, Loads, and Load Combinations 1
3.2 Typical Details 2

Figures

Figure 1 Typical Vessel Embed, Support, and Flat Bottom Tank Details for LAW Building 3
Figure 2 Liner Plate and Grillage Support Details for PT, HLW, LAW and LAB Buildings 4
Figure 3 Typical Process Vessel Support Details for PT and HLW Buildings 5
Figure 4 Misc. Typical Details Sumps, Trenches, Wall Penetrations, Embedded Plates and Special Protective Coating PT, HLW, LAW and LAB Buildings 6
Figure 5 Typical Process Vessel Support Details for LAB Building 7
Figure 6 Plan View of Typical Under Sink and Fume Hood Drain for LAB Bldg Secondary Containment Leak Collection Pan 8
Figure 7 Section View of Typical Laboratory Under Sink and Fume Hood Drain for LAB Bldg Secondary Containment Leak Collection Pan, Including Leak Test Plug 9
Figure 8 Typical Laboratory Piping and Pump Pit Sump and Weir Details for LAB Building 10
Figure 9 Typical Hot Cell Floor Drain Detail and Transfer Port Drain Detail for LAB Building 11
Figure 10 Typical HLW Building Sump Details & Typical PT Building SS Liner/CS Embed Detail 12
Figure 11 Typical Laboratory C3 Piping and Pump Pit Sump and Weir Details for LAB Building 13
Figure 12 Typical RLD Condensate Tank Support Details for PT Building (Exterior) 14

1 Introduction

In accordance with Chapter 173-303 Washington Administrative Code (Ref. 2.1.5), facilities that manage liquid dangerous waste must use secondary containment. At the Waste Treatment and Immobilization Plant, secondary containment systems have been designed to prevent the release of dangerous waste as required by the Code.

This report describes and provides references to the design criteria, load definitions, load combinations, material of construction, and methodology for the analysis/design of Pretreatment (PT), High-Level Waste (HLW), Low-Activity Waste (LAW) facilities, and Analytical Laboratory (LAB) building with emphasis on secondary containment components. It also includes several representative typical details.

2 Applicable Documents

2.1 Codes and Standards

2.1.1 ACI 349, *Code Requirements for Nuclear Safety-Related Concrete Structures.*

2.1.2 ACI 318, *Code Requirements for Structural Concrete.*

2.1.3 *Uniform Building Code* (UBC), 1997.

2.1.4 ANSI/AISC N690, *Specification for the Design, Fabrication, and Erection of Steel Safety-Related Structures for Nuclear Facilities.*

2.1.5 Washington Administrative Code, Chapter 173-303.

2.1.6 AISC M016-89, *Manual of Steel Construction – Allowable Stress Design, Ninth Edition.*

2.1.7 ASCE 7, *Minimum Design Loads for Buildings and Other Structures.*

2.1.8 ASCE 4, *Seismic Analysis of Safety-Related Nuclear Structures and Commentary.*

2.1.9 *Safety Requirements Document, Volume II*, 24590-WTP-SRD-ESH-01-001-02.

3 Description

3.1 Design Methodology, Material, Loads, and Load Combinations

Methodology	Codes and specifications: • PT and HLW: General: ASCE 4 (Ref. 2.1.8). Concrete: ACI 349 (Ref. 2.1.1). Steel: ANSI/AISC N690 (Ref. 2.1.4) and AISC (Ref. 2.1.5). • LAW and LAB: General: UBC (Ref. 2.1.3). Concrete: ACI 318 (Ref. 2.1.2). Steel: AISC M016 (Ref. 2.1.6).
Dead Loads and Live loads:	ASCE 7 (Ref. 2.1.7), UBC (Ref. 2.1.3), and Tables 4-1 and 4-2 of SRD (Ref. 2.1.9).

Seismic Loads	Site-specific response spectra as specified in SRD (Ref. 2.1.9). • PT and HLW: Peak Ground Horizontal Acceleration = 0.36g. Peak Ground Vertical Acceleration = 0.25g. • LAW and LAB: Seismic Zone 2B (UBC, Ref. 2.1.3). Peak Ground Horizontal Acceleration = 0.24g. Peak Ground Vertical Acceleration = 0.16g.
Material	
• Concrete	28-day compressive strength, f_c' = 4,000 psi and 5,000 psi.
• Reinforcing Bar	ASTM A706, deformed.
• Steel	W Shape – ASTM A992 or A572 Grade 50; Angles and Channels - ASTM A36 or A529 Grade 50; Plates – ASTM A36; Pipe – ASTM A53; Anchor Rods – ASTM F1554; Welded studs A108; Steel deck – ASTM A653.
Load Combinations	
• Concrete	• HLW and PT: Based on ACI 349 (Ref. 2.1.1). • LAW and LAB: ACI 318 (Ref. 2.1.2) and UBC (Ref. 2.1.3).
• Steel	• HLW and PT: Based on ANSI/AISC N690 (Ref. 2.1.4). • LAW and LAB: AISC M016-89 (Ref. 2.1.6) and UBC (Ref. 2.1.3).
Stainless Steel Liners	Most commonly used in the process cells. Refer to Figures 2–5 for typical details.
Special Protective Coating	Material for coatings will be compatible with the dangerous waste.
Yard Transfer Lines Structural Support	Structural support for yard transfer lines (intra and inter facility waste transfer lines) is described in Ancillary Equipment Pipe Support Design, 24590-WTP-PER-PS-02-001.

3.2 Typical Details

Figures 1 through 12 show several typical details related to secondary containment for PT, HLW, LAW, and LAB buildings.

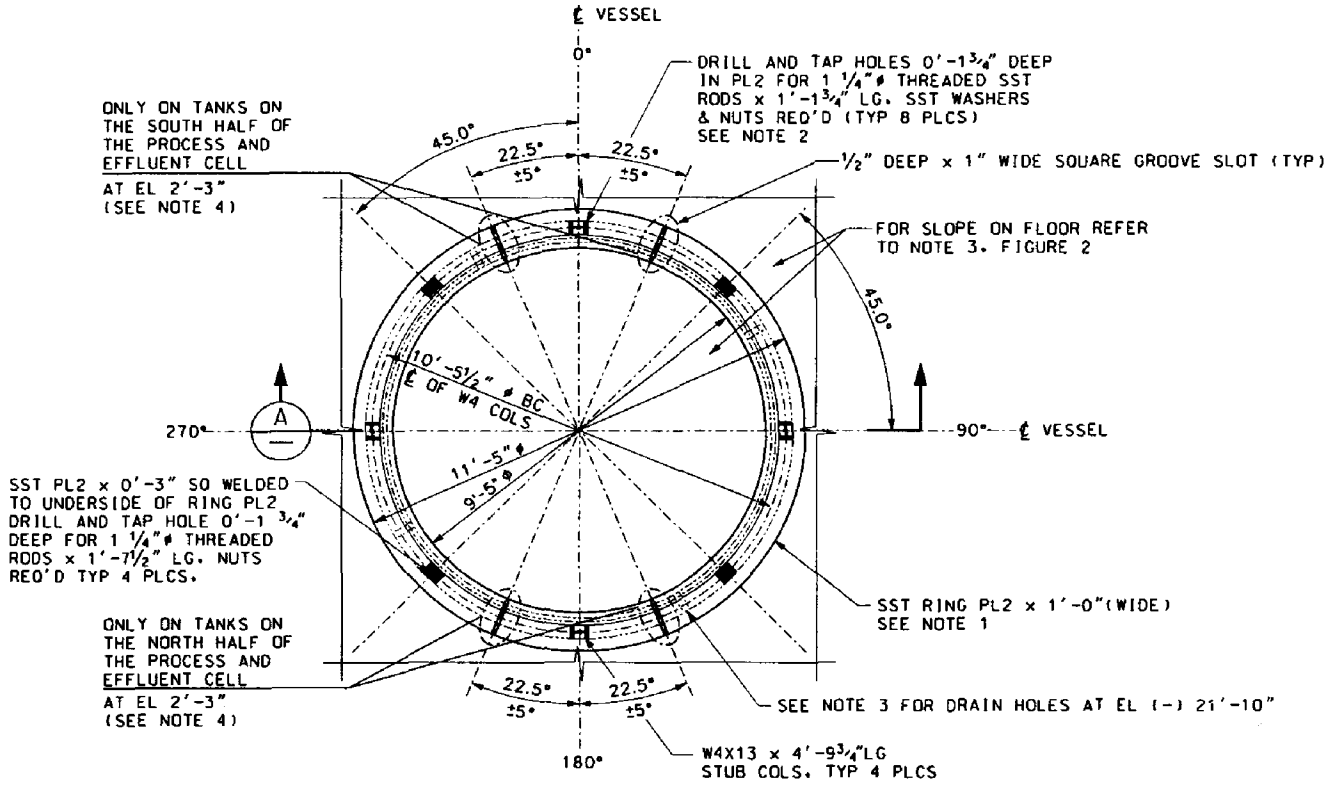

TYPICAL VESSEL RING SUPPORT - PLAN VIEW

NOTES

1. STAINLESS STEEL MATERIAL:
   - ASTM A240, TYPE 304L FOR ANNULAR RING
   - ASTM A193, GRADE B8 FOR THREADED RODS
   - ASTM A194, GRADE 8 FOR HEAVY HEX NUTS
   - CONFORM TO F844, TYPE 304L FOR WASHERS
2. CARBON STEEL MATERIAL:
   - ASTM A992 FOR WIDE FLANGES
   - ASTM A36 FOR PLATES AND SHAPES (EXCEPT WIDE FLANGES)
   - ASTM F1554, GRADE 36, PLAIN FOR ANCHOR BOLTS
   - (THREADED ROD)
   - ASTM A 563, GRADE A HEAVY HEX, PLAIN FOR NUTS ANSI B1.1, CLASS 2A FIT FOR THREADS (UNC)
3. FOR THE ELEV (-) 21'-0" TANK, FOUR DRAIN HOLES SHALL BE PROVIDED ON THE SKIRT AND SKIRT BASE PLATE THE DRAIN HOLE SHALL BE FORMED BY REMOVING A 2-INCH WIDE STRIP FROM THE SKIRT RING, AND A 1-INCH RADIUS HALF-HOLE FROM THE SKIRT. DRAIN HOLES SHALL BE LOCATED AT 60°, 150°, 240°, AND 330° ORIENTATIONS.
4. FOR THE TANKS AT NOMINAL ELEV (+) 2'-0", TWO DRAIN SLOTS SHALL BE PROVIDED IN THE BASE RING TO ALLOW DRAINAGE TO THE LOW SIDE LINER PLATE EXTERIOR TO THE TANK.

C3/C5 COLLECTION VESSEL EMBED ASSEMBLY

SECTION A

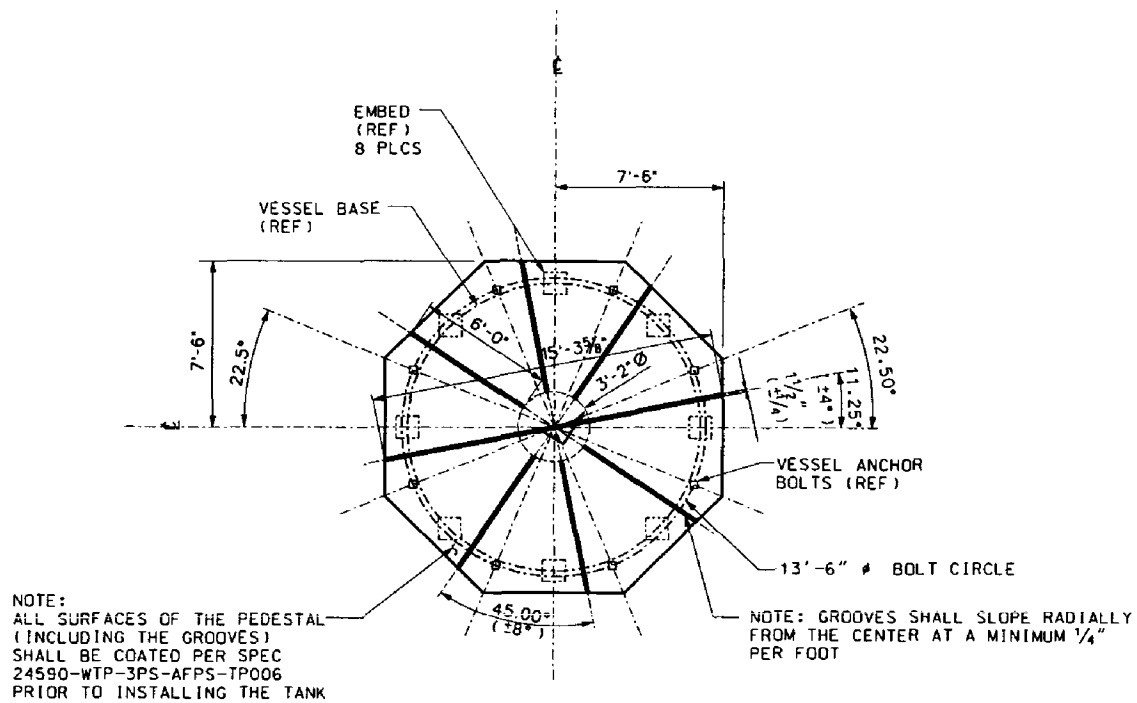

CAUSTIC COLLECTION TANK

FIGURE 1

TYPICAL VESSEL EMBED, SUPPORT, AND FLAT BOTTOM TANK DETAILS FOR LAW BUILDING

NOTES:

1. EMBEDMENT MATERIALS SHALL CONFORM TO THE FOLLOWING:
   - ASTM A36 FOR PLATES, ANGLES
   - ASTM A992 FOR WT SECTIONS
   - ASTM A108 FOR WELDED STUDS
   - NO COATING REQUIRED (BARE STEEL)
2. LINER PLATE MATERIAL:
   - ASTM A240 TYPE 304L
3. THE FLOOR LINER PLATE SHALL BE SLOPED MIN 1% (OUTSIDE OF THE TANK PERIMETER & ALSO DIRECTLY UNDER THE TANK).
4. IN PT BUILDING THERE IS 4,000 PSI CONCRETE FILL BETWEEN THE TOP OF CONCRETE AND SS LINER PLATE.

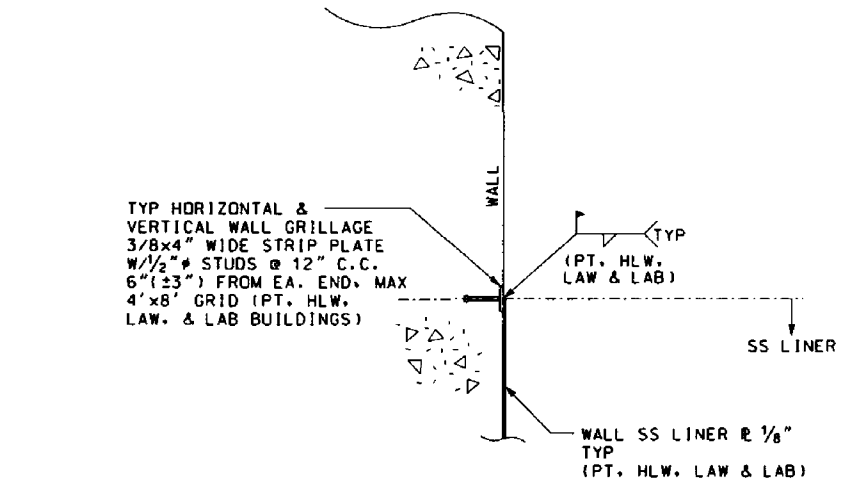

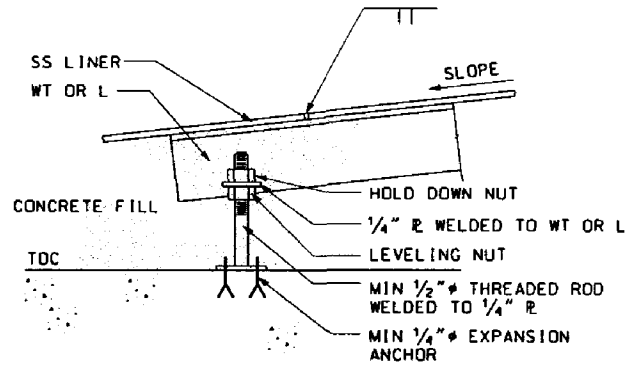

FLOOR LINER GRILLAGE DETAIL
PT BLDG

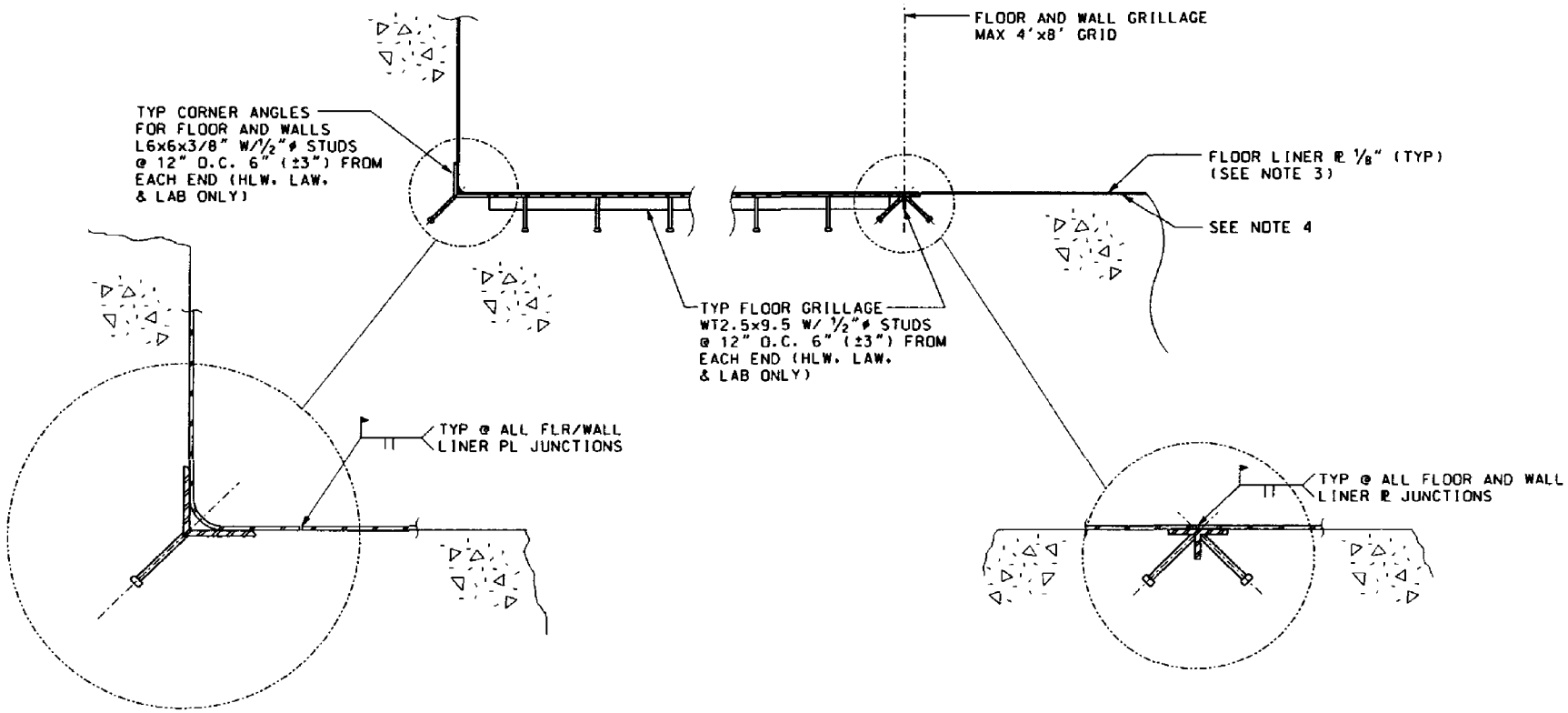

FIGURE 2

LINER PLATE AND GRILLAGE SUPPORT DETAILS FOR PT, HLW, LAW & LAB BUILDINGS

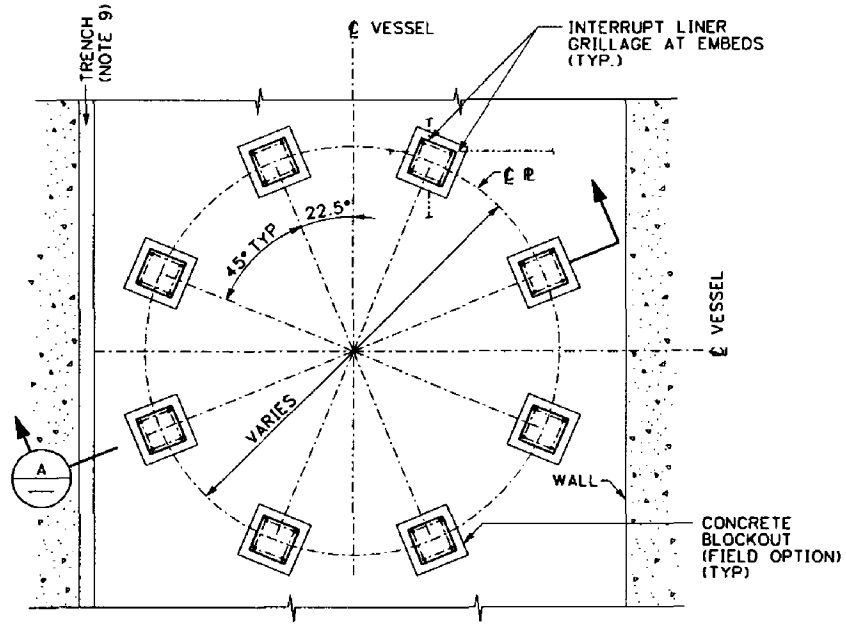

PLAN - HLW BUILDING

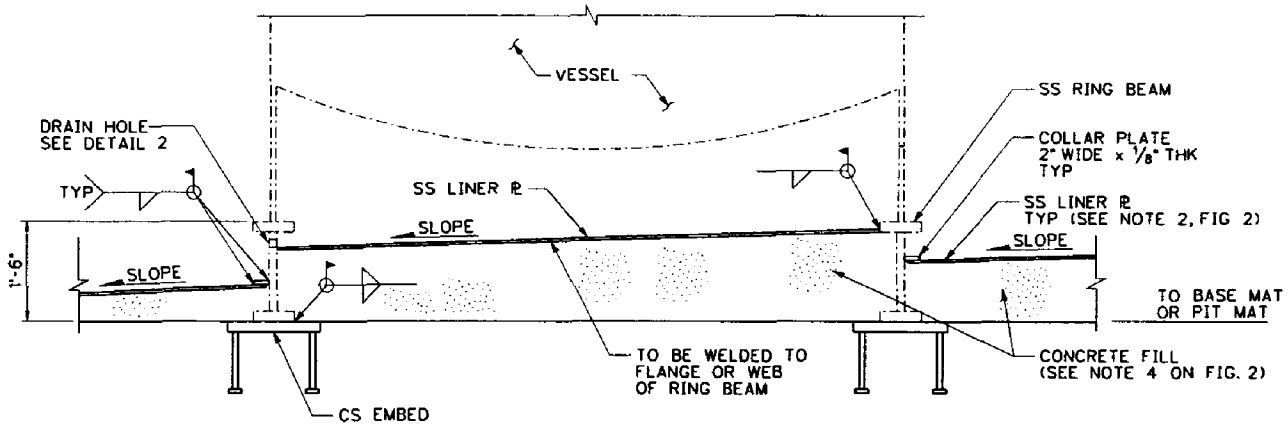

VESSEL SUPPORT ON RING BEAM
PT BLDG

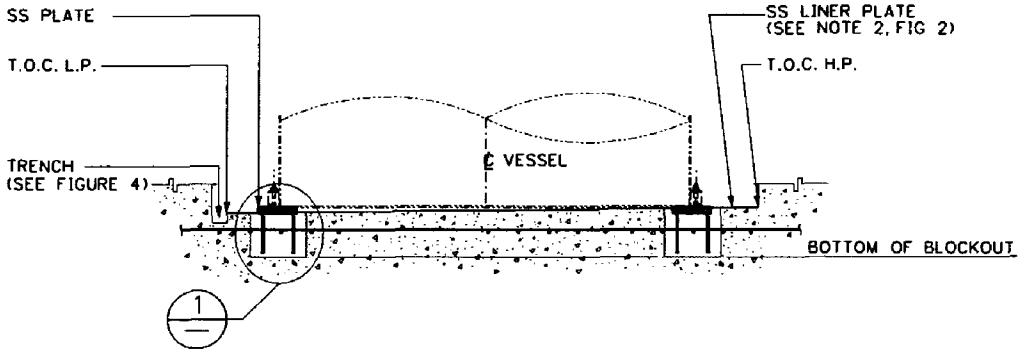

SECTION A

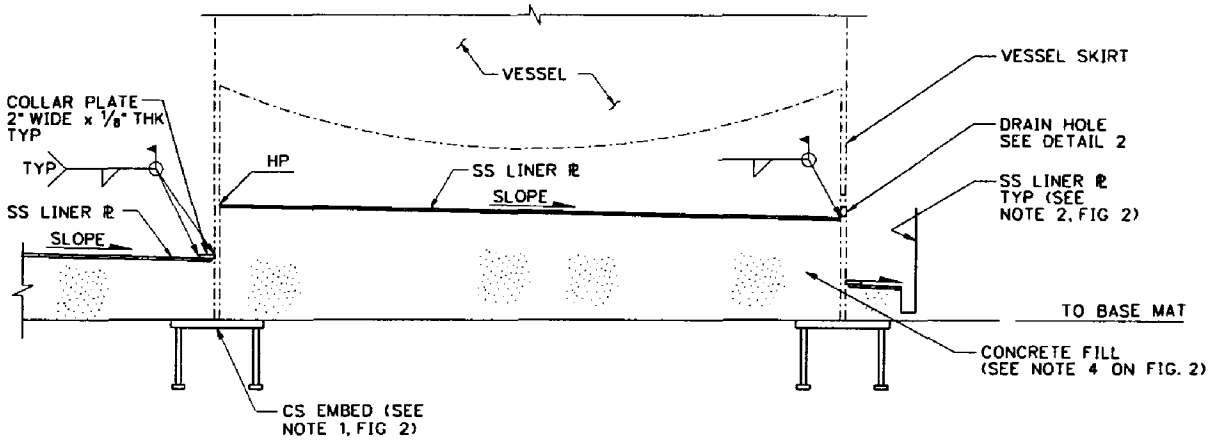

VESSEL SUPPORT ON SKIRT
PT BLDG

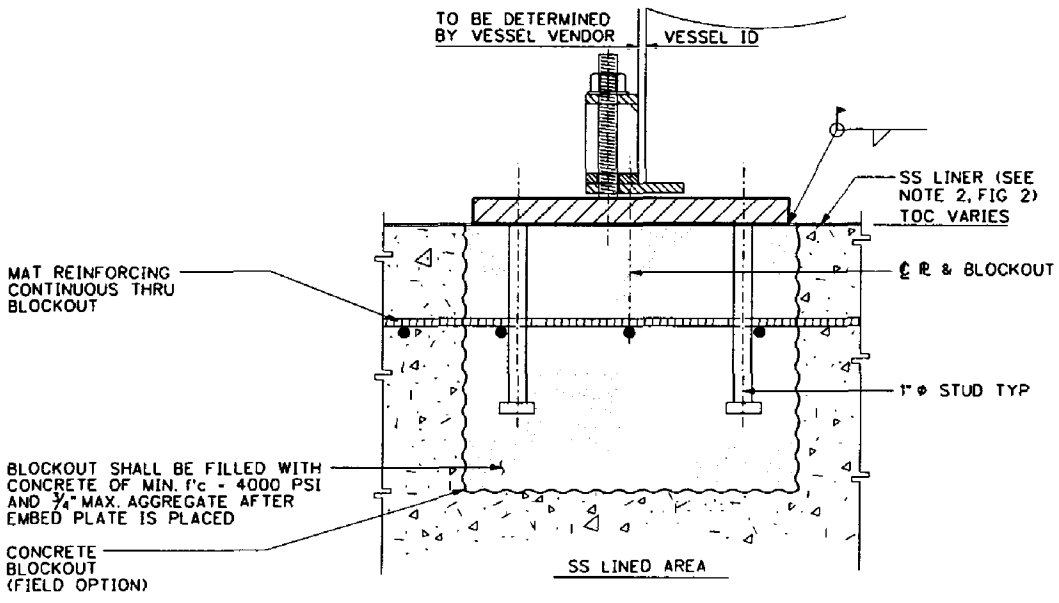

DETAIL 1
HLW EMBED DETAIL

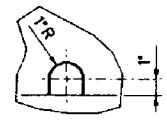

NOTE: ONLY ONE HOLE TO BE LOCATED AT THE LOWEST POINT OF THE INNER LINER PLATE.

DETAIL 2
SCALE: NONE

NOTES HLW DETAIL 1:

1. STAINLESS STEEL MATERIAL:
   - ASTM A240, TYPE 316L FOR PLATES
2. CARBON STEEL MATERIAL:
   - ASTM A36 FOR PLATES
   - ASTM A108 FOR STUD ANCHORS

FIGURE 3

TYPICAL PROCESS VESSEL SUPPORT DETAILS FOR PT & HLW BUILDINGS

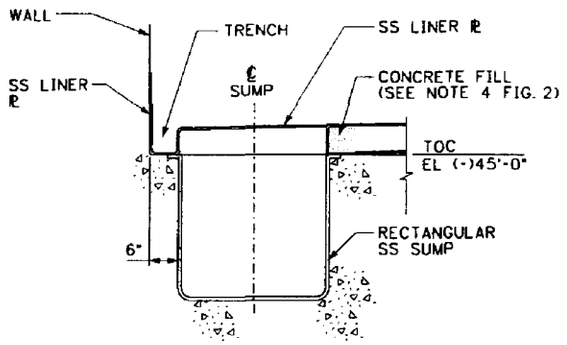

SECTION THRU TRENCH & SUMP
@ EL (-)45'-0" - PT BLDG

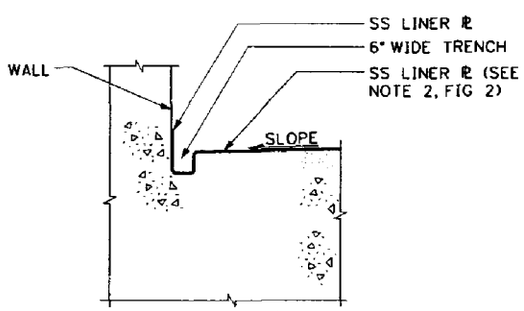

NOTE: LAB DOES NOT USE TRENCH; LABS USES MULTI-SLOPED SURFACES WITH 1% SLOPE WITH BREAKLINES THAT DIRECTS FLOW TO SUMP.

SECTION THRU TRENCH
PT, HLW, AND LAB BUILDING

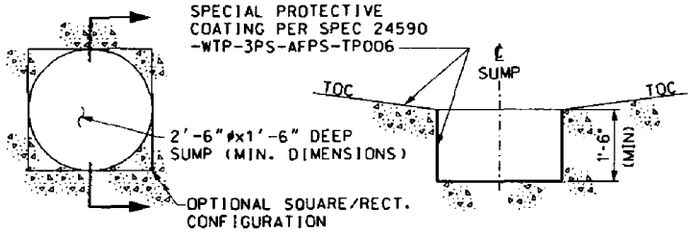

PLAN SECTION

NOTE: AS AN ALTERNATE TO T.O.C. SLOPING DIRECTLY TO SUMP, A COLLECTION TRENCH MAY BE USED PROVIDED 1% SLOPE TO SUMP IS MAINTAINED. WHERE DISCHARGE FROM TRENCH TO SUMP IS PROVIDED BY WAY OF AN EMBEDDED SLEEVE (OUTLET). INLET & OUTLET WILL CONFORM TO "TYPICAL WALL/MAT PENETRATION DETAIL".

TYPICAL PT SUMP WITH SPECIAL PROTECTIVE COATING

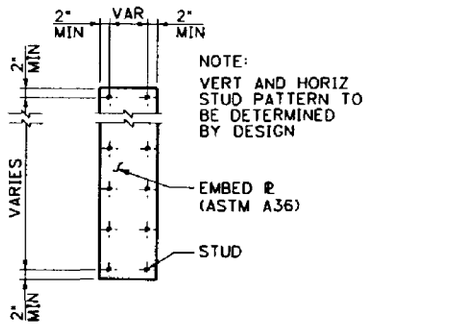

TYPICAL EMBED ℄ DETAIL

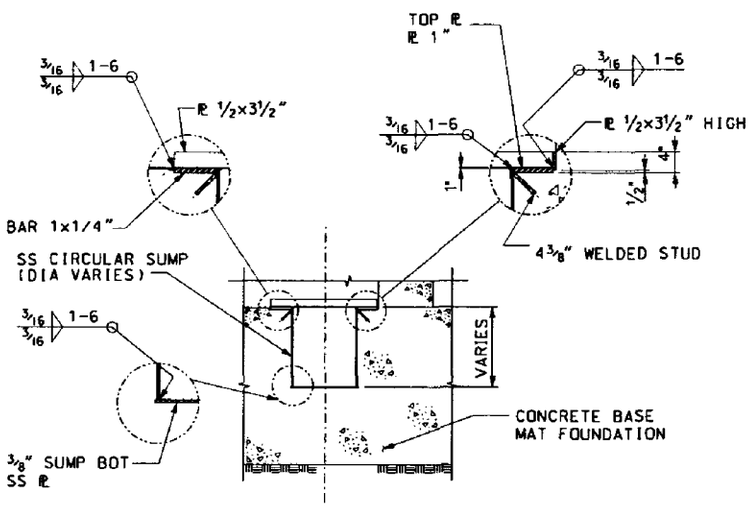

ELEVATION

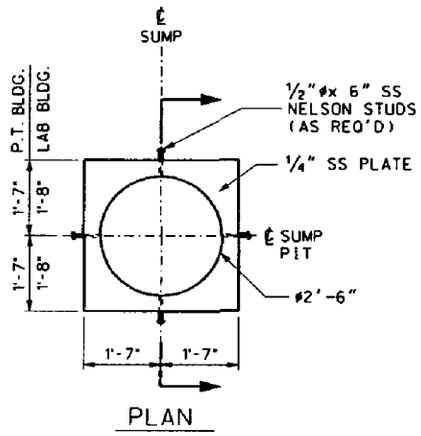

PLAN

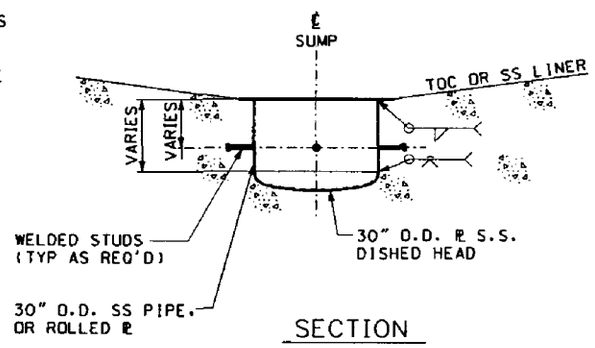

SECTION

SUMP DETAILS - PT, HLW (TYPE 2 SUMP) & LAB BUILDINGS

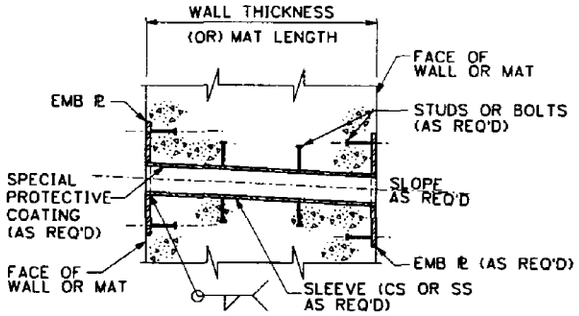

TYPICAL WALL/MAT PENETRATION DETAIL

GENERAL NOTES

1. FOR SUMP MATERIALS OF CONSTRUCTION SEE SUMP DATA DOCUMENTS LISTED BELOW.

   FOR PT BLDG: 24590-PTF-PER-M-02-006 TABLE 1
   FOR HLW BLDG:24590-HLW-PER-M-02-001 TABLE 1
   FOR LAW BLDG:24590-LAW-PER-M-02-001 TABLE 1
   FOR LAB BLDG:24590-LAB-PER-M-02-002 TABLE 1

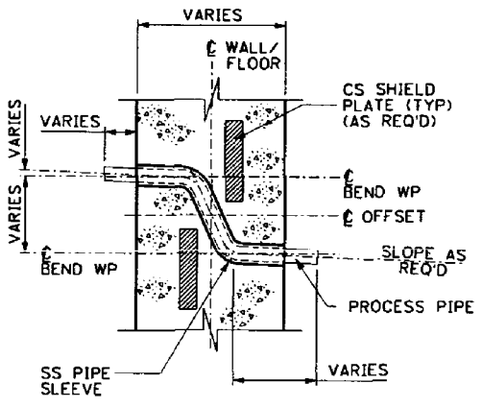

TYPICAL WALL/FLOOR JOGGLE PIPE DETAIL

SUMP DETAILS - LAW, HLW (TYPE 1 SUMP) BUILDINGS

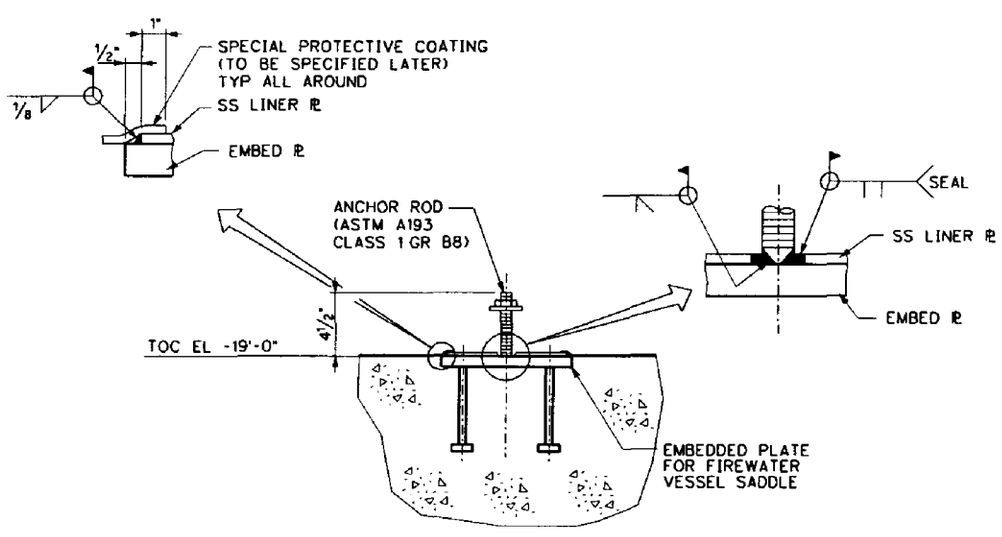

SS LINER AND SPECIAL PROTECTIVE COATING INTERFACE DETAILS AT FIREWATER PIT (PT BUILDING)

BECHTEL

FIGURE 4
MISC TYPICAL DETAILS SUMPS, TRENCHES, WALL PENETRATIONS EMBEDDED PLATES AND SPECIAL PROTECTIVE COATING PT, HLW, LAW & LAB BUILDINGS

DOCUMENT NO. 24590-WTP-PER-CSA-02-001, REV. 7

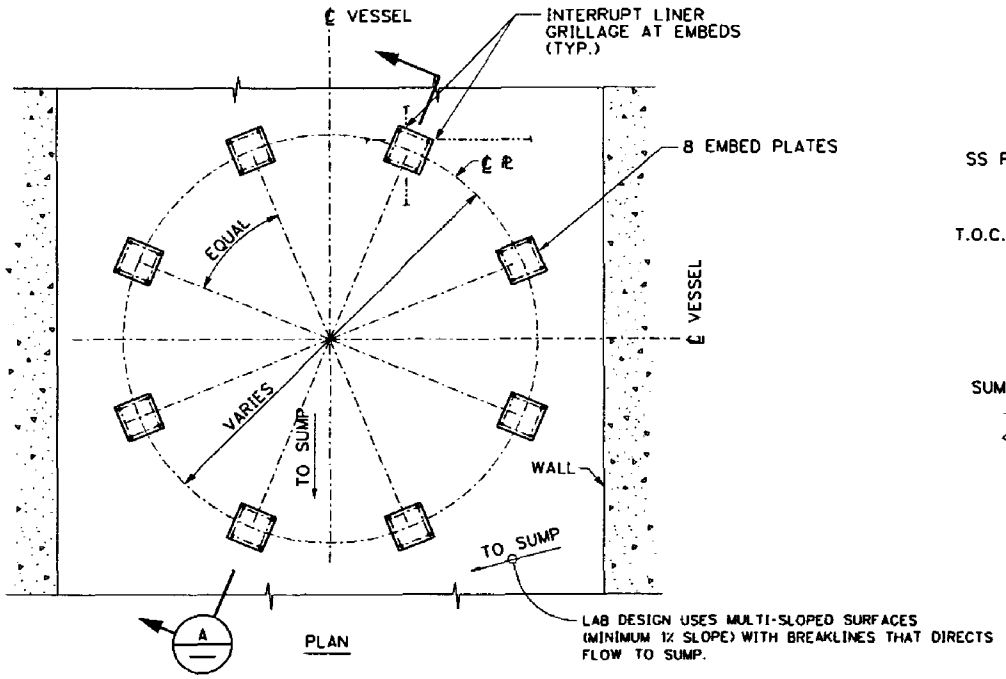

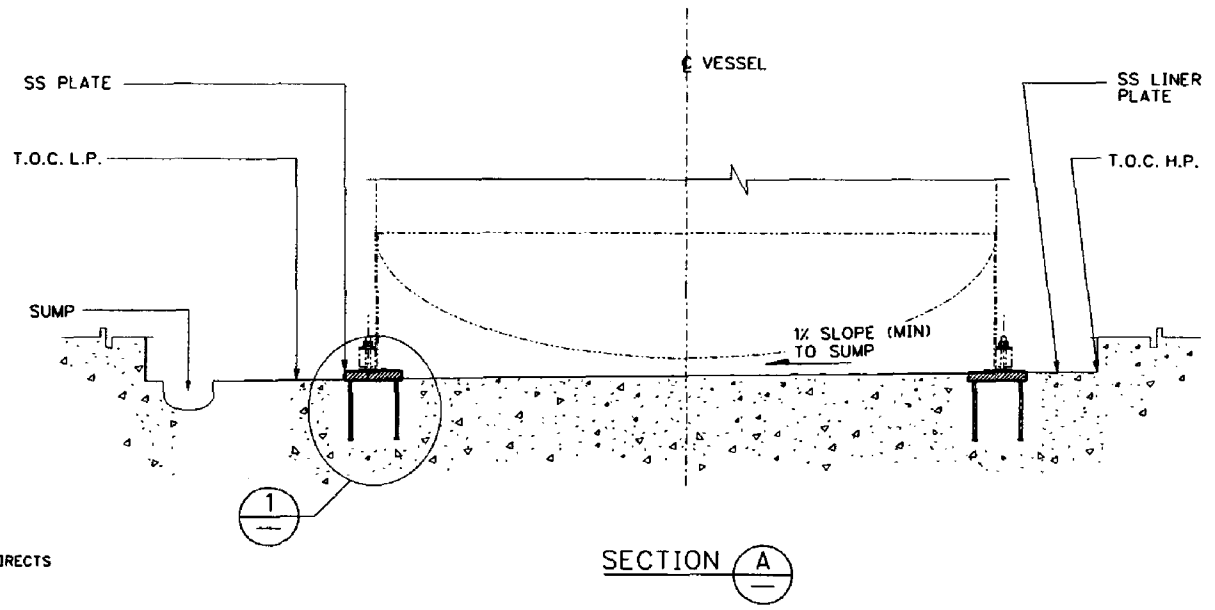

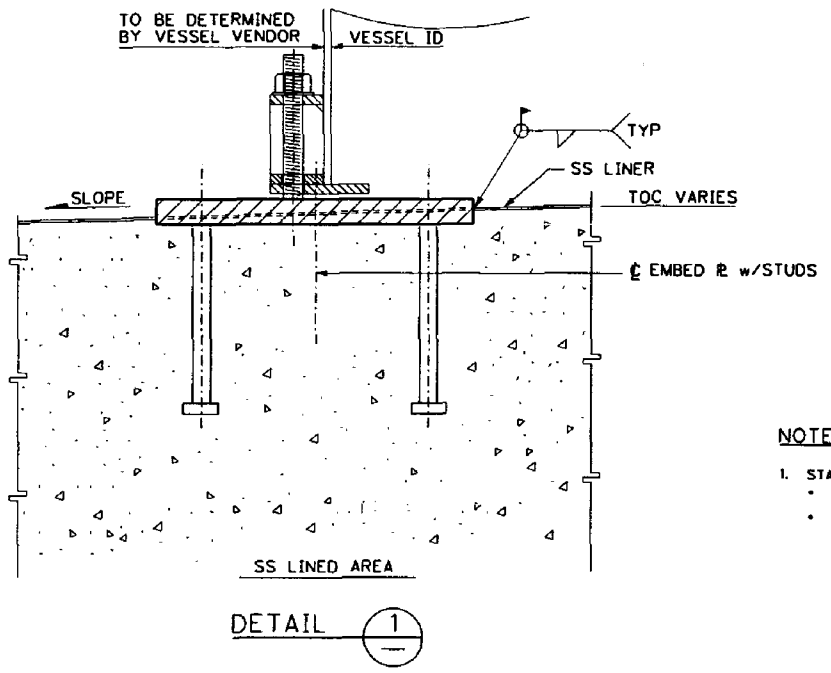

NOTES:

1. STAINLESS STEEL MATERIAL:
   - ASTM A240, TYPE 304L FOR PLATES
   - ASTM A108 GRADE C1010 THRU C1020 FOR STUD ANCHORS

BECHTEL

FIGURE 5

TYPICAL PROCESS VESSEL SUPPORT DETAILS FOR LAB BUILDING

DOCUMENT NO. | PAGE:

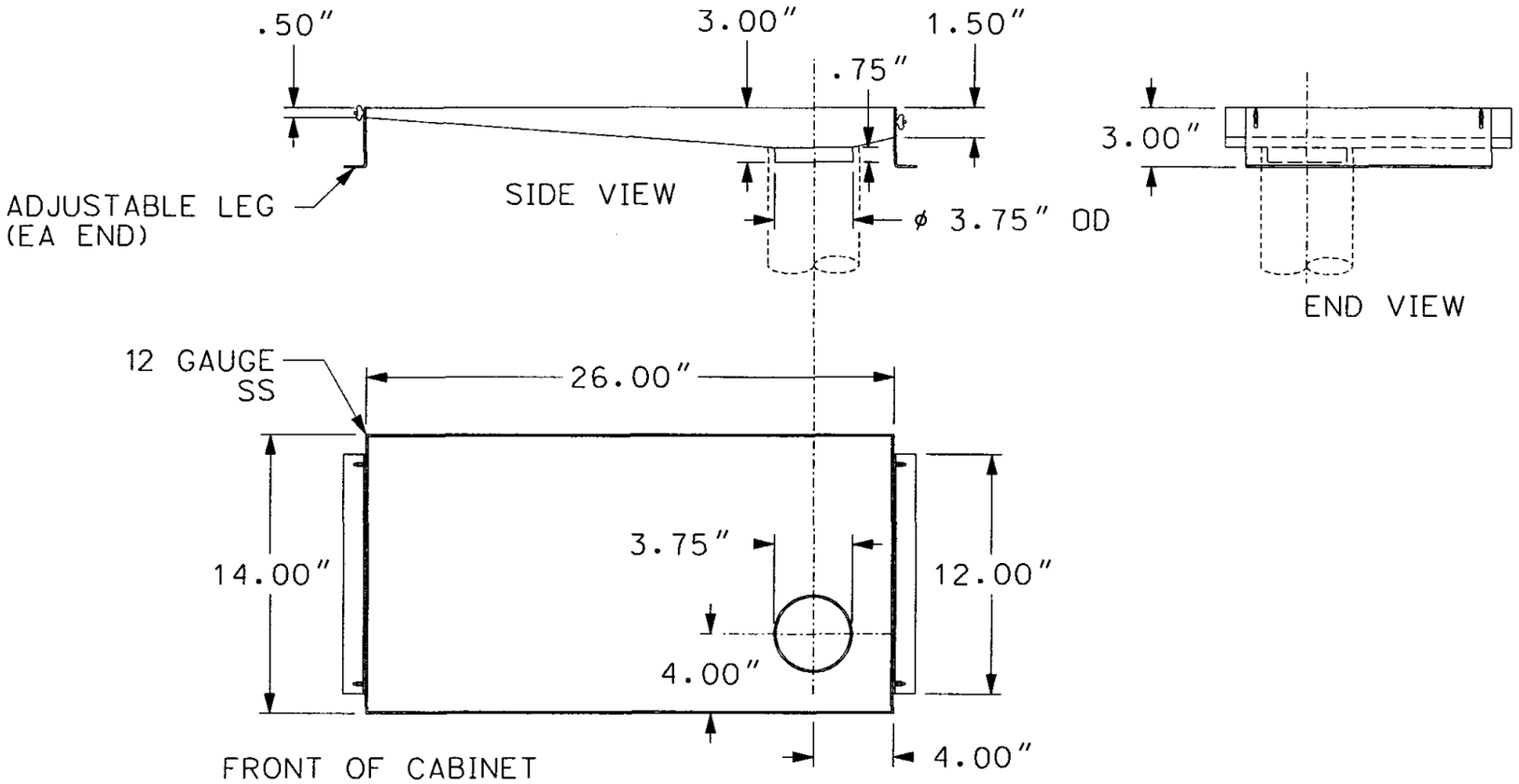

DETAIL VIEWS

NOTES:

1. PIPE ASSEMBLY SHOP FABRICATED.
2. AIR TIGHT WELDS TO 50 PSIG.
3. LEAK COLLECTION PAN SHOP WELDED IN 12 GAUGE (0.1065"), 304L STAINLESS STEEL.

FIGURE 6

PLAN VIEW OF TYPICAL UNDER SINK AND FUME HOOD DRAIN FOR LAB BLDG SECONDARY CONTAINMENT LEAK COLLECTION PAN

NOTES:

1. FABRICATION SHALL BE IN ACCORDANCE WITH SPECIFICATION 24590-WTP-3PS-PS02-T0001, SHOP FABRICATION OF PIPING.
2. ALL DIMENSIONS ARE IN INCHES UNLESS OTHERWISE SPECIFIED
3. PLUG SHALL BE HASTELLOY ASTM B 168 (UNS N06022).

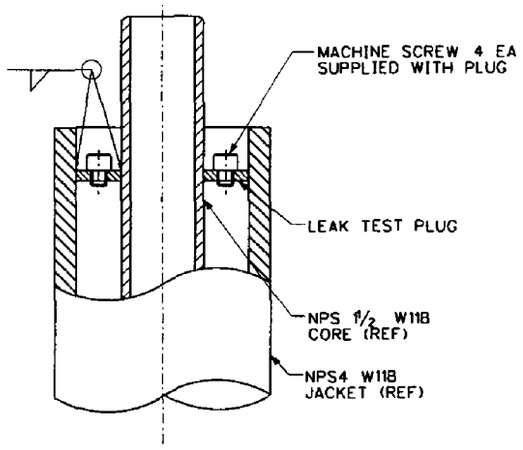

ASSEMBLY VIEW

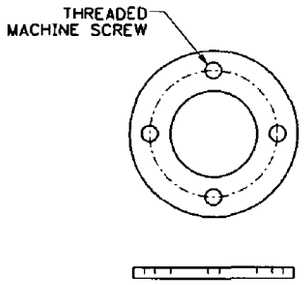

PLUG DETAIL

DETAIL 2
LEAK TEST PLUG
PIPE CLASS W11B

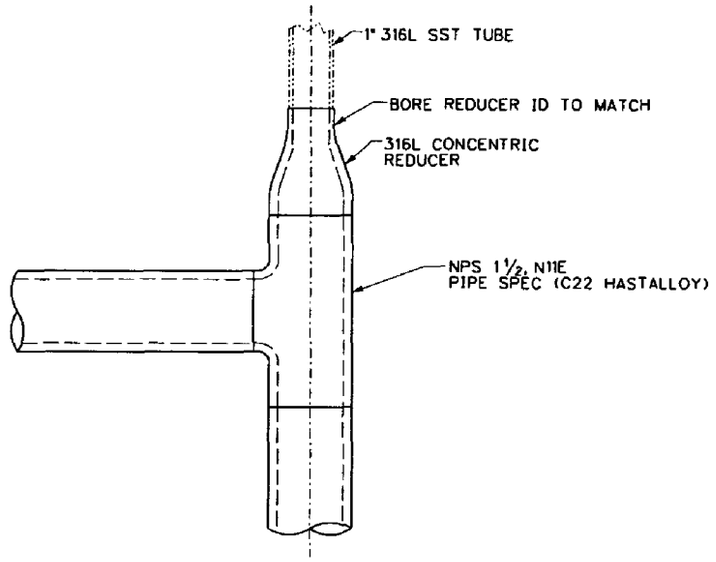

DETAIL 1
VENT TUBE ADAPTOR DETAIL
PIPE CLASS N11E
(SEE NOTE 1)

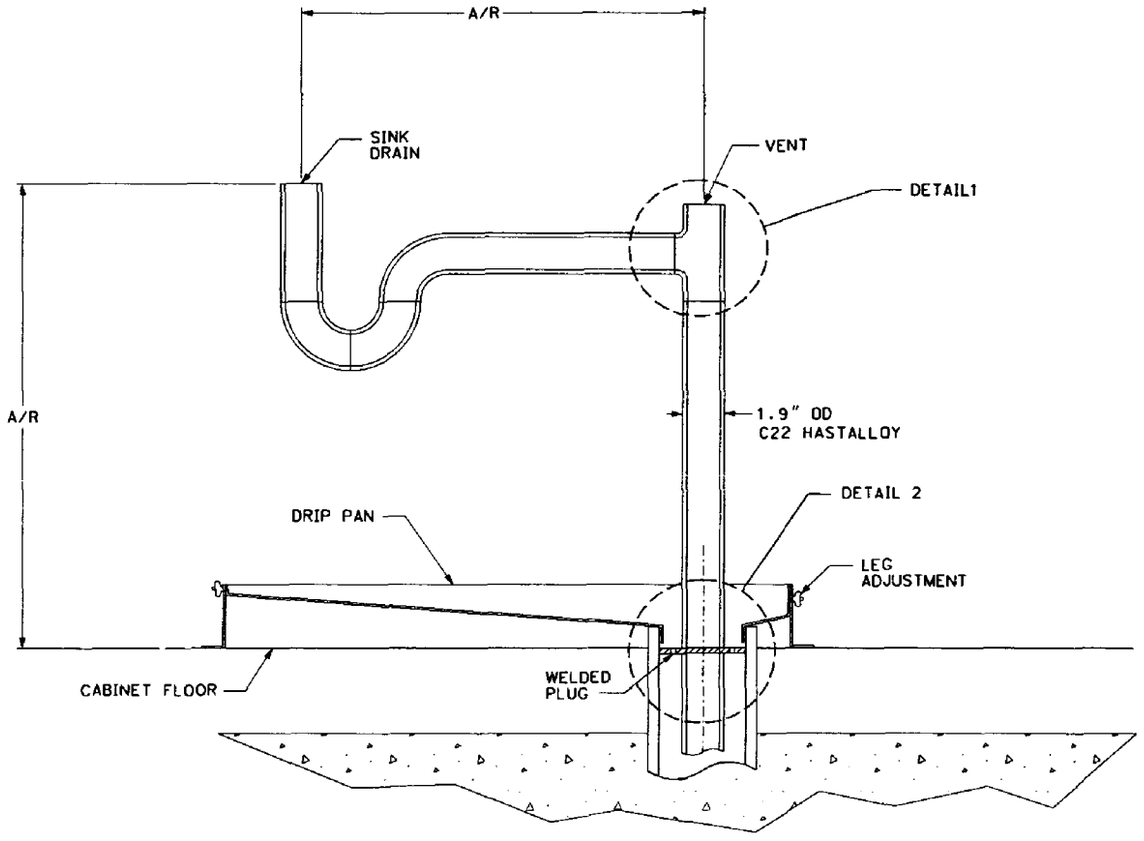

SECTIONAL VIEW

FIGURE 7

SECTION VIEW OF TYPICAL LABORATORY UNDER SINK AND FUME HOOD DRAIN FOR LAB BLDG SECONDARY CONTAINMENT LEAK COLLECTION PAN, INCLUDING LEAK TEST PLUG

NOTES:

1. MATERIAL TO BE ASTM A240 TYPE 304 L STAINLESS STEEL.
2. THE SUMP PLUG ACTS AS A WEIR TO CAPTURE LEAKING WATER IN THE PIT. A LEAK GREATER THAN 0.1 GAL PER HOUR WILL BE DETECTED BY THE LEVEL DETECTOR. IF THE LEAK IS SIGNIFICANT, OR NOT DETECTED, IT WILL FLOW OVER THE 1" HIGH WEIR AND EXIT THRU THE DRAIN.
3. ALL DIMENSIONS ARE IN INCHES, UNLESS OTHERWISE SPECIFIED.

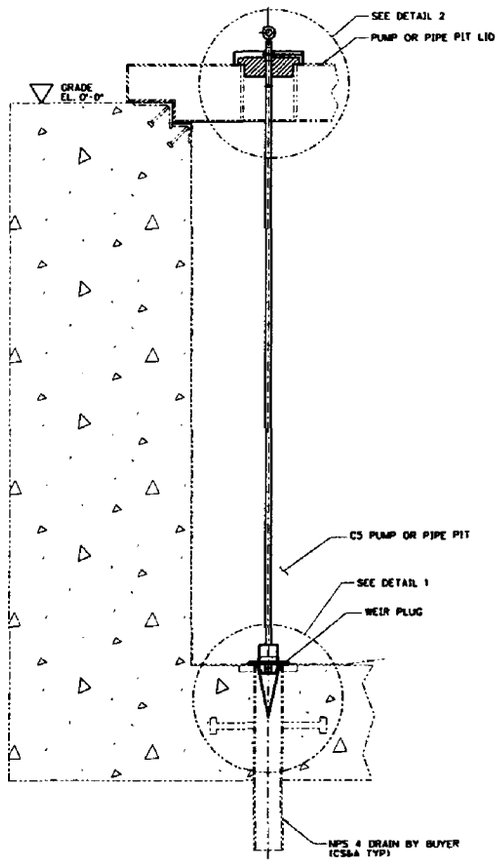

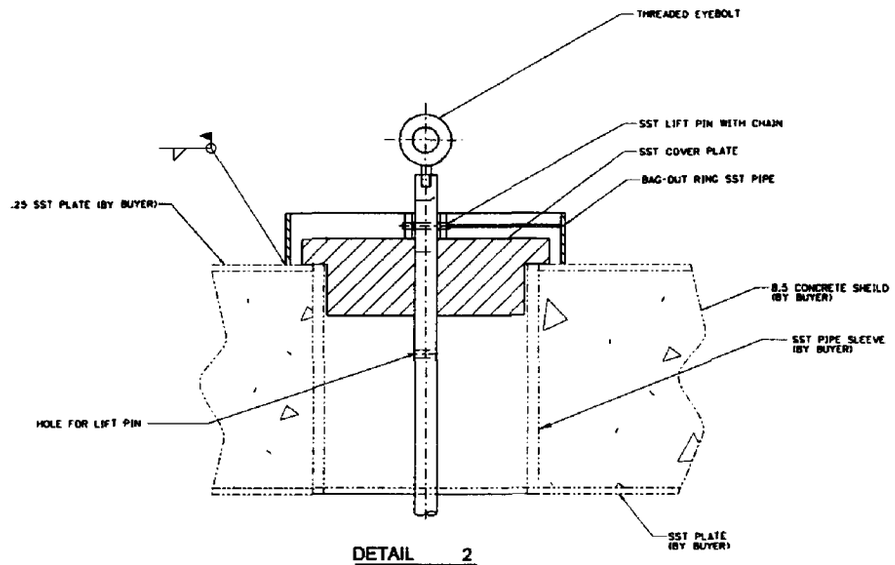

DETAIL 2
SCALE 1/2"=1'

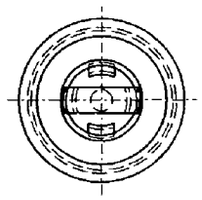

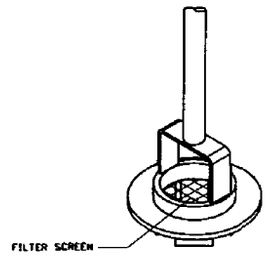

ISOMETRIC VIEW
SCALE:NONE

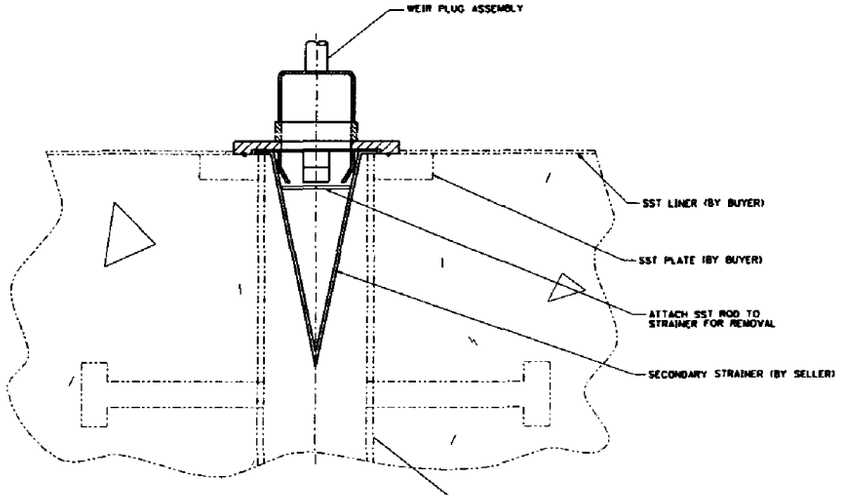

DETAIL 1
SCALE 1/2"=1'

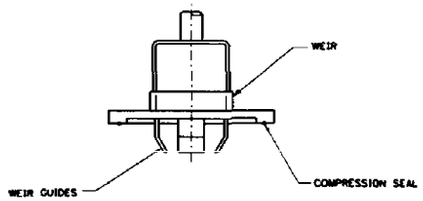

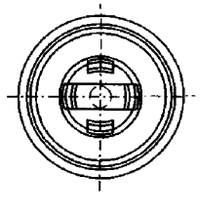

WEIR PLUG DETAIL
SCALE:1/2"=1"
SCREEN NOT SHOWN

BECHTEL

FIGURE 8

TYPICAL LABORATORY C5 PIPING AND PUMP PIT SUMP AND WEIR DETAILS FOR LAB BUILDING

NOTES:

1. FABRICATION SHALL BE IN ACCORDANCE WITH SPECIFICATION 24590-WTP-3PS-PS02-T0001, SHOP FABRICATION OF PIPING.
2. ALL DIMENSIONS ARE IN INCHES UNLESS OTHERWISE SPECIFIED
3. MATERIAL FOR THE FLANGE PLATE SHALL BE ASTM A240 TYPE 316L, STAINLESS STEEL. ALL OTHER STAINLESS STEEL ITEMS TO BE 300 SERIES.
4. MATERIAL: 14 GA., SST, PERFORATED PLATE 1/8" DIA. HOLES ON 3/16" CENTERS (40% OPEN AREA, 33 HOLES/SQ. IN.).
5. CUPSINK COVER - SST REGIMESH SINTERED WOVEN WIRE MESH GRADE 1 FILTER OR EQUIVALENT.

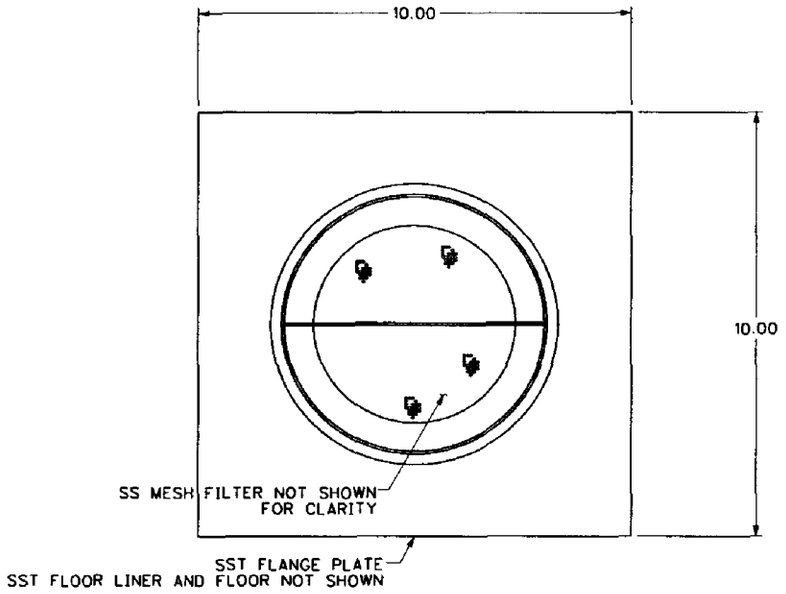

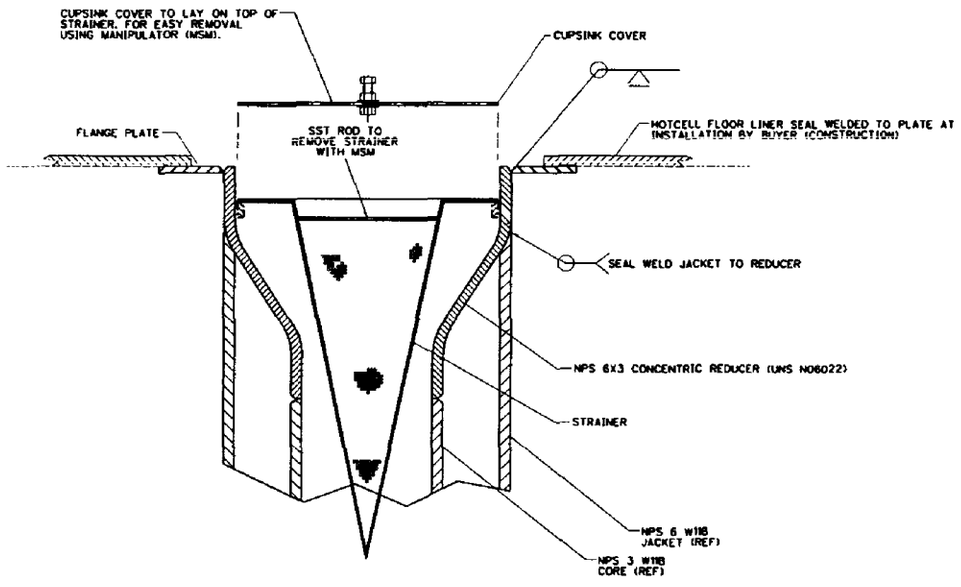

HOTCELL CUPSINK (FLOOR DRAIN) DETAIL
NPS 3 CORE PIPE
PIPE CLASS W11B

NOTES:

1. ALL DIMENSIONS ARE IN INCHES UNLESS OTHERWISE SPECIFIED.
2. FABRICATION SHALL BE IN ACCORDANCE WITH SPECIFICATION 24590-WTP-3PS-PS02-T0001, SHOP FABRICATION OF PIPING.
3. PIPE CLASS S32B
4. DIMENSION TO SLIP FIT WITH OD OF CORE PIPE.

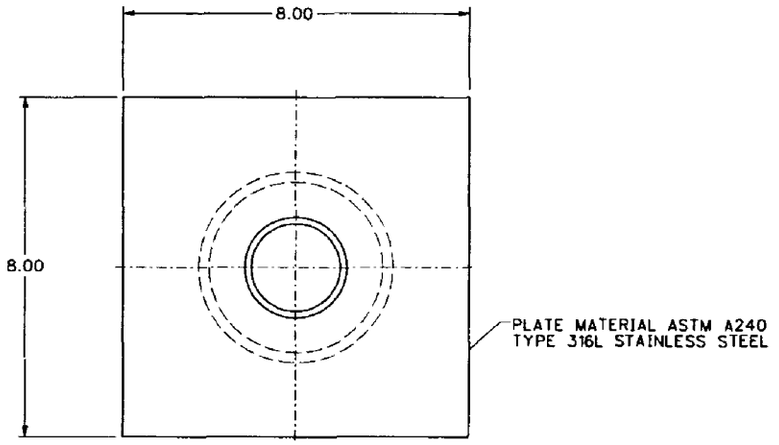

TOP VIEW

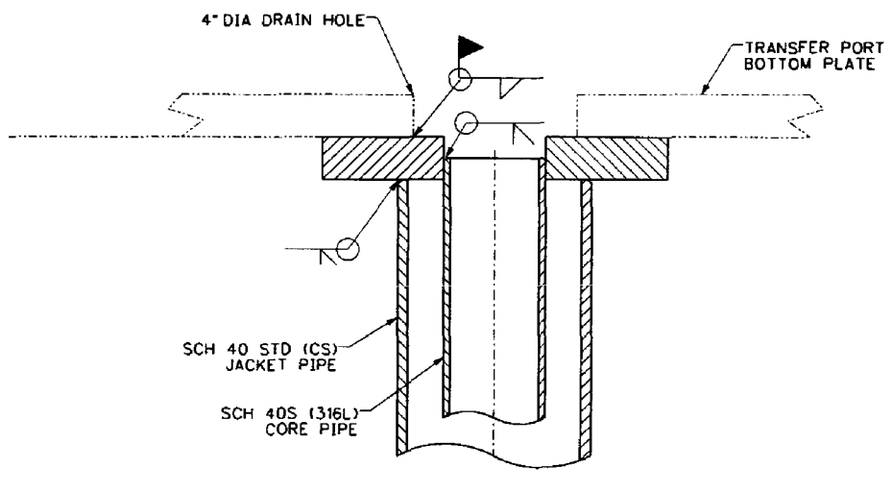

SECTION VIEW

HOT CELL TRANSFER PORT DRAIN

FIGURE 9

TYPICAL HOT CELL FLOOR DRAIN DETAIL AND TRANSFER PORT DRAIN DETAIL FOR LAB BUILDING

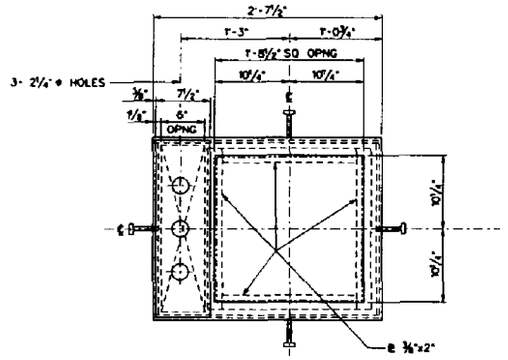

PLAN - SUMP TYPE 4

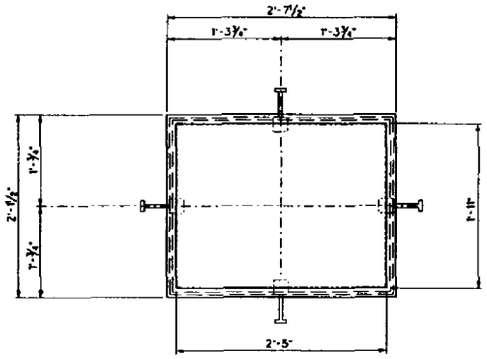

PLAN- SUMP TYPE 5

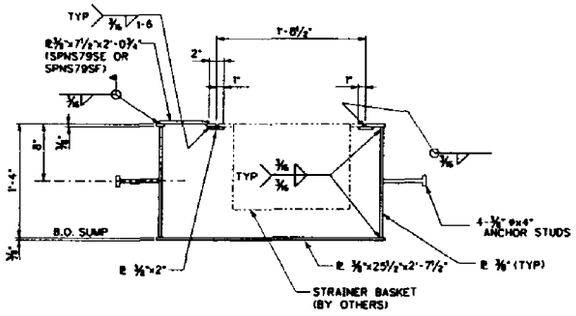

ELEVATION
(SEE NOTE 2)

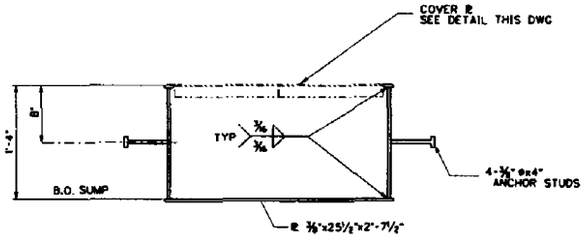

ELEVATION

NOTES FOR TYPE 3 SUMP:

1. ALL LINERS/EMBED PLATES ARE A36 STEEL UNLESS NOTED OTHERWISE.
2. WHERE NOTE 2 CALLED OUT ON DRAWINGS WELD JOINT PREPARATIONS SHALL BE BTC-P4 DESIGNATION.
3. MATERIAL NOTED "(SST)" IS 304L STAINLESS STEEL.
4. QUALITY LEVEL IS QL-1.
5. LINER FABRICATION TOLERANCES:
   PLAN DIMENSIONS - (-)0", (+)1/4"
   OVERALL LENGTH & VERTICAL DIMENSIONS - (±)1/8"

NOTES FOR TYPE 4 & 5 SUMPS:

1. "SST" INDICATES ASTM A-240 304L SS PLATE MATERIAL.
2. SUMP MATERIALS.
   A. SUMP BOTTOM ℄ & SIDE ℄
      ASTM A 240 UNS N08367
   B. TOP ℄
      ASTM A 240 TYPE 304L
   C. STUD MATERIAL
      ASTM A 108
3. HOLES OR PENETRATIONS IN THE SUMP COVER PLATES FOR STEAM LINES ,SUCTION PIPING, RADAR GUIDE TUBE ETC. SHALL BE SIZED ¼" (MAX) BIGGER THAN THE OUTSIDE DIMENSION OF PIPE/TUBE PENETRATING THE SUMP COVER PLATE.
4. PLATES, ANGLES, ETC. TO BE ASTM A36 U.N.O..
5. QUALITY LEVEL IS QL-1.

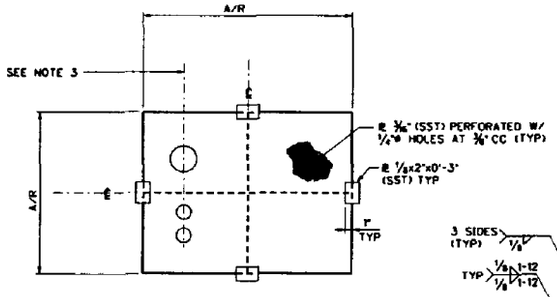

PLAN - SUMP COVER PLATE
FOR TYPE 5 ONLY

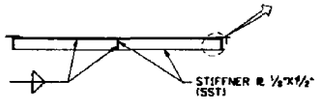

ELEVATION

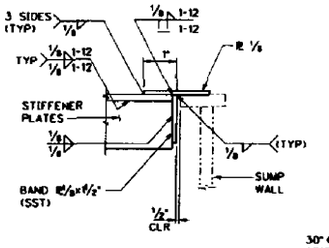

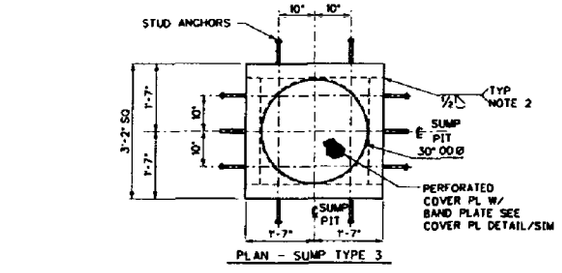

PLAN - SUMP TYPE 3

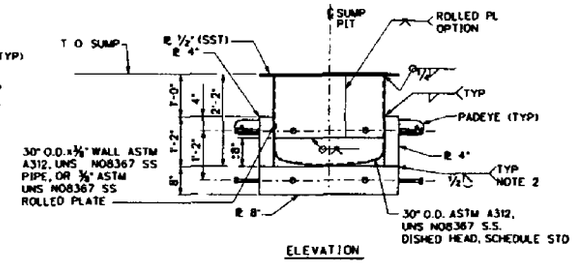

ELEVATION

SUMP DETAILS FOR HLW BUILDING

NOTES FOR EMBED DETAIL:

1. STAINLESS STEEL LINER SHALL BE SEAL WELDED TO EMBEDDED CARBON STEEL PLATES AS SHOWN IN DETAIL.
2. CONCRETE FORM ATTACHMENT HOLES SHALL BE SEALED OR COVERED WITH A MINIMUM OF ⅛" OF STAINLESS STEEL MATERIAL. THIS MATERIAL MAY BE WELD FILLER METAL, SMALL PIECES OF ⅛" SHEET, OR MAY BE COVERED BY OVERLAPPING THE LINER PLATE PAST THE HOLES IN THE EMBED PLATES.
3. THE EXPOSED SURFACE OF THE EMBED PLATES WILL BE COATED PER SPEC. 24590-WTP-3PS-AFPS-T0001 OR T0003 AS APPROPREATE. TO PREVENT CORROSION.
4. IN LIEU OF COVERING JOINT BETWEEN ADJACENT EMBEDS WITH SS LINER PLATE. JOINT MAY BE SEAL WELDED USING ⅜" MIN. DEPTH GROOVE WELD IN ACCORDANCE WITH AWS D1.1-00.

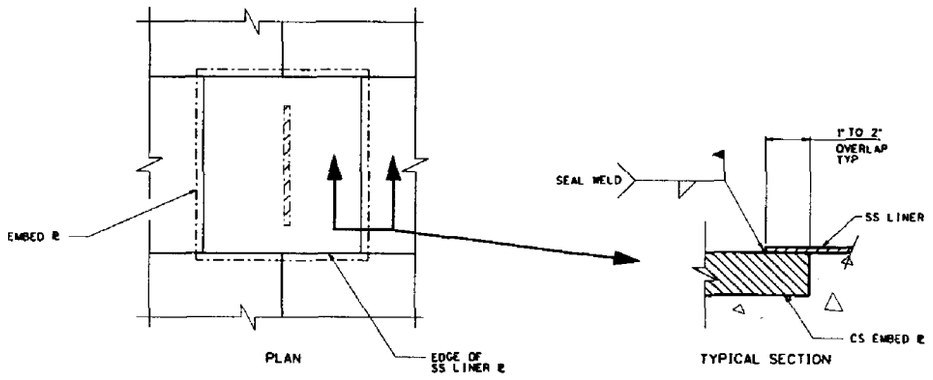

PLAN

TYPICAL SECTION

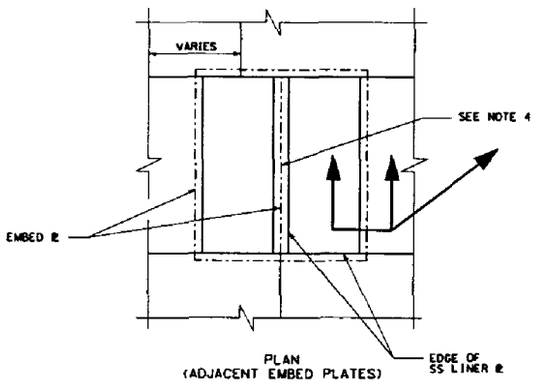

PLAN
(ADJACENT EMBED PLATES)

TYPICAL PT SS LINER/CS EMBED DETAIL

EMBED PLATE DETAILS FOR PT BUILDING

FIGURE 10

TYPICAL HLW BUILDING SUMP DETAILS & TYPICAL PT BUILDING SS LINER/CS EMBED DETAIL

NOTES:

1. MATERIAL TO BE ASTM A240 TYPE 304 L STAINLESS STEEL.
2. THE SUMP PLUG ACTS AS A WEIR TO CAPTURE LEAKING WATER IN THE PIT. A LEAK GREATER THAN 0.1 GAL PER HOUR WILL BE DETECTED BY THE LEVEL DETECTOR. IF THE LEAK IS SIGNIFICANT, OR NOT DETECTED, IT WILL FLOW OVER THE 1" HIGH WEIR AND EXIT THRU THE DRAIN.
3. ALL DIMENSIONS ARE IN INCHES, UNLESS OTHERWISE SPECIFIED.

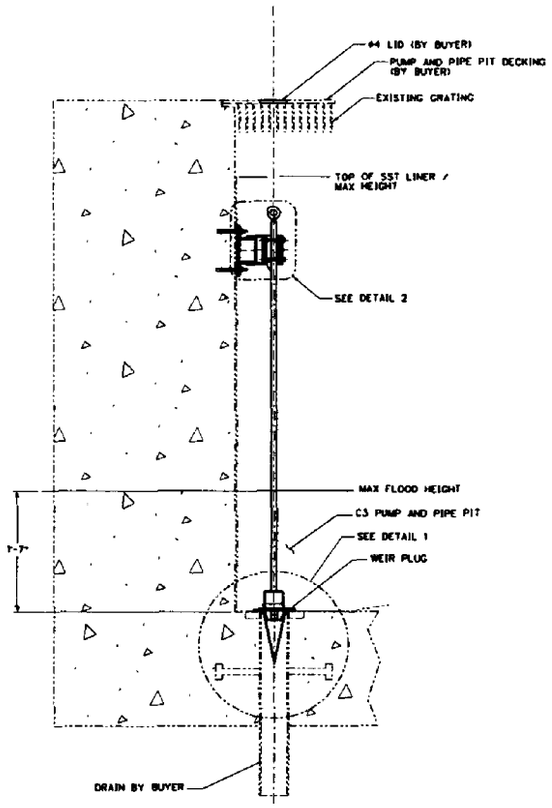

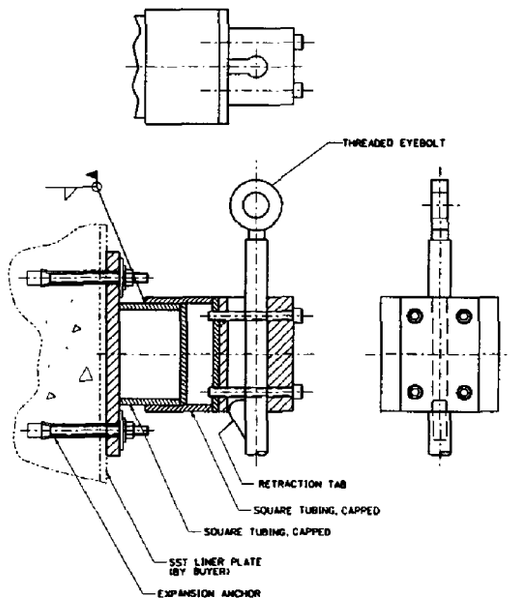

DETAIL 2

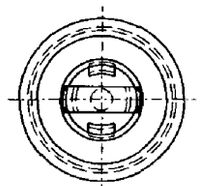

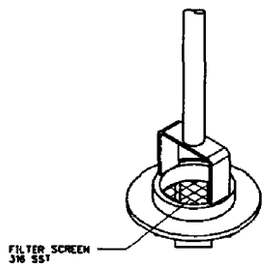

ISOMETRIC VIEW

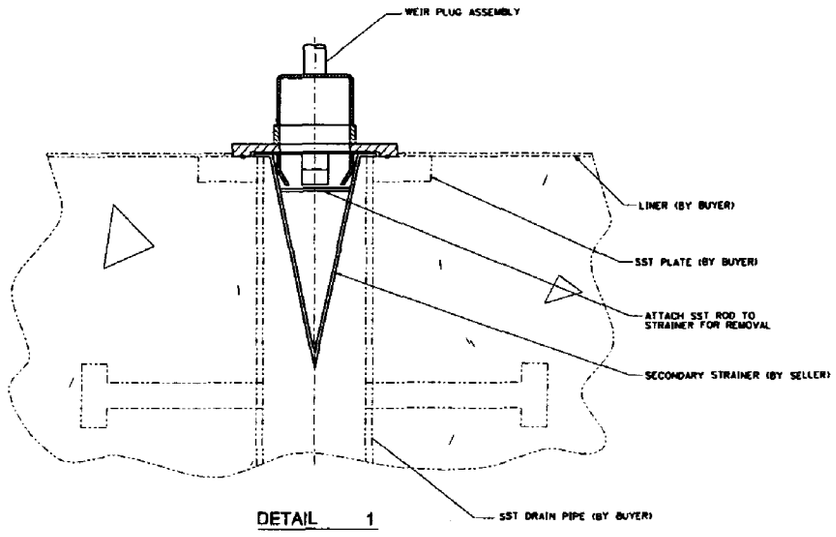

DETAIL 1

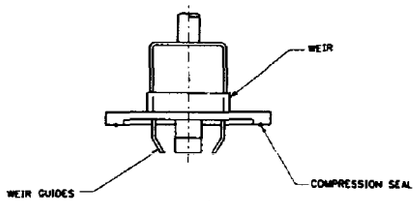

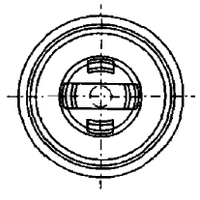

WEIR PLUG DETAIL

SCREEN NOT SHOWN

FIGURE 11

TYPICAL LABORATORY C3 PIPING AND PUMP PIT SUMP AND WEIR DETAILS FOR LAB BUILDING

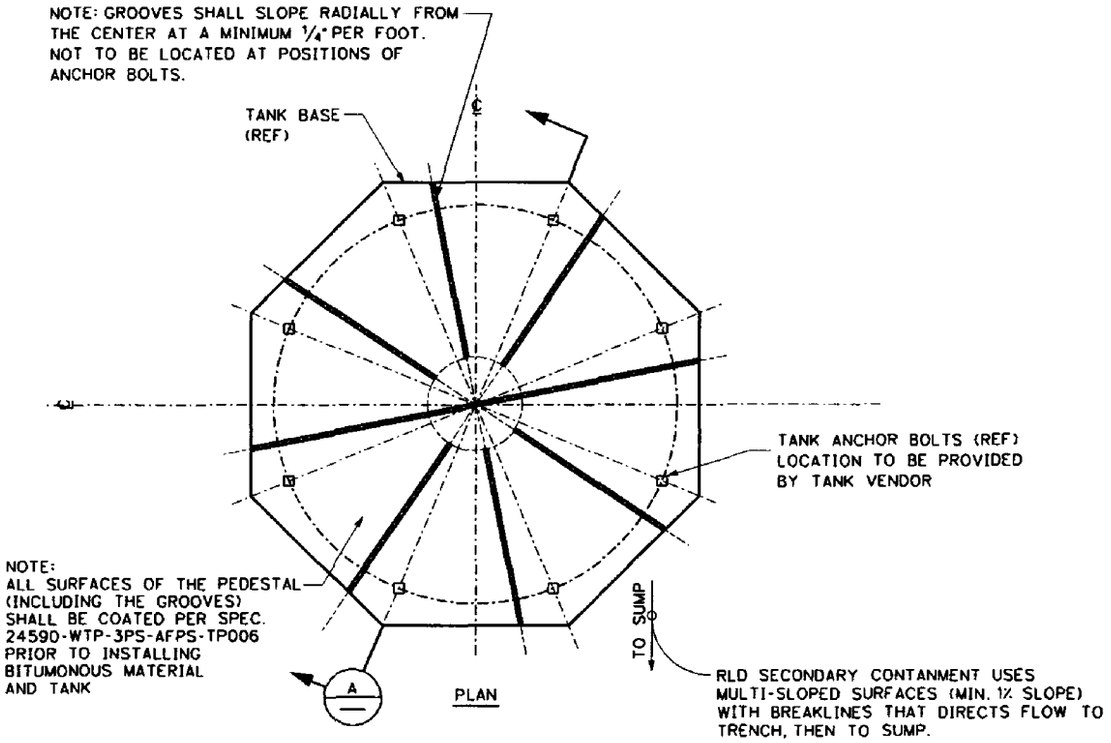

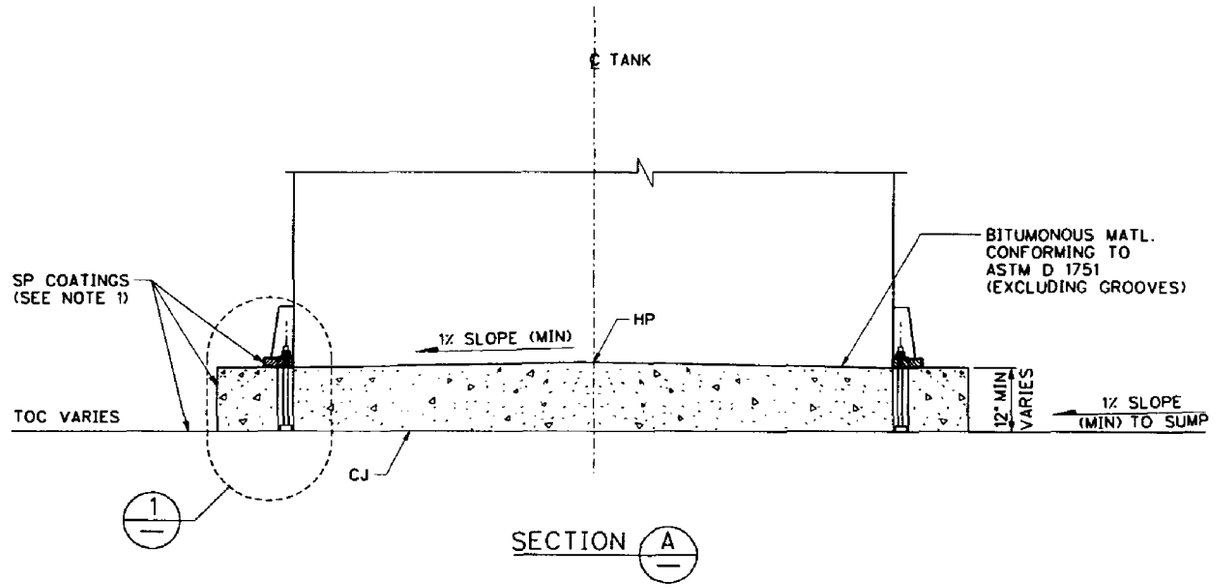

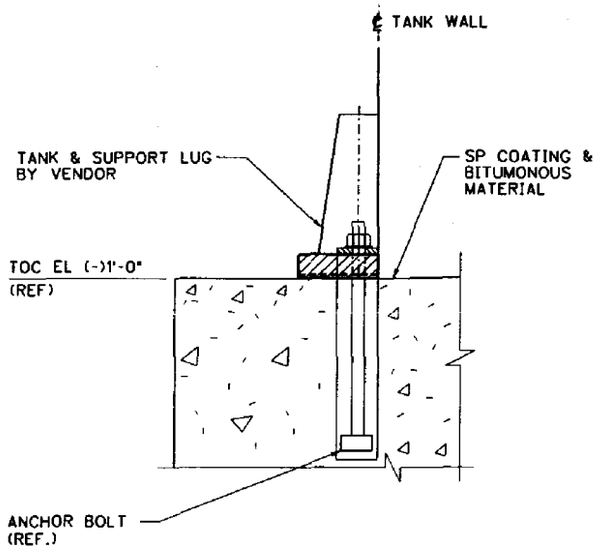

DETAIL 1

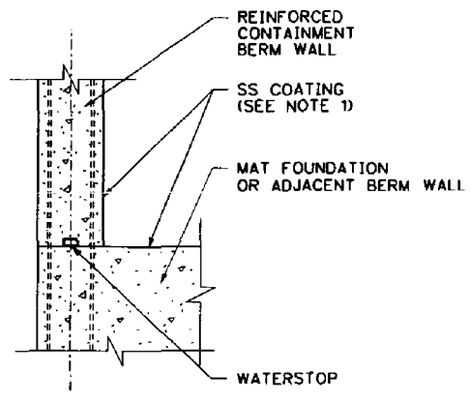

DETAIL 2

NOTES:

1. SPECIAL PROTECTIVE COATINGS WILL BE PROVIDED IN ACCORDANCE WITH 24590-WTP-3PS-AFPS-TP006.
2. EXTERNAL GALVANIZED COMPONENTS SHALL BE ISOLATED FROM STAINLESS STEEL COMPONENTS/TANKS.

BECHTEL

FIGURE 12

TYPICAL RLD CONDENSATE TANK SUPPORT DETAILS FOR PT BUILDING (EXTERIOR)

R10111472

DOCUMENT INFORMATION

Sheet 1 of 1

The following information is required when submitting a document to PDC for issuance.	**Correspondence (CCN) No:** _____ **Document No:** 24590-WTP-PER-J-02-001 **Rev:** 4

Project Information (Check Applicable Box)

☐ Balance of Facilities ☐ HLW Vitrification ☐ Analytical Laboratory ☑ Across all areas

☐ Pretreatment ☐ LAW Vitrification ☐ External Interfaces

Document is applicable to ALARA (as determined by the originator)? ☐ Yes ☑ No

Applicability to ALARA means that the item has the potential to affect doses, contamination levels, or releases to the environment. (See 24590-WTP-GPP-SRAD-002, *Application of ALARA in the Design Process*, sections 4.1 and 4.2 for more information.)

Subject code(s): _____ (for correspondence only)

ACTION ITEM INFORMATION (for correspondence other than meeting minutes)

Commitments: ☐ Yes ☐ No (if yes, brief description below)

_____

_____

Tracked by RITS

Commitment Owed to: _____ Due Date: _____

Actionee(s)			

Tracked by PADC

Written Response Required: ☐ Yes ☐ No

Owed to: _____ Due Date: _____

This correspondence closes action on Correspondence Number _____

☐ Subcontract Files _____ Copies

☐ PAAA Coordinator MS14-4B

☐ Contains SENSITIVE Information

Additional Departmental Info (to facilitate keyword search)

Internal ☐ DNFSB ☐ ORP ☐ OSR ☐ WDOE ☐ WDOH ☐ Other _____

Special Instructions for PDC

submitted to PADC w/OA Master Distribution Schedule 8/13/13

8/13/13

Processed Data Entry | Copied CA | Scanned | Filed

to

Document title: **Leak Detection - Sump Level Measurement in Secondary Containment Systems**

Contract number: DE-AC27-01RV14136

Department: Controls and Instrumentation

Author(s): E L Vodopest

Principal author signature: Ed L. Vodopest

ISSUED BY RPP-WTP PDC
INIT DM 8/13/03 DATE

Document number: 24590-WTP-PER-J-02-001, Rev 4

Checked by: H V McAdams

Checker signature: H. Val McAdams

Date of issue: 11 August 2003

Issue status: Issued for Permitting Use

Approved by: S E Anderson

Approver's position: Controls and Instrumentation Discipline Engineering Manager

Approver signature: S. E. Anderson

EDWARD L. VODOPEST
STATE OF WASHINGTON
26834
REGISTERED
PROFESSIONAL ENGINEER

Edward L. Vodopest, P.E.

EXPIRES 8-29-03

This bound document contains a total of 11 sheets

River Protection Project
Waste Treatment Plant
2435 Stevens Center Place
Richland, WA 99352
United States of America
Tel: 509 371 2000

History Sheet

Rev	Date	Reason for revision	Revised by
0	28 Jun 2002	Issued for Permitting Use	M A Daggett/N J Schertz
1	29 Jul 2002	Issued for Permitting Use (added dry sump – radar)	K D Smith/N J Schertz
2	01 Oct 2002	Issued for Permitting Use (radar for wet sumps)	N J Schertz
3	31 Mar 2003	Issued for Permitting Use (added thermal dispersion description and Figure 5, extensively revised air bubbler and radar level description and figures)	K D Smith/E L Vodopest
4	11 Aug 2003	Updated Figures 1 and 5; Issued for Permitting Use	E L Vodopest

Contents

1 Introduction 1
2 Applicable Documents 1
3 Description 1
3.1 Bubbler Level Measurement Leak-Detection Method 1
3.2 Radar Level Measurement Leak-Detection Method 2
3.3 Thermal Dispersion Level Measurement Leak-Detection Method 3

Figures

Figure 1 Bubbler Level Measurement for Sump 4
Figure 2 Radar Level Measurement for In-Cell Sumps 5
Figure 3 Radar Level Measurement for Out-Cell Sumps 6
Figure 4 Radar Level Measurement for Out-Cell Sumps –Horn 7
Figure 5 Thermal Dispersion Level Measurement for Sump 8

1 Introduction

This document describes the level measurement technology employed for leak detection in secondary containment sumps. The installation and functional testing of leak-detection systems is also described.

2 Applicable Documents

WAC 173-303, "Dangerous Waste Regulations", as amended.

3 Description

3.1 Bubbler Level Measurement Leak-Detection Method

3.1.1 Leak-Detection Method

This air bubbler leak-detection (level) method uses a dip pipe, that immerses into the sump liquid. The dip pipe serves as a conduit for air at a pressure slightly greater than the opposed by the hydrostatic head of the liquid. A differential pressure transmitter measures differences in pressure across the transmitter diaphragm because one side of the diaphragm is connected to the bubbler dip pipe/sensing line and the other side is referenced by a sensing line to the atmospheric pressure above the sump liquid surface. A rise of sump liquid level creates a greater air pressure in the dip pipe/sensing line and on the high pressure (HP) side of the diaphragm, resulting in a higher differential pressure, which is converted into a higher level signal to the process control system (PCJ). Multiple bubblers will be installed if a lack of maintenance access after the start of operations is expected and no other means of leak detection is provided.

Sumps are designed to be dry with a liquid normally not present or wet with a liquid normally present. The PCJ will monitor the level and alarm "high level". A high-level alarm permits the operator to determine if a breach in the primary containment has occurred and has allowed fluid to flow into the secondary containment sump (if no other normal operation has occurred).

Additional alarms will be evaluated during design for the leak-detection system. The PCJ will alarm on low level (for wet sumps), which will prompt the operator to restore a normal sump level, as required, to ensure a hydrostatic pressure acting upon the air bubbler system, as required. The PCJ will constantly monitor and perform diagnostics on the transmitter/foundation fieldbus data-communications link, and an alarm will result from a number of conditions, including loss of signal power, as required. A transmitter bad-data-quality PCJ alarm will permit the operator to indirectly infer a number of conditions, including a loss of bubbler air-purge flow, as required.

3.1.2 Installation and Functional Testing

The air bubbler differential pressure transmitter will be located at least 1 barometric head (approximately 34 feet) above the highest expected liquid surface level. This minimizes the possibility that the transmitter might be contaminated due to possible moisture collection or flow of the normally displaced

sump liquid up into the dip pipe/sensing line upon the loss of purge air. The transmitter will be located in a C3 area where maintenance will be performed under administrative control.

Figure 1 shows a general sketch of the air bubbler leak-detection system. The sensing lines will go through radiation shielding to protect the instrument. Personnel conducting maintenance operations on the transmitter will be shielded from the radioactive environment of the cell. The bubbler sensing-line air-purge flow will be controlled by a needle valve (with a rotameter indicating flow). The controlled air-purge flow will provide a minimum bubble rate to the dip pipe at the maximum expected liquid level and back pressure to the leak-detection instrument. For the atmospheric sensing line, air-purge flow will be similarly controlled to minimize moisture collection.

The piping (bubbler dip pipe/sensing line) will have the capability to be flushed.

Once installed, the air bubbler leak-detection system, including all instrumentation, piping, and other associated equipment, will be tested as a system during initial startup testing. The system will be checked and verified for the proper level indication and alarm response. The air bubbler leak-detection system will subsequently be tested in accordance with WTP administrative program and calibration test procedures written specifically for this instrumentation.

3.2 Radar Level Measurement Leak-Detection Method

3.2.1 Leak-Detection Method

A typical radar level method employs a radar level transmitter. Such transmitters are designed to transmit by using an antenna, and to receive with a cone designed to pick up radar high frequency, pulsed signals. Much of the transmitted signal is reflected by the liquid surface and received at its source. A waveguide is used to channel the signals through different geometry or to avoid nearby equipment that might affect signal quality. The transmitter compares the time when the signal was sent to the time when the reflected signal returns. This time difference is then converted to the PCJ as a level signal.

Sumps are designed to be dry with a liquid normally not present or wet with a liquid normally present. This sump leak-detection method will use 1 radar level detection transmitter. The PCJ will monitor and alarm at a high level. A high-level alarm permits the operator to determine if a breach in the primary containment has occurred and has allowed fluid to flow into the secondary containment sump (if no other normal operation has occurred).

Additional alarms will be evaluated during design for the leak-detection system. A rate-of-change or "rate-of-rise" of the effluent will be calculated by the PCJ with an alarm intended solely to provide operational alert of a potential leak, as required. The PCJ will constantly monitor and perform diagnostics on the transmitter/foundation fieldbus data-communications link, and an alarm will result from a number of conditions, including loss of signal power, as required. A transmitter bad-data-quality PCJ alarm will be provided, as required.

3.2.2 Installation and Functional Testing

The radar transmitter will be located in a C3 area, where maintenance will be performed under administrative control, or a C2 area, where routine maintenance will be performed. Figures 2 through 4 generally illustrate the installation of the leak-detection system. The waveguide will be installed so that the waveguide enters the sump and is placed open-ended, with a gap from the sump bottom. Venting of

the waveguide above the liner or berm is required; vent slots will be included as required by sump liquids. As shown in Figure 2, the radar waveguide will go through shielding (the floor or wall using a joggle in the waveguide) to protect the instrument, as well as personnel conducting maintenance operations on the transmitter from the radioactive environment of the cell. As shown in Figures 3 and 4, the radar level detection will be in the same area as the sump. Various types of horns, antennas, and waveguides may be used.

The piping (waveguide) inserted into the process will primarily be welded pipe and will have the capability to be flushed.

Once installed, the radar leak-detection system, including all instrumentation, waveguide, and other associated equipment, will be tested as a system during initial startup. The system will be checked and verified for the proper level indication and alarm response. The radar leak-detection system will subsequently be tested in accordance with WTP administrative program and calibration test procedures written specifically for this instrumentation.

3.3 Thermal Dispersion Level Measurement Leak-Detection Method

3.3.1 Leak-Detection Method

The leak-detection (level) switch method uses thermal dispersion technology. The measuring element of the level switch contains 2 temperature-sensitive probes in a vertical plane. One probe contains a heated resistance temperature detector (RTD), and the other probe contains an unheated RTD reference at a thermal difference when no liquid is present. Once liquid reaches the probes, the thermal difference decreases and is measured.

Sumps are designed to be dry with a liquid normally not present or wet with a liquid normally present. At a predefined level set point, the level switch electronics will generate a high-level alarm to the PCJ.

3.3.2 Installation and Functional Testing

Figure 5 shows a general sketch for the level switch configuration to detect liquid in a normally dry sump. The level switch electronics and element connector will be located in a C3 area where maintenance will be performed under administrative control. A pipe protects and supports (and physically guides replacement of) the level switch element from the connector to the pit sump. The level element probes are positioned to properly monitor for liquid at the open end of the pipe.

Once installed, this leak-detection system, including all instrumentation and other associated equipment, will be tested as a system during initial startup testing. The system will be checked and verified for the proper alarm response. The thermal-dispersion level switch will subsequently be tested in accordance with WTP administrative program and calibration test procedures written specifically for this instrumentation.

Figure 1 Bubbler Level Measurement for Sump

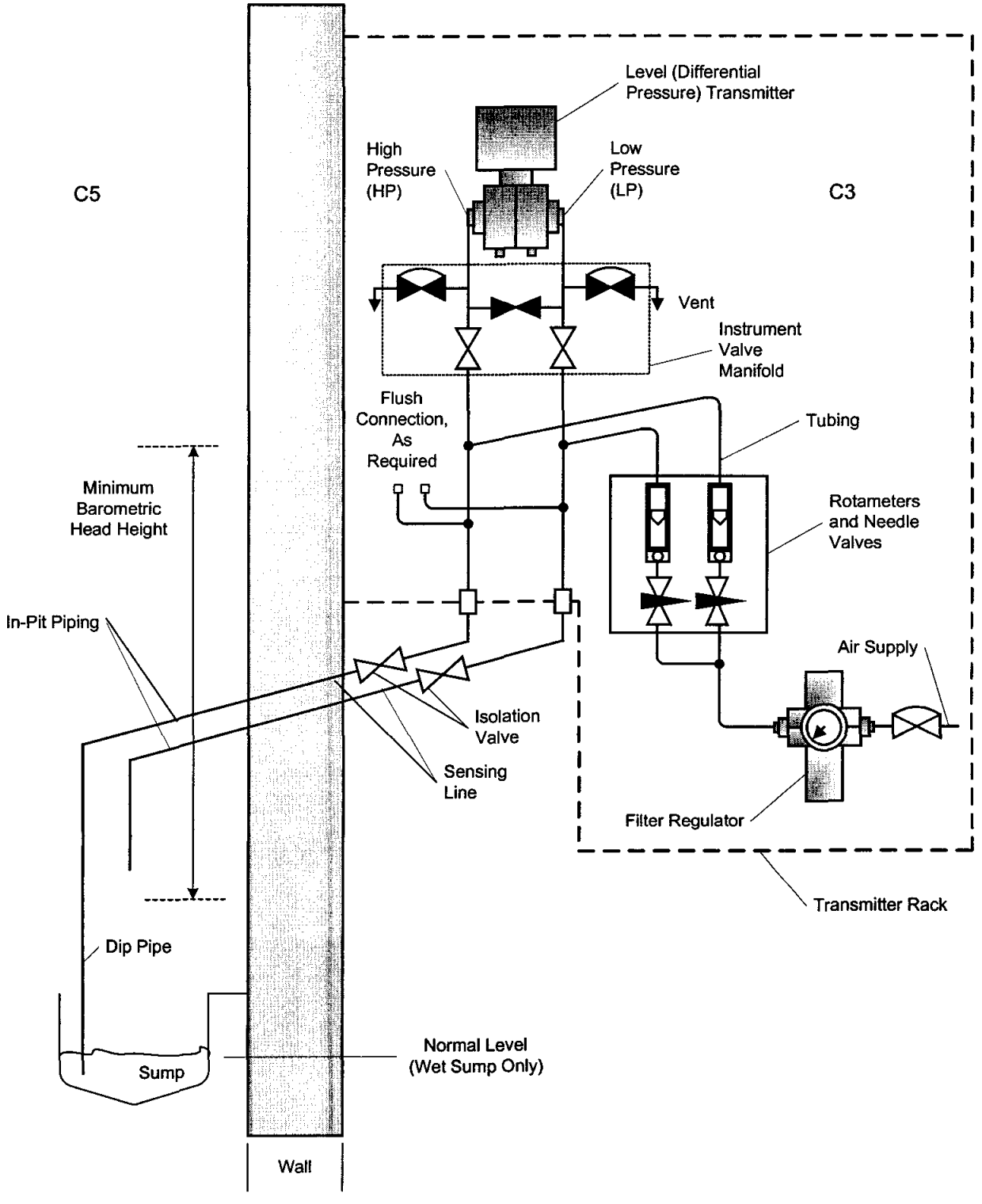

Figure 2 Radar Level Measurement for In-Cell Sumps

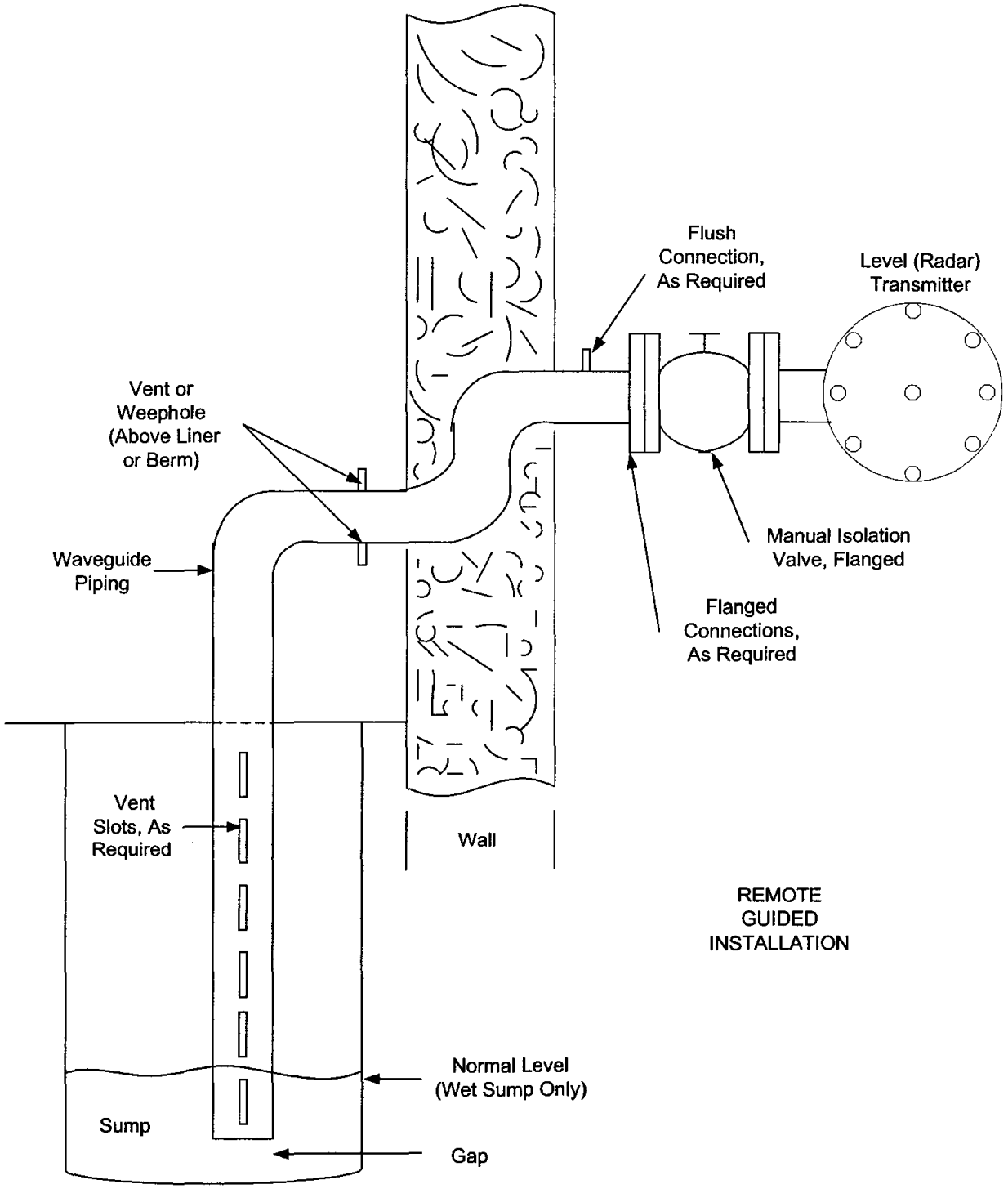

Figure 3 Radar Level Measurement for Out-Cell Sumps

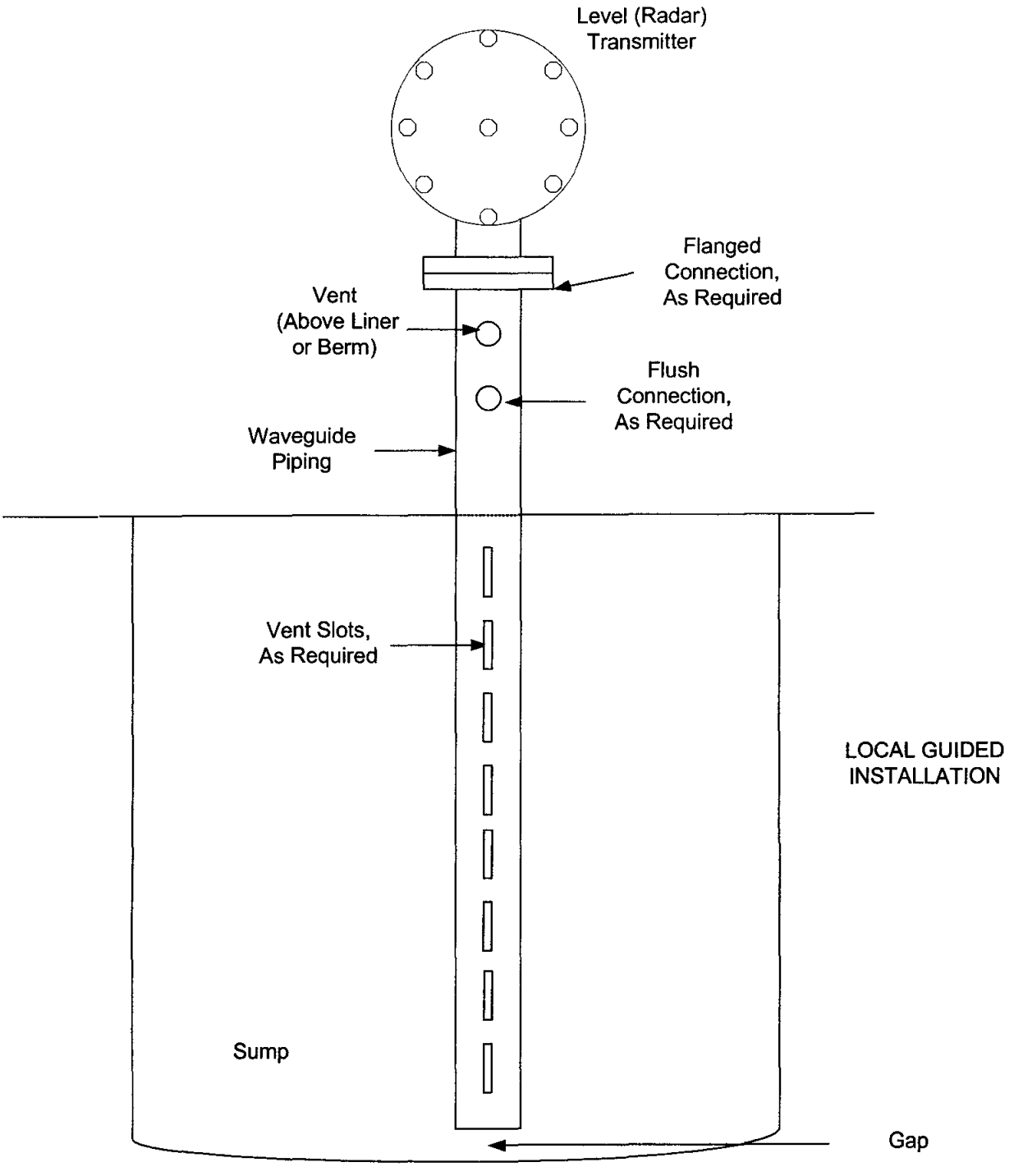

Figure 4 Radar Level Measurement for Out-Cell Sumps –Horn

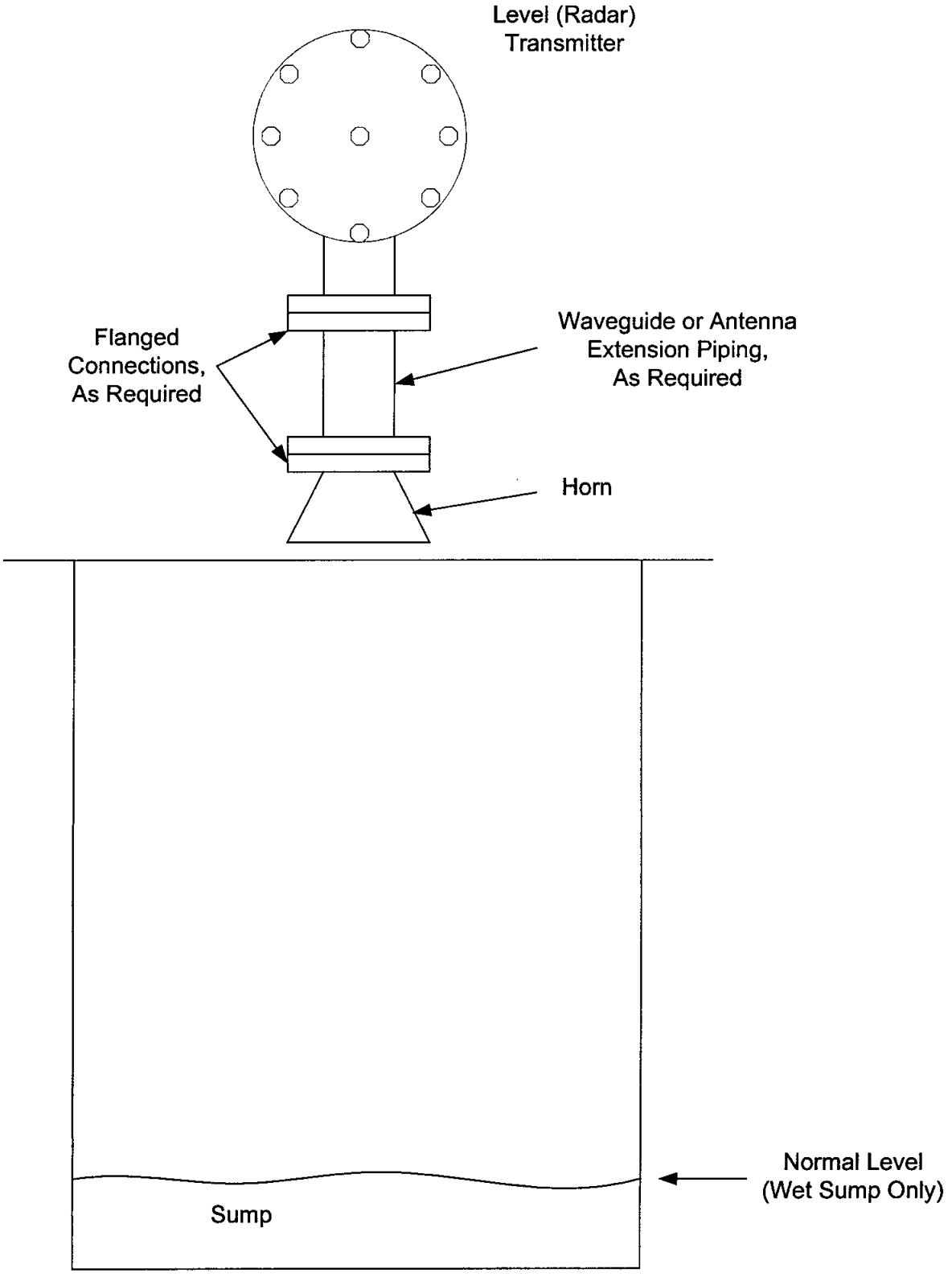

Figure 5 Thermal Dispersion Level Measurement for Sump

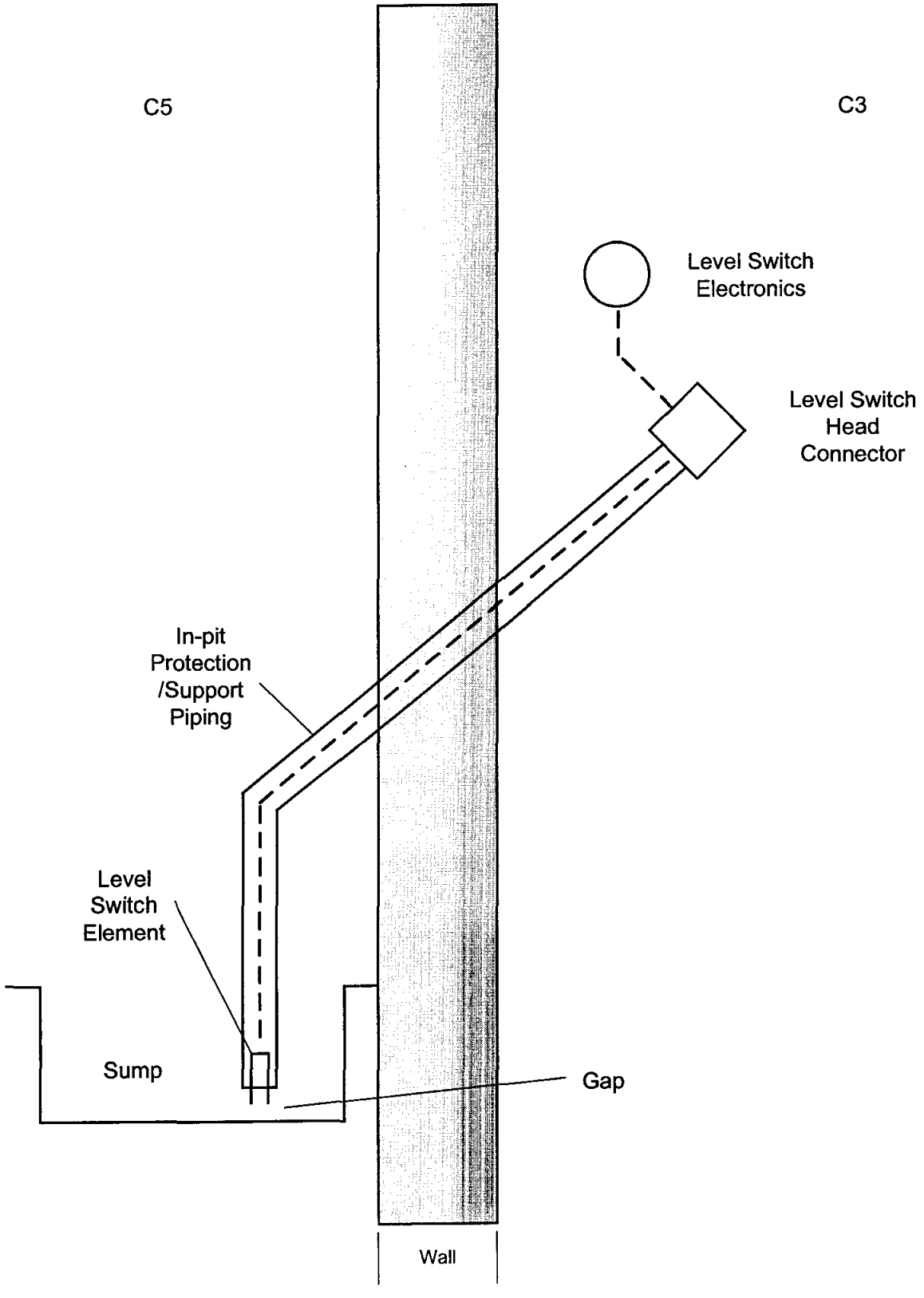

R10585721

ISSUED BY
RPP-WTP PDC

Document title: **Low-Point Leak Detection in Secondary Containment Systems including Buried Co-Axial Transfer Lines**

Contract number: DE-AC27-01RV14136

Department: Controls & Instrumentation

Author(s): Brad A Stiver Mark A Friedrich

Principal author signature: Brad A. Stiver

Document number: 24590-WTP-PER-J-02-002, Rev 3

Checked by: Henry Webber Henry Webber

Checker signature:

Date of issue: 8 June 2005

Issue status: Issued for Permitting Use

Approved by: Stephen E Anderson

Approver's position: C&I Engineering Manager

Approver signature: S.E. Anderson

MARK A. FRIEDRICH STATE OF WASHINGTON 32426 REGISTERED PROFESSIONAL ENGINEER

Mark A Friedrich 6-8-05

EXPIRES: 06

This bound document contains a total of 8 sheets

Mark Friedrich 6-8-05

Signature Date

River Protection Project
Waste Treatment Plant
2435 Stevens Center Place
Richland, WA 99352
United States of America
Tel: 509 371 2000

Notice

Please note that source, special nuclear and byproduct materials, as defined in the Atomic Energy Act of 1954 (AEA), are regulated at the U.S. Department of Energy (DOE) facilities exclusively by DOE acting pursuant to its AEA authority. DOE asserts, that pursuant to the AEA, it has sole and exclusive responsibility and authority to regulate source, special nuclear, and byproduct materials at DOE-owned nuclear facilities. Information contained herein on radionuclides is provided for process description purposes only.

History Sheet

Rev	Date	Reason for revision	Revised by
0	26 August 2002	Issued for Permitting Use	MCK/NJS
1	24 July 2003	Total rewrite; Issued for Permitting Use	MCK
2	16 May 2005	Issued to incorporate Open Pit Leak Pot	BAS
3	8 June 2005	Format changes	BAS

Contents

1 Introduction 1
2 Applicable Documents 1
3 Description 1
3.1 Low-Point Leak Detection Design 1

Figures

Figure 1 Low-Point Level Detection for Leak Pot (Inside Building) 3
Figure 2 Low-Point Level Detection for Leak Pot (Open Pit) 4

1 Introduction

The purpose of this document is to describe the leak detection methodology that will be used to meet the requirements of Washington Administrative Code (WAC) 173-303-640 (4)(c)(iii). The scope of this document covers the description of the leak detection technology employed for the leak detection of buried and embedded co-axial transfer lines for the Hanford Tank Waste Treatment and Immobilization Plant (WTP) transfer lines. The installation and functional testing of this technology is also described herein.

2 Applicable Documents

WAC 173-303 - Dangerous Waste Regulations.

3 Description

The WTP facility will use many sloped buried and embedded co-axial transfer lines within facilities, between on-site facilities, or between on- and off-site facilities. Co-axial transfer lines at the WTP will employ a low-point leak detection design.

3.1 Low-Point Leak Detection Design

3.1.1 Leak Detection Method

The low-point leak detection method employs leak pots at the low points of co-axial transfer lines, in such a way that the outer pipe will drain into them, in the event that the primary (inner) pipe leaks. In each of the leak pots there will be a level switch (for example, ultrasonic gap, thermal dispersion, conductivity cable, and so forth) to detect leaks. Once the sensing element of the switch detects a leak, the switch will send a signal to the Plant Control System (PCS) to activate a leak detection alarm.

For leak pots located inside the building, the leak pot is a horizontal stainless steel pipe with capped ends, drain, overflow drain, and weir (Figure 1). The drain located between the weir and the closest end cap (that is, the containment side of the weir), is normally closed by a plug attached to a rod extending to a C3 area above the leak pots. The overflow drain, located in the **non-containment** side of the weir, will have a similar apparatus, but will remain open. The leak detector will be a level switch and will be located in the **containment** side of the weir.

For leak pots located in an open pit the leak pot is a horizontal stainless steel pipe with capped ends, drain, overflow drain, and weir (Figure 2). The drain located between the weir and the closest end cap (that is, the containment side of the weir), is normally closed by a plug attached to a rod extending above the leak pots. The overflow drain, located in the **non-containment** side of the weir, will have a similar apparatus. The overflow drain will remain closed in open pit installations, to be opened by operations personnel as needed after placement of appropriate overflow containment receptacle. The leak detector will be a level switch and will be located in the **containment** side of the weir.

3.1.1.1 Installation and Functional Testing

Prior to installation, the leak detection switch will be tested for functionality. The sensing element of the device will be placed into a receptacle containing liquid; in such a way, that it will sense that liquid is present and signal to the PCS. Upon verification of functionality, the leak detection element will be installed into the leak pot. For leak pots located inside the building, the leak detection switch will be installed in the C3 area for maintenance access. For leak pots located in an open pit, the leak detection switch will be installed in the leak pot at the pit. The leak detection system (probe and switch) will be periodically self-tested in-situ, to facilitate continuous operability.

Figure 1 **Low-Point Level Detection for Leak Pot (Inside Building)**

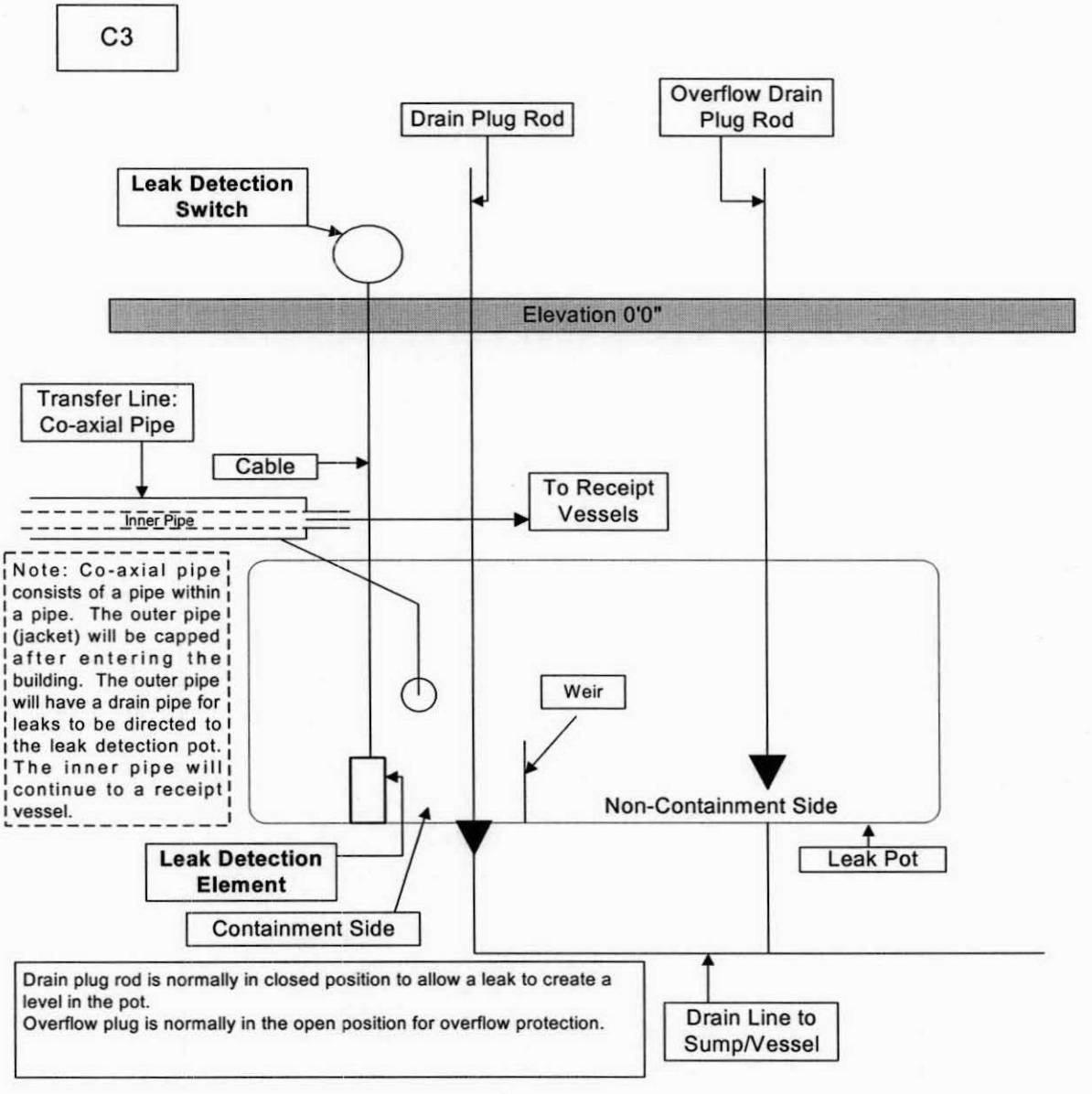

Figure 2 Low-Point Level Detection for Leak Pot (Open Pit)

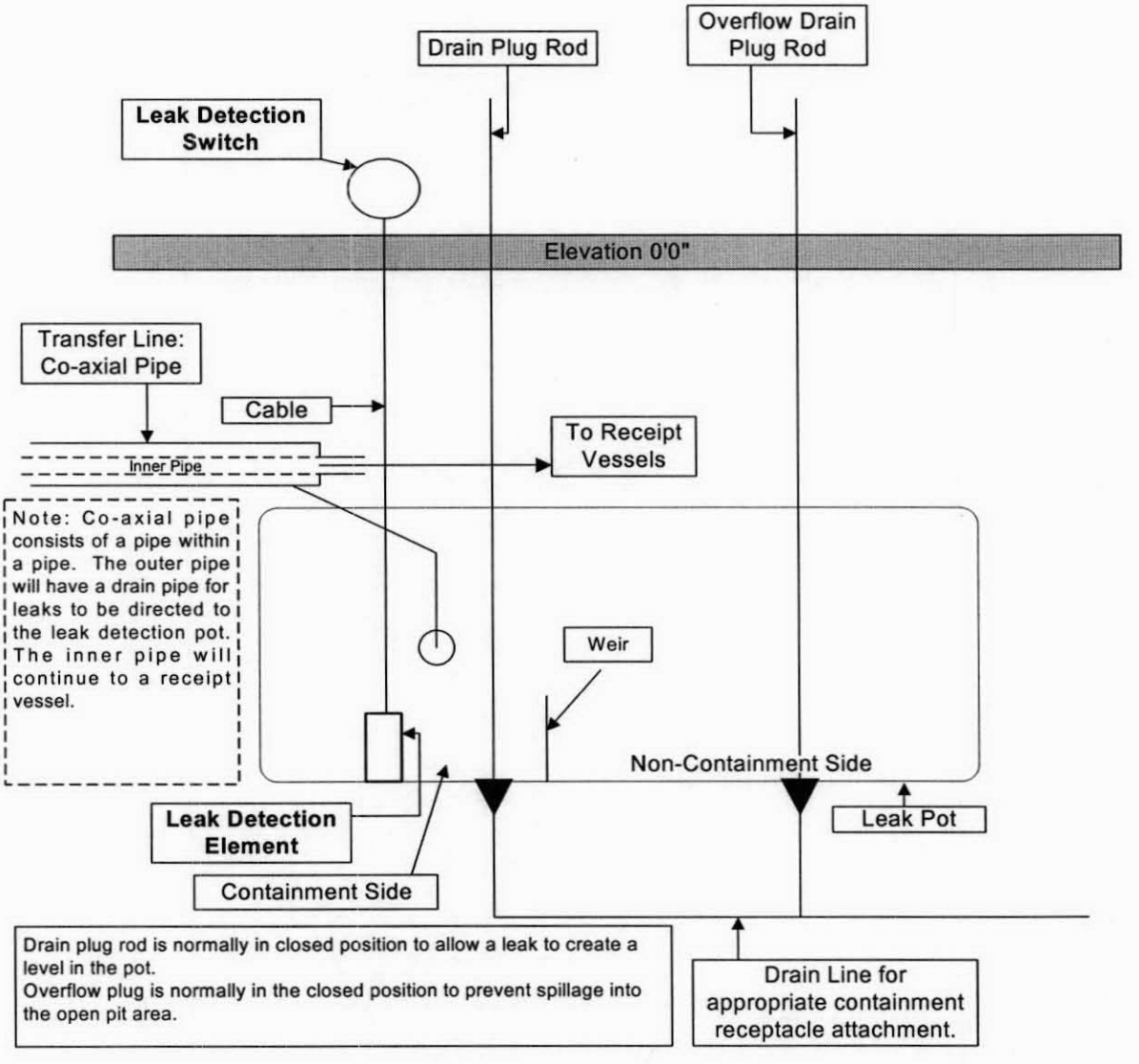

R10111501

DOCUMENT INFORMATION

Sheet 1 of 1

The following information is required when submitting a document to PDC for issuance.	**Correspondence (CCN) No:** _____ **Document No:** 24590-WTP-PER-PS-02-001 **Rev:** 4

Project Information (Check Applicable Box)

☐ Balance of Facilities ☐ HLW Vitrification ☐ Analytical Laboratory ☒ Across all areas

☐ Pretreatment ☐ LAW Vitrification ☐ External Interfaces

Document is applicable to ALARA (as determined by the originator)? ☒ Yes ☐ No

Applicability to ALARA means that the item has the potential to affect doses, contamination levels, or releases to the environment. (See 24590-WTP-GPP-SRAD-002, *Application of ALARA in the Design Process*, sections 4.1 and 4.2 for more information.)

Subject code(s): _____ (for correspondence only)

ACTION ITEM INFORMATION (for correspondence other than meeting minutes)

Commitments: ☐ Yes ☐ No (if yes, brief description below)

_____

_____

Tracked by RITS

Commitment Owed to: _____ Due Date: _____

Actionee(s)			

Tracked by PADC

Written Response Required: ☐ Yes ☐ No

Owed to: _____ Due Date: _____

This correspondence closes action on Correspondence Number _____

☐ Subcontract Files _____ Copies

☐ PAAA Coordinator MS14-4B

☐ Contains SENSITIVE Information

Additional Departmental Info (to facilitate keyword search)

Internal ☐ DNFSB ☐ ORP ☐ OSR ☐ WDOE ☐ WDOH ☐ Other _____

Special Instructions for PDC

Submitted to PDC w/o A Master Distribution Schedule
LA 8/14/03

8/14/03

☒ Processed Data Entry ☐ Copied QA ☐ Scanned ☐ Filed

Document title: **Ancillary Equipment Pipe Support Design**

Contract deliverable number: Contract deliverable number; if none, delete table row

Contract number: DE-AC27-01RV14136

Department: Department title

Author(s): Jack Shen

ISSUED BY RPP-WTP PDC INIT 8/14/03 DATE

Principal author signature:

Document number: 24590-WTP-PER-PS-02-001, Rev 4

Checked by: Jeffery Miller

Checker signature:

Date of issue: 13 August 2003

Issue status: Issued for Permitting Use

Approved by: Mark Myatt

Approver's position: Discipline Engineering Manager

Approver signature:

JACK KWANG-DOW SHEN STATE OF WASHINGTON 20840 REGISTERED PROFESSIONAL ENGINEER EXPIRES: 6-25-2004

08/13/03

This bound document contains a total of 14 sheets

River Protection Project
Waste Treatment Plant
2435 Stevens Center Place
Richland, WA 99352
United States of America
Tel: 509 371 2000

Notice

Please note that source, special nuclear, and byproduct materials, as defined in the Atomic Energy Act of 1954 (AEA), are regulated at the US Department of Energy (DOE) facilities exclusively by DOE acting pursuant to its AEA authority. DOE asserts, that pursuant to the AEA, it has sole and exclusive responsibility and authority to regulate source, special nuclear, and byproduct materials at DOE-owned nuclear facilities. Information contained herein on radionuclides is provided for process description purposes only.

History Sheet

Rev	Date	Reason for revision	Revised by
0	09/06/02	Issue for Permitting Use	Jack Shen
1	12/19/02	Including Mixed Waste Transfer Pipe Support Details	Jack Shen
2	04/07/03	Issued for Permitting Use	Jack Shen
3	07/25/03	Issued for Permitting Use	Jack Shen
4	08/13/03	Issued for Permitting Use	Jack Shen

Contents

1 Introduction 1
2 Applicable Documents 1
2.1 Codes and Standards 1
3 Description 1
3.1 Design Methodology, Material, Loads, and Load Combinations 1
3.2 Mixed Waste Transfer Lines 2
3.3 Typical Details 3

Figures

Figure 1 Typical Pipe Standard Support Detail 1 ---------- 4
Figure 2 Typical Pipe Standard Support Detail 2 ---------- 5
Figure 3 Typical Pipe Engineered Support Detail 1 ---------- 6
Figure 4 Typical Mixed Waste Transfer Pipe Support and Fabrication Details ---------- 7
Figure 5 Typical Mixed Waste Transfer Piping Installation and Fabrication Details ----- 8
Figure 6 Typical Mixed Waste Transfer Line Wall Penetration Details ---------- 9
Figure 7 Typical Pipe Fabrication Drawing with Pipe Supports ---------- 10

1 Introduction

In compliance with the Washington Administrative Code (WAC) 173-303 WTP dangerous waste tank systems have been designed to retain dangerous waste through a confinement system designed with sufficient strength and compatibility with the waste to ensure that it will not collapse, rupture, or fail.

This report describes and provides references to the design criteria, load definitions, load combinations, material of construction, and methodology for the analysis/design of Pretreatment (PT), High Level Waste (HLW), Low Activity Waste (LAW), and Analytical Laboratory (LAB) buildings with emphasis on ancillary equipment pipe supports. Several representative typical details of standard and engineered pipe supports, and one typical pipe fabrication drawing with pipe supports are included in this report.

2 Applicable Documents

2.1 Codes and Standards

2.1.1 ASME B31.3 Code, Process Piping.1996 Edition
2.1.2 ASME Boiler and Pressure Vessel Code, Section III
2.1.3 AISC M016-89 Manual of Steel Construction – Allowable Stress Design, ninth edition
2.1.4 AWS-D1.1 & -D1.6, Structural Welding Code
2.1.5 UBC, Uniform Building Code, 1997
2.1.6 MSS-SP-58, Pipe Hangers And Supports - Materials, Design And Manufacture
2.1.7 MSS-SP-69, Pipe Hangers And Supports - Selection And Application
2.1.8 MSS-SP-89, Pipe Hangers And Supports - Fabrication And Installation Practices
2.1.9 Safety Requirements Document, Volume II, 24590-WTP-SRD-ESH-001-02, Rev. 1d.

3 Description

3.1 Design Methodology, Material, Loads, and Load Combinations

Methodology	Codes and specifications: • PT, HLW, LAW, and LAB: General: ASME B31.3 (Ref. 2.1.1) ASME Section III, NF (Ref. 2.1.2) UBC (Ref. 2.1.5) Steel: AISC (Ref. 2.1.3)
Dead Loads and Thermal loads:	ASME B31.3 (Ref. 2.1.1) and SRD (Ref. 2.1.9)

Seismic Loads	• PT, HLW, and LAB: Site specific response spectra as specified in SRD (Ref. 2.1.9). Seismic Zone 2B (UBC, Ref. 2.1.5) • LAW: Seismic Zone 2B (UBC, Ref. 2.1.5)
Materials, Design And Manufacture	
• Steel	MSS-SP-58 (Ref. 2.1.6)
Selection & Application	
• Steel	MSS-SP-69 (Ref. 2.1.7)
Fabrication & Installation	
• Steel	MSS-SP-89 (Ref. 2.1.8)
Load Combinations	
• Steel	Normal Operating Loads – Weight, or Weight + Thermal Occasional Loads – Normal Operating + Earthquake, or Normal Operating + Wind, or Normal Operating + Other Fluid Transient Load if exists
Special Protective Coating	Material for coatings will be compatible with the hazardous waste.

3.2 Mixed Waste Transfer Lines

Mixed Waste Transfer lines are buried in the ground. They are double containment piping consisting of 3" carrier piping and 6" encasement piping. They are analyzed according to ASME B31.3 Code for the design loads including weight effects, thermal expansion effects due to operating and environment temperature variations, seismic inertial and seismic anchor movement effects, and building settlement. In the seismic response spectrum analysis and flexibility analyses of 6" encasement piping, the soil properties are considered as soil springs and modeled in vertical, axial and lateral directions along the piping. In addition, the 6" encasement piping is also analyzed for seismic wave passage effects and vertical earth loads.

The 6" encasement piping is anchored by an anchor plate welded at the building wall penetration. Each anchor is designed for the total combined loadings from the buried double containment piping and the piping inside the building. The 3" carrier piping is supported by weight supports (one way-vertical support), plate type guide supports (two way-vertical and lateral supports) and three way supports (vertical, lateral and axial supports) as required. Those supports are installed between the 3" and 6" piping, and are required to limit the 3" pipe stresses and deflections so that the 3" and 6" piping will not interact with each other during operating conditions and an earthquake event. A weight support is a steel member welded to the side wall of 6" pipe. A plate type guide support is a steel plate welded to 3" pipe and cut to contact with the inside wall of the 6" pipe on both sides, at the lower half section. A three way support is provided by welding 4 lugs on the 6" pipe, two on each side of the plate type guide support. A

clearance at the bottom is maintained for every one of these supports so that it will not block potential drainage inside the 6" piping.

3.3 Typical Details

Figures 1 through 7 show several representative details related to ancillary equipment pipe support details and typical pipe fabrication drawing for PT, HLW, LAW, and LAB buildings.

Figure 1 – Typical Pipe Standard Support Detail 1

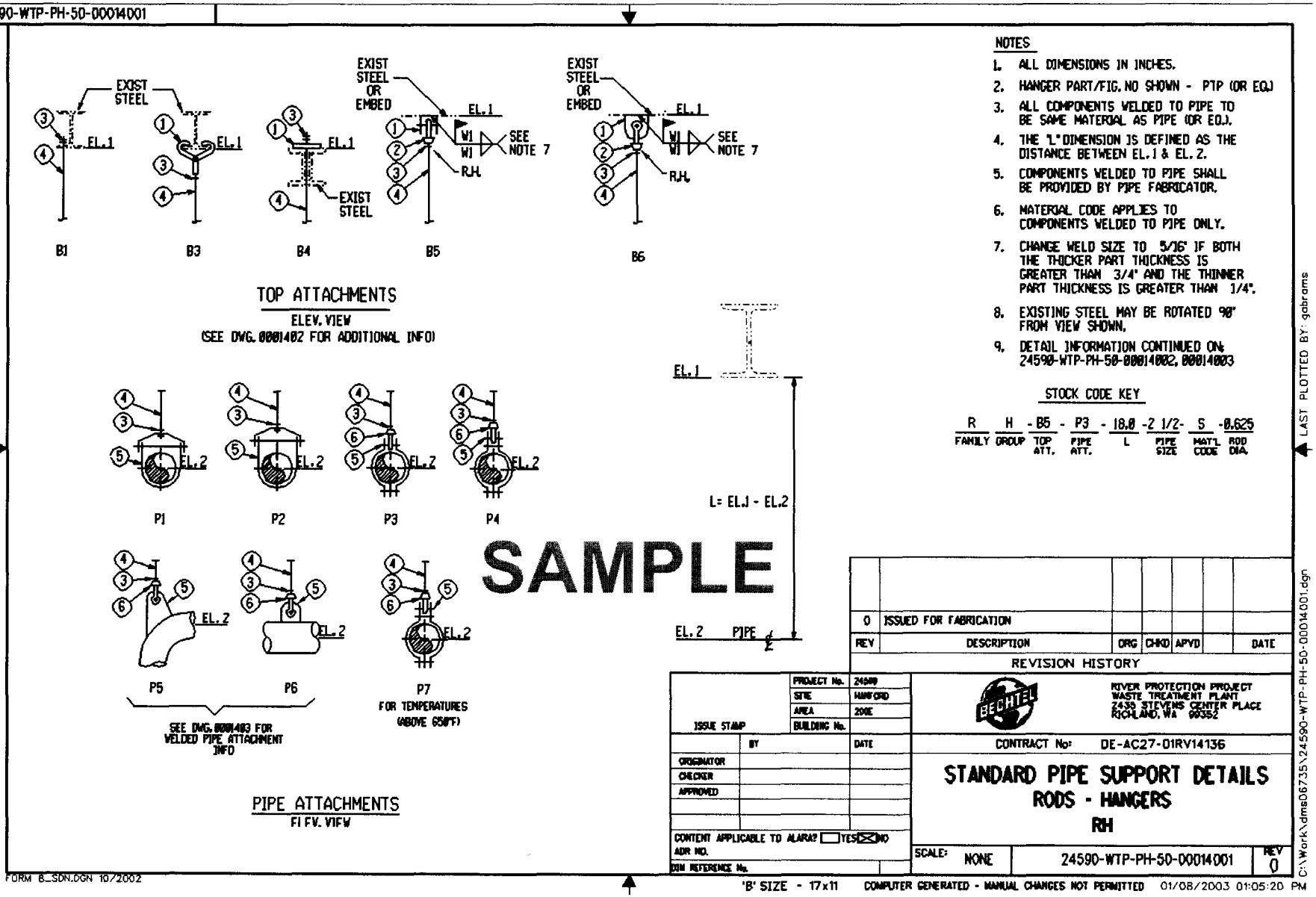

Figure 2 – Typical Pipe Standard Support Detail 2

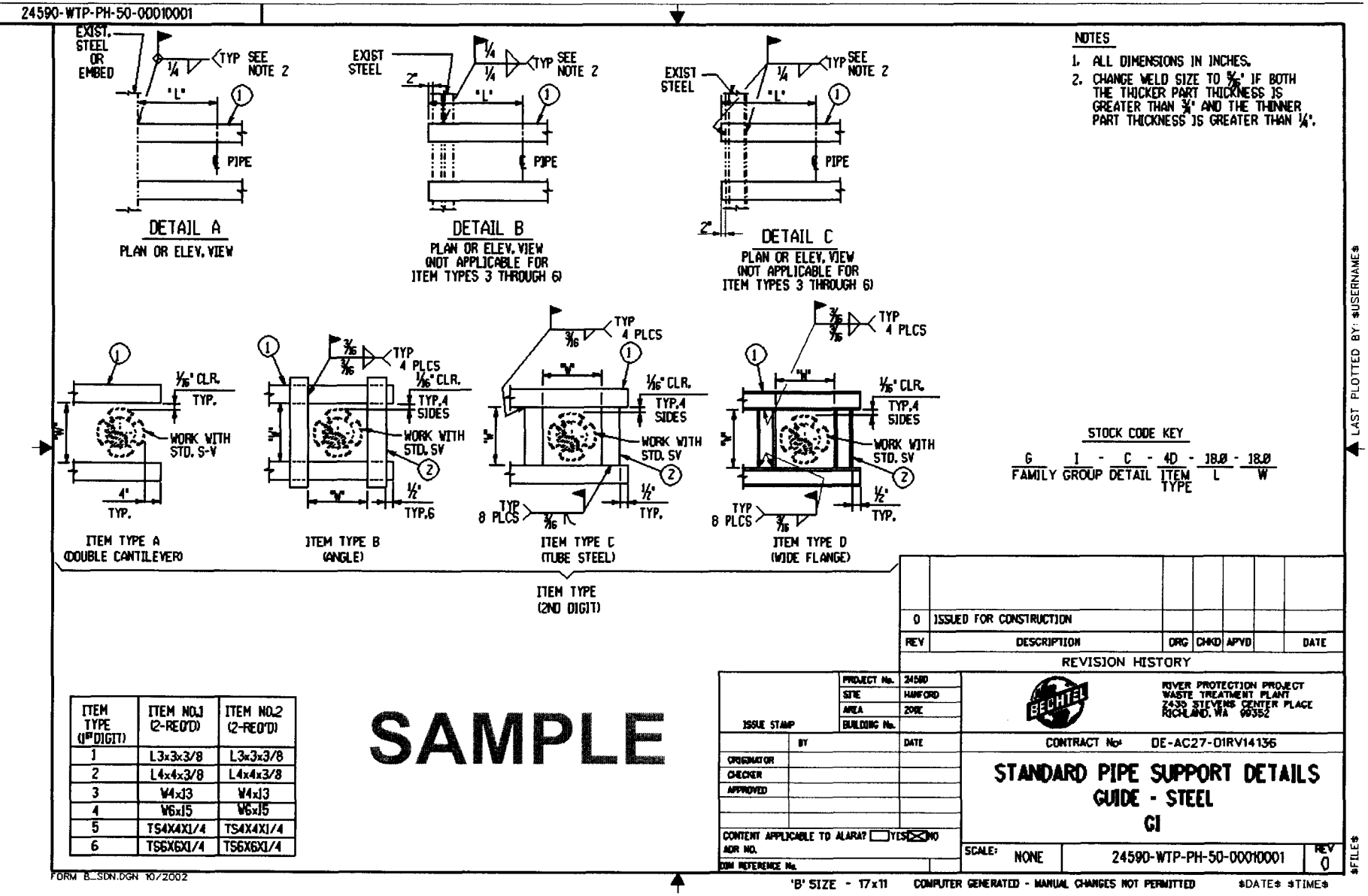

ITEM TYPE (1ST DIGIT)	ITEM NO.1 (2-REQ'D)	ITEM NO.2 (2-REQ'D)
1	L3x3x3/8	L3x3x3/8
2	L4x4x3/8	L4x4x3/8
3	W4x13	W4x13
4	W6x15	W6x15
5	TS4X4X1/4	TS4X4X1/4
6	TS6X6X1/4	TS6X6X1/4

Figure 3 – Typical Pipe Engineered Support Detail 1

ITM	QTY	DESCRIPTION
1.	2	L3X3X3/8 Length: 4"
2.	1	W6X20 Length: 4'-6 3/4"
3.	1	Plate 1/2" x 6-3/4" x 1'-0-1/2" Long (MAT'L A 36)
4.	2	W4X13 Length: 1'-10 11/16"
5.	2	W4X13 Length: 6 3/4"

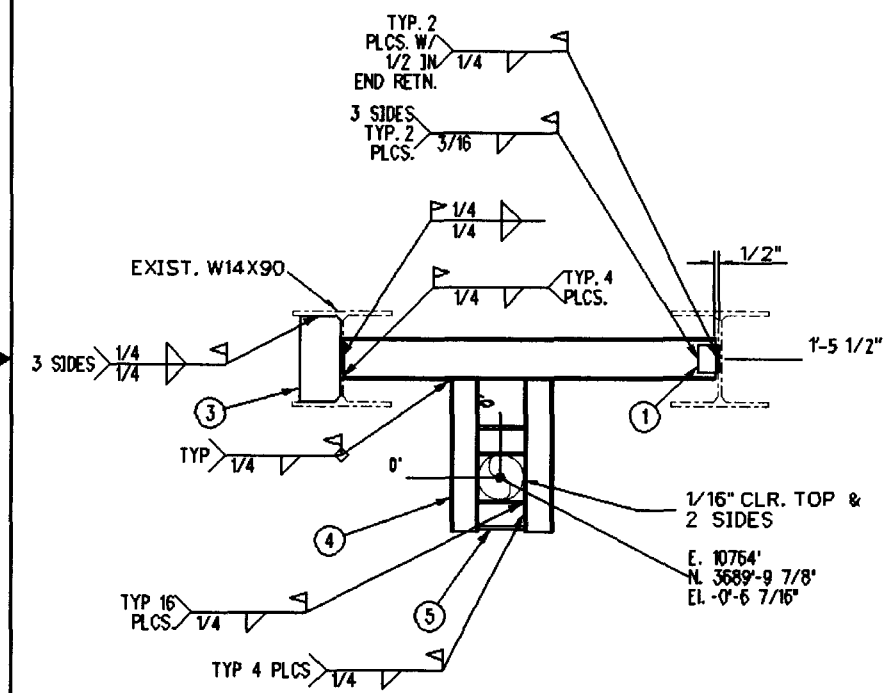

ELEVATION LOOKING NORTH

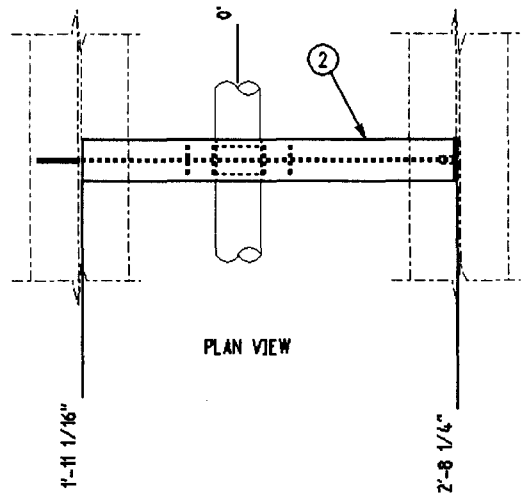

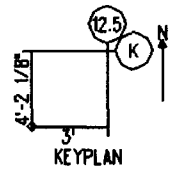

CONST. AREA: 10H

LINE SEQUENCE NO: NLD-WT-01477-S11B-6

STOCK CODE(S): LAW-NLD-H00077

NOTES:

1. FIELD WELDS REPRESENTED W/ HOLLOW FLAG
2. SUPPORT PAINTING REQUIREMENT
   ☒ INDOORS ☐ OUTDOORS

SAMPLE

CM QUALITY LEVEL

BECHTEL

RIVER PROTECTION PROJECT
WASTE TREATMENT PLANT
2435 STEVENS CENTER PLACE
RICHLAND, WA 99352

REV	DESCRIPTION	DRN	CHKD	RVWD	APVD	DATE
0	ISSUED FOR CONSTRUCTION					

CONTRACT No: DE-AC27-01RV14136 | JOB No: 24590

CONTENT APPLICABLE TO ALARA? ☐ YES ☒ NO
ADR NO. REV

SEIS CAT	PIPE SUPPORT DWG No.	REV
SC-III	24590-LAW-NLD-H00077	0

FORM B_SUP.DGN 5/2003

COMPUTER GENERATED - MANUAL CHANGES NOT PERMITTED 06/12/2003 01:43:05 PM

C:\Work\dms06980\NLD_WT_01477_S11B_6_LAW-NLD-H00077_0.sht

Figure 4 – Typical Mixed Waste Transfer Pipe Support and Fabrication Details

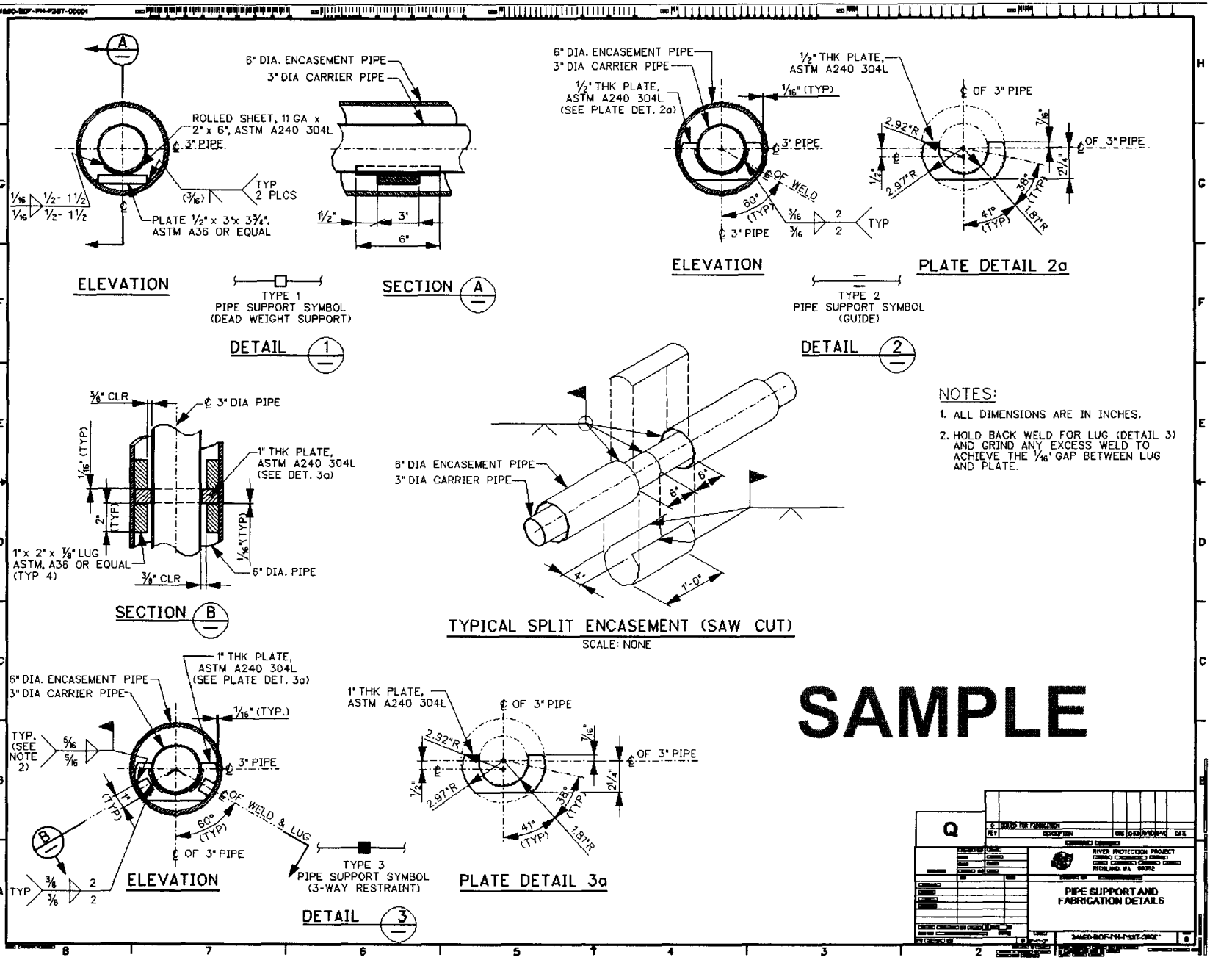

Figure 5 – Typical Mixed Waste Transfer Piping Installation and Fabrication Details

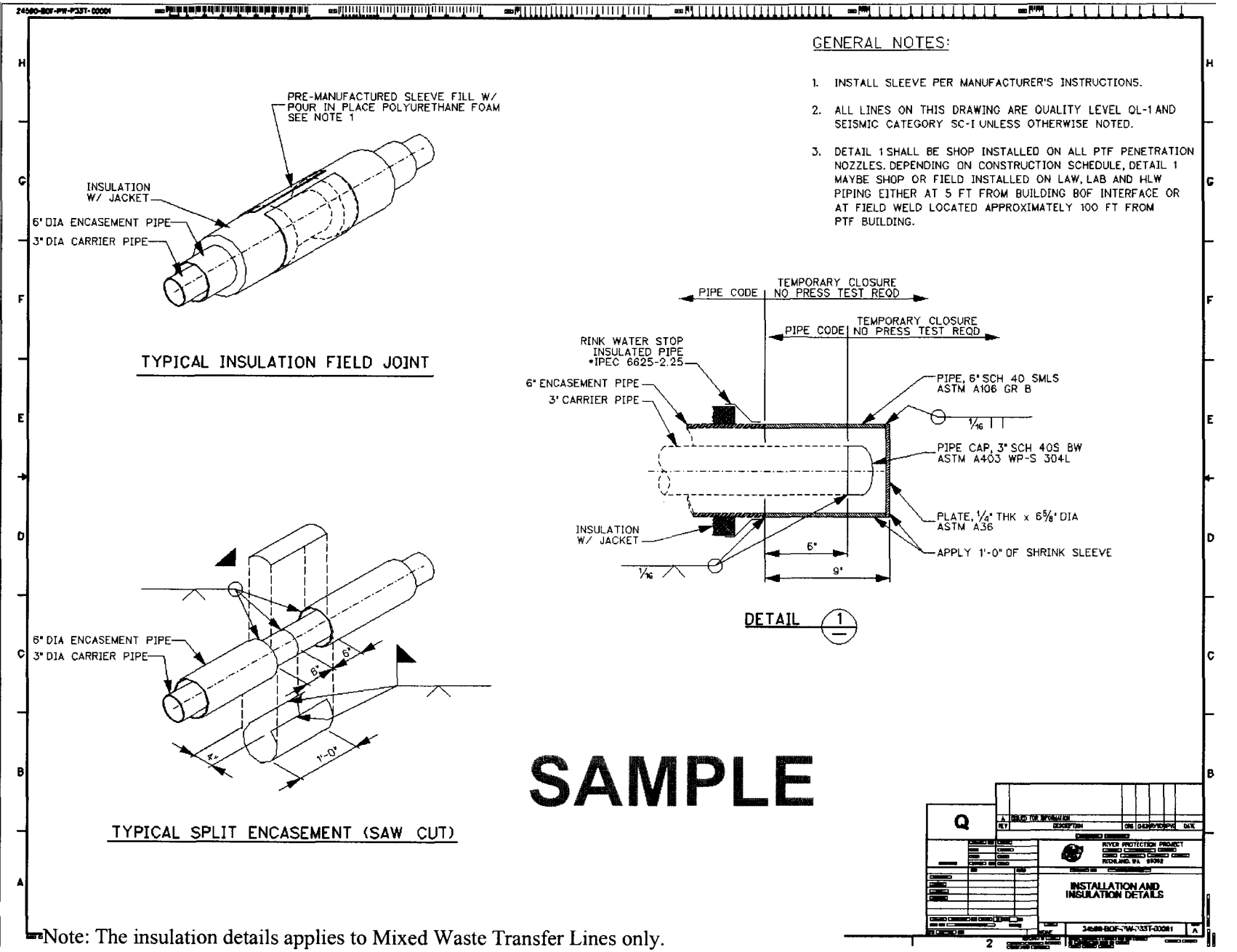

Note: The insulation details applies to Mixed Waste Transfer Lines only.

Figure 6 – Typical Mixed Waste Transfer Line Wall Penetration Details

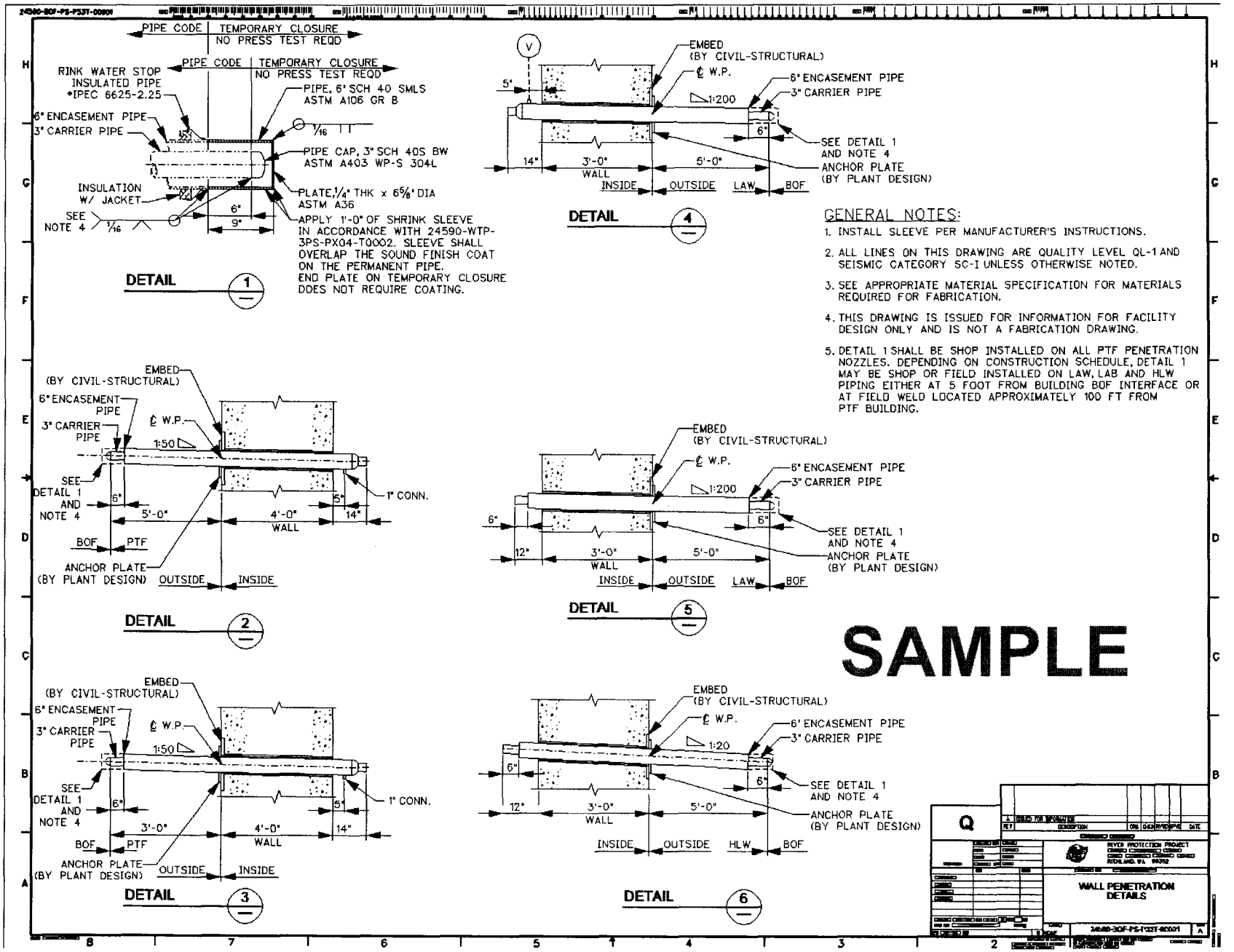

Figure 7 – Typical Pipe Fabrication Drawing with Pipe Supports

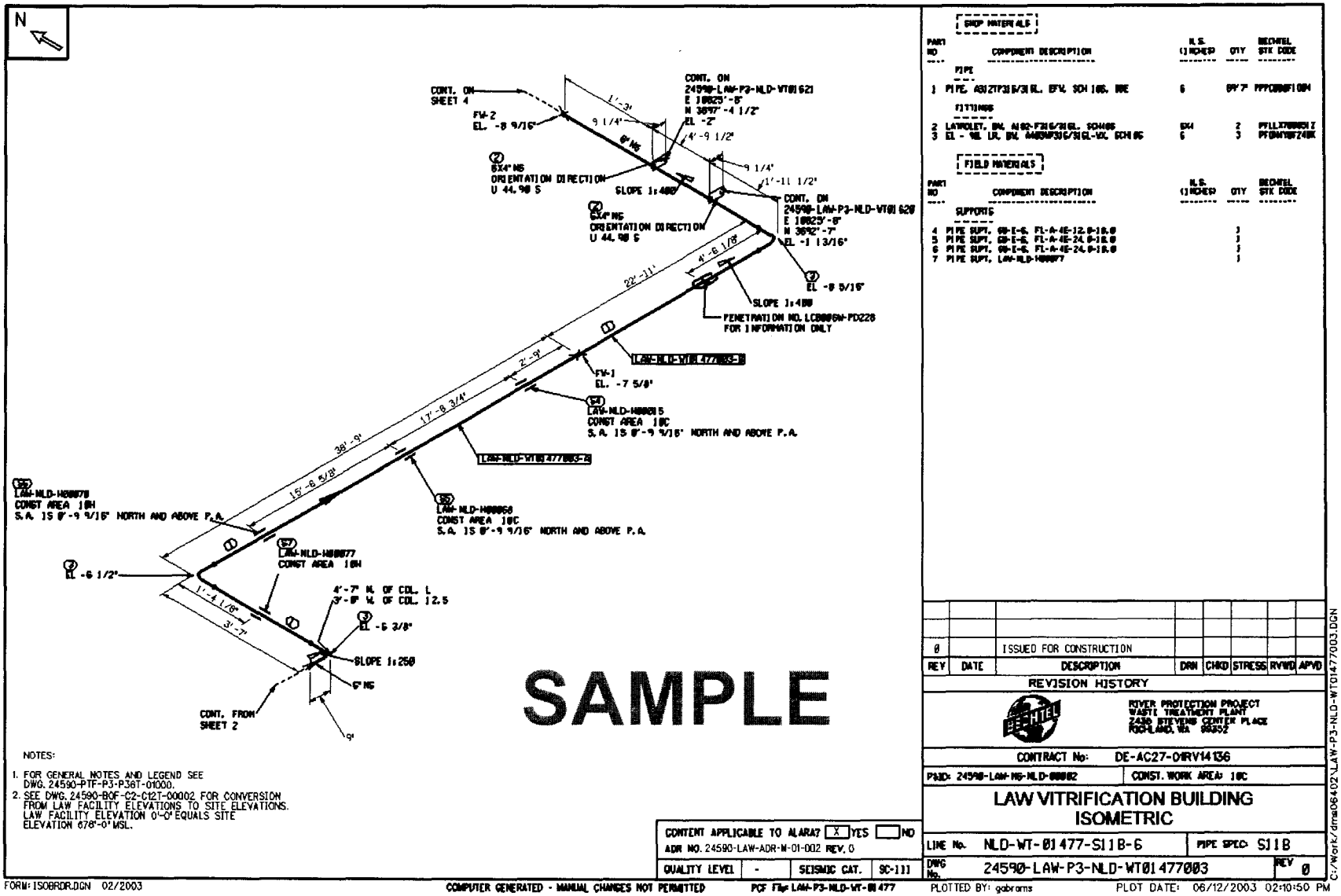

Attachment 51 – Appendix 7.7

WTP Common Specifications

The following drawings have been incorporated into Appendix 7.7 and can be viewed at the Ecology Richland Office. **New drawings are in bold lettering.**

Drawing/Document Number	Description
24590-WTP-3PS-AFPS-TP006, Rev 0	Engineering Specification for Field Applied Special Protective Coatings for Secondary Containment Areas
24590-WTP-3PS-G000-TP002, Rev 4	Engineering Specification for Positive Material Identification (PMI)
24590-WTP-3PS-HD00-TP001, Rev 0	Maintenance Decontamination Equipment
24590-WTP-3PS-M000-TP001, Rev 0	Engineering Specification for Air Displacement Slurry Pumps
24590-WPT-3PS-MACS-TP004, Rev 0	Engineering Specification for High Pressure Centrifugal Blowers
24590-WTP-3PS-MBTV-TP001, Rev 0	Engineering Specifications for Thermal Catalytic Oxidizers/Reducers
24590-WTP-3PS-MCE0-TP002, Rev 2	Engineering Specification for Process Ejector / Eductor
24590-WTP-3PS-MES0-TP001, Rev 1	Engineering Specification for Shell and Tube Heat Exchanger
24590-WTP-3PS-MKE0-TP001, Rev 0	Engineering Specification for Wet Electrostatic Precipitators
24590-WTP-3PS-MKH0-TP002, Rev 1	Engineering Specification for HEPA Filters
24590-WTP-3PS-MPC0-TP001, Rev 0	Engineering Specification for Centrifugal Pumps to Meet Requirements of API Standard 610, Eighth Edition, and for Quality Levels QL-1 and QL-2
24590-WTP-3PS-MPC0-TP002, Rev 1	Engineering Specification for General Centrifugal Pumps to Meet Requirements of ASME B73.1M-1991 and ASME B73.2M-1991 for Commercial (CM) Components
24590-WTP-3PS-MPC0-TP003, Rev 1	Engineering Specification for Sealless Centrifugal Pumps to Meet Requirements of API Standard 685,1st Ed, Quality Levels QL-1& 2)
24590-WTP-3PS-MPC0-TP008, Rev 0	Engineering Specification for Vessel-Mounted Vertical Transfer Pumps-LAW Facility
24590-WTP-3PS-MPC0-TP009, Rev 1	**Engineering Specification for Vessel Mounted Vertical Transfer Pumps - HLW Facility**
24590-WTP-3PS-MPVS-TP001, Rev 1	Engineering Specification for Submersible Centrifugal Sump Pumps
24590-WTP-3PS-MTF5-TP001, Rev 0	Engineering Specification for Field-Erected Tanks Design and Fabrication
24590-WTP-3PS-MV00-TP001, Rev 2	Engineering Specification for Pressure Design and Fabrication
24590-WTP-3PS-MV00-TP002, Rev 2	Engineering Specification for Seismic Qualification Criteria for Pressure Vessels
24590-WTP-3PS-MV00-TP003, Rev 2	Engineering Specification for Pressure Vessel Fatigue Analysis
24590-WTP-3PS-MWK0-TP001, Rev 0	Engineering Specifications for Activated Carbon Bed Absorber
24590-WTP-3PS-MX00-TP001, Rev 2	Engineering Specification for Process Bulge Design and Fabrication
24590-WTP-3PS-PX04-TP001, Rev 1	Engineering Specification for Shop Applied Fusion Bonded Epoxy Coating for Underground Carbon Steel Pipe
RESERVED	RESERVED

R10180724

RIVER PROTECTION PROJECT – WASTE TREATMENT PLANT

ENGINEERING SPECIFICATION

FOR

FIELD APPLIED SPECIAL PROTECTIVE COATINGS FOR SECONDARY CONTAINMENT AREAS

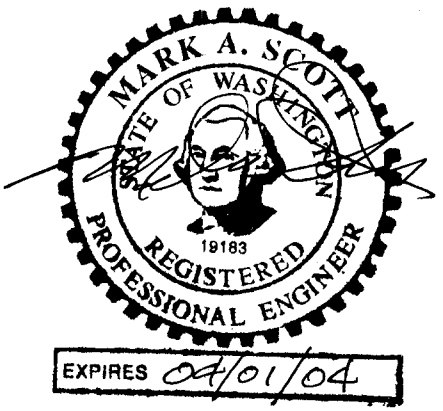

Content applicable to ALARA? ☐ **Yes** ☒ **No**

ADR No. **Rev**

Quality Designator
CM
DOE Contract No. DE-AC27-01RV14136

NOTE: Contents of this document are Dangerous Waste Permit affecting.

REV	DATE	REASON FOR REVISION	BY	CHECK	REVIEW	QA	APEM/DEM
0	12/5/03	Issue for Permitting Use	[signature]	[signature]	NA	NA	[signature]

SPECIFICATION No. **Rev**
24590-WTP-3PS-AFPS-TP006 0

12/16/03
Processed: Data Entry ☐ Copied/ QA ☒ Scanned ☐ Filed
12/16/03

ISSUED BY
RPP-WTP PDC
[signature] 12-16-03
INIT DATE

Note: Please note that source, special nuclear and byproduct materials, as defined in the Atomic Energy Act of 1954 (AEA), are regulated at the U.S. Department of Energy (DOE) facilities exclusively by DOE acting pursuant to its AEA authority. DOE asserts, that pursuant to the AEA, it has sole and exclusive responsibility and authority to regulate source, special nuclear, and byproduct materials at DOE-owned nuclear facilities. Information contained herein on radionuclides of provided for process description purposes only.

Contents

1 Scope 1
2 General 1
2.1 Responsibility 1
2.2 Surfaces Not To Be Coated 2
2.3 Definitions 3
2.4 Safety 5
3 Applicable Documents 5
3.1 Codes and Standards 5
4 Submittals 7
5 Quality Assurance 9
5.1 General 9
6 Materials 11
6.1 Coating Materials 11
6.2 Patching/Filler Materials 12
6.3 Batch Information 13
6.4 Abrasives 13
6.6 Coating Over Stainless Steel (SS) 14
7 Application 14
7.1 General 14
7.2 Pre-Surface Preparation 15
7.3 Surface Preparation 16
7.4 Coating Application 18
7.5 Remedial Work 19
8 Inspection 20
8.1 General 20
8.2 Surface Preparation Inspection 22
8.3 Coating Application 22
9 Storage, Handling and Shipping 23
9.1 Coating Materials 23
10 Documentation 24
11 Design Changes Incorporated by Reference 25

Appendices

Appendix A Supplier Quality Assurance Program Requirements Data Sheet A-1

Appendix B WTP Project Special Protective Coating (SPC) Material Prequalification Requirements for Secondary Containment B-1

Appendix C Table 1 Secondary Containment Coating Systems C-1

Appendix C Table 2 Secondary Containment Prequalified Coating Materials C-2

Appendix D Room Finish Schedule Drawing References D-1

Appendix E Color Scheme E-1

Appendix F Coating Manufacturer's Product Identity Certification Record F-1

Appendix G Surface Preparation and Coating Inspection Form G-1

Appendix H Manufacturer's Standard Coating Data Sheet H-1

Appendix I - Secondary Containment Installation Details I-1

1 Scope

1.1 This specification defines the minimum requirements for the field application of Special Protective Coating's (SPC's) applied onto concrete and steel surfaces that have been identified as a Secondary Containment area. The coating systems for concrete and steel surfaces are identified in Appendix C Table 2 and Appendix D of this specification. The CONTRACTOR shall identify the areas requiring secondary containment coatings in the appropriate room finish schedule for each facility (i.e., LAW, HLW, PTF, LAB & BOF). Unless indicated elsewhere in the subcontract documents, the field coating Work shall include-

- Touch up of shop or field coated carbon steel embeds prior to application of identified secondary containment coating system.
- Surface preparation and application of the applicable coating system for concrete and steel surfaces. Corner coving on floor/wall, wall/wall corners, around concrete, steel embed attachments, grouted anchor bolts and other items that create a corner or sharp transition in coating system direction.
- Saw cutting and chipping concrete as required by applicable installation detail.
- Surface preparation and application of a primer/sealer/barrier coat on shop coated steel embeds that have been determined unsuitable for the installation location exposure conditions in the secondary containment enclosure area or incompatible with the specified secondary containment coating system.

1.2 Finish color shall be as noted in Appendix E.

1.3 All SPC's are designated as Commercial Grade and not important to safety (ITS). SPC quality program requirements must comply with DOE Order 414.1A as identified in Appendix A. The full order is not applicable (also refer to Section 5). **NQA-1 Quality Assurance requirements do not apply to the manufacture or application of SPC's.** However, SPC's used in high radiation areas (>2E8 rads over 40 years) shall be prequalified in accordance with Appendix B.

1.4 The Field application of all concrete and steel coatings will be performed at the WTP project located in the 200 East Area of the Hanford Site in Washington.

2 General

2.1 Responsibility

2.1.1 The SUBCONTRACTOR shall supply all personnel, coating materials and all necessary surface preparation, application, inspection and equipment including all Personal Protection Equipment (PPE), safety, rigging/access (as required), masking protection, containment, environmental control/dehumidification/ventilation equipment, area covering to protect from direct sunlight and inclement weather and all consumables. The SUBCONTRACTOR shall

perform all pre-surface preparation, surface preparation, coating application, inspection and documentation for all SPC work.

2.1.2 The SUBCONTRACTOR shall provide surface preparation of overlap or tie-in areas on stainless steel, concrete and carbon steel surfaces as required.

2.1.3 The SUBCONTRACTOR shall install flexible joint sealant, foam backer rod, bond breaker tape and material where specifically identified for use by the CONTRACTOR.

2.1.4 The SUBCONTRACTOR shall store all coating materials in accordance with this Specification and CONTRACTOR accepted procedures. The coating system and associated coating materials shall be in accordance with Appendix C Table 1 Secondary Containment Coating Systems, Table 2 Secondary Containment Coating Materials and Appendix D Room Finish Schedule Drawing references or as otherwise identified by the CONTRACTOR. All coating materials shall be used on a first in first out basis where the oldest batch of any given material or component is used before batches with a later expiration date.

2.1.5 The SUBCONTRACTOR shall perform all inspections and tests contained in this Specification prior to acceptance by the CONTRACTOR.

2.1.6 The SUBCONTRACTOR shall provide application and inspection documentation for all coating Work accepted by the CONTRACTOR.

2.1.7 The SUBCONTRACTOR shall provide marking materials that are fully compatible with the coating system(s) specified. Marking materials shall be suitable for use on stainless steel.

2.1.8 The SUBCONTRACTOR shall provide environmental control equipment as necessary for surface preparation, coating application and curing.

2.1.9 The SUBCONTRACTOR shall only use inspection equipment that is currently calibrated and controlled by a calibration program accepted by the CONTRACTOR.

2.1.10 The SUBCONTRACTOR shall give CONTRACTOR a minimum of ten (10) working days written notice prior to the start of coating Work and coordinate all field coating Work with the CONTRACTOR on a daily basis prior to the start of daily coating Work.

2.1.11 The SUBCONTRACTOR shall give the CONTRACTOR at least twenty four (24) hours verbal notice for all agreed upon inspection witness and hold points.

2.2 Surfaces Not To Be Coated

2.2.1 The SUBCONTRACTOR shall verify weld hold-back areas on piping, hangers/supports, steel attachments, etc., in areas designated Secondary Containment prior to coating as follows.

- Four(4) inches for **field** welds

2.2.2 Rubber or similar nonmetallic parts.

2.2.3 Non-Ferrous metals unless otherwise specified.

2.2.4 Stainless Steel surfaces unless specifically required by the CONTRACTOR (areas where stainless steel is welded to carbon steel the coating overlap onto the stainless steel shall be at least 1" or as otherwise specified).

2.3 Definitions

2.3.1 Batch- A quantity of coating made in one production run. A unique batch number is assigned for each production run of the epoxy coating material, the curing agent, fillers and the thinner.

2.3.2 Bug Holes- Small regular or irregular cavities resulting from entrapment of air bubbles in the surface of formed concrete during placement and consolidation.

2.3.3 Curing Membrane - Materials applied to prevent the moisture in uncured concrete from evaporating too rapidly. Where Special Protective Coatings are being applied, the curing membranes or compounds shall not contain paraffin, oil, silicone or other contamination that could compromise proper coating adhesion.

2.3.4 CONTRACTOR- Means BECHTEL NATIONAL, INC. (BNI) and all of its authorized representatives acting in their professional capacities.

2.3.5 Dry Film Thickness (DFT)- The thickness of an applied coating, once dry or cured. Usually expressed in mils (each mil is 1/1000 of an inch). Measured using a wet film thickness gage and calculating dry film thickness based on coating material volume solids. Alternatively measured using an ultra sonic dry film thickness device or using a destructive test that cuts the dry film and optically measures the dry film thickness.

2.3.6 Fish Eyes (cratering)- Formation of holes or visible depression in the coating film. Usually from a contaminated particle on the surface prior to applying the coating.

2.3.7 Efflorescence- A white crystalline or powdery deposit on the surface of concrete. Efflorescence results from leaching of lime or calcium hydroxide out of the permeable concrete mass over time by water , followed by reaction with carbon dioxide and acidic pollutants.

2.3.8 Form Release Agents- Compounds such as glossy paint or other film forming release material applied to forms to allow easy removal of forms. Where Special Protective Coatings are being applied the form release agent shall not impart a residue of paraffin, oil, silicone or other contaminant onto the surface that could compromise proper coating adhesion.

2.3.9 Hydration- The reaction of water with the calcium silicate, aluminate or aluminoferrite components of fine cement grains, necessary for the setting and densifying of concrete. Hydration results in the formation of calcium hydroxide and colloidal gels which occupy a larger volume than the original cement.

2.3.10 Hydrostatic Pressure- The pressure exerted by water at rest.

2.3.11 Holiday- A Pinhole, skip, discontinuity, or void in the applied coating film.

2.3.12 Laitance- A thin, weak, brittle layer of cement and aggregate fines in a concrete surface. The amount of laitance is influenced by the degree of working or amount of water in the concrete.

For the application of Special Protective Coatings all laitance must be removed to sound, dense concrete.

2.3.13 Item- An all inclusive term used in place of any of the following: appurtenance, assembly, component, equipment, material, module, part, structure, sub-assembly, sub-system, system, unit or support systems.

2.3.14 Mfg. Std. Coating- A manufacturer's standard coatings system applied to off the shelf items or standard line items of routine manufacture that are not specifically manufactured for the WTP project.

2.3.15 NIST- National Institute of Standards and Technology.

2.3.16 "Non-Radiation" areas- For the purpose of Special Protective Coating (SPC), this is the quality designation for items **"NOT"** located in an area where radioactive material or items are transported, processed or stored or where they are located in an area where radioactive material or items are transported, processed or stored that are designated C2 and less, or R2 and less (24590-WTP-GPP-SRAD-0007 Classification of Areas provides the maximum dose for each "R" designation and mean airborne contamination level for each "C" designation).

2.3.17 Outgassing- The upward and outward emission of air or moisture vapor from concrete or coatings.

2.3.18 Pinhole- Minute hole visible in the applied coating without magnification, that appear to penetrate one or more layers of the coating film.

2.3.19 Profile- The surface roughness resulting from surface preparation by abrasive blasting or other CONTRACTOR accepted methods (Refer to Section 7.3.4.3)

2.3.20 "Radiation" areas- For the purpose of Special Protective Coating (SPC), this is the quality designation for items that are located in an area where radioactive material or items are transported, processed or stored that are designated C3 and greater, or R3 and greater. (24590-WTP-GPP-SRAD-0007 Classification of Areas provides the maximum dose value for each "R" designation and mean airborne contamination level for each "C" designation).

2.3.21 Sag- The running of freshly applied coating on a vertical surface due to being applied too thick.(Same definition for runs and drips).

2.3.22 Supplier Deviation Disposition Report (SDDR)- A standard WTP project document that can be used by a vendor or SUBCONTRACTOR to identify an actual or potential deviation or discrepancy that requires engineering evaluation and disposition prior to acceptance.

2.3.23 Surface Hardeners- Compounds applied to a concrete surface to improve hardness, and to decrease permeability.

2.3.24 Surface Porosity- Permeability of the surface that allows absorption of vapors, moisture, chemicals, and coating liquids. Small interconnected voids that allow fluids to penetrate an otherwise impervious material.

2.3.25 SUBCONTRACTOR- Means the company, corporation, partnership, individual, or other entity to which this subcontract (purchase order/material requisition) is issued, its authorized representatives, successors, and permitted assigns.

2.3.26 Training and Certification- Training to include an understanding of the specification, CONTRACTOR accepted Work procedures and manufacturer's published instructions. Certification to include a documented performance test demonstrating quality Work acceptable to the CONTRACTOR. (Refer to Sections 4.6, 5.1.3.2, 5.1.7, 7.1.2, 8.1.1.1 and Appendix A)

2.3.27 RPP-WTP- River Protection Project-Waste Treatment Plant

2.4 Safety

2.4.1 All surface preparation and coatings Work shall comply with all applicable environmental and safety provisions, laws, regulations of the City, County, and State, or the 200 East Area of the Hanford Site in Washington State (as applicable for site work) for the coating materials being used. Work being performed in the United Sates shall be in strict accordance with OSHA 29 CFR 1910, State and local safety and environmental requirements.

2.4.2 The SUBCONTRACTOR shall comply fully with OSHA Hazard Communication Standard 29CFR 1910. Material Safety Data Sheets (MSDS) for all materials, including thinners and cleaning solvents, shall be obtained from the materials manufacturer and made available at the place of application for review.

2.4.3 The Volatile Organic Compound (VOC) content of all materials shall comply with Federal, State and Local or other Regulatory requirements.

2.4.4 The SUBCONTRACTOR shall control safe working and environmental conditions employing items such as but not limited to barricades, masking/tarping, ventilation, dehumidification and safety watches to provide safe quality work from surface preparation through application, curing and inspection activities.

2.4.5 The SUBCONTRACTOR shall be responsible for proper disposal of liquid or solid waste generated during the work described herein (residual coating material, thinners, solvent, wipes, rags, etc.)

3 Applicable Documents

3.1 Codes and Standards

The latest applicable edition of the following codes, standards, specifications or WTP procedures form a part of this Specification.

3.1.1 American Society for Testing and Materials (ASTM)

ASTM E337 Test for Relative Humidity by Wet-and-Dry Bulb Psychrometer

ASTM D3912	Standard Test Method for Chemical Resistance of Coatings Used in Light-Water Nuclear Power Plants
ASTM D3276	Standard Guide for Painting Inspectors (Concrete and Masonry Substrates)
ASTM D4060	Standard Test Method for Abrasion Resistance of Organic Coatings by the Taber Abraser
ASTM D4082	Standard Test Method for Effects of Gamma Radiation on Coatings for Use in Light-Water Nuclear Power Plants
ASTM D4138	Test Method for Measurement of Dry Film Thickness of Protective Coating Systems by Destructive Means
ASTM D4228	Practice for Qualification of Journeyman Painters for Application of Coatings to Steel Surfaces of Safety Related Areas in Nuclear Facilities
ASTM D4227	Practice for Qualification of Journeyman Painters for Application of Coatings to Concrete Surfaces of Safety Related Areas in Nuclear Facilities
ASTM D4258	Practice for Surface Cleaning of Concrete for Coating
ASTM D4259	Practice for Abrading Concrete
ASTM D4262	Standard Test Method for pH for Chemically Cleaned or Etched Concrete Surfaces
ASTM D4263	Test Method for Indicating Moisture in Concrete by the Plastic Sheet Method
ASTM D4414	Practice for Measurement of Wet Film Thickness of Organic Coatings by Notch Gages
ASTM D4285	Test Method for Indicating Oil or Water in Compressed Air
ASTM D4417	Field Measurement of Surface Profile of Blast Cleaned Steel
ASTM D4537	Standard Guide for Establishing Procedures to Qualify and Certify Inspection Personnel for Coating Work Inspectors in Nuclear Facilities.
ASTM D4541	Standard Test Method for Pull-Off Strength of Coatings Using Portable Adhesion Testers
ASTM D4940	Test for Conductimetric Analysis of Water Soluble Ionic Contaminants of Blasting Abrasives
ASTM D5139	Standard Specification for Sample Preparation for Qualification Testing of Coatings Used in Nuclear Power Plants
ASTM D5144	Standard Guide for Use of Protective Coating Standards in Nuclear Power Plants
ASTM D5498	Standard Guide for Developing a Training Program for Coating Work Inspectors in Nuclear Facilities.
ASTM D6132	Standard Test Method for Nondestructive Measurement of Dry Film Thickness of Applied Organic Coatings Over Concrete Using an Ultrasonic Gage
ASTM D6237	Standard Guide for Painting Inspectors (Concrete and Masonry Substrates)

3.1.2 The Society for Protective Coatings (SSPC)

SSPC-AB1	Mineral and Slag Abrasive
SSPC-PA2	Measurement of Dry Paint Thickness with Magnetic Gages
SSPC-SP1	Solvent Cleaning

SSPC-SP6	Commercial Blast Cleaning
SSPC-SP7	Brush -Off Blast Cleaning
SSPC-SP10	Near-White Metal Blast Cleaning
SSPC-SP11	Power Tool Cleaning to Bare Metal
SSPC-SP12	Surface Preparation and Cleaning of Metals by Waterjetting Prior to Recoating
SSPC-SP13	Surface Preparation of Concrete
SSPC-Vis 1	Visual Standard for Abrasive Blast Clean Steel
SSPC-Vis 3	Visual Standard for Power and Hand Tool Cleaning

3.1.3 Occupational Safety and Health Administration (OSHA)

OSHA 29 CFR 1910	Occupational Safety and Health Standards

3.1.4 WTP Project Documents

24590-WTP-GPP-SRAD-~~0007~~ 00007 MR 12-16-03	Classification of Areas
24590-WTP-3PS-AFPS-T0004	Field Applied Special Protective Coatings for Concrete Surfaces
24590-WTP-3PS-AFPS-T0003	Field Applied Special Protective Coating for Steel items and Equipment.
24590-WTP-3PS-AFPS-T0002	Special Protective Coating Limited-Combustible Testing Protocol
24590-WTP-3PS-AFPP-T0001	Painting (Professional Line Products) 09912

3.1.5 Department of Energy (DOE)

DOE Std. 1066-97	DOE STANDARD Fire Protection Design Criteria
DOE Order 414.1A Change 1 Issued 7/12/01	Quality Assurance

3.1.6 National Fire Protection Association (NFPA)

NFPA 801 2003 Edition	Standard For Fire Protection For Facilities Handling Radioactive Materials

4 Submittals

4.1 SUBCONTRACTOR shall submit detailed written procedures for the following-

- Material receiving, marking, storage, handling
- Surface preparation
- Environmental control
- Application
- Curing
- Inspection and testing

- Touch-up/repair
- Application personnel qualification and Inspector qualification (G321-E, category 28.0)
- Proposed documentation forms. The final procedure and documentation forms shall be submitted for the CONTRACTOR's approval (G321-E category 15.0).

(The above items can be grouped into a common procedure where appropriate)

4.2 Only materials that comply with the prequalification testing requirements in Appendix B and have been accepted in advance by the CONTRACTOR shall be used. Appendix C provides the list of prequalified materials/systems. Materials that have not been successfully tested in accordance with the test requirements shall not be used. **Coating material prequalification testing is only required of the coating manufacturer and not the Special Protective Coating Application SUBCONTRACTOR.**

4.3 The SUBCONTRACTOR shall identify the specific products by manufacturer and catalog number and shall submit the coating manufacturer's latest published product data sheet application instructions and Material Safety Data (MSDS). Conflicts, if any, between the SUBCONTRACTOR's normal procedures, the coating manufacturer's recommendations, and this Specification shall be brought to the attention of the CONTRACTOR for resolution and written permission to proceed (G321- E category 11.0). The SUBCONTRACTOR shall submit original Coating Manufacturer's Product Identity Certification Records for each and every batch of coating material purchased for use on the WTP project. (Refer to Appendix F) (Refer to G321 V category 13.0)

4.4 The SUBCONTRACTOR shall complete and submit a daily inspection record as a part of the Work procedures that includes all elements provided in Appendix G as a minimum.(Refer to Section 8.1.9 and 10.2) (G321-V category 13.1)

4.5 The SUBCONTRACTOR shall submit with coating procedures a Supplier Quality Assurance Program Data Sheet (Appendix A) appropriate for the activity being performed (e.g. manufacture of SPC's or application of specified SPC's). The SUBCONTRACTOR shall identify their Quality Assurance Program (QA) Plan documents and paragraph references on the QA Program Data Sheet. All required QA Plan elements and corresponding SUBCONTRACTOR's identified documents are subject to CONTRACTOR's evaluation and verification.

4.6 The SUBCONTRACTOR shall provide a personnel training and certification plan for applicators and inspectors. (Refer to Sections, 5.1.3.2, 5.1.7, 7.1.2, 8.1.1.1 and Appendix A).

4.7 The SUBCONTRACTOR shall supply with his coating procedures a list of previous project case histories, where they applied coating materials similar to the materials specified herein. This list shall include the type of item coated, the project name, a project client contact name and phone number, if possible, for verification.

4.8 Color samples shall be submitted prior to the start of Work. Colors shall be as defined in Appendix E or as otherwise defined by the CONTRACTOR. Color samples shall be 1' x 1' in size. At least five sets of all colors shall be submitted. The type of panel used and the coating material used for the color samples shall be as agreed upon with the CONTRACTOR.

5 Quality Assurance

5.1 General

5.1.1 The SUBCONTRACTOR shall control the quality of items and services to meet the requirements of this Specification, applicable codes and standards referenced herein, and associated subcontract documents. The SUBCONTRACTOR shall prepare and maintain documentation to provide evidence of compliance with CONTRACTOR accepted procedures and this Specification. A copy of the coating inspection documentation shall be included in the shipping documentation.

5.1.2 The SUBCONTRACTOR, including any lower-tier organizations engaged by him, shall be subject to surveillance inspection by the CONTRACTOR's representative until completion or termination of the subcontract. This surveillance inspection does not relieve the SUBCONTRACTOR from the responsibility for conformance to the requirements of procurement documents, this specification and CONTRACTOR accepted procedures.

5.1.3 The SUBCONTRACTOR shall maintain a quality assurance plan for items located in "Non-Radiation and Radiation" areas, as defined in Section 2.3 that addresses as a minimum, the elements and implementing procedures called for in the Supplier Quality Assurance Program Data Sheet, Appendix A.

5.1.3.1 Quality Assurance Plan (QAP)

5.1.3.1.1 A written QAP must be developed, implemented, and maintained.

5.1.3.1.2 The QAP must describe the organizational structure, functional responsibilities, levels of authority, and interfaces for those managing, performing, and assessing the Work.

5.1.3.1.3 The QAP must describe management processes, including planning, scheduling, and resource considerations.

5.1.3.2 Personnel Training and Qualification.

5.1.3.2.1 Personnel must be trained and qualified to ensure they are capable of performing their assigned Work.

5.1.3.2.2 Personnel must be provided continuing training to ensure that job proficiency is maintained.

5.1.3.3 Quality Improvement.

5.1.3.3.1 Processes to detect and prevent quality problems must be established and implemented.

5.1.3.3.2 Items, services, and processes that do not meet established requirements must be identified, controlled, and corrected according to the importance of the problem and the Work affected.

5.1.3.3.3 Correction must include identifying the causes of problems and working to prevent recurrence.

5.1.3.3.4 Item characteristics, process implementation, and other quality-related information must be reviewed and the data analyzed to identify items, services, and processes needing improvement.

5.1.3.4 Documents and Records.

5.1.3.4.1 Documents must be prepared, reviewed, approved, issued, used, and revised to prescribe processes, specify requirements, or establish design.

5.1.3.4.2 Records must be specified, prepared, reviewed, approved, and maintained.

5.1.3.5 Work Processes.

5.1.3.5.1 Work must be performed to established technical standards and administrative controls using approved instructions, procedures, or other appropriate means.

5.1.3.5.2 Items must be identified and controlled to ensure their proper use.

5.1.3.5.3 Items must be maintained to prevent their damage, loss, or deterioration.

5.1.3.5.4 Equipment used for process monitoring or data collection must be calibrated and maintained.

5.1.3.6 Design.

5.1.3.6.1 NA

5.1.3.7 Procurement.

5.1.3.7.1 Procured items and services must meet established requirements and perform as specified.

5.1.3.7.2 Prospective suppliers must be evaluated and selected on the basis of specified criteria.

5.1.3.7.3 Processes to ensure that approved suppliers continue to provide acceptable items and services must be established and implemented.

5.1.3.8 Inspection and Acceptance Testing.

5.1.3.8.1 Inspection and testing of specified items, services, and processes must be conducted using established acceptance and performance criteria.

5.1.3.8.2 Equipment used for inspections and tests must be calibrated and maintained.

5.1.3.9 Management Assessment.

5.1.3.9.1 NA

5.1.3.10 Independent Assessment.

5.1.3.10.1 NA

5.1.4 The SUBCONTRACTOR shall provide the CONTRACTOR's representative with a Work activity schedule and shall notify the CONTRACTOR of all required inspection points prior to the scheduled date for coating activities (Refer to Section 2.1.10 and 2.1.11 herein).

5.1.5 If the SUBCONTRACTOR's proposed Work plan or procedures differ from the requirements of this Specification, the SUBCONTRACTOR shall specifically identify and explain all differences in writing, using an SDDR or other appropriate WTP project document, and submitted to the CONTRACTOR for review and approval prior to proceeding with a known deviation after the fact.

5.1.6 All pre-established witness and hold points shall be witnessed by the CONTRACTOR unless a written waiver has been issued.

5.1.7 All personnel shall receive training in the specific project coating requirements and the associated CONTRACTOR accepted work procedures that are relevant to their individual work assignments.

5.1.7.1 Painter/coating application personnel used to prepare the surface and apply coatings shall be trained, qualified and certified in accordance with the SUBCONTRACTOR's procedures accepted by the CONTRACTOR.

5.1.7.2 The SUBCONTRACTOR's coating Work inspectors shall have previous experience in coating inspection and shall receive documented training in the specific project coating requirements, ASTM standards and other relevant standards including the CONTRACTOR accepted Work procedures. All coating inspectors shall be trained, qualified and certified Level I inspectors meeting the requirements of Section 8.1.1.1. Inspector training, qualification and certification shall also comply with the SUBCONTRACTOR's document(s) identified on the submitted Supplier QA Program Data Sheet (Appendix A).

6 Materials

6.1 Coating Materials

6.1.1 All Special Protective Coating (SPC) secondary containment materials applied to concrete or steel items located in "Radiation" areas shall be prequalified in accordance with Appendix B. All SPC's applied to the building structure in "Radiation" areas or in any of the process buildings shall employ Approved coating materials as defined in Appendix B.

6.1.2 The Volatile Organic Compound (VOC) content of all materials shall comply with Federal, State and Local or other Regulatory requirements that have jurisdiction. The maximum allowable VOC for this project is 3.8 lbs./gal (450 gms/liter)

6.1.3 Coating materials including the primer intermediate and finish coat on a given item, shall all be from the same manufacturer as identified in Appendix C.

6.1.4 Secondary Containment repair materials shall be the same as those originally used or shall be those recommended by the manufacturer or shown to be compatible with the original coating and acceptable to the CONTRACTOR. Repair materials shall be in pre-measured units, and only complete kits shall be mixed. Splitting or breaking down pre-measured units of multi-component coating materials may be considered if the SUBCONTRACTOR prepares a procedure that requires accurate measurement of all materials and the SUBCONTRACTOR's QC inspector monitors/verifies each and every mix. This procedure must be submitted to the CONTRACTOR for review and permission to proceed.

6.1.5 Appendix D Room Finish Schedule Drawing References and Appendix C Tables contain the specified Special Protective Coatings for the WTP project. Appendix C contains the generic coating systems and approved coating materials. The generic coating system (primarily Epoxy or Epoxy Novolac materials) used on concrete and steel in secondary containment areas shall be coordinated with the generic coating materials indicated in the Architectural Room Finish Schedules (Appendix D Drawing Reference) for LAW, HLW, PTF, LAB and selected areas of BOF and their physical location. The Architectural Room Finish Schedules will identify coating materials for Secondary containment based on evaluation of chemical exposure , temperature and mechanical abuse based on a case by case criteria and specifically tailored for the conditions / exposure that is to be expected.

6.1.6 Appendix F is the Coating Manufacturer's Product Identity Certification Record. This document is required from the coating manufacturer for each component of each batch of coating material (manufactured coating material not individual ingredients).

6.1.7 Appendix G is an example for a Surface Preparation and Coating Inspection Form. This form or a form that contains the same information is required for daily inspection documentation.

6.1.8 Appendix H is the Manufacturer's Standard Coating Data Sheet. This is a sheet that must be completed when submitting an alternate material or coating system. A coating material technical data sheet and MSDS is required for each coating material included. All alternate materials must be reviewed and accepted by the CONTRACTOR prior to use.

6.2 Patching/Filler Materials

6.2.1 Materials used to patch or fill holes, shrinkage cracks, and defects in the concrete shall meet the following requirements:

6.2.1.1 For holes larger than 1/2" in its largest dimension, the filler may be a non-shrink structural concrete grout with a slump sufficient to fill holes on a vertical or overhead surface while staying flush with the surface plane. The concrete structural grout shall be compatible with the SPC system specified for use on the concrete surface. Compatibility shall be verified by applying the SPC over a cast sample of the structural concrete grout followed by a pull off adhesion of at least 200 psi per ASTM D4541 using test procedures applicable for type II and type IV instruments listed in Annex A.2 and A.4.

6.2.1.2 For holes up to 2" in its largest dimension, the filler may be a 100% solids proprietary polymeric filler material as recommended by the SPC manufacturer with a slump sufficient to fill holes on a vertical or overhead surface while staying flush with the surface plane. Polymeric fillers using a curing compound, catalyst or accelerator that develop heat during

the cure process shall not cause blowholes in the applied filler that requires subsequent repair. The polymeric filler may be applied in more than one application to fill large voids flush with the concrete surface plane of concrete to steel embed surface plane. The proprietary polymeric filler material shall be compatible with the SPC system specified for use on the concrete surface. Compatibility shall be verified by applying the SPC over a cast sample of the proprietary filler material followed by a pull off adhesion of at least 200 psi per ASTM D4541 using test procedures applicable for type II and type IV instruments listed in Annex A.2 and A.4.

6.2.1.2.1 Polymeric filler materials used in R5 areas where the 40 year accumulated radiation level will be greater than 2E8 rads that are not made with the same generic resin type shall be radiation tolerance tested in combination with the SPC system specified for use in that particular area. The specimens shall be prepared for testing as follows:

- Using the standard concrete test blocks identified in Appendix B, drill a hole 1/2" x 1/2" in each face of each block. Fill the hole with the proposed filler material flush with the surface plane of the block. Apply the SPC systems identified for use in the R5 areas. Perform radiation tolerance testing per Appendix B.

6.2.1.3 For stable non moving cracks fill flush with the surface plane using a 100% solids proprietary polymeric filler material recommended by the SPC manufacturer as defined in section 6.2.1.2. Large cracks shall be routed out as shown on Appendix I installation details.

6.2.1.4 For control joints that are formed or created after the concrete is placed and cured, apply the floor or wall coating down into the joint at least ½". Install a foam backer rod setting the depth of the joint at half the width. Install a bond breaking tape over the backer rod. Install a flexible polymeric sealant that is compatible with the coating system and the expected chemical exposure in that area. Refer to Appendix I for an installation detail.

6.2.1.5 For coving in corners (filler material with 2" radius) use the same rigid polymeric filler material defined in section 6.2.1.2 or a filler material as recommended by the coating manufacturer and accepted by the CONTRACTOR.

6.3 Batch Information

6.3.1 Each container of coating material received and used by the SUBCONTRACTOR shall be marked with the following:

- The manufacturer's name
- The product designation
- Batch/lot number
- Location and date of manufacture
- The shelf life expiration date

6.4 Abrasives

6.4.1 Abrasives for blast cleaning shall be clean, free of oil or contaminants, and dry. The particle size shall be capable of producing the specified surface texture or surface profile. Mineral and

slag abrasives shall meet the requirements of SSPC AB-1. The First batch/lot of non packaged abrasives shall be tested for water soluble contaminants and the conductivity shall not exceed 1,000 microsiemens/cm when tested in accordance with ASTM D4940 Section 1.0-2.0. Abrasives used at the RPP-WTP project site shall be < 1% silica.

6.4.2 When using reclaimed steel grit/shot abrasive, the particle size shall be capable of producing the specified surface texture . All reclaimed abrasives shall be tested for water-soluble contaminants and conductivity. Conductivity shall not exceed 1000 microsiemens when tested in accordance with ASTM D 4940 Section 1.0-2.0. All reclaimed abrasives shall be tested for oil and grease contamination using the water floatation test at the beginning of each shift.

6.4.3 Reclaimed grit used for abrasive cleaning shall be tested for the presence of oil by immersing a sample in clean tap water and checking for oil flotation. Tests shall be made at the start of blasting and every four (4) hours thereafter. If oil is evident, the contaminated abrasive shall be cleaned or replaced. All surfaces blasted since the last successful test shall be completely re-blasted using clean abrasive.

6.4.4 Expendable abrasive (Green Diamond / Black Beauty) shall be used on a once only basis and then discarded.

6.5 Water Quality

6.5.1 Water used for wet abrasive blasting or high pressure water jetting shall be clean tap or potable water and shall not exhibit any evidence of an oily sheen.

6.6 Coating Over Stainless Steel (SS)

6.6.1 All coating materials, thinners, solvents and cleaning materials used on SS shall be shown to have low leachable chlorides (<200ppm) and only trace amounts of low melting point metals. One of the approved coating materials listed in Appendix C/Table 1 shall be used or an equivalent submitted to the CONTRACTOR for review and approval. The submittal shall include an independent laboratory test report that verifies the above parameters, a copy of the Manufacturer's latest published data sheet and Material Safety Data Sheet (MSDS). All proposed materials shall be evaluated for possible use by the CONTRACTOR.

7 Application

7.1 General

7.1.1 It shall be the SUBCONTRACTOR's responsibility to stop the surface preparation and coating at any time when conditions exist that might adversely affect the quality. The CONTRACTOR's representative may reject any prepared or coated surfaces not in compliance with this Specification.

7.1.2 All painters and other personnel used to apply coatings on to concrete and steel items shall be individually qualified and certified in accordance with the SUBCONTRACTOR's accepted

written procedures that includes classroom training on the WTP Project Specification. Guidance for qualifying painters/application personnel are contained in ASTM D4228 and ASTM 4227 Section 1-10 and Figure #2 or other as accepted by the CONTRACTOR.

7.1.3 The secondary containment coating Mock ups shall have been satisfactorily completed and accepted by the CONTRACTOR prior to starting production work on a given area. That does not mean that all mock ups for all coating systems must be completed prior to the start of work, but at least the mock ups for the coating systems that are scheduled for facility production shall be completed prior to start of work with those coating systems.

7.2 Pre-Surface Preparation

7.2.1 Prior to mechanical cleaning, the surfaces to be coated shall be cleaned in accordance with SSPC SP1 to remove oil, grease, dirt, silicone, marks made with waxy or greasy makers, graffiti, curing compounds or form release residue or other foreign matter that could interfere with the proper bonding of the coating contamination of this type shall be removed by steam cleaning or solvent washing in accordance with ASTM D4258 Section 1.0 - 9.0. The SUBCONTRACTOR shall inspect floor for surface hardeners. Surface hardeners shall be removed prior to applying Special Protective Coatings.

7.2.2 Inspection of surfaces exhibiting fins, ridges, and sharp projections or surfaces that require repair of honeycomb areas, tie rod holes, and cavities that are greater than 1/2" in its largest dimension (i.e., length, width or depth) or cracks wider than 1/8" shall be performed by the SUBCONTRACTOR and includes a written report to the CONTRACTOR. These defects must be removed or corrected prior to applying any coating.

7.2.3 All sharp corners that are scheduled to receive Special Protective Coatings shall be rounded to a radius of no less than 1/8"

7.2.4 The SUBCONTRACTOR shall inspect all joint details and the configuration of the finished concrete sections in relation to the application of materials as shown in installation details shown in Appendix I Secondary Containment Installation Details and the requirements of this specification.

7.2.5 Any remaining sharp edges, weld spatter, or burrs, fins, ridges, tie rods, projections found after the start of coating Work shall be completely removed by grinding or other means. Pneumatic tools shall not be used unless they are fitted with effective oil and water traps on the exhaust air. If the steel embeds develop salt deposits or were shipped or stored so that the surface could have been contaminated with soluble salts (e.g., above deck ship transport, truck transport on dirt roads close to ocean, storage), the area shall be pressure water washed (e.g., 2,000-5,000 psi) with demineralized water to remove the soluble salt contamination as possible prior to abrasive blasting/water jetting.

7.2.6 Floor/Wall and Wall/Wall coving shall be installed using the same rigid filler material defined in section 6.2.1.2 or a filler material as recommended by the coating manufacturer and accepted by the CONTRACTOR. Coving shall be installed after concrete surface preparation and shall comply with the installation details in Appendix I.

7.2.7 To insure a seal and a smooth transition from concrete surfaces onto steel embed plates, the concrete shall be chipped away from the edge of the embed plate at least ½" and at least ¼" below the surface plane of the embed plate. The chipped away area shall be filled flush between the concrete and steel embed plate using the same rigid filler material defined in section 6.2.1.2 or a filler material as recommended by the coating manufacturer and accepted by the CONTRACTOR. (refer to Appendix I).

7.2.8 To provide a structurally sound termination of a floor coating, a perimeter key shall be placed in the floor (refer to Appendix I).

7.3 Surface Preparation

7.3.1 Prior to the start of Work, the SUBCONTRACTOR shall examine all surfaces to be coated to determine their acceptability for the specified coating application Work. If the surfaces are found to be unacceptable, the SUBCONTRACTOR shall either return the surface to an acceptable condition or immediately notify the CONTRACTOR in writing if the repairs are outside the scope of work. Coating Work shall not commence until corrective action has been taken. Starting Work prior to completion of corrective action shall preclude any subsequent claim by the SUBCONTRACTOR. The CONTRACTOR may require corrective action at the SUBCONTRACTOR's expense.

7.3.2 The abrasive mixture and the compressed air shall be clean, dry and oil free. Moisture traps, in addition to oil and water separators mounted on the compressor, shall be used in compressed air lines to remove oil and moisture from air close to the point of use. (refer to Section 7.3.4.4 and 8.1.6)

7.3.3 Concrete Surfaces

7.3.3.1 Floors, walls shall be free of curing compounds, laitance, dirt or other residue that could interfere with proper adhesion of the coating system. Shop or field primers applied to steel embeds that are not compatible with the intended secondary containment coating system shall be removed and primed with a compatible primer.

7.3.3.2 To achieve a clean roughened surface suitable for the specified coating systems, surfaces may be dry abrasive blasted, wet abrasive blasted (Refer to ASTM D4259 Sections 1.0-10.0) or cleaned and roughened by high pressure (10,000 psi to 25,000 psi) water jetting using a rotating head hand lance or self propelled robot (Refer to SSPC SP12 Appendix C and D for a description and operation and SSPC SP13 Sections 3.0-6.0). Small areas may be prepared using grinders or sanders as accepted for use during mock-ups. Needle guns may only be used if followed by full abrasive blasting or water jetting to remove weakened/crushed concrete surface layer to sound dense concrete and only when the procedure has been shown to result in a coating adhesion of 200 psi minimum.

7.3.3.3 In addition, floors may be acid etched using 20 % citric acid solution when accepted by the CONTRACTOR. Acid etched surfaces shall be pH tested in accordance with ASTM D4262 Sections 1.0-8.0. The pH shall be no more than 1.0 pH lower or 2.0 pH higher than the pH of the potable rinse water. A suitable texture shall be achieved that will be agreed upon during the mock up coating application. A detailed procedure on the use, clean up and

disposal of acid etching materials/rinse must be provided for review and acceptance by the CONTRACTOR.

7.3.4 Carbon Steel Surfaces

7.3.4.1 Prior to blast cleaning, items to be coated shall be visibly dry with the surface temperature of at least 5°F above the dew point. Concrete surfaces shall be determined suitably cured as defined by the CONTRACTOR.

7.3.4.2 Carbon steel surfaces to be coated shall be blast cleaned in accordance with the surface preparation requirements specified in Appendix D. Where abrasive blasting will damage the items or is impractical, SSPC-SP11 Power Tool Cleaning to Bare Metal may be substituted only in limited areas and only with CONTRACTOR's written permission to proceed.

7.3.4.3 Abrasive blasting of carbon steel shall result in an angular surface profile 1.5 to 3.0 mils as measured using a Testex Press-O-Film replication tape in accordance with ASTM D4417 method C. Concrete shall be suitably roughened and textured using one of the specified methods of surface preparation during the coating system mock-ups performed and accepted by the CONTRACTOR..

7.3.4.4 The recycled abrasive mix shall be maintained clean of contaminants by continuous effective operations of cleaning machine scalping and air wash separators. Reclaimed grit used for abrasive cleaning shall be tested for the presence of oil/grease by immersing a sample of spent abrasive in clean tap water and checking for oil flotation. Tests shall be made at the start of blasting, and at a minimum of every four (4) hours thereafter. If oil is evident, the contaminated abrasive shall be cleaned or replaced. All surfaces blasted since the last successful test shall be completely cleaned of contamination then re-blasted using clean abrasive. Blast cleaning shall not be performed in the immediate area where coating or curing of coated surfaces is in progress unless a vacuum system is employed that contains dust. All surfaces and equipment which are not to be coated shall be suitably protected from blast cleaning.

7.3.4.5 Burrs, slivers, scabs, lamination, and weld spatter fins, ridges, sharp protrusions which become visible after blasting shall be removed. The tools and manner employed to remove defects and sharp edges, shall not burnish or destroy the profile the surface. If the profile or roughness is reduced, it shall be re-blasted to produce the profile and roughness as required. The exhaust of pneumatic grinders shall not impinge on the cleaned surface. If the surface becomes contaminated, it shall be cleaned of contamination then re-blasted as required. Carbon steel tools or implements shall not be used on stainless steel surfaces.

7.3.4.6 If visible rust occurs or if the cleaned surface becomes wet or otherwise contaminated, these surfaces shall be re-cleaned to the specified standard. Cleaned surfaces remaining un-coated overnight shall be re-cleaned to the specified cleanliness prior to applying the coating. Where Concrete and Carbon Steel interface and are proposed to be coated in one operation every effort will be made to apply coating to the steel before surface deterioration.

7.3.4.7 After surface preparation is complete and before coating, pressurized air or a vacuum cleaning shall be used to remove all dust and abrasive residue. The air shall be clean and

dry as verified in accordance with Section 8.1.6 so as not to contaminate the prepared surface. The operator shall ensure that all dust and abrasive residues are removed from the surface of blast profiles when vacuum cleaning is carried out.

7.3.4.8 Machined surfaces shall be protected from damage due to blasting and coating operations.

7.3.4.9 Equipment shall have all openings plugged, masked, and/or blinded sufficiently to protect internals before abrasive blasting. After the coating operation is complete all internals shall be blown clean and/or vacuumed to remove any dust or abrasive blast media that may have entered the coated equipment.

7.3.5 The abrasive mixture and the compressed air shall be clean, dry and oil free. Moisture Traps, in addition to oil and water extractor mounted on the compressor, shall be used in compressed air lines to remove oil and moisture from air close to the point of use. (refer to Section 7.3.4.4 and 8.1.6)

7.3.6 Where galvanized steel falls into secondary containment areas and requires a coating, the surface shall be cleaned per SSPC SP1 and allowed to dry. The galvanizing shall then be pretreated using a phosphoric acid solution (e.g., Amchem Galva-Prep) or brush blasted per SP7 as recommended by the manufacturer of the coating material intended for use. After flushing the acid off using potable water, the surface area contacted by the acid and the rinse water shall be tested for pH. The pH shall be as indicated in specification section 7.3.3.3.

7.3.7 Damaged galvanized steel shall be cleaned per SSPC SP11 using a 3M Clean-N-Strip disc and wheel, a flapper wheel with a 60-80 grit size or a slow variable speed sander using 60-80 grit sanding disc. All galvanizing to be coated shall be pretreated as indicated in specification section 7.3.6.

7.4 Coating Application

7.4.1 Prior to applying Special Protective Coatings (SPC's) the concrete surface shall be dry as determined by the plastic sheet method in accordance with ASTM D4263 sections 1.0-8.0.

7.4.2 Coatings shall be applied in accordance with CONTRACTOR accepted procedures (refer to Section 4.1). The coating manufacturer's recommendations for the application temperature and curing temperatures versus times (between coats and after last coat) of the specified material shall be considered when determining minimum and maximum cure to recoat time intervals. Application and curing temperatures above or below the limits allowed by this specification (Refer to Section 7.4.5) shall be submitted to the CONTRACTOR for review and permission to proceed.

7.4.3 Coatings shall be applied using properly sized and type of equipment for the size and complexity of the item being coated. The equipment shall be clean with all components in good working order.

7.4.4 Bug holes, cracks and control joints shall be filled flush with the concrete surface plane or as identified in Appendix I Secondary Containment Installation Details using a structural concrete grout, Five Star V/O or Five Star Vertical patch or CONTRACTOR accepted alternate structural concrete grout or polymeric filler. Structural Concrete grout shall be

applied prior to applying the first coat or by applying the proprietary polymeric filler listed in Appendix C Table 2 for the selected coating system or CONTRACTOR accepted equal. Proprietary filler materials may be applied before or after the primer sealer coat where acceptable to the specific coating manufacturer. The filler technique shall be developed during the mock up to minimize the occurrence of pinholes in the finish coats.

7.4.5 Coatings shall be applied only when the surfaces to be coated are clean and dry. The substrate temperature shall be a minimum of 5°F above the dew point during coating application and until the applied coating is no longer moisture sensitive per the coating manufacturer's published data or written recommendations. The substrate temperature during coating application and curing shall be a minimum of 50°F and a maximum of 110°F. The relative humidity during coating application shall not exceed 85 percent. Measure humidity in accordance with ASTM E 337 Sections 1.0-19.0.

7.4.6 The SUBCONTRACTOR shall record all batch numbers for each coating component used along with other information necessary for the CONTRACTOR to relate the batch to the area or item for which it was applied. (Refer to Appendix G)

7.4.7 All coatings shall be thoroughly mixed until they are smooth and free from lumps, then strained through a screen of at least 30 mesh. Heavy bodied materials that will not flow through a 30-mesh screen are exempt from straining. All coatings that could settle in the container during application must be kept under continuous mechanical agitation to ensure coatings expend their solid contents and do not settle during application.

7.4.8 Alternating coats shall have a visible color difference to insure full coverage over previous coats.

7.4.9 Dry film thickness of each coating shall be in accordance with Appendix C Table 2 Secondary Containment Prequalified Coating Materials or as specified in the subcontract document. (Refer to Section 8.3.6)

7.4.10 The minimum and maximum drying times between coats shall be in strict accordance with the coating manufacturer's latest published technical data sheets or written recommendations.

7.4.11 Runs, sags, voids, drips, overspray, loss of adhesion, bubbling, peeling, pinholes or inadequate cure are not permitted and shall be corrected using CONTRACTOR accepted repair procedures.

7.4.12 Application equipment that will be reused such as spray equipment, brushes and rollers shall be cleaned using the coating manufacturer's recommended solvents/cleaners.

7.5 Remedial Work

7.5.1 The completed coating on each item shall have the correct dry film thickness and shall be free of damage and visible defects.

7.5.2 Repair of Dry Film Thickness (DFT) deficiencies

7.5.2.1 Defects such as runs, sags, overspray and embedded particles shall be corrected by sanding to remove the defect. When the defects are in the finish coat, all areas sanded must be overcoated with the finish coat. If the DFT of primer or intermediate coat is reduced to less than the specified minimum, the area shall be abraded with 60-80 grit sand paper or flapper wheel and an additional layer of coating shall be applied until sufficient thickness is achieved. If noticed during application, the sags or runs may be brushed out.

7.5.3 Repair of Damage

7.5.3.1 All damaged and loosely adhering coating shall be removed and the surface thoroughly cleaned using a vacu-blaster or high pressure water jetting, 60-80 grit sanding disc, 60 - 80 grit sandpaper, 60-80 grit flapper wheel or 3M Clean-N-Strip. Edges of the breaks shall be feathered to insure a smooth transition and the designated number of prime and finish coats shall be applied. Care shall be taken to insure adjacent coatings are not heat damaged, polished or burnished.

7.5.4 Loss of adhesion, delamination, blisters, bubbling and fish eyes in the applied coating requires the coating to be removed and reapplied in accordance with this Specification.

7.5.5 Pinholes shall be filled or otherwise repaired prior to the application of the final coat. Pinhole repairs in the final coat shall blend in and not be visually obvious.

8 Inspection

8.1 General

8.1.1 The SUBCONTRACTOR shall have the full responsibility for the coating application quality in accordance with this Specification and shall be responsible for stopping Work activities when conditions develop that could adversely affect the quality. All Work is subject to the CONTRACTOR's inspection surveillance.

8.1.1.1 All coating Work inspection personnel shall be trained, qualified and certified in accordance with the SUBCONTRACTOR's accepted procedures. The inspectors shall meet or exceed the minimum requirements for a Level I coatings inspector as described in ASTM D4537 Section 6.0. At least one inspector shall meet the minimum requirements for a Level II inspector as described in ASTM D4537 Section 1.0-8.0. The SUBCONTRACTOR shall conduct an examination, a performance evaluation and issue a certification for each inspector in accordance with ASTM D4537 Section 9.0. The Level II inspector shall supervise the Work of all Level I's. The SUBCONTRACTOR's inspector must demonstrate his/her capability of using the inspection equipment and performing all the required inspections. The SUBCONTRACTOR's inspector training, qualification and certification plan and associated procedures shall satisfy the requirements of ASTM D4537, Sections 1.0-8.0 using the guidelines provided in ASTM D5498 including classroom training on the WTP specifications applicable to coating inspection. Additional coating work inspection guidance is found in ASTM D6237 and ASTM D3276 which shall be used in developing procedures for training and certifying coating work inspectors.

8.1.2 The CONTRACTOR's representative shall be the final authority on the specification compliance for surface preparation and material application. Any coating which, in the judgment of the CONTRACTOR's representative has not been applied in conformance with this Specification, shall be rejected.

8.1.3 The CONTRACTOR representative shall have access to each part of the process and shall have the right and opportunity to witness any of the Quality Control Tests.

8.1.4 The SUBCONTRACTOR shall furnish the necessary testing and inspection instruments, properly calibrated and certificates maintained. If equipment is suspected of being out of calibration, it shall be re-calibrated and certificates made available for verification by the CONTRACTOR. Such equipment shall be available for use by the CONTRACTOR in conducting surveillance of the Work.

8.1.5 The SUBCONTRACTOR shall halt the coating Work and make corrections to the procedures, as necessary to correct repetitive faults found in the Work.

8.1.6 Prior to using compressed air, the quality of the air downstream of the separator shall be tested in accordance with the requirements of ASTM D4285 by blowing the air onto a clean white blotter or cloth for two (2) minutes at a distance of no more than twelve (12) inches to check for any contamination, oil, or moisture. This test shall be performed at the beginning of each shift and at not more than four (4) hour intervals. The test shall also be made after any interruption of the air compressor operation or as required by the CONTRACTOR. The air shall be used only if the test indicates no visible contamination, oil, or moisture. If contaminants are evident, the equipment deficiencies shall be corrected and the air stream shall be re-tested. Moisture separators shall be bled continuously. All lines shall be tested individually prior to use. Surfaces determined to have been blown down or blasted with contaminated air shall be cleaned of all contamination then re-blasted with clean air and abrasive. Coatings determined to have been applied using contaminated air shall be removed and reapplied using clean air.

8.1.7 Inspection points shall be established as follows:

- Prior to the start of Work
- Immediately following the surface preparation
- Immediately prior to the coating application
- Following the application of each coat
- Following the curing of the coating
- Final inspection and sign-off, in accordance with the project requirements

8.1.8 Any defects disclosed by inspection shall be re-inspected after correction.

8.1.9 The SUBCONTRACTOR shall keep the records indicated below, and submit these records to the CONTRACTOR (refer to Section 4.4 and Appendix G). The following lists the frequencies:

Coating/Inspection Step	Required Frequency
1. Pre-Surface Prep and Surface Preparation/Profile/Texture	100% visual on Pre-Surface/100% on Surface Prep Cleanliness/Steel profile first item of each type per shift and

		every 20 items thereafter/Concrete 100% visual for cleanliness and texture.
2.	Environmental/Air Quality	At the start of each shift and every 4 hours thereafter or more often during changing conditions.
3.	Recirculated Abrasive	At the start of work and as required with a minimum of every 4 hours thereafter
4.	Thickness	SSPC-PA2- 5 spot readings per 100 sq.ft. on large surfaces or steel items; surfaces or steel items < 100 sq.ft. 4 spot readings on each separate surface and 2 spot reading on steel items less than 4 inches. (e.g., valves, fittings, components, etc.)
5.	Visual on Applied Coating	100% of all items

8.2 Surface Preparation Inspection

8.2.1 Verify bug holes , voids ,cracks and control joints are properly filled. This is not necessary if filler is applied after surface preparation and sealer coat application.

8.2.2 Verify environmental conditions and compressed air quality (refer to Section 7.3.5, 7.3.4.1, 8.3.1)

8.2.3 Verify recycled abrasive is grease and oil free (refer to Section 7.3.5).

8.2.4 Verify surface cleanliness and texture.(refer to Sections 7.3.3.2, 7.3.4.2. 7.3.4.3 and 8.1.9).

8.2.5 Grease free chalk shall be used to mark local areas which do not meet the specified requirements (e.g., soapstone and crayons are not acceptable).

8.3 Coating Application

8.3.1 Environmental conditions and compressed air quality shall be verified per Sections 7.4.5 and 8.1.9.

8.3.2 Dry coating thickness (DFT) on steel items shall be measured with a magnetic film thickness gage such as an Elektro-Physik "Mikrotest" or Positector 2000, 6000 or CONTRACTOR accepted equal in accordance with SSPC PA2. Steel items and individual items on equipment less than one hundred (100) sq.ft. in surface area shall have at least four (4) evenly spaced spot readings per item. Equipment or equipment components less than four (4) inches in its largest dimension only require two (2) evenly spaced spot reading per item.

8.3.3 Dry coating thickness (DFT) on concrete shall be measured using a Wet Film Thickness (WFT) gage (Refer to ASTM D4414 Sections 1.0-10.0 applicable to procedure A) and calculating thickness based on coating material volume solids (added thinners required recalculation of volume solids) or by using a nondestructive ultrasonic tester such as the Positector 100 or accepted equivalent (Refer to ASTM D6132 Sections 1.0-11.0). Each 100 sq.ft. shall receive 5 evenly spaced gage readings. Areas less than 100 sq.ft. in surface area shall have at least 2 evenly spaced spot readings per area.

8.3.4 Wet film thickness gages shall be of high quality steel or stainless steel, with a maximum blade width of 1.5", that can be purchased with calibration certifications. Wet film thickness

gages shall be visually inspected for paint residue and physical damage at the start of each shift and every 4 hours thereafter during use.

8.3.5 The Dry Film Thickness gage shall have a minimum of a zero to 40 mil or zero to 60 mil working range and shall be checked for calibration accuracy in accordance with SSPC-PA2 at the start of each shift against certified coating thickness calibration standards for non-magnetic coating of steel traceable to NIST or CONTRACTOR's accepted alternative standards. The calibration standards shall be in the 1.5 mil to 40.0 mil range, unless otherwise specified. Any surface with a measured thickness outside of the limits described in section 7.4.9 shall be rejected. These areas shall be reworked or re-cleaned and re-coated at the SUBCONTRACTOR's expense prior to acceptance by the CONTRACTOR.

8.3.6 When dry film thickness becomes debatable or indeterminate, the CONTRACTOR reserves the right to require the use of destructive testing using a Tooke gage in accordance with ASTM D4138 Sections 1.0-9.0 or by nondestructive ultrasonic testing in accordance with ASTM D6132 Sections 1.0-11.0 to verify dry film thickness. All areas damaged by destructive testing shall be repaired by the SUBCONTRACTOR.

8.3.7 Runs, sags, voids, drips, overspray, loss of adhesion, bubbling, pinholes, peeling, or inadequate cure are not permitted and shall be repaired or reworked.

9 Storage, Handling and Shipping

9.1 Coating Materials

9.1.1 Coating materials shall not be stored in direct sunlight or exposed to inclement weather (e.g., rain, snow, sleet, freezing rain, dew point condensation, see also section 9.1.5). Materials shall remain under cover until ready to use.

9.1.2 Coatings, thinners, cleaning solvents and other flammable materials stored at any location, shall be kept away from combustion sources and shall be stored in metal flammable material storage cabinets meeting NFPA and OSHA standards. Thinners and solvents shall be transported to the point of use in approved safety containers meeting OSHA standards.

9.1.3 Coating material shall be delivered in manufacturer's original unopened containers. Each container shall be clearly identified with the manufacturer's name, product designation, batch number, date of manufacture and shelf life expiration date.

9.1.4 Coating materials must have a minimum of 80% of its shelf life remaining at the time of shipment to the project site or SUBCONTRACTOR's warehouse. Items with a normal shelf life less than 12 months shall have a minimum of 85% of its shelf life remaining at the time of shipment to the project site or SUBCONTRACTOR's warehouse.

9.1.5 Coating materials that are older than twenty four (24) months from the date of manufacture or that exceed the manufacturer's shelf life, if less than twenty four (24) months, shall not be used and shall be placed on HOLD and segregated from other coating materials. Where the coating material has exceeded its shelf life and can be shown to have been stored as specified herein, a one-time extension for no less than three (3) months and no more than six (6) months

may be issued by the coating manufacturer. The shelf life extension shall be based on laboratory testing of retain samples taken at the time of manufacture or by testing a sample of the actual coating material in question. Where testing verified an outdated coating material still complies with its original design criteria, it is acceptable for shelf life extension. Expiration date stickers, provided by the coating manufacturer, shall be affixed to each container prior to release from HOLD. The stickers shall include the product number, batch/lot number, the new expiration date and suitably marked to indicate that they came from the coating manufacturer. A new Appendix F shall be provided by the coating manufacturer that includes the test results and specifically indicate that the new Appendix F was provided to document shelf life extension including new expiration date. Coating materials that have not been stored or handled in accordance with sections 9.1.5, 9.1.6, 9.1.7 and 9.1.8, may not have their shelf life extended.

9.1.6 Coating material shall be protected from moisture, direct sunlight and temperatures below 40°F or above 100°F unless otherwise allowed by the coating manufacturer's latest published instructions and accepted by the CONTRACTOR.

9.1.7 Coating material containers where the airtight seal has been broken or any of the contents are lost, shall not be used.

9.1.8 Coating material containers shall not be opened except for immediate use.

9.1.9 Unused material shall be returned to storage as soon as possible at the end of each Workday. Materials left out for more than ten (10) hours in an uncontrolled storage area (areas without environmental controls or environmental monitoring that are exposed to ambient weather) shall not be used and shall be placed in a segregated hold area until final disposition then removed from the job site if rejected. No water borne coatings shall be stored in areas where the temperatures are below 40°F.

9.1.10 All required coating material certifications for each batch of material delivered to the job site shall be available at the time of material receipt. Materials delivered to the shop or field without the required documentation shall not be used and the SUBCONTRACTOR shall tag and place discrepant materials into a hold area clearly separated from acceptable material. Once the required documentation is received or otherwise corrected and found to be acceptable, the discrepant material may then be taken off hold status and used.

10 Documentation

10.1 The SUBCONTRACTOR shall provide a record of all materials used (Regarding individual batch numbers, refer to Appendix F).

10.2 The SUBCONTRACTOR shall provide a record of all required daily inspections (Example-Appendix G) that includes pre-surface preparation, compressed air cleanliness, environmental conditions, surface preparation and roughness, location of field repairs coated, application, visual inspection, dry film thickness, and all touch up/repair. This record shall include the coating and thinner materials used and the ID of the items coated to provide traceability.

10.3 All quality documentation shall be available for review by the CONTRACTOR representative within twenty four (24) hours from the time it is generated.

10.4 SUBCONTRACTOR documentation forms or the way that the actual Work will be documented shall be provided by the SUBCONTRACTOR as part of the procedures submittal for review by the CONTRACTOR.

11 Design Changes Incorporated by Reference

11.1 The following is a listing of design changes that are identified by reference and do not require modification to the specification.

Design Change Document
(none at this time)

* Denotes a new entry for this revision of the specification.

Appendix A
Supplier Quality Assurance Program Requirements Data Sheet

DOE ORDER 414.1A REQUIREMENTS

The following marked QA Program Elements of DOE ORDER 414.1A apply and are subject to CONTRACTOR evaluation and verification (see also exhibit J in subcontract documents)

DOE O 414.1A	N/A	PROGRAM ELEMENTS	SUPPLIER DOCUMENT AND PARAGRAPH REFERENCES TO BE COMPLETED BY THE SUPPLIER
X	☐	PROGRAM	
X	☐	PERSONNEL TRAINING & QUALIFICATION	
X	☐	QUALITY IMPROVEMENT	
X	☐	DOCUMENTS & RECORDS	
X	☐	WORK PROCESSES	
☐	X	DESIGN	Coating manufacturers and coating applicators "Design" for Special Protective Coatings provided by 24590-WTP-3PS-AFPS-T0006
X	☐	PROCUREMENT	
X	☐	INSPECTION & ACCEPTANCE TESTING	
☐	X	MANAGEMENT ASSESSMENT	
☐	X	INDEPENDENT ASSESSMENT	

SIGNATURE OF SUPPLIER REPRESENTATIVE _____

0		Issue for Use				
REV.	DATE	REASON FOR REVISION	BY	CHECKED	APPROVED	QA

Special Protective Coatings For Secondary Containment Areas.	JOB NO. 24590-101
	DATA SHEET NO.
	REV. 0

Appendix B
WTP Project Special Protective Coating (SPC) Material Prequalification Requirements for Secondary Containment.

1.0 Prequalification Testing for Radiation Areas

1.1 All the coating material prequalification testing shall be performed by the coating manufacturers listed in Appendix C. Coating systems listed as "Prequalified" have been fully tested and all data has been reviewed and accepted. Only those systems listed as Prequalified may be used.

1.2 Coating systems that will be applied on items that will be located inside "Radiation" areas shall satisfy the following test requirements:

1.2.1 Radiation Tolerance Testing: Coating systems shall be tested for tolerance to radiation exposure as a complete system in accordance with the requirements of ASTM D4082 and as follows:

1.2.1.1 For coating systems to be used in areas where the total anticipated accumulate dose will not exceed 2E8 rads, no radiation tolerance testing is required.

1.2.1.2 For coating systems to be used in areas where the total anticipated accumulated dose is >2E8 rads up to 1E9 rads, test the coatings at 1E9 rads.

1.2.1.3 For coating systems to be used in areas where the total anticipated accumulated dose is >1E9 rads, the test radiation level shall equal or exceed the highest anticipated accumulated dose.

1.2.1.4 The acceptance criteria for the irradiation test shall be "no defects" as described in ASTM D4082. In addition to the defects stated in ASTM D4082, also check the coating on the test specimens for softening. The coating shall not soften because of the irradiation exposure.

1.2.2 Decontamination Testing: Generic Special Protective Coating materials such as two component or three component Epoxy, and Epoxy Novolac's, type have historically shown very good decontamination and chemical resistance properties and are suitable for use on the WTP project. Other generic coating materials located in areas that will require operational decontamination must be able to withstand the decontamination chemicals and temperatures that will be used as part of the decontamination process.

1.2.3 Abrasion Resistance Testing: In addition to radiation tolerance testing of coating systems that will be applied to surfaces inside "Radiation" areas or on items that will be located inside "Radiation" areas, those coating systems and

selected "Non-Radiation" area coating systems shall satisfy the following test requirements:

1.2.3.1 Coating systems for use -in secondary containment areas, where abrasion will be a factor in the in-service performance of the coating system, shall be tested in accordance with ASTM D4060. The weight loss shall not exceed 175 mg per 1000 cycles when a CS-17 wheel is used with a 1000-g load.

1.2.4 Adhesion Testing: Coating systems shall be tested for adhesion in accordance with the requirements of ASTM D4541 and ASTM D5144 Section 5.5.1. The minimum adhesion value shall be 200 psi for coatings applied to concrete or steel substrates.

1.2.5 Chemical Resistance Testing: Perform chemical resistance testing on coating systems in chemical exposure areas in accordance with the requirements of ASTM D3912 Section 6.3. The test reagents and test duration of the tests shall be governed by the anticipated service conditions. The test shall last for 5 days for secondary containment coating systems and for coating systems where cleanup of spills will not be immediate, for 24 hours.

If the test duration exceeds 24 hours, examine the test specimens after each 24-hour period and report the condition of the specimens after each 24-hour interval. Examine and report the condition of the specimens in accordance with the requirements of ASTM D3912, Sections 7 and 8. The test reagents and concentrations shall be as follows:

1.2.5.1 Chemical Reagents and Concentrations that may require testing

- 2.0, 5.0 & 12.2 Molar HNO3
- 0.25, 2.0, 5 & 19 Molar NaOH
- 3.27 Molar Sr(NO3)2
- 7.4 Molar NaNO2
- 4.4 Molar NaMnO4

1.2.6 Test Specimen Preparation: Test specimens shall be prepared in accordance with the requirements of ASTM D5139. The surface preparation methods utilized for radiation tolerance, adhesion and chemical resistance testing shall be representative of those proposed for use. If more than one surface preparation method is proposed for use, each proposed surface preparation method shall be tested independently. The size of the test specimens shall be appropriate for the test being carried out. The minimum size of test specimens shall be 2" X 4" X ¼" for steel substrates and 2" X 2" X 4" for concrete substrates.

1.2.7 Infra Red (IR) Scan: The coating manufacturer shall run an IR scan of the prequalification batch of the liquid component of each coating system to maintain as a record of that formulation. The IR scans shall be maintained indefinitely for all coating systems that are accepted for use by RPP/WTP and

shall be identified and submitted with the test documentation for each coating system. Thereafter, the manufacturer shall certify that each subsequent batch of an accepted coating system was manufactured with the same formulation, raw materials, production methods, and quality control standards as the coating materials originally tested and accepted for use by the RPP/WTP (refer to the statement included on the Coating Manufacturer's Product Identity Certification Record in Appendix F).

1.2.8 Flame Spread and Smoke Developed: All Special Protective Coatings that will be applied on the building structures for secondary containment located in the LAW, HLW, PTF, LAB and areas of BOF that transport, process or store radioactive materials or items shall comply with the requirements of NFPA 801 and DOE Standard 1066 as defined in specification 24590-WTP-3PS-AFPS-T0002 Special Protective Coatings Limited-Combustible Testing Protocol. The Maximum allowable flame spread is 25 and the maximum allowable smoke developed is 50. Equipment, piping, steel items installed in the building is exempt from this flame spread requirement.

1.2.9 Volatile Organic Compounds (VOC): The VOC content of all Special Protective Coatings shall not exceed 3.8 lbs./gal (450 grams/liter). If the VOC requirement in the location where the coating is being applied is less than the 3.8 lbs./gal, the local (e.g., a facility offsite in Tri-Cities area) requirements take precedence and must be met.

2.0 Prequalification Testing for Non-Radiation Areas

Special Protective Coating materials or systems that will be applied on items that will be located in "Non-Radiation" areas have the same prequalification requirements as listed in Appendix "B" Section 1.0 except no radiation tolerance testing is required.

Appendix C
Table 1- Secondary Containment Coating Systems

Usage Type	Thickness Groups Concrete/ Steel	Resin Type/ Surface Type	Coating System Description	Prequalified Coating Systems						
				Ameron	Carboline	ICI-Devoe	Dudick	Inter-National	Sherwin Williams	Remarks
FLOOR COATING SYSTEMS										
SC	T4	ECF	Heavy Spray or Self Leveling Epoxy Floor Coatings (Epoxy primer and one coat of epoxy finish)	AM07	CA07	DE07	DD07	IN07	SW07	
SC	T4	NCF	Heavy Spray or Self Leveling Epoxy Novolac Floor Coatings (Epoxy Novolac primer and one coat of epoxy Novolac finish)	AM08	CA08	DE08	DD08	(none)	SW08	
WALL and SUMP COATING SYSTEMS										
SC	T2	ECW	Epoxy Wall & Sump Coatings (Fill bug holes flush, apply 1 coat of epoxy primer and two coats of epoxy finish)	AM15	CA15	(none)	(none)	IN15	SW15	
SC	T2	NCW	Epoxy Novolac Wall & Sump Coatings (Fill bug holes flush, apply 1 coat of epoxy Novolac primer and two coats of epoxy Novolac finish)	AM16	CA16	(none)	(none)	IN16	SW16	
STEEL EMBED COATING SYSTEMS										
SC	T4	ESE	Epoxy Coatings for Embed Plates and Support Steel, (Touch up existing shop coating or abrasive blast and apply two coats of Epoxy Finish)	AM19	CA19	(none)	(none)	IN19	SW19	
SC	T5	NSE	Epoxy Novolac Coatings for, Embed Plates and Support Steel (Touch up existing shop coating or abrasive blast and then apply two coats of Epoxy Novolac Finish)	AM20	CA20	(none)	(none)	IN20	SW20	

SC = Secondary Containment

ECF = Epoxy Concrete Floors; NCF = Epoxy Novolac Concrete Floors; ECW = Epoxy Concrete Walls; NCW = Epoxy Novolac Concrete Walls

ESE = Epoxy Steel Embeds; NSE = Epoxy Novolac Steel Embeds

Appendix C
Table 2 Secondary Containment Prequalified Coating Materials

WTP Concrete System Code	Surface Type	Appendix C Table 1 Mfg. System Code	Coating Mfg.	Concrete Filler (flush)	Mfg. Products	Required Dry Film Thickness (Mils) **
SC-T4-ECF	Concrete Floors	AM07	Ameron	None	X00701 / Nu Klad 120A	1-2 / 40-60 = 41-62 mils
SC-T4-ECF	Concrete Floors	CA07	Carboline	None	Semstone 5401 / Semstone 140SL+SAND / 140SL	4-6 / 10-15 / 30-50 =44-71 mils
SC-T4-ECF	Concrete Floors	DE07	Devoe	Futura- Bond 320 Gel	Pre Prime 167/ Devmat 111	1-2 / 40-60 = 41-62 mils
SC-T4-ECF	Concrete Floors	DU07	Dudick	None	Primer 67 / Polymer Alloy 2500 FR	4-6 / 40-60 = 44-66 mils
SC-T4-ECF	Concrete Floors	IN07	International	Intercryl 320	Interseal 670HS / Interzone 954	2-4 / 45-55 = 47-59 mils
SC-T4-ECF	Concrete Floors	SW07	Sherwin Williams	Kem Cati-Cote HS or Steel-Seam FT910	Macropoxy 920 / Cor-Cote HP SL Mortar	1.5-2 / 38.5-58 = 40-60 mils
SC-T4-NCF	Concrete Floors	AM08	Ameron	None	X00701 / Nu Klad 120A / Amercoat 91	1-2 / 34-50 / 6-10 = 41-62 mils
SC-T4-NCF	Concrete Floors	CA08	Carboline	None	Semstone 5401 / 145SL+SAND / 145SL.	4-6 / 40-60 = 44-66 mils
SC-T4-NCF	Concrete Floors	DE08	Devoe	Futura- Bond 320 Gel	Pre Prime 167/ Devmat 111	1-1.5 / 40-60 = 41-61.5 mils
SC-T4-NCF	Concrete Floors	DU08	Dudick	None	Primer 67 / Polymer Alloy 2100 FR	4-6 / 40-60 = 44-66 mils
SC-T4-NCF	Concrete Floors	SW08	Sherwin Williams	Kem Cati-Cote HS or Steel-Seam FT910	Cor Cote HCR / Cor Cote HCR SL Mortar.	4-6 / 36-54 = 40-60 mils
SC-T2-ECW	Concrete Walls	AM15	Ameron	Nuclad 114A	Amerlock 400 / Amerlock 400	4-8 / 4-8=8-16 mils
SC-T2-ECW	Concrete Walls	CA15	Carboline	Semstone 195	Carbogard 1340 / Carbog890C705 / C890S800	1-2 / 4-5 / 4-5=10-14 mils
SC-T2-ECW	Concrete Walls	IN15	International	Intercyrl 320	Intergard 345 / 345 / 345	4-6 / 4-6 / 4-6=12-18 mils

WTP Concrete System Code	Surface Type	Appendix C Table 1 Mfg. System Code	Coating Mfg.	Concrete Filler (flush)	Mfg. Products	Required Dry Film Thickness (Mils) **
SC-T2-ECW	Concrete Walls	SW15	Sherwin Williams	Kem Cati-Cote HS or Steel-Seam FT910	Macropoxy 920 / Macropoxy 646 / Macropoxy 646	1-2 / 3-7 / 4 -7=8-16 mils
SC-T2-NCW	Concrete Walls	AM16	Ameron	Nu Klad 114A	Amercoat 91 / Amercoat 91	4-8 / 4-8=8-16 mils
SC-T2-NCW	Concrete Walls	CA16	Carboline	Semstone 195	Carbogard 1340 / Phenoline1205FR0700 / 1205FRS800	1-2 / 5-6 / 5-6=12-16 mils
SC-T2-NCW	Concrete Walls	IN16	International	Intercyrl 320	Intertherm 228 / 228 / 228	2-4 / 4-6 / 4-6=10-16 mils
SC-T2-NCW	Concrete Walls	SW16	Sherwin Williams	Kem Cati-Cote HS or Steel-Seam FT910	Macropoxy 920 / Phenicon HS / Phenicon HS /	1.5-2.0 / 3-7 / 4-7=8.5-16 mils

WTP Concrete System Code	Surface Type	Appendix C Mfg. System Code	Coating Mfg.	Steel Primer	Mfg. Products	Required Dry Film Thickness (Mils) **
SC-T4-ESE	Steel Embeds	CA19	Carboline	*Carbozinc 859	Carbogard 890 / 890	3-5 / 4-6 / 4-6 = 11-17 mils
SC-T4-ESE	Steel Embeds	IN19	International	*Interzinc 52	Intergard 475HS / 475HS	3-5 / 4-6 / 4-6 = 11-17 mils
SC-T4-ESE	Steel Embeds	SW19	Sherwin Williams	*Zinc Clad IV	Macropoxy 646 / 646	3-5 / 4-6 / 4-6 = 11-17 mils
SC-T4-ESE*	Steel Embeds	AM19	Ameron	*Amercoat 68HS	Amerlock 385 / 385	3-5 / 4-6 / 4-6 = 11-17 mils
SC-T5-NSE	Steel Embeds	AM20	Ameron	* Amercoat 68 HS	Amercoat 91 / 91	3-5 / 6-12 / 6-12 = 15-29 mils
SC-T5-NSE	Steel Embeds	CA20	Carboline	*Carbozinc 859	Phenoline1205 / 1205	3-5 / 5-6 / 5-6 =13-17 mils
SC-T5-NSE	Steel Embeds	IN20	International	*Interzinc 52	Intertherm 228 / 228	3-5 / 4-6 / 4-6 = 13-17 mils
SC-T5-NSE	Steel Embeds	SW20	Sherwin Williams	*Zinc Clad IV	Phenicon HS / Phenicon HS	3-5 / 6-8 / 6-8 = 16-21 mils***

NOTES TO APPENDIX C Table 2

* Note 1- This is a steel coating system shown on the room finish schedule for steel embedded in concrete and structural steel that requires the listed touch up primer and finish coating for chemical resistance. The steel coating system shall be from the same coating manufacturer as the concrete coating system.

** Note 2- The dry film thickness limitations listed in this column are based on testing to the NFPA 801-2003 and DOE STD 1066 flame spread and smoke developed requirements. The listed dry film thicknesses are the maximum allowed for wall coatings. The maximum total film thickness listed in this column includes the residual filler. Differences in dry film thickness from one coating manufacturer's system to another is due to NFPA 801 and DOE STD 1066 flame and smoke independent laboratory testing results.

*** Note 3- Using system SC-T5-NSE (SW20) from Sherwin Williams as an example, the required dry film thickness is determined by reading from left to right, the first coat is Zinc Clad IV applied at 3-5 mils, the slash separates the second coat which is Phenicon HS applied at 6-8 mils, the slash separates the third coat which Phenicon HS applied at 6-8 mils. An additional slash would define a fourth coat and so on. The total dry film thickness is listed after the equal sign.

Appendix D
Room Finish Schedule Drawing References

The tables below list the drawing numbers for the Architectural index and the Architectural Room Finish Schedules for each process facility. The latest issued revision of these drawings shall be used.

LAW DRAWING NO.	EL.	LAW DRAWING TITLE
24590-LAW-A0-A10T-00100001	--	LAW Vitrification Building Architectural Drawing Index
24590-LAW-A5-A19T-05200001	(-)21'	LAW Vitrification Building Architectural Room Finish Schedule EL (-)21'-0"
24590-LAW-A5-A19T-05200002	(-)21'	LAW Vitrification Building Architectural Room Finish Schedule EL (-)21'0"
24590-LAW-A5-A19T-05201001	0' & 3'	LAW Vitrification Building Architectural Room Finish Schedule EL 0'-0" & 3'-0"
24590-LAW-A5-A19T-05201002	3'	LAW Vitrification Building Architectural Room Finish Schedule EL 0'-0" & 3'-0"
24590-LAW-A5-A19T-05202001	15' & 22'	LAW Vitrification Building Architectural Room Finish Schedule EL 15'-0" & 22'-0"
24590-LAW-A5-A19T-05203001	28'	LAW Vitrification Building Architectural Room Finish Schedule EL 28'-0"
24590-LAW-A5-A19T-05204001	48'	LAW Vitrification Building Architectural Room Finish Schedule EL 48'-0"
24590-LAW-A5-A19T-05205001	68'	LAW Vitrification Building Architectural Room Finish Schedule EL 68'-0"

HLW DRAWING NO.	EL.	HLW DRAWING TITLE
24590-HLW-A0-A10T-00100001	--	HLW Vitrification Building Architectural Drawing Index
24590-HLW-A5-A19T-05200001	(-)21'	HLW Vitrification Building Architectural Room Finish Schedule EL (-)21'-0"
24590-HLW-A5-A19T-05200002	(-)21'	HLW Vitrification Building Architectural Room Finish Schedule EL (-)21'0"
24590-HLW-A5-A19T-05201001	0'	HLW Vitrification Building Architectural Room Finish Schedule EL 0'-0"
24590-HLW-A5-A19T-05201002	0'	HLW Vitrification Building Architectural Room Finish Schedule EL 0'-0"
24590-HLW-A5-A19T-05201003	0'	HLW Vitrification Building Architectural Room Finish Schedule EL 0'-0"
24590-HLW-A5-A19T-05202001	11'	HLW Vitrification Building Architectural Room Finish Schedule EL 11'-0
24590-HLW-A5-A19T-05202002	11'	HLW Vitrification Building Architectural Room Finish Schedule EL 11'-0"
24590-HLW-A5-A19T-05203001	30'	HLW Vitrification Building Architectural Room Finish Schedule EL 30'-0"
24590-HLW-A5-A19T-05204001	49', 62", 76'	HLW Vitrification Building Architectural Room Finish Schedule EL 49'-0" & 62'-0" & 76/-0"

PTF DRAWING NO.	EL.	PTF DRAWING TITLE
24590-PTF-A0-A10T-00100001	--	PTF Vitrification Building Architectural Drawing Index
24590-PTF-A5-A19T-05200001	(-)45'	PTF Vitrification Building Architectural Room Finish Schedule EL (-)45'-0"
24590-PTF-A5-A19T-05201001	0'	PTF Vitrification Building Architectural Room Finish Schedule EL 0'-0"
24590-PTF-A5-A19T-05201002	0'	PTF Vitrification Building Architectural Room Finish Schedule EL 0'-0"
24590-PTF-A5-A19T-05201003	0'	PTF Vitrification Building Architectural Room Finish Schedule EL 0'-0"
24590-PTF-A5-A19T-05202001	28'	PTF Vitrification Building Architectural Room Finish Schedule EL 28'-0"
24590-PTF-A5-A19T-05202002	28'	PTF Vitrification Building Architectural Room Finish Schedule EL 28'-0
24590-PTF-A5-A19T-05202003	28'	PTF Vitrification Building Architectural Room Finish Schedule EL 28'-0"
24590-PTF-A5-A19T-05203001	56'	PTF Vitrification Building Architectural Room Finish Schedule EL 56'-0"
24590-PTF-A5-A19T-05204001	77'	PTF Vitrification Building Architectural Room Finish Schedule EL 77'-0"
24590-PTF-A5-A19T-05205001	98'	PTF Vitrification Building Architectural Room Finish Schedule EL 98'-0"

Appendix E
Color Scheme

1.0 The finish coat on all steel items and equipment other than electrical shall be ANSI* 70 Gray or approved substitute to ANSI color standard. (*American National Standards Institute)

2.0 The finish coat on standard electrical components and cabinets shall be ANSI 61 Gray or approved substitute to ANSI color standard.

3.0 Floor coatings and sumps shall match Benjamin Moore color 2143-50 Old Prairie or approved substitute.

4.0 Wall coatings shall match Benjamin Moore color 2143-60 Moonlight White or approved substitute.

5.0 Floor coatings color shall transition over the standard coving and up the wall 6". The thickness on the floor/wall coving and wall above the floor coating shall match the wall coating thickness. For gypsum board walls refer to drawing 24590-WTP-A3-A10T-04200002, WTP process Building Architectural Common Interior Wall Details, using detail #4, Detail for typical rated wall base at concrete floor.

Appendix F
Coating Manufacturer's Product Identity Certification Record

Project Name: _____ Coating Manufacturer: _____

Project Number: _____ Purchase Order Number: _____

Project Location: _____ Contract Number: _____

Coating Applicator: _____ Generic Coating Type: _____

Product Name: _____ Product Number: _____

(For multi-component products, provide data for all components. Provide the standard range and actual batch values for each test)

TEST RESULTS		**Component A Batch No.**		**Component B Batch No.**	
Test	**Test Method Used**	**Standard Range**	**Batch Actual**	**Standard Range**	**Batch Actual**
Weight per Gallon					
Viscosity					
Flash Point (Typical)					
% Solids by volume (Typical)					
Cure to recoat time @ 60F, 70F, 80F & 90F (Mfg. recommended)					
Batch Size					
Date of Mfg.					
Shelf Life (months)					
Expiration Date					

COMMENTS:

I hereby certify that the coating materials described above were manufactured with the same formulation, raw materials, production methods, and quality control standards as the coating materials originally tested and/or accepted for use at the River Protection-Waste Treatment Plant (WTP) Project site, located in the 200 East Area of the Hanford Site in Washington State in accordance with the requirements of Specifications 24590-WTP-3PS-AFPS-T0001, 24590-WTP-3PS-AFPS-T0003, 24590-WTP-3PS-AFPS-T0004 & 24590-WTP-3PS-AFPS-T0006.

Signed: _____ Date: _____

Title: _____ Company: _____

Appendix G
Surface Preparation and Coating Inspection Form

Page __ of ___

REPORT NO:_____ DATE: _____
PROJECT:_____ DAY: M T W T F S S
SUBCONTRACTOR:_____ SHIFT: _____
EQUIPMENT/AREA:_____ INSPECTOR: _____
SUBSTRATE: STEEL/CONCRETE/OTHER- _____ COATING SPEC NO/REV:_____
ENVIRONMENTAL CONDITIONS:

WORK ACTIVITY						
TIME						
DRY BULB TEMP. °F						
WET BULB TEMP. °F						
RH %						
DEW POINT °F						
SURFACE TEMP. °F						
BLOTTER TEST						

PRE-SURFACE PREPARATION:
SP-1:_____ MASKING/PROTECTION:_____ SURFACE DEFECTS:_____

SURFACE PREPARATION:
METHOD:_____ ABRASIVE TYPE/SIZE/STORAGE:_____
RECYCLED ABRASIVE OIL FLOATATION TEST:_____ABRASIVE CONDUCTIVITY TEST:_____
CLEANLINESS SPEC:_____ ACTUAL:_____PROFILE SPEC:_____ ACTUAL:_____
EQUIPMENT:_____

COATING MATERIALS & MIXING:
PRODUCT(S)_____
BATCH NO(S)/QUANTITIES/EXPIRATION DATE:_____/_____/_____
THINNERS/BATCH NO(S)/THINNING RATIO:_____/_____/_____
STORAGE:_____ MIXING: _____ INDUCTION TIME:_____
MATERIAL TEMPERATURE:_____ POT LIFE EXPIRATION TIME:_____
COATING/LINING APPLICATION START TIME:_____ FINISH TIME:_____
COAT: PRIMER/PRIMER T.U./SECOND/SECOND T.U./THIRD/THIRD T.U./OTHER
METHOD:_____ WFT:_____ RECOAT TIME/TEMP:_____ CURE TIME/TEMP:_____
EQUIPMENT:_____

APPLIED COATING:
VISUAL INSPECTION (FILM IMPERFECTIONS):_____
DRY FILM THICKNESS: SPEC:_____ ACTUAL:_____ METHOD:_____
HOLIDAY TEST:_____ METHOD:_____ OTHER TESTING:_____ METHOD:_____
TOUCH-UP AND REPAIR:_____ FINAL CURE:_____

COMMENTS: (*Use reverse side or attach extra pages*)

_____/_____
INSPECTOR'S SIGNATURE/DATE

Appendix H
Manufacturer's Standard Coating Data Sheet

The SUBCONTRACTOR proposes the following Manufacturer's Standard (Mfg. Std.) or alternate coating system that is suitable for the exposure conditions of steel items and equipment in radiation and non-radiation areas.

1. **Equipment Description:** _____
   A. Tag Number _____
   B. Part(s) i.e. skirt, shell, channels, lugs, etc.* _____
   C. Design/Operating Temperatures, designate °F or °C ..... _____ °F _____ °C
   D. Does Equipment Receive Steam out (Yes/No), Temperature _____ °F _____ °C
   E. Insulated/Uninsulated _____
   F. Fireproofing (Yes/No) _____
   G. Carbon Steel (CS), Stainless Steel (SS), other (List) _____
2. **SUBCONTRACTOR:**
3. **Surface Preparation:** SSPC No./Profile _____ / _____
4. **Coating System Designation:** (Code)

	First Coat	Second Coat	Third Coat
A. Type of Coating.....			
B. Coating Mfg./No.**			
C. Dry Film Thickness (Min/Max in mils)/(μm) ...			
D. Wet/Film Thickness (Min/Max in mils)/(μm)			
E. Curing Method.....			
F. Color.....			
G. Dry to Recoat			
H. Pot Life			
L. Thinner / %			

5. **Total DFT of System:** (Mils/μm)(Min/Max)..... _____ / Min. _____ /Max.
6. **Material Storage:** Temperature Requirements (Min/Max) _____ / _____
7. **Shelf Life:** ..... _____ Months
8. **Application Environmental Limits:**
   A. Temperature Ambient and Surface (Min/Max) ..... _____ / _____ _____ / _____
   B. Humidity (Min/Max)..... _____ / _____
   C. Dew Point ≥5°F above surface temp. (Yes/No)..... _____
9. **Protection of surfaces that will be inaccessible after equipment installation (such as underside of base plates, interior of fans, vessels or equipment housings)** _____
10. **Rust Preventative for machined faces:** (**Mfg./No.) _____
11. **Quantity of touch-up coating supplied:** _____
12. **Additional information:** (attach extra page as necessary) _____

* Use additional copies of this form for each part described in 1 above that requires a different coating system. A completed copy of this data sheet shall be submitted to CONTRACTOR with the initial vendor data submittal.

** Include manufacturer's technical data sheets and MSDS' for each proposed coating, preservative & solvent

Appendix I- Secondary Containment Installation Typical Details

- **Installation Detail 1A-Floor /Wall Junction**
- **Installation Detail 1B-Wall/Wall Junction**
- **Installation Detail 2A-Reinforced Floor/Wall Junction**
- **Installation Detail 2B-Reinforced Wall/Wall Junction**
- **Installation Detail 3-Control Joint**
- **Installation Detail 4-Crack Repair**
- **Installation Detail 5A-Embed Plates without Steel Attachment**
- **Installation Detail 5B-Embed Plates with Steel Attachment**
- **Installation Detail 6-Perimeter Key**
- **Installation Detail 7-Floor or Wall Steel Embed With Stainless Steel Plate Overlay**

INSTALLATION DETAIL 1A - FLOOR/WALL JUNCTION

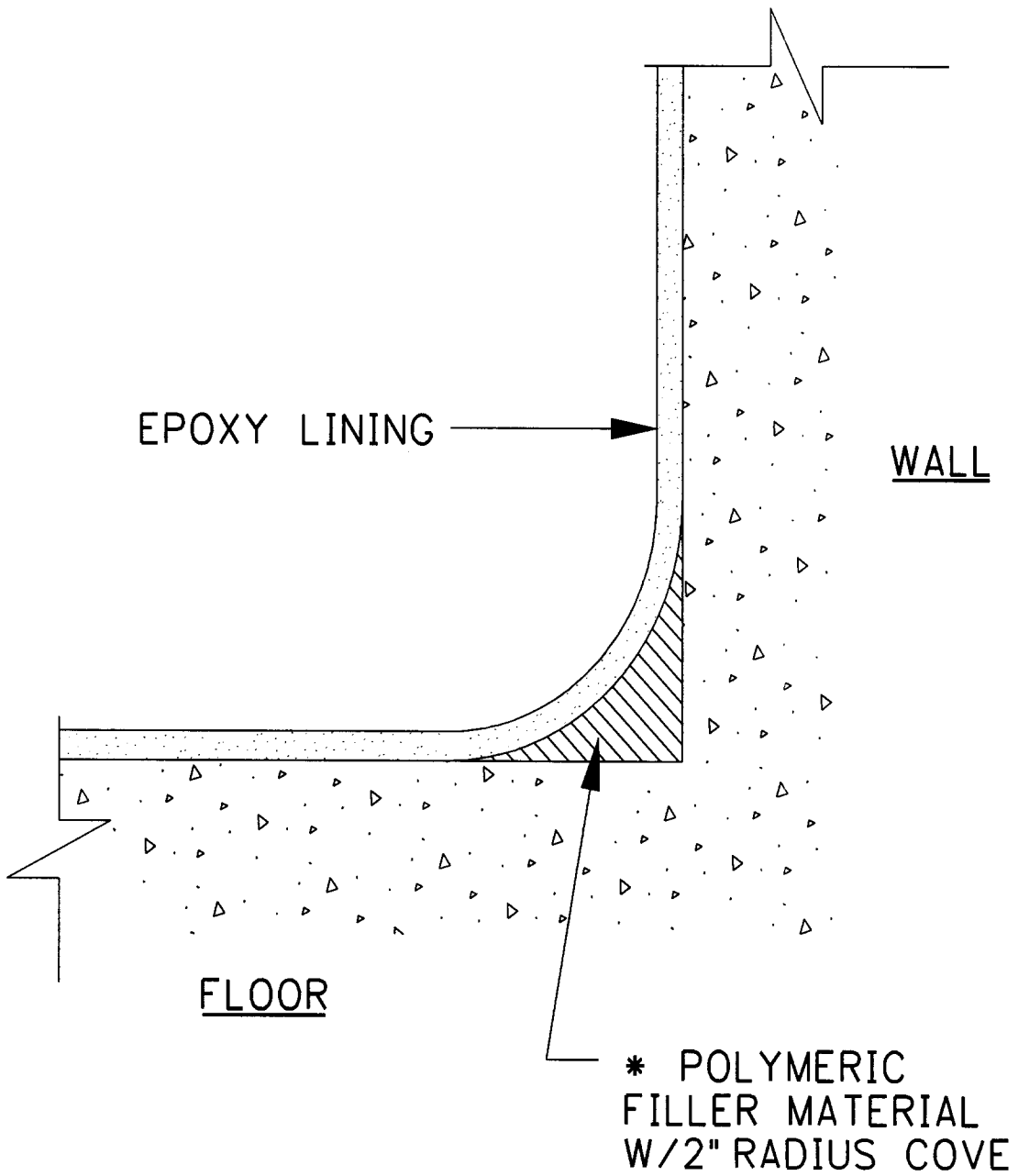

* REFER TO SPEC SECTION 6.2.1.2

INSTALLATION DETAIL 1B - WALL/WALL JUNCTION

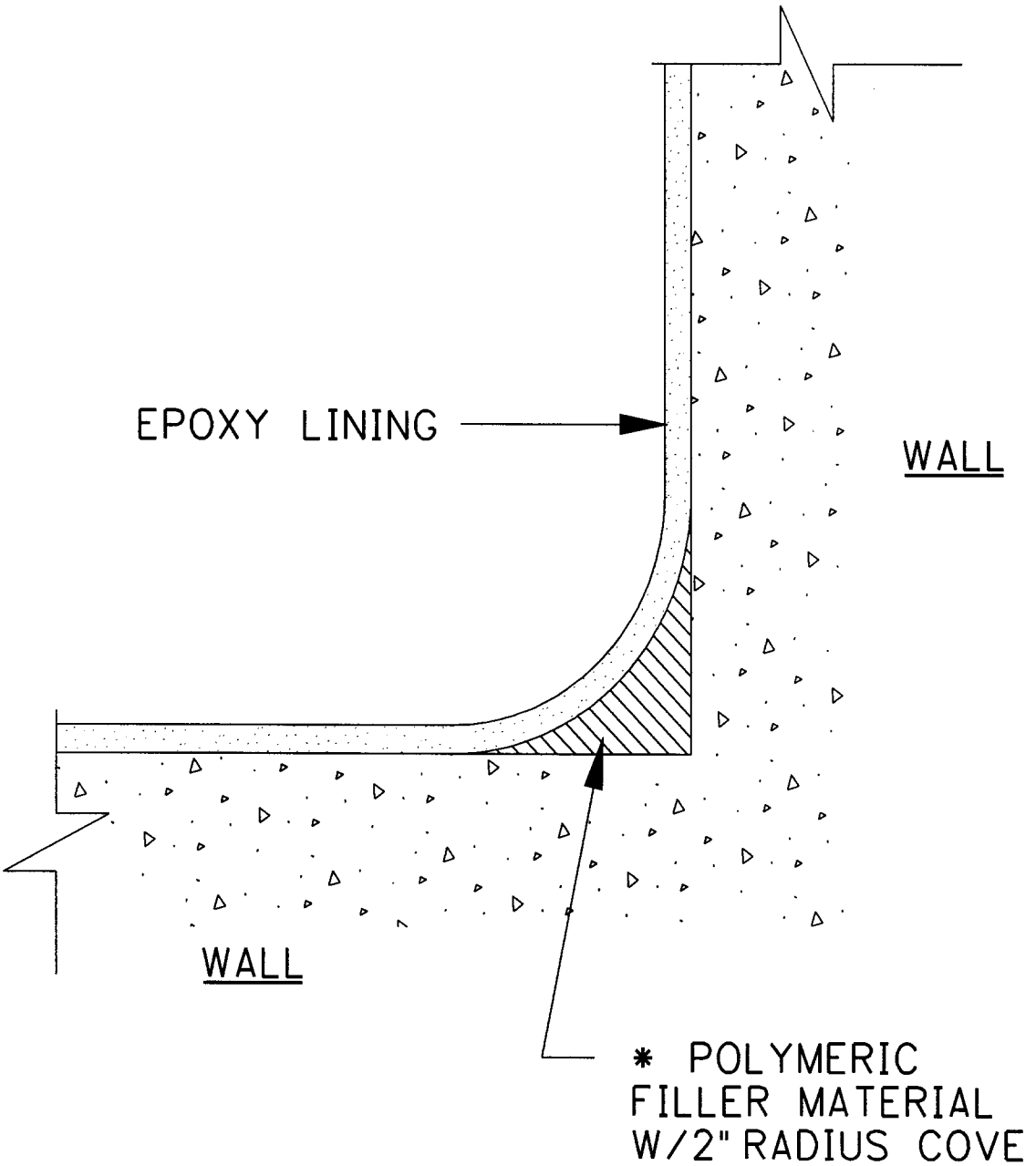

* REFER TO SPEC SECTION 6.2.1.2

INSTALLATION DETAIL 2A - REINFORCED FLOOR/WALL JUNCTION

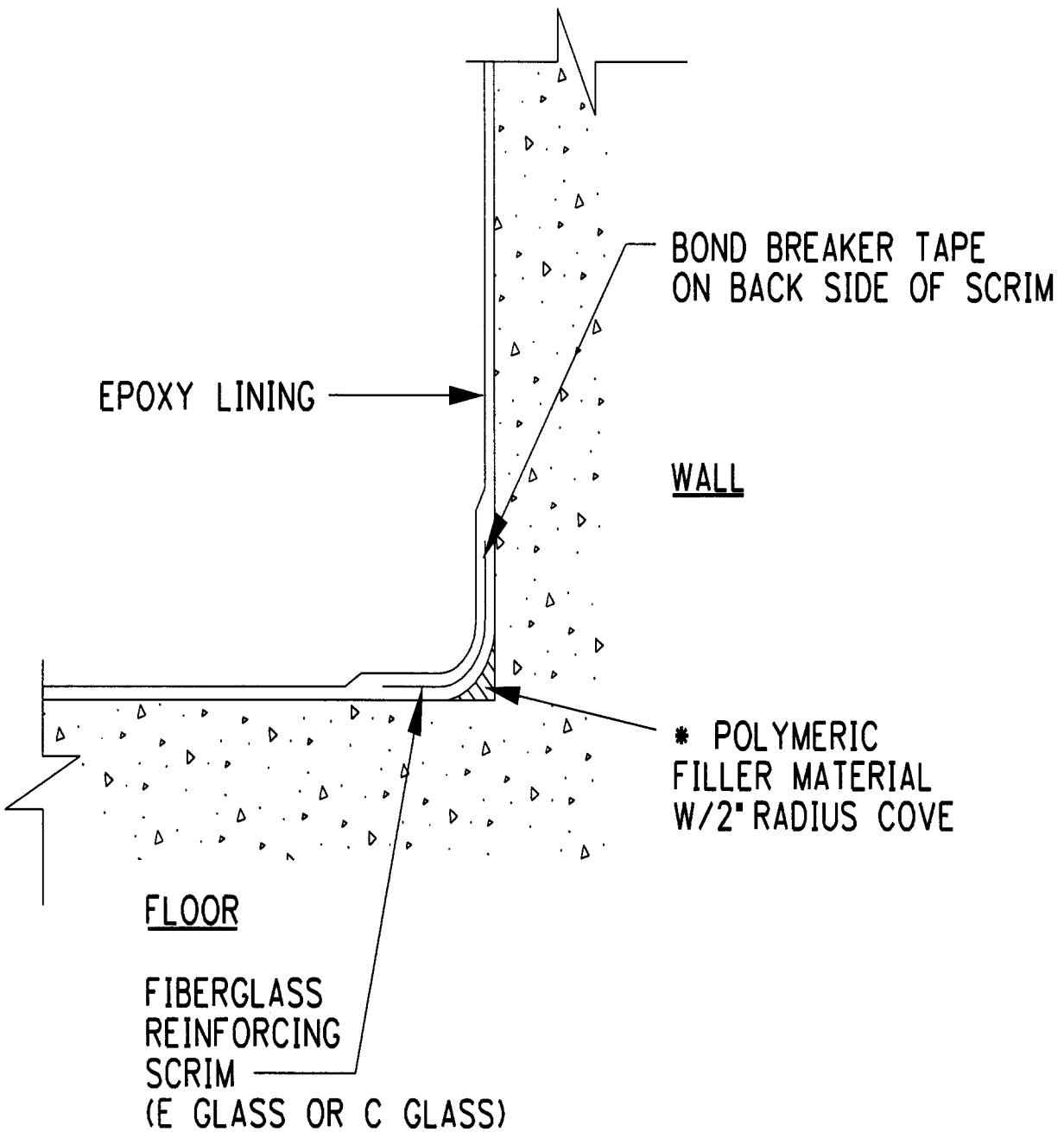

* REFER TO SPEC SECTION 6.2.1.2

INSTALLATION DETAIL 2B - REINFORCED WALL/WALL JUNCTION

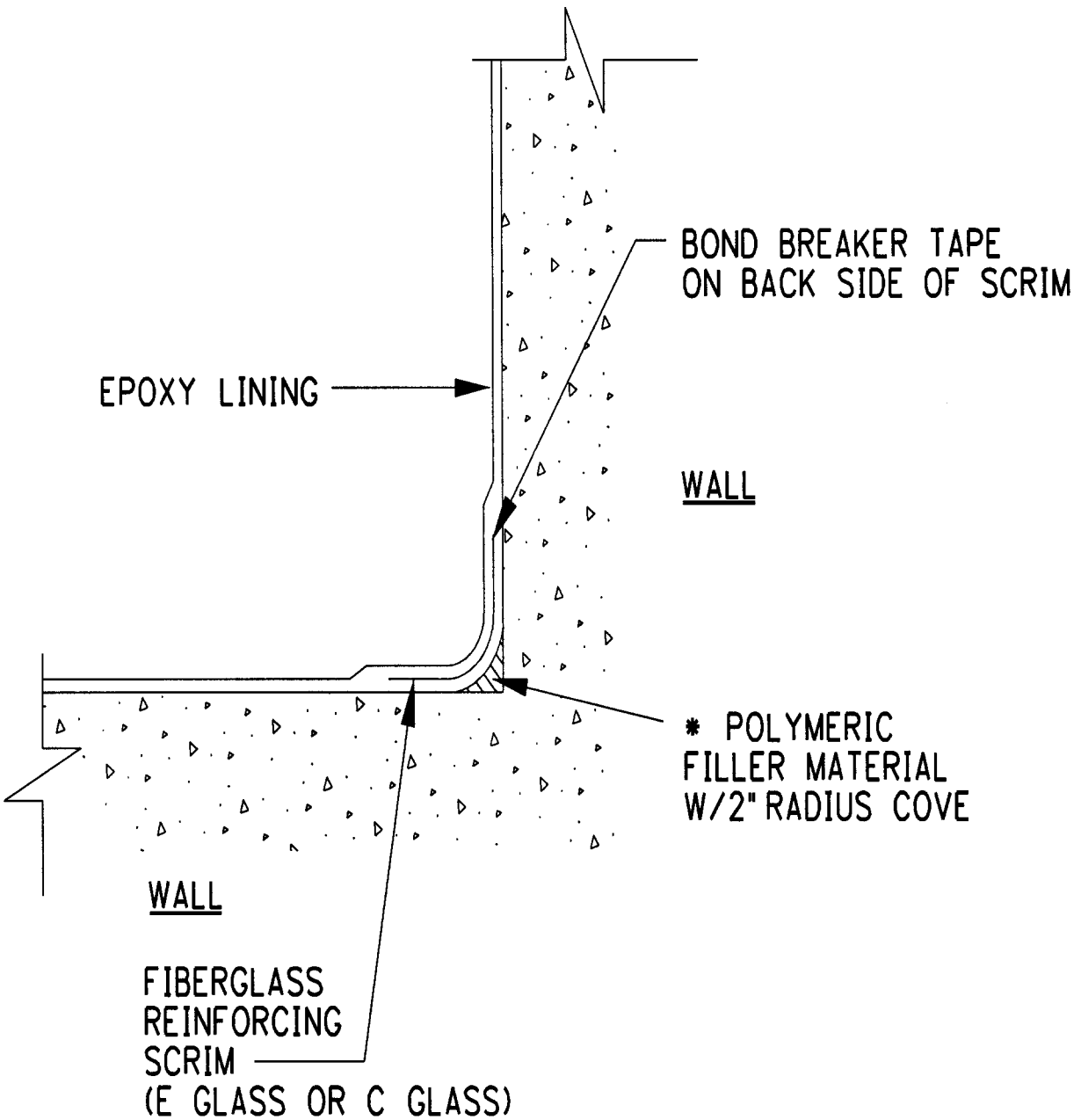

* REFER TO SPEC SECTION 6.2.1.2

INSTALLATION DETAIL 3 - CONTROL JOINT, NO CRACK FAILURE

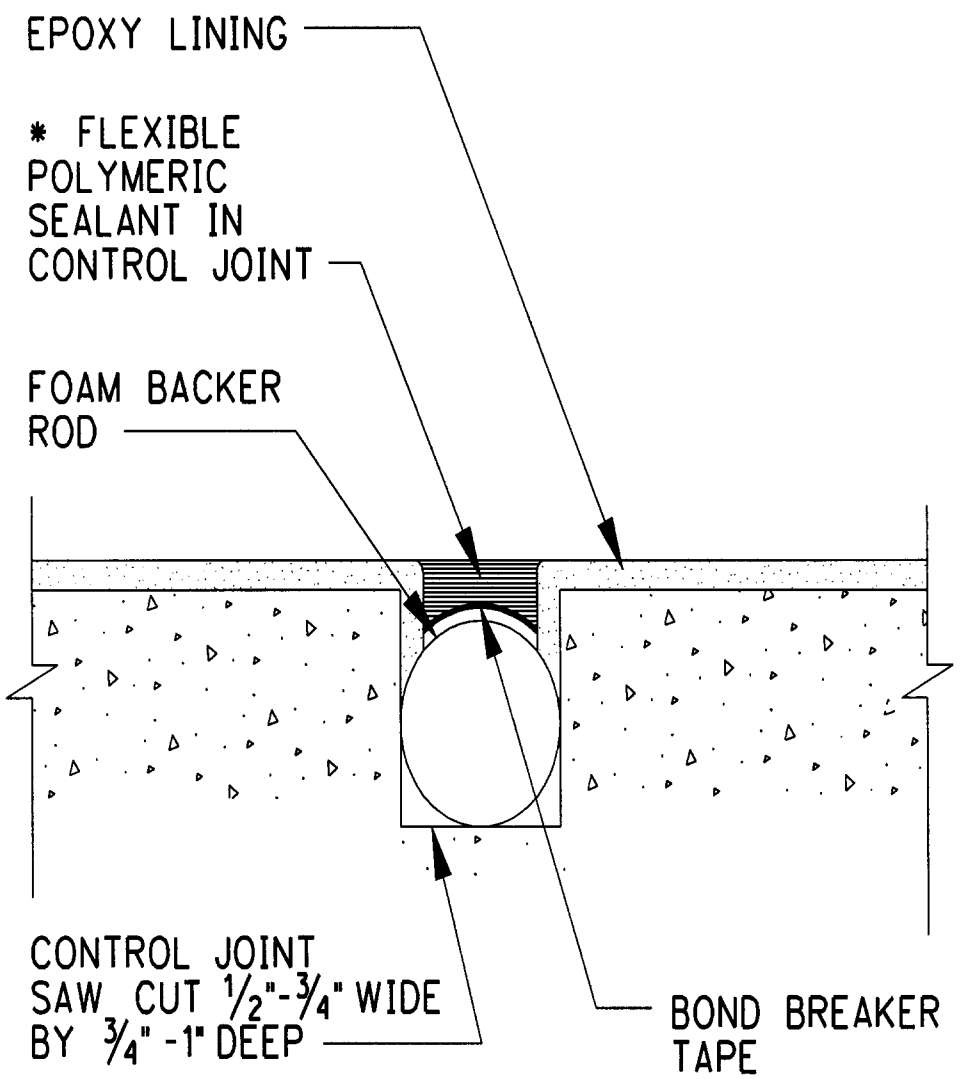

* REFER TO SPEC SECTION 6.2.1.4

CONCRETE FLOOR/WALL

INSTALLATION DETAIL 4 - CRACK REPAIR

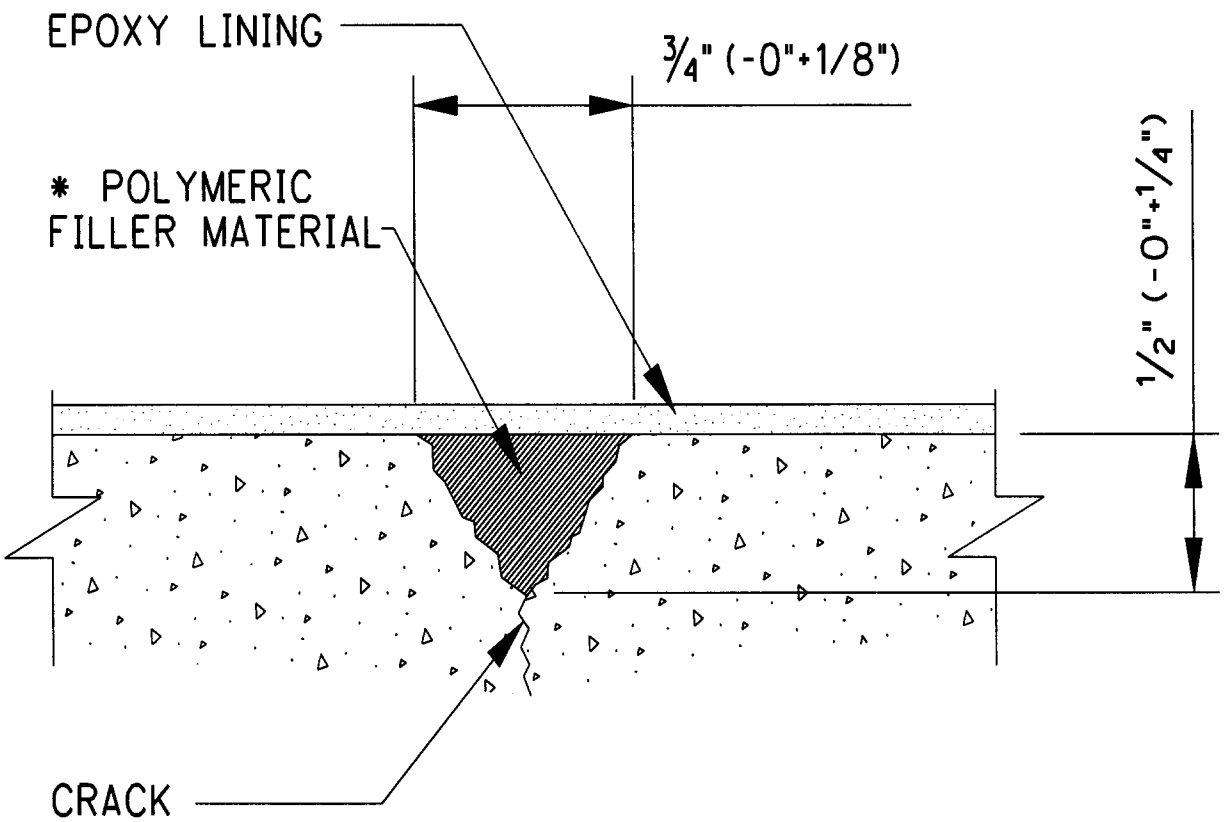

* REFER TO SPEC SECTION 6.2.1.2

CONCRETE FLOOR/WALL

INSTALLATION DETAIL 5A - EMBED PLATES WITHOUT STEEL ATTACHMENT

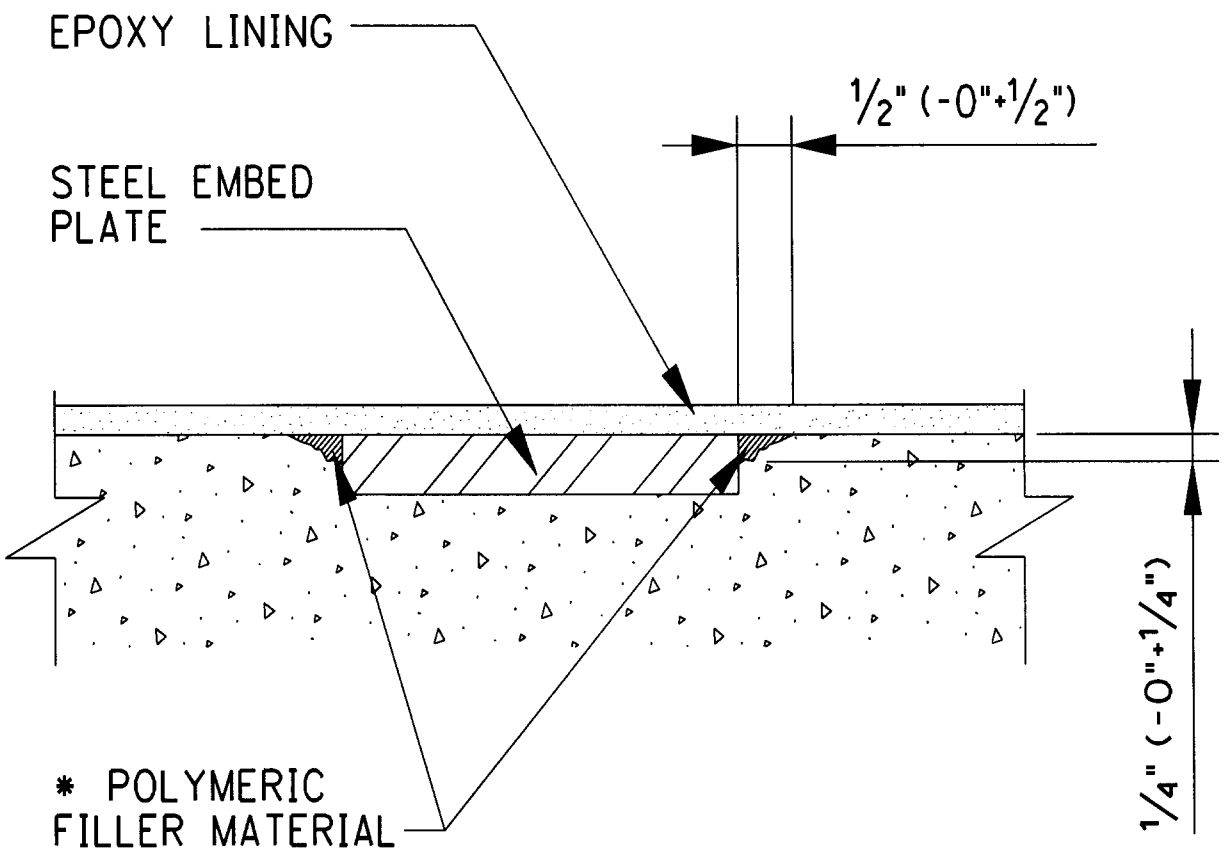

* REFER TO SPEC SECTION 6.2.1.2

CONCRETE FLOOR/WALL

INSTALLATION DETAIL 5B - EMBED PLATES WITH STEEL ATTACHMENT

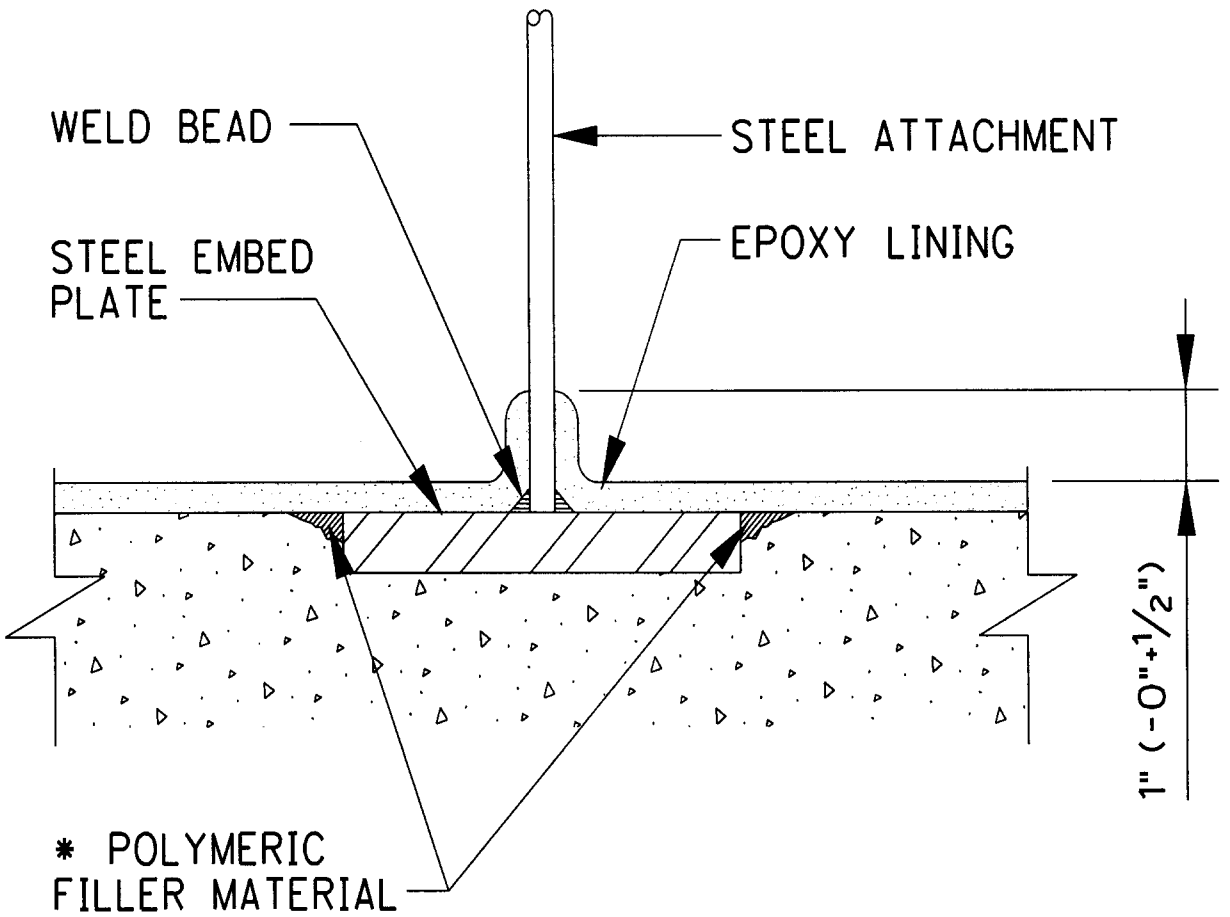

* REFER TO SPEC SECTION 6.2.1.2

CONCRETE FLOOR/WALL

INSTALLATION DETAIL 6 - PERIMETER KEY

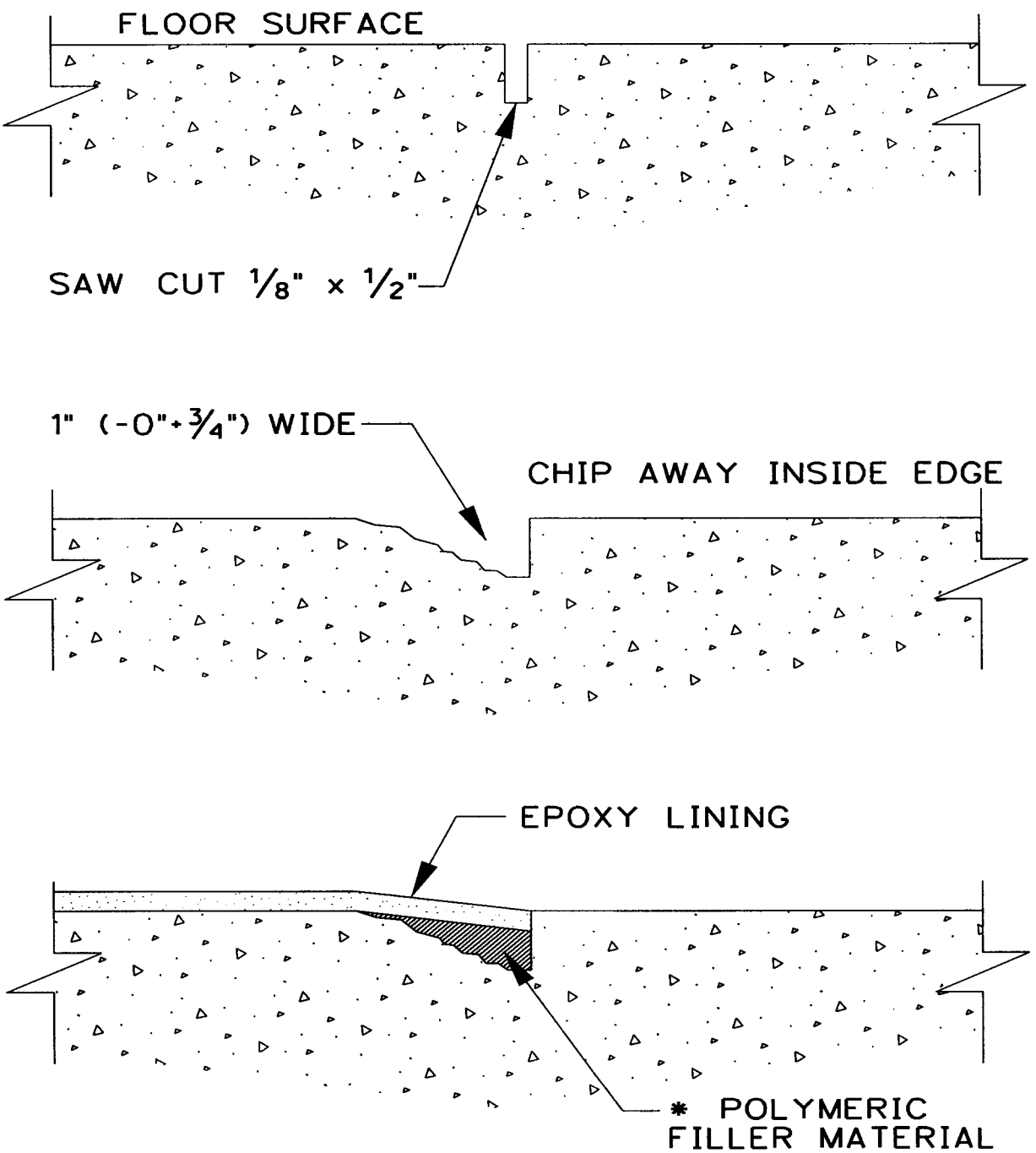

* REFER TO SPEC SECTION 6.2.1.2

INSTALLATION DETAIL 7 - FLOOR OR WALL STEEL EMBED WITH STAINLESS STEEL PLATE OVERLAY

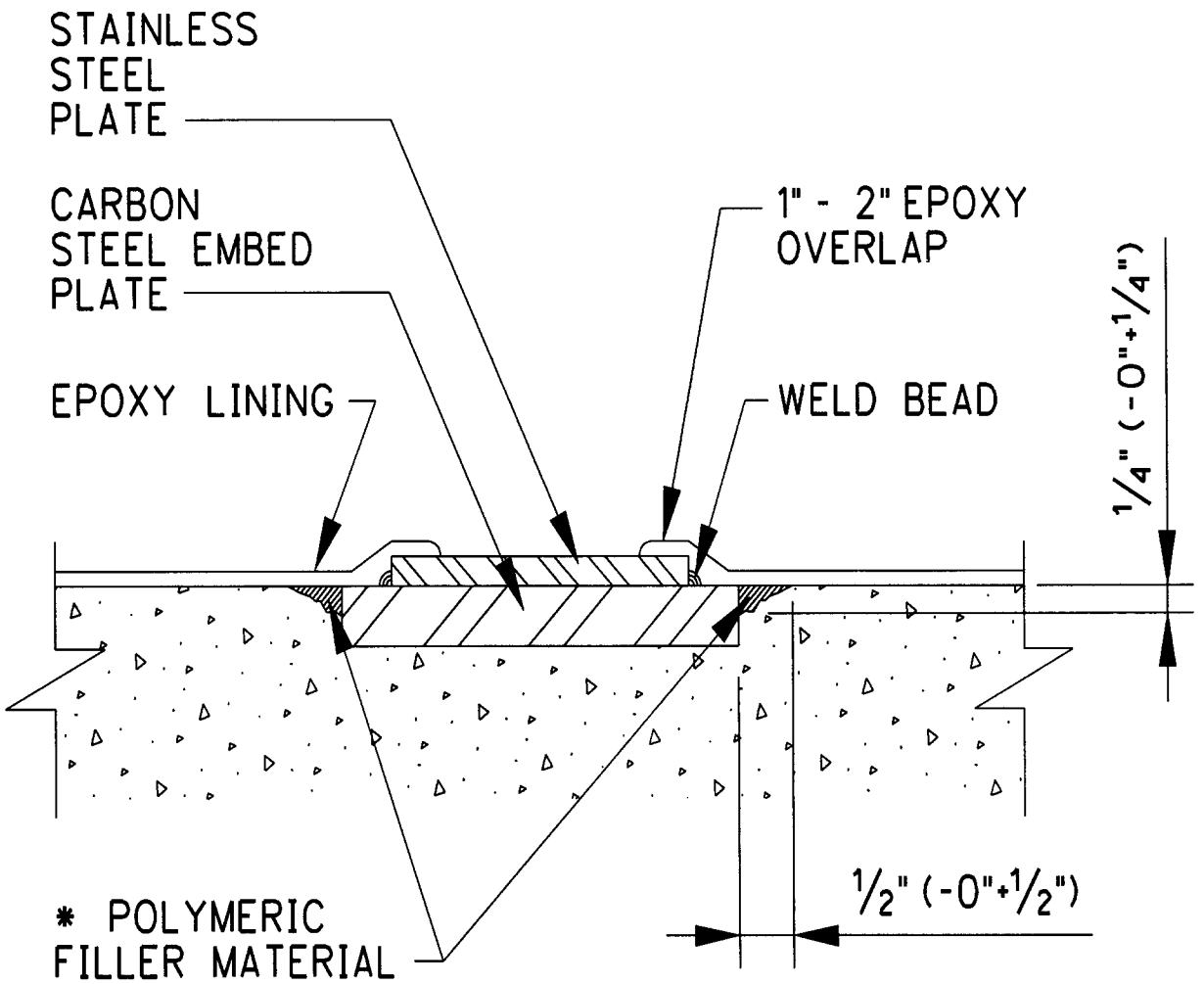

* REFER TO SPEC SECTION 6.2.1.2

CONCRETE FLOOR/WALL

R10630740

RIVER PROTECTION PROJECT – WASTE TREATMENT PLANT

ENGINEERING SPECIFICATION

FOR

POSITIVE MATERIAL IDENTIFICATION (PMI) FOR SHOP FABRICATION

STEVEN WAKEMAN VAIL
STATE OF WASHINGTON
39250
REGISTERED
PROFESSIONAL ENGINEER

9/16/05

EXPIRES: 12/07/05

Content applicable to ALARA? ☐ Yes ☒ No

ADR No. **Rev**

ISSUED BY
RPP-WTP PDC

Quality Designator
QL
DOE Contract No. DE-AC27-01RV14136

NOTE: Contents of this document are Dangerous Waste Permit affecting.

This bound document contains a total of 11 sheets

REV	DATE	BY	CHECK	REVIEW	E&NS	QA	DPEM
4	9/16/05	[signature]	APR	NA	NA	NA	[signature]
3	7/9/04	DA	APR	NA	NA	NA	MH
2	11/17/03	DA	SV	NA	NA	NA	MH
1	3/27/03	JJ	SV	NA	NA	NA	MH
0	9/17/02	JJ	CM	NA	NA	NA	SK

SPECIFICATION No. 24590-WTP-3PS-G000-TP002 **Rev** 4

Revision History

Revision	Reason for Revision
0	Issued for Permitting Use
1	Issued for Permitting Use
2	Issued for Permitting Use
3	Issued for Permitting Use
4	Issued for Permitting Use

Note: Please note that source, special nuclear and byproduct materials, as defined in the Atomic Energy Act of 1954 (AEA), are regulated at the U.S. Department of Energy (DOE) facilities exclusively by DOE acting pursuant to its AEA authority. DOE asserts, that pursuant to the AEA, it has sole and exclusive responsibility and authority to regulate source, special nuclear, and by product materials at DOE-owned nuclear facilities. Information contained herein on radionuclides is provided for process description purposes only.

Contents

1 Scope 1
2 Applicable Documents 1
3 Technical Requirements 1
4 Scope of PMI 3
5 Identification 3
6 Records of PMI 4
7 Acceptance, Rejection and Retesting Requirements 5
8 Design Changes Incorporated by Reference 8

Tables

Table 1 PMI Requirements for Shop Fabricated Items/Pieces 6
Table 2 Systems, Facilities and Fluid Codes Requiring PMI Testing (Shop Fabricated Piping) 7
Table 3 Base Material and Weld Filler Metal Composition Requirements (Wt %) 8

1 Scope

This Specification covers the minimum requirements for and the extent of application of Positive Material Identification (PMI) testing of shop fabricated pressure retaining equipment and piping used in services in contact with process fluid. This Specification applies to shop fabrication only. For field fabrication PMI requirements, see 24590-WTP-3PS-G000-T0010.

2 Applicable Documents

2.1 Reference Documents/Drawings

2.1.1 Deleted

2.1.2	24590-WTP-3PS-G000-T0010	Engineering Specification For Positive Material Identification (PMI) For Construction

3 Technical Requirements

3.1 General

The purpose of PMI is to ensure that the material is correctly supplied. Materials, equipment, and piping requiring PMI per this Specification are identified in Table 1. Specifically, within the black cells, PMI is required for all radioactive and non-radioactive systems and all fluid codes. Outside the black cells, PMI is required for shop fabricated items fabricated from the alloys identified in Table 1 when used in radioactive and dangerous waste systems as identified in Table 2. Table 2 lists systems, facilities, and fluid codes requiring PMI testing for shop fabricated piping. When required by this Specification, PMI testing will be done on each component of a pressure retaining assembly. This shall include each individual segment of pipe, each plate, and all other pieces of base materials (e.g., forgings, fittings, tubing, etc.) and all required pressure retaining welds in contact with process fluids made by the Seller.

For purposes of this Specification, the following definitions are used:

Alloy: Metallic materials (including welding filler materials) which contain alloying elements including but not limited to: Chromium (Cr), Nickel (Ni), Molybdenum (Mo), Copper (Cu) or Tungsten (W).

300 Series Stainless: Austenitic Stainless Steels (304L, 316L, etc.)

6 % Mo: AL6XN, 254 SMO, etc.

Duplex Stainless Steel: CD4MCu, etc.

Nickel Base: Alloy C-22, 625, 690, etc.

3.2 Responsibility

The Seller shall submit to the Buyer, for review and comment prior to fabrication, procedures covering how PMI will be conducted and documented. The Seller's procedures shall include the instrument manufacturer's procedures and requirements, operator qualification/re-qualification requirements, instrument calibration method(s), calibration frequency during testing, criteria for acceptance or rejection, material identification method, and record keeping.

3.3 Verification Method

3.3.1 Instruments used for PMI shall be of the type that will provide quantitative, recordable, elemental composition results for positive identification of the alloy elements present.

a PMI shall be done per the procedures outlined by the manufacturer of the PMI instrument being used. Modification of these procedures must be approved by the Buyer.

b Each PMI instrument shall be calibrated according to the manufacturer's requirements.

3.3.2 The methods/instruments listed below are acceptable. In application, they must not be used in a "go-no-go" mode. The only acceptable objective is the positive identification, listing, and quantification of the relevant elements listed in section 7.

a Portable X-ray fluorescence analyzers. Use is limited to the following instruments or their equivalent unless prior approval is given by the Buyer:

- TN Technologies Alloy Analyzer 9266, 9277 (The Metallurgist XR) or 9288
- Outokumpu X-Met 840, or X-Met 880
- Niton metal Alloy Analyzer (800 Series)
- Metorex X-Met 920 Metal Analyzer
- Innov-X Systems XT Series Analyzer

b Portable optical emission analyzers. Use is limited to the following instruments or their equivalent unless prior approval is given by the Buyer:

- SpectroPort Model TP-07 or TFO-02
- Outokumpu ARC-MET 900 or the New Spectrotest
- Spectrotest and Spectrotest Jr.

Any other instrument will require Buyer's approval.

Note: Arc strikes, if any, need not be removed.

3.3.3 In lieu of using portable instruments, chemical analysis can be performed on actual material samples. Care must be exercised while collecting samples, as contamination can be contributed by the removal tools. Sample extraction shall not weaken or reduce the functionality of the component. Laboratory analysis reports shall be traceable to the individual component from which the sample was taken (See section 6, below).

3.3.4 Parts that are too small to be tested using an alloy analyzer are exempt from PMI testing. If such exemption is claimed, the PMI procedure shall specify the minimum part size capable of being tested.

3.4 Welding Consumable Control

In addition to PMI testing required by this Specification, the Seller shall have in place, and implement, welding consumable material control systems that can be verified by auditing. PMI of completed pressure retaining welds is required as indicated in Table 1. Production "Run Off" weld test coupons may be used for chemical analysis checks.

4 Scope of PMI

PMI shall be performed on completed equipment, or assembled parts of equipment, at such time as to ensure that only verified materials have been used in the fabrication and final assembly of components. If the assembled equipment configuration prevents PMI of any individual part, then that part shall be tested prior to assembly and be noted as such on the PMI documentation.

4.1 Vessels, Exchangers, Tanks, Filters and other Manufactured Equipment

Vessels, exchangers, and other manufactured equipment shall have PMI testing performed at the Seller's facilities. This shall include piping and components supplied as part of an equipment "package" or skid.

4.2 Shop Fabricated Piping

4.2.1 PMI is required for all piping and piping components and for circumferential pressure retaining welds as indicated in Tables 1 and 2.

4.2.2 PMI is not required on autogenous welds, fillet welds, or socket welds.

4.3 Deleted

4.4 Valves and Pumps

PMI of valves and pumps is required for materials as indicated in Table 1 and Piping Fluid Codes as indicated in Table 2.

4.5 Bulk Materials (Straight Run Piping, Fittings, Stock Valves, Etc.)

PMI is required as indicated in Table 1.

5 Identification

5.1 General

All shop fabricated items/pieces that have been successfully subjected to the required PMI shall be marked. The mark shall be durable and last through transportation and receiving inspection at the Buyer's facility. See section 7 for items that do not pass PMI.

5.2 Marking Materials

Marking materials and adhesive tape selected shall not cause corrosion or other harmful effects. Requirements for marking materials:

- The total chloride/flouride content shall not exceed 200 ppm.
- The total sulfur content shall not exceed 400 ppm.
- The total of low melting point metals such as lead, zinc, copper, tin, antimony, and mercury shall not exceed 1 percent. Of this mercury shall not exceed 50 ppm.

5.3 Equipment and Equipment Components

When it has been verified that the material has a composition consistent with the material specified, then it must be stamped with letters "PMIV". Use low stress stamps for identification. Items that cannot be stamped shall have an alternate system of marking. Heat exchanger tubing shall not be stamped. Any alternate system, and the items for which it will be used, must have Buyer approval. To the maximum extent possible, the stamping/marking shall be located for ease of future reference/verification.

5.4 Piping Materials

When it has been verified that the material has a composition consistent with the material specified, then a colored adhesive tape, or other approved marking method, shall be applied at one end to facilitate proper identification.

5.5 Fasteners and Small Parts

Fasteners and small parts shall be marked in accordance with the Seller's procedure using a hard marking method, an indelible ink, or paint.

6 Records of PMI

Results shall be recorded on PMI report forms, which shall indicate, as a minimum, the following for each examination:

a Name of Inspector
b Date of Testing
c Test method, including PMI instrument name and serial number
d Equipment tag number or pipe spool number (purchase order number for bulk items) for the specific piece tested
e Quantitative analysis results for relevant elements (see section 7)

A map shall be prepared for fabricated equipment or pipe spool, including components and welds, showing the locations of PMI testing.

An extended Shop Spool Sheet shall be provided for each individual spool number where PMI was done.

In the case of bulk items, PMI results may be submitted in the form of a certificate verifying that parts were tested according to the requirements of this Specification. Results shall be reported by heat/lot and shall include the following:
a Name of Inspector
b Date of Testing
c Test method, including PMI instrument name and serial number

d Type and number of pieces tested
e Acceptable composition ranges for the relevant elements (see section 7)
f Material identified

PMI forms shall become a part of the permanent inspection records. Seller shall submit the completed forms as part of the Final Document Package when required by the Form G-321-V in the Purchase Order.

7 Acceptance, Rejection and Retesting Requirements

All materials tested shall be identified by the PMI instrument as being consistent with the composition of the specified material. The results shall fall within the chemical composition requirements of the ASTM, AWS or other applicable material specification allowing for the accuracy of the instrument. Any questionable PMI result shall be re-analyzed by the same or another instrument, after verification of proper surface preparation. See section 7.1, below, for materials and welds that fail to meet requirements on the second analysis.

The following elements shall be identified and recorded, even if the instrument does provide immediate identification (e.g. display of "316", "6 Mo", etc.):

Alloy	Elements
304, 304L	Ni, Cr
316, 316L	Ni, Cr, Mo
347	Ni, Cr, Nb
Duplex, 6% Mo, 254 SMO, AL6XN, etc.	Ni, Cr, Mo, Cu
Nickel base alloys, C-22, 625, 690, etc.	Ni, Cr, Mo, W

Welds joining dissimilar base materials or that do not match the base material composition may include an allowance for dilution. Acceptable composition ranges for commonly used combinations of base material and weld filler metals are included in Table 3. Other combinations, when required, shall be identified to the Buyer for approval.

7.1 If any material, component, or weld of a type not requiring 100% testing is found to be unacceptable, all other materials, components, or welds (same heat, lot, etc.) represented by that failed item shall be considered suspect. The Buyer shall be notified immediately if a component is confirmed to have failed the PMI. The Seller will then have the following options, with Buyer concurrence:

a Scrapping/removing all materials, components, or welds represented by the test piece (all of that heat, lot, etc.) and replacing with new components or filler metals, or
b Performing 100 percent examination of the remainder of the represented materials, components, or welds, and replacing each item that fails the PMI check, or
c Verifying correct chemistry by laboratory chemical analysis.

7.2 If questionable values obtained with portable analyzers are verified by laboratory analysis, the laboratory analysis data shall be used and recorded.

7.3 Any item or component containing materials that have not passed the PMI shall be clearly marked as "DO NOT USE – PMI FAILED" and segregated from the remainder of the stock.

Table 1 PMI Requirements for Shop Fabricated Items/Pieces

ITEM - (Note 1)	VERIFICATION REQUIRED
Type 304 & 304L Stainless Steel Components	Yes – 100 % when in black cells
Type 316, 316L, & 347 Stainless Steel Components	Yes -- 100 %
6% Mo Components	Yes – 100 %
Duplex Stainless Steel Components	Yes – 100%
Nickel Base Alloy Components	Yes – 100 %
Alloy Valves	Yes – 100 % Body and Bonnet Only
Alloy Pumps	Yes – 100 % Casing Only
Alloy Piping (Spools, Jumper Pipes, Fittings, and Straight-Run Pipe)	Yes – 100 % for 6 % Mo, Nickel base alloys and all Jumper Pipes Yes -- 100 % for 316L used in black cells or for the systems and piping fluid codes listed in Table 2 Yes – 100 % for 304L used in black cells
Alloy Pressure Retaining Welds in Contact with Process Fluids	Yes – 100 % of completed welds that join material required to have PMI testing
Bolting – B8M used for Pressure Retaining Connections	Yes – 5 % of total bolts, minimum one check per heat
Alloy Heat Exchanger Tubing	Yes – 5 % of total tubes, minimum one check per heat
Venturis	Yes – 100 % pipes and welds

Note:

1. The following items are exempted unless specifically designated for PMI by the Purchase Order:

a All type 304L stainless steel components, piping, and welds, except for those located in black cells
b All type 304L and 316L stainless steel field welds
c Non pressure-retaining parts, such as baffles, trays, tray clips, supports, pall-rings, support rings, etc.
d Non pressure-retaining welds and sections of piping, such as drains, vents, overflows, etc.
e Gaskets
f Tubing and instrumentation
g HVAC ducting
h Piping components located within piping systems for which PMI is NOT required

Table 2 Systems, Facilities and Fluid Codes Requiring PMI Testing (Shop Fabricated Piping)

System	System Name	Facility	Fluid Code
ASX	Autosampling System	PTF, LAW, HLW, LAB	PB,ZF,ZJ,ZN,ZS
CNP	Cesium Nitric Acid Recovery Process System	PTF	GV,PA,PB,PC,PF,PH,PP,PW,PX,PZ,ZF,ZH, ZJ,ZL,ZN,ZR,ZS,ZY
CRP	Cesium Resin Addition Process System	PTF	GV,PA,ZF,ZL,ZS
CXP	Cesium Ion Exchange Process System	PTF	GV,PA,PB,PF,PX,ZF,ZJ,ZL,ZS
FEP	Waste Feed Evaporation Process System	PTF	GV,PU,PW,PX,PZ,ZF,ZR,ZS
FRP	Waste Feed Receipt Process System	PTF	GV,PB,PH,PW,PX,PZ,ZF,ZL,ZN,ZS
HCP	HLW Concentrate Receipt Process System	HLW	GV,PC,PW,PX,ZF,ZS
HDH	HLW Canister Decontamination Handling System	HLW	GV,PA,PJ,ZF,ZR
HFP	HLW Melter Feed Process System	HLW	GV,PA,PB,PC,PJ,PW,ZF
HLP	HLW Lag Storage and Feed Blending Process System	PTF	GV,PC,PF,PJ,PW,PX,ZF,ZS
HMP	HLW Melter Process System	HLW	PB,ZF,ZS
HOP	Melter Offgas Treatment Process System	HLW	GV,PA,PB,PW,ZF,ZR,ZS
HPH	HLW Canister Pour Handling System	HLW	PA
LCP	LAW Concentrate Receipt Process System	LAW	GV,PB,PH,PW,ZS
LFP	LAW Melter Feed Process System	LAW	GV,PB,PE,ZH,ZS
LMP	LAW Melter Process System	LAW	PB
LOP	LAW Primary Offgas Process System	LAW	GV,PU,PW,ZR,ZS
LVP	LAW Secondary Offgas/Vessel Vent Process System	LAW	GV,PW,ZF,ZS,ZY
PJV	Pulse Jet Ventilation System	HLW, PTF	GV,PU,PV,PW,ZF,ZS,ZY
PVP	Pretreatment Vessel Vent Process System	PTF	GV,PA,PH,PS,PU,PW,PZ,ZF,ZS,ZY
PWD	Plant Wash and Disposal System	HLW, PTF	GV,PA,PH,PX,PZ,ZF,ZH,ZJ,ZN,ZR,ZS,ZY
RDP	Spent Resin Collection and Dewatering Process System	PTF	GV,PA,ZF,ZL,ZS
RLD	Radioactive Liquid Waste Disposal System	LAB, LAW, HLW, PTF	GV,PA,PB,PC,PR,PV,PW,ZF,ZH,ZJ,ZL, ZN,ZR,ZS,ZY
TCP	Treated LAW Concentrate Storage Process System	PTF	GV,PA,PB,PH,PW,PX,ZF,ZR,ZS
TLP	Treated LAW Evaporation Process System	PTF	GV,PA,PB,PH,PU,PW,PZ,ZF,ZJ,ZR,ZS
UFP	Ultrafiltration Process System	PTF	GV,PB,PP,PW,PX,PZ,ZF,ZH,ZS

Table 3 Base Material and Weld Filler Metal Composition Requirements (Wt %)

MATERIAL	Cr	Ni	Mo	Cu	W	Notes
304L BM	18.0 - 20.0	8.0 - 12.0	---	---	---	
308L WFM	19.5 - 22.0	9.0 - 11.0	0.75 max	---	---	E/ER308L & LT
304L Welds	18.0 - 22.0	8.0 - 12.0	0.75 max	---	---	Note 1
304L BM	18.0 - 20.0	8.0 - 12.0	---	---	---	
308L WFM	19.5 - 22.0	9.0 - 11.0	0.75 max	---	---	E/ER308L & LT
CD4MCu BM	24.5 - 26.5	4.75 – 6.0	1.75 – 2.25	2.75 – 3.25	---	
304L/CD4MCu welds	18.0 - 26.5	4.75 – 12.0	2.0 max	---	---	Note 1
316L BM	16.0 - 18.0	10.0 - 16.0	2.0 - 3.0	---	---	
316L WFM	17.0 - 20.0	11.0 - 14.0	2.0 - 3.0	---	---	E/ER316L & LT
316L Welds	16.0 - 20.0	10.0 - 16.0	2.0 - 3.0	---	---	Note 1
316L BM	16.0 - 18.0	10.0 - 14.0	2.0 - 3.0	---	---	
316L WFM	17.0 - 20.0	11.0 - 14.0	2.0 - 3.0	---	---	E/ER316L & LT
CD4MCu BM	24.5 - 26.5	4.75 – 6.0	1.75 – 2.25	2.75 – 3.25	---	
316L/CD4MCu welds	16.0 – 26.5	4.75 – 16.0	1.75 – 3.0	---	---	Note 1
AL6XN BM	20.0 - 22.0	23.5 - 25.5	6.0 - 7.0	0.75 max	---	
625 WFM	20.0 - 23.0	55.0 min	8.0 - 10.0	0.50 max	---	E/ERNiCrMo-3
AL6XN Welds	20.0 - 23.0	25.5 min	7.0 - 10.0	0.75 max	---	Note 2
C-22 BM	20.0 - 22.5	Remainder	12.5 - 14.5	---	2.5 - 3.5	
C-22 WFM	20.0 - 22.5	Remainder	12.5 - 14.5	0.5 max	2.5 - 4.5	E/ERNiCrMo-10
C-22 Welds	20.0 - 22.5	52.0 min	12.5 - 14.5	---	2.5 - 4.5	Note 1

BM = Base metal; WFM = Weld filler metal

Notes:

1. Acceptance is based on the combined base metal and WFM spec requirements.
2. Acceptance is based on WFM spec and the expected amount of dilution for molybdenum.

8 Design Changes Incorporated by Reference

24590-WTP-SDDR-PROC-02-0124
24590-WTP-SDDR-PROC-03-0249
24590-WTP-SDDR-PROC-03-0267
24590-WTP-SDDR-PROC-03-0282
24590-WTP-SDDR-PROC-03-0306
24590-WTP-SDDR-PROC-03-0369
24590-WTP-SDDR-PROC-03-0453
24590-WTP-SDDR-PROC-04-00152

24590-WTP-SDDR-PROC-04-00183
24590-WTP-SDDR-PROC-04-00399*
24590-WTP-SDDR-PROC-04-00410*
24590-WTP-SDDR-PROC-04-00743*
24590-WTP-SDDR-PROC-04-00896*
24590-WTP-SDDR-PROC-05-00031*
24590-WTP-SDDR-PROC-05-00520*
24590-WTP-SDDR-PROC-05-00606*
24590-WTP-SDDR-PL-05-00004*
24590-WTP-SDDR-~~ML~~M-05-00055*

9/16/05

* new

R10421869

ISSUED BY
RPP-WTP PDC

RIVER PROTECTION PROJECT – WASTE TREATMENT PLANT

ENGINEERING SPECIFICATION

FOR

Maintenance Decontamination Equipment

PHILIP MALCOLM SNIDER
STATE OF WASHINGTON
37520
REGISTERED
PROFESSIONAL ENGINEER

EXPIRES: 01/13/06

THIS DOCUMENT CONTAINS A TOTAL OF 42 SHEETS.

Philip Snider 11-11-04

Content applicable to ALARA? ☒ **Yes** ☐ **No**

ADR No. N/A **Rev**

NOTE: Contents of this document are Dangerous Waste Permit affecting.

Quality Designator
CM
DOE Contract No. DE-AC27-01RV14136

REV	DATE	REASON FOR REVISION	BY	CHECK	REVIEW	QA	APEM/DEM
0	11/11/04	Issued for Permitting Use	[signature]	[signature]	[signature]	N/A	[signature]

SPECIFICATION No. 24590-WTP-3PS-HD00-TP001 **Rev** 0

Notice

Please note that source, special nuclear, and byproduct materials, as defined in the Atomic Energy Act of 1954 (AEA), are regulated at the US Department of Energy (DOE) facilities exclusively by DOE acting pursuant to its AEA authority. DOE asserts, that pursuant to the AEA, it has sole and exclusive responsibility and authority to regulate source, special nuclear, and byproduct materials at DOE-owned nuclear facilities. Information contained herein on radionuclides is provided for process description purposes only.

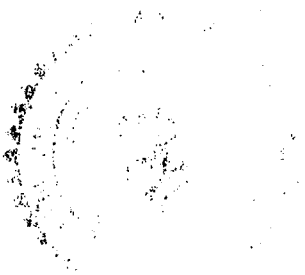

Contents

1 Scope 1
1.1 Project Description and Location 1
1.2 Equipment, Material, and Services Required 1
1.3 Subcontract Work 4
1.4 Definitions, Acronyms and Abbreviations 4
1.5 Quality Classifications 6
2 Applicable Documents 6
2.1 General 6
2.2 Codes 6
2.3 Industry Standards 7
2.4 Project Documents 8
2.5 WTP Drawings 9
3 Design Requirements 9
3.1 General Criteria 9
3.2 Basic Requirements of Decontamination Booths and Gloveboxes 10
3.3 Basic Requirements of Decontamination Tanks 10
3.4 Basic Requirements of PTF Decon Tanks 12
3.5 Basic Requirements of Spray Lances 12
3.6 Basic Requirements of Decontamination Blast and Spray Equipment 12
3.7 Basic Requirements of Crane Decontamination Equipment 12
3.8 Basic Requirements of Parts Washer 13
3.9 Features of Decontamination Booths and Gloveboxes 13
3.10 Features of HLW Decontamination Tanks and Spray System 14
3.11 Major features of the PTF Decon Tank include, but are not limited to: 17
3.12 Design Life 17
3.13 Environmental Conditions 17
3.14 Mechanical Requirements For Decontamination Booths and Gloveboxes 17
3.15 Mechanical Requirements For Decontamination Tanks 18
3.16 Mechanical Requirements For Spray Lances 18
3.17 Mechanical Requirements For Decontamination Blast and Spray Equipment 18
3.18 Mechanical Requirements For Crane Decontamination Equipment 18
3.19 Seismic Loading 19
3.20 Electrical Requirements 19

3.21 Accessibility and Maintenance 19
4 Materials 20
4.1 Construction 20
4.2 Spray Lances 21
4.3 Equipment Subject to Radiation: 21
4.4 Prohibited Materials 21
5 Fabrication 21
5.1 General 21
5.2 Decontamination Tanks 22
5.3 Crane Decontamination Equipment 24
6 Tests and Inspections 25
6.1 General 25
6.2 Decontamination Booths and Gloveboxes 26
6.3 Decontamination Tanks and Spray System 26
6.4 Spray Lances 28
6.5 Decontamination Blast or Spray Equipment 28
6.6 Crane Decontamination Equipment 28
6.7 Parts Washer 28
7 Preparation for Shipment 28
7.1 General 28
7.2 Surface Preparation 29
7.3 Painting and Coatings 29
7.4 Tagging 29
7.5 Packaging 29
7.6 Documentation 30
8 Quality Assurance 30
8.1 QA Requirements Specific to Items or Services 30
8.2 Program QA Elements 31
9 Configuration Management 31
9.1 General 31
9.2 Meeting Minutes 31
9.3 Design Compliance Matrix 31
9.4 Submittals 31
9.5 Quality Assurance Plan 32
9.6 Drawings 32

9.7 Design Reviews and Meetings 32
9.8 Procedures 34
9.9 Manuals 34

Appendices

Appendix A : A-1
Appendix B : Equipment Plant Item Numbers and Datasheet Numbers B-1

1 Scope

1.1 Project Description and Location

Decontamination equipment will be used in four facilities: High Level Waste (HLW), Low Activity Waste (LAW), the Pre-Treatment Facility (PTF), and the Analytical Laboratory (LAB). Decontamination entails the removal of unwanted radiological fixed and loose surface contaminants using various mechanical and chemical processes. Gloveboxes provide containment for manual methods of decontaminating smaller parts prior to repair. Decontamination booths provide containment allowing decontamination of larger pieces of equipment. Tanks and spray systems will accommodate in-cell decontamination of large equipment. Spray lances will be provided through-wall in strategic locations to decontaminate equipment using liquid spray or CO2 blasting methods. Spray lances will also be used inside gloveboxes and decontamination booths. Portable decontamination spray or blast supply equipment will deliver the decontamination media to lances for decontaminating plant equipment. Joggle plugs (by others) will be provided for through wall penetrations of spray and blast unit hoses, to maintain the radiological boundary and allow for future process changes and spraying equipment removal and replacement from out cell. Other miscellaneous decontamination equipment includes parts washers and a crane decontamination system.

1.2 Equipment, Material, and Services Required

The Seller shall provide all materials, hardware and labor to design, fabricate, assemble, inspect, functionally test, document and package the listed equipment as provided in this specification, other applicable drawings or documentation referenced.

Mandatory technical requirements and design constraints are typically indicated on data sheets, drawings and specifications by use of terms such as "shall", "required", "mandatory", "maximum", "minimum", or "not to exceed", or by other use of notes. Examples of mandatory technical requirements are dimensions and their associated tolerances, bounding locations of center of gravity (CG) or estimated weight not to be exceeded.

Seller scope of work includes, but is not limited to:

- Seller shall be responsible for the technical adequacy of the design furnished, including constructability, reliability, operability, and maintainability.
- Equipment fabricated and assembled in compliance with this specification, and the referenced codes and standards
- Examination/inspection
- Packaging and preparation for shipping
- Submittals as identified in this specification and summarized on G321-E and G321-V forms.
- Providing the Buyer full access to the Seller's facility for performing inspections or surveillance of any work performed within the scope of the contract
- Installation, Operation, and Maintenance Manuals
- Supporting calculations and analyses, when defined

- Any special tools or handling equipment required for assembly, erecting, maintenance, or disassembly of the gloveboxes, decontamination booths, or other deliverable equipment
- Factory acceptance testing where required
- Loading of equipment on Buyer-arranged conveyances.
- Field support for installation and testing, when required.

The Seller shall submit parts lists and costs for equipment summarized in the G321-E form.

Referenced Design Proposal Drawing (DPD) listed in section 2.5, Mechanical Data Sheets (MDS) listed in Appendix B, and Technical Specification lists details and other requirements of deliverable equipment.

The following deliverable equipment is included within the Seller's scope of work:

Decontamination Tanks

DOCUMENT NUMBER	DESCRIPTION	PLANT ITEM NUMBER
24590-HLW-M0-HSH-00071	DPD, HSH Decontamination Tank Assembly, Melter 1	24590-HLW-MT-HSH-TK-00001
24590-HLW-M0-HSH-00074	DPD, Decontamination Tank Pump Support Package, Melter 1	24590-HLW-MT-HSH-TK-00003
24590-HLW-M0-HSH-00071	DPD, HSH Decontamination Tank Assembly, Melter 2	24590-HLW-MT-HSH-TK-00002
24590-HLW-M0-HSH-00074	DPD, Decontamination Tank Pump Support Package, Melter 2	24590-HLW-MT-HSH-TK-00004
24590-PTF-M0D-PIH-00015	MDS, PTF Decon Tank at PIH	24590-PTF-MT-PIH-TK-00001
24590-PTF-M0-PIH-00019	DPD, PTF Decon Tank at PIH	24590-PTF-MT-PIH-TK-00001

Booths and Gloveboxes

DOCUMENT NUMBER	DESCRIPTION	PLANT ITEM NUMBER
24590-PTF-M0-M17T-00001	PTF Maintenance Decontamination Booth	24590-WTP-MH-10-MHAN-00004
24590-PTF-M0-M10T-00051	PTF Maintenance Decontamination Glovebox	24590-WTP-MH-10-MHAN-00005
24590-LAW-M0-M17T-00001	LAW Maintenance Decontamination Booth	24590-WTP-MH-20-MHAN-00004
24590-LAW-M0-M10T-00003	LAW Maintenance Decontamination Glovebox	24590-WTP-MH-20-MHAN-00005
24590-HLW-M0-M17T-00009	HLW Maintenance Decontamination Booth	24590-WTP-MH-30-MHAN-00004
24590-HLW-M0-M10T-00077	HLW Maintenance Decontamination Glovebox	24590-WTP-MH-30-MHAN-00007
24590-LAB-M0-M10T-00002	LAB Decontamination Glovebox	24590-WTP-MH-60-MHAN-00003

Miscellaneous Equipment

DOCUMENT NUMBER	DESCRIPTION	PLANT ITEM NUMBER
24590-HLW-M0-HSH-00078	Crane Decontamination System, Melter 1	24590-HLW-MH-HSH-MHAN-00011
24590-HLW-M0D-HSH-00150	Parts Washer, Melter 1	24590-HLW-MH-HSH-MHAN-00041
24590-HLW-M0-HSH-00078	Crane Decontamination System, Melter 2	24590-HLW-MH-HSH-MHAN-00055
24590-HLW-M0D-HSH-00212	Parts Washer, Melter 2	24590-HLW-MH-HSH-MHAN-00057
24590-HLW-M0D-30-00266	Pressure Washing Supply System, Unit 1	24590-HLW-30-TOOL-00028
24590-HLW-M0D-30-00267	Pressure Washing Supply System, Unit 2	24590-HLW-30-TOOL-00029
24590-PTF-M0D-M17T-00002	PTF CO2 Decontamination Blast Unit	24590-WTP-MZ-10-MAINT-00001
24590-PTF-M0D-M10T-00007	Roaming CO2 Decontamination Blast Unit	24590-WTP-MZ-10-MAINT-00002
24590-LAW-M0D-M17T-00002	LAW CO2 Decontamination Blast Unit	24590-WTP-MZ-20-MAINT-00001
24590-HLW-M0D-M17T-00017	HLW CO2 Decontamination Blast Unit	24590-WTP-MZ-30-MAINT-00002
24590-HLW-M0D-M10T-00030	Roaming CO2 Decontamination Blast Unit	24590-WTP-MZ-30-MAINT-00004
24590-LAB-M0D-M10T-00003	C3 Workshop CO2 Decontamination Blast Unit	24590-WTP-MZ-60-MAINT-00001
24590-PTF-M0D-PIH-00031	Pressure Washing Supply System, PTF Portable Unit	24590-PTF-PIH-TOOL-00037

Spray Lances

DOCUMENT NUMBER	DESCRIPTION	PLANT ITEM NUMBER
24590-HLW-M0D-HSH-00123	MDS, Maintenance Area Manual Spray Lance, Melter 1	24590-HLW-FH-HSH-TOOL-00027
24590-HLW-M0D-HSH-00124	MDS, Maintenance Area Upper Manual Spray Lance, Melter 1	24590-HLW-FH-HSH-TOOL-00028
24590-HLW-M0D-HSH-00125	MDS, Decontamination Area Manual Spray Lance, Melter 1	24590-HLW-FH-HSH-TOOL-00018
24590-HLW-M0D-HSH-00134	MDS, Decontamination Area Manual CO2 Spray Lance, Melter 1	24590-HLW-FH-HSH-TOOL-00029
24590-HLW-M0D-HSH-00137	MDS, Melter Cave Decontamination Spray Lance, Melter 1	24590-HLW-FH-HSH-TOOL-00031
24590-HLW-M0D-HSH-00126	MDS, Decontamination Pit Lower Remote Spray Lance, Melter 1	24590-HLW-FH-HSH-TOOL-00020
24590-HLW-M0D-HSH-00127	MDS, Decontamination Pit Lower Remote CO2 Spray Lance, Melter 1	24590-HLW-FH-HSH-TOOL-00022
24590-HLW-M0D-HSH-00135	MDS, Decontamination Pit Upper Remote Spray Lance, Melter 1	24590-HLW-FH-HSH-TOOL-00023
24590-HLW-M0D-HSH-00136	MDS, Melter Cave Remote CO2 Spray Lance, Melter 1	24590-HLW-FH-HSH-TOOL-00030
24590-HLW-M0D-HPH-00094	MDS, Spray Lance, Decon Area, Pour Tunnel 1H-B019A	24590-HLW-FH-HPH-TOOL-00010
24590-HLW-M0D-HSH-00217	MDS, Maintenance Area Manual Spray Lance, Melter 2	24590-HLW-FH-HSH-TOOL-00042
24590-HLW-M0D-HSH-00218	MDS, Maintenance Area Upper Manual Spray Lance, Melter 2	24590-HLW-FH-HSH-TOOL-00043
24590-HLW-M0D-HSH-00213	MDS, Decontamination Area Manual Spray Lance, Melter 2	24590-HLW-FH-HSH-TOOL-00039
24590-HLW-M0D-HSH-00219	MDS, Decontamination Area Manual CO2 Spray Lance, Melter 2	24590-HLW-FH-HSH-TOOL-00044
24590-HLW-M0D-HSH-00221	MDS, Melter Cave Decontamination Spray Lance, Melter 2	24590-HLW-FH-HSH-TOOL-00046
24590-HLW-M0D-HSH-00214	MDS, Decontamination Pit Lower Remote Spray Lance, Melter 2	24590-HLW-FH-HSH-TOOL-00040
24590-HLW-M0D-HSH-00215	MDS, Decontamination Pit Lower Remote CO2 Spray Lance, Melter 2	24590-HLW-FH-HSH-TOOL-00048
24590-HLW-M0D-HSH-00216	MDS, Decontamination Pit Upper Remote Spray Lance, Melter 2	24590-HLW-FH-HSH-TOOL-00041
24590-HLW-M0D-HSH-00220	MDS, Melter Cave Remote CO2 Spray Lance, Melter 2	24590-HLW-FH-HSH-TOOL-00045
24590-HLW-M0D-HPH-00238	MDS, Spray Lance, Bogie Decon, Pour Tunnel 2	24590-HLW-FH-HPH-TOOL-00029
24590-HLW-M0D-HPH-00093	MDS, Spray Lance, Decontamination H343 (remote)	24590-HLW-FH-HPH-TOOL-00015
24590-HLW-M0D-HRH-00018	MDS, Spray Lance, Decontamination HB045	24590-HLW-FH-HRH-TOOL-00003
24590-HLW-M0D-HDH-00043	MDS, Canister Rinse Tunnel Spray Lance (CO2)	24590-HLW-FH-HDH-TOOL-00006
24590-HLW-M0D-HDH-00044	MDS, Canister Rinse Bogie Spray Lance	24590-HLW-FH-HDH-TOOL-00007
24590-HLW-M0D-HMH-00002	MDS, Decon Spray Lance (Air Lock Melter Sump 1)	24590-HLW-FH-HMH-TOOL-00001
24590-HLW-M0D-HMH-00003	MDS, Decon Spray Lance (Air Lock Melter Sump 2)	24590-HLW-FH-HMH-TOOL-00002
24590-HLW-M0D-HFH-00045	MDS, Power Manipulator Spray Lance (water)	24590-HLW-FH-HFH-TOOL-00010
24590-HLW-M0D-HFH-00046	MDS, Power Manipulator Spray Lance (CO2)	24590-HLW-FH-HFH-TOOL-00013
24590-HLW-M0D-RWH-00077	MDS, Spray Lance, Remote (CO2)	24590-HLW-FH-RWH-TOOL-00019
24590-HLW-M0D-RWH-00044	MDS, Spray Lance, Manual (CO2)	24590-HLW-FH-RWH-TOOL-00022
24590-HLW-M0D-RWH-00043	MDS, Spray Lance, Remote (liquid)	24590-HLW-FH-RWH-TOOL-00020
24590-PTF-M0D-PFH-00030	MDS, Crane Decon Manual CO2 Spray Lance	24590-PTF-FH-PFH-TOOL-00017
24590-PTF-M0D-PFH-00028	MDS, Decontamination Chamber Remote CO2 Spray Lance	24590-PTF-FH-PFH-TOOL-00015
24590-PTF-M0D-PIH-00014	MDS, Maintenance Area Remote CO2 Spray Lance	24590-PTF-FH-PIH-TOOL-00024
24590-PTF-M0D-RWH-00065	MDS, Spray Lance, P-0121A	24590-PTF-FH-RWH-TOOL-00016
24590-PTF-M0D-RWH-00066	MDS, Spray Lance, P-0122A	24590-PTF-FH-RWH-TOOL-00017
24590-PTF-M0D-RWH-00067	MDS, Spray Lance, P-0223	24590-PTF-FH-RWH-TOOL-00018
24590-PTF-M0D-PIH-00026	MDS, Low Pressure Spray Lance, Maintenance Cave Area	24590-PTF-FH-PIH-TOOL-00028
24590-PTF-M0D-PIH-00027	MDS High Pressure Spray Lance, Maintenance Cave Area	24590-PTF-FH-PIH-TOOL-00026
24590-PTF-M0D-PIH-00028	MDS, Low Pressure Spray Lance, Maintenance Cave Area	24590-PTF-FH-PIH-TOOL-00027
24590-PTF-M0D-PWD-00001	MDS, Low Pressure Spray Lance, Hot Cell Area	24590-PTF-FH-PWD-TOOL-00001
24590-PTF-M0D-PWD-00002	MDS, Low Pressure Spray Lance, Hot Cell Area	24590-PTF-FH-PWD-TOOL-00002
24590-PTF-M0D-PWD-00003	MDS, Low Pressure Spray Lance, Hot Cell Area	24590-PTF-FH-PWD-TOOL-00003
24590-PTF-M0D-PWD-00004	MDS, Low Pressure Spray Lance, Hot Cell Area	24590-PTF-FH-PWD-TOOL-00004
24590-PTF-M0D-PWD-00005	MDS, Low Pressure Spray Lance, Hot Cell Area	24590-PTF-FH-PWD-TOOL-00005
24590-PTF-M0D-PWD-00006	MDS, Low Pressure Spray Lance, Hot Cell Area	24590-PTF-FH-PWD-TOOL-00006
24590-PTF-M0D-PWD-00007	MDS, Low Pressure Spray Lance, Hot Cell Area	24590-PTF-FH-PWD-TOOL-00007
24590-PTF-M0D-PWD-00008	MDS, Low Pressure Spray Lance, Hot Cell Area	24590-PTF-FH-PWD-TOOL-00008
24590-PTF-M0D-PWD-00009	MDS, Low Pressure Spray Lance, Hot Cell Area	24590-PTF-FH-PWD-TOOL-00009
24590-PTF-M0D-PWD-00010	MDS, Low Pressure Spray Lance, Hot Cell Area	24590-PTF-FH-PWD-TOOL-00010
24590-PTF-M0D-PWD-00011	MDS, Low Pressure Spray Lance, P-0119	24590-PTF-FH-PWD-TOOL-00011
24590-PTF-M0D-PFH-00039	MDS, Spray Lance, Remote H2O	24590-PTF-FH-PFH-TOOL-00016

The following items and services, not included in the Seller's scope of work, will be supplied by the Buyer:

- Transportation of products to the jobsite; refer to Section 7 of the purchase order for the Seller's requirements pertaining to packaging and shipping.
- Unloading, storage, installation and field-testing at the jobsite, except where Seller's assistance is required.
- Field installation of fire protection in gloveboxes and decontamination booths
- Embed plates, joggle plugs, and through wall liners
- Exhaust Ventilation equipment for gloveboxes and decontamination booths, (including HEPA filters and ducting). Exhaust demisters are within Seller's scope and shall be supplied by the Seller.
- Two ton hoist for decontamination booths
- Jumper nozzles for decontamination tank piping when specified
- Electrical and instrumentation jumpers for wiring when specified

1.3 Subcontract Work

The Seller may subcontract any portion of the design, fabrication, or assembly provided it meets the quality assurance requirements of this specification. Unless specified otherwise, the Seller is responsible for performance of all inspections and testing, including receipt and control of raw material through fabrication, testing, and configuration control to assure conformance with the requirements stated within in this specification. The subcontractor and subcontracted work shall be reviewed by the Buyer prior to starting the work. The Seller will be ultimately responsible for the completeness and quality of all materials included in this specification.

1.4 Definitions, Acronyms and Abbreviations

Glovebox	The Glovebox is a mechanism used for the containment of contaminated equipment during decontamination and repair.
Shall	Indicates a mandatory requirement for all actions of the Seller
AFBMA	Anti-Friction Bearing Manufacturers Association
AGS	American Glovebox Society
ANSI	American National Standard Institute
ASME	American Society of Mechanical Engineers
ASNT	American Society for Non-Destructive Testing
ASTM	American Society for Testing and Materials
AWS	American Welding Society
CFR	Code of Federal Regulations
DPD	Design Proposal Drawing

HEPA	High Efficiency Particulate Air
HLW	High Level Waste
ILAW	Immobilized Low Active Waste
ITS	Important to Safety
LAW	Low Active Waste
LAB	Analytical Laboratory
MDS	Mechanical Data Sheet – Design document that describes equipment specific requirements and conditions.
MSDS	Material Safety Data Sheet
MSM	Master Slave Manipulator
MR	Material Requisition
NACE	National Association of Corrosion Engineers
NEC	National Electric Code
NDE	Non-destructive Examination
NEMA	National Electrical Manufacturers Association
NFPA	National Fire Protection Association
OSHA	Occupational Safety and Health Administration
P&ID	Piping and Instrumentation Diagram
PIL	Plant Item List
PQR	Procedure Qualification Record
PTF	Pre-Treatment Facility
QL	Quality Level
QAP	Quality Assurance Program
RPP-WTP	River Protection Project – Waste Treatment Plant
SSC	Structure, System or Component
SSPC	Steel Structures Painting Council
UBC	Uniform Building Code
USCS	U.S. Customary System "inch-pound system"
UNC	Unified National Coarse
WPS	Welding Procedure Specification
w.g.	Water gauge
CG	Center of Gravity
RRC	Risk Reduction Class
CM	Commercial

SC	Seismic Category
PV	Pressure Vessel
RTD	Resistance Temperature Detector
VT	Visual Inspection

1.5 Quality Classifications

1.5.1 General

All equipment shall be purchased as Commercial Quality equipment.

For Quality Assurance requirements refer to Section 8 of this specification.

2 Applicable Documents

2.1 General

Work shall be done in accordance with the referenced codes, standards, and documents listed below, which are an integral part of this specification. If the Seller determines other documents, than those listed, are applicable, the Seller shall refer those documents to the Buyer for evaluating the applicability to the specific component or equipment.

When specific chapters, sections, parts, or paragraphs are listed following a code, industry standard, or reference document, only those chapters, sections, parts, or paragraphs of the document are applicable and shall be applied. When more than one code, standard, or reference document covers the same topic, the requirements for all must be met.

For codes and standards listed below, the specific revision or effective date identified, as well as the specific revision or effective date of codes and standards that they incorporate by reference (daughter codes and standards), shall be followed. If a date or revision is not identified, the last issue, including addenda, at the time of quotation shall apply.

Any known conflicts between the specification or drawings, and the applicable codes and standards, shall be brought to the attention of the Buyer, via a Supplier Deviation Disposition Request (SDDR), for resolution prior to start of work. A blank SDDR form can be found in Section 2.5 of the MR.

The document revision in effect at the time of contract award shall govern, unless specified otherwise. The use of any other edition, revision, or issue of a reference document requires Buyer's approval.

2.2 Codes

NEC (NFPA 70)	National Electric Code
DOE-STD-1066-97, (Chapter 15)	Fire Protection Design Criteria, Glovebox Fire Protection
DOE Order 0 414.1A, 9/29/99	Quality Assurance
NFPA 801, Section 7.4	Standard for Fire Protection for Facilities

Handling Radioactive Materials, 2003 Edition

2.3 Industry Standards

2.3.1 Occupational Health & Safety Administration (OHSA)

29 CFR 1910.23	Guarding Floor and Wall Opening and Holes

2.3.2 American Glovebox Society

AGS-G001	Guideline for Gloveboxes, 1998

2.3.3 American National Standard Institute (ANSI)/American Welding Society (AWS)

ANSI/AWS D1.1	Structural Welding Code – Steel
ANSI/AWS D1.6	Structural Welding Code - Stainless Steel
ANSI/AWS D9.1	Sheet Metal Welding Code

2.3.4 American Petroleum Institute (API)

API 620	Design and Construction of Large, Welded, Low Pressure Storage Tanks, 10th edition, Feb. 1, 2002

2.3.5 American Society of Mechanical Engineers (ASME)

ASME B31.3	Process Piping, 1996
ASME Y14.5M	Dimensioning and Tolerancing

2.3.6 American Society for Nondestructive Testing (ASNT)

SNT-TC-1A	Recommended Practice No. SNT-TC-1A Personnel Qualification and Certification in Nondestructive Testing, 1980

2.3.7 International Electrotechnical Commission (IEC)

IEC 60529	Degrees of Protection Provided by Enclosures

2.3.8 Underwriters Laboratory (UL)

UL 1776	High Pressure Cleaning Machine

2.3.9 Steel Structures Painting Council (SSPC)

SSPC-SP1	Solvent Cleaning

2.3.10 Pipe Fabrication Institute (PFI)

ES-24	Pipe Bending Methods, Tolerances, Processes and Material Requirements

2.4 Project Documents

The document revision in the associated MR (Material Requisition)/PO package documents shall govern.

The following is a list of other WTP specifications that have been invoked by WTP specifications referenced, or their subsequent daughter specifications that may not have been specifically listed:

- *Engineering Specification for Packaging, Handling, and Storage Requirement,* 24590-WTP-3PS-G000-T0003.
- *General Specification for Supplier Quality Assurance Program Requirements,* 24590-WTP-3PS-G000-T0001.
- *General Specification for Mechanical Handling Equipment Design and Manufacture,* 24590-WTP-3PS-M000-T0002.
- *Engineering Specification for Instrumentation for Package Systems,* 24590-WTP-3PS-JQ07-T0001
- *Engineering Specification for Electrical Requirements for Packaged Equipment,* 24590-WTP-3PS-EKP0-T0001.
- *Specification for Tank Welding,* 24590-WTP-3PS-MTSS-T0001.
- *Engineering Specification for Welding of Structural Stainless Steel and Welding of Structural Carbon Steel to Structural Stainless Steel,* 24590-WTP-3PS-SS00-T0002.
- *Engineering Specification for Structural Design Loads for Seismic Category III & IV Equipment and Tanks,* 24590-WTP-3PS-FB01-TP001.
- *Piping Material Class Description,* 24590-WTP-PER-PL-02-001.
- *Piping Material Classification, Pipe Class S11B,* 24590-WTP-3PB-P000-TS11B.
- *Engineering Specification for Pressure Vessel Design and Fabrication,* 24590-WTP-3PS-MV00-TP001.
- *Engineering Specification for Welding of Carbon Structural Steel,* 24590-WTP-3PS-SS00-T0001.
- *Engineering Specification for Positive Material Identification,* 24590-WTP-3PS-G000-TP002.
- Technical Supply Condition for Valves, 24590-WTP-3PS-PV00-T0001.
- *Engineering Specification for Shop Fabrication of Piping,* 24590-WTP-3PS-PS02-TP001.
- *Engineering Specification for Actuators for ON/OFF Valves,* 24590-WTP-3PS-JV15-T0001
- *Engineering Specification for Shop Applied Special Protective Coatings to Steel Items and Equipment,* 24590-WTP-3PS-AFPS-T0001

2.5 WTP Drawings

The document revision listed in the MR package for WTP documents shall govern.

2.5.1 Design Proposal Drawings

2.5.1.1 Decontamination Booths and Gloveboxes

Document Number	Document Description
24590-PTF-M0-M17T-00001	PTF Maintenance Decontamination Booth
24590-PTF-M0-M10T-00051	PTF Maintenance Decontamination Glovebox
24590-LAW-M0-M17T-00001	LAW Maintenance Decontamination Booth
24590-LAW-M0-M10T-00003	LAW Maintenance Decontamination Glovebox
24590-HLW-M0-M17T-00009	HLW Maintenance Decontamination Booth
24590-HLW-M0-M10T-00077	HLW Maintenance Decontamination Glovebox
24590-LAB-M0-M10T-00002	LAB Maintenance Decontamination Glovebox

2.5.1.2 Decontamination Tanks and Spray System

Document Number	Document Description
24590-HLW-M0-HSH- 00071	HSH Decontamination Tank Assembly
24590-HLW-M0-HSH- P0072	Decontamination Tank
24590-HLW-M0-HSH- 00073	Decontamination Tank Spray and Sparge System
24590-HLW-M0-HSH- 00074	Decontamination Tank Pump Support Package
24590-HLW-M0-HSH-P0075	Decontamination Tank Process Flow Diagram
24590-HLW-M0-HSH- 00076	Decontamination Tank Discharge Filter Assembly
24590-HLW-M0-HSH- 00077	Decontamination Tank Drip Pan
24590-PTF-M0-PIH-00019001	PTF Decon Tank at PIH
24590-PTF-M0-PIH-00019002	PTF Decon Tank at PIH

2.5.1.3 Miscellaneous Decontamination Equipment

Document Number	Document Description
24590-HLW-M0-HSH- 00078	Crane Decontamination System

3 Design Requirements

3.1 General Criteria

It is not the intent to specify herein all details of design and construction. It shall be the responsibility of the Seller to supply equipment that has been designed and fabricated in accordance with specified codes and standards, and to apply a standard of workmanship suitable

for the intended purpose. Buyer weight and CG calculations are preliminary and bounding for Buyer's civil/structural use only. Seller shall provide weight and CG calculations and mark deliverable equipment when specified, as noted on associated DPDs.

3.2 Basic Requirements of Decontamination Booths and Gloveboxes

The Seller shall furnish the gloveboxes and decontamination booths complete with required auxiliary systems, instruments, and safety devices to provide efficient and safe operations. This shall include, but is not limited to the following:

- Maximum bounding weight is 2,718 lb. for LAW, HLW and PTF gloveboxes and 20,375 lb. for decontamination booths. The LAB Glovebox bounding weight is 6,000 lb. The LAB Glovebox Platform bounding weight is 5,264 lb.
- Provide required shielding when specified as material thickness on DPDs.
- Provide a means for passing manual swab samples outside the glovebox and decontamination booth.
- The glovebox and decontamination booth lighting shall be external and fluorescent.

Decontamination Booth and Glovebox Seismic Criteria is SC III. The Safety Class is "Not Important to Safety".

3.2.1 Shielding Requirements

For all material thickness requirements refer to the glovebox and decontamination booth DPD listed in Section 2.5.1. Material thickness specified shall be considered minimum.

Recessed areas or internal pockets shall not reduce the required minimum shielding thickness of the glovebox.

3.3 Basic Requirements of Decontamination Tanks

The tank shall be designed and fabricated in accordance with API 620 and 24590-WTP-3PS-MTSS-T0001. The tank shall not be a stamped vessel. Tank piping nozzle loads, nozzle reinforcing and nozzle orientation for jumpers shall be in accordance with 24590-WTP-3PS-MV00-TP001, Section 3, *Pressure Vessel Design and Fabrication.*

Process piping shall be designed in accordance with the applicable requirements identified in ASME B31.3 and project specification 24590-WTP-3PS-P000-T0001, *Engineering Specification for Piping Material Classes.* The piping material class for interfacing to the Buyer provided jumper piping shall be in accordance with 24590-WTP-3PB-P000-TS11B, *Piping Material Classification, Pipe Class* S11B. Piping fabrication shall be in accordance with 24590-WTP-3PS-PS02-TP001, *Engineering Specification for Shop Fabrication of Piping.*

Seller shall consider design details and material thickness shown on Drawings as the minimum requirements. Seller shall not scale Drawings.

The decontamination tanks shall have a quality level of "CM", (commercial). The safety class is "RRC". The Seismic Criteria is "SC-III".

Local gamma dose rates in the general area of each decontamination tank shall be 10,000 mrad/hr maximum. Neutron dose rates are negligible.

The temperatures in the rooms housing the decontamination tanks shall be 59°F minimum and 95°F maximum; humidity varies between 5% and 100%. Operating temperatures controls for each tank shall be capable of being set and maintained at selected temperatures between 59°F and 240°F.

The chemical delivery and control system (HLW tanks only) shall be designed in accordance to the Pump Support Package DPD (24590-HLW-M0-HSH-00074) and process flow diagram (24590-HLW-M0-HSH-00075). The pump support package shall have a structural frame and stainless steel sheet metal cover. The frame shall provide sufficient rigidity to achieve and maintain illustrated tolerances throughout the working lifetime of the tank. The sheet metal cover shall provide lance overspray, drip and splash protection of internal components and provide a means of pump heat rejection. The requirements of the pump support package include, but are not limited to:

- Tank heating and agitation using steam sparging
- Tank agitation using air sparging
- High volume, high pressure spray
- Injection of chemicals
- Recirculation of fluids
- Neutralization of chemicals
- Sample waste stream
- Transfer of fluids from the tank to radioactive waste disposal system
- Remote disassembly

The Decontamination Tank Spray and Sparge System (HLW tanks only) primary function is to:

- Provide a support structure to deliver and disperse sprays at predetermined levels
- Protect the tank shell from physical damage due to contact with items being cleaned
- Provide a stepped support structure for templates suspending items for cleaning. The maximum suspended load, including tooling (by Buyer) shall not exceed 8,000 lb.

The Decontamination Tank Spray System shall have tested and documented performance provided before shipment. All spray ring nozzles shall be of the flat fan type with low spray angles to maximize impact. The fan of each nozzle shall be oriented vertically with nozzles pointing up , down, and radially inward as required to provide full coverage on a 12" diameter cylinder, throughout the height of the tank. Cleaning configuration 1 is the top ring operating alone with nozzles pointing downward, arranged to preclude spray from exiting the tank. Configuration 2 is the middle pair operating together with nozzles pointing up, down, and radially inward. Configuration 3 is the bottom pair of rings operating together similar to the middle pair, however, the bottom ring shall have no downward pointing nozzles. The Seller shall submit the nozzle type, spray angle, orifice size, operating pressure and flow rates in the above configurations and the expected impact in pounds per square inch on the 12" diameter cylinder stated above.

3.4 Basic Requirements of PTF Decon Tanks

The Pre-treatment Decon Tank (24590-PTF-M0D-PIH-00015 and 24590-PTF-M0-PIH-00019) requirements include, but are not limited to:

- Remote disassembly
- Transfer of fluids from the tank to radioactive waste disposal system

3.5 Basic Requirements of Spray Lances

The Seller shall provide spray lances with all hosing and connections necessary for mechanical and chemical decontamination. This shall include, but is not limited to the following:

- Provide lances compatible with facility equipment such as master slave manipulators (MSMs), power manipulators, and decontamination booths or gloveboxes per listed DPD or datasheet
- Provide compatibility with mechanical spray or blast equipment as well as chemical decontamination
- Provide construction and materials suitable for decontamination of the spray lance
- Provide lances with manually operated controls per datasheet

3.6 Basic Requirements of Decontamination Blast and Spray Equipment

The Seller shall provide decontamination blast and spray equipment for decontamination of plant structures and equipment. This shall include, but is not limited to the following:

- Provide compatibility with spray lance
- Provide remote operation compatibility with a foot pedal per datasheet
- Provide remote operation with all safety features inherent in a handheld spray lance
- Provide portability to move around the plant
- Provide compatibility with the chemicals listed on the Mechanical Data Sheet
- Provide pressure washers that are UL listed

3.7 Basic Requirements of Crane Decontamination Equipment

The crane decontamination equipment (24590-HLW-M0-HSH-00078) is used to decontaminate the exterior of the overhead crane, the overhead mast mounted power manipulator or the interior telescopic mast of power manipulator. The decontamination equipment shall hang from the overhead crane with a bail and direct a nozzle at the manipulator, mast or the crane above. The equipment shall be compatible with liquid spray lances and CO_2 pellet lances and capable of being remotely assembled or disassembled, using MSM or the Power Manipulator hand. The nozzle shall be remotely adjustable with the number of desired angles shown on the design proposal drawing. The lances shall be compatible with the pressure washers or CO_2 blast units described in this technical specification. The Seller shall allow for additional weight to be added. The lance angle shall be remotely adjustable with a power manipulator or MSM. Two hose reel and skid combinations shall be included with the crane decontamination equipment. The skid shall provide additional weight necessary for long payout of hose and remote connection of hoses to a spray lance, the crane decontamination equipment, or when attached directly to the spray manifold on the power manipulator for internal mast decontamination. One hose reel shall be for

CO_2 and the other shall be for liquid. The hose reels shall be handled remotely. The flow shall be restricted when a hose fails to prevent whipping, and protected from excess flow using a 10 gpm orifice.

The crane decontamination equipment shall have a quality level of "CM". The safety class is "Not Important to Safety". The Seismic Criteria is "SC-V".

3.8 Basic Requirements of Parts Washer

The parts washer (24590-HLW-M0D-HSH-00150 and 24590-HLW-M0D-HSH-00212) shall spray and soak equipment for cleaning and decontamination. The washer shall be operated manually or remotely using the power manipulator. The drain and fill valves shall be capable of being operated manually and remotely. Drain, fill, and recirculation functions shall be full automated for remote operation, but have the capabilities for local manual operation.

3.9 Features of Decontamination Booths and Gloveboxes

Refer to Design Proposal Drawings listed in Section 2.5.1.

The gloveboxes and decontamination booths are fastened to the floor embeds. Other than material thickness specified on DPD, the gloveboxes will not require any additional shielding for shielding purposes (see Section 3.2.1). The glovebox components are operated manually. The decontamination booth and glovebox shall have a sloped floor in the bottom draining into a sump provided by the Seller. The sump shall be drained through a 2 in. nominal pipe stub-out. The stub-out shall be pre-filtered with a minimum screen open area of 3.5 $in.^2$ with a maximum of ¼ in. square clear openings. The screen shall withstand a flow of 25 gallons/min. Fire protection hardware is the responsibility of the Buyer's fire protection contractor. The Seller is required to coordinate design interfaces for the fire protection system with the Buyer's fire protection contractor. Coordination shall occur as part of the detail design.

Other features are noted as follows:

- The ports require metal hatch covers
- The gloveports shall be of the quick change style that allows for timely conversion to pass-through ports
- The glove material shall be specified by the Seller, see AGS-G001-1998.
- The decontamination booth shall have a two ton manually operated turntable.
- The turntable shall be manually operated with a shaft through the wall of the decontamination booth and a crank on the outside at the operating station.
- The decontamination booth shall have a W 10 × 19 monorail beam for a 2 ton chain hoist
- The decontamination booth shall have an Exhaust demister
- Provide grilles (or screens) on the exhaust plenum on each of the three Gloveboxes and three Booths.
- Provide HEPA filters with counterbalanced backdraft dampers on the inbleeds into the airlock portion of the three Decontamination Booths. Provide HEPA filters

between the airlock portion and the work-center portion. Provide counterbalanced Backdraft Dampers with each of the three Glovebox inbleeds.

- Provide 8" to 10" dia. emergency exhaust flanges and inbleed filter housings with each Decontamination Booth and Glovebox.
- Provide a leak-tight seal on the inner air lock doors on the three Decontamination Booths.
- Provide a flange and removable end plate on the inbleed portion of each of the three Gloveboxes.
- Provide a flanged horizontal exhaust tee on the LAB Glovebox exhaust centered at 117" above the floor. The south facing outlet shall be 8" dia. and the north facing 14" square.

3.10 Features of HLW Decontamination Tanks and Spray System

Tanks shall have lifting features to allow installation of the tank using an overhead crane. When tank and associated equipment are serviced by overhead power manipulator, the maximum jaw opening shall be 5". Equipment being decontaminated is suspended inside the tank on Buyer supplied tooling supported on steps inside the spray ring assembly. A strainer unit shall be located at the bottom of the tank. The strainer unit shall be remotely removable using the overhead power manipulator without prior removal of the spray and sparge system. When specified, temperature, density, and level sensors shall be provided by the Seller according to the design proposal drawings. When specified, Resistance Temperature Detectors (RTD) shall be dual sensor, fully sheathed in T316L stainless steel and spring loaded bayonet connector, see Section 3.4 of *Engineering Specification for Instrumentation for Package Equipment*, 24590-WTP-3PS-JQ07-T0001. Plant wash and drain shall be connected to the tank through jumpers specified on the design proposal drawing. The Buyer will confirm to the Seller details of the crane hook prior to final design.

The spray system inside the HLW tank shall be removable from the tank using a remotely operated lifting feature for nozzle adjustment and repair. Jumper connections shall be located at the top of the tank and readily accessible within the crane approach area to allow remote disconnection and removal of the spray system and pump support package. All valves shall be on/off Flowserve® Durco® Mach 1 valves, or Buyer approved equal. All valves shall comply with 24590-WTP-3PS-PV00-T0001, *Engineering Specification for Technical Supply Condition for Valves.* All valves involved with emptying the decontamination tank shall comply with 24590-WTP-3PS-JV15-T0001, *Engineering Specification for Actuators for On/Off Valves.* Actuators containing electronics shall be sealed to IP66 according to IEC 60529. Valves shall withstand solids that may pass through the finest screen on the outlet of the tank.

The tank piping and internal components shall be designed to minimize contamination traps and maximize contamination removal through rinsing.

Unless noted otherwise, specified HLW tank jumpers are 2" nominal pipe size. Pipe sizes for the various spray ring circuits, as well as for air and steam may be reduced as required to achieve specified design performance parameters provided size reduction is on the tank side of 2" jumper connectors. The tank discharge jumper to Radioactive Liquid Drain shall have a remotely

actuated Drain Valve, check valve, and flow restricting device to maintain flow at or below 30 gpm.

The HLW tank chemical injection, air piping, and all other sizes less than ¾" shall incorporate Staubli (or approved equal) remotely operated connectors where engaged by MSMs.

Remote operated electrical power, control, and instrumentation connectors, where engaged by MSMs, shall be provided by the Buyer. Mounting and terminating is the responsibility of the Seller. If Buyer is incapable of providing electrical or instrument jumper connectors at the time required by the Seller, The Seller shall provide temporary cables as necessary to facilitate testing and provide terminal strips and bulkhead connectors to terminate and mount buyer provided jumpers at a later date.

Major features of the pump support package include, but are not limited to:

- Entire system remotely operable to facilitate liquid recirculation for decontamination of radioactive equipment
- Jumpered connections between the pump, tank, plant wash and drain
- Entire system capable of being flushed and rinsed
- Cover and panels, when specified, shall be remotely removable
- Control panel out-cell on cell wall accessible to operators
- Remotely removable electrical, plant air, and jumpered connections
- Chemical injection equipment shall be provided with spill pallet or other spill containment

3.10.1 Decontamination Tank Control and Instrumentation System

The HLW tank control and instrumentation shall be a turn-key system consisting of a Decon Tank Control Panel, Chemical Injection Control Panel, and all associated sensing, indicating, interlocks, and control elements required to provide a functional decontamination system. See Appendix A for a pictorial representation of the HLW Decontamination Tank Instrumentation and Control System.

The Decon Tank Control Panel shall house all controls and indication associated with Decon Tank operations, including lamp test and self diagnostics. The panel shall have on/off controls for the following:

- Recirculating Pump
- Temperature Controller

The tank control panel shall have open/close switches for the following:

- Plant Wash Supply Valve
- Plant Steam Supply Valve
- Top Spray Ring Supply Valve
- Middle Spray Ring Supply Valve
- Bottom Spray Ring Supply Valve
- Drain Valve (valve by Buyer)
- Recirculating/Drain 3-way Valve

The tank control panel shall have the following indication:

- Tank Level
- Tank Liquid Density
- Tank Temperature

The tank control panel shall have equipment status indication for the following:

- Plant Wash Supply Valve position
- Plant Steam Supply Valve position
- Top Spray Ring Supply Valve position
- Middle Spray Ring Supply Valve position
- Bottom Spray Ring Supply Valve position
- Drain Valve (valve by Buyer) position
- Recirculating/Drain 3-way Valve position
- Chemical Injection Pump

The control panel shall have indication for interlock enable/disable functions and remote panel enable/disable for the following:

- Drain Valve interlock with plant RLD Tank Level
- Break Pot feeder valve(s) status
- Break Pot temperature
- Chemical Injection Control Panel remote control for Recirculating Pump

3.10.2 Chemical Injection Control Panel

The Chemical Injection Control Panel shall house all controls and indication associated with Chemical Injection operations, including lamp test and self diagnostics. The panel shall have on/off controls for the following:

- Chemical Injection Pump
- Recirculating Pump

The control panel shall also have equipment status indication for the following:

- Chemical Injection Pump
- Recirculating Pump
- Drain/Recirculating 3-way Valve

The control panel shall have Decontamination Tank indication status for the following:

- Tank Level
- Tank Liquid Density
- Tank Temperature

3.11 Major features of the PTF Decon Tank include, but are not limited to:

- Jumpered connections between plant wash and the tank
- Entire system remotely operable
- A steam operated ejector is used to transfer the vessel contents to plant wash and drain
- A removable and reusable sediment screen is installed at the tank drain/ejector inlet
- A steam sparge system is fitted to provide agitation of contents

3.12 Design Life

All hardware, less consumables shall have a design life of 40 years.

3.13 Environmental Conditions

The equipment shall be designed and manufactured to be suitable for operation within the environment of the LAW, HLW, PTF, and LAB building operating areas as shown on the Mechanical Data Sheets or otherwise specified.

3.14 Mechanical Requirements For Decontamination Booths and Gloveboxes

Equipment subject to maintenance shall be broken down into convenient sub-assemblies to effect ease of replacement per section 5.2.2 of 24590-WTP-3PS-M000-T0002, *General Specification for Mechanical Handling Equipment Design and Manufacture.*

3.14.1 Bearings

See *General Specification for Mechanical Handling Equipment Design and Manufacture* 24590-WTP-3PS-M000-T0002, Section 4, Bearings and Bushings.

3.14.2 Fasteners

The use of hexagon headed bolts with sufficient clearance for socket wrenches is required. The range of bolt sizes shall be kept to a minimum in order to limit the number of tools required for maintenance. All bolt types shall be of USCS (inch) units.

Set screws used for locking purposes do not require mechanical locking, but require the use of a removable thread locking compound similar to Loctite Threadlock 242.

Washers, plain or spring, shall not be used except where specifically required and shown on Seller drawings.

Fasteners that might have to be removed for maintenance purposes will be accessible from the worker side of the glovebox.

See "*General Specification for Mechanical Handling Equipment Design and Manufacture*", 24590-WTP-3PS-M000-T0002, Section 4, Fasteners, for additional information.

3.14.3 Lift Points and Lifting Hardware

The glovebox and decontamination booth shall have designated lift points clearly identified in accordance with section 3.4 of 24590-WTP-3PS-M000-T0002, *General Specification for Mechanical Handling Equipment Design and Manufacture.* The gross weights of the equipment shall be noted on the external packaging.

3.15 Mechanical Requirements For Decontamination Tanks

3.15.1 Corrosion Allowance

Corrosion allowance for decontamination tanks is specified on the MDS or DPD and shall be applied to each surface exposed to process vapor or liquid. Internal piping and charge tanks (if used) shall have the specified corrosion allowance applied to both internal and external surfaces, in accordance with 24590-WTP-3PB-P000-TS11B, *Piping Material Classification, Pipe Class* S11B.

- Unless otherwise specified, corrosion allowance shall not be applied to external tank surfaces.

3.15.2 Supports and Anchors

- Seller shall provide tank supports as illustrated on the associated DPD.
- For vertical tanks, the minimum anchor bolt diameter shall be 1 inch UNC unless otherwise specified on the Buyer DPD.
- A minimum of four bolts is to be used. Larger numbers are to be multiples of four.
- Supports and anchors shall be designed to secure a buoyant tank in case the tank is empty and fully submerged.
- Supports for piping and jumper nozzles.

3.16 Mechanical Requirements For Spray Lances

Seller shall verify spray lance compatibility with Master Slave Manipulator (MSM) and power manipulator when compatibility is noted on the MDS. The MSM's jaws shall have the dimensions of ½ in. wide and 1 ¾ in. long. The Buyer will provide the Seller details of the power manipulator jaws prior to the final design. The maximum thrust of the spray lance shall not exceed 20 lbs, measured at the MSM grip point.

3.17 Mechanical Requirements For Decontamination Blast and Spray Equipment

Seller shall verify compatibility with Master Slave Manipulator (MSM) when using out cell controls during remote in-cell operated spray lances in accordance with 24590-WTP-3PS-M000-T0002, *General Specification for Mechanical Handling Equipment Design and Manufacture, Section 5.2.6.* The force produced by the blast and spray equipment shall not inhibit remote operation of the lance.

3.18 Mechanical Requirements For Crane Decontamination Equipment

The crane decontamination equipment shall be designed in accordance with 24590-WTP-3PS-M000-T0002, *General Specification for Mechanical Handling Equipment Design and Manufacture, Section 5.2,* and relevant proposal drawings 24590-HLW-M0-HSH-00078.

Nozzle adjustment and hose reel connections shall be done remotely before use with either the power manipulator or MSM.

3.19 Seismic Loading

Seismic loads associated with decontamination tanks shall be determined from 24590-WTP-3PS-FB01-TP001, *Engineering Specification for Structural Design Loads for Seismic Category III & IV Equipment and Tanks* Refer to the Design Proposal Drawing and the Basic Requirements section of this specification for the appropriate seismic classification. Through a seismic event, the decontamination tanks shall remain upright, intact and structurally sound, preventing any liquid loss through rupture or failure, and retain all mechanical contents housed in them,

3.20 Electrical Requirements

Refer to 24590-WTP-3PS-JQ07-T0001, *Engineering Specification for Instrumentation for Package Systems* for requirements for instrumentation and control of deliverable equipment.

Refer to 24590-WTP-3PS-EKP0-T0001, *Engineering Specification for Electrical Requirements for Packaged Equipment* for electrical requirements for deliverable equipment.

Wiring diagrams for all electrical connections shall be submitted to the Buyer for all the decontamination booths and gloveboxes as well as the Decontamination Tank and Chemical Injection Control and Instrumentation Systems. These submittals are summarized in the G321-E form.

The decontamination booths, decontamination gloveboxes, decontamination tanks and spray system, and parts washer shall be designed for permanent grounding per NFPA 70. Grounding shall comply with the Grounding Section 6.6 of the *Engineering Specification for Electrical Requirements for Packaged Equipment*, 24590-WTP-3PS-EKP0-T0001.

The layout of components and wiring shall be such as to afford easy access for operation and maintenance.

3.21 Accessibility and Maintenance

The unit shall be configured so that standard maintenance techniques and practices can be utilized during maintenance.

Seller shall provide special tooling if required. Tooling shall meet requirements of MSMs if used in a Hot Cell in accordance with 24590-WTP-3PS-M000-T0002, *General Specification for Mechanical Handling Equipment Design and Manufacture, Section 5.2.6.*

4 Materials

4.1 Construction

Materials of construction shall be as specified on the DPD and MDSs. If Seller desires to use alternative materials, a change request shall be processed via the Supplier Deviation Disposition Request (SDDR) form.

Selection of commercial components indicated on the DPD is for proposal purposes only. The Seller is responsible for full validation of the components selected for the contracted application whether identical to the proposed items or otherwise.

All materials installed or used shall be used in accordance with MSDS requirements in 29 CFR 1910.

Gloveboxes/Decontamination Booths, their incorporated windows, and hoods shall be of noncombustible materials.

Do not use materials containing Teflon or zinc during manufacture or testing of any deliverable equipment that is subject to acids or high radioactive environments.

Marking or packing materials containing chlorides shall not be used on stainless steel components. Cleaning agents or solutions that can adversely affect the materials shall not be used. The Seller shall take suitable precautions during all stages of construction to prevent carbon steel contamination of stainless steels.

Material Test Reports (MTR) for all structural load bearing stainless steel and carbon steel shall be submitted to Buyer per this specification and as summarized in G321-V form.

Where special requirements or restrictions are applied to standard commercial items, these will be specified on the drawings or in accompanying documentation.

Materials shall meet the requirements listed in section 4.11 of *General Specification for Mechanical Handling Equipment Design and Manufacture, (*24590-WTP-3PS-M000-T0002) unless otherwise specified such as for radiation requirements. For structural tubing, per 24590-WTP-3PN-HD00-00001, ASTM A554 may be substituted for ASTM A511.

Materials shall be new and free from defects. Classification of fabrication materials shall be in accordance with ASTM.

Seller shall perform a positive identification of materials test in the fabrication of each tank per 24590-WTP-3PS-G000-TP002, *Engineering Specification for Positive Material Identification.* This is applicable to all alloys higher than Type 304L and wetted by process or acidic decontamination liquids or vapors.

4.1.1 Pipe Fittings

Pipe fittings shall conform to the appropriate ASME and ANSI standards for materials and dimensions unless otherwise stated in the purchase order, see 24590-WTP-3PS-P000-

T0001 *Engineering Specification for Piping Material Classes.* The piping material class for interfacing to the Buyer provided jumper piping shall be S11B.

4.2 Spray Lances

All external surfaces shall be resistant to oxidation and compatible with chemicals listed on the MDSs. Anodizing and coating procedures proposed for normally readily oxidized materials shall be approved by the Buyer.

4.3 Equipment Subject to Radiation:

See Section 5, *General Specification for Mechanical Handling Equipment Design and Manufacture*, 24590-WTP-3PS-M000-T0002, for materials approved for radiation environments.

4.4 Prohibited Materials

See Section 4, under Materials, Prohibited Materials, *General Specification for Mechanical Handling Equipment Design and Manufacture*, 24590-WTP-3PS-M000-T0002 for those materials not to be used.

5 Fabrication

5.1 General

Fabrication shall be undertaken using USCS "inch-pound" units, unless otherwise approved by the Buyer. Manufacture shall conform to the requirements of drawings and specifications. The Seller shall inform the Buyer if any aspect of the drawing or specification content is incorrect, or if the application could have an adverse effect on the operation or reliability of equipment. Changes to Buyer requirements cannot be made except with the written consent of the Buyer via the Supplier Deviation Disposition Request (SDDR) form.

5.1.1 Welding

- All welding procedure processes and consumables for carbon steel or stainless steel shall be to AWS D1.1, AWS D1.6, AWS D9.1, subject to the limitations and requirements of 24590-WTP-3PS-SS00-T0001, *Engineering Specification for Welding Carbon Structural Steel and* 24590-WTP-3PS-SS00-T0002, *Engineering Specification for Welding of Structural Stainless Steel and Welding of Structural Carbon Steel to Structural Stainless Steel.*
- Reports of weld inspections shall be submitted to the Buyer for information as part of the data package.
- Buyer retains the right to require weld procedure tests to be conducted when deemed necessary.
- Welder qualifications shall be preformed in accordance with AWS D1.1, and AWS D1.6.

5.1.2 Assembly

Unless otherwise specified on the drawing, fabrications shall be free of pockets or traps where water may lodge, and totally enclosed box specifications shall be leak tight to prevent the ingress of fluid, for example water, during decontamination.

5.1.3 Heat Treatment

Seller shall determine if special heat treatment processes are required during fabrication. If required, procedures shall be submitted for review as summarized in the G321-E form. Vibratory stress relief is not acceptable.

5.1.4 Surface Finish

See 24590-WTP-3PS-M000-T0002, *General Specification for Mechanical Handling Equipment Design and Manufacture*, Section 5, Finish Aspects and Coatings for finishing requirements.

5.1.5 Miscellaneous Requirements

- Jigs and fixtures shall be retained by the Seller until written authority to scrap is received from the Buyer.
- See 24590-WTP-3PS-M000-T0002, *General Specification for Mechanical Handling Equipment Design and Manufacture*, Section 5 for additional fabrication requirements.
- Glovebox and Decontamination Booth shall be constructed in sections. For accessibility restrictions during installation, the maximum envelope dimensions of an individual section shall not exceed 5' × 6'-6" × 7'-6".

5.2 Decontamination Tanks

5.2.1 General

Seller shall, if necessary, provide temporary stiffening and jigging to prevent shell distortion during fabrication, welding processes, heat treatment, hydrostatic testing, or shipment.

Fabrication tolerances shall be in accordance with DPDs.

The sequence of fabrication shall be planned to permit maximum access to the internal surfaces to enable examination of all welds. Internal welds shall be inspected and signed off prior to continued fabrication.

Plates and pipes shall be cut to size and shape by machining, grinding, shearing, plasma, laser, or water jet cutting. All thickness of plate or pipe cut by air plasma cutting shall have the edges dressed to a smooth, bright finish. Material cut by the inert gas shielded plasma, laser or water jet process will not require further dressing other than deburring. All lubricants, burrs, and debris shall be removed after cutting.

If a butt-welded seam is required between materials of different thickness, the thicker material shall normally be machined on the side away from the process liquid. Machining shall ensure a smooth finished profile with no sharp corners.

When rolling any austenitic stainless plate, care shall be taken to prevent carbon pickup or contamination of rolled material. The work area shall be free of carbon steel grindings and general cleanliness shall be maintained to preclude carbon contamination.

Only stainless steel brushes, clean iron-free sand, ceramic or stainless steel grit shall be used for cleaning stainless steel or non-ferrous alloy surfaces. Cleaning tools or materials shall not have been previously used on carbon steel.

Internal piping bends shall have a center line radius of four times the pipe nominal diameter. In confined spaces, the center line radius may be reduced to three times the outside diameter of the pipe. The pipe shall not be terminated or butt-welded within the bend, a straight length of 4 inches prior to the weld is recommended, see 24590-WTP-3PS-P000-TP001 *Engineering Specification for Piping Material Classes.* The piping material class for interfacing to the Buyer provided jumper piping shall be S11B.

Pipe bending methods, tolerances, processes, and material requirements shall comply with PFI Standard ES-24 and require Buyer's review. These requirements shall apply equally to tube bending processes.

5.2.2 Layout

Plate size shall be chosen to minimize welding.

The longitudinal seams of adjacent shell courses shall be staggered by a minimum length (measured from the toe of the welds) of 5 times the plate thickness, or 4 inches whichever is greater. Where it is considered impractical to meet this requirement, Seller shall submit a proposed layout to the Buyer for review.

Saddles shall be continuously welded to the shell. Welded seams under the saddle or wear plate are not permitted. Longitudinal weld seams in the shell should not be located within 15° of the horn of the saddle.

Plate layouts shall be arranged so that longitudinal and circumferential weld seams clear all nozzles, and their reinforcing pads to the maximum extent possible. A minimum clearance of eight times the plate thickness from the toes of the welds is required.

Structural attachment welds such as internal support rings or clips, external stiffening rings, insulation support rings, and ladder, platform or pipe support clips shall clear weld seams by a minimum of 2 inches. If overlap of pad type structural attachments and weld seams is unavoidable, the portion of the seam to be covered shall be ground flush and radiographically examined before the attachment is welded. The seam shall be radiographed per API 620.. Radiographic examination of longitudinal weld seams is not required when single-plate edge type attachments such as tray support rings, stiffening rings, insulation support rings, ladder, platform, or pipe support clips cross such weld seams.

5.2.3 Nozzles, and Reinforcing Pads

When applicable, nozzles that require field welds during equipment installation shall be prepared for field welding by fitting with a protective cover of the same material, tack welding in place and sealed to prevent dirt and water from entering the tank.

All jumpers are 2" nominal pipe size unless noted otherwise, see 24590-WTP-3PS-P000-T0001 *Engineering Specification for Piping Material Classes.* The piping material class for interfacing to the Buyer provided jumper piping shall be S11B. Jumper nozzles will be provided by the Buyer. Nozzle materials of construction are different from the remainder of the mating piping yet are compatible. The Seller will be required to generate a specific weld procedure. Nozzle materials of construction will be available to the Seller after the purchase order is awarded.

5.2.4 Welding

All welding shall be continuous. Stitch welding is prohibited.

Joints shall be assembled and retained in position for welding. The use of manipulators or other devices to permit welding in the flat position should be employed where practical.

All attachments e.g. lugs, brackets, nozzles, pads and reinforcements around openings (when permitted) and other members shall follow the contour and shape of the surface to which they will be attached. The gap at all exposed edges to be welded shall not exceed 1/16 inch or one-twentieth of the thickness of the attachment at the point of attachment whichever is greater.

Where fillet welds only are used, the maximum fit-up gap between the components being joined shall be 1/8 inch. The components shall be clamped or otherwise maintained together during welding.

Attachment point of spiders, braces, or other temporary attachments shall match the material of the tank.

All welding involving decontamination tanks shall be completed according to API 620.

5.3 Crane Decontamination Equipment

5.3.1 Miscellaneous Requirements

See 24590-WTP-3PS-M000-T0002, *General Specification for Mechanical Handling Equipment Design and Manufacture*, Section 5.1 for any additional fabrication requirements. The lifting bail shall be constructed according to Appendix D, Remote Hook and Bail Configuration. The lifting bail shall be constructed for 3 ton rotating hook applications using the 3 ton lifting bail dimensions.

6 Tests and Inspections

6.1 General

6.1.1 Standard/Commercial Manufacture Items

Standard commercial items such as fasteners, gearboxes, actuators, and electric motors shall in general be inspected and tested against manufacturers specifications and industry standards.

6.1.2 Sub-Assemblies

Where sub-assemblies erected at the shop have to be dismantled for transport to the site, the fasteners holding them together shall be inspected. Fasteners exhibiting distortion, galling, permanent set, or other damage shall, at the discretion of the Buyer, be replaced.

6.1.3 Inspection and Test Plan

The Seller shall submit an inspection and test plan as summarized in the G321-E form. The inspection and test plan shall summarize the manufacturing sequences, including Seller and Buyer test points and hold or notification points for Buyer's inspection as indicated in the Buyer's surveillance plan.

This plan shall include provisions for increased hold and notification points as the project progresses. The Seller shall submit an inspection report to the Buyer as summarized in the G321-E form.

6.1.4 Hardness Testing

- Hardness testing is required when austenitic stainless steel plate is cold formed to make sections such as angles and channels.
- Hardness testing is required when austenitic stainless steel pipe is cold formed for bends with a centerline radius less than three times the nominal pipe diameter.
- Any cold forming process, which may significantly increase hardness, shall be in accordance with an approved procedure, which contains hardness testing. The procedure and report shall be submitted in the mechanical test procedure and report as summarized in the G321-E and G321-V form.
- Hardness testing shall be performed on areas subject to the greatest deformation after cold working or any re-work. The maximum permitted hardness is HRB 92.
- If the maximum permitted hardness is exceeded, the Seller shall heat treat and test the component to meet this requirement. Seller shall submit a written procedure and report for suitable heat treatment and testing as summarized in the G321-E and G321-V form.

6.1.5 Surface Finish Inspection

Included in the inspection and test plan summarized in the G321-E form shall be procedures for visually inspecting the surface finish of each manufactured item. The inspections shall be performed after completion of all fabrication, cleaning, finish coating (where applicable), and testing.

Inspection of mill finished, ground, or machined surface finishes shall confirm that design requirements have been met.

Inspection of weld surface finishes, shall confirm that design requirements have been met, and shall take place prior to finish coating (where applicable).

Following inspection, the Seller shall verify acceptance of surface finishes in an inspection report as summarized in the G321-V form.

6.1.6 Visual Weld Inspection

The Seller shall develop and implement a procedure to perform visual weld inspections (visual tests, VT) to inspect 100% of each weld. The inspection shall be developed in accordance with AWS D1.1 and AWS D1.6.

The Seller shall submit a visual weld inspection report and weld map for each fabricated item. The report shall record inspection results, the date and time of inspection, and signatures of certified inspection personnel performing the inspection.

The visual weld inspection report and weld map shall be submitted as summarized in the G321-V form.

6.2 Decontamination Booths and Gloveboxes

6.2.1 Leak Testing

The glovebox and decontamination booth shall be leak tested per Section 5.11.3 in the AGS-G001 standard. The decontamination booth leak rate shall be applied to the outer boundary of the decontamination booth/airlock assembly. The leak rate (volume per hour) shall not exceed .5% of the volume at 4 in. w.g. as specified in the AGS-G001 standard. The leak rate procedures and test results shall be submitted to the Buyer as summarized in the G321-E and G321-V forms.

6.3 Decontamination Tanks and Spray System

6.3.1 Shop Tests

Submit an atmospheric hydrostatic leak test procedure and report of the tank, pump, and associated piping as summarized on the G321-E and G321-V form by:

- Filling the tank with water to the overflow and holding for a minimum of one (1) hour.

6.3.2 Performance Testing

Upon completion of the hydrostatic testing, the Seller shall run performance testing on the spraying system by circulating the water used for hydrostatic testing in the three

configurations described in paragraph 3.3. Actuate each configuration using the control panel and associated valves. Measure and record the following parameters in each of the three configurations:

- Circulating pump discharge pressure
- Total flow rate
- Spray pattern (video recording is preferred)

Upon completion of performance testing, run the circulating pump until all water is discharged from the tank by actuating the 3-way valve in the discharge configuration.

Demonstration of the removal and installation of the spray ring assembly can be accomplished as planned using the lifting device and shop crane. Demonstration of the removal and installation of the pump support package can be accomplished as intended using the lifting equipment and shop crane. Demonstration of the installation and removal of the discharge filter screen. Demonstrate the interchangeability of the Melter 1 Pump Support Package on Melter 2 Decontamination Tank and vise versa. Mechanical test procedures used to perform these tests shall be submitted to the Buyer as summarized in the G321-E form. The results of the test procedures shall be submitted to the Buyer as summarized in the G321-V form.

6.3.3 Non-Destructive Examinations (NDE)

Main shell seams on all tanks shall be in accordance with API 620. Seams shall have the root weld back-gouged and dressed and radiograph inspected per API 620. All welds joining the nozzle neck to the shell, bottom, or heads, shall be dye-penetrant tested. Dye-penetrant testing shall be performed in accordance with section 7.15.4 of API 620. Manufacturer's radiograph and dye penetrant test methods shall be submitted to the Buyer as summarized in the G321-E form. Records of the dye penetrant and radiograph tests shall be submitted to the Buyer as summarized in the G321-V form. Submit radiograph film as summarized on the 321-E form.

All mandatory NDE (visual) of the tank surface shall be carried out after the completion of fabrication, including any heat treatment. The NDE work must be performed by an inspector certified to the requirements of SNT-TC-1A. The interpretation of the results shall be done by either Level II or Level III inspectors certified to SNT-TC-1A.

6.3.4 Final Inspection of Completed Tank

All external and, where access permits, internal examinations will be carried out by the Seller according to test and inspection procedures submitted to the Buyer as summarized in the G321-E form. The finished dimensions and cleanliness of the tanks shall comply with the relevant Drawings and specifications after completion of all tests. The results of the test and inspection plan shall be submitted to the Buyer as summarized in the G321-V form.

6.4 Spray Lances

6.4.1 Shop Tests

The Seller shall submit a mechanical test procedure as summarized in the G321-E form. The mechanical test procedure shall verify the operability of the equipment in accordance to the requirements of the datasheet. Specifically, the equipment shall operate over the entire pressure range, and work correctly with the MSM or power manipulator being supplied to the Buyer. The results of the test procedures shall be submitted to the Buyer as summarized in the G321-E form.

6.5 Decontamination Blast or Spray Equipment

The Seller shall submit a mechanical test procedure as summarized in the G321-E form. The mechanical test procedure shall verify the operability of the equipment in accordance to the requirements of the datasheet. Specifically, the equipment shall operate over the entire pressure range, and work correctly with the Seller supplied foot pedal. The results of the test procedure shall be submitted to the Buyer as summarized in the G321-E form.

6.6 Crane Decontamination Equipment

6.6.1 Shop Tests

The Seller shall submit a mechanical test procedure as summarized in the G321-E form. The mechanical test procedure shall include the angles of which the lance can be operated at, a functionality test using a pressure washer at 1500 psi and approximately 2.5 gallons/minute, and a functionality test using the maximum blast pressure and ice consumption of the CO_2 blast unit. The results of the mechanical test procedure test shall be submitted to the Buyer as summarized in the G321-V form.

6.7 Parts Washer

6.7.1 Shop Tests

The Seller shall submit a mechanical test procedure to the Buyer outlining the functionality test as summarized in the G321-E form. The results of the mechanical test report shall be submitted to the Buyer as summarized in the G321-V form.

7 Preparation for Shipment

7.1 General

Packaging, handling, and storage will be performed in accordance with project specification 24590-WTP-3PS-G000-T0003, *Engineering Specification for Packaging, Handling, and Storage Requirements*. The Seller shall submit all documents listed in Section 11 of *Engineering Specification for Packaging, Handling, and Storage Requirements* as summarized in G321-E form.

7.2 Surface Preparation

Remove all dirt, oil, grease, loose mill scale, rust, weld splatter, and other foreign matter on surfaces to be painted. Solvent clean surfaces to SSPC-SP1 as the minimum or to the manufacture's recommended criteria if equal or better for the following equipment: crane decontamination equipment, decontamination booths, and gloveboxes.

7.3 Painting and Coatings

Seller shall paint or coat items in accordance with 24590-WTP-3PS-M000-T0002, *General Specification for Mechanical Handling Equipment Design and Manufacture, Section 4.13.* This requirement applies to the following equipment: crane decontamination equipment, tanks, pump support package, decontamination booths, and gloveboxes.

7.4 Tagging

The deliverable equipment shall be tagged in accordance with Section 7 of the Purchase Order.

Each piece of equipment shall be tagged or labeled with its Plant Item Number in accordance with the *General Specification for Mechanical Handling Equipment Design and Manufacture* (24590-WTP-3PS-M000-T0002) Human Factors Table. Refer to MDS or DPD for further details on nameplates as specified.

Tagging requirements for the tanks and other deliverable equipment are shown on the DPD. A stainless steel nameplate in characters not less than ¼ inch high shall be attached to the decontamination booths and gloveboxes showing the plant item number in a normally visible location. A stainless steel tag plate shall be attached with a stainless steel wire to all other equipment listed in this specification. Separate or loose items shall be tagged with the plant item number for which they are intended. Instruments shall be tagged according to the *Engineering Specification for Instrumentation for Package Systems*, 24590-WTP-3PS-JQ07-T0001, Section 8.

7.5 Packaging

The equipment shall be packaged in accordance with Section 7 of the MR.

The Seller shall verify, by calculation if necessary, that the tank and internals will withstand loads occurring during shipping for the chosen mode of transportation.

Threaded connections shall be cleaned and protected with metal or plastic caps and plugs.

All equipment shall be adequately packed, braced, supported, and securely anchored such that the equipment is fully protected for shipment.

All separate or loose items shall be boxed, individually protected as required and packed in a plywood container for shipment. Each container shall include a complete copy of the Bill of Materials identifying each item in the container.

Equipment enclosed in boxes shall have the Buyer's purchase order number and equipment number affixed on the outside of the box per Section 7 of the Purchase Order.

The Seller shall be solely responsible for the adequacy of the preparation for shipment. In addition, the Seller will provide detailed instructions for storage and handling.

Loads shall be securely fastened to pallets, stillages, timber spacers, or skids as reviewed by the Buyer, to facilitate handling. If the equipment does not posses the inherent strength to be handled using fork lift or crane, then strong backs or other bracing devices shall be provided. Loads to be handled by cranes shall be furnished with lifting eyes.

Lifting instructions shall be plainly indicated on the equipment or cases containing the equipment. Each package shall be clearly marked with the contract number, job number, plant item number and site location, together with the gross weights. For packaged equipment or equipment skids, center of load markers shall be permanently attached to the equipment to assist in lifting, removing, handling and setting the equipment.

7.5.1 Decontamination Tanks and Spray System

All flanged openings, which are not provided with a cover, shall be protected by a carbon steel blind flange of the same rating as the flange, a full-faced rubber gasket with a minimum thickness of 1/8 inch and carbon steel bolts with stainless steel washers.

For spray rings and other internal parts, suitable supports shall be provided to avoid damage during shipment. Temporary internal bracing shall be painted yellow and a label, located near the nameplate, shall state that the tank contains temporary bracing that must be removed.

When tanks are shipped in the horizontal position, the Seller shall take all necessary precautions in loading by blocking and bracing the tank and furnishing all necessary material to prevent damage to the tank or any internal component.

The Seller shall verify, by calculation if necessary, that the tank and internals will withstand loads occurring during shipping for the chosen mode of transportation.

7.6 Documentation

The Seller shall submit Material Safety Data Sheet (MSDS) for information in accordance with Section 7 of the Purchase Order. The Seller shall submit paint identifying information for the following equipment: crane decontamination equipment, tanks, pump support package, decontamination booths, and gloveboxes. MSDS and paint identifying information shall be submitted as material descriptions as summarized in the G321-E form.

8 Quality Assurance

8.1 QA Requirements Specific to Items or Services

The Seller's Quality Assurance Program (QAP) Requirements are included in 24590-WTP-3PS-G000-T0001, *General Specification for Supplier Quality Assurance Program Requirements.*

Seller's QAP Manual shall be submitted to Buyer for review in accordance with 24590-WTP-3PS-G000-T0001.

For SSC's indicated in this specification as Non-ITS, or Commercial Quality, the Seller shall have and maintain a Buyer approved Quality Assurance Program meeting the applicable sections of DOE Order O 414.1A, as per 24590-WTP-3PS-G000-T0001, and the Supplier Quality Assurance Program Requirements Data Sheet, 24590-WTP-3PD-HDYR-00005.

Should any portion of the work defined within this specification be subcontracted, these requirements shall be passed on to the sub-contractor as applicable to the work being performed.

8.2 Program QA Elements

Seller's QAP, as a minimum, shall contain the requirements detailed in the Seller Quality Assurance Program Requirements Data Sheets listed in Section 2 of the Material Requisition.

9 Configuration Management

9.1 General

Section 3 Drawings and Data Requirements of the Material Requisition lists all documentation and submittals required. The G321-V form lists all the documents required for quality verification and the G321-E form lists those engineering documents required. SDDRs shall be approved by the project prior to shipping of the item.

9.2 Meeting Minutes

The Seller shall document all discussions held in meetings between the Seller and the Buyer, or Buyer's representative, unless otherwise directed by the Buyer. The Seller shall send meeting minutes to the Buyer within 5 working days following the meeting.

9.3 Design Compliance Matrix

The Seller shall develop a matrix that tabulates the design requirements of this specification and the method of compliance. The matrix shall describe how each requirement is met including narrative as well as references to drawings, calculations, and other specific documentation that demonstrates compliance.

The matrix shall be included as a preliminary document in the 50% design review package. The preliminary document shall form the template for the final document.

The matrix shall be included as a final document in the 90% design review package.

9.4 Submittals

General requirements and submittal procedures are also covered in Section 3 of the Material Requisition. Each document to be submitted must be listed on the 15EX form. This form tracks the scheduled and actual delivery of each submittal. It will be completed at the time of award.

9.5 Quality Assurance Plan

Seller's Quality Assurance Plan (QAP) shall be submitted to the Buyer with the sellers proposal if not presently on record per this specification and as summarized in the Section 3 G-321-E form. Afterward, the QAP shall be re-submitted for project records tracking.

9.6 Drawings

Any proposed changes to Buyer drawings or documents shall be submitted to the Buyer via a Supplier Deviation Disposition Request (SDDR) in accordance with Section 2 of the Purchase Order. All drawings shall be fully dimensioned with the dimensions in USCS (inch–pound) units, showing all critical interface dimensions and their tolerances as specified. Critical interface dimensions shall be identified, including a note explaining how to distinguish these dimensions.

The Seller shall prepare and submit drawings in accordance with the American National Standards Institute/American Society of Mechanical Engineers (ANSI/ASME) Standard Y-14 series, *Drafting Standards*. The Seller shall provide wiring diagrams consistent with Buyer's *Engineering Specification for Electrical Requirements for Packaged Systems*, Section 10, 24590-WTP-3PS-EKP0-T0001. All drawings shall have an associated bill of materials that lists

- item number for each individual part
- quantity of each item listed
- description for each item listed
- reference code (ASTM, ANSI, etc.) when required for an item
- Material callout or Seller part number

As summarized in the G321-E form, Engineering Document Requirements, the Seller shall submit all shop detail drawings, assembly drawings, and foundation and mounting detail drawings for the decontamination booths and gloveboxes, the decontamination tank and spray system, and the pump support package.

The Seller shall submit all shop and detail drawings and assembly drawings for the crane decontamination equipment.

9.7 Design Reviews and Meetings

Design review shall be conducted in accordance with the method outlined in this section. The number of design reviews may be changed at the Buyer's discretion.

The Seller shall provide to the Buyer, a minimum of five (5) working days prior to the scheduled meeting, copies of documentation or information that is expected to be discussed and presented in the meeting. Documentation may be provided as either hard copies or as electronic files sent via the email (if not previously submitted in accordance with the submittal schedule).

The Seller shall participate in the design review, present the design including discussion of the provided submittals, and shall be prepared to discuss any comments.

Following the 90% design review meeting, the Buyer will formally transmit comments or other requests on the design submittals. The Seller is required to provide response/resolution to the Buyer's comments in accordance with the submittal schedule, or request deviation from the Buyer's requirements through use of the Buyer's SDDR form.

The resolved/corrected submittals shall be provided in the final design report in accordance with the submittal schedule.

9.7.1 Contract Award Design Kick-Off Meeting

The contract award kick-off meeting will be an informal discussion conducted at the Buyer's facility to ensure the newly awarded contract is clear and concise, and that the Seller has a clear understanding of the scope of the contract.

9.7.2 20% Design Review

The first interim review will be an informal review conducted at the Seller's facility after approximately 20% of the design is completed. Preliminary design media, including arrangement and assembly drawings, drawings containing maintenance envelopes, calculations and analyses will be reviewed by the Buyer.

The Seller shall be prepared to discuss any Seller-recommended changes to the approaches indicated on the Buyer's DPD and identify any conflicts with the equipment envelope dimensions.

9.7.3 50% Design Review

The second interim review will be an informal review conducted at the Buyer's facility after approximately 50% of the design is completed. Preliminary design media, including arrangement and assembly drawings, electrical design and load list, calculations and analysis, and the Design Compliance Matrix shall be provided to the Buyer for review. The preliminary design media shall be provided to the Buyer at a mutually agreed time prior to the scheduled meeting.

9.7.4 90% Design Review

At the conclusion of definitive design, a formal 90% design review will be conducted at the Buyer's facility in accordance with the RPP-WTP procedures. The (draft) final design report, including all design media, supporting calculations and analysis, Design Compliance Matrix and other required submittals which documents the design shall be provided to the Buyer.

9.7.5 Final Design Closeout Meeting

The Seller shall provide a corrected, completed final design report (and any other submittals requiring changes) that resolves any issues associated with the 90% review. An

informal meeting shall be held to accept the revised design media and resolve any remaining open items.

9.8 Procedures

For fabrication processes requiring welding, welding procedures as summarized in the G321-E form shall be submitted to the Buyer if pre-qualified welds are not used.

9.9 Manuals

Seller shall provide a clearly written instruction manual, prepared on good quality paper and suitably bound; manual shall be submitted to Buyer per this specification and as summarized in the G321-E form.

The manual shall include:

1. Installation instructions.
2. Complete parts list, recommended spare parts list, names of manufacturers with OEM model or; part numbers, and special ordering instructions (if applicable) for replaceable parts.
3. Description of the equipment, special tools, and sub-assemblies. As applicable, significant technical characteristics, test and adjustment information, and safety/warning notices.
4. Operating instructions, referencing drawings/diagrams as appropriate.
5. Maintenance and operational instructions.
6. Recommended inspection points if any, with procedures and period for inspection (preventative maintenance).
7. Site storage instructions.
8. In-storage maintenance requirements.
9. Rigging and lifting instructions.
10. Special handling requirements.

Appendix A:

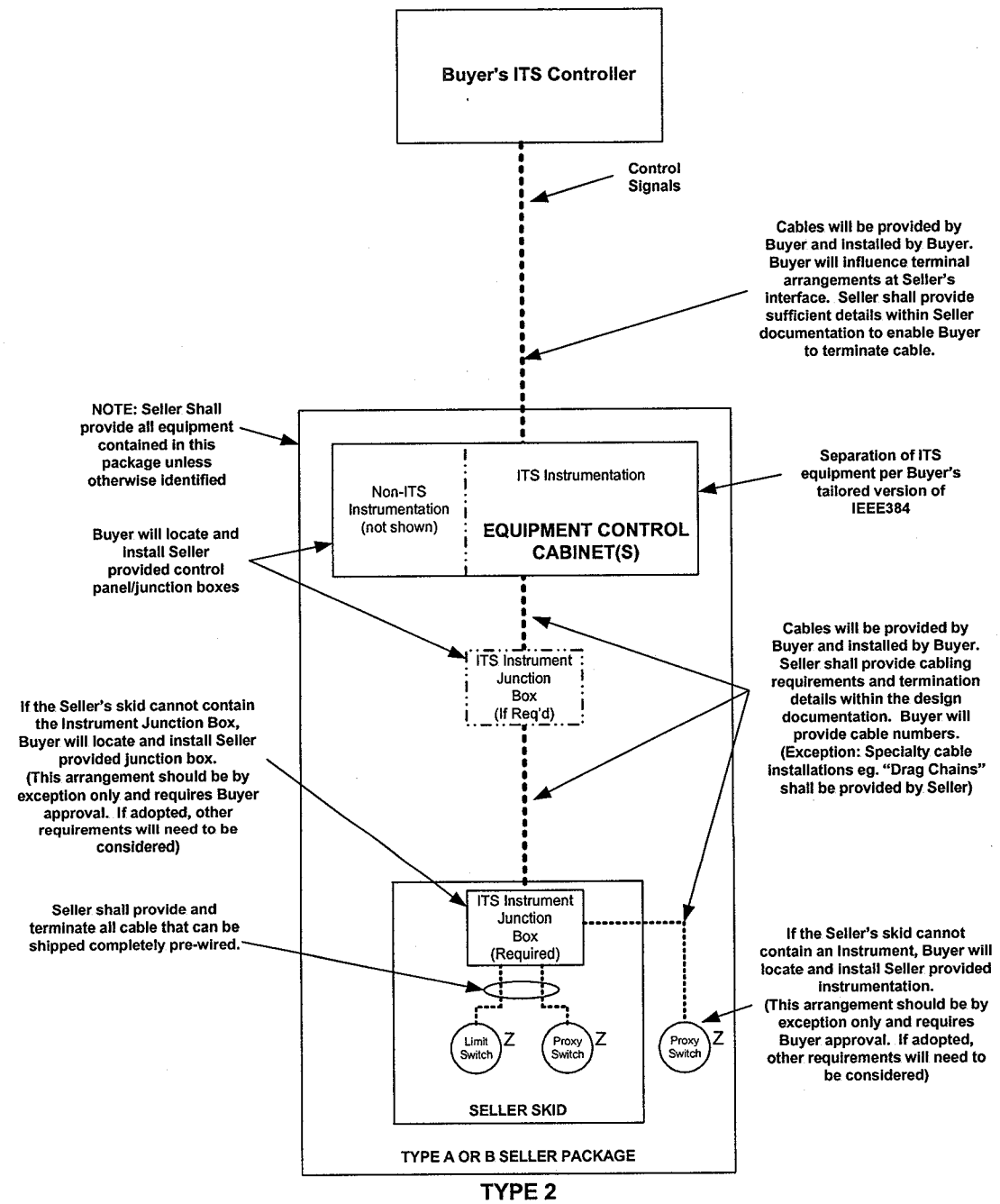

TYPE 2

DATE	REV.
04/01/03	B

Appendix B:
Equipment Plant Item Numbers and Datasheet Numbers

PIL Number	Datasheet Number	Document Description
24590-PTF-MT-PIH-TK-00001	24590-PTF-M0D-PIH-00015	Pretreatment Facility Decontamination Tank
24590-HLW-HSH-MHAN-00041	24590-HLW-M0D-HSH-00150	Parts Washer (Melter 1)
24590-HLW-HSH-MHAN-00057	24590-HLW-M0D-HSH-00212	Parts Washer (Melter 2)
24590-HLW-FH-HSH-TOOL-00027	24590-HLW-M0D-HSH-00123	Maintenance Area Manual Spray Lance (Melter 1)
24590-HLW-FH-HSH-TOOL-00028	24590-HLW-M0D-HSH-00124	Maintenance Area Upper Manual Spray Lance (Melter 1)
24590-HLW-FH-HSH-TOOL-00018	24590-HLW-M0D-HSH-00125	Decontamination Area Manual Spray Lance (Melter 1)
24590-HLW-FH-HSH-TOOL-00029	24590-HLW-M0D-HSH-00134	Decontamination Area Manual CO2 Spray Lance (Melter 1)
24590-HLW-FH-HSH-TOOL-00031	24590-HLW-M0D-HSH-00137	Melter Cave Decontamination Spray Lance (Melter 1)
24590-HLW-FH-HSH-TOOL-00020	24590-HLW-M0D-HSH-00126	Decontamination Pit Lower Remote Spray Lance (Melter 1)
24590-HLW-FH-HSH-TOOL-00022	24590-HLW-M0D-HSH-00127	Decontamination Pit Lower Remote CO2 Spray Lance (Melter 1)
24590-HLW-FH-HSH-TOOL-00023	24590-HLW-M0D-HSH-00135	Decontamination Pit Upper Remote Spray Lance (Melter 1)
24590-HLW-FH-HSH-TOOL-00030	24590-HLW-M0D-HSH-00136	Melter Cave Remote CO2 Spray Lance (Melter 1)
24590-HLW-FH-HPH-TOOL-00010	24590-HLW-M0D-HPH-00094	Spray Lance, Decon Area, Pour Tunnel 1 H-B019A
24590-HLW-FH-HSH-TOOL-00042	24590-HLW-M0D-HSH-00217	Maintenance Area Manual Spray Lance (Melter 2)
24590-HLW-FH-HSH-TOOL-00043	24590-HLW-M0D-HSH-00218	Maintenance Area Upper Manual Spray Lance (Melter 2)
24590-HLW-FH-HSH-TOOL-00039	24590-HLW-M0D-HSH-00213	Decontamination Area Manual Spray Lance (Melter 2)
24590-HLW-FH-HSH-TOOL-00044	24590-HLW-M0D-HSH-00219	Decontamination Area Manual CO2 Spray Lance (Melter 2)
24590-HLW-FH-HSH-TOOL-00046	24590-HLW-M0D-HSH-00221	Melter Cave Decontamination Spray Lance (Melter 2)
24590-HLW-FH-HSH-TOOL-00040	24590-HLW-M0D-HSH-00214	Decontamination Pit Lower Remote Spray Lance (Melter 2)
24590-HLW-FH-HSH-TOOL-00048	24590-HLW-M0D-HSH-00215	Decontamination Pit Lower Remote CO2 Spray Lance (Melter 2)
24590-HLW-FH-HSH-TOOL-00041	24590-HLW-M0D-HSH-00216	Decontamination Pit Upper Remote Spray Lance (Melter 2)
24590-HLW-FH-HSH-TOOL-00045	24590-HLW-M0D-HSH-00220	Melter Cave Remote CO2 Spray Lance (Melter 2)
24590-HLW-FH-HPH-TOOL-00029	24590-HLW-M0D-HPH-00238	Spray Lance, Bogie Decon, Pour Tunnel 2
24590-HLW-FH-HPH-TOOL-00015	24590-HLW-M0D-HPH-00093	Spray Lance, Decontamination H343 (Remote)
24590-HLW-FH-HRH-TOOL-00003	24590-HLW-M0D-HRH-00018	Spray Lance, Decontamination HB045
24590-HLW-FH-HDH-TOOL-00006	24590-HLW-M0D-HDH-00043	Canister Rinse Tunnel Spray Lance (CO2)
24590-HLW-FH-HDH-TOOL-00007	24590-HLW-M0D-HDH-00044	Canister Rinse Bogie Spray Lance
24590-HLW-FH-HMH-TOOL-00001	24590-HLW-M0D-HMH-00002	Decon Spray Lance (Air Lock Melter Sump 1)
24590-HLW-FH-HMH-TOOL-00002	24590-HLW-M0D-HMH-00003	Decon Spray Lance (Air Lock Melter Sump 2)
24590-HLW-FH-HFH-TOOL-00010	24590-HLW-M0D-HFH-00045	Power Manipulator Spray Lance (Water)
24590-HLW-FH-HFH-TOOL-00013	24590-HLW-M0D-HFH-00046	Power Manipulator Spray Lance (CO2)
24590-HLW-FH-RWH-TOOL-00022	24590-HLW-M0D-RWH-00044	Spray Lance, Manual (CO2)
24590-HLW-FH-RWH-TOOL-00020	24590-HLW-M0D-RWH-00043	Spray Lance, Remote (Liquid)
24590-PTF-FH-PFH-TOOL-00017	24590-PTF-M0D-PFH-00030	Crane Decon Manual CO2 Spray Lance
24590-PTF-FH-PFH-TOOL-00015	24590-PTF-M0D-PFH-00028	Decontamination Chamber Remote CO2 Spray Lance
24590-PTF-FH-PIH-TOOL-00024	24590-PTF-M0D-PIH-00014	Maintenance Area Remote CO2 Spray Lance
24590-PTF-FH-RWH-TOOL-00016	24590-PTF-M0D-RWH-00065	Spray Lance P-0121A
24590-PTF-FH-RWH-TOOL-00017	24590-PTF-M0D-RWH-00066	Spray Lance P-0122A
24590-PTF-FH-RWH-TOOL-00018	24590-PTF-M0D-RWH-00067	Spray Lance P-0223
24590-PTF-FH-PIH-TOOL-00028	24590-PTF-M0D-PIH-00026	Low Pressure Wash Lance, Maintenance Cave Area
24590-PTF-FH-PIH-TOOL-00026	24590-PTF-M0D-PIH-00027	High Pressure Wash Lance, Maintenance Cave Area
24590-PTF-FH-PIH-TOOL-00027	24590-PTF-M0D-PIH-00028	Low Pressure Wash Lance, Maintenance Cave Area
24590-PTF-FH-PWD-TOOL-00001	24590-PTF-M0D-PWD-00001	Low Pressure Wash Lance, Hot Cell Area
24590-PTF-FH-PWD-TOOL-00002	24590-PTF-M0D-PWD-00002	Low Pressure Wash Lance, Hot Cell Area

24590-PTF-FH-PWD-TOOL-00003	24590-PTF-M0D-PWD-00003	Low Pressure Wash Lance, Hot Cell Area
24590-PTF-FH-PWD-TOOL-00004	24590-PTF-M0D-PWD-00004	Low Pressure Wash Lance, Hot Cell Area
24590-PTF-FH-PWD-TOOL-00005	24590-PTF-M0D-PWD-00005	Low Pressure Wash Lance, Hot Cell Area
24590-PTF-FH-PWD-TOOL-00006	24590-PTF-M0D-PWD-00006	Low Pressure Wash Lance, Hot Cell Area
24590-PTF-FH-PWD-TOOL-00007	24590-PTF-M0D-PWD-00007	Low Pressure Wash Lance, Hot Cell Area
24590-PTF-FH-PWD-TOOL-00008	24590-PTF-M0D-PWD-00008	Low Pressure Wash Lance, Hot Cell Area
24590-PTF-FH-PWD-TOOL-00009	24590-PTF-M0D-PWD-00009	Low Pressure Wash Lance, Hot Cell Area
24590-PTF-FH-PWD-TOOL-00010	24590-PTF-M0D-PWD-00010	Low Pressure Wash Lance, Hot Cell Area
24590-PTF-FH-PWD-TOOL-00011	24590-PTF-M0D-PWD-00011	Low Pressure Wash Lance, P-0119
24590-WTP-MZ-30-MAINT-00002	24590-HLW-M0D-M17T-00017	HLW CO2 Decontamination Blast Unit
24590-WTP-MZ-30-MAINT-00004	24590-HLW-M0D-M10T-00030	Roaming HLW CO2 Decontamination Blast Unit
24590-HLW-FH-30-TOOL-00028	24590-HLW-M0D-30-00266	Pressure Washing Supply System, Unit 01
24590-HLW-FH-30-TOOL-00029	24590-HLW-M0D-30-00267	Pressure Washing Supply System, Unit 02
24590-WTP-MZ-10-MAINT-00001	24590-PTF-M0D-M17T-00002	PTF CO2 Decontamination Blast Unit
24590-WTP-MZ-10-MAINT-00002	24590-PTF-M0D-M10T-00007	Roaming PTF CO2 Decontamination Blast Unit
24590-WTP-MZ-20-MAINT-00001	24590-LAW-M0D-M17T-00002	LAW CO2 Decontamination Blast Unit
24590-WTP-MZ-60-MAINT-00001	24590-LAB-M0D-M10T-00003	LAB CO2 Decontamination Blast Unit
24590-HLW-FH-RWH-TOOL-00077	24590-HLW-M0D-RWH-00019	Spray Lance, Remote (CO2)
24590-PTF-FH-PIH-TOOL-00037	24590-PTF-M0D-PIH-00031	Liquid Pressure Washing Supply System, PTF Portable Unit
24590-PTF-FH-PFH-TOOL-00016	24590-PTF-M0D-PFH-00039	Spray Lance, Remote H2O

R10308582

RIVER PROTECTION PROJECT – WASTE TREATMENT PLANT

ENGINEERING SPECIFICATION

FOR

Air Displacement Slurry Pumps

EXPIRES: 07/28/05

Content applicable to ALARA? ☒ **Yes** ☐ **No**

ADR No.
N/A

Rev

NOTE: Contents of this document are Dangerous Waste Permit affecting.

Quality Designator
CM
DOE Contract No. DE-AC27-01RV14136

This bound document contains 14 pages including the cover page

REV	DATE	REASON FOR REVISION	BY	CHECK	REVIEW	QA	APEM/DEM
0	4/30/04	Issued for Permitting	M. Seed		N/A	N/A	

SPECIFICATION No. 24590-WTP-3PS-M000-TP001 **Rev** 0

Please note that source, special nuclear and byproduct materials, as defined in the Atomic Energy Act of 1954 (AEA), are regulated at the U.S. Department of Energy (DOE) facilities exclusively by DOE acting pursuant to its AEA authority. DOE asserts, that pursuant to the AEA, it has sole and exclusive responsibility and authority to regulate source, special nuclear, and byproduct materials at DOE-owned nuclear facilities. Information contained herein on radionuclides is provided for process description purposes only.

Contents

1 Scope 1
1.1 Project Description and Location 1
1.2 Definitions 1
1.3 Acronyms 1
2 Applicable Documents 2
2.1 Referenced Codes and Industry Standards 2
2.2 Reference Documents 2
3 Design Requirements 3
3.1 Functional Description 3
3.2 Work Included 3
3.3 Performance Requirements 4
3.4 ADS Pump Functional Requirements 4
3.5 Technical Requirements 5
3.6 Materials 6
3.7 Utility Services 7
3.8 Maintenance Requirements 7
4 Quality Assurance Requirements 7
5 Documentation and Submittals 8
5.1 General 8
5.2 Submittals 8

Appendices

Appendix A – LAW ADS Pump Design Interface Details A-1
Appendix B – HLW ADS Pump Design Interface Details A-2

1 Scope

1.1 Project Description and Location

A. This specification provides the criteria for design of the Air Displacement Slurry (ADS) pumps for the River Protection Project – Waste Treatment Plant (RPP-WTP) at the Hanford site of the Department of Energy. The ADS pumps will be utilized for both the High Level Waste (HLW) and Low Activity Waste (LAW) melter feed systems. The design will be similar for the HLW and LAW but may vary in dimensions, overall length, flange type and cycling to meet the contract throughput requirements, which are different for each.

B. Deleted.

C. The Subcontractor shall base design on the information provided in this specification, the referenced documents herein, and the contract documents.

D. Subcontractor shall provide submittals as required by section 5 of this specification.

E. The design of the ADS pumps shall be coordinated with the design of the melters (Reference 2.2E for LAW and Reference 2.2F for HLW) to meet the required throughput values.

1.2 Definitions

A. Actuator Assembly – A separate subassembly that uses an air cylinder to activate the poppet. The actuator is a double acting cylinder requiring two air connections.

B. Air Displacement Slurry (ADS) Pump– A mechanical device that uses air to push slurry into the melter at controlled rates.

C. Contractor – Bechtel National, Inc.

D. Poppet – The moving part of a double seal valve inside the ADS pump.

E. Subcontractor – Duratek, Inc.

F. Deleted

G. Vent Valve Assembly – A separate subassembly that uses an air actuated 3-way valve to vent the pump chamber or to supply air to chamber for moving slurry.

1.3 Acronyms

Acronyms used in this specification section include:

ADS	Air Displacement Slurry
DIW	Demineralized Water

HLW	High Level Waste
ISA	Instrument Service Air
LAW	Low Activity Waste
LFP	LAW Melter Feed Process System
HFP	HLW Melter Feed Process System
PSA	Plant Service Air
QAP	Quality Assurance Program

2 Applicable Documents

2.1 Referenced Codes and Industry Standards

Note: All Codes and Industry Standards shall be to the latest version/year/edition in force at the time of issue of the specification unless specifically identified below.

A. American Society of Mechanical Engineers ASME B31.3, 1996, *Chemical Plant and Petroleum Refinery Piping*

B. American Institute of Steel Construction, AISC MO16-89, *Manual of Steel Construction – Allowable Stress Design, 9th Edition*

C. American Institute of Steel Construction, ANSI/AISC N690-1994, *Specification for the Design, Fabrication, and Erection of Steel Safety-Related Structures for Nuclear Facilities*

D. American Society of Mechanical Engineers ASME Section VIII, Division 1, *Rules for Construction of Pressure Vessels*

E. Quality Standard for Instrument Air, ANSI/ISA-S7.0.01, 1996

F. American Society of Mechanical Engineers, ASME NQA-1, *Quality Assurance Requirements for Nuclear Facility Applications (1989).*

G. American Society of Mechanical Engineers, ASME NQA-2a, Part 2.7, *Quality Assurance Requirements of Computer Software for Nuclear Facility Applications (1990).*

2.2 Reference Documents

A. Deleted

B. 24590-WTP-3PS-FB01-T0001, *Engineering Specification for Structural Design Loads for Seismic Category III & IV Equipment*

C. 24590-WTP-3PS-SS90-T0001, *Engineering Specification for Seismic Qualification of Seismic Category I & II Equipment*

D. 24590-WTP-DC-ST-01-001, *Structural Design Criteria*

E. 24590-LAW-3PS-AE00-T0001, *Performance Specification for Low Activity Waste Melters*

F. 24590-HLW-3PS-AE00-T0001, *Performance Specification for High Level Waste Melter*

G. Statement of Work for Subcontract 24590-CM-SRA-HM00-00001, *Modeling and Design of Melters*

H. Deleted

I. 24590-WTP-3PS-G000-T0001, *Supplier Quality Assurance Program Requirements*

J. DOE-RL-92-36, *Hanford Site Hoisting and Rigging Manual*

K. 24590-WTP-TSP-RT-01-004, *Development of Simulants to Support Mixing Tests for High Level Waste and Low Activity Waste*

L. VSL-01R3520-1, *Final Report, Physical and Rheological Properties of Waste Simulants and Melter Feed for RPP-WTP-LAW Vitrification*

M. VSL-00R2520-1, *Final Report, Physical and Rheological Properties of Waste Simulants and Melter Feeds for RPP-WTP-HLW Vitrification*

3 Design Requirements

Note: The contents of this specification contain requirements for the design of both the LAW and HLW ADS pumps. If there is a specific requirement related to either the LAW or HLW pumps it will be designated as such. If no specific designation exists, the requirement applies to both LAW and HLW ADS pumps.

3.1 Functional Description

Waste concentrates (High Level and Low Activity) and dry glass formers are blended together in a feed preparation vessel to form a waste slurry. The resulting slurry is transferred to a feed vessel that supplies the melter. The ADS pumps are used to transfer the waste slurry from the feed vessel into the melter. The lower portion (housing and body) of the ADS pumps is submerged in the feed vessel while the upper portion (actuator assembly and vent valve) are positioned on the outside of the feed vessel. The assembly is connected to the feed vessel via a flange connection. HLW ADS pumps are maintained remotely via a crane hook and power manipulator. Fabrication must be to stringent tolerances to allow interchangeability.

3.2 Work Included

The Subcontractor is responsible for the design of the ADS pumps for both HLW and LAW. Designs shall include, but not be limited to: pump body, screen, poppet, lift rod, pump actuator assembly, vent valve assembly, remote lifting device (HLW), lifting device (LAW) and pump discharge line or discharge attachment point. Pump designs shall also include the mating flange connection to the feed vessel from which the pump is suspended, and all pump services and discharge line pass through. The controls for the ADS pumps will be designed as part of the deliverable requirements of Reference 2.2E and 2.2F and will not be included as a requirement

in this specification. Coordinate with contractor to define mating flange and discharge line configuration and connection requirements.

3.3 Performance Requirements

A. The ADS pumps shall be designed to support the following glass production rates:

1. LAW - 15 metric tons per day per melter.
2. HLW - 3.0 metric tons per day.

B. ADS pumps shall be designed with twice the capacity as stated in 3.3A to facilitate melter start up from an idle condition.

C. Deleted.

D. The design life of the ADS pump, pump vent assembly and pump actuator assembly shall be 5 years.

3.4 ADS Pump Functional Requirements

A. Each LAW melter shall be fed with six (6) ADS feed pumps (total) or two (2) feed pumps per melter zone. The ADS pumps shall be sized/designed so that one pump can supply each zone of the melter in the event the other pump in the zone is out of service. (Note: the LAW melters are designed with three separate zones, two feed nozzles per zone).

B. The HLW melter shall be fed with two ADS pumps, both pumps must be operating for melter operations.

C. Deleted.

D. To ensure continuous flow to each nozzle with a reduced likelihood of plugging, there shall be one feed pump per melter feed nozzle.

E. ADS pumps shall be capable of transferring a known volume of slurry based on the final pump chamber size.

F. The ADS pumps (and subsequent feed lines and nozzles) shall be designed for flushing with water on a periodic basis to clear any residual material in the feed lines and reduce the potential for plugging.

G. Inlet screens shall be provided to protect the pump and feed lines from large solids or foreign material. The screen shall be sized to prevent passage of the solids that can jam in the clearance between the poppet and the pump body.

H. ADS pumps shall be designed for back flushing the inlet screen with water on a periodic basis to remove any solids buildup on the screen.

I. Deleted.

J. The ADS pumps, actuator assembly, and vent valve assembly shall be designed with appropriate lifting bails. (Appendix A and Appendix B).

K. Air supply that contacts the feed slurry (motive air) shall be vented to the feed vessel.

L. The pump discharge line (external to the feed vessel), actuator assembly, and vent valve assembly shall be designed so that each can be replaced without having to remove the ADS pump from the feed vessel.

3.5 Technical Requirements

A. The ADS pumps shall be designed to meet Ref. 2.1A, Category D designation for all fluid containing components with the exception of the pump discharge line which shall be designed to meet Reference 2.1A, Category M designation. The flange connection to the feed vessels shall be designed in accordance with Reference 2.1D with design pressures defined in Appendix A and Appendix B.

B. The pump discharge line shall be designed with butt weld fittings only to eliminate potential crevice corrosion unless approved by the contractor. All changes in direction shall be via pipe/tube bends with minimum 5 diameter bend radius.

C. The flow velocity shall be high enough to avoid settling of solids in the feed lines. Target velocities are between 4 feet per second to 8 feet per second for all throughput requirements.

D. The ADS pump fluid carrying components shall be designed for a maximum pressure of 150 PSIG.

E. Reference Appendix A and Appendix B for the vessel operating and design pressure and temperature conditions.

F. Structural design shall be per the Allowable Stress Design method in accordance with the provisions of Reference 2.1C for the HLW ADS pumps and Reference 2.1B for the LAW ADS pumps.

G. For the purposes of seismic analysis, the HLW and LAW ADS pumps shall be designed as follows::

1. HLW – shall be in accordance with Reference 2.2C for SC-II equipment.
2. LAW – shall be in accordance with Reference 2.2B, for SC-III equipment.

H. Loadings

1. Static Loading: Design shall include the combined weight of the pump structure, poppet, flange, vent valve actuator assembly, pump actuator assembly, pump discharge line and weight associated with maximum slurry volume.
2. Dynamic Loading:
   a. Design shall consider resonant frequency with the agitator blades in the feed vessels. Agitator design data is provided in Appendix A and Appendix B.
   b. Dynamic effects from pumping forces on the pump column shall be evaluated.
   c. High cycle fatigue shall be considered.
3. Seismic Loads: Design loads shall be in accordance with Reference 2.2B for SC-III equipment (LAW ADS pumps) and in accordance with Reference 2.2C for SC-II equipment (HLW ADS pumps).
4. Other Loads to Consider:
   a. Piping/Jumper loads during normal operations.

b. Lifting attachment locations for movement of the pump assembly via the crane. Attachment point shall be designed to accommodate 5° vertical angularity during vertical pump lifts.
c. The pump must support itself while being lifted from one end, from the horizontal position to vertical.
d. Lifting bails and attachments must be designed for a minimum safety factor of 3, based on material yield strength, or safety factor of 5 based on material ultimate strength per Reference 2.2J.

5. Load combinations shall be in accordance with Reference 2.2D.

6. Coordinate between Contractor and Subcontractor for additional restraining mechanisms for the pump body to increase the natural frequency if dynamic effects warrant the addition.

I. Deflection of the ADS pumps shall be limited to avoid interaction with agitators as specified in Appendix A and Appendix B.

J. The flange connection for the feed vessel flange shall be to the design requirements of the melter feed vessels, for pressure, temperature, vacuum rating, and material compatibility and toleranced to allow remote changeout and interchangeability. See Appendix A and Appendix B.

K. The length of the ADS pump may vary between LAW and HLW with the depth and configuration of the feed vessels. See Appendix A and Appendix B for length requirements

L. Deleted

M. Feed slurry characteristics and glass forming chemicals are contained in Appendix A for LAW compositions and Appendix B for HLW composition.

N. Experience with previous ADS pump designs shall be considered to provide the best available design and technology.

O. Deleted

3.6 Materials

A. Materials selected shall be able to withstand the erosive and corrosive environment caused by the feed slurries for the design life cycle as defined in Section 3.3.D and that of the vessel it attaches to. Feed vessel material type for both HLW and LAW is ASME A240 type 316, (Appendix A and Appendix B). Erosion, corrosion and wear allowances shall be provided.

B. At a minimum, subcontractor shall evaluate the following corrosion and wear characteristics during material selection:

1. Surface finish
2. Chemical resistance
3. Radiation resistance
4. Pressure effects (cyclical)
5. Temperature effects
6. Hardness

7. Fatigue

C. Galling resistant material shall be used for pivot and sliding points.

3.7 Utility Services

A. Contractor will provide the following services to the ADS pumps: instrument air, process air, and demineralized water per Appendix A and Appendix B.

B. Deleted.

3.8 Maintenance Requirements

A. The HLW ADS pump, pump vent valve assembly, and pump actuator assembly shall be designed for remote replacement and removal. The LAW ADS pump, pump vent valve assembly, and pump actuator assembly shall be designed for hands-on maintenance.

B. The ADS pumps shall be designed for removal via an overhead crane. The pumps shall be designed to avoid snagging on the vessel flange during pump removal.

C. Indication of position shall be provided for the pump vent valve assembly to assist in troubleshooting of the assembly.

4 Quality Assurance Requirements

4.1 General

A. Subcontractor QAP requirements are included in Reference 2.2I. The Subcontractors QAP Manual shall be submitted to the Contractor for review per Reference 2.2I.

B. Subcontractor shall be responsible for all sub-tier vendor quality assurance requirements during design.

C. The ADS pumps are considered commercial grade components but shall be designed to the requirements of References 2.1F and 2.1G

D. The contractor reserves the right to review design work in progress to assess the effectiveness of the Subcontractors quality system at any time during the design process. Assessments performed by the Contractor shall in no way relieve the Subcontractor of any contractual responsibilities.

5 Documentation and Submittals

5.1 General

See Reference 2.2G for submittal format, transmission, and review requirements.

5.2 Submittals

See Reference 2.2G for specific ADS pump submittal requirements.

Appendix A – LAW ADS Pump Design Interface Details

Tag	Interface Detail	Interface Criteria	Interfacing System	Comments
lflg01	flange I.D. - vessel	12" diameter	LFP	standard 12", 150# ASME, flat face
lflg02	flange O.D. - vessel	19" diameter	LFP	standard 12", 150# ASME, flat face
lflg03	flange bolt circle - vessel	17" diameter	LFP	standard 12", 150# ASME, flat face
lflg04	flange bolt size - vessel	7/8" diameter	LFP	standard 12", 150# ASME, flat face
lflg05	flange bolt orientation - vessel	4 bolts, 90 degrees apart radially	LFP	standard 12", 150# ASME, flat face
lflg06	flange guide pin - size	7/8" diameter	LFP	
lflg07	flange guide pin – number/location/orientation	2 pins, 180 degrees apart on flg03 bolt circle	LFP	
lflg08	flange sealing requirements	O-ring, EPDM material, captive, underside flange	LFP	
lflg09	flange-vessel design pressure/temperature	15 psig (positive), full vacuum (negative), 150°F	LFP	
lflg10	flange-vessel operating pressure and temperature	0.07 psig (positive), -4.09 psig (negative), 98°F	LFP	
lflg11	flange-vessel material	SA240 316	LFP	pump material shall be compatible
lpmp01	pump length from top of vessel flange	12'-11"	LFP	
lpmp02	lifting bail requirements	pump – folding actuator – fixed vent valve - fixed	LFP	
lpmp03	deflection limits-distance from agitator to pump center to center	4'-6"	LFP	deflection limits will be based on agitator blade width and pump diameter, use lpmp03 and lpmp04
lpmp04	agitator speed/rotation/dia.	115 rpm/CW/36" dia (max)	LFP	final speed and configuration to be verified
lprc01	utility service quality – air, water	-instrument air to Reference 2.1E -process air is instrument air quality to -40°F dewpoint -demineralized water to 3.0μmho/cm conductivity	ISA PSA DIW	
lprc02	feed/waste properties	Reference 2.2K and 2.2L	LFP	

Appendix B – HLW ADS Pump Design Interface Details

Tag	Interface Detail	Interface Criteria	Interfacing System	Comments
hflg01	flange I.D. - vessel	12.75" diameter	HFP	
hflg02	flange O.D. - vessel	24.75" diameter	HFP	
hflg03	flange bolt circle - vessel	21.75" diameter	HFP	
hflg04	flange bolt size - vessel	1.25" diameter, with 2-7/8" retainer cups	HFP	
hflg05	flange bolt orientation - vessel	3 bolt, 120 degrees apart	HFP	
hflg06	flange guide pin - size	1.75" diameter	HFP	
hflg07	flange guide pin – number/location/orientation	2, 180° apart, same bolt circle as flg03	HFP	
hflg08	flange sealing requirements	remotely replaceable seal plate, rubber gasket	HFP	will be supplied with the vessel, not the ADS pumps
hflg09	flange-vessel design pressure/temperature	15 psig (positive), full vacuum (negative), 158°F	HFP	
hflg10	flange-vessel operating pressure/temperature	atmospheric to –0.104 psig, 131°F	HFP	
hflg11	flange-vessel material	SA240 316	HFP	pump flange material to be compatible
hflg12	torque-impact wrench	450 ft-lbs	HFP	
hpmp01	pump length from top of vessel flange	range: 12'-2" 13'-3"	HFP	
hpmp02	lifting bail requirements	pump – folding actuator – fixed vent valve - fixed	HFP	
hpmp03	deflection limits-distance from agitator to pump center to center	3'-3"	HFP	deflection limits will be based agitator blade width and pump diameter, use hpmp03 and hpmp04
hpmp04	agitator speed/rotation/dia	115 rpm/CW/36" dia (max)	HFP	assume same data for HLW as LAW, final speed and configuration to be verified
hpmp05	connectors	Staubli	HFP	vent valve, air actuator, air/water line, size as required for flow
hprc01	utility service quality – air, water	-instrument air to ISA S7.0.01 -process air is instrument air quality to -40°F dewpoint -demineralized water to 3.0μmho/cm	ISA PSA DIW	

		conductivity		
hprc02	feed/waste properties	Reference 2.2K and 2.2M	HFP	

RIVER PROTECTION PROJECT – WASTE TREATMENT PLANT

ENGINEERING SPECIFICATION

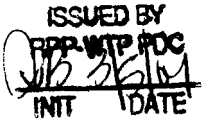

FOR

High Integrity Centrifugal Blowers

A Saguisag 03/03/04

EXPIRES: 10/22/05

THIS BOUND DOCUMENT CONTAINS A TOTAL OF 20 PAGES.

Content applicable to ALARA? ☐ **Yes** ☐ **No**

ADR No. **Rev**

Quality Designator
QL
DOE Contract No. DE-AC27-01RV14136

NOTE: Contents of this document are Dangerous Waste Permit affecting.

REV	DATE	REASON FOR REVISION	BY	CHECK	REVIEW	QA	APEM/DEM
0	1-28-04	ISSUED for PERMITTING USE	A.Saguisag	G. Garcia	Jan Sanders	N/A	G. Duncan

SPECIFICATION No. 24590-WTP-3PS-MACS-TP004 **Rev** 0

Please note that source, special nuclear and byproduct materials, as defined in the Atomic Energy Act of 1954 (AEA), are regulated at the U.S. Department of Energy (DOE) facilities exclusively by DOE acting pursuant to its AEA authority. DOE asserts that pursuant to the AEA, it has sole and exclusive responsibility and authority to regulate source, special nuclear, and byproduct materials at DOE-owned nuclear facilities. Information contained herein on radionuclides is provided for process description purposes only.

Contents

1 Scope 1
1.1 Project Description and Location 1
1.2 Equipment, Material, and Services Required 1
1.3 Work by Others 1
1.4 Definitions 2
1.5 Abbreviations 2
1.6 Safety/Quality Classifications 2
2 Applicable Documents 3
2.1 Codes 3
2.2 Industry Standards 3
2.3 Engineering Standards 4
2.4 Reference Documents/Drawings 4
3 Design Requirements 4
3.1 General 4
3.2 Basic Function 4
3.3 Performance 4
3.4 Design Conditions 5
3.5 Environmental Conditions 5
3.6 Mechanical Requirements 5
3.7 Loadings 6
3.8 Electrical Requirements 7
3.9 Instrumentation and Control Requirements 8
3.10 Accessibility and Maintenance 9
4 Materials 9
4.1 Construction 9
4.2 Prohibited Materials 9
5 Fabrication 10
5.1 Fabrication of Blowers 10
5.2 Welding 10
5.3 Assembly 10
6 Tests and Inspections 10
6.1 General 10
6.2 Personnel Qualifications 11

6.3 Non-Destructive Examinations 11
6.4 Shop Tests 11
6.5 Site Tests 11
7 Preparation for Shipment 11
7.1 General 11
7.2 Cleanliness 12
7.3 Painting 12
7.4 Tagging 12
7.5 Packaging 12
7.6 Documentation 12
8 Quality Assurance 12
8.1 QA requirements specific to item(s) or service 13
8.2 Supplier Deviation 13
9 Configuration Management 13
10 Documentation and Submittals 13
10.1 General 13
10.2 Submittals 14

Appendices

Appendix A A-1

1 Scope

1.1 Project Description and Location

The River Protection Project-Waste Treatment Plant (WTP) is a complex of waste treatment facilities where the US Department of Energy's (DOE) Hanford site tank waste will be put into a stable glass form. The WTP Contractor will design, build, and start up the WTP pretreatment and vitrification facilities for the DOE's Office of River Protection (ORP). The waste treatment facilities will pretreat and immobilize the mixed waste (low-activity waste, LAW and high-level waste, HLW) currently stored in underground storage tanks at the Hanford Site.

The Hanford Site occupies an area of about 560 square miles and is located along the Columbia River, north of the city of Richland. The WTP Facility will be constructed at the East End of the 200 East Area of the Hanford Site. Benton, Franklin, and Grant counties surround the Hanford Site.

1.2 Equipment, Material, and Services Required

Design, furnish materials, fabricate, test, and package the High Integrity Centrifugal Blowers (hereinafter called Blower) and accessories in accordance with this specification including:

1.2.1 Blowers, each complete with electric motors, adjustable speed drives, and accessories as specified here and in referenced technical specifications and data sheets attached to the Material Requisition (MR).

1.2.2 Special tools required for installation and maintenance.

1.2.3 Each blower/motor assembly shall include all components and accessories fully assembled, wired, and skid mounted requiring only connection to the Buyer's control systems and ductwork, and to Seller supplied adjustable speed drive. Adjustable speed drives may be shipped separately.

1.2.4 Services of an erection and/or startup supervisor, if requested by Buyer.

1.3 Work by Others

1.3.1 Material unloading and storage at jobsite

1.3.2 Installation labor

1.3.3 Foundation and anchor bolts

1.3.4 Ductwork external to the unit

1.3.5 Electric power supply

1.3.6 Wiring external to the blower motor and adjustable speed drive

1.3.7 Field Testing and Inspection

1.4 Definitions

Quality Level	WTP Project's quality classifications of Systems, Structures and Components (SSC's) based on their importance to safety (ITS). Quality levels are 1 (QL-1), 2 (QL-2), 3 (QL-3), and Non-Quality Related. See Supplier Quality Assurance Program Requirements
QL-1	Safety Design Class (SDC) items. Important-To-Safety (ITS) Items and activities for which NQA-1 QA Program and NQA-2 QA Requirements shall be met.
QL-2	Safety Design Significant (SDS) items. Other items and activities for which NQA-1 and NQA-2 compliance is required.
Seismic Category	WTP Project's seismic classifications of SSC's based on their safety function. Seismic categories utilized in this specification are Seismic Category I (SC-1) and Seismic III (SC-III).
C3	Contaminated areas where work requires protective clothing (usually a single set of coveralls, canvas booties, rubber shoe covers, appropriate gloves and head covering). Respiratory protection may, on occasion, be required for specific tasks, but would not normally exceed the requirements for a full face particulate respirator. Also classified as a secondary containment zone.

1.5 Abbreviations

ABMA	American Bearing Manufacturers Association
AMCA	Air Movement and Control Association, Inc.
ASNT	American Society for Nondestructive Testing
ASME	American Society of Mechanical Engineers
AWS	American Welding Society
dB(A)	A-weighted decibel
IPS	International Pipe Standard
NEMA	National Electrical Manufacturers Association
QA	Quality Assurance
OEM	Original Equipment Manufacturer
RTD	Resistance Temperature Detector
SCFM	Standard Cubic Feet per Minute

1.6 Safety/Quality Classifications

Specific Safety Class, Quality Level and Seismic Category classifications of Blowers described in this specification are noted in Blower Data Sheets attached to MR 24590-QL-MRA-MACS-00002.

2 Applicable Documents

The following documents form a part of this specification to the extent specified herein. In the event of conflict between the document referenced herein and the contents of this specification, the Buyer shall be notified of the conflict.

Effective dates of codes and standards shall be as shown in ASME AG-1-1997 with ASME AG-1a Addenda 2000, unless noted otherwise. If effective dates of Codes and Standards to be used by Seller are different from those shown on ASME AG-1-1997 and its addenda, Seller shall provide justification for use of these versions.

2.1 Codes

2.1.1 ASME AG-1-1997 with ASME AG-1a Addenda 2000, Code on Nuclear Air and Gas Treatment

2.1.2 ASME B & PVC, Section IX, Qualification Standard for Welding and Brazing

2.1.3 ASME NQA-1-1989, Quality Assurance Program Requirements for Nuclear Facilities

2.1.4 ASME NQA-2-1989, Quality Assurance Requirements for Nuclear Facility Applications

2.1.5 AWS D1.1-2000, Structural Welding Code, Steel

2.1.6 AWS D1.3-98, Structural Welding Code, Sheet Steel

2.1.7 AWS D1.6-99, Structural Welding Code, Stainless Steel

2.1.8 AWS D9.1-2000, Sheet Metal Welding Code

2.2 Industry Standards

2.2.1 ABMA 9, Load Ratings and Fatigue Life for Ball Bearings

2.2.2 ABMA 11, Load Ratings and Fatigue Life for Roller Bearings

2.2.3 AMCA 99, Standards Handbook

2.2.4 AMCA 99-0401, Classification for Spark Resistant Construction

2.2.5 AMCA 99-2404, Drive Arrangement for Centrifugal Fans

2.2.6 AMCA 99-2406, Designations for Rotation and Discharge of Centrifugal Fans

2.2.7 AMCA 210, Laboratory Methods of Testing Fans for Rating

2.2.8 AMCA 300, Reverberant Room Method of Sound Testing of Fans

2.2.9 AMCA 301, Method for Calculating Fan Sound Ratings From Laboratory Test Data

2.2.10 ASNT-SNT-TC-1A, ASNT Recommended Practice

2.2.11 NEMA MG 1, Motors and Generator

2.2.12 NFPA 70-1999, National Electric Code

2.3 Engineering Standards

2.4 Reference Documents/Drawings

2.4.1 SPEC 24590-WTP-3PS-G000-T0001, "General Specification for Supplier Quality Assurance Program Requirements".

2.4.2 SPEC 24590-WTP-3PS-JQ07-T0001, "Instrumentation for Package Systems".

2.4.3 SPEC 24590-WTP-3PS-SS90-T0001, "Seismic Qualifications of Seismic Category I/II Equipment and Tanks".

2.4.4 SPEC 24590-WTP-3PS-FB01-T0001, "Structural Design Loads for Seismic Category III/IV Equipment and Tanks".

2.4.5 SPEC 24590-WTP-3PS-MUMI-T0002, "Low Voltage Induction Motors".

2.4.6 SPEC 24590-WTP-3PS-EVV1-T0001, "Adjustable Speed Drives".

3 Design Requirements

3.1 General

Design of the Blowers shall conform to ASME AG-1, Section BA.

3.2 Basic Function

The blowers will provide the motive force required to transport and discharge air and gaseous effluents to atmospheres, as shown in the Blower Data Sheets.

3.3 Performance

3.3.1 Blower performance rating shall be based on AMCA-210 standard air conditions and bear the AMCA Certified Rating Seal.

3.3.2 Sound Ratings shall conform to AMCA 301, and be tested in conformance to AMCA 300. Sound level data report shall be in accordance with ASME AG-1 BA-4421. Sound pressure level shall not exceed 85 dB(A) at 3-feet. Refer to Appendix A – Noise Requirements for Fans and Blowers. If sound power exceeds 85 dB(A) at 3-feet, Seller shall obtain Buyer permission to proceed in the form of a submittal stating estimated sound power level.

3.4 Design Conditions

3.4.1 Design basis performance and capacity data are as listed on the Blower Data Sheets.

3.4.2 Air stream properties are shown on Blower Data sheets. Materials of construction used shall be compatible with the effluent being handled.

3.4.3 The equipment and appurtenances will be used in a plant that has a design life of 40 years. The design objective for these Blowers shall be based on a useful life expectancy of 40 years with periodic maintenance as recommended by the Seller.

3.5 Environmental Conditions

3.5.1 Blowers will be located indoors in plant rooms maintained between 59°F dry-bulb minimum and 95°F dry-bulb maximum temperature during normal operation.

3.5.2 Blowers including motor may be stored outdoors at ambient extreme temperature range of minus (–) 23°F dry-bulb to 113°F dry-bulb and relative humidity of 5 to 100%. Adjustable speed drives (ASD) and other electronic components will be stored indoors.

3.6 Mechanical Requirements

3.6.1 See Blower Data Sheets.

3.6.2 The blower wheel and shaft shall be dynamically balanced in accordance with Section BA-4161 of ASME AG-1. The blower wheel shall be dynamically balanced prior to assembly into the housing. Final balancing shall be performed on the completed assembly. All balancing weights shall be welded in place. All vibration tests shall be in accordance with ASME AG-1, Section BA-4162, with results documented and submitted to Buyer.

3.6.3 Blower wheels shall be of the type specified in Blower Data Sheets. Blowers shall be furnished with airtight machined rotary shaft seal or packed stuffing box. Blowers, noted on Blower Data Sheets to be of Spark Resistant Construction, shall be of the AMCA Type in accordance with AMCA 99-0401.

3.6.4 Blower wheels shall be fabricated from materials noted in Blower Data Sheets.

3.6.5 Housings shall be designed for greater than 125 % of the operating pressure of the blower. Blower inlet and outlet shall include allowances for the full dead weight of any flexible connections connected to the inlet and outlet.

3.6.6 Housings shall be designed to prevent any internally propelled missiles from penetrating the housing.

3.6.7 Blowers shall be "Gas Tight" in accordance with requirements of Section BA 4142 of ASME AG-1.

3.6.8 Seller shall provide a flanged, bolted and gasketed access door, complete with handle, in blower housing to allow inspection. Access door shall be raised design to allow for field installed 2.5 in. thickness insulation when required.

3.6.9 Seller shall provide a minimum 1 in. IPS threaded drain coupling welded to housing at low point, with square headed screwed drain plug. Coupling shall be extra-long length to allow extension through 2.5 in. thick insulation, when required.

3.6.10 When indicated on the Blower Data Sheets, Seller shall provide and install insulation studs at factory for support of field installed 2.5 in. thick insulation. Studs shall be welded to exterior of blower housing.

3.6.11 Seller shall provide lifting eyes or lugs to facilitate lifting and handling of the blowers. If spreader bars or special lifting devices are required, they shall also be furnished. Lifting eyes or lugs and/or spreader bars shall be certified to be suitable for the safe, balanced lifting, and handling of the equipment.

3.6.12 Seller shall provide a grounding lug or boss on the blower housing or frame to facilitate attachment of grounding cable by the Buyer.

3.6.13 Shaft seals shall be fully capable of withstanding the required test pressures before, during, and after blower operation. Allowable leakage shall be equal to or less than 0.01 % of normal airflow, per inch of blower operating pressure, or 0.5 SCFM, whichever is greater.

3.6.14 Shafts shall be stainless steel shaft stock, turned, ground and polished, with machined keyways for attaching impeller and drive and coupling.

3.6.15 Bearings shall be heavy-duty pillow block, self-aligning, grease-lubricated ball bearings, or pillow block type, self-aligning, grease-lubricated roller bearings, suitable for the max operating temperature as indicated on the Blower Data Sheets. Seller shall provide a "heat slinger" device, attached to the blower shaft external to the housing, to help in dissipation of heat, for bearing protection, as required. Bearings shall have a minimum L-10 service rating life of at least 200,000 hours. Bearing rating life shall be established in accordance with ABMA 9 or 11, as applicable. Provide seals to prevent loss of lubricant and admission of contaminants. Provide extended lube lines and fittings as required to permit lubrication during operation.

3.6.16 Blower drive arrangement shall be as shown on Blower Data Sheets. Drive arrangement shall be per AMCA 99-2404. Designations for rotation and discharge shall be per AMCA 99-2406.

3.6.17 All accessible internal welds shall be ground smooth.

3.7 Loadings

3.7.1 Blower assemblies shall be self-supporting, capable of carrying the static loads of the blower components and the stress imposed during shipment, installation, and operation.

3.7.2 Seismic qualification of the design of blowers shall be in accordance with the methods and procedures described in Specification 24590-WTP-3PS-SS90-T0001, "Seismic Qualification of Seismic Category I/II Equipment and Tanks", or 24590-WTP-3PS-FB01-T0001,

"Structural Design Loads for Seismic Category III/IV Equipment and Tanks". For Seismic Class I or II blowers, Seller shall submit to the Buyer seismic compliance documentation as required by Specification 24590-WTP-3PS-SS90-T0001.

3.8 Electrical Requirements

3.8.1 Low Voltage Induction Motors

3.8.1.1 Induction motors shall be in accordance with Specification 24590-WTP-3PS-MUMI-T0002, Low Voltage Induction Motors, and as indicated on the motor data sheets appended to the Blower Data Sheets except:

3.8.1.1.1 Motors may have cast iron rotor cages.

3.8.1.1.2 Motor space heaters are not required. If provided, they do not have to be removable.

3.8.1.2 Electric motors shall be in accordance with NEMA MG-1.

3.8.1.3 Drive motors shall be specifically designed and constructed for use with adjustable speed drives in conformance with NEMA MG-1 Part 31 criteria, and shall be matched to the adjustable speed drive. Manufacturer shall provide certification to the Buyer that the motor and adjustable speed drive are compatible and will perform within the specified duty range without incident. Seller shall provide overspeed motor relay protection.

3.8.1.4 Motor drive combination shall be suitable for operation for the design conditions shown on the Data Sheets.

3.8.2 Adjustable Speed Drives

3.8.2.1 Adjustable speed drives shall be in accordance with Specification 24590-WTP-3PS-EVV1-T0001, Adjustable Speed Drives, except that Seller may provide certification of previous testing at 50°C for 50 hours of ASD circuit boards

3.8.2.2 The Adjustable speed drive will be controlled to respond to system operational variations, as specified in the data sheets.

3.8.2.3 The adjustable speed drive shall be matched to the drive motor being controlled.

3.8.2.4 Switching frequency for the adjustable speed drive shall be selected by the seller to suit the application.

3.8.2.5 Adjustable speed drive unit will be mounted in close proximity to the blower drive motor.

3.8.2.6 The ASD shall prevent operating the blower at critical speed(s).

3.8.3 Approval of Electrical Equipment

3.8.3.1 All electrical equipment and material including fittings, devices, apparatus, fixtures, appliances, utilization equipment, cabinets and control panels, shall be suitable for installation and use in conformity with the NFPA 70-1999.

3.8.3.2 Suitability of equipment shall be evidenced by listing or labeling by a nationally recognized testing laboratory (NRTL) as recognized by OSHA. Listing of individual components installed in cabinets and control panels shall not be construed as listing or approval of the assembled cabinet or control panel.

3.8.3.3 Alternatives to listing or labeling: With the exceptions to the electrical equipment of types specifically required to be listed by the National Electrical Code, the Authority Having Jurisdiction (AHJ) of RPP-WTP shall accept one of the applicable methods described in Paragraphs 3.8.3.4 and 3.8.3.5 below as an alternative to listing and labeling:

3.8.3.4 Equipment and assemblies certified to be safe by a NRTLs "Field Evaluated Product" mark will not be required to be listed or labeled. Internal components and material of "Field Evaluated" equipment and assemblies shall be listed, labeled or recognized if such marking is available.

3.8.3.5 Custom made equipment or related installations that are designed, fabricated for, and intended for use by RPP-WTP, and are not marketed to the general public, are not required to be listed or labeled, if they are determined by its manufacturer to be safe for its intended use. The manufacturers determination must be based on test data, which shall be kept and made available for inspection to RPP-WTP or its agents thereof.

3.9 Instrumentation and Control Requirements

3.9.1 Blowers shall be provided with three wire, dual element, 100 ohm platinum RTD to measure the temperature of each blower bearing. Temperature coefficient shall be 0.00385 ohms/ohm/°C.

3.9.2 Blowers shall also come equipped with instruments to measure the vibration of the blower bearings. The instruments shall transmit a 4-20 mA signal proportional to the vibration.

3.9.3 Both temperature and vibration sensor wires shall be connected to terminal blocks provided by the Seller. Terminal blocks shall be installed in a separate electrical termination box for external connection to Buyer's cable(s). Seller shall provide terminals to allow continuation of conductor shields.

3.9.4 Blower shaft speed sensor shall include shaft sensor, connecting cable, and a digital-to-analog signal conditioner. Signal conditioner shall be mounted on adjustable speed drive cabinet. For blower control & instrumentation requirements, see SPEC 24590-WTP-3PS-JQ07-T0001, "Instrumentation for Package Systems".

3.10 Accessibility and Maintenance

3.10.1 Buyer's layout allows for necessary access and space requirements to facilitate maintenance during normal plant operation or scheduled shutdown.

3.10.2 Seller's recommended accessibility and maintenance requirements for each piece of equipment shall be included in the Seller's submittal.

3.10.3 Frequency of inspection and maintenance intervals shall be in accordance with equipment Seller's recommendations.

4 Materials

4.1 Construction

4.1.1 Materials of construction shall conform to ASME AG-1-1997, Section BA, Article BA-3000, Table BA-3100 and the attached Blower Data Sheets as applicable.

4.1.2 Material test reports of chemical and physical properties shall be provided for all stress components of the blowers, including the blower impeller and its components, blower shaft, and driver support plate in accordance with ASME AG-1, BA-3400.

4.1.3 The ASME and/or ASTM material numbers and grades shall be identified and a Manufacturer's Material Certificate of Compliance shall be provided for scrolls, housing side plates, inlets, support framing integral to the blower, and weld filler metal in accordance with ASME AG-1, BA-3410. All material designations shall be indicated on the fabrication drawings and in the material lists.

4.1.4 Blower bearing pedestals and motor bases shall be fabricated from structural steel shapes and plates properly reinforced for maximum rigidity unless shown otherwise on the Blower Data Sheet.

4.1.5 Blower housings shall be plates fabricated from materials specified in Blower Data Sheets. All seams shall be seal welded.

4.1.6 The access door shall be on the horizontal centerline of the blower opposite the blower discharge. Door gasket and seal pads shall meet requirements of ASME AG-1 Article FE-3130.

4.1.7 Blowers shall be provided with bolted drive guards that cover the shaft and bearings meeting OSHA requirements. Provisions shall be made for insertion of tachometer and access to lube fittings without removal of drive guards.

4.2 Prohibited Materials

4.2.1 Bronze, copper, lead, zinc, tin, antimony, cadmium, or other low melting point metals, their alloys, or materials containing such metals as their basic constituents or molybdenum, and halogens shall not be used in direct contact with stainless steel. This prohibition applies to use

of tools, fixtures, paints, coatings and sealing compounds, and any other equipment or materials used by the Seller in handling, assembly and storage of stainless steel parts or components.

4.2.2 Asbestos and Teflon shall not be used in any component of the blowers or accessories.

5 Fabrication

5.1 Fabrication of Blowers

Fabrication of blowers shall be as specified in ASME AG-1, Article BA-6000.

5.2 Welding

5.2.1 All fabrication, welding, inspection and repair procedures of blower wheels, blower housing, housing framing and supports shall conform with the following, as applicable:

- AWS D1.1, Structural Welding Code, Steel
- AWS D1.3, Structural Welding Code, Sheet Steel
- AWS D1.6, Structural Welding Code, Stainless Steel
- AWS D9.1, Sheet Metal Welding Code

5.2.2 Repairs required as a result of weld rejection by either Buyer or Seller's final inspection shall be fully documented in accordance with Seller's QA program. Weld repair records shall be included with document package.

5.2.3 Welding procedures and procedure qualification records shall be submitted to Buyer for review and permission to proceed prior to use. Each procedure shall be prepared and qualified in accordance with the requirements of the above listed standards or ASME B & PVC, Section IX

5.2.4 Welds shall be inspected in accordance with ASME AG-1, Article AA-6330.

5.3 Assembly

If shipping size is a limitation, units may be fabricated and delivered in sections or subassemblies after permission to proceed has been obtained from the Buyer.

6 Tests and Inspections

6.1 General

Inspection and testing of blowers shall conform to ASME AG-1-1997, Section BA, Article BA-5000.

Seller shall conduct and shall be responsible for the shop test called for in this specification and in applicable standard and referenced documents. Seller shall furnish all facilities necessary for the performance of such tests. Tests in accordance with AMCA standards shall be done in AMCA approved facilities. Inspection and test procedures shall be submitted to Buyer. Test records and results shall be certified.

6.2 Personnel Qualifications

Personnel performing inspections and tests shall be qualified.

6.3 Non-Destructive Examinations

Personnel performing nondestructive examination or reviewing nondestructive examination results shall be certified to ASNT Standard SNT-TC-1A.

6.4 Shop Tests

Buyer's Inspector will indicate test and inspections that the inspector intends to witness after review of Seller's work plan. Buyer shall perform standard factory test which, as a minimum, includes the following, as well as tests called out in referenced specifications for the motors and ASDs. Inspector may witness the following shop tests:

6.4.1 Test for blower performance. Performance testing shall be done on one (1) of similar size blowers.

6.4.2 Functional performance test for electrical equipment.

6.4.3 Blowers shall be tested and accepted for leakage in accordance with Section BA-5142 of ASME AG-1.

6.4.4 Vibration performance shall be checked and reported at 10 % increments of full speed blower/ASD tests.

6.4.5 Acceptance of test shall be based on test procedure acceptance criteria permitted to proceed by Buyer. All test results shall be certified, documented, and submitted to Buyer for information.

6.5 Site Tests

Buyer startup personnel will perform test after initial installation. Buyer may request Seller assistance during startup.

7 Preparation for Shipment

7.1 General

Blower assemblies shall be packaged, shipped, handled and stored in accordance with ASME NQA-2, Part 2.2, Article 3.2, Levels of Packaging at the following levels:

Level B:

- Blower assemblies with motors and adjustable speed drives
- Motors and adjustable speed drives in packages separate from the blower

Level C:

- Blower assemblies without motors and adjustable speed drives

7.2 Cleanliness

Prior to surface preparation and coating application, visually examine welds, the fan impeller, air stream surfaces of the fan housing, and the air stream surfaces of all furnished accessories. Remove all dirt, oil, and grease, loose mill scale, weld spatter and other foreign matter on surfaces to be painted in accordance with Seller's cleaning and coating procedures.

7.3 Painting

All shop painting shall be in accordance with Seller's painting procedures. Seller's painting procedures shall be submitted to Buyer for information. List of surfaces to be coated, with manufacturer's names of coating materials to be used for each, and manufacturer's standard color chart shall also be submitted.

7.4 Tagging

A stainless steel nameplate shall be attached to each centrifugal blower showing the manufacturer's name, shop location, date of manufacture, serial number, equipment rating, equipment tag numbers, V&ID or P&ID drawing number, weight of assembly and purchase order number. Instruments shall be identified with Buyer provided tag numbers.

7.5 Packaging

Packaging shall be at the NQA-2, Part 2.2, Section 3 at levels noted above.

7.6 Documentation

Seller shall ensure that appropriate documentation is prepared and, if required, signed by the appropriate person(s). The shipping documentation shall accurately reflect specific traceability to the items being shipped. Drawings (wiring diagrams), showing external terminations for Buyer use to connect to Seller provided instrumentation, shall be marked with the Buyer's instrument tag numbers.

8 Quality Assurance

The quality assurance program requirements of this specification are those specified in ASME-NQA-1 marked as applicable in Supplier Quality Assurance Program Requirements (SQAPR) Data Sheet attached to the material requisition, those specified in Part 2.2 of ASME NQA-2, QA

Requirements for Packaging, Shipping, Receiving, Storage and Handling of Items for Nuclear Power Plants, and those specified in 24590-WTP-3PS-G000-T0001.

8.1 QA requirements specific to item(s) or service

8.1.1 The supplier shall have in place a QA program meeting general specification 24590-WTP-3PS-G000-T0001 and all the requirements of ASME NQA-1 and ASME NQA-2 marked as applicable in SQAPR Data Sheet. The supplier shall submit his QA manual with his bid.

8.1.2 The successful bidder must pass a pre-award survey by the Buyer. Supplier shall demonstrate that their quality program is in compliance with the procurement quality requirements listed in SQAPR Data Sheet. The Supplier shall allow Bechtel, its agent, and DOE access to their facility and any lower tier subcontractor's facility and records pertaining to this purchase order for the purpose of QA Audits and Surveillance at mutually agreed times.

8.1.3 All items shall be manufactured in accordance with the Sellers' Quality Assurance Program that has been previously evaluated and accepted by the WTP Quality Assurance Organization. The very same requirements shall be passed down to any lower tier subsupplier.

8.1.4 Supplier shall submit their QA program and work plan to Buyer for review prior to commencement of work. The plan shall include documents and procedures to implement the work and include a matrix of essential Quality Assurance elements cross-referenced with the documents/procedures.

8.2 Supplier Deviation

8.2.1 Each supplier shall be required to identify and promptly document all deviations from the requirements of the procuring documents. In addition, the supplier shall be required to describe the recommended disposition based on appropriate analysis. Submittals of request for deviations from lower-tier suppliers shall be through the prime supplier to WTP.

8.2.2 Supplier-proposed deviations from procurement documents shall be initiated by use of Supplier Deviation Disposition Request (SDDR) form.

9 Configuration Management

Equipment and or components covered by this specification are identified with Components Identification System numbers shown in Blower Data Sheets. Each item is identified in accordance with Section 7.4, Tagging.

10 Documentation and Submittals

10.1 General

Seller shall submit to Buyer Engineering and Quality Verification documents in the forms and quantities shown in Form G-321-E, *Engineering Document Requirement*, and Form G-321-V, *Quality Verification Document Requirements*, attached to the MR.

10.2 Submittals

The Seller shall submit the following:

10.2.1 Drawings

Drawings shall show the following information:

10.2.1.1 The outline dimensions of blower, including outline and detail drawings for each component (ASDs, etc). These drawings shall reflect the "as-shipped" configuration of the equipment and instrumentation.

10.2.1.2 Details of construction.

10.2.1.3 Mounting dimensions and information required for the design of supports and foundations, including any special assembly instructions.

10.2.1.4 Operating weights of blower assembly including motor as well as adjustable speed drive components.

10.2.1.5 The space required for the removal of components.

10.2.1.6 The locations of access doors.

10.2.1.7 The weight of individual components.

10.2.1.8 The locations and identification of parts that are included in the parts list.

10.2.1.9 Wiring and schematic diagrams. Diagrams shall include wire gauges and fuse sizes applicable to the supplied units only.

10.2.1.10 The ASTM or equivalent designation for materials.

10.2.2 Procedures

Procedures shall include:

10.2.2.1 Welding procedures

10.2.2.2 Procedures for repairs of rejected items or parts.

10.2.2.3 Electrical component performance test procedures

10.2.2.4 Seller's shipping preparation procedures.

10.2.2.5 Test procedures for blower performance.

10.2.3 Inspection and Test Reports

10.2.3.1 Records of repairs of rejected items or parts.

10.2.3.2 Electrical component performance test reports

10.2.3.3 Blower performance test reports, including blower curves

10.2.3.4 Sound power levels

10.2.3.5 Blower wheel/shaft vibration test reports

10.2.4 Calculations

Seismic analysis/calculations shall be submitted for Buyer's review and permission to proceed.

10.2.5 Manuals

Manuals and instructions shall include:

10.2.5.1 Erection and installation manuals which provide complete, detailed procedures for installing and placing equipment in initial operation. The manuals shall include all erection and installation drawings.

10.2.5.2 Operation and maintenance manuals which provide complete, detailed descriptions of components and accessories with data sheets showing design, construction and performance data for equipment. Manuals shall include drawings required for operation, maintenance and repair, maintenance requirements, instructions and operational troubleshooting guides. All manuals/drawings shall include OEM part numbers.

10.2.5.3 Instruction manuals shall cover every item purchased, including those obtained from a subcontractor. The Seller shall obtain such manuals and lists, and submit them to the Buyer.

10.2.5.4 The Seller shall provide instructions regarding site long and short term storage, and preparation and protection of equipment after installation and prior to operation.

10.2.5.5 Where manuals include information applicable to several components, sizes or models, non-applicable information shall be lined-out.

10.2.6 Certificates of Conformance

10.2.6.1 Seller shall provide Certificates of Conformance demonstrating compliance with all applicable standards, specifications, and drawings.

10.2.6.2 Seller shall certify lifting eyes or lugs and/or spreader bars are suitable for the safe, balanced lifting, and handling of the equipment.

10.2.7 Schedules

Lists and schedules shall include:

10.2.7.1 Schedule of engineering, fabrication, and testing.

10.2.7.2 Parts list, and cost for parts and items subject to deterioration and replacement. Seller to state shelf life and storage requirements for spare parts.

10.2.7.3 List of recommended spare parts.

10.2.8 Materials Certificates

Material Certification for components of the blowers shall be submitted as noted in Paragraphs 4.1.1, 4.1.2 and 4.1.3.

10.2.9 Data

Data shall include:

10.2.9.1 Buyer's data sheet, completely filled out by the Seller, showing all information required to determine that the units are of the design and materials specified herein, including motor and ASD data sheets.

10.2.9.2 Acoustic data report. Sound test data from similar equipment previously tested can be submitted in lieu of test for the purchased equipment.

Appendix A
Noise Requirements for Fans and Blowers

1.0 SCOPE

This Appendix to the specification covers noise requirements for blowers, including all motors, equipment, and sub-systems furnished by the Supplier.

2.0 PERMISSIBLE NOISE LEVELS

The noise limit applies to operation of the Equipment at rated load or full capacity, and during restart and shut down. When the Equipment or a sub-system is operated cyclically or intermittently, the noise limits apply during all portions of the cycle.

The A-weighted noise level at 3 feet from the surface of the blower casing shall not exceed 85 dBA. The limit applies on each of four sides of the blower at the elevation of the centerline of the blower, but no less than 3 feet above grade or the platform upon which the blower is mounted. All noise limits apply to each blower system taken as a whole, and as installed.

If the Supplier cannot meet the required A-weighted limit, even in a free field, the Supplier shall provide the A-weighted level that they can and will guarantee. Estimated octave-band and A-weighted sound power levels of the blower inlet/discharge shall be provided.

ISSUED BY
RPP-WTP PDC

R10384191

RIVER PROTECTION PROJECT – WASTE TREATMENT PLANT

ENGINEERING SPECIFICATION

FOR

Thermal Catalytic Oxidizers/Reducers

This bound document contains a total of 38 sheets.

Content applicable to ALARA? ☐ **Yes** ☒ **No**

ADR No.
N/A

Rev

NOTE: Contents of this document are Dangerous Waste Permit affecting.

Quality Designator
QL
DOE Contract No. DE-AC27-01RV14136

REV	DATE	REASON FOR REVISION	BY	CHECK	REVIEW	QA	APEM/DEM
0	9/26/04	Issued for Permitting Use				N/A	

SPECIFICATION No. 24590-WTP-3PS-MBTV-TP001 **Rev** 0

Notice

Please note that source, special nuclear, and byproduct materials, as defined in the Atomic Energy Act of 1954 (AEA), are regulated at the US Department of Energy (DOE) facilities exclusively by DOE acting pursuant to its AEA authority. DOE asserts, that pursuant to the AEA, it has sole and exclusive responsibility and authority to regulate source, special nuclear, and byproduct materials at DOE-owned nuclear facilities. Information contained herein on radionuclides is provided for process description purposes only.

Contents

1 Scope 1
1.1 Project Description and Location 1
1.2 Equipment, Material, and Services Required 1
1.3 Work by Others 3
1.4 Acronyms 4
1.5 Definitions 5
1.6 Safety/Quality Classifications 6
2 Applicable Documents 6
2.1 General 6
2.2 Industry Standards 7
2.3 Reference Documents/Drawings 7
3 Design Requirements 9
3.1 General 9
3.2 Offgas Treatment System Description 10
3.3 Basic Function 11
3.4 Performance 11
3.5 Design Conditions 12
3.6 Environmental Conditions 13
3.7 Mechanical Requirements 13
3.8 Loadings 14
3.9 Electrical Requirements 15
3.10 Instrumentation and Control Requirements 16
3.11 Lifting Requirements 18
3.12 Thermal Analysis Requirements 18
3.13 Thermal Catalytic Oxidizer/Reducer Design Analysis Requirements 20
3.14 Accessibility and Maintenance 20
4 Materials 21
4.1 General 21
4.2 Construction 21
4.3 Prohibited Materials 21
4.4 Insulation 22
5 Fabrication 23
5.1 General 23
5.2 Welding 24

5.3 Painting 25
5.4 Assembly 25
6 Tests and Inspections 26
6.1 General 26
6.2 Personnel Qualifications 26
6.3 Non-Destructive Examinations 27
6.4 Shop Tests 27
6.5 Site Tests 28
7 Preparation for Shipment 28
7.1 General 28
7.2 Tagging 28
7.3 Documentation 29
8 Quality Assurance 29
8.1 General Requirements 29
8.2 Quality (Q) Related Components 29
8.3 Supplier Deviation 30
9 Configuration Management 30
10 Documentation and Submittals 30
10.1 General 30
10.2 Submittals 30

Figures

Figure 1 - Thermal Catalytic Oxidizer/Reducer Schematic 34

1 Scope

1.1 Project Description and Location

The Hanford Tank Waste Treatment and Immobilization Plant (WTP) is a complex of waste treatment facilities where the Department of Energy's (DOE) Hanford site tank waste will be pretreated and immobilized into stable glass form via vitrification. The WTP Contractor will design, build, and start up the WTP pretreatment and vitrification facilities for the US Department of Energy's (DOE) Office of River Protection (ORP). The waste treatment facilities will pretreat and immobilize the Low-Activity Waste (LAW) and High-Level Waste (HLW) currently stored in underground storage tanks at the Hanford Site.

The Hanford Site occupies an area of about 560 square miles and is located along the Columbia River, north of the city of Richland. The WTP Facility will be constructed at the East End of the 200 East Area of the Hanford Site. Benton, Franklin, and Grant counties surround the Hanford Site.

1.2 Equipment, Material, and Services Required

This specification provides the requirements for the design, analysis, materials selection, appurtenances selection, project management, quality control, quality assurance, inspection, fabrication, testing and labeling LAW and HLW Thermal Catalytic Oxidizers/Reducers.

The scope of work for the Seller includes all work specifically defined in this specification and its addenda and attachments. Work shall include, but is not limited to, the following:

1.2.1 Low Activity Waste: Thermal Catalytic Oxidizer/Reducer. Equipment shall be complete with recuperative heat exchanger, electric heater, oxidation catalysts, NO_X Selective Catalytic Reduction (SCR) unit, instrumentation and controls, housings, ducts and appurtenances necessary for a complete and functional system as specified in the LAW Mechanical Data Sheet (MDS) in section 2 of the Material Requisition (MR).

1.2.2 High Level Waste: Thermal Catalytic Oxidizer/Reducers. Equipment shall be complete with recuperative heat exchanger, electric heater, oxidation catalysts, NO_X Selective Catalytic Reduction unit (SCR), instrumentation and controls, housings, and appurtenances necessary for a complete and functional system as specified in the HLW Mechanical Data Sheets (MDS) in section 2 of the Material Requisition (MR).

1.2.3 Due to the complexity of the following codes and their application, provide the Buyer with a breakdown (by paragraph) of the following codes, industry standards, and referenced documents to be applied to each aspect of the Thermal Catalytic Oxidizer/Reducer detailed design, drawings, analysis, fabrication, quality assurance, inspection, testing, qualification, labeling, packaging, handling, and shipment for review prior to beginning the detailed design:

- ASME AG-1

- ASME AG-1a
- ASME N509
- ASME B&PVC, Section VIII, Div. 1

If an entire section or part of the above listed codes and standards applies, a breakdown by paragraph is not required. Only the part or section shall be listed.

1.2.4 Provide an analysis from a Thermal Catalytic Oxidizer/Reducer expert of the design to determine expected catalyst changeout frequency.

1.2.5 In addition to the field testing requirements set forth in ASME AG-1, Section TA, and/or ASME N509, Section 9, conduct the following acceptance tests in the shop, on each Thermal Catalytic Oxidizer/Reducer, prior to shipment:

- Visual Inspection
- Structural Capability/Pressure Leak Test
- System Bypass Test
- Differential Pressure Test
- Airflow Distribution Test

1.2.6 Provide shim pack for each point the Thermal Catalytic Oxidizers/Reducers support frames are supported and/or attached to Buyer's foundation embed plates. Each shim pack shall include one (1) 0.25 inch shim and two (2) 0.125 inch, 0.0625 inch, 0.040 inch, 0.010 inch, and 0.005 inch shims.

1.2.7 Provide Challenge Gas and Challenge Gas injection and sampling ports/manifolds for shop and field testing.

1.2.8 Provide all piping connections for Challenge Gas injection and sampling, pressure drop indication, pressure testing, leak testing, air flow distribution testing, and bypass testing required per this specification and its addenda and attachments.

1.2.9 Provide a detailed bag-in/bag-out procedure for removal and replacement of catalyst cartridges.

1.2.10 Provide all personnel, equipment, apparatus, labor, Personnel Protection Equipment (PPE), materials, special tools, glovebags, bags, (HEPA) filters, etc. to simulate field conditions for the bag-in/bag-out procedure.

1.2.11 Provide certified material test reports, welding procedures, welder qualifications, insulation installation procedures, surface preparation and coating procedures, testing procedures, testing results, quality assurance procedures (QAP), quality assurance inspection results, and all other procedures and documentation required per this specification and its addenda and attachments.

1.2.12 Provide transportation, storage, and installation instructions for the Thermal Catalytic Oxidizers/Reducers per manufacturer's recommendation and this specification.

1.2.13 Provide packaging and prepare the Thermal Catalytic Oxidizer/Reducers, maintenance platforms, shim pack, gaskets, special tools, and catalyst bed for shipment to the WTP site. Packaging shall be sufficient to allow outdoor storage for a period of up to 6 months at the WTP site, without Buyer action except routine inspection. Environmental conditions for storage are found in section 3.6 of this specification. Seller shall provide specific guidelines for storage beyond 6 months.

1.2.14 Provide special tools required for installation and maintenance.

1.2.15 Provide Material Safety Data Sheets (MSDSs) for the catalyst cartridges and all other materials used in the construction and testing of the Thermal Catalytic Oxidizers/Reducers.

1.2.16 Provide a thermal analysis of the Thermal Catalytic Oxidizer/Reducer, and support frame in accordance with the requirements of this specification and MDSs in section 2 of the Material Requisition (MR). Select insulation material (i.e. calcium silicate, refractory brick, mineral wool, etc.) to meet thermal requirements of this specification.

1.2.17 Provide detailed installation procedure for insulation, complete with design drawings and insulation map.

1.2.18 Provide a seismic analysis of the Thermal Catalytic Oxidizer/Reducer in accordance with the requirements of this specification.

1.2.19 Provide shop painting of carbon steel surfaces.

1.2.20 Provide an equipment reliability assessment for all major components and subcomponents including expected catalyst life of the Thermal Catalytic Oxidizers/Reducers. The definition of components and sub-components is at Seller's discretion.

1.3 Work by Others

Specific activities and materials excluded from the scope of this specification include:

1.3.1 Shipping to WTP jobsite

1.3.2 Material unloading and storage at jobsite

1.3.3 Installation labor

1.3.4 Foundation embeds and anchor bolts

1.3.5 Inlet and outlet pipe external to the unit

1.3.6 Expansion joints for Buyer connections on inlet and outlet

1.3.7 Anhydrous ammonia vapor supply to skid connection

1.3.8 Electric power supply

1.3.9 Off skid external wiring

1.3.10 External connection to Buyer's instrumentation and controls

1.3.11 Insulation required per Sellers thermal analysis and design

1.4 Acronyms

ASME American Society of Mechanical Engineers

ASTM American Society for Testing and Materials

AWS American Welding Society

DBE Design Basis Earthquake

DRE Destruction Removal Efficiency

FFB Foundation® Fieldbus

FMEA Failure Mode and Effects Analysis

HEPA High Efficiency Particulate Filter

HLW High Level Waste

LAW Low Activity Waste

MACT Maximum Achievable Control Technology

MDS Mechanical Data Sheet

MR Material Requisition

MSDS Material Safety Data Sheet

MTBF Mean-Time Between Failure

NACE National Association of Corrosion Engineers

NDE Non-Destruction Examination

NEMA National Electrical Manufacturers Association

NFPA National Fire Protection Association

NOx Nitrogen Oxides

PIP Process Industry Practices

PMI	Positive Material Identification
PPE	Personnel Protection Equipment
PQR	Procedure Qualification Record
QAP	Quality Assurance Program
QL	Quality Level
RPP	River Protection Project
RRC	Risk Reduction Class
SCR	Selective Catalytic Reduction
SDC	Safety Design Class
SDDR	Supplier Deviation Disposition Request
SDS	Safety Design Significant
SSCs	Systems, Structures, and Components
SVOCs	Semi-Volatile Organic Compounds
TCO	Thermal Catalytic Oxidizer
UL	Underwriters Laboratories, Inc.
VOCs	Volatile Organic Compounds
WPS	Welding Procedure Specification
WTP	Hanford Tank Waste Treatment and Immobilization Plant

1.5 Definitions

The equipment covered by this specification will be used in the WTP, where the definitions of confinement zones are:

Bag-in/Bag-out: A method of introducing and removing items from a radiological or contaminated enclosure that prevents the spread of contamination.

Challenge Gas: A gas of known characteristics, under specified conditions, used for the purpose of testing. For in-shop and in-place/field testing of Thermal Catalytic Oxidizers/Reducers required by this specification. The Challenge Gas to be used shall depend on what is recommended by the Thermal Catalytic Oxidizer/Reducer manufacturer. Challenge Gas shall be an environmentally safe non-ozone depleting substance, if possible.

Glovebag: A temporary barrier to contain or prevent the spread of radiological or contamination generally during system maintenance. The area or component is surrounded by the portable glovebox boundary material, usually a flexible plastic film. Personnel perform work inside the glovebag through glovesleeves and gloves while remaining outside the containment area. Other access ports are provided to allow for equipment and service penetrations as necessary. Additional openings can be provided through the use of zippers, velcro closures, and bag-out ports.

Quality Level (QL): The quality level identifies the quality requirements to be applied to the equipment. The identified quality levels are QL-1, QL-2, QL-3, QL-4, AP (Air Permit), and CM (Commercial). Quality requirements are specifically defined on the associated MDSs and supplier QAP requirements data sheets.

Seismic Category (SC): Specific requirements for each seismic category are defined in reference documents listed in section 2.3 of this specification.

Thermal Catalytic Oxidizer/Reducer Expert: One who has extensive knowledge regarding the characteristics and application of Thermal Catalytic Oxidizers/Reducers. Must have a minimum of five (5) years experience.

1.6 Safety/Quality Classifications

1.6.1 Refer to the MDS in section 2 of the MR for Safety Class, Quality Level and Seismic Category classifications related to the LAW Thermal Catalytic Oxidizer/Reducer. Quality Level shall apply only to the structural components (confinement boundary) and internal piping of the LAW Thermal Catalytic Oxidizer/Reducer.

1.6.2 Refer to the MDS in section 2 of the MR for Safety Class, Quality Level and Seismic Category classifications related to the HLW Thermal Catalytic Oxidizer/Reducer. Quality Level shall apply only to the structural components (confinement boundary) and internal piping of the HLW Thermal Catalytic Oxidizer/Reducer.

2 Applicable Documents

2.1 General

2.1.1 Work shall be done in accordance with the referenced codes, standards, and documents listed below, which are an integral part of this specification.

2.1.2 When specific chapters, sections, parts, or paragraphs are listed following a code, industry standard, or reference document, only those chapters, sections, parts, or paragraphs of the document are applicable and shall be applied. If a date or revision is not listed in section 2, the Seller shall apply the latest issue, including addenda, at the time of request for quote. The dates and revisions listed in section 2 shall apply to all subsequent references to codes and standards within this specification. When more than one code, standard, or referenced document

covers the same topic, the requirements for all must be met with the most stringent governing.

2.2 Industry Standards

2.2.1 ASME AG-1-1997, Code on Nuclear Air and Gas Treatment

2.2.2 ASME AG-1a-2000, Addenda to ASME AG-1-1997 Code on Nuclear Air and Gas Treatment, Section HA

2.2.3 ASME N509 – 1989, Nuclear power Plant Air-Cleaning Units and Components

2.2.4 ASME N510 – 1989 (Rev. 1995), Testing of Nuclear Air Treatment Systems

2.2.5 ASME B31.3 – 1996, Process Piping Code

2.2.6 ASME B & PV, Section VIII, Rules for Construction of Pressure Vessels

2.2.7 ASME NQA-1-1989, Quality Assurance Requirements for Nuclear Facility Applications

2.2.8 ASME Y14.100, Engineering Drawing Practices

2.2.9 ASTM – E84, Surface Burning Characteristics of Building Materials

2.2.10 ASTM - A240, Heat-Resisting Chromium and Chromium-Nickel Stainless Steel Plate, Sheet, and Strip for Pressure Vessels

2.2.11 AWS D1.6, Structural Welding Code, Stainless Steel

2.2.12 NACE Standard RP0198 – Control of Corrosion Under Thermal Insulation and Fireproofing Materials

2.2.13 NEMA 250, Enclosures for Electrical Equipment

2.2.14 NFPA 70 – 1999, National Electric Code

2.2.15 NFPA 497, Recommended Practice for Classification of Hazardous Locations for Electrical Installations in Chemical Process Areas

2.2.16 PIP INIH 1000 – Hot Insulation Installation Details

2.2.17 UL 467, Standard for Safety Grounding and Bonding Equipment

2.2.18 UL 508, Standard for Safety Electric Industrial Control Equipment

2.3 Reference Documents/Drawings

2.3.1 24590-WTP-3PS-AFPS-T0001, Engineering Specification for Shop Applied Special Protective Coating for Steel Items and Equipment.

2.3.2 24590-WTP-3PS-G000-T0001, General Specification for Supplier Quality Assurance Program Requirements

2.3.3 24590-WTP-3PS-G000-TP002, General Specification for Positive Material Identification (PMI)

2.3.4 24590-WTP-3PS-G000-T0003, Engineering Specification for Packaging, Handling and Storage Requirements

2.3.5 24590-WTP-3PS-JQ07-T0001, Engineering Specification for Instrumentation for Package Systems

2.3.6 24590-WTP-3PS-EKP0-T0001, Engineering Specification for Electrical Requirements for Packaged Equipment

2.3.7 24590-WTP-3PS-MUMI-T0002, Engineering Specification for Low Voltage Induction Motors

2.3.8 24590-WTP-3PS-NN00-T0001, Engineering Specification for Hot and Anti-Sweat Thermal Insulation

2.3.9 24590-WTP-3PS-PS02-T0001, Engineering Specification for Shop Fabrication of Piping.

2.3.10 24590-WTP-3PS-SS00-T0001, Engineering Specification for Welding of Carbon Structural Steel

2.3.11 24590-WTP-3PS-SS00-T0002, General Specification for Welding of Structural Stainless Steel and Welding of Structural Carbon Steel to Structural Stainless Steel

2.3.12 24590-WTP-3PS-FB01-T0001, Engineering Specification for Structural Design Loads for Seismic Category III & IV Equipment and Tanks

2.3.13 24590-WTP-3PS-NWP0-T0001 Engineering Specification for General Welding and NDE Requirements for Supplier Fabricated Piping

2.3.14 24590-WTP-3PS-JA03-T0001, Engineering Specification for Gas Analyzers

2.3.15 24590-WTP-3PS-MV00-TP001, Engineering Specification for Pressure Vessel Design and Fabrication

2.3.16 24590-WTP-PER-PL-02-001, Piping Material Class Description

3 Design Requirements

3.1 General

3.1.1 The Thermal Catalytic Oxidizers/Reducers shall be designed per this specification, the applicable documents listed in section 2 of this specification, and the MDSs in section 2 of the MR.

3.1.2 The WTP facility is designed for a minimum service life of 40 years. Structural and pressure boundary components related to the Thermal Catalytic Oxidizer/Reducer shall be engineered with a design life of 40 years. Catalyst used in the Thermal Catalytic Oxidizers/Reducers shall have a minimum design life of one year. Other mechanical components shall have a minimum service life of five years with periodic maintenance. Components that cannot be guaranteed for a minimum service life of five years shall be identified in accordance with the following requirements:

- Failure rate or Mean-Time Between Failure (MTBF), whichever is available, and the basis for the rate including specific references to any sources.
- Estimated modes of failure (example, dielectric breakdown, element overheat, etc.). This may be delineated in a Failure Mode and Effects Analysis (FMEA). The method used to perform the FMEA (Example, MIL-STD-1629) and the year shall be specified. All assumptions used to perform the FMEA shall be clearly stated.
- Recommended maintenance and frequency, as applicable.
- Estimated time to perform the recommended maintenance, as applicable.

The data above shall be based on the physical and environmental conditions delineated in this specification and MDSs. Where possible, the Seller shall compare the figures for the equipment in this specification to similar equipment sold and serviced by the Seller. The source for all estimates and any underlying assumptions shall be stated. If software is used to perform the FMEA, the Seller shall specify the software used and the version (example software, Relex, Isogen, Reliasoft, etc.).

3.1.3 Operation of the Thermal Catalytic Oxidizers/Reducers shall be 8760 hours per year. Refer to MDSs in section 2 of the MR for thermal cyclic conditions.

3.1.4 The thermal and seismic analyses to be provided per this specification must verify that the final detailed design of the Thermal Catalytic Oxidizers/Reducers meet the requirements set forth in this specification and its addenda and attachments.

3.1.5 The maximum pressure drops across the Thermal Catalytic Oxidizers/Reducers shall be in accordance with the requirements of the MDSs.

3.1.6 Pressure boundary shall be designed in accordance with the requirements of ASME B&PVC, Section VIII, Div. 1. **Code stamp is not required**. Internal crevices and square angles shall be avoided where particulates can accumulate.

3.1.7 Penetrations in the pressure boundary (i.e. access doors, samples ports, etc.) shall be designed and reinforced in accordance with the requirements of ASME B&PVC, Section VIII, Div. 1 and ASME AG-1, section SA-4430. In addition, access doors shall be designed for ease of operation by one person.

3.1.8 If determined necessary by thermal analysis, Seller shall design the Thermal Catalytic Oxidizers/Reducers to be externally insulated so the external surface temperature does not exceed 140°F. Internal or external insulation shall meet applicable requirements of Buyer specification 24590-WTP-3PS-NN00-T0001 *Engineering Specification for Hot and Anti-Sweat Thermal Insulation.*

3.1.9 Permanent joints and seams shall be continuously welded construction, suitably stiffened, with stiffeners mounted on the outside of the ducts. Internal bracing shall be minimized. Where internal bracing is required, bracing members shall be of circular cross section.

3.1.10 The LAW Thermal Catalytic Oxidizer/Reducer shall be provided with a heat exchanger bypass (refer to section 3.10.5 of this specification). The bypass shall be located within the size envelope specified in the LAW Mechanical Data Sheet.

3.1.11 Interface connections between housings shall be made with expansion joints, as necessary per thermal ananlysis. Expansion joints shall be fabricated in one piece and shall be capable of absorbing all imposed deflections. The maximum surface temperature of the Thermal Catalytic Oxidizers/Reducers with potential for personnel exposure shall not exceed 140 °F.

3.1.12 The Seller shall select insulation and design the Thermal Catalytic Oxidizers/Reducers and support frame to prevent the Buyer's concrete foundation from exposure to an average temperature of 100 °F under and within three feet of the skid boundary.

3.2 Offgas Treatment System Description

Offgas is generated from the vitrification of radioactive waste in Joule heated ceramic melters.

3.2.1 LAW Thermal Catalytic Oxidizer/Selective Catalytic Reduction Unit:

The feed to the LAW Thermal Catalytic Oxidizer/Reducer is primary melter offgas that has been treated by a Submerged Bed Scrubber, Wet Electrostatic Precipitator, HEPA Filters and an Activated Carbon Bed Adsorber.

3.2.2 HLW Thermal Catalytic Oxidizer/Selective Catalytic Reduction Unit:

The feed to the HLW Thermal Catalytic Oxidizer/Reducer is primary melter offgas that has been treated by a Submerged Bed Scrubber, Wet Electrostatic Precipitator, High Efficiency Mist Eliminator, HEPA Filters, Activated Carbon Bed Adsorber, and Silver Mordenite column.

3.3 Basic Function

Each Thermal Catalytic Oxidizer/Reducer unit shall consists of four primary components, a recuperative heat exchanger, electric heater, oxidation catalyst bed, and NO_X selective catalyst reduction bed. (refer to Figure 1 for clarification) The rating of each component shall be determined by the Seller to meet the performance requirements specified in Section 3.4 of this specification. Seller shall also include ammonia dilution and mixing appurtenances necessary to meet performance requirements of this specification.

3.3.1 Recuperative Heat Exchanger

The recuperative heat exchanger is primarily employed to recover heat from the SCR hot exhaust gas for the Thermal Catalytic Oxidation/Reducer unit. The heat exchanger shall cool down the hot SCR exhaust gas and heat the incoming offgas.

3.3.2 Electric Heater

The electric heater is employed to heat the offgas feed to the final desired Volatile Organic Compound (VOC) oxidation and NO_X reduction temperature.

3.3.3 Oxidation Catalyst

The oxidation catalyst will oxidize volatile and semi-volatile organic compounds creating water and carbon dioxide. The residence time and number of catalyst beds shall be determined by the Seller to meet the performance specified in Section 3.4 of this specification.

3.3.4 NO_X Selective Catalytic Reduction Unit

The SCR will reduce the NO_X to Nitrogen and water through catalytic reaction with ammonia.

The Buyer will supply anhydrous ammonia to the LAW and HLW SCRs. The LAW and HLW SCRs shall use direct anhydrous ammonia injection to reduce NO_X in the offgas stream. Seller shall specify dilution air flow rates and pressures if required for direct anhydrous ammonia injection system.

The residence time and number of catalyst beds shall be determined by the Seller to meet the performance specified in Section 3.4 of this specification.

3.3.5 Ammonia Dilution system

The ammonia dilution will use air to dilute the anhydrous ammonia for injection into the SCR. Seller shall supply necessary equipment required to meet performance requirements. (refer to Figure 1 for clarification)

3.4 Performance

3.4.1 Refer to the Thermal Catalytic Oxidizers/Reducers MDSs for design data and gas stream properties.

3.4.2 The organic Destruction Removal Efficiency (DRE) performance shall be based on inlet loadings specified in the MDSs.

3.4.3 The Thermal Catalytic Oxidizers/Reducers shall meet the DRE for VOCs and semi-volatile compounds (SVOCs) as required in the MDSs.

3.4.4 The NO_x SCR unit shall meet the reduction efficiency required in the MDSs.

3.4.5 Seller shall provide the outlet conditions for detection limits required to verify the Thermal Catalytic Oxidizers/Reducers guaranteed performance.

3.4.6 Seller shall provide curves plotting efficiency versus inlet temperature for the Thermal Catalytic Oxidizer and Selective Catalytic Reducer catalyst.

3.4.7 Seller shall provide NH_3 slip curves for SCR performance.

3.4.8 Dioxin and furan emissions at the outlet of the Thermal Catalytic Oxidizers/Reducers in LAW and HLW shall meet the Maximum Achievable Control Technology (MACT) criteria of 0.2 ng/m^3 TEQ (Toxic Equivalent).

3.4.9 The Recuperative Heat Exchangers for LAW and HLW shall have a 70 % thermal efficiency.

3.4.10 The ammonia slip exiting the LAW and HLW systems shall be specified by the Seller to meet the NO_x reduction efficiencies specified in section 3.4.4 of this specification.

3.5 Design Conditions

3.5.1 Refer to the Thermal Catalytic Oxidizers/Reducers MDSs in section 2 of the MR.

3.5.2 The Thermal Catalytic Oxidizers/Reducers shall be designed to meet Level C service limits as defined in ASME AG-1, paragraph AA-4214.

3.5.3 As required, approximately ½ inches of shim plates will be stacked at embed locations for leveling support frames. Once leveled, the following will be completed to anchor column support frames to Buyer's foundation:

- Shim plates will be field welded together
- Support frames will be field welded to shim plates
- Shim plates will be field welded to embed plates

3.5.4 Support frame and appurtenances for the HLW Thermal Catalytic Oxidizers/Reducers shall not come in contact with foundation concrete. The support frame and appurtenances for the LAW Thermal Catalytic Oxidizer/Reducer may come in contact with foundation concrete.

3.6 Environmental Conditions

3.6.1 The Thermal Catalytic Oxidizers/Reducers will be located indoors in rooms maintained between 59°F dry-bulb minimum and 95°F dry-bulb maximum temperature during normal operation. Radiation exposure is targeted to be 2.5 mRad/hr.

3.6.2 Thermal Catalytic Oxidizers/Reducers and components, except catalysts, may be stored outdoors prior to installation at ambient extreme temperatures ranging from minus 23°F dry-bulb to 113°F dry-bulb and a relative humidity of 0 to 100%.

3.7 Mechanical Requirements

3.7.1 General

3.7.1.1 Due to access restrictions for installation, the Thermal Catalytic Oxidizer/Reducer units shall be fabricated in such a manner that will allow delivery in three to five sections that comply with the bounding dimensions specified in MDSs. Each section of the Thermal Catalytic Oxidizer/Reducer shall be skid mounted. Final assembly shall be welded.

3.7.1.2 The catalyst bed shall be designed for manual removal and replacement. The catalyst bed shall be designed to meet service life requirements outlined in section 3.1.2 of this specification. The weight of a catalyst module shall not exceed 50 pounds for lifting manually. Buyer prefers side access for replacing the catalysts. If weights exceed 50 pounds lifting beans, or rigs shall be designed and supplied by the Seller.

3.7.1.3 Design and fabrication of ammonia piping shall be in accordance with ASME B31.3 and Buyer specification 24590-WTP-3PS-PS02-T0001, *Shop Fabrication of Piping*. Ammonia piping shall be 304L stainless steel. Piping and appurtenances shall be in accordance with Buyer specification 24590-WTP-PER-PL-02-001, *Piping Material Class Description*.

3.7.1.4 Seller shall provide transitions for connection to Buyer's piping. Inlet and outlet lines from the SCRs shall be piped to skid edge and flanged. All piping flanges required for connection to Buyer's piping shall be per ASME and have a minimum ASME class 150 rating.

3.7.1.5 If determined necessary by Seller, drain lines shall be welded to the housing at low points. Penetrations by drains shall be arranged and individually sealed so that catalysis beds cannot be bypassed. Drain line shall be piped to skid edge and flanged. Piping shall be designed and fabricated in accordance with ASME B31.3 and Buyer specification 24590-WTP-3PS-PS02-T0001 *Shop Fabrication of Piping*. Seller shall provide expected drain flow rates for each drain line.

3.7.1.6 The Seller shall provide test ports for injection and sampling. The Seller shall evaluate the design function of the equipment to determine where test ports are required. Test port penetrations shall be sealed with adjustable compression or gland-type seals that are valved and suitable for the service conditions defined in the MDSs and pressure requirements specified herein.

3.7.2 Recuperative Heat Exchanger

3.7.2.1 The heat exchangers shall be industrial design plate frame type construction. Unless otherwise specified the heat exchanger pressure boundary shall be designed in accordance with ASME B&PVC, Section VIII, Div.1. Materials shall be 316L stainless steel plates including inner casing. The heat exchanger shall be complete with internal expansion joints, thermal insulation and welded gas tight carbon steel outer casing.

3.7.2.2 Heat exchanger shall be designed to minimize the number of different types of plates unless an appreciable capital savings is realized.

3.7.2.3 Heat exchanger plates shall be designed for full differential pressure, with one side at the design pressure and the other side at atmospheric pressure.

3.7.2.4 Each heat exchanger plate shall be permanently marked to identify the type and orientation.

3.7.2.5 Heat exchanger gaskets, except between end plates and heads, shall be identical. Each gasket shall be molded of one piece. Nonglued gaskets are preferred.

3.7.2.6 Representative gaskets from each gasket production batch used in the heat exchanger shall be subjected to a hardness test, a compression set test, and a dimensional check prior to installation.

3.8 Loadings

3.8.1 The Thermal Catalytic Oxidizer/Reducer assemblies shall be self-supporting, capable of carrying the static loads of components and the stress imposed during shipment, installation, and operation.

3.8.2 The Thermal Catalytic Oxidizer/Reducer skids shall be designed in accordance with the requirements of Level C service limits as defined in ASME AG-1, article AA-4000 and specification 24590-WTP-3PS-FB01-T0001, *Structural Design Loads for Seismic Category III & IV Equipment and Tanks.*

3.8.3 The Seller shall provide a seismic analysis in accordance with section 3.8.2 of this specification. The Seller shall provide the documented results of the seismic analysis in report form to the Buyer. The report shall, at a minimum, include:

- definition of analysis objective
- identification of equipment for analysis
- general description of equipment supplemented by drawings and sketches
- functional requirements per this specification and its addenda and attachments
- purpose of analysis
- definition of design criteria and inputs with corresponding sources
- results of literature searches and other applicable background data
- applicable codes, standards, and reference documents per this specification broken down by chapter, section, and paragraph, as applicable
- analysis methodology
- description of computer(s) used to conduct analysis
- description of any software/computer programs used for modeling and any calculations required, including program name, program revision, description of program capabilities and limitations, justification for choice of program, and evidence and description of program validation method
- assumptions (indicate those that must be verified as the design proceeds)
- analyses conducted with results
- summary of analysis results
- conclusions
- location for Buyer review signatures

3.8.4 The Thermal Catalytic Oxidizer/Reducer units shall be designed in accordance with the nozzle load requirements as specified in the MDSs in section 2 of the MR.

3.9 Electrical Requirements

3.9.1 Electrical components and appurtenances furnished with the Thermal Catalytic Oxidizer/Reducer units shall conform to the requirements of specification 24590-WTP-3PS-EKP0-T0001, *Electrical Requirements for Packaged Equipment.* Electrical components shall also meet applicable sections of NFPA 70, and requirements outlined in NFPA 497.

3.9.2 Electric heaters shall be of the element type and mounted on removable flanged plates for ease of maintenance. Buyer will supply 480V electricity. If Seller's supplied heaters are rated for a lower voltage, Seller shall supply the necessary components to set the electricity down to the necessary voltage.

3.9.3 Electrical enclosures shall meet the requirements of NEMA 250.

3.9.4 The Thermal Catalytic Oxidizer/Reducer control panels shall be UL 508 listed and certified.

3.9.5 Drive motors shall conform to the requirements of specifications 24590-WTP-3PS-MUMI-T0002, *Low Voltage Induction Motors*. Motor rated horsepower shall not be exceeded by any operating condition that can be developed.

3.9.6 Seller shall complete and submit to the Buyer an Electrical Data Sheet for Low Voltage Induction Motor in accordance with specification 24590-WTP-3PS-MUMI-T0002, *Low Voltage Induction Motors*.

3.9.7 Seller shall provide a grounding lug or boss, in accordance with UL 467, on the equipment housing or frame to facilitate attachment of grounding cable by the Buyer.

3.9.8 Seller shall provide total electric load for each Thermal Catalytic Oxidizer/Reducer.

3.10 Instrumentation and Control Requirements

3.10.1 Instrumentation and controls furnished with the Thermal Catalytic Oxidizer/Reducer units shall meet the requirements of engineering specification 24590-WTP-3PS-JQ07-T0001, *Instrumentation for Package Systems*.

3.10.2 Analyzers furnished with the Thermal Catalytic Oxidizer/Reducer units shall meet the requirements of engineering specification 24590-WTP-3PS-JA03-T0001, *Gas Analyzers*.

3.10.3 The output of permanently installed analyzers is preferred to be Foundation® Fieldbus (FFB) compatible. If FFB output is not compatible with Seller's control system, Seller shall ensure the interface requirements of engineering specification 24590-WTP-3PS-JQ07-T0001, *Engineering Specification Instrumentation for Package System*, are met to monitor analyzers.

3.10.4 The following Instruments shall be included with the Thermal Catalytic Oxidizer/Reducer units as a minimum, with exception to pressure drop instruments, which may be differential pressure instruments (refer to Figure 1 for additional information):

- Inlet flowmeter instrument
- Inlet NOx analyzer
- Pressure instrument after the recuperative heat exchanger
- Temperature element after the recuperative heat exchanger
- Electric heater power controller
- Pressure instrument at the inlet of the oxidation catalyst
- Temperature element at the inlet of the oxidation catalyst
- Pressure instrument at the inlet of the NOx catalyst bed
- Temperature element at the inlet of the NOx catalyst bed
- Pressure instrument at the outlet of the NOx catalyst bed
- Temperature element at the outlet of the NOx catalyst bed

3.10.5 Seller shall provide two QL-2 thermowells for the LAW Thermal Catalytic Oxidizer/Reducer at the inlet of the SCR bed for Buyer's temperature instruments.

3.10.6 The following instruments shall be included with the anhydrous ammonia supply and dilution equipment as a minimum (refer to Figure 1 for additional information):

- Anhydrous ammonia flowmeter instrument
- Anhydrous ammonia flow control valve
- Dilution air pressure instrument
- Dilution air flow control and shut off valve
- Pressure instrument at the outlet of the mixer
- QL-2 actuated shut off valve at the outlet of the mixer

3.10.7 Anhydrous ammonia dilution equipment and/or inlet air feed for dilution fans may be located separately from the Thermal Catalytic Oxidizer/Reducer units. Seller shall work closely with Buyer in the design of any connecting pipe work necessary to meet performance requirements.

3.11 Lifting Requirements

3.11.1 Lifting lugs for each component shall be installed on the Thermal Catalytic Oxidizers/Reducers skid packages for balanced lifting and handling. Seller shall identify the weight and center of gravity of each package. All lifting points shall be designed in accordance with the requirements of Buyer specification 24590-WTP-3PS-G000-T0003, *General Specification for Packaging, Handling, and Storage Requirements.*

3.11.2 Lifting eyes or lugs shall be certified to be suitable for the safe, balanced lifting, and handling of the equipment without distortion or damage to the components.

3.11.3 All lifting attachments shall have either a safety factor of three (3), based on material yield strength, or five (5), based on the material ultimate strength, whichever is more conservative. The lifting points and center of gravity shall have a label clearly identifying its safe working load.

3.11.4 Lifting lugs must accept standard commercial lifting equipment. Chain blocks or braiding shall not be permitted.

3.11.5 The lifting lugs for the packages must be accessible from the top, without removal of components or covers.

3.11.6 All lifting points shall be proof tested. Test and examination certificates shall be provided to the Buyer for review.

3.12 Thermal Analysis Requirements

3.12.1 Method of thermal analysis shall be proposed by the Seller.

3.12.2 Refer to MDS for thermal analysis technical information and heat loss requirements. (i.e. thermal conductivity values, room temperatures, etc.)

3.12.3 The thermal analysis shall include the effects of stresses resulting from potential variations in temperatures due to startup, normal operation, shutdowns, and thermal cycling of the Thermal Catalytic Oxidizer/Reducer. Analysis shall show that the Thermal Catalytic Oxidizers/Reducers are adequate for the design life specified in section 3.1.2 of this specification.

3.12.4 The thermal analysis shall include thermal expansion of the Thermal Catalytic Oxidizers/Reducers and resulting nozzle loadings in X, Y, and Z planes with deflections at normal operating conditions and design conditions.

3.12.5 The thermal analysis shall show that the design of the recuperative heat exchanger will effectively raise the inlet offgas to the required temperature for the Thermal Catalytic Oxidizer.

3.12.6 The thermal analysis shall determine the thickness and extent of insulation required on the sides, ends, top and bottom of the Thermal Catalytic Oxidizers/Reducers to ensure that the insulation jacket temperature and all exterior uninsulated portions with potential for personnel exposure, do not exceed 140 °F at maximum design temperature.

3.12.7 The thermal analysis shall determine the thickness and extent of insulation required on the bottom of the Thermal Catalytic Oxidizers/Reducers so that the temperature of the concrete does not exceed 100 °F.

3.12.8 The Seller shall provide the documented results of the thermal analysis in report form to the Buyer. The thermal analysis report shall provide a complete thermal analysis of the Thermal Catalytic Oxidizers/Reducers and shall include 3-D graphical results of models and all calculations performed, as applicable to the analysis approach chosen. The report shall, at a minimum, include:

- definition of analysis objective
- identification of equipment for analysis
- general description of equipment supplemented by drawings and sketches
- functional requirements per this specification and its addenda and attachments
- purpose of analysis
- definition of design criteria and inputs with corresponding sources
- results of literature searches and other applicable background data
- applicable codes, standards, and reference documents per this specification broken down by chapter, section, and paragraph, as applicable
- analysis methodology
- description of computer(s) used to conduct analysis
- description of any software/computer programs used for modeling and any calculations required, including program name, program revision, description of program capabilities and limitations, justification for choice of program, and evidence and description of program validation method
- assumptions (indicate those that must be verified as the design proceeds)
- analyses conducted with results
- summary of analysis results
- conclusions
- location for Buyer review signatures

3.12.9 All assumptions shall be plainly identified and data presented (including their uncertainty) with precise logic.

3.12.10 The final thermal analysis report shall convey information to several disciplines, many of whom may be less familiar with the general subject than the authors. Care shall be taken to use simple statements and expressions and to make statements as concise as possible. If highly technical terms are necessary, they shall be adequately explained and defined.

3.13 Thermal Catalytic Oxidizer/Reducer Design Analysis Requirements

3.13.1 The Seller shall conduct and submit separate Thermal Catalytic Oxidizer/Reducer design analyses for LAW and HLW units. The design analysis of the Thermal Catalytic Oxidizers/Reducers shall be conducted by an Thermal Catalytic Oxidizer/Reducer expert to determine the expected catalyst changeout frequency for the final Thermal Catalytic Oxidizer/Reducer design. Seller shall provide personnel qualifications to the Buyer for review.

3.13.2 Analysis shall be conducted considering operation of the Thermal Catalytic Oxidizers/Reducers at design conditions outlined in this specification and MDSs.

3.13.3 Analysis shall determine expected catalyst changeout frequency based on the gas composition and load information specified in the MDSs in section 2 of the MR.

3.13.4 The design analysis for expected catalyst changeout shall assume that the offgas flow through the Thermal Catalytic Oxidizers/Reducers may vary as much as ±10% from the design flowrate specified in the MDSs in section 2 of the MR.

3.13.5 The Seller shall provide the documented results of the Thermal Catalytic Oxidizer/Reducer analysis with any graphical results, as applicable, in report form to the Buyer prior to fabrication. The report shall follow the same requirements specified in 3.12.9 – 3.12.10.

3.14 Accessibility and Maintenance

3.14.1 Buyer's layout allows for necessary access and space requirements to facilitate maintenance during normal plant operation or scheduled shutdown.

3.14.2 Supplier's recommended accessibility and maintenance requirements for each piece of equipment shall be included in the Seller's design and shown on layout drawings. Side access for maintenance and replacement of the catalyst is preferred.

3.14.3 Seller shall provide access doors, hinged and gasketed in the housing complete with handles to allow inspection. Insulation shall be designed to allow access without excessive removal of adjacent insulation.

3.14.4 Seller shall provide instructions and frequency of maintenance including lubrication, rotation, heating, and any other type of preventative maintenance that will preserve the equipment until the time it is put into operation.

3.14.5 Frequency of inspection and maintenance intervals during operation shall be in accordance with equipment seller's recommendations.

4 Materials

4.1 General

Seller shall comply with specification 24590-WTP-3PS-G000-TP002, *Positive Material Identification (PMI)*. In accordance with the requirements of the PMI specification the Cr, Ni, Mo content of the pressure boundary materials including weld consumables must be verified before and after fabrication.

4.2 Construction

4.2.1 Materials of construction shall have properties suitable for the service conditions defined in the MDSs and conform to the requirements of ASME AG-1, SA-3000, Table SA-3400-1.

4.2.2 The ASME and/or ASTM material numbers and grades shall be identified and a "Manufacturer's Material Certificate of Compliance" shall be provided for the housing, ducts, weld filler metal, and support framing integral to the Thermal Catalytic Oxidizer/Reducer assembly. All material designations shall be indicated on the fabrication drawings and in the material lists.

4.2.3 Thermal Catalytic Oxidizer/Reducer skid shall be fabricated from structural steel shapes and plates properly reinforced to be self-supporting, capable of carrying the static loads of components and the stresses imposed during shipment, installation, and operation.

4.2.4 Thermal Catalytic Oxidizer/Reducer housings shall be fabricated from materials specified in the MDSs in section 2 of the MR. All seams shall be seal welded.

4.2.5 Access door gasket and seal pads shall meet requirements of ASME AG-1 Article SA-4420. Gaskets, seal pads, caulks, and adhesives used must be certified for contact with austenite stainless steel.

4.3 Prohibited Materials

4.3.1 Bronze, copper, lead, zinc, tin, antimony, cadmium, or other low melting point metals, their alloys, or materials containing such metals as their basic constituents or molybdenum, and halogens shall not be used in direct contact with stainless steel. This prohibition applies to use of tools, fixtures, paints, coatings and sealing compounds, and any other equipment or materials used by the Seller in handling, assembly and storage of stainless steel parts or components.

4.3.2 Asbestos shall not be used in any component of the Thermal Catalytic Oxidizers/Reducers and appurtenances.

4.4 Insulation

4.4.1 The Seller shall provide detailed insulation installation procedures complete with sketches showing methods and details for applying and securing insulation. Installation procedures and sketches shall include details related to applying and securing metal jacketing (if externally insulated), to the Thermal Catalytic Oxidizers/Reducers. The insulation procedures shall be in accordance with PIP INIH 1000 and NACE Standard RP0198, Buyer specification 24590-WTP-3PS-NN00-T0001 *Hot and Anti-Sweat Thermal Insulation,* and this specification. The insulation installation procedures shall be reviewed by the Buyer prior to commencement of work to install insulation on the Thermal Catalytic Oxidizers/Reducers.

4.4.2 Seller shall recommend cements, mastics, and adhesives that will be suitable for the maximum design temperature of the Thermal Catalytic Oxidizers/Reducers. The mixing of cements, mastics, etc., shall be done with deionized water.

4.4.3 All insulation, cements, mastics, and adhesives shall be certified for contact with austenitic stainless steel.

4.4.4 Surfaces to be insulated shall be dry and free of loose scale, dirt, and oil before the insulation is applied.

4.4.5 Provide for removable/replaceable insulation on flanges, manholes, doors, and access openings.

4.4.6 Insulation thicknesses greater than three (3) inches applied to the exterior of the Thermal Catalytic Oxidizers/Reducers shall be applied in multiple layers with staggered joints. Each layer of multiple layer and double insulation shall be held in place separately.

4.4.7 Exterior insulation shall be jacketed with 304 stainless steel. The stainless steel jacketing shall be 0.024 inch thick flat and smooth sheet, and conform to ASTM A240. The jacketing shall be furnished in the annealed or soft condition with a regular 2B mill finish and have a factory applied moisture barrier.

4.4.8 Design jacketing with an overlap of 2 inch minimum between sections. Standard process industry practices shall be followed.

4.4.9 Design stainless steel jacketing exposed edges to be machine-bent or rolled to eliminate sharp corners.

4.4.10 Seller shall design insulation holding materials using the following:

- 18-gage wire
- 0.025 inch x 0.75 inch wide straps (0.025 inch x 0.5 inch wide straps for 2 inch and smaller pipe)
- 1 inch hexagonal mesh netting (0.025 inch three-twist stainless steel 18-8 wire)
- wing seals

4.4.11 Securely fasten metal jacketing on flat surfaces of the Thermal Catalytic Oxidizers/Reducers on maximum 18 inch centers.

4.4.12 The use of screws as holding material for insulation shall not be permitted.

4.4.13 All insulation components, including facings, mastics, and adhesives, shall meet ASTM E84 fire hazard rating not to exceed 25 for flame spread and 50 for fuel contributed and smoke developed. Ratings used are determined by Underwriters Laboratories Inc. (UL).

5 Fabrication

5.1 General

5.1.1 Fabrication of the Thermal Catalytic Oxidizer/Reducer units shall be in accordance with the requirements of ASME AG-1, Article AA-6000, ASME AG-1a, Article HA-6000, and applicable documents listed in section 2 of this specification.

5.1.2 Fabrication of piping shall meet the requirements of Buyer specifications 24590-WTP-3PS-PS02-T0001 *Shop Fabrication of Piping*, 24590-WTP-3PS-NWP0-T0001 *General Welding and NDE Requirements for Supplier Fabricated Piping*, and ASME B31.3.

5.1.3 All tolerances, surface flatness, and finish requirements for assembly and fabrication shall be determined and specified by the Seller when completing the detailed design to meet performance requirements set forth in this specification and its addenda and attachments. At a minimum, all tolerances, surface flatness, and finish requirements shall be per all applicable codes, standards, and reference documents in section 2 of this specification.

5.1.4 Identification of fabrication methods shall be included in the detailed design of the Thermal Catalytic Oxidizers/Reducers.

5.2 Welding

5.2.1 Seller shall develop detailed welding, weld inspection, non-destructive examination (NDE), and weld repair procedures for fabrication of the Thermal Catalytic Oxidizers/Reducers and submit them to the Buyer for review prior to fabrication. Procedures shall include acceptance criteria. A review status of "Work May Proceed" must be obtained prior to use.

5.2.2 Applications of the welding procedures must be described adequately to allow verification of qualification and suitability for use. Application of a procedure to joint(s) may be indicated by means of description, tabulation, drawings or weld map. Material, thickness, joint type (e.g. butt) and extent (e.g. all around, pitch of 2 in 6, etc) must by included.

5.2.3 Welding Procedure Specifications (WPSs) shall be qualified in accordance with the requirements of the applicable AWS code. Personnel qualifications will be verified at the worksite.

5.2.4 It is not the Buyer's intent to require revisions to the Seller's standard WPSs to meet these requirements, yet the limitations must be clearly acknowledged, and the instructions must by employed by the welders during fabrication. To accommodate this, Sellers may revise WPSs or issue job-only amendments or addenda to standard WPSs. Any amendment or addenda shall become part of the WPS for the purchase order and shall be issued to the welders employed in the work.

5.2.5 A weld map or matrix linking Buyer requirements and Seller's application of WPSs shall be submitted with the WPS/PQRs for review.

5.2.6 All weld joints for pressure retaining applications shall have a minimum of two passes.

5.2.7 For repair of a weld, either the original WPS or one originally submitted as a designated repair WPS shall be used.

5.2.8 Repair plans that use welding for major repairs of welds or base metals shall be submitted for review prior to use. A repair plan shall include the following:

- The method of defining the type and extent of the defect.
- Methods used for removing the defect and the testing conducted to ensure that the defect has been removed.
- Welding procedure employed and NDE method used to inspect the completed repair.

5.2.9 Postweld heat treatment procedures including cleaning requirements, heating and cooling rates, thermocouple locations, type of heating equipment, etc. shall be submitted to the Buyer for review, as applicable.

5.2.10 Welding of carbon structural steel shall be in accordance with specification 24590-WTP-3PS-SS00-T0001, *Welding of Carbon Structural Steel.*

5.2.11 Welding of structural stainless steel shall be in accordance with AWS D1.6 and Buyer specification 24590-WTP-3PS-SS00-T0002, *Welding of Structural Stainless Steel and Welding of Structural Carbon Steel to Structural Stainless Steel.*

5.2.12 Repairs required as a result of weld rejection by either Buyer or Seller's final inspection shall be fully documented in accordance with Seller's QAP approved by the Buyer. Weld repair records shall be included with document package.

5.2.13 Welding procedures and welder qualification records shall be submitted to Buyer for review and permission to proceed prior to start of fabrication. Each procedure shall be prepared and qualified in accordance with the requirements of the above listed codes and standards.

5.3 Painting

5.3.1 Shop painting shall be in accordance with sections 4, 6.2, and appendix D of specification 24590-WTP-3PS-AFPS-T0001, *Shop Applied Special Protective Coating for Steel Items and Equipment.*

5.3.2 Stainless steel components and nickel-based alloy construction shall not be painted.

5.4 Assembly

5.4.1 Refer to Section 3.7 of this specification for additional requirements.

5.4.2 Flatness of the completed Thermal Catalytic Oxidizers/Reducers shall be 1/8 inch per foot minimum, with no greater than 3/16 inch over the entire length, except for areas around cutouts. Areas around cutouts shall be flat within 1/16 inch per foot.

5.4.3 Nozzle and flange alignment shall be within ±0.5 degrees of design conditions.

5.4.4 The Thermal Catalytic Oxidizers/Reducers shall have edges that are both smooth and not sharp to the touch.

5.4.5 The method of fabrication shall minimize the number and amount of seams, overlaps, or other discontinuities, which could trap radioactive contamination.

5.4.6 Seller shall submit detailed insulation assembly drawings and procedures for Buyer review.

6 Tests and Inspections

6.1 General

6.1.1 The Seller shall be responsible for testing and inspecting the Thermal Catalytic Oxidizers/Reducers per this specification, applicable codes, standards, and reference documents.

6.1.2 Seller shall submit a detailed test and inspection plan identifying all the inspections and tests planned, including recommended witness and hold points. Buyer's inspector will advise the Seller of witness and hold points and identify the shop tests that the Buyer intends to witness.

6.1.3 Seller shall develop and submit to Buyer detailed testing and inspection procedures for conducting all testing and inspections required per this specification, applicable codes, standards, and reference documents for review by the Buyer prior to fabrication of the Thermal Catalytic Oxidizers/Reducers.

6.1.4 Seller shall complete reports of all testing and inspections and submit them to Buyer. Reports shall identify the component tested, date performed, applicable test procedure, acceptance criteria, person performing the test or inspection, test results, and conclusions. Drawings of test setups shall be included. All testing and inspection results shall be certified.

6.1.5 Control and calibration of measuring and test equipment shall be in accordance with ASME AG-1, subsubarticle AA-5130 and Buyer specification 24590-WTP-3PS-JQ07-T0001 *Instrumentation for Package Systems*, section 6.

6.1.6 All testing and inspection instruments used to conduct testing on the Thermal Catalytic Oxidizers/Reducers shall meet the requirements set forth in ASME AG-1, Article TA-3000. All testing and inspection instruments shall be in calibration and traceable to the appropriate national standard.

6.1.7 Any non-conforming work shall be redone by the Seller at Seller's cost.

6.2 Personnel Qualifications

6.2.1 All inspection and testing shall be performed by personnel qualified per the requirements set forth in this specification and all applicable documents in section 2 of this specification.

6.2.2 Seller shall submit personnel qualification documents, including years of experience for Seller's inspection and test personnel, for Buyer review.

6.3 Non-Destructive Examinations

6.3.1 NDE shall be in accordance with the requirements of ASME AG-1 (subsubarticle AA-6330), and Buyer specification 24590-WTP-3PS-MV00-TP001 *Pressure Vessel Design and Fabrication*, section 6 as applicable to Quality Level. NDE procedures shall be submitted to Buyer for review prior to fabrication.

6.3.2 NDE personnel qualification per the applicable code.

6.3.3 Seller shall submit Radiographic Examination procedures for review prior to fabrication.

6.3.4 Submittal of exposed radiographs is required. Film must be sent, along with technique and reader sheets. Film must be packaged in such a manner as to preclude moisture and handing damage.

6.3.5 Seller shall submit Liquid Penetrant Examination procedures for review, prior to fabrication.

6.3.6 Seller shall submit Ultrasonic Examination procedures for review, prior to fabrication.

6.4 Shop Tests

6.4.1 Seller shall test the performance of the Thermal Catalytic Oxidizers/Reducers in accordance with the requirements of this specification and codes listed in section 2 of this specification. Seller shall submit recommended Challenge Gas with MSDS for Buyer review prior to testing. Performance test must verify that the Thermal Catalytic Oxidizers/Reducers will meet the performance requirements of this specification and the MDSs in section 2 of the MR.

6.4.2 Seller shall provide all materials, labor, tools, equipment, apparatus, instrumentation, testing media, and challenge gas to conduct all shop testing on the Thermal Catalytic Oxidizers/Reducers.

6.4.3 Seller shall conduct the following acceptance tests in the shop on each unit using air at ambient temperature, prior to shipment:

- Visual Inspection
- Structural Capability Test
- Mounting Frame Pressure Leak Test
- System Bypass Test
- Differential Pressure Test

All Thermal Catalytic Oxidizer/Reducer shop acceptance testing procedures shall conform to ASME AG-1 (section TA), N509 (section 9), and N510

6.4.4 Pneumatic testing per ASME Boiler and Pressure Vessel Code, Section VIII, Div. 1 shall be conducted on the Thermal Catalytic Oxidizer/Reducer housing pressure boundary. **U-stamp and National Board Registration is not required.**

6.4.5 Shop test ports for the injection of organic and NO_X shall be designed and provided by the Seller. The same downstream sample test ports will be used for the site test.

6.4.6 Performance test for electric heater shall be in accordance with the requirements of ASME AG-1, TA-4559.

6.5 Site Tests

6.5.1 The Buyer startup personnel shall perform acceptance tests after initial installation to confirm the Thermal Catalytic Oxidizer/Reducer meets the performance requirements specified in section 3.4 of this specification.

6.5.2 The Buyer startup personnel shall perform pressure tests in accordance with the requirements of ASME AG-1, TA- 4300, and applicable sections of ASME N510, to confirm that pressure boundaries meet acceptance criteria. Seller shall furnish blank plates to seal pressure boundaries.

7 Preparation for Shipment

7.1 General

The Thermal Catalytic Oxidizer/Reducer assemblies and catalysts shall be packaged, handled, and stored in accordance with ASME AG-1, Article AA-7000, ASME AG-1a, Article HA-7000, and Buyer specification 24590-WTP-3PS-G000-T0003, *Engineering Specification for Packaging, Handling, and Storage Requirements*.

7.2 Tagging

A stainless steel nameplate shall be attached in a visible location to each Thermal Catalytic Oxidizer/Reducer unit showing the manufacturer's name, shop location, date of manufacture, serial number, equipment rating, equipment tag numbers, weight of assembly and purchase order number. Instruments shall be identified with Buyer provided tag numbers.

7.3 Documentation

Seller shall ensure that appropriate documentation is prepared and, if required, signed by the appropriate person(s). The shipping documentation shall accurately reflect specific traceability to the items being shipped. Drawings (wiring diagrams), showing external terminations for Buyer use to connect to Seller provided instrumentation, shall be marked with the Buyer's instrument tag numbers.

8 Quality Assurance

8.1 General Requirements

8.1.1 The Seller's QAP Requirements are included in Buyer specification 24590-WTP-3PS-G000-T0001, *General Specification for Supplier Quality Assurance Program Requirements*.

8.1.2 Seller's QAP Manual shall be submitted to Buyer for review in accordance with Buyer specification 24590-WTP-3PS-G000-T0001, *General Specification for Supplier Quality Assurance Program Requirements*.

8.1.3 Seller's QAP, as a minimum, shall contain the requirements detailed in the Supplier Quality Assurance Program Requirements Data Sheets listed in Section 2 of the MR.

8.2 Quality (Q) Related Components

8.2.1 Seller shall have in place a QAP meeting the requirements of ASME-NQA-1, marked as applicable in Supplier Quality Assurance Program Requirements Data Sheet attached to the MR, and Buyer specification 24590-WTP-3PS-G000-T0001, *General Specification for Supplier Quality Assurance Program Requirements*.

8.2.2 The successful bidder must pass a pre-award survey by the Buyer. Seller shall demonstrate that its quality program is in compliance with the quality requirements listed in the Supplier Quality Assurance Program Requirements Data Sheet. The Seller shall allow the Buyer, its agent, and DOE access to their facility and records pertaining to this purchase order for the purpose of Quality Assurance Audits and Surveillance at mutually agreed times.

8.2.3 All items shall be manufactured in accordance with the Seller's QAP that meets the requirements of ASME NQA-1, and has been previously evaluated and accepted by the WTP Quality Organization.

8.2.4 Seller shall submit their QAP and work plan to Buyer for review prior to commencement of work. The plan shall include documents and procedures to implement the work and include a matrix of essential Quality Assurance elements cross referenced with the documents/procedures.

8.3 Supplier Deviation

Each Seller shall be required to identify and promptly document all deviations from the requirements of the procuring documents. In addition, the supplier shall be required to describe the recommended disposition for Buyer's acceptance based on appropriate analysis. Submittals of request for deviations from lower-tier suppliers shall be through the prime supplier to WTP.

Seller-proposed deviations from procurement documents shall be initiated by use of Supplier Deviation Disposition Request (SDDR) form in section 2 of the MR.

9 Configuration Management

Equipment and or components covered by this specification are identified with plant item numbers shown in the MDSs. Each item shall be identified in accordance with Tagging in section 7.2 of this specification.

10 Documentation and Submittals

10.1 General

Seller shall submit to Buyer Engineering and Quality Verification documents in the forms and quantities shown in Form G-321-E, *Engineering Document Requirement*, and Form G-321-V, *Quality Verification Document Requirements*, attached to the MR.

10.2 Submittals

The Seller shall submit the following:

10.2.1 Drawings

Drawings shall be in accordance with ASME Y14.100 and show the following information:

10.2.1.1 The outline dimensions of the Thermal Catalytic Oxidizer/Reducer unit, including outline and detail drawings for each component. These drawings shall reflect the "as-shipped" configuration of the equipment and instrumentation.

10.2.1.2 Details of construction

10.2.1.3 Mounting dimensions and information required for the design of supports and foundations.

10.2.1.4 Operating weight and center of gravity of the Thermal Catalytic Oxidizer/Reducer

10.2.1.5 The space required for the removal of components.

10.2.1.6 The location of access doors.

10.2.1.7 Thermal insulation and interface points with Buyer's foundation.

10.2.1.8 The weight and center of gravity of individual components.

10.2.1.9 The locations and identification of parts that are included in the parts list.

10.2.1.10 Wiring and schematic diagrams. Diagrams shall include wire gauges and fuse sizes applicable to the supplied units only.

10.2.1.11 The ASTM or equivalent designation for materials.

10.2.1.12 Nozzle locations for connections to Buyer's process and utility piping including electrical and instrumentation connections.

10.2.1.13 Piping and instrumentation diagrams (P&IDs). P&IDs shall show piping system scheme with sizes and control elements.

10.2.2 Procedures

Procedures shall include but not limited to:

10.2.2.1 Welding procedures

10.2.2.2 Procedures for repairs of rejected items or parts.

10.2.2.3 Electrical component performance test procedures

10.2.2.4 Seller's shipping preparation procedures.

10.2.2.5 Startup, shutdown and idle procedures

10.2.2.6 Performance test procedures and acceptance criteria for shop tests

10.2.2.7 Performance test procedures and acceptance criteria for site tests

10.2.3 Inspection and Test Reports

10.2.3.1 Records of repairs of rejected items or parts.

10.2.3.2 Electrical component performance test reports

10.2.3.3 Performance test reports for shop tests

10.2.3.4 Performance test reports for site tests

10.2.3.5 Reliability assessment

10.2.4 Calculations

10.2.4.1 Seismic and Thermal analyses/calculations shall be submitted for Buyer's review and permission to proceed. Analyses shall include nozzle loadings and deflections for normal operation and design conditions.

10.2.4.2 Seller shall submit code calculations in accordance with sections 3.1.7 and 3.1.8 of this specification.

10.2.5 Manuals

Manuals and instructions shall include:

10.2.5.1 Erection and installation manuals which provide complete, detailed procedures for installing and placing equipment in initial operation. The manuals shall include all erection and installation drawings. Refer to Buyer specification 24590-WTP-3PS-G000-T0003 *General Specification for Packaging, Handling and Storage Requirement*, for additional requirements.

10.2.5.2 Operation, accessibility and maintenance manuals which provide complete, detailed descriptions of components and appurtenances with data sheets showing design, construction and performance data for equipment. Manuals shall include drawings required for operation, maintenance and repair, maintenance requirements, instructions and operational troubleshooting guides.

10.2.5.3 Instruction manuals shall cover every item purchased, including materials that the Seller has obtained from a subcontractor. The Seller shall obtain such manuals and lists, and submit them to the Buyer.

10.2.5.4 The Seller shall provide instructions regarding site storage and preparation and protection of equipment after installation and prior to operation. Refer to Buyer specification 24590-WTP-3PS-G000-T0003 *General Specification for Packaging, Handling and Storage Requirement*, for additional requirements.

10.2.6 Certificates of Conformance

10.2.6.1 Seller shall provide Certificates of Conformance demonstrating compliance with all applicable standards, specifications, and drawings.

10.2.6.2 Seller shall certify lifting eyes or lugs and/or spreader bars are suitable for the safe, balanced lifting, and handling of the equipment.

10.2.7 Schedules

Lists and schedules shall include:

10.2.7.1 Schedule of engineering and fabrication.

10.2.7.2 Parts list, and cost for parts and items subject to deterioration and replacement.

10.2.7.3 List of recommended spare parts. The spare parts list shall include names of the original equipment manufacturer with appropriate part numbers, cost, and delivery information valid (lead time) for one year after delivery of the equipment.

10.2.8 Materials Certificates/Statistics

10.2.8.1 Material Certificate of Compliance shall be submitted for components of the Thermal Catalytic Oxidizers/Reducers. Certificate shall include certified material test reports of chemical and physical properties for all stress components.

10.2.8.2 Manufacture's Material Certificate of Compliance with ASME and/or ASTM material numbers and grades shall be provided for the housing, ducts, weld filler metal, and support framing integral to the Thermal Catalytic Oxidizer/Reducer assembly.

10.2.9 Data

Data shall include:

10.2.9.1 Buyer's Mechanical Data Sheets, completely filled out by the Seller, showing all information required to determine that the units are of the design and materials specified herein.

10.2.9.2 Buyer's Electrical Data Sheets for Low Voltage Induction Motors, completely filled out by the Seller, showing all information required to determine that the motors will meet requirements specified herein.

10.2.10 Seller shall submit equipment reliability figures for all major components and sub-components in accordance with the requirements of this specification.

Figure 1 - Thermal Catalytic Oxidizer/Reducer Schematic

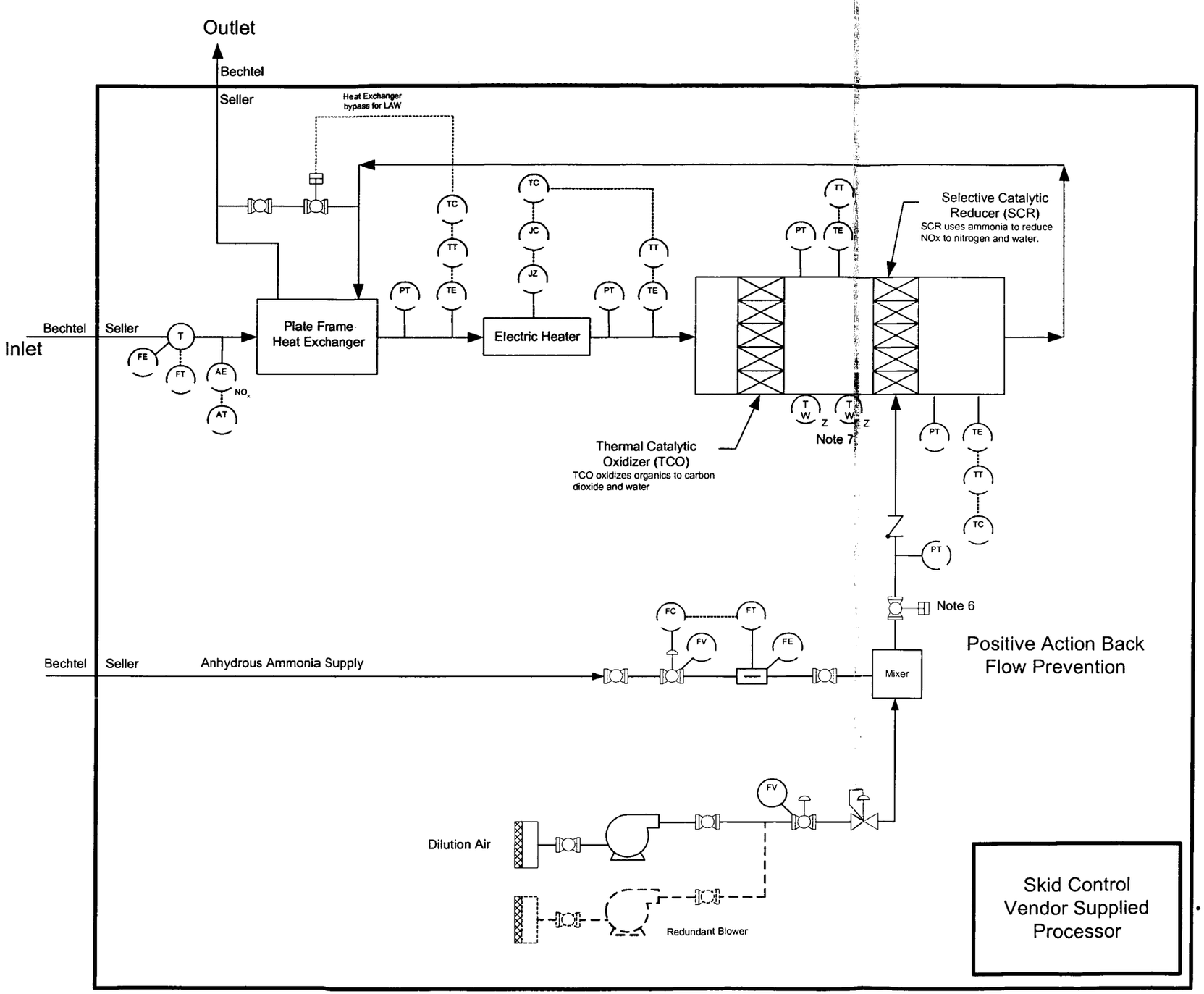

Notes

1) This figure is only intended to give a pictorial view of the minimum equipment and instrumentation requirements for the Thermal Catalytic Oxidizers/Reducers. This figure does not include additional equipment and instrumentation that may be proposed by the Seller to guarantee performance.
2) PDTs may be used to directly measure pressure drop across affected equipment e.g. Heater, TCO and SCO.
3) Thermal type meter proposed. Flow Meter type by Seller.
4) Dilution equipment and or air feed for dilution fans may be located separate from equipment. Refer to specification for requirements.
5) Heat exchanger bypass is only for LAW unit.
6) Seller shall supply one QL-2 remote actuated isolation valve.
7) Seller shall supply two QL-2 thermowells for the LAW unit.

Inputs from Vendor Processor	Output to Vendor Supplied Processor
PI - Heater Inlet	DO - Warm Up
PI - Heater Outlet	DO - Online / Run
PI - TCO Outlet	DO - Shutdown / By-Pass
PI - SCR Outlet	
TI - Heater Inlet	
TI - Heater Outlet	
TI - TCO Outlet	
TI - SCR Outlet	
FI - Heat Exchr. Inlet	
AI - Nox Ht Exchr. Inlet	
FI - Ammonia Flow	
DI - System at Operating Temp	

R10638320

RIVER PROTECTION PROJECT – WASTE TREATMENT PLANT

ENGINEERING SPECIFICATION

ISSUED BY
RPP-WTP PDC

FOR

Process Ejector / Eductor

ERIC B. ISERN
STATE OF WASHINGTON
33449
REGISTERED
PROFESSIONAL ENGINEER
11/2/05
EXPIRES: 07/28/07

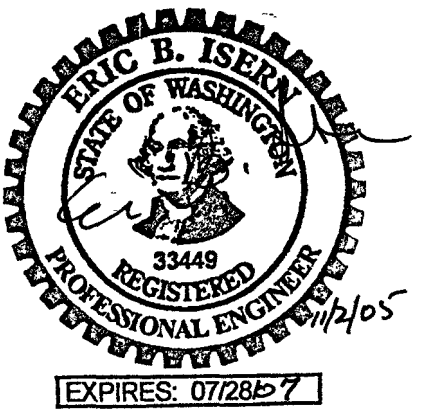

This bound document contains a total of 15 pages.

Content applicable to ALARA? ☒ **Yes** ☐ **No**

ADR No.
N/A

Rev
N/A

Quality Designator
QL
DOE Contract No. DE-AC27-01RV14136

NOTE: Contents of this document are Dangerous Waste Permit affecting.

2	11/2/05	[signature]	[signature]	[signature]	N/A	N/A	[signature]
1	4/02/03	J. Jackson	J. Preston	C. Morley	N/A	N/A	M. Hoffmann
0	12/7/02	J. Jackson	J. Karpati	N/A	N/A	N/A	C. Morley
REV	**DATE**	**BY**	**CHECK**	**REVIEW**	**E&NS**	**QA**	**DPEM**

SPECIFICATION No.	**Rev**
24590-WTP-3PS-MCE0-TP002	2

Revision History

Revision	Reason for Revision
0	Issued for Permitting Use
1	Issued for Permitting Use
2	Issued for Permitting Use

Notice

Please note that source, special nuclear, and byproduct materials, as defined in the Atomic Energy Act of 1954 (AEA), are regulated at the US Department of Energy (DOE) facilities exclusively by DOE acting pursuant to its AEA authority. DOE asserts, that pursuant to the AEA, it has sole and exclusive responsibility and authority to regulate source, special nuclear, and byproduct materials at DOE-owned nuclear facilities. Information contained herein on radionuclides is provided for process description purposes only.

Contents

Notice iii

1 Scope 1

1.1 Project Description and Location 1

1.2 Equipment, Material, and Services Required 1

1.3 Work by Others 2

1.4 Definitions (Acronyms/Abbreviations) 2

1.5 Safety/Quality Classifications 2

2 Applicable Documents 2

2.1 General 2

2.2 Codes 3

2.3 Industry Standards 3

2.4 Engineering Standards 3

2.5 Reference Documents/Drawings 3

3 Design Requirements 4

3.1 Basic Function 4

3.2 Applications 4

3.3 Performance 5

3.4 Design Conditions 5

3.5 Environmental Conditions 6

3.6 Mechanical Requirements 6

3.7 Loadings 6

3.8 Corrosion and Erosion Allowance 6

3.9 Electrical Requirements 6

3.10 Instrumentation and Control Requirements 6

3.11 Accessibility and Maintenance 7

4 Materials 7

4.1 Positive Material Identification 7

4.2 Construction 7

4.3 Prohibited Materials 7

4.4 Special Requirements 7

4.5 Storage of Materials 7

5 Fabrication 7

5.1 Welding 8
5.2 Assembly 8
5.3 Heat Treatment 8
6 Tests and Inspections 8
6.1 General 8
6.2 Non-Destructive Examinations 8
6.3 Shop Tests 9
6.4 Site Tests 9
6.5 Control of Nonconforming Items 9
7 Preparation for Shipment 9
7.1 Cleanliness 9
7.2 Painting 9
7.3 Tagging 9
7.4 Packaging 9
7.5 Shipping Instructions 9
8 Quality Assurance 10
8.1 General Requirements 10
8.2 Quality Related Components 10
9 Configuration Management 10
9.1 General 10

Figures

Figure 1 Inlet/Outlet Flow of the Process Ejector 4
Figure 2 Applications of the Process Ejector 5

1 Scope

1.1 Project Description and Location

The River Protection Project – Waste Treatment and Immobilization Plant (RPP-WTP) is a complex of waste treatment facilities where the U.S. Department of Energy (DOE) Hanford Site tank waste will be put into stable glass form. The WTP Contractor will design, build, and startup the RPP-WTP pretreatment and vitrification facilities for the DOE Office of River Protection (ORP). The waste treatment facilities will pretreat and immobilize the low activity waste (LAW) and high level waste (HLW) currently stored in underground storage tanks at the Hanford Site.

The Hanford Site occupies an area of about 560 square miles and is located along the Columbia River, north of the city of Richland, Washington. The RPP-WTP Facility will be constructed at the east-end of the Hanford Site. The Counties of Benton, Franklin, and Grant surround the Hanford Site.

1.2 Equipment, Material, and Services Required

The Seller shall be responsible for analysis, design, fabrication, inspection, testing, special tools, handling instructions, packaging, storage instructions, and documentation for all equipment covered by this specification.

The Buyer will provide all required design inputs in the following documents: Specification, Material Requisition (MR), and Mechanical Data Sheets. It is further expected that the Seller will specify to the Buyer all additional design inputs and information that may be needed for the Seller to execute the provisions of this specification and the material requisition(s). The Seller shall advise the WTP of all known requirements and limitations regarding deployment and operation of ejector equipment.

Seller responsibilities for equipment and supporting documentation required under the provisions of this specification include, but are not limited to:

1.2.1 Development and Submittal of a schedule for Seller deliverables. Schedule dates will be negotiated and agreed to by authorized representatives of the Seller's and the Buyer's organizations.

1.2.2 The Seller shall submit Outline and Shop Detail drawings. These drawings shall include overall dimensions, mounting details, and fabrication details.

1.2.3 Fabrication and Delivery of Process Ejectors. The Process ejectors when delivered shall require only connection to the Buyer's piping system.

1.2.4 Testing of each model ejector/eductor to demonstrate that the device meets the Buyer approved acceptance criteria for performance.

1.2.5 The Seller shall prepare submit Installation, Operation, and Maintenance manuals for Buyer's review.

1.2.6 Provision of load weights, envelope dimensions, and external nozzle sizes for each Process ejector model that may be specified for inclusion in the WTP systems.

1.3 Work by Others

1.3.1 Shipping to job site

1.3.2 Material unloading and storage at job site

1.3.3 Installation labor

1.3.4 Interconnecting pipe work external to the equipment.

1.4 Definitions (Acronyms/Abbreviations)

1.4.1 **ASME** American Society of Mechanical Engineers

1.4.2 **ASNT** American Society of Nondestructive Testing

1.5 Safety/Quality Classifications

1.5.1 Quality Level (QL)

The quality level identifies the quality requirements to be applied to the equipment. The identified quality levels are QL-1, QL-2, QL-3, QL-4, AP (Air Permit), and CM (Commercial). Quality requirements are specifically defined on the associated Mechanical Data Sheets and supplier quality assurance program requirements data sheets.

1.5.2 Seismic Category (SC)

Specific requirements for each seismic category are defined in the reference specifications 24590-WTP-3PS-SS90-T0001 and 24590-WTP-3PS-FB01-T0001 (See section 2.5). The seismic category is identified on the Mechanical Data Sheet.

2 Applicable Documents

2.1 General

2.1.1 Work shall be done in accordance with the referenced codes, standards and documents listed below, which are an integral part of this specification.

2.1.2 When specific chapters, section, parts, or paragraphs are listed following a code, industry standard, or reference document, only those chapters, sections, parts, or

paragraphs of the document are applicable and shall be applied. If a date or revision is not listed in section 2, the latest issue, including addenda, at the time of request for quote (RFQ) shall apply. The dates and revisions listed in section 2 shall apply to all subsequent references to codes and standards within this specification. When more than one code, standard, or referenced document covers the same topic, the requirements for all must be met with the most stringent governing.

2.2 Codes

2.2.1	ASME B31.3 - 1996	Process Piping
2.2.2	ASME NQA-1-1989	Quality Assurance Program Requirements for Nuclear Facilities

2.3 Industry Standards

2.3.1	ASNT SNT-TC-1A, 1984	Recommended Practice (including Non-Destructive Examination [NDE] personnel certification)

2.4 Engineering Standards

Any additional engineering specifications and standards proposed for use by the Seller shall be reviewed by the Buyer prior to incorporation into the design.

2.5 Reference Documents/Drawings

24590-WTP-3PS-SS90-T0001	Engineering Seismic Qualification of Seismic Category I/II Equipment and Tanks
24590-WTP-3PS-PS02-T0001	Engineering Specification for Shop Fabrication of Piping
24590-WTP-3PS-FB01-T0001	Engineering Specification for Structural Design Loads for Seismic Category III & IV Equipment and Tanks
24590-WTP-3PS-G000-T0003	Engineering Specification for Packaging, Handling and Storage Requirements
24590-WTP-3PS-G000-TP002	Engineering Specification for Positive Material Identification (PMI) for Positive Material Identification requirements.
24590-WTP-3PS-G000-T0001 Program	General Specification Seller Quality Assurance Requirements

3 Design Requirements

3.1 Basic Function

The basic ejector or eductor cycle is an operating media entrains a suction fluid in the suction chamber whereby a two phase flow regime is discharged. Ejectors or eductors have no moving parts; hence routine maintenance is not required.

Ejectors are employed in various pumping and heating applications, and use high pressure motive media to lift and pump a lower pressure water based hazardous (corrosive / erosive) fluid with suspended fines.

Eductors are used in various liquid heating and mixing applications. The intimate contact between the motive media and the process liquid makes the eductor ideal for mixing and heating application.

It is a requirement that process ejector components shall remain operable throughout the 40-year life of the WTP facility with zero maintenance access in the majority of ejector installations.

Process ejector connections in the piping system are butt welded.

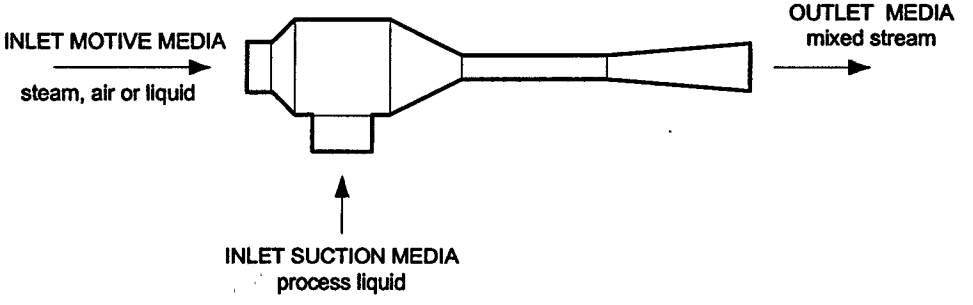

Figure 1 Inlet/Outlet Flow of the Process Ejector

3.2 Applications

Process ejectors and eductors are utilized in the WTP for liquid transfer, heating, and mixing in process vessels. The ejector and eductors are also used for sump emptying applications.

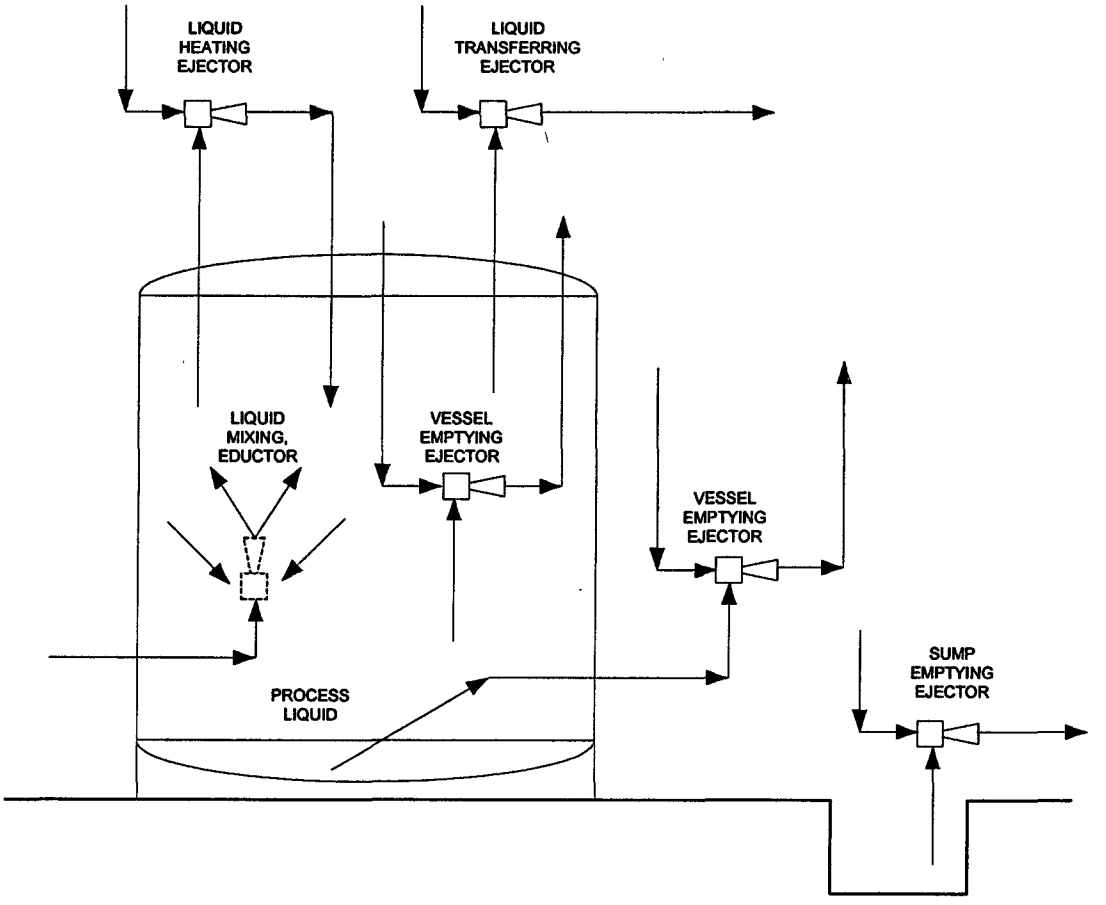

Figure 2 ***Applications of the process ejector***

3.3 Performance

Requirements for each ejector or eductor are specified on Buyer provided Mechanical Data Sheets. Seller shall supply the ejector or eductor performance curves.

3.4 Design Conditions

3.4.1 Ejectors or eductors shall be designed in accordance with the Buyer's Mechanical Data Sheets.

3.4.2 The equipment and appurtenances will be used in a plant that has a design life of 40 years. The design life for the process ejectors and eductors shall also be 40 years.

3.4.3 All dimensions shall be U.S. Standard.

3.4.4 The end connection (butt weld, flange, or threaded) of the ejector or eductor will be specified on the ejector / eductor Mechanical Data Sheet and shall be prepared

for installation in the Buyer's piping systems. Components requiring jumper connections will be identified by the Buyer.

3.5 Environmental Conditions

3.5.1 The RPP-WTP is at approximately 700 feet above sea level.

3.5.2 Buyer will be provided the site and operating conditions of the ejector and eductor on the Mechanical Data Sheet.

3.5.3 Sound pressure levels around equipment shall be limited to maximum 85 dBA at 3 feet horizontal distance from noise producing components under any normal operating conditions. Seller to provide one data sheet specifying ejector or eductor noise level for each equipment model.

3.6 Mechanical Requirements

3.6.1 All materials and fabrication procedures shall be in accordance with the ejector / eductor Mechanical Data Sheet.

3.6.2 Ejectors and eductors fabricated by 100% butt-welded construction (including internals) shall be examined using 100% radiography for Quality Level (QL) components.

3.6.3 Radiography is not required for Commercial (CM) components.

3.7 Loadings

Inlet, suction and discharge pipe ends, which will be butt welded to project piping, shall meet seismic load capability requirements as defined in project specification 24590-WTP-3PS-SS90-T0001 or 24590-WTP-3PS-FB01-T0001, as applicable.

3.8 Corrosion and Erosion Allowance

Corrosion and erosion allowance is specified on the Mechanical Data Sheet and shall be applied to each surface exposed to process vapor or liquid. Ejectors and eductors internal to vessel shall have the specified corrosion allowance applied to both internal and external surfaces.

3.9 Electrical Requirements

N/A

3.10 Instrumentation and Control Requirements

N/A

3.11 Accessibility and Maintenance

3.11.1 Ejectors and eductors are not intended to require routine maintenance. Recommendations for system flushing and methods for recovery of blocked process ejectors shall be discussed in the Seller submitted operations and maintenance manuals (see section 1.2.5).

3.11.2 The Seller shall provide clear pre-operation maintenance and preservation instructions so as to keep the equipment in like new condition until ready for use.

4 Materials

4.1 Positive Material Identification

4.1.1 Refer to specification 24590-WTP-3PS-G000-TP002, Positive Material Identification (PMI), for positive material identification requirements.

4.2 Construction

4.2.1 The Seller shall furnish legible copies of mill test reports from the supplier of fabrication materials for all Process Ejectors / Eductors.

4.2.2 Construction material of the Process ejector will be specified on the Buyer's Mechanical Data Sheet.

4.3 Prohibited Materials

Materials containing aluminum, antimony, bronze, cadmium, copper, lead, teflon, tin, zinc, or other low melting point metals, their alloys, or materials containing bleachable halogens or sulfates, shall not be used in direct contact with stainless steel or nickel-based alloys.

4.4 Special Requirements

Where special requirements or restrictions are to be applied to the established items, these will be specified in accompanying contractual documentation. In the absence of such instructions, the manufacturers standard product shall be supplied as specified or as approved by the Buyer.

4.5 Storage of Materials

The Seller shall advise any special storage and preservation requirements.

5 Fabrication

The Seller shall obtain a written final design acceptance of all submitted procedures and drawings from the Buyer prior to the start of fabrication activities

5.1 Welding

5.1.1 Welding shall be performed by qualified welders per welding procedures prepared and qualified in accordance with ASME B31.3 - 1996.

5.1.2 Weld repair records shall be available for shop inspection and be submitted with the documentation package.

5.1.3 Weld procedures and procedure qualification records shall be submitted to the Buyer for review and acceptance prior to start of fabrication

5.2 Assembly

Preparations of field butt weld ends shall be in accordance with 24590-WTP-PW-P30T-00001.

5.3 Heat Treatment

N/A

6 Tests and Inspections

6.1 General

The Seller shall submit an inspection and test plan. A quality assurance manual with the relevant procedures for review and acceptance will also be submitted. The Buyer shall specify the following to be verified: the design requirements, the amount of inspection or testing, and the organizational element responsible for performing the inspection.

The seller shall be responsible for performing all tests and inspections.

6.2 Non-Destructive Examinations

The personnel performing non-destructive examinations or reviewing such tests results shall be certified to ASNT Standard SNT-TC-1A-1984.

6.2.1 Dye Penetrant Test (PT) or Radiographic Tests (RT) shall be performed on welds. Testing shall be performed and documented per the requirements of ASME B31.3 –1996. PT shall be performed on welds that cannot be RT'd. RT shall be performed on all accessible welds. Seller shall obtain Buyers agreement on welds not to be RT'd.

6.2.2 Hydrostatic testing shall be performed and documented on each completed process ejector and eductor per the requirements of ASME B31.3 – 1996.

6.2.3 A NDE and Hydrostatic report shall be submitted to document findings of all required examinations.

6.3 Shop Tests

6.3.1 Seller shall conduct and be responsible for both the Mechanical Test Procedure and Performance testing of each model ejector and eductor. Seller shall provide Buyer certified performance curves for each ejector and eductor model test.

6.3.2 Seller shall furnish all facilities necessary for the performance of such tests. In the event Seller's own facilities are not suitable for such tests, Seller shall advise Buyer and obtain permission for using alternative facilities.

6.4 Site Tests

Seller shall provide recommendations for operation of each process ejector system and shall be available for review and consultation of results from startup testing.

6.5 Control of Nonconforming Items

The control of nonconforming items is per specification 24590-WTP-3PS-G000-T0001.

7 Preparation for Shipment

7.1 Cleanliness

See instructions in the 24590-WTP-3PS-PS02-T0001 (Specification for Shop Fabrication of Piping) and 24590-WTP-3PS-G000-T0003 (Specification for Packaging, Handling, and Storage).

7.2 Painting

N/A

7.3 Tagging

Each Process ejector shall be legibly stamped or permanently tagged with its assigned Plant Item (equipment) Number. Where thin wall materials are used or where stamping is not permitted or advisable, the Seller shall submit for the Buyer's approval an alternate proposal for equipment identification.

7.4 Packaging

See instructions in 24590-WTP-3PS-G000-T0003, Engineering Specification for Packaging, Handling, and Storage.

7.5 Shipping Instructions

Shipping of ejector units to job site will be performed by the BNI.

8 Quality Assurance

8.1 General Requirements

8.1.1 Seller's Quality Assurance Program (QAP) requirements are specified in Buyer document # 24590-WTP-3PS-G000-T0001, *General Specification for Supplier Quality Assurance Program Requirements.*

8.1.2 Seller's QAP manual shall be submitted to the Buyer for review in accordance with Buyer document # 24590-WTP-3PS-G000-T0001, *General Specification for Supplier Quality Assurance Program Requirements.*

8.1.3 Seller's QAP, as a minimum, shall contain the requirements detailed in the Supplier Quality Assurance Program Requirements data sheet listed in section 2 of the MR.

8.2 Quality Related Components

8.2.1 Seller shall have in place a QAP meeting the requirements of ASME-NQA-1-1989, marked as applicable in Supplier Quality Assurance Program Requirements Data Sheet attached to the MR, and Buyer document # 24590-WTP-3PS-G000-T0001, *General Specification for Supplier Quality Assurance Program Requirements.*

8.2.2 The successful bidder must pass a pre-award survey by the Buyer. Seller shall demonstrate that its quality program is in compliance with the procurement quality requirements listed in the Supplier Quality Assurance Program Requirements Data Sheet. Seller shall allow the Buyer, its agents, and DOE access to their facility and records pertaining to this purchase order for the purpose of QA audits and surveillance at mutually agreed times.

8.2.3 All items shall be manufactured in accordance with Seller's QAP that meets the requirements of ASME NQA-1-1989, and has been previously evaluated and accepted by the WTP Quality Assurance Organization.

8.2.4 Seller shall submit their QAP and work plan to the Buyer for review prior to commencement of work. The plan shall include documents and procedures to implement the work and include a matrix of essential QA elements cross referenced with the documents or procedures.

9 Configuration Management

9.1 General

Refer to Section 3 of the Material Requisition and forms G-321-E and G-321-V with their associated instructions for the required documents and submittals.

R10272723

ISSUED BY RPP-WTP PDC
INIT 3/19/04 DATE

RIVER PROTECTION PROJECT – WASTE TREATMENT PLANT

ENGINEERING SPECIFICATION

FOR

Shell and Tube Heat Exchanger

3/19/04

EXPIRES 12/10/04

This bound document contains a total of 11 pages.

Content applicable to ALARA? ☒ **Yes** ☐ **No**

ADR No.
N/A

Rev

Quality Designator
QL
DOE Contract No. DE-AC27-01RV14136

NOTE: Contents of this document are Dangerous Waste Permit affecting.

REV	DATE	REASON FOR REVISION	BY	CHECK	REVIEW	QA	APEM/DEM
1	3/19/04	Issued for Permitting Use				N/A	
0	10/2/02	Issued for Permitting Use	Jessica Jackson	Richard Polmanteer	Suzanne Kirk	N/A	N/A

SPECIFICATION No. 24590-WTP-3PS-MES0-TP001 **Rev** 1

Please note that source, special nuclear and byproduct materials, as defined in the Atomic Energy Act of 1954 (AEA), are regulated at the U.S. Department of Energy (DOE) facilities exclusively by DOE acting pursuant to its AEA authority. DOE asserts, that pursuant to the AEA, it has sole and exclusive responsibility and authority to regulate source, special nuclear, and byproduct materials at DOE-owned nuclear facilities. Information contained herein on radionuclides is provided for process description purposes only.

Contents

1 Scope 3
2 Applicable Documents 3
2.1 General 3
2.2 Codes 3
2.3 Industry Standards 3
2.4 Reference Documents/Drawings 3
2.5 References 4
3 Design Requirements 4
3.1 Basic Requirements 4
3.2 Supplemental Quality Level Criteria for Heat Exchangers 4
3.3 Tubes and Tube Bundles 5
3.4 Tubesheets 6
3.5 Impingement Plates, Baffles and Seals 6
3.6 Channels 7
3.7 Shell, Shell Covers and Shell Supports 7
3.8 Flanged External Girth Joints 8
3.9 Expansion Joints 8
4 Supplemental Testing Requirements 8
5 Quality Assurance 9
5.1 General Requirements 9
5.2 Quality (Q) Related Components 9

Appendices

Appendix A Revision History ..... A-i

1 Scope

This specification supplements the RPP-WTP Specification for Pressure Vessel Design and Fabrication (24590-WTP-3PS-MV00-TP001). This specification, together with the purchase order, data sheets, and drawings, covers the requirements for the design, fabrication, and testing of shell and tube heat exchangers for the River Protection Project – Waste Treatment Plant (RPP-WTP) located at Hanford in the southeastern part of Washington State.

2 Applicable Documents

2.1 General

2.1.1 Work shall be done in accordance with the referenced codes, standards, and documents listed below, which are an integral part of this specification.

2.1.2 When specific chapters, sections, parts, or paragraphs are listed following a code, industry standard, or reference document, only those chapters, sections, parts, or paragraphs of the document are applicable and shall be applied. If a date or revision is not listed, the latest issue, including addenda, at the time of Request for Quote (RFQ) shall apply. When more than one code, standard, or referenced document covers the same topic, the requirements for all must be met with the most stringent governing.

2.2 Codes

2.2.1 American Society of Mechanical Engineers, Boiler and Pressure Vessel Code, Section VIII, Division I, Rules for Construction of Pressure Vessels(Applicable to QL1 and QL2 category components only)

2.2.1 American Society of Mechanical Engineers, Quality Assurance Requirements for Nuclear Facilities, ASME NQA-1 (1989)

2.3 Industry Standards

Standards of the Tubular Exchanger Manufacturers Association (TEMA Standard) – Eighth Edition - 1999

2.4 Reference Documents/Drawings

2.4.1 RPP-WTP Specification for Pressure Vessel Design and Fabrication, 24590-WTP-3PS-MV00-TP001

2.4.2 RPP-WTP Specification for Supplier Quality Assurance Program Requirements, 24590-WTP-3PS-G000-T0001

2.5 References

Zick, L. P., "Stresses in Large Horizontal Cylindrical Pressure Vessels on Two Saddle Supports", page 959, Pressure Vessels and Piping: Design and Analysis, A Decade of Progress, Volume II, published by ASME.

3 Design Requirements

3.1 Basic Requirements

3.1.1 Unless otherwise specified, all shell and tube heat exchangers shall be designed and fabricated in accordance with the ASME Section VIII Division 1, the TEMA standard, the RPP-WTP Specification for Pressure Vessel Design and Fabrication, and any additional requirements of this specification and the referenced drawings.

3.1.2 The Buyer's thermal design requirements will be shown on the individual Mechanical Data Sheet (MDS). When the Buyer's MDS or Mechanical Drawing show the mechanical sizes (diameters, length, tube number, sizes, etc.), this data shall be considered as preliminary. Seller shall verify the thermal, hydraulic and mechanical designs. Where necessary, the Seller shall change the exchanger size in order to furnish complete thermal, hydraulic and mechanical guarantees. Seller shall calculate the heat transfer rate for each unit and base the design on the minimum surface necessary to guarantee that the heat exchanger offered is satisfactory for the duty and fouling factors specified. Buyer's preliminary area estimate, where specified and determined to be conservative, shall prevail.

3.1.3 If ASME Section VIII, Division 1 specifies two allowable stresses for the design of pressure parts, the lower value must be used for the design of tubesheets, bolted flanges, and flat cover plates.

3.1.4 The steam condensing side of any heat exchanger shall be designed for full vacuum. In addition, any chamber subjected to partial vacuum in any service shall be designed for full vacuum unless otherwise noted or approved by the Buyer.

3.1.5 When stacked exchangers are specified by Buyer, Seller shall be responsible for investigating and solving any thermal-expansion related problems for the interconnecting nozzles and supports.

3.1.6 Floating head construction shall not be used unless otherwise noted on the MDS or approved by the Buyer. A "packed gland" type is not acceptable.

3.2 Supplemental Quality Level Criteria for Heat Exchangers

3.2.1 Heat exchanger quality level shall be specified on the MDS by the buyer.

3.2.2 Quality Level 1 heat exchangers shall be TEMA Class B and shall be of all welded construction. Tubes shall be welded to the tubesheet(s) with full strength welds. The tubes shall include a corrosion allowance, shown on the mechanical drawing, for the process side of the tube walls.

3.2.3 Quality Level 2 heat exchangers shall be TEMA Class B and shall be of all welded construction on the process fluid side. Tubes shall be welded to the tubesheet(s) with full strength welds.

3.2.4 Commercial Quality heat exchangers shall be TEMA Class C or B with no restriction on body flanges. For heat exchangers in cyclic services, tubes shall be welded to the tubesheet(s) with strength welds.

3.3 Tubes and Tube Bundles

3.3.1 Tubing shall be seamless unless otherwise noted or approved by Buyer. Tube-to-tube welds/joints are not permitted.

3.3.2 When tube outside diameter and thickness are shown on the mechanical drawing, they are for the straight tube section of the tube bundle.

3.3.3 Straight tube length shall be a maximum of 20 feet, unless otherwise noted or approved by Buyer.

3.3.4 All austenitic stainless steel U-tubes shall be solution annealed after bending, unless otherwise noted or approved by Buyer.

3.3.5 If strength welded tube-to-tubesheet welds are not used, Seller shall verify that the yield strength of the tube material does not exceed the yield strength of the tubesheet material. This is to ensure quality rolling, expansion and sealing of tubes to tubesheet.

3.3.6 Tube bundles shall be designed, in accordance with the TEMA standard, to prevent tube damage that may be caused by flow induced or acoustic vibrations.

3.3.7 Weighted mean temperature difference (MTD) shall be used only when the Seller provides heat release curves or tables.

3.3.8 When calculating the effective surface area of the heat exchanger, the tube length within the thickness of the tubesheet shall be excluded.

3.3.9 For U-tube bundles with full diameter support adjacent to the bends, the surface area of the return bends shall not be included in the heat transfer calculations.

3.3.10 The number of tubes in any pass shall be within 10 percent of the average number of tubes per pass.

3.3.11 For heat exchangers in non-radioactive service, with a tube bundle diameter 30 inches or larger, skid bars shall be provided to facilitate bundle removal.

3.3.12 The maximum bundle diameter shall be 60 inches unless otherwise noted on the MDS or approved by the Buyer.

3.4 Tubesheets

3.4.1 Tubesheet thickness calculations shall be in accordance with TEMA and be based on both the corroded and uncorroded states.

3.4.2 When tube material is austenitic stainless steel, special close-fit tube holes per TEMA shall be used.

3.4.3 Unless otherwise specified by the Buyer, the design temperature for tubesheets shall be taken as the larger of either the shell-side or tube-side design temperatures specified on the MDS.

3.4.4 Four tapped holes for bundle pulling shall be equally spaced in the face of all removable bundle tubesheets. Plugs of the same material as the tubesheet shall be provided for plugging the holes.

3.4.5 When a bonnet-type head is used as the stationary end of a U-tube heat exchanger, the diameter of the fixed tubesheet shall be equal to the outside diameter of the shell flange. The tubesheet shall be counterbored to accept collar studs. Approximately 25%, with a minimum of four, of the flange studs shall be collar studs. They are to be provided with lock nuts on the shell-side of the flange. Tapped tubesheet bolt holes in lieu of collar studs are not allowed without prior Buyer approval.

3.4.6 When hub-type fixed tubesheets are required, the hub shall be integrally forged with the tubesheet. Hubs made from built-up weld metal shall not be permitted.

3.4.7 For multiple pass exchangers, the design of the exchanger shall take into account the effect of gasket seating at the pass partitions. Tube openings shall not be obscured by partition plates or gaskets.

3.5 Impingement Plates, Baffles and Seals

3.5.1 Single pass tube-side design with axial nozzles shall use conical heads or shall have a full diameter perforated plate in the inlet channel, which provides both impingement protection and even flow distribution.

3.5.2 For plate-type impingement devices, plates shall be circular solid plates that are securely fastened or welded to the spacer tubes or tie rods. The plate shall be located a minimum distance of 0.25 times the nozzle inside diameter downstream of the nozzle.

3.5.3 For rod-type impingement devices, the design shall include a minimum of two rows of rods on a triangular pitch. The rod diameter may be smaller than the tube diameter but there shall be an overlap of approximately 0.125 inch between rows.

The top of the first row of rods must be located a minimum distance of 0.15 times the nozzle inside diameter downstream of the nozzle.

3.5.4 Shell-side baffles, support plates and partition plates shall be provided with minimum 3/8 inch notches to drain the heat exchanger.

3.5.5 For the transverse baffles in horizontal heat exchangers, horizontal baffle cuts shall be utilized for single phase and vaporizing shell-side services while vertical baffle cuts shall be utilized for "high solids content" fluids and condensing shell-side services.

3.5.6 Dummy tubes or solid bars shall be placed in the shell-side void areas caused by pass partition plates. These devices are not required for isothermal shell-side vaporization or condensation, or when the baffle cut is parallel (or within 45° of parallel) to the pass partition plate.

3.5.7 Bypass seal devices are required when the radial clearance between the outer tube limit (OTL) and the shell is greater than one tube diameter. The bypass seals shall be placed 1 to 3 inches from the baffle cut and approximately every six rows of tubes, and shall extend to within the ligament distance of the tubes. These sealing devices are not required for isothermal shell-side vaporization or condensation.

3.6 Channels

3.6.1 For flat channel covers, the maximum allowable deflection shall be 0.03125 inch.

3.6.2 Flat covers welded to the channel are not permitted.

3.7 Shell, Shell Covers and Shell Supports

3.7.1 Unless otherwise required by the design conditions, the minimum shell thickness, exclusive of corrosion allowance, shall be the greater of ¼ inch or TEMA minimums.

3.7.2 The minimum permissible shell cover thickness specified in TEMA shall be treated as after forming, and shall not be less than ¼ inch nominal.

3.7.3 Shell covers shall not be constructed of flat cover plates welded to the shell.

3.7.4 Shell supports shall be designed to withstand all superimposed loads plus fifteen percent margin. For stacked shells with shell diameter above 40 inches, full wrapper plates shall be considered on the lower shell. Horizontal exchanger supports shall be designed per the L. P. Zick method or approved equal.

3.7.5 Heat exchanger shell shall be checked to ensure bundle installation without binding (grinding of baffles to permit insertion/reinsertion is not acceptable). For horizontal heat exchangers, bundles shall be withdrawn, after insertion, a distance equal to the lesser of two central baffle spaces or 4 feet, then reinserted.

3.8 Flanged External Girth Joints

3.8.1 Unless otherwise noted or approved by the Buyer, body flanges shall be welding neck.

3.8.2 All end flanges shall be checked for axial alignment and gasket face flatness after welding to the shell and stress relieving. Final gasket surface machining shall be done after welding and stress relieving.

3.8.3 For flange bolting where the bolt diameters are 1-1/4 inch or greater, bolt length shall be increased in length by one bolt diameter to permit use of bolt tensioners. Flange dimensions must allow the use of the tensioner.

3.8.4 All gasket inside diameters shall be greater than the corroded inside diameter of the component it will seal.

3.9 Expansion Joints

3.9.1 It is the Seller's responsibility to determine the need for shell expansion for the conditions specified by the Buyer using TEMA rules. When determining the need for an expansion joint in fixed tubesheet heat exchangers, the most stringent of the following shall be considered:

- Normal operating conditions.
- Shell-side start-up; no fluid tube-side.
- Tube-side start-up; no fluid shell-side, shell at most severe ambient temperature.
- Loss of cold fluid on either shell side or tube side.
- Specified turndown operating conditions.
- Hydrotest
- Steamout or other cleaning procedures, when specified.

All conditions and the frequency (based on data supplied by the Buyer) shall be considered by the Seller. The Seller shall recommend the necessity of an expansion joint to achieve the required equipment service life as stated on the MDS.

3.9.2 If an expansion joint is required, shell expansion joint shall be the flanged and flued type.

3.9.3 Flanged and flued expansion joint shall be the same material, with at least the same thickness, as the shell (including corrosion allowance). Minimum thickness shall satisfy both TEMA and ASME Section VIII, Division 1 requirements.

4 Supplemental Testing Requirements

Leak Testing - Where tube to tubesheet welding has been performed, the welds shall be subjected to a 15 psig air and soap bubble test before the hydrostatic test.

5 Quality Assurance

5.1 General Requirements

5.1.1 The Seller's Quality Assurance Program (QAP) Requirements are included in 24590-WTP-3PS-G000-T0001, Supplier Quality Assurance Program.

5.1.2 Seller's QAP Manual shall be submitted to buyer for review in accordance with 24590-WTP-3PS-G000-T0001, Supplier Quality Assurance Program.

5.1.3 Seller's QAP, as a minimum, shall contain the requirements detailed in the Supplier Quality Assurance Program Requirements Data Sheets listed in Section 2 of the MR.

5.2 Quality (Q) Related Components

5.2.1 Seller shall have in place a QA program meeting the requirements of ASME-NQA-1-1989, marked as applicable in Supplier Quality Assurance Program Requirements Data Sheet attached to the MR, and Buyer specification 24590-WTP-3PS-G000-T0001.

5.2.2 Deleted

5.2.3 All items shall be manufactured in accordance with the Seller's Quality Assurance Program that meets the requirements of ASME NQA-1-1989, and has been previously evaluated and accepted by the RPP-WTP Quality Organization.

5.2.4 Seller shall submit their QA program and work plan to Buyer for review prior to commencement of work. The plan shall include documents and procedures to implement the work and include a matrix of essential Quality Assurance elements 7cross referenced with the documents/procedures.

Appendix A
Revision History

Rev. 0 -Issue specification for procurement, advance revision level from Revision B to Revision 0. Changes made in specification wording are highlighted with Revision bars.

Rev. 1 -Issued for Permitting Use.

ISSUED BY
RPP-WTP PDC
INIT 2-3-04
DATE

R10193574

RIVER PROTECTION PROJECT – WASTE TREATMENT PLANT

ENGINEERING SPECIFICATION

FOR

Wet Electrostatic Precipitators

MARK W. HOFFMANN
STATE OF WASHINGTON
0030952
REGISTERED
PROFESSIONAL ENGINEER
1/30/04
EXPIRES 12/10/04

Content applicable to ALARA? ☐ Yes ☐ No

ADR No. **Rev**

Quality Designator
QL
DOE Contract No. DE-AC27-01RV14136

NOTE: Contents of this document are Dangerous Waste Permit affecting.

This document contains 38 sheets, including the cover page.

REV	DATE	REASON FOR REVISION	BY	CHECK	REVIEW	QA	APEM/DEM
0	1/30/04	Issued for Permitting Use			N/A	N/A	

SPECIFICATION No. **Rev**
24590-WTP-3PS-MKE0-TP001 0

Please note that source, special nuclear and byproduct materials, as defined in the Atomic Energy Act of 1954 (AEA), are regulated at the U.S. Department of Energy (DOE) facilities exclusively by DOE acting pursuant to its AEA authority. DOE asserts that pursuant to the AEA, it has sole and exclusive responsibility and authority to regulate source, special nuclear, and byproduct materials at DOE-owned nuclear facilities. Information contained herein on radionuclides is provided for process description purposes only.

Contents

1 Scope 1
1.1 Project Description and Location 1
1.2 Process Description 1
1.3 Acronyms 1
1.4 Definitions 1
1.5 Work in Scope 2
1.6 Work by Others 3
2 Applicable Documents 3
2.1 Referenced Codes and Industry Standards 3
2.2 Related Documents 4
2.3 Referenced Project Documents 4
3 Design Requirements 4
3.1 Performance Requirements 4
3.2 General Design Requirements 5
3.3 Vessel Design Requirements 5
3.4 Vessel Internal SSC Design Requirements 6
3.5 Design Requirements for Ease of Maintenance 8
3.6 Electrical Requirements 9
3.7 Control and Instrumentation Requirements 9
4 Materials 10
5 Fabrication 10
5.1 General 10
5.2 Welding Requirements 10
5.3 Nameplates and Markings 10
6 Tests And Inspections 10
6.1 Shop Testing 10
6.2 Site Performance Testing 12
7 Packaging, Shipping, Handling, And Storage Requirements 12
7.1 General 12
7.2 Vessels and other Equipment 12
8 Field Support 13
8.1 Training 13
8.2 Installation and Startup Support 13
9 Quality Assurance 13
10 Documentation and Submittals 13

10.1 General 13
10.2 Additional Submittals 13

Appendices

Appendix A General Design Data ..... A-i
Appendix B LAW WESP Design Data ..... B-i
Appendix C HLW WESP Design Data ..... C-i
Appendix D Engineering Information Data Sheet ..... D-i
Appendix E Figures ..... E-i

1 Scope

This specification covers the design, fabrication, documentation, testing, and delivery of wet electrostatic precipitators (WESPs) for hazardous waste vitrification (melter) offgas systems. The scope includes four (4) precipitator systems consisting of pressure vessels with internal precipitator components, power supplies and cable, system controls and instrumentation, and utility/service design. There are two precipitator system designs.

1.1 Project Description and Location

The Buyer has entered into a contract with the US Department of Energy for pretreatment and vitrification of waste stored in underground tanks at the Hanford Site in southeast Washington State. The contract specifies that the Department of Energy will retrieve and transfer low-activity and high-level (radioactive) waste to the River Protection Project - Waste Treatment Plant facilities designed, built, and commissioned by the Buyer for pretreatment and vitrification. The Buyer will return the vitrified waste products, intermediate waste products, and secondary wastes to the Department of Energy for interim storage and disposal.

1.2 Process Description

Vitrification of low-activity and high-level waste will be performed using joule-heated melters. Melter offgas will be generated by converting a slurry of radioactive waste and glass formers into molten glass. The vitrification process offgas will consist primarily of air and steam with acid gases and entrained particles. Under normal conditions, offgas leaving the melter will be mixed with air and steam and routed to a submerged bed scrubbing column. Within the submerged bed scrubber, the gas will be quenched while bubbling through packing submerged in water. Condensation will occur, most particles greater than 1μm will be removed, and some acids gases will be absorbed. The offgas will then be directed to the wet electrostatic precipitator for further particulate removal. The offgas system will operate under negative pressure.

The low-activity waste melter offgas systems are depicted on Refs. 2.3.B.1 through 2.3.B.3. The high-level waste melter offgas system is depicted on Refs. 2.3.B.4 through 2.3.B.9.

1.3 Acronyms

HLW	High-Level Waste
ICN	Integrated Control Network
LAW	Low-Activity Waste
PCS	Process Control System
RTD	Resistance-Temperature Device
SSC	System, Structure, and Component
WESP	Wet Electrostatic Precipitator

1.4 Definitions

Buyer	Bechtel National, Inc
Collecting Surface (also known as a collecting electrode)	Surface(s) on which negatively charged particles deposit or collect.
Discharge Electrode	Part that is installed in a high-voltage system to perform the function of charging gas particulate and/or creating an electrostatic field.

Insulator	Device used to physically support and electrically isolate the high-voltage WESP internals.
Owner	Department of Energy
Shall	Indicates a mandatory requirement in order to comply.
Supplier	Primary Seller of the deliverable items (including subcontractors).
Power Supply	Unit used to convert normal service voltage to a high-voltage/high-frequency dc supply.
WESP	The wet electrostatic precipitator, or precipitator, is a complete assembly of mechanical, electrical, control, and structural components for vitrification offgas particulate abatement.

1.5 Work in Scope

A Provide design, fabrication, documentation, and delivery of the following:
1 LAW WESPs complete with appurtenances, quantity per the material requisition.
2 HLW WESPs complete with appurtenances, quantity per the material requisition.

B Major WESP SSCs include:
1 Precipitator vessels with required nozzles.
2 Vessel structural support skirts, mounting rings and anchor chairs.
3 Collecting surfaces and supports.
4 Discharge electrodes and supports.
5 Offgas distribution plates or screens (as required).
6 Vessel internal flush/mist water piping and distribution manifolding (as required).
7 Air purge supply systems internal to the precipitator equipment (as required).
8 High-voltage insulator systems including housings, leads and bushings.
9 Power supplies including ancillary equipment (See Ref. 2.3.A.2).
10 All system controls and control execution requirements for Buyer's design and implementation into the ICN and PCS (see Ref. 2.3.A.2).

C Other work included:
1 Design and supply of high-voltage cable and terminations between power supplies and vessels.
2 Process and instrumentation design support for all required services/utilities from Buyer's supply headers.
3 Furnishing spare parts:
a Six (6) sets of reusable gaskets for all manways/inspection ports, vessel heads and blinded openings on LAW vessels only: three sets for testing and shipment; and three sets unused, tagged, and shipped separately with the vessel.
b Three (3) sets of reusable gaskets for all HLW manways/inspection ports and blinded openings on HLW vessels only.
c One (1) gasket for each HLW vessel head.
d Ten percent spare fasteners for manways/inspection ports, vessel heads, and other blinds, for all vessels.
e One set of insulators for LAW WESPs.
f One set of insulators for HLW WESPs.
4 Shop testing as outlined in section 6.
5 Special Tools: Two (2) complete sets of all special equipment, tools, and/or other components required for installation and/or maintenance of the system. One set will be for LAW and one set will be for HLW.

6 Shim packs for HLW vessels only. See section 3.3.C.4 and Appendix E, Figure 3.

7 Under a separate contract, technical support for WESP system installation, startup and testing at the site.

8 Under a separate contract, technical support for training Owner's operating personnel, including training, operating, and maintenance manuals, and other applicable training material.

1.6 Work by Others

Buyer will be responsible for the following:

A Services, Utilities, and Controls:

1 All raceway, cabling, and connections to the WESP equipment outside of the Seller's scope of work, including the supply, routing and installation of high-voltage cable and fiber-optic communication cable, from the WESP controls to the ICN.

2 Supply of raceway from high-voltage cable between the power supply and vessel.

3 Routing and installation of raceway, high-voltage cable, and terminations between the power supply and vessel.

4 Supply, routing and installation of services and utilities (including instrumentation) to, and between, WESP system components, including water and air services, and level detection instrumentation.

5 Misting spray systems installed in offgas lines upstream of vessels.

6 Supply and routing of vessel drain discharge lines.

7 Connections from Seller's equipment to Buyer's grounding grid.

8 Motor control centers.

9 ICN communication system, including control platform and architecture.

10 PCS operating system.

11 Programming and configuration of the control's graphic display(s) and process flow diagrams into the PCS.

B Mechanical and Structural:

1 Equipment locations and dimensional constraints.

2 Structural supports, foundations, embeds, leveling channels and enclosures (to be coordinated with Seller).

3 Structural access platforms (to be coordinated with Seller).

4 Piping design and routing.

5 Bolts, nuts, gaskets at interfaces to Buyer-supplied equipment and structures.

C Other Work Provided by Buyer:

1 Job site material receiving, storage, and field installation of Seller's equipment.

2 Overhead maintenance crane(s).

3 Standard maintenance tool sets.

4 Site testing.

2 Applicable Documents

2.1 Referenced Codes and Industry Standards

National Fire Protection Association (NFPA) – NFPA 70 (1999), National Electrical Code, Article 250, Grounding

2.2 Related Documents

Other project specifications, standards, and standard details as listed or referenced in section 2 of the material requisition shall be used as applicable for the design and fabrication of the WESPs.

2.3 Referenced Project Documents

A Specifications:

1 24590-WTP-3PS-MV00-TP001, Engineering Specification for Pressure Vessel Design and Fabrication.

2 24590-WTP-3PS-EVR2-T0001, Engineering Specification for Wet Electrostatic Precipitator (WESP) Power Supply.

3 24590-WTP-3PS-G000-T0003, General Specification for Packaging, ~~Shipping~~, Handling, and Storage Requirements.

4 24590-WTP-3PS-JQ07-T0001, Engineering Specification for Instrumentation for Package Systems.

5 24590-WTP-3PS-G000-T0001, General Specification for Supplier Quality Assurance Program Requirements.

6 24590-WTP-3PS-MV00-TP002, Engineering Specification for Seismic Qualification Criteria for Pressure Vessels.

7 24590-WTP-3PS-FB01-T0001, Engineering Specification for Structural Design Loads for Seismic Category III & IV Equipment and Tanks.

B Drawings:

1 24590-LAW-M6-LOP-P0001, P&ID – LAW Primary Offgas Process System, Melter 1.

2 24590-LAW-M6-LOP-P0002, P&ID – LAW Primary Offgas Process System, Melter 2.

3 24590-LAW-M6-LVP-P0001, P&ID – LAW Secondary Offgas/Vessel Vent Process System, Melters Secondary Offgas.

4 24590-HLW-M6-HOP-P0001, P&ID – HLW Melter Offgas System – Melter 1 – Primary Offgas Scrubber.

5 24590-HLW-M6-HOP-P20001, P&ID – HLW Melter Offgas System – Melter 2 – Primary Offgas Scubber.

6 24590-HLW-M6-HOP-P0002, P&ID – HLW Melter Offgas System – Melter 1 – Primary Offgas WESP.

7 24590-HLW-M6-HOP-P20002, P&ID – HLW Melter Offgas System – Melter 2 – Primary Offgas WESP.

8 24590-HLW-M6-HOP-P0003, P&ID – HLW Melter Offgas System – Melter 1 – Secondary Offgas Treatment Sheet 1 of 2.

9 24590-HLW-M6-HOP-P20003, P&ID – HLW Melter Offgas System – Melter 2 – Secondary Offgas Treatment Sheet 1 of 2.

10 24590-WTP-MV-M59T-00026, Anchor Bolt Chair Details for Vertical Vessels

3 Design Requirements

3.1 Performance Requirements

A The LAW and HLW vitrification facilities are expected to operate for approximately 40 years. Furnish WESPs for both facilities that comply with the following:

1 The general design criteria in Appendix A.
2 The operating conditions for LAW and HLW in Appendices B and C, respectively.
3 The performance/design requirements for LAW and HLW in Appendices B and C, respectively.
4 The availability requirements for LAW and HLW in Appendices B and C, respectively.

3.2 General Design Requirements

A Each WESP shall be stand-alone and have the capability to handle the design offgas flow from the melter and submerged bed scrubber, as well as purge air (if used) introduced at the WESP.
B Design WESP vessel and insulator housings to confine offgases and to undergo no structural or functional damage during temperature or pressure excursions.
C Seller shall consider the following during WESP design: For both LAW and HLW WESPs, the power supply and the precipitator vessel will be located in different rooms. See Ref. 2.3.A.2 for approximate cable lengths between proposed power supply locations and vessels.
D Provide completed data sheet in Appendix D.
E Seller shall ensure that SSCs common to each LAW WESP are identical in design and from the same supplier/manufacturer. Seller shall also ensure the same for the HLW vessel/precipitator design.
F All WESP SSCs for both LAW and HLW systems shall be commercial grade except for the vessels, and any other component or nozzle connection affecting the offgas confinement function of the vessels within Seller's scope. See section 9 of this specification for specific quality assurance requirements pertaining to vessels and other system components.

3.3 Vessel Design Requirements

A General:
1 The pressure vessels for all WESPs shall be designed and fabricated in accordance with Ref. 2.3A.1 and any additional requirements defined in this specification. Notify Buyer for resolution of any requirement conflicts.
2 Seismic Analysis: All vessels and power supplies shall be designed per Seismic Category (SC) III requirements. See Ref. 2.3.A.7 for SC-III definitions and design requirements. See Ref. 2.3.A.6 for general seismic qualification criteria.
3 Fatigue Analysis: See Appendix A for fatigue analysis requirements.
4 Other Loadings: See Ref 2.3.A.1 and Appendices B and C of this specification for additional LAW and HLW vessel loadings.

B LAW Precipitator Vessels:
1 Vessels shall be floor mounted.
2 Vessels shall be designed to fit within the physical envelope defined in Figures 1 and 2 of Appendix E.
3 Vessel structural support shall consist of a skirt and foot plate with weep holes and access for visual inspection. Provide eight (8) anchor bolt "chairs" around the base of the skirt, equally spaced and straddling the vessel centerline. Details of the chairs to be used, Type 2a, are shown in Ref. 2.3.B.10.
4 Orient known required nozzles as shown in Figure 1 of Appendix E. Coordinate with Buyer to determine final nozzle elevations.
5 Vessels shall have flanged removable top heads to access internal components for maintenance. Heads may be flat, dished, or elliptical.
6 Design vessel head to minimize impact to adjacent insulators and associated housings during handling.
7 Design head/vessel mating interface to retain seal integrity after the head has been removed and replaced.
8 Design vessel head to be lifted and moved by a bridge crane with a standard C-hook.

9 Service penetrations through the top vessel heads are not permitted.

10 Connections to components that are not consumables or not removable shall be welded or otherwise made permanent.

C HLW Precipitator Vessels:

1 Vessel shall be floor mounted.

2 Vessels shall be designed to fit within the physical envelope defined in Figures 3 and 4 of Appendix E.

3 Vessel structural support shall consist of a skirt and foot plate with weep holes and access for visual inspection. Provide eight (8) anchor bolt "chairs" around the base of the skirt, equally spaced and straddling the vessel centerline. Details of the chairs to be used, Types 2a thru 2f, are shown in Ref. 2.3.B.10. Coordinate with Buyer to finalize chair orientation and tolerances.

4 For each anchor bolt chair, provide a shim pack consisting of the following 10" square stainless steel plates:
   a 2 each 1/4" thick plates.
   b 1 each 1/8" thick plate.
   c 2 each 1/16" thick plates.

5 Orient known required nozzles as shown in Figure 4 of Appendix E. Coordinate with Buyer to determine final nozzle elevations.

6 Vessels shall have flanged removable top heads. Heads may be flat, dished, or elliptical

7 Design vessel head to minimize impact to adjacent insulators and associated housings during installation handling.

8 Design head/vessel mating interface to retain seal integrity after the head has been placed at installation in accordance with Seller's written instructions.

9 Design vessel head to be lifted and moved by a crane with a standard C-hook.

10 Service penetrations through the top vessel heads are not permitted.

11 Connections to components that are not consumables or not removable shall be welded or otherwise made permanent.

12 If a manway/inspection port is required for final alignment of electrodes before hot startup, design nozzle flange and blind flange plate to be seal welded by Buyer after completion of non-radioactive testing.

3.4 Vessel Internal SSC Design Requirements

A General:

1 Vessel internal SSC design shall account for thermal expansion, and simplify fabrication and maintenance requirements to the extent possible.

2 Design vessel internal SSCs to minimize the occurrence of dead gas pockets or areas where particulate or liquid might tend to accumulate.

3 Vessel internal SSCs not affecting the offgas confinement function of the vessels do not need to be seismically qualified.

4 LAW vessel internal SSCs shall be designed to be removable/replaceable if the Seller cannot guarantee zero maintenance for the life of the facility.

5 HLW vessels and their internal SSCs, excluding the insulators, will not be accessible after hot (radioactive) startup of the offgas systems. The internal SSCs will be designed for zero maintenance for the life of the facility.

B Insulators:

1 Insulators shall be ceramic, with a minimum alumina concentration of 97 percent.

2 Insulator enclosures and internal buses shall be designed with suitable internal surfaces and electrical clearances to prevent arcing.

C Collecting Surfaces:

1 Given the vessel envelope constraints, furnish the required collection surface area to meet the performance requirements in Appendices B and C.

2 Buyer prefers round pipes for ease of cleaning. Plate-type collection surfaces are not acceptable.

3 The design shall provide the means of maintaining the parallel alignment of adjacent collection surfaces after installation. Seller shall ensure that internal assemblies cannot be bent, buckled, or distorted prior to startup by following prescribed handling procedures.

4 The design shall prevent offgas from bypassing collection zones.

D Discharge Electrodes:

1 Furnish mechanically stable discharge electrodes of rigid construction or supported in a rigid frame. Use of weighted, hung, non-rigid discharge electrodes is not acceptable.

2 Discharge electrodes and collecting surfaces shall be plumb. The design and fabrication of discharge electrodes and collecting surfaces shall be such that the required alignment can be preserved after installation while permitting the necessary thermal expansion without warping.

3 The high-voltage support system and rigid discharge electrode design shall prevent swaying or movement of the electrodes at the design flow rates shown in Appendices B and C.

E Offgas Distribution:

1 The inlet air distribution system shall be such that the offgas shall pass across each collecting surface uniformly.

2 If possible, it is preferred that the Seller use a design that does not use perforated plate(s) or screen(s).

F Cleaning/Flushing:

1 Seller shall provide water flushing systems to periodically wash solids from the collecting surfaces, discharge electrodes, and internal vessel surfaces to prevent solids buildup that would impair operation or collection efficiency. Provide top and bottom flushing systems in each HLW vessel as depicted in Ref. 2.3.B.6 and 7. Provide only a top flushing system in each LAW vessel. Recirculating systems are not acceptable.

2 Buyer intends to provide misting capabilities in the offgas line upstream of each vessel, at a nominal flowrate of approximately 25 gallons per hour when required. Seller is permitted to add misting capabilities in the LAW vessels but not in the HLW vessels. Seller shall coordinate with Buyer to determine final misting requirements.

3 Periodic flushing, continuous misting spray nozzles, or other industry standard forms of washing are acceptable.

4 Water use for WESP operation/cleaning shall be minimized. Seller shall attempt to limit water consumption to 500 gallons per day for misting applications (if used) and 500 gallons for flushing once every several days.

5 Minimize WESP downtime during flushing. Misting applications shall not affect normal WESP operations.

6 Design consideration shall be given to minimizing blockages in nozzle discharge orifices and eliminating uncontrolled drips.

7 The spray headers shall not act as a ground for arcing.

8 The water quality and supply pressure will be as identified in Appendix A, unless otherwise recommended, and justified by the Seller.

9 Buyer may fill the vessel with decontamination solutions (HLW only) or hot or cold water for soaks/washes after hot startup, but only during offgas system shutdowns. Buyer intends to utilize the flush water systems to introduce the cleaning mediums. Seller shall consider and advise Buyer of design impacts to vessels and vessel internals.

G Purge Air:

1 If required, provide purge air around electrical components (such as the insulators) to reduce particulate buildup, salt scaling, and condensation, and to prevent arcing.

2 Specify temperature and flowrate requirements for the system. The air supply quality will be as identified in Appendix A, unless otherwise recommended, and justified by the Seller.

3 Minimize the amount of air used to the extent practical.

3.5 Design Requirements for Ease of Maintenance

A General:

1 The LAW and HLW vitrification facilities are expected to operate for 40 years. Seller shall consider this operational duration in the design of all components, including those to be removed/replaced and/or upgraded over the operational life of the facility.

2 Component design shall be modularized and/or designed to facilitate ease of component replacement, repair, or upgrade wherever practical. Submit a modularization plan for review and approval.

3 Seller shall ensure that component design accounts for the planned maintenance frequencies for LAW and HLW WESP SSCs defined in Appendices B and C, respectively.

4 WESP components designed to be removed/replaced, weighing more than 20 lb, shall be equipped with lifting attachments for use with a C-hook. Mount lifting attachments to minimize rotation/swinging during handling.

5 Seller shall ensure that WESP components designed to be removed/replaced will not damage adjacent SSCs when properly handled.

6 If required, provide two sets of specialty lifting devices (spreader bars, yokes, etc.) to interface with Buyer's crane and C-hook for WESP component handling: one set for LAW WESPs, and the other for HLW WESPs.

B Design WESP SSCs for the following access restrictions:

1 Electrical and Control Equipment: Access to electrical and system control equipment external to the vessel rooms, for both LAW and HLW WESPs, will be unrestricted.

2 HLW vessels:

a Vessels and internal components, excluding top insulator housing covers and the insulators themselves (via the top insulator housing covers), will not be accessible after hot startup. Access to the insulators will be possible only when the associated melter has been deactivated, or is not processing feed, and the offgas system flushed to bring radiation and contamination to safe levels.

b After vessel and vessel internals have been installed and the surrounding structure completed, intact removal and replacement of vessel internals will not be possible due to spatial constraints and radiation contamination.

c If additional alignment of vessel internals is required after installation and prior to hot startup, Seller must provide adequate access through suitably located manway/access ports in the vessel.

d Buyer will provide temporary access platforms around vessels during installation and cold (non-radioactive) startup, as required.

3 LAW vessels:

a After hot startup, vessel access (both internal and external) will be possible only when the associated melter has been deactivated, or is not processing feed, and the offgas system flushed to bring radiation and contamination to safe levels.

b Personnel accessing the vessels after hot startup will be in multilayered personal protective equipment and on supplied air systems.

c Buyer, in coordination with Seller, will provide structural platforms around the vessels to access insulator housings and head flange bolting.

d Buyer will provide access hatches through the floor, centered over each vessel, for removing/ replacing internal SSCs. The access hatches will be 11'-0" square.

e The corridor above the vessel rooms will be served by a bridge crane with a capacity of atleast 20 tons. The crane, with C-hook, will be able to pick and place equipment in the vessel rooms through the access hatches. The corridor may be used to reassemble pressure vessel internals and other components if necessary.

C Other LAW Vessel Design Requirements:

1 LAW pressure vessel design shall consider personnel access requirements for replacing and aligning internal components after both cold and hot startup of the offgas systems. No personnel access via the manway/inspection ports will be permitted after hot startup. However, manual or remote operated tools may be inserted if required.

2 For LAW pressure vessel design, Seller shall consider ease of maintenance when determining vessel head bolting/fastener configuration. Coordinate with Buyer to finalize configurations.

3.6 Electrical Requirements

A Provide power supplies and associated high-voltage cable and terminations for each WESP accordance with Ref. 2.3.A.2. Depending on the final termination housing configuration, Buyer may provide load support via the building structure.

B Vessel Grounding: Furnish at least two (2) grounding connections on opposite sides of the vessel skirt, including pads with terminal lugs for #4/0 AWG ground wire, for interface with Buyer's grounding system in accordance with Ref. 2.1.A. All flanges shall be electrically bonded either by a welded or a bolted stainless steel jumper in a minimum of two locations.

3.7 Control and Instrumentation Requirements

A Controls:

1 Provide complete dedicated power and process controls (both hardware and software), for each WESP, in accordance with Ref. 2.3.A.2.

2 System controls shall include, but not be limited to, the following:

a Power supply with voltage control.
b Water flushing/misting control.
c Power supply cooling control (if required).
d Purge air control.
e Alarms and interlocks.

3 Control logic and application software for the WESP and support utility systems shall reside in Seller's control system.

4 Controls for the WESP and support utility systems shall be Seller-configured and programmed for Buyer's monitoring, auto-start, and stop, and any control signal interfaces from the Buyer's ICN PCS.

5 Buyer recognizes that Seller may have a standard control system with proprietary hardware and software. See Ref. 2.3.A.4 for integration of Seller's proprietary components with Buyer's ICN.

B Process and Instrumentation Design:

1 See Ref. 2.3.A.4 for packaged system instrumentation design requirements.

2 From Buyer's supply headers, coordinate with Buyer to provide complete designs of all process services and associated instrumentation for each WESP.

3 Process service and instrumentation design support shall include, but not be limited to:

a Purge air (as required).
b Water flushing/misting washing (as required).

c Cooling (as required).

4 Materials

See Appendix A for required/acceptable materials for WESP vessels, wetted internal components, nonwetted components, and structural steel. See Ref. 2.3.A.2 for power supply and control equipment requirements.

5 Fabrication

5.1 General

A Vessels: Fabrication of vessels and structural attachments shall conform with Ref. 2.3.A.1.

B Other WESP Components: Fabrication of WESP components other than vessels, nozzles, and welded structural components shall be per the Supplier's and/or industry standards for the intended service.

5.2 Welding Requirements

A Vessels: Welding requirements for vessels, nozzles, and structural attachments shall conform with Ref. 2.3.A.1.

B Other WESP components: Welding requirements for internal WESP components shall be per industry standards for the intended service.

C Nondestructive examination of vessels and structural attachments shall be in accordance with Ref. 2.3.A.1 with exceptions noted in Appendix A.

5.3 Nameplates and Markings

A Provide corrosion-resistant danger signs at all points of high voltage, reading: "DANGER - HIGH VOLTAGE".

B Provide additional nameplates and equipment tagging in accordance with the Purchase Order.

6 Tests And Inspections

6.1 Shop Testing

A Vessels, including nozzles, structural attachments, and any other component affecting the containment function of the WESP, shall be tested in accordance with the requirements of Ref. 2.3.A.1.

B In addition to the hydro test requirements identified in Ref. 2.3.A.1, Seller shall also conduct vacuum tests on all vessels.

C Power supplies and control equipment shall be tested in accordance with the requirements of Ref. 2.3.A.2.

D Load Tests: Lifting lugs on all vessels and vessel internals shall be proof load tested at 150 percent of the measured dry weight of the components below. Also provide applicable test certification for lifting devices.

1 Head assembly for LAW and HLW vessels.

2 Vessel internals for LAW and HLW vessels (as applicable).

3 Complete vessels with internals (LAW and HLW).

E Prior to shipment, Seller shall assemble and operate each WESP to verify complete system functionality, including flush/mist water systems, purge air systems, insulators and electrodes, power supplies, electrical controls, and instrumentation. Seller shall be responsible for providing the following equipment and services:

1 High-voltage cable (with terminations) similar to the maximum designed length and configuration.

2 Source for flush/mist water purge. Water quality as referenced in Appendix A.

3 Source for purge air. Air quality as referenced in Appendix A.

4 Atomized spray mimicking the offgas. May be an air stream saturated with salt-laden water vapor. Flow rates as shown in Appendices B and C.

5 Test and control instrumentation as required.

6 Structural supports as required.

F Seller shall perform one (1) successful functional test on each WESP with no system malfunctions. The test shall include a continuous four day run using the saturated air stream (includes restart after flushing) and additional system checks conducted before or after the run. Each test shall be fully documented with photographs. During the test the Seller will perform the following:

1 Perform vessel flushing once near the end of the continuous run. Successful operation shall be defined by no visible sign of particulate buildup on any internal surface below the flush nozzle elevation, by no long term pooling deeper than approximately 1/4 inch on internal surfaces, and by using no more than 500 gallons of water. After the flushing cycle is complete document the time required to return to operation at normal voltage.

2 For LAW WESPs, the internal misting nozzles shall not be operated during the continuous run.

3 Measure pressure differential relative to gas flow across vessel (between gas inlet and gas outlet) roughly every hour for the duration of the continuous run, excluding flush cycle and system restart.

4 Monitor spark rate for the during of the continuous run. Successful operation shall be defined by no electrical shorting beyond the expected normal spark rate. In addition, determine the voltage at which abnormal/excessive sparking begins to occur.

5 Monitor power supply voltage, current, and power consumption for the duration of the continuous run.

6 Provide the Seller-determined flowrate of purge air to each insulator housing during the continuous run. After the four day continuous run, confirm that the insulators are free of any visible signs of particulate and water buildup.

7 Either before or after each continuous run, Seller shall operate the misting system (LAW only) and the flushing system(s) long enough to verify by visual means that water distribution is even over the cross-section of the vessel. For the misting system, verify coverage using not more than 25 gallons per hour. For the flushing system(s), verify coverage using not more than 100 gallons per minute.

8 Either before or after the continuous run, Seller shall confirm even gas distribution through approximately 20 to 30 collecting tubes for one LAW WESP and one HLW WESP, using a method to be agreed upon with the Buyer. Gas distribution shall be confirmed using both normal and maximum design offgas flows. Acceptable distribution will show velocities through selected tubes not varying by more than 15 percent, based on constant gas flow. Any physical modifications to the internals required to successfully pass the tests shall also be completed on the similar untested vessel(s).

Provide two weeks advance notice to Buyer prior to conducting tests. After conclusion of each test, Seller shall disassemble, dry, and clean equipment in preparation for shipment.

G Buyer shall have access to all testing records. Furnish a copy of all certified test data and test results, whether witnessed or not.

6.2 Site Performance Testing

A Under a separate contract and prior to site testing, Seller shall conduct a thorough inspection with Buyer to ensure that each WESP has been installed in accordance with Seller's drawings and instructions. Notify Buyer of any deficiencies.

B Under a separate contract and prior to conducting installation inspections, advise Buyer on the specific inspections to be carried out, and the advance notice required for performing the inspections.

C Buyer will conduct performance testing on each installed melter offgas system (WESP included) to demonstrate operational and performance guarantees. All testing will be conducted before placing the systems into radioactive service.

D Testing will demonstrate operability of the WESP under various melter offgas operational conditions. The WESP must operate in compliance with Seller's performance guarantees and expected performance capabilities.

E All Seller-supplied systems and components will be utilized during testing.

F Buyer will notify Seller a minimum of one month prior to start of testing. Buyer will also inform Seller of test scope.

G Seller shall coordinate with Buyer to develop recommended WESP system test procedures to be used in conjunction with the test procedures for the overall offgas system.

H Seller shall provide a list of specialty equipment for component testing, tuning, checkout, and maintenance, based on Buyer's test scope.

I As required, Seller shall provide appropriate hardware, software, and support services to perform integration testing of the control portion of the WESP with the ICN.

J Data accumulated during testing shall be measured and recorded by Buyer, with Seller assistance as required.

K During testing, Seller shall document problems uncovered; assess root causes; and present findings, recommendations, and courses of action, which shall be reviewed in consultation with Buyer, prior to implementing any and all repairs/modifications. A complete written report shall be provided to Buyer.

L Remedial actions required to correct deficiencies uncovered in Seller's equipment during performance testing shall be made by Seller at his expense. Modifications shall be performed only after receipt of written approval by Buyer. Depending on the extent of the modifications, the performance testing will be repeated, and applicable costs involved with the repeat testing of the WESP shall be borne by Seller.

7 Packaging, Shipping, Handling, and Storage Requirements

7.1 General

1/30/04

General Requirements: Seller shall adhere to Ref. 2.3.A.3 for general packaging, ~~shipping~~, handling, and storage requirements for all WESP components.

7.2 Vessels and other Equipment

A Vessels: In addition to the general requirements in Ref. 2.3.A.1, prepare vessels for shipment in accordance with Ref. 2.3.A.3.

B Clearly mark lifting points.

C Install shipping stops, bolts, ties, etc., in all devices prior to shipment.

D Match mark and package components to provide for rapid and accurate site installation.

E Seller shall ensure that the alignment and shape of discharge electrodes and collecting surfaces can be maintained and/or properly realigned prior to installation per Seller's handling instructions.

8 Field Support

8.1 Training

Under a separate contract, Seller shall provide operations and maintenance training to Owner's representatives at the site (five working days total), including provision of operating and maintenance manuals and other applicable training materials.

8.2 Installation and Startup Support

A Under a separate contract, Seller shall provide technically competent personnel, including representatives of sub-sellers, to advise and consult during installation, startup, testing, and commissioning.

B Seller shall provide the following to facilitate field installation in a timely and efficient manner:

1 Installation procedure describing sequence of installation and tolerances backed up by installation drawings showing lifting provisions for all heavy and/or bulky components necessary to properly handle them, including design and shop installation of lifting and tailing lugs as required.

2 Adjustment procedures for alignment of WESP internals prior to and during installation.

3 Components are to be delivered in the largest, most complete assemblies practical. Components will be clearly marked with weight, center of gravity, and rigging points identified. Components that contain special coatings or linings that could be damaged by welding or improper handling shall also be marked.

9 Quality Assurance

A Seller shall perform all work in this specification in accordance with a Buyer-approved quality assurance plan (see Ref. 2.3.A.5), and the supplier quality assurance data sheets included as part of the material requisition. Seller shall ensure that all software used and programs developed for use in design conform to the supplier quality assurance data sheets. Seller shall be responsible for flowdown of applicable quality assurance requirements to all sub-sellers.

10 Documentation and Submittals

10.1 General

A Seller shall comply with the requirements of Forms G-321-E and G-321-V of the material requisition. Furnish drawings, calculations, reports, specifications, procedures, test results, and all other required documents.

B All drawings and documents submitted for review shall be:

1 Checked and signed off by the Seller's qualified representative.

2 Identified by their own unique name and identification number.

3 In US customary units.

10.2 Additional Submittals

A In addition to examination and verification reports identified on Form G-321-V of the material requisition, Seller shall submit original radiographic film.

B Seller shall submit photographs depicting progress of vessel/vessel internals fabrication. Each photo shall include a sequence number, description, tag number, and date

C Seller shall furnish pricing and availability for all spare parts.

Appendix A

General Design Data

Appendix A
General Design Data

The following information applies to both LAW and HLW WESPs.

General Location Information

Site Elevation:	662-684 ft	Location of Project:	S.E. Washington State

Available Services

	Instrument/Plant Service Air
Dew Point:	-40°F at 100 psig. Plant service air is oil free instrument air supplied through carbon steel pipe.
Supply Pressure:	90 to 150 psig
Quality:	ANSI/ISA S7.0.01-1996

	Demineralized Water	Process Water
Supply Temp:	60-80°F	60-80°F
Supply Pressure:	60-90 psig	60-90 psig
Quality:	demineralized, filtered <2μm; 40 ppm chlorides, 10 ppm sulfates, 340 ppm tds, 300 ppm tss, 170 ppm total hardness max	raw river water filtered <2μm

Available Power Supplies

For Instrumentation:	120 Vac, 1ϕ, 60 Hz, 480 3ϕ, 60 Hz
For Power Supplies	See Ref. 2.3.A.2

Vessel Materials

Vessel:	6% Mo alloy (e.g. AL-6XN)	Non-Contact (offgas and fluids) Metal Components:	304L or 316L ss (note 1)
Wetted Metal Components:	6% Mo alloy (e.g. AL-6XN)	External Structural Steel:	304L or 316L ss (note 1)

Other Vessel Design Requirements

Surface Corrosion Allowance:	0.04" (minimum internal)	Code Stamp:	required for all vessels
Vessel Fatigue Analysis:	not required	National Board Registration:	required for all vessels
Other Vessel Loadings:	1. For HLW vessels only, full decontamination solution soak with max specific gravity of 1.07. Do not consider this loading in seismic analyses.		
	2. Live loads generated by water flushing. Include these loads in seismic analyses.		
Nondestructive Examinations:	UT and RT (and PT as applicable) per Ref. 2.3.A.1		

Notes:

1. Stainless steel material SS304L and SS316L shall have a maximum carbon content of 0.030%. Nonwelded specialty items excluded from this requirement.
2. For Project use only – This document has considered/applied the requirements of section 14.10 of the project design basis, Document No. 24590-WTP-DB-ENG-01-001.
3. Active vessel utility and service connections shall be welded stub-end with the following exceptions which shall be gasketed with ANSI B16.5 150# flanges. Flush /mist water connections on LAW vessels. Purge air connections on all vessels (only if connections are integral to the housings that must be removed for servicing the insulators).
4. Manways shall be blinded with ANSI B16.5 150# flanges. Clad flange not permitted.
5. Gaskets may be EPDM or equivalent, except for the HLW vessel head flange, which shall be a spiral-wound graphite-filled 6% Mo alloy gasket with inner and outer support rings of the same material.
6. Bolts for noncontact (offgas and water) applications shall be ASTM A193 Grade B8 or equivalent. Bolting material for contact applications shall be SB 574, N 10276.
7. For all vessels, Buyer supplied drain and offgas piping is schedule 10S. All other Buyer supplied piping is schedule 40S. Seller shall taper welded stub-end utility and service nozzles as required to match Buyer supplied piping schedule class.

Appendix B

LAW WESP Design Data

Appendix B
LAW WESP Design Data

Conditions in Equipment Rooms:	For Pressure Vessels	For Power Supply and Control Equipment	Access Corridors (above Rooms for Pressure Vessels)
Temperature:	max: 113°F, min: 59°F (radiant heat sources may raise temp to 150°F)	max: 95°F, min: 50°F	max: 95°F, min: 50°F
Pressure:	-1 to –1.4 in w.c.	-0.1 to –1 in w.c.	-0.1 to –1 in w.c.
Relative Humidity:	30% - 100%	30% - 60%	30% - 60%
Contamination Level:	(C5) surface contamination ≥100,000 dpm/100cm^2	(C2) surface contamination <1,000 dpm/100cm^2	(C3) surface contamination 100,000≥x≥1,000 dpm/ 100cm^2, may elevate to C5 when hatch is open
Radiation Level:	R5: high - 100 mrem/hr (decontaminated for personnel access)	R2: 0.25 mrem/hr	R3: 2.5 mrem/hr
Personnel Access:	access not normally permitted (plastic suits and supplied air)	unrestricted area – normal work clothes	contaminated area –(protective clothing, gloves, respirator)
Electrical Hazard Class:	non hazardous	non hazardous	non hazardous

WESP Vessel Configuration

Offgas Nozzle Orient (In):	side mounted	Offgas Nozzle Orient (Out):	side mounted
Vessel Orientation:	vertical	Offgas Flow Path thru Vessel:	bottom to top

Inlet Process Conditions

Offgas Flow Rate:	Nominal:	1400 acfm	Design Range:	1000-2000 acfm
Offgas Temp:	Nominal:	121 °F +/- 15 °F	Design Range:	45-170 °F (minimal cycling)
Offgas Pressure:	Nominal:	-45 inches w.c.	Design Range:	+1 atm to -1 atm
Offgas Humidity:	Nominal:	100 %	Design Range:	0 – 100% (with minor solution entrainment - see note 2)
Particulates:	Inlet Conc:	10 to 300 mg/m^3		
Size:	Range:	by mass - 50% smaller than 0.50 μm, 80% smaller than 1.0 μm, 90% smaller than 2.0 μm		

Performance Requirements

Solids Removal:	99.5 % overall, 99 % for ~0.3μm particles based on 2000 acfm
Equipment Service Life:	Pressure vessel and attached nozzles and structural components: 40 years
	Pressure vessel and permanent internal precipitator components: 40 years
	Pressure vessel consumable internal precipitator components (including insulators):
	minimum of 7 years. Consider ease of replacement in design.
	Power supply and control equipment: minimum of 7 years. Consider ease of upgradeability.
	Instrumentation systems: design for 40 years. Consider ease of upgradeability in design.
	Power, control communications cabling: design for 40 years. Consider ease of upgradeability.
Availability:	97% rolling average over each 7 year period between melter changout.
Planned Maintenance Freq:	Equipment in Pressure Vessel Rooms: Approximately every 5-7 years. Equipment outside
	Pressure Vessel Rooms: Regular scheduled maintenance will be performed

Notes:

1. Low end of offgas flow rate design range occurs after melter has stopped feeding. The offgas from two idled melters can be combined to permit one offgas system to be isolated, flushed, and accessible for maintenance.
2. It is anticipated that offgas humidity will not fall below 75 percent, based on upstream scrubber operation.

Predicted LAW Offgas Analysis at Inlet – Bounding Conditions for All Feed Types

	% by Volume	g/m3	mol/l
Cations			
Al^{3+}	0.0%	1.54E-04	5.71E-09
Ag^{+}	0.0%	3.88E-07	3.60E-12
B^{3+}	0.0%	7.18E-05	6.64E-09
Ba^{2+}	0.0%	3.28E-08	2.39E-13
Bi^{3+}	0.0%	5.46E-07	2.61E-12
Ca^{2+}	0.0%	4.98E-04	1.24E-08
Cd^{2+}	0.0%	6.59E-06	5.86E-11
Cr^{3+}	0.0%	7.88E-04	1.52E-08
Cs^{+}	0.0%	4.54E-10	3.42E-15
Fe^{3+}	0.0%	1.80E-05	3.22E-10
H^{+}	0.0%	3.37E-10	3.34E-13
Hg^{2+}	0.0%	8.27E-04	4.12E-09
K^{+}	0.0%	6.60E-03	1.69E-07
La^{3+}	0.0%	1.47E-08	1.06E-13
Li^{+}	0.0%	3.23E-08	4.65E-12
Mg^{2+}	0.0%	9.44E-05	3.89E-09
Mn^{4+}	0.0%	4.91E-07	8.94E-12
Mo^{6+}	0.0%	5.30E-06	5.52E-11
Na^{+}	0.0%	1.72E-03	7.50E-08
Ni^{2+}	0.0%	5.30E-06	9.02E-11
Pb^{2+}	0.0%	1.19E-05	5.76E-11
Se^{4+}	0.0%	1.88E-05	2.38E-10
Si^{4+}	0.0%	3.86E-03	1.37E-07
Sr^{2+}	0.0%	3.65E-09	4.17E-14
Ti^{4+}	0.0%	2.79E-03	5.84E-08
U^{4+}	0.0%	1.91E-08	8.02E-14
Zn^{2+}	0.0%	9.88E-05	1.51E-09
Zr^{4+}	0.0%	5.77E-07	6.33E-12
Anions			
Cl^{-}	0.0%	3.01E-04	8.50E-09
$H_2BO_3^{-}$	0.0%	1.54E-09	2.53E-14
HBO_3^{2-}	0.0%	1.46E-16	2.44E-21
BO_3^{3-}	0.0%	1.23E-24	2.09E-29
F^{-}	0.0%	5.21E-05	2.74E-09
I^{-}	0.0%	5.90E-11	4.65E-16

Anions Continued	% by Volume	g/m3	mol/l
IO_3^-	0.0%	1.06E-220	6.07E-226
NH_4^+	0.0%	4.42E-05	2.45E-09
NO_3^-	0.0%	6.17E-08	9.95E-13
O^{2-}	0.0%	9.24E-03	5.78E-07
OH^-(aq)	0.0%	1.25E-13	7.37E-18
$H_2PO_4^-$	0.0%	3.53E-07	3.64E-12
HPO_4^{2-}	0.0%	7.14E-11	7.44E-16
PO_4^{3-}	0.0%	2.71E-15	2.85E-20
$HSiO_3^-$	0.0%	4.33E-10	5.62E-15
SiO_3^{2-}	0.0%	2.29E-16	3.01E-21
HSO_3^-	0.0%	1.73E-04	2.13E-09
SO_3^{2-}	0.0%	6.67E-08	8.33E-13
Organics			
Non-Volatile	0.0%	3.40E-03	1.16E-08
SVOC	0.0%	1.08E-02	8.43E-08
VOC	0.0%	3.16E-05	2.46E-10
Sucrose	0.0%	2.78E-02	8.12E-08
Water			
H_2O	13.8%	8.16E+01	4.53E-03
Aerosols	0.0%	7.32E-02	4.06E-06
Gases			
Ar	0.8%	1.00E+01	2.51E-04
CO	0.0%	2.78E-01	9.91E-06
CO_2	2.6%	3.73E+01	8.47E-04
HCl	0.0%	3.22E-03	8.82E-08
HF	0.0%	5.19E-03	2.59E-07
I_2	0.0%	4.31E-05	1.70E-10
N_2	64.4%	5.94E+02	2.12E-02
NH_3	0.0%	1.21E-02	7.10E-07
NO	0.7%	6.53E+00	2.18E-04
NO_2	0.5%	8.31E+00	1.81E-04
NaCl(s)	0.0%	4.04E-02	6.91E-07
NaF(s)	0.0%	2.98E-02	7.09E-07
NaI(s)	0.0%	1.78E-08	1.19E-13
O_2	17.3%	1.82E+02	5.69E-03
P_2O_5(s)	0.0%	2.64E-05	1.86E-10
SO_2	0.0%	2.86E-02	4.47E-07
Total	100.0%	9.21E+02	3.29E-02

LAW Radionuclides – Maximum Dosages	Bq/m^3	mol/l
^{3}H	1.12E+05	1.05E-13
^{14}C	1.24E+05	5.34E-11
^{60}Co	2.41E+00	9.62E-19
^{90}Sr	3.02E+02	6.65E-16
^{90}Y	3.02E+02	1.67E-19
^{99}Tc	2.37E+04	3.82E-10
^{126}Sn	4.89E-02	3.70E-16
^{129}I	2.51E+03	3.22E-09
$^{129}I(s)$	8.78E-01	1.13E-12
^{134}Cs	4.72E-02	7.37E-21
^{137}Cs	2.72E+03	6.23E-15
^{137m}Ba	2.57E+03	9.44E-22
^{152}Eu	2.71E-01	2.76E-19
^{154}Eu	6.11E+01	3.97E-17
^{155}Eu	6.23E+00	2.22E-18
^{233}U	2.57E-03	3.09E-17
^{235}U	1.05E-03	5.59E-14
^{237}Np	5.34E-02	8.65E-15
^{238}Pu	7.18E-02	4.76E-19
^{239}Pu	3.86E-01	7.03E-16
^{240}Pu	9.85E-02	4.87E-17
^{241}Pu	5.90E+00	6.42E-18
^{241}Am	1.63E+01	5.34E-16
^{243}Cm	1.91E-01	4.13E-19
^{244}Cm	2.49E+00	3.41E-18
Total	2.68E+05	3.66E-09

Appendix C

HLW WESP Design Data

Appendix C
HLW WESP Design Data

Conditions in Equipment Rooms:	For Pressure Vessels	For Insulator Enclosures	For Power Supply and Control Equipment
Temperature:	max: 113°F, min: 59°F (radiant heat sources may raise temp to 150°F)	max: 95°F, min: 50°F	max: 95°F, min: 50°F
Pressure:	-1 to –1.4 in w.c.	-0.1 to –1 in w.c.	-0.1 to –1 in w.c.
Relative Humidity:	30% - 100%	30% - 60%	30% - 60%
Contamination Level:	(C5) surface contamination ≥100,000 dpm/100cm^2	(C5) surface contamination ≥100,000 dpm/100cm^2 (surrounding room is C2)	(C2) surface contamination <1,000 dpm/100cm^2
Radiation Level:	R5: high - greater than 100 mrem/hr.	R5: high – up to 100 mrem/hr (surrounding room is R3)	R2: 0.25 mrem/hr
Personnel Access:	no access allowed	decontaminated for access (protective clothing, gloves, respirator)	unrestricted area – normal work clothes
Electrical Hazard Class:	non hazardous	non hazardous	non hazardous

WESP Vessel Configuration

Offgas Nozzle Orient (In):	side mounted	Offgas Nozzle Orient (Out):	side mounted
Vessel Orientation:	vertical	Offgas Flow Path thru Vessel:	bottom to top

Inlet Process Conditions

Offgas Flow Rate:	Nominal:	1200 acfm	Design Range:	1000-2000 acfm
Offgas Temp:	Nominal:	121 °F +/- 15 °F	Design Range:	45-170 °F (minimal cycling)
Offgas Pressure:	Nominal:	-45 inches w.c. (inlet)	Design Range:	+1 atm to –1 atm
Offgas Humidity:	Nominal:	100 %	Design Range:	0 – 100% (with minor solution entrainment – see note 1)
Particulates:	Inlet Conc:	10 to 300 mg/m^3		
Size:	Range:	by mass - 50% smaller than 0.50 μm, 80% smaller than 1.0 μm, 90% smaller than 2.0 μm		

Performance Requirements

Solids Removal:	99% overall, 97.5% for ~0.35μm particles based on 2000 acfm
Equipment Service Life:	Pressure vessels and attached nozzles and structural components: 40 years.
	Pressure vessel internal precipitator components: 40 years, or longest possible life up to 40 yrs.
	Power supply and control equipment: minimum of 7 years. Consider ease of upgradeability.
	Instrumentation systems: design for 40 years. Consider ease of upgradeability in design.
	Power, control, communications cabling: design for 40 years. Consider ease of upgradeability.
Availability:	97% rolling average over each 7 year period between melter changeouts.
Planned Maintenance Freq:	Equipment in pressure vessel rooms: none.
	Equipment in insulator enclosure: none.
	Power supply and control equipment: regular scheduled maintenance will be performed.

Instrumentation equipment: inside the pressure vessel room – none, other instrumentation outside C5 areas will have regular scheduled maintenance.

Notes:

1. It is anticipated that offgas humidity will not fall below 75 percent, based on upstream scrubber operation.

Predicted HLW Offgas Analysis at Inlet – Bounding Conditions for All Feed Types

	% by Volume	g/m3	mol/l
Cations			
Al^{3+}	0.0%	1.54E-06	5.72E-11
Ag^{+}	0.0%	3.37E-07	3.13E-12
B^{3+}	0.0%	3.73E-06	3.45E-10
Ba^{2+}	0.0%	6.55E-06	4.77E-11
Bi^{3+}	0.0%	5.54E-05	2.65E-10
Ca^{2+}	0.0%	7.63E-07	1.90E-11
Cd^{2+}	0.0%	1.76E-03	1.57E-08
Cr^{3+}	0.0%	2.68E-04	5.16E-09
Cs^{+}	0.0%	2.51E-04	1.89E-09
Fe^{3+}	0.0%	1.10E-05	1.98E-10
H^{+}	0.0%	1.41E-06	1.40E-09
Hg^{2+}	0.0%	3.27E-02	1.63E-07
K^{+}	0.0%	4.27E-03	1.09E-07
La^{3+}	0.0%	8.57E-06	6.17E-11
Li^{+}	0.0%	2.25E-04	3.24E-08
Mg^{2+}	0.0%	4.55E-07	1.87E-11
Mn^{4+}	0.0%	1.43E-06	2.61E-11
Mo^{6+}	0.0%	8.24E-05	8.58E-10
Na^{+}	0.0%	2.98E-03	1.30E-07
Ni^{2+}	0.0%	1.85E-06	3.15E-11
Pb^{2+}	0.0%	2.94E-05	1.42E-10
Se^{4+}	0.0%	2.07E-03	2.62E-08
Si^{4+}	0.0%	8.17E-06	2.91E-10
Sr^{2+}	0.0%	6.89E-08	7.86E-13
Ti^{4+}	0.0%	2.28E-05	4.76E-10
U^{4+}	0.0%	2.43E-06	1.02E-11
Zn^{2+}	0.0%	4.23E-06	6.47E-11
Zr^{4+}	0.0%	3.17E-06	3.47E-11
Anions			
Cl^{-}	0.0%	1.01E-05	2.85E-10
$H_2BO_3^{-}$	0.0%	9.28E-11	1.52E-15
HBO_3^{2-}	0.0%	2.25E-19	3.76E-24
BO_3^{3-}	0.0%	4.85E-29	8.24E-34
F^{-}	0.0%	4.28E-05	2.25E-09

Anions Continued	% by Volume	g/m3	mol/l
I^-	0.0%	2.18E-11	1.72E-16
NO_3^-	0.0%	5.60E-07	9.04E-12
O^{2-}	0.0%	1.42E-03	8.88E-08
O_2^{2-}	0.0%	0.00E+00	0.00E+00
OH^-(aq)	0.0%	1.61E-15	9.49E-20
$HSiO_3^-$	0.0%	3.45E-11	4.48E-16
SiO_3^{2-}	0.0%	4.67E-19	6.14E-24
Organics			
none			
Water			
H_2O	22.1%	1.28E+02	7.09E-03
Aerosols	0.1%	4.21E-01	2.34E-05
	% by Volume	**g/m3**	**mol/l**
Gases			
Ar	0.7%	9.14E+00	2.29E-04
CO	0.0%	8.66E-02	3.09E-06
CO_2	0.8%	1.19E+01	2.70E-04
HCl	0.0%	7.39E-05	2.03E-09
HF	0.0%	1.19E-02	5.95E-07
I_2	0.0%	1.35E-05	5.32E-11
N_2	59.8%	5.37E+02	1.92E-02
NH_3	0.0%	1.45E-01	8.49E-06
NO	0.3%	3.35E+00	1.12E-04
NO_2	0.1%	7.71E-01	1.68E-05
NaCl(s)	0.0%	1.16E-03	1.99E-08
NaF(s)	0.0%	8.07E-03	1.92E-07
NaI(s)	0.0%	4.95E-09	3.30E-14
O_2	16.0%	1.64E+02	5.13E-03
P_2O_5(s)	0.0%	1.44E-05	1.01E-10
SO_2	0.0%	2.00E-02	3.12E-07
Total	100.0%	8.55E+02	3.21E-02

HLW Radionuclides – Maximum Dosages	Bq/m^3	mol/l
^{3}H	2.45E+05	2.28E-13
^{14}C	1.99E+04	8.58E-12
^{60}Co	4.21E+03	1.68E-15
^{90}Sr	3.12E+04	6.87E-14
^{90}Y	3.12E+04	1.73E-17
^{99}Tc	1.08E+07	1.74E-07
^{126}Sn	6.76E-01	5.11E-15
^{129}I	7.87E+02	1.01E-09
^{129}I(s)	2.44E-01	3.14E-13

Radionuclides Continued	Bq/m^3	mol/l
^{134}Cs	1.11E+00	1.73E-19
^{137}Cs	2.72E+07	6.24E-11
^{137m}Ba	2.58E+07	9.45E-18
^{152}Eu	2.18E+00	2.22E-18
^{154}Eu	2.30E+02	1.50E-16
^{155}Eu	1.31E+02	4.68E-17
^{233}U	4.04E-03	4.86E-17
^{235}U	1.13E-03	6.00E-14
^{237}Np	3.36E-01	5.43E-14
^{238}Pu	1.59E+00	1.05E-17
^{239}Pu	1.40E+01	2.55E-14
^{240}Pu	7.51E-01	3.71E-16
^{241}Pu	9.97E+01	1.09E-16
^{241}Am	4.08E+02	1.33E-14
^{243}Cm	6.07E-01	1.31E-18
^{244}Cm	1.30E+01	1.78E-17
Total	6.42E+07	1.75E-07

Appendix D

Engineering Information Data Sheet

Appendix D
Vendor Data Sheet

Vendor to Complete and Submit

Item		LAW/HLW	Item	LAW/HLW
Performance Data:				
Velocity Thru Inlet (fps)	Nom Flow:	/	Design Flow:	/
Velocity Thru Outlet (fps)	Nom Flow:	/	Design Flow:	/
Migration Velocity (fps)	Nom Flow:	/	Design Flow:	/
Residence Time (sec)	Nom Flow:	/	Design Flow:	/
dP through WESP (psi)	Nom Flow:	/	Design Flow:	/
Vessel and Insulator Housings				
Vessel Height (TL to TL) (ft):		/	Total Height:	/
Vessel Inside Diameter (in):		/	Vessel O.D. w/Connections (in):	/
Vessel Shell Plate Thickness (in):		/	Head Plate Thickness (in):	/
Bottom Head Configuration:		/	Top Head Configuration:	/
Insulator Housing Height (ft):		/	Insulator Housing ID (in):	/
Insulator Shell Plate Thickness (in):		/	Head Plate Thickness (in):	/
Collecting Electrodes				
Quantity:		/	Shape:	/
Effective Length (ft):		/	Actual Length (ft):	/
Inside Diameter (in):		/	Thickness (in):	/
Specific Collection Area (SCA) ft^2/1000 acfm gas		/	Collecting Surface (ft^2):	/
Total Area (ft^2) – total flat projected area for "A" in Deutch-Anderson equation:				/
Discharge Electrodes				
Quantity:		/	Type/Configuration:	/
Effective Length (ft):		/	Actual Length (ft):	/
Diameter (in):		/	Output Current Density:	/
Space between Electrodes, CL to CL (in):		/	Connection to Frame:	/
Power Supplies				
Type:		/	Supplier:	/
Insulating Oil Type:		/	Oil Quantity:	/
Power Input (guaranteed), kW:		/	Power Output, kW:	/
Output Waveform		/	Power Factor:	/
Voltage Input, V:		/	Current Input, A:	/
Voltage Output, V:		/	Current Output, A:	/
% Voltage Harmonics		/	% Current Harmonics:	/
Secondary Current Form Factor:		/	Nom Current Rating (mA):	/
Transformer Turns Ratio:		/		
Support Insulators				
Material:		/	Quantity:	/
Operating Temperature (F):		/	Diameter:	/
Purge Airflow (scfm):		/	Purge Air Duty:	/
Voltage Class:		/	Creep Distance:	/
Flush Water/ Mist Systems				
Flush Water Nozzle Quantity:		/	Flush Water Nozzle Size:	/
Estimated Flushing Frequency (times/month):		/	Flush Water Flow (gpm):	/
Misting Water Nozzle Quantity:		/	Misting Water Nozzle Size:	/
Misting Frequency		/	Misting Flow (gpm):	/
Weights				
Empty Vessel (w/internals, supports):		/	Internals Only:	/
Total Vessel Operating Weight:		/	Total Vessel Test Wt:	/
Control Panel (if separate from power sup):		/	Power Supply:	/

Appendix E

Figures

Appendix E
Figures

NOZZLE	SIZE	SERVICE/REMARKS
N01	10"	OFFGAS INLET
N02	10"	OFFGAS OUTLET
N03	3"	DRAIN
A	3"	LEVEL TRANSMITTER
B	1"	LEVEL TRANSMITTER
C	3"	LEVEL TRANSMITTER
D	1"	LEVEL TRANSMITTER
E	BY SELLER	FLUSH WATER NOZZLES-QTY & LOCATION BY SELLER
F	BY SELLER	MISTING SPRAY NOZZLES-QTY & LOCATION BY SELLER
N20	BY SELLER	MANWAY INSPECTION PORT-NOTE 3
G	2"	PURGE AIR TO INSULATOR ENCLOSURES (SEE NOTE 4)

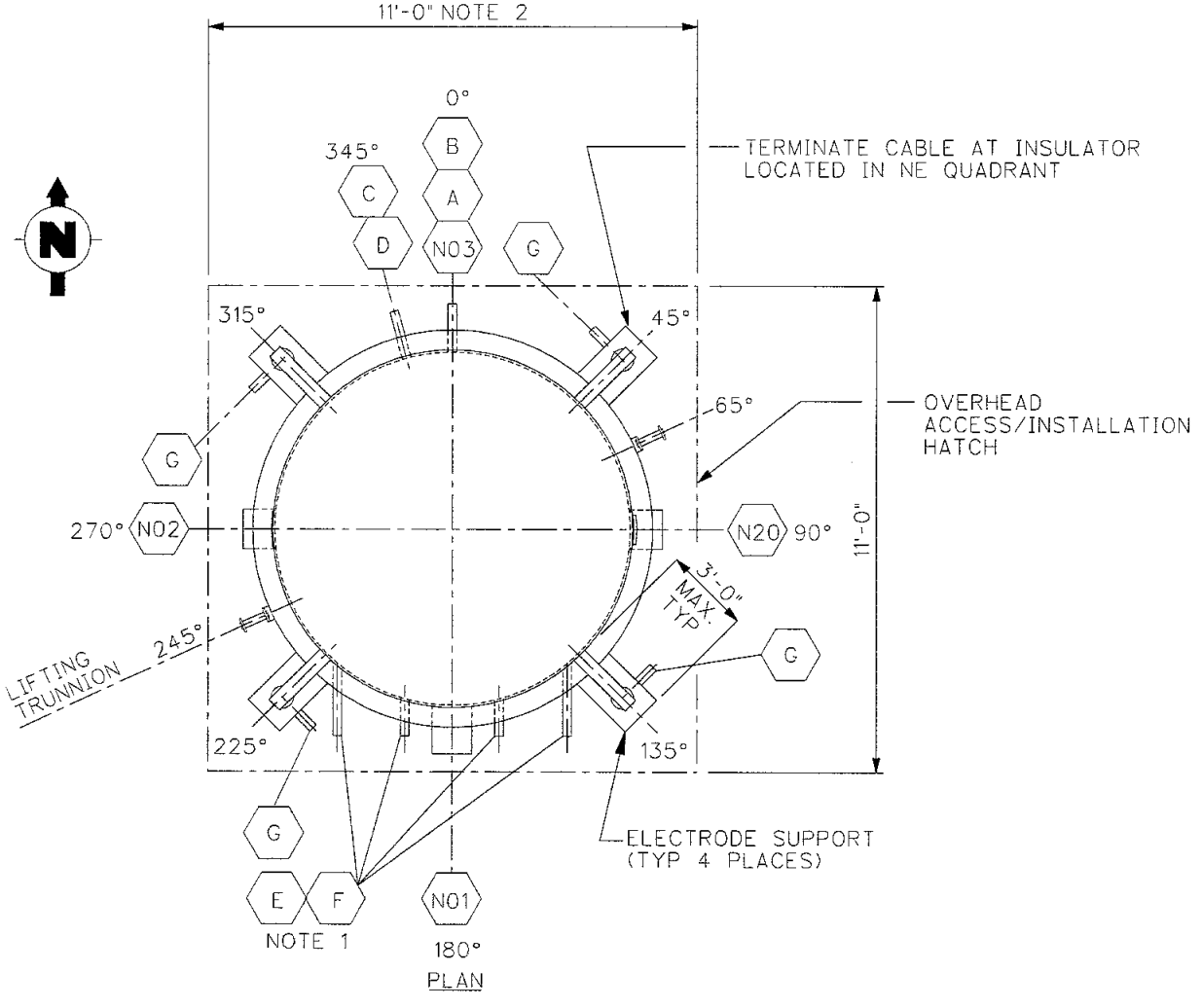

Figure 1- Conceptual Design for LAW WESP Vessel Plan and Nozzle Schedule
(Typical for all LAW WESPs)
Scale: Not to Scale

Notes for Figure 1:

1. Locate flush and misting nozzles as required between 135° and 225°. For same-service nozzles to be located on the same horizontal plane, configure to be easily connected to a common header.
2. Buyer will provide 11'-0" square opening centered over the vessel in the floor above for access/installation. Seller shall allow a minimum of 3" clearance on all sides. High voltage cable termination and termination housing is excluded from envelope limits.
3. Manway/inspection port, if required, shall be 24".
4. Coordinate final location of purge air nozzles with Buyer. Purge air connection may be located above or below insulator mounting flange depending on final insulator configuration and cable termination requirements. If cable termination housing requires purge air, the connection size shall be 1".

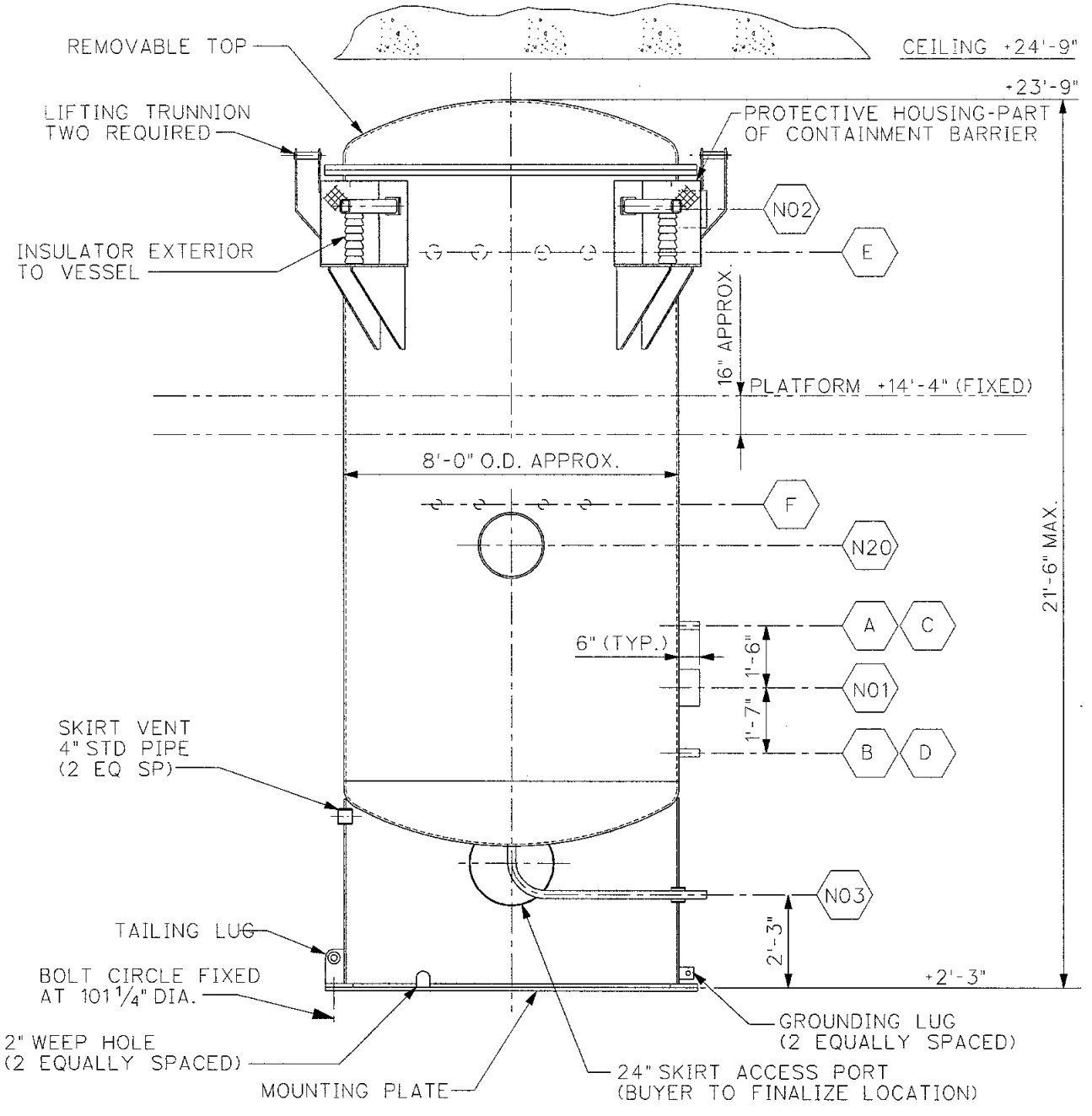

Figure 2 – Conceptual Design for LAW WESP Vessel, Elevation
(Typical for all LAW WESPs)
Scale: Not to Scale

Notes for Figure 2:

1. Application and orientation of misting spray nozzles (nozzles marked "F") are on hold pending Seller confirmation of requirement. Buyer intends to introduce misting in the offgas line upstream of the vessel.
2. Anchor bolt chairs shall be at 0°, 45, 90, 135, 180, 225, 270, and 315. Seller shall locate tailing lugs, weep holes, grounding lugs, etc., to miss the chairs.
3. Maximum envelope height excludes high voltage cable termination and termination housing, as well as electrical bus extensions (if required). Top of termination housing will not exceed elevation 25'-6".

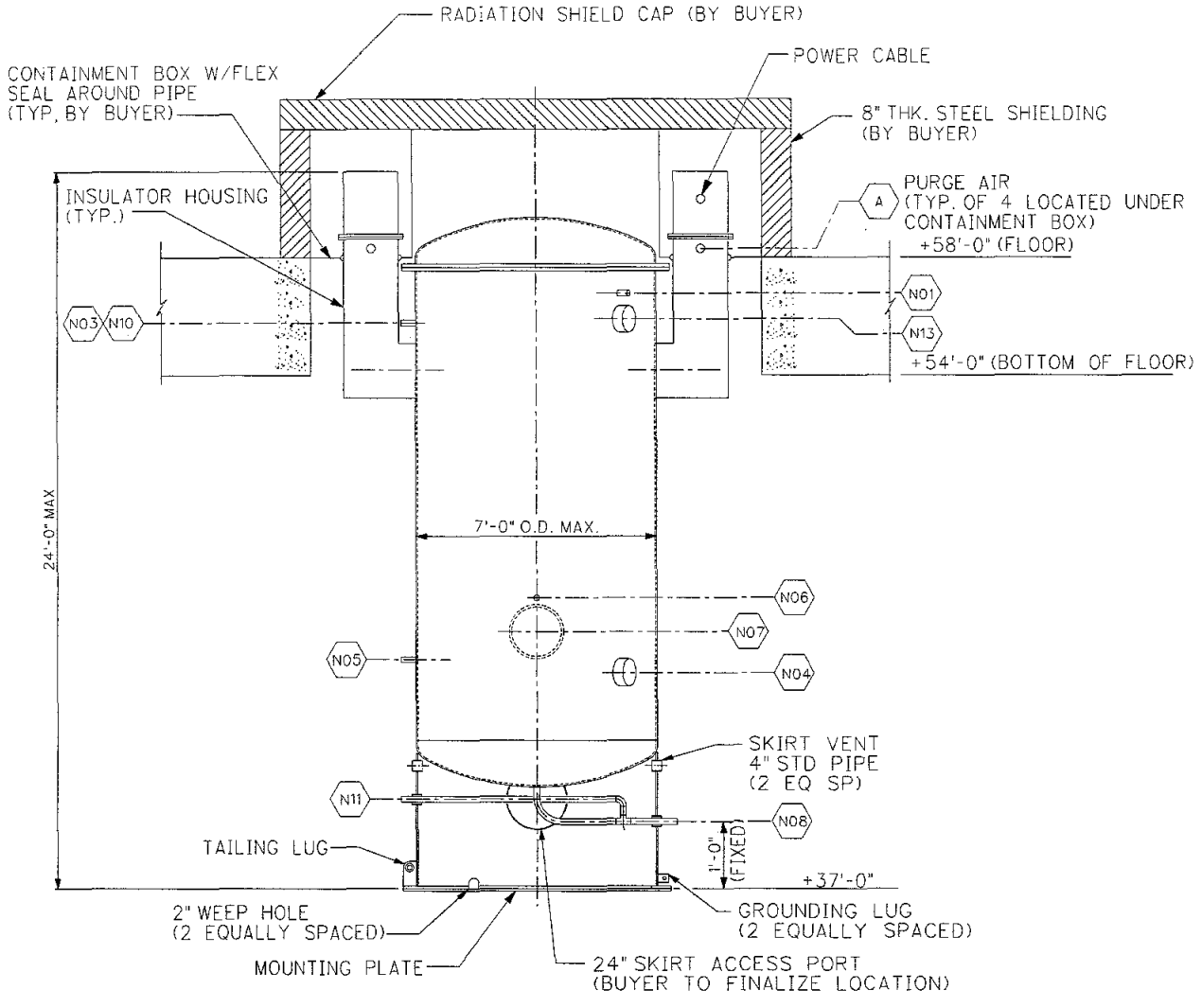

Figure 3 – Conceptual Design for HLW WESP Vessel, Elevation
(Typical for all HLW WESPs)
Scale: Not to Scale

Notes for Figure 3:

1. Coordinate with Buyer to retain access for electrode alignment, as required, prior to hot startup.
2. The radiation shield cap shown is depicted as being steel plate but it may be concrete instead. The cap may be installed immediately after final electrode alignment is complete.
3. Provide stainless steel shim packs as required.
4. Purge air connections to be located within the containment boxes surrounding the insulator housing caps. Purge air connection may be located above or below insulator mounting flange depending on final insulator configuration and cable termination requirements. Coordinate final location of purge air nozzles with Buyer. If cable termination housing requires purge air, the connection size shall be 1".

NOZZLE	SIZE	SERVICE/REMARKS
N01	2"	FLUSH WATER NOZZLE
N02	N/A	NOT USED
N03	1"	PRESSURE DIFFERENTIAL TRANSMITTER
N04	8"	OFFGAS INLET
N05	1"	PRESSURE DIFFERENTIAL TRANSMITTER
N06	2"	FLUSH WATER NOZZLE
N07	BY SELLER	MANWAY/ INSPECTION PORT
N08	6"	DRAIN
N09	N/A	NOT USED
N10	1"	LEVEL TRANSMITTER
N11	1"	LEVEL TRANSMITER
N13	10"	OFFGAS OUTLET
A	2"	PURGE AIR TO INSULATOR ENCLOSURES (SEE NOTE 6)

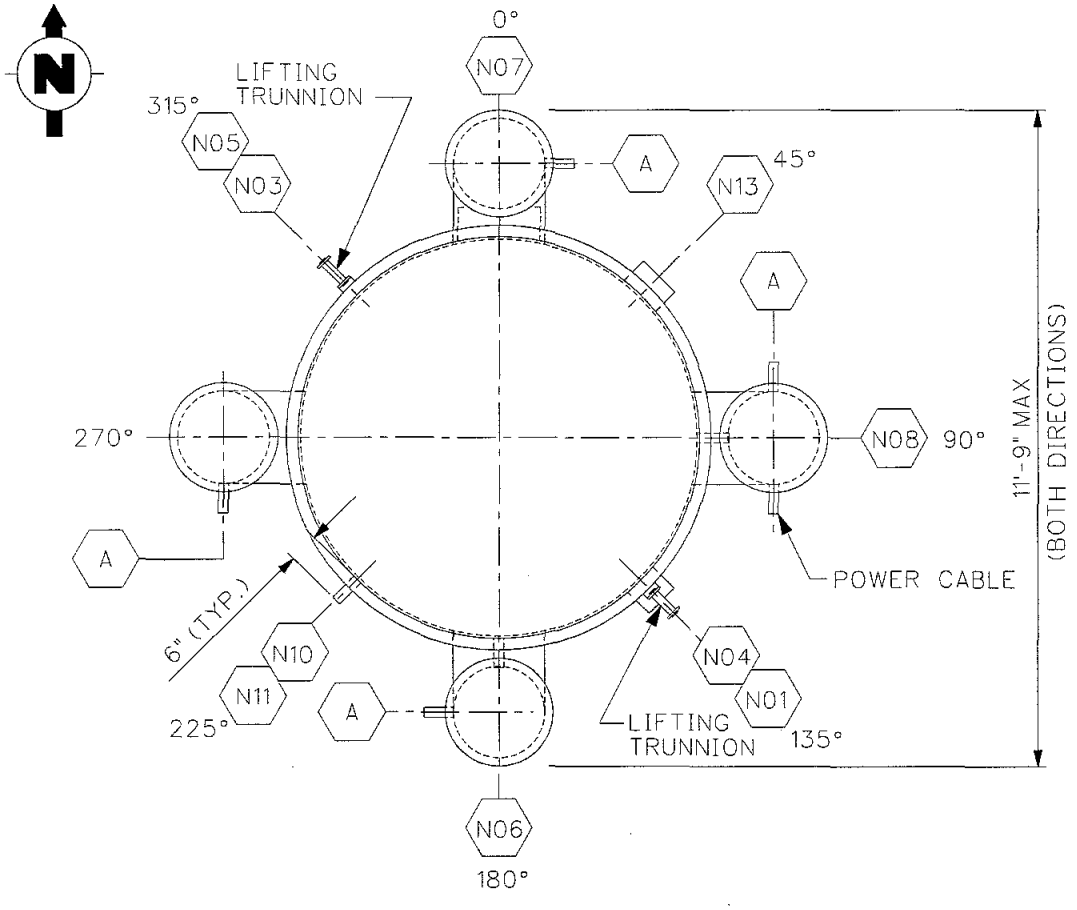

Figure 4 – Conceptual Design for HLW WESP Vessel, Nozzle Plan and Schedule
(Typical for all HLW WESPs)
Scale: Not to Scale

Notes for Figure 4:
1. Manway/inspection port, if required, shall be no larger than 24".
2. Buyer intends to introduce misting in the offgas line upstream of the vessel.
3. Terminate cable at insulator in southeast quadrant. Cable will be routed south.
4. Final location of lifting trunnions by Seller.
5. High voltage cable termination and termination housing is excluded from envelope limits.
6. If cable termination housing requires purge air, the connection size shall be 1".

R10406559

RIVER PROTECTION PROJECT – WASTE TREATMENT PLANT

ENGINEERING SPECIFICATION

FOR

HEPA Filters

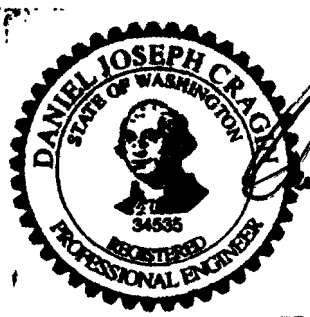

10-25-04

EXPIRES: 09-10-06

ISSUED BY
RPP-WTP PDC

This document contains 19 pages.

Content applicable to ALARA? ☒ **Yes** ☐ **No**

ADR No.	**Rev**
N/A	N/A

Quality Designator
QL
DOE Contract No. DE-AC27-01RV14136

NOTE: Contents of this document are Dangerous Waste Permit affecting.

REV	DATE	REASON FOR REVISION	BY	CHECK	REVIEW	QA	APEM/DEM
1	25-Oct-04	Issued for Permitting Use	P. Sullivan	G. Garcia	D. Cragin	N/A	G. Duncan
0	16-Mar-04	Issued for Permitting Use	P. Sullivan	G. Garcia	D. Cragin	NA	G. Garcia for G. Duncan

SPECIFICATION No.	**Rev**
24590-WTP-3PS-MKH0-TP002	1

Notice

Please note that source, special nuclear, and byproduct materials, as defined in the Atomic Energy Act of 1954 (AEA), are regulated at the US Department of Energy (DOE) facilities exclusively by DOE acting pursuant to its AEA authority. DOE asserts that, pursuant to the AEA, it has sole and exclusive responsibility and authority to regulate source, special nuclear, and byproduct materials at DOE-owned nuclear facilities. Information contained herein on radionuclides is provided for process description purposes only.

Contents

Notice ii

1 Scope 1

1.1 Project Description and Location 1

1.2 Equipment, Material, and Services Required 1

1.3 Work by Others 1

1.4 Definition 1

1.5 Abbreviations 2

1.6 Safety and Quality Classifications 2

2 Applicable Documents 3

2.1 ANSI/ASME – American National Standards Institute/American Society of Mechanical Engineers 3

2.2 Other Reference Documents and Drawings 3

2.3 Informational Reference Documents 3

3 Design Requirements 4

3.1 General 4

3.2 Performance 6

3.3 Design Conditions 6

4 Materials 6

4.1 Construction 6

4.2 Prohibited Materials 7

5 Fabrication 7

5.1 General 7

6 Tests and Inspections 8

6.1 General 8

6.2 Site Tests 8

7 Preparation for Shipment 8

7.1 General 8

7.2 Tagging 8

7.3 Packaging 9

7.4 Documentation 9

7.5 Shipping and Handling Instructions 9

8 Quality Assurance 10

8.1 Quality Assurance Requirements Specific to Item(s) or Service 10

8.2 Substitutions 10

9 Configuration Management 11
10 Documentation and Submittals 11
10.1 General 11
10.2 Submittals 11
10.3 Drawings 12
10.4 Procedures 12
10.5 Calculations 12
10.6 Manuals 12
10.7 Certificates of Conformance 13
10.8 Schedules 13
10.9 Materials Certificates/Statistics 13
10.10 Data 13

Tables

Table 1 Safe Change Radial Flow HEPA Filter Limiting Criteria 14
Table 2 Remote Change Radial Flow HEPA Filter Limiting Criteria 15

1 Scope

1.1 Project Description and Location

The River Protection Project-Waste Treatment Plant (RPP-WTP) is a complex of waste treatment facilities where the Department of Energy's (DOE) Hanford site tank waste will be put into stable glass form. The WTP Contractor will design, build, and start up the WTP pretreatment and vitrification facilities for the Office of River Protection (ORP). The waste treatment facilities will pretreat and immobilize the low-activity waste (LAW) and high-level waste (HLW) currently stored in underground storage tanks at the Hanford Site.

The Hanford Site occupies an area of about 560 square miles and is located along the Columbia River, north of the city of Richland, Washington. The WTP Facility will be constructed at the East End of the 200 East Area of the Hanford Site. Benton, Franklin, and Grant counties surround the Hanford Site.

1.2 Equipment, Material, and Services Required

The Supplier shall furnish, test, and deliver Radial Flow HEPA Filters with a maximum rating of 2,000 SCFM (950 liters per second) per filter in accordance with this specification. The Supplier shall perform qualification testing of the Radial Flow HEPA Filters in accordance with the requirements of ASME AG-1, Section FC-5100 and this specification. AG-1 required qualification testing shall be performed and certified by an independent test facility. Production of the Radial Flow HEPA Filters shall not commence until the qualification tests are successfully completed and the results are accepted by the Buyer.

All HEPA filters provided under this Specification are expected to meet RPP-WTP Project requirements for Important-to-Safety (ITS) Safety Class (SC), Quality Level 1, and Seismic Category I service.

1.3 Work by Others

1.3.1 Material unloading and storage at job site

1.3.2 Installation labor

1.4 Definition

1.4.1 Challenge Aerosol. Poly-disperse droplets used as challenge aerosol for testing installed HEPA filters for leaks. The poly-disperse aerosol used for leak testing of systems differs in size from the 0.3 micrometer mono-disperse DOP aerosol used for efficiency testing of individual HEPA filters by manufacturers.

1.4.2 Grab Ring. Ring provided at the inlet of a Remote Change HEPA Filter to facilitate insertion and removal operations by remote systems.

1.4.3 HEPA Filter. High Efficiency Particulate Air Filter. A throwaway, extended-media dry type filter with a rigid casing. The filter shall exhibit a particle removal efficiency of 99.97% when tested with essentially mono-dispersed 0.3 micrometer diameter test aerosol particles.

1.4.4 Production Test. A test made on an individual production item to verify its performance in accordance with specified requirements.

1.4.5 Qualification Tests. Test performed on HEPA filters, prior to production, by an independent test facility in accordance with the requirements of ASME AG-1, Section FC-5100.

1.4.6 Remote Change. Remote change implies that the Remote Change HEPA filter requires an integral grab ring that works in conjunction with a mechanical filter handling tool as required for remote installation and removal.

1.4.7 Safe Change. Safe change implies that the Safe Change HEPA filter can be manually installed and removed by an operator without remote equipment and without breaking confinement.

1.4.8 Water Column (WC). The units for air pressure typically expressed in inches of water column height (e.g., 2.5-inches WC).

1.5 Abbreviations

1.5.1 ANSI. American National Standards Institute

1.5.2 ASHRAE. American Society of Heating, Refrigerating and Air-Conditioning Engineers

1.5.3 ASME. American Society of Mechanical Engineers

1.5.4 ASTM. American Society for Testing and Materials

1.5.5 CAS. Chemical Abstract Service

1.5.6 SCFM. Standard Cubic Feet per Minute

1.5.7 DOE. Department of Energy

1.5.8 HEPA. High Efficiency Particulate Air

1.5.9 RPP-WTP. River Protection Project - Waste Treatment Plant

1.5.10 SDDR. Supplier Deviation Disposition Request

1.5.11 UL. Underwriters Laboratories, Inc.

1.5.12 WC. Water Column

1.6 Safety and Quality Classifications

All HEPA filters provided under this Specification are expected to meet RPP-WTP Project requirements for Important-to-Safety (ITS) Safety Class (SC), Quality Level 1, and Seismic Category I service.

2 Applicable Documents

The following documents form a part of this specification to the extent specified herein. In the event of conflict between the document referenced herein and the contents of this specification, the Buyer shall be notified of the conflict.

2.1 ANSI/ASME – American National Standards Institute/American Society of Mechanical Engineers

2.1.1 ASME AG-1-1997 with ASME AG-1a-2000 Addenda, Code on Nuclear Air and Gas Treatment (Hereinafter referred to as ASME AG-1 or AG-1).

2.1.2 ASME N509-1989, Reaffirmed 1996, Nuclear Power Plant Air Cleaning Units and Components.

2.1.3 ASME N510-1989, Reaffirmed 1995, Testing of Nuclear Air Treatment Systems.

2.1.4 ASME NQA-1-89, Quality Assurance Program Requirements for Nuclear Facilities.

2.1.5 UL-586-1990, Underwriters Laboratories Inc., Test Performance of High Efficiency Particulate, Air Filter Units.

2.1.6 NFPA 801-2003, Standard for Fire Protection for Facilities Handling Radioactive Materials

2.2 Other Reference Documents and Drawings

2.2.1 24590-WTP-3PS-MKH0-T0001, Engineering Specification for HVAC Safe Change HEPA Filter Housings.

2.2.2 24590-WTP-3PS-MKH0-T0003, Engineering Specification for HVAC Remote Change HEPA Filter Housings.

2.2.3 24590-WTP-3PS-G000-T0001, Supplier Quality Assurance Program Requirements.

2.2.4 24590-WTP-3PS-G000-T0003, Engineering Specification for Packaging, Handling and Storage Requirements.

2.3 Informational Reference Documents

The following codes and standards are not specifically invoked on the RPP-WTP Project, but were used to the extent referenced herein and/or by ASME AG-1 as a source of information in development of technical and performance requirements.

2.3.1. ASME NQA-2-89, Part 2.2, Quality Assurance Requirements for Packaging, Shipping, Receiving, Storage and Handling of Items for Nuclear Power Plants.

2.3.2. DOE-HDBK-1169-2003, DOE Nuclear Air Cleaning Handbook

3 Design Requirements

3.1 General

3.1.1 This specification relates to Safe Change and Remote Change Radial Flow HEPA Filters with a maximum rating of 2,000 SCFM (950 liters per second) per filter and suitable for manual and remote change housing installations. Design of Radial Flow HEPA Filters shall conform to applicable sections of the documents listed in Section 2 of this specification.

3.1.2 Radial Flow HEPA Filters suitable for manual installation and removal shall be referred to hereinafter as Safe Change Radial Flow HEPA Filters. Safe Change Radial Flow HEPA Filters shall include a gelatinous seal and be suitable for horizontal installation in multi-filter cabinet style housings specified in 24590-WTP-3PS-MKH0-T0001, Engineering Specification for HVAC Safe Change HEPA Filter Housings.

3.1.3 For design development purposes only, limiting criteria for Safe Change Radial Flow HEPA Filters are shown in Table 1. These criteria may be superseded by Supplier design drawings submitted for Buyer review and permission to proceed. The Supplier design drawings will be used to document the final design.

3.1.4 Radial Flow HEPA Filters suitable for remote installation and removal shall be referred to hereinafter as Remote Change Radial Flow HEPA Filters. Remote Change Radial Flow HEPA Filters shall include a gelatinous seal and be suitable for vertical installation in remotely operated multi-filter cabinet style housings specified in 24590-WTP-3PS-MKH0-T0003, Engineering Specification for HVAC Remote Change HEPA Filter Housings.

3.1.5 For design development purposes only, limiting criteria for Remote Change Radial Flow HEPA Filters are shown in Table 2. These criteria may be superseded by Supplier design drawings submitted for Buyer review and permission to proceed. The Supplier design drawings will be used to document the final design.

3.1.6 Design of the Safe Change and Remote Change Radial Flow HEPA Filters shall conform to applicable portions of ASME AG-1, Section FC and applicable portions of the documents listed in Section 2 of this specification. The Buyer recognizes that ASME AG-1, Section FC, provides requirements for the design, construction, performance, fabrication, inspection, and acceptance testing for axial flow HEPA filters. Where conflicts between the Supplier's design and ASME AG-1, Section FC, exist due to configuration differences, the Supplier shall identify the respective code articles that do not apply and notify the Buyer prior to initiation of filter design qualification testing. With regard to the articles of ASME AG-1, Section FC, that do not apply to radial flow HEPA filters, the Supplier shall identify how the Supplier plans to meet the functional and performance requirements of these respective articles.

3.1.7 Filter media shall comply with ASME AG-1, Section FC, Appendix FC-I.

3.1.8 The filter pack shall be sealed at each end into two circular end caps and protected by inner and outer grilles or faceguards. The filter pack shall comply with ASME AG-1, FC-4111.

3.1.9 The filter pack shall be constructed in a cylindrical fashion, sealed with an end cap on one end and a flange at the other end. Radial flow shall be from inside to out, with unfiltered air

entering through the annulus of the flanged end, and exiting in a radial direction through the outside grille. Installation and removal of the safe change filter shall be based on bag-in bag-out procedure.

3.1.10 The Safe Change Radial Flow HEPA Filters shall utilize a gel filled channel located on the inner diameter of the filter inlet. The channel shall be manufactured from ASME AG-1 compatible materials and either fully integrated into the filter inlet flange (preferred) or affixed in position using a continuous seal weld. The construction method shall ensure that the gel channel remains in place and does not contribute to filter bypass during operation or fail structurally during filter installation and removal.

3.1.11 The Remote Change Radial Flow HEPA Filters shall utilize a gel filled channel located on the outer diameter of the filter inlet. The channel shall be manufactured from ASME AG-1 compatible materials and either fully integrated into the filter inlet flange (preferred) or affixed in position using a continuous seal weld. The construction method shall ensure that the gel channel remains in place and does not contribute to filter bypass during operation or fail structurally during filter installation and removal.

3.1.12 Filter seals shall perform the following functions:

3.1.12.1 Provide a leak tight seal between the filter and the mating surface in the housing.

3.1.12.2 Accommodate maximum fabrication tolerances of the housings mating knife-edge without compromising seal integrity.

3.1.12.3 The gel seal material shall remain in the gel seal channel during installation and removal cycles that would be normally expected to occur during operation of the system, as well as during design basis seismic events.

3.1.13 Handles on Safe Change Radial Flow HEPA Filters used for installation and removal shall:

3.1.13.1 Facilitate manual handling without damage to the filter.

3.1.13.2 Be attached to withstand installation and removal loads.

3.1.13.3 Not increase overall filter dimensions when not in use, unless approved by the Buyer.

3.1.14 Grab Rings on Remote Change Radial Flow HEPA Filters used for installation and removal shall:

3.1.14.1 Facilitate remote mechanical handling without damage to the filter.

3.1.14.2 Be attached to withstand installation and removal loads.

3.1.14.3 Be compatible with remotely operated mechanical systems (provided by others) to facilitate insertion and removal operations by remote systems.

3.2 Performance

The performance of Safe Change and Remote Change Radial Flow HEPA Filters shall conform to applicable portions of ASME AG-1, Section FC, and applicable portions of the documents listed in Section 2 of this specification, including, but not limited to the following requirements:

3.2.1 Filter Media Efficiency: ASME AG-1, FC-1130: 99.97% when tested with an aerosol of essentially 0.3 micron diameter test aerosol particles.

3.2.2 Seismic: ASME AG-1, FC-4310.

3.2.3 Qualification Testing: ASME AG-1, FC-5100: Testing prior to acceptance and production, and certified by an independent test facility.

3.2.4 Resistance to Airflow: The following criteria are provided to clarify ASME AG-1 Article FC-5110: The clean filter resistance to airflow shall be a maximum of 1.3 in-WC at 2,000 scfm when tested in accordance with paragraph FC-5120.

3.2.5 Test Aerosol Penetration: ASME AG-1, FC-5120, 0.03% at rated (i.e., maximum) flow rate and 20% of rated flow rate, where rated flow rate is 2,000 scfm.

3.2.6 Resistance to Rough Handling: ASME AG-1, FC-5130.

3.2.7 Resistance to Pressure: ASME AG-1, FC-5140.

3.2.8 Resistance to Heated Air: ASME AG-1, FC-5150.

3.2.9 Spot Flame Resistance: ASME AG-1, FC-5160.

3.3 Design Conditions

3.3.1 Safe Change and Remote Change Radial Flow HEPA Filters will be stored in a controlled environment consistent with Level B as identified in ASME AG-1 Article FC-7000 and described in References 2.3.1 and 2.3.2 Appendix A.4.

3.3.2 HEPA filters are not to be used for installations where there is a possibility of condensation forming on them.

4 Materials

4.1 Construction

4.1.1 Materials of construction for the Safe Change and Remote Change Radial Flow HEPA Filters shall conform to ASME AG-1, Section FC, Article 3000, and applicable portions of the documents listed in Section 2 of this specification.

4.1.1.1 Type 1: ASME AG-1, FC-1121 Type C media pack with urethane adhesive. Reference the Material Requisition 24590-QL-MRA-MKH0-00003 for quantity required. This filter type

shall be developed and qualification tested for each type of housing (remote and safe change).

4.1.1.2 Type 2: ASME AG-1, FC-1121 Type C media pack with silicone adhesive. Reference the Material Requisition 24590-QL-MRA-MKH0-00003 for quantity required. This filter type shall be developed and qualification tested for each type of housing (remote and safe change).

4.1.1.3 Case Material Thickness and Material Type: ASME AG-1, FC-3110: Type II (i.e., ASTM A240 Type 304 or 304L is preferred, however, alternate materials subject to Article FC-3210 requirements and Buyer review may be proposed for use).

4.1.1.4 Faceguards: ASTM F 1267 Type II Class 3 Expanded Stainless Steel fabricated from Type 304L stainless steel sheets as specified in ASTM A666.

4.1.1.5 Gasket Material: ASME AG-1, FC-3120.

4.1.1.6 Media: ASME AG-1, FC-3130 with nitric and hydrofluoric acid resistant media formulation (e.g., DN003)

4.1.1.7 Adhesive: ASME AG-1, FC-3150.

4.1.2 Limiting criteria for Safe Change and Remote Change Radial Flow HEPA Filters are shown in Table 1 and Table 2. These criteria may be superceded by Supplier design drawing submittals that have been submitted for Buyer review and permission to proceed. The Supplier design drawings will be used to document the final design.

4.2 Prohibited Materials

4.2.1 For materials in contact with stainless steel, the following shall apply: Low melting point metals (i.e., lead, zinc, tin, antimony, cadmium, mercury) shall not exceed 1% by weight, with mercury not exceeding 50 ppm. Halides shall not exceed 200 ppm. This prohibition applies to use of tools, fixtures, paints, coatings and sealing compounds, and any other equipment or materials used by the Supplier during handling, assembly and storage of stainless steel parts or components.

4.2.2 Asbestos shall not be included in any component of the Safe Change and Remote Change Radial Flow HEPA Filter.

5 Fabrication

5.1 General

5.1.1 Fabrication of the Safe Change and Remote Change Radial Flow HEPA Filters shall be as specified in ASME AG-1, Article FC-6000. In instances where FC-6000 Subarticles do not apply as a result of implementing the radial flow design, fabrication shall be as specified by the Supplier design drawings.

6 Tests and Inspections

6.1 General

6.1.1 The test and inspection of Safe Change and Remote Change Radial Flow HEPA Filters shall conform to ASME AG-1, Article FC-5000.

6.1.2 Safe Change and Remote Change Radial Flow HEPA Filters shall require qualification testing prior to acceptance and production. Filter testing shall be performed and certified by an independent test facility as specified by ASME AG-1, Article FC-5100.

6.1.3 Each Safe Change and Remote Change Radial Flow HEPA Filter shall bear the UL-586 label indicating successful testing of these filter types in conformance with UL procedures as required by ASME AG-1.

6.1.4 Each Safe Change and Remote Change Radial Flow HEPA Filter manufactured for delivery shall be production tested in accordance with ASME AG-1, Section FC-5200, and the results of the test shall be marked on the label of each filter.

6.1.5 The Supplier shall provide objective evidence acceptable to the Buyer that the requirements of ASME AG-1 Articles I-3000 and I-5000 have been satisfied. Reference AG-1 Mandatory Appendix FC-I-4120.

6.2 Site Tests

Buyer's startup personnel will perform in-place tests after initial installation. Supplier shall provide startup assistance at Buyer's request.

7 Preparation for Shipment

7.1 General

7.1.1 Safe Change and Remote Change Radial Flow HEPA Filters shall be packaged, shipped, handled and stored in accordance with ASME AG-1, Article AA-7000, Article FC-7000, and in accordance with requirements of Reference 2.2.4.

7.2 Tagging

7.2.1 Each Safe Change and Remote Change Radial Flow HEPA Filter and Filter Package (carton containing one filter) shall be identified in accordance with nameplate requirements of ASME AG-1, Section FC-9000. The marking and labeling requirements of Reference 2.2.4 are also applicable.

7.2.2 Filter nameplates shall be affixed to the filter end cap in the most readily visible location.

7.2.3 In addition to the requirements stated above, Filter Package Marking shall include the following information:

7.2.3.1 Marking or label indicating the need for special storage environment (i.e. "Special Storage Requirements: NQA-2 Level B Storage or equivalent is required.").

7.2.3.2 Project number

7.2.3.3 RPP-WTP Purchase Order/Contract number

7.3 Packaging

7.3.1 Packaging shall be in accordance with ASME AG-1, Section FC-7000. The packaging requirements of Reference 2.2.4 are also applicable.

7.4 Documentation

7.4.1 Reference Section 10 of this Specification. Shipping documentation shall accurately reflect specific traceability to the items being shipped.

7.5 Shipping and Handling Instructions

7.5.1 Shipping and Handling of items shall be in accordance with ASME AG-1, Section FC-7000. The Shipment and Handling requirements of Reference 2.2.4 are also applicable.

7.5.2 Filters shall not be shipped by rail unless prior approval is obtained from the Buyer. (Reference 2.3.2 Appendix A.)

7.5.3 The following information, taken from the content of Appendix A of Reference 2.3.2, is provided for those arranging shipment of HEPA filters. It should be considered as guidance information only.

HEPA Filters should be shipped under controlled conditions insofar as practicable. Handling at interchange stations should be controlled to prevent temporary storage in conditions that would subject the filters to dampness, excessive heat or cold or rapidly changing temperatures. Proper attention to orientation of the cartons should be maintained consistent with the filter package instruction. Another control is to require that the filters be packed properly in a scaled truck-trailer body or in a sealed containerized-freight unit, not to be opened until arrival at the specified delivery point. Unloading should be performed by personnel who have been thoroughly instructed in the proper care and handling of HEPA filters. Mixed-load shipments should be avoided.

7.5.4 The following information, taken from the content of Appendix A of Reference 2.3.2, is provided for those receiving and unloading HEPA filters. It should be considered as guidance information only.

As the shipment is being unloaded, each carton should be inspected for external damage and improper positioning in the cargo space (i.e., the carton placed with arrow direction

horizontally). Damaged cartons, including those with corners dented and those improperly oriented in the truck, should be set aside for particularly careful inspection of their contents. Damage will be more prevalent when filter units are loaded with mixed cargoes or are shipped in a partially loaded carrier. The filter unit must be removed carefully from its carton. The acceptable method for removal is to open the top flaps of the container after removing the sealing tape. With flaps folded back, the carton should be inverted or upended gently to place the exposed end of the filter unit on a flat surface, preferably the floor. The surface must be clear of protrusions. Withdraw the carton from the filter unit. Attempts to remove the filter unit from the carton by grasping below the exposed filter case can result in irreparable damage if fingers puncture the delicate filter materials.

If conflicting handling instructions are provided by the filter manufacturer, the manufacturer's instructions shall prevail.

7.5.5 Safe Change and Remote Change Radial Flow HEPA Filters shall be stored in a controlled environment consistent with Level B as identified in ASME AG-1 Article FC-7000 and described in References 2.3.1 and 2.3.2 Appendix A.4.

8 Quality Assurance

8.1 Quality Assurance Requirements Specific to Item(s) or Service

8.1.1 The supplier shall have in place a Quality Assurance program meeting the requirements of ASME NQA-1-1989 marked as applicable in the Supplier Quality Assurance Program Requirements Data Sheet attached to the Material Requisition. The Supplier shall submit his Quality Assurance Manual with the Supplier's bid documentation.

8.1.2 The successful bidder must pass a pre-award survey by the Buyer. Supplier shall demonstrate that their quality program is in compliance with the procurement quality requirements listed in the Supplier Quality Assurance Program Requirements Data Sheet. The Supplier's Quality Assurance Program, reviewed and accepted by the Buyer, shall apply to every sub-tier supplier to the Supplier. The Supplier shall allow Bechtel, its agent, and DOE access to their or any sub-tier supplier's, facility, and records pertaining to the purchase order for the purpose of Quality Assurance Audits and Surveillance at mutually agreed times.

8.1.3 All items shall be manufactured in accordance with the Supplier's Quality Assurance program that meets the requirements of ASME NQA-1-1989, and has been previously evaluated and accepted by the Buyer's Quality Assurance Organization.

8.1.4 Supplier shall submit their Quality Assurance program and work plan to Buyer for approval and permission to proceed prior to commencement of work. The work plan shall include documents and procedures to implement the work and include a matrix of essential Quality Assurance elements cross referenced with the documents/procedures.

8.2 Substitutions

8.2.1 Supplier shall be required to identify and promptly document all deviations from the requirements of the procuring documents. In addition, the Supplier shall be required to

describe the recommended disposition based on appropriate analysis. Submittals of request for deviations from lower-tier suppliers shall be through the prime supplier to the Buyer.

8.2.2 Supplier-proposed deviations from procurement documents shall be initiated by use of the Supplier Deviation Disposition Request (SDDR) form attached to the Material Requisition.

9 Configuration Management

Each Safe Change and Remote Change Radial Flow HEPA Filter shall be tagged in accordance with Section 7.2 of this specification.

10 Documentation and Submittals

10.1 General

Supplier shall submit to Buyer Engineering and Quality Verification documents in the forms and quantities shown in Form G-321-E, Engineering Document Requirements, and Form G-321-V, Quality Verification Document Requirements, attached to the Material Requisition.

10.2 Submittals

Submittals for Safe Change and Remote Change Radial Flow HEPA Filters shall include:

10.2.1 Product catalog data sheets with product description, service application, and limitations for all components of the Safe Change and Remote Change Radial Flow HEPA Filter.

10.2.2 Materials of construction for all components.

10.2.3 Pressure drop performance curves indicating PRESSURE DROP (Inches WC) versus FLOWRATE (SCFM).

10.2.4 HEPA filter maximum allowable pressure drop.

10.2.5 Recommended HEPA filter maximum shelf life and basis for this information.

10.2.6 Gasket material radiation tolerance.

10.2.7 Weight.

10.2.8 Filter dimensions.

10.2.9 Material Safety Data Sheets.

10.2.10 Bill of materials. Reference AG-1 Article FC-8200(b).

10.2.11 Design Qualification Test Report prepared to support qualification of filter designs in accordance with AG-1 Article FC-5100. Reference AG-1 Article FC-8200(c) and (h).

10.2.12 The Supplier shall provide objective evidence acceptable to the Buyer that the requirements of ASME AG-1 Articles I-3000 and I-5000 have been satisfied. Reference AG-1 Mandatory Appendix FC-I-4120. Reference AG-1 Article FC-8200(b).

10.2.13 Copies of the AG-1 FC-5200 Production Test results. Reference FC-8200(d) and (f).

10.2.14 Filter Inspection Record and Packaging Certificate to satisfy AG-1 Articles FC-6300 and FC-8200(g).

10.3 Drawings

10.3.1 All drawings shall be submitted as CAD drawings in MicroStation, or MicroStation convertible format.

10.3.2 Drawings showing the following information shall be submitted to Buyer for review prior to fabrication:

10.3.3 The outline dimensions of the Safe Change and Remote Change Radial Flow HEPA Filter, including outline and detail drawings for each component.

10.3.4 Details of construction and fabrication drawings including fabrication tolerances.

10.3.5 The weight of individual components.

10.3.6 The ASTM or equivalent designation for materials.

10.4 Procedures

Procedures to be submitted shall include:

10.4.1 Test procedures to support FC-5100 Qualification and FC-5200 Production Testing.

10.4.2 Supplier's filter inspection, packaging, and shipping preparation procedure(s) as required to meet the intent of AG-1 Articles FC-6300 and FC-7000.

10.4.3 Supplier recommendations (e.g., procedure) for receiving inspection and storage.

10.5 Calculations

Calculations to be submitted shall include:

10.5.1 Submit applicable engineering data/calculations/performance charts that demonstrate compliance with this Specification.

10.6 Manuals

Manuals and instructions to be submitted shall include:

10.6.1 Quality Assurance Manual.

10.7 Certificates of Conformance

10.7.1 The Supplier shall provide Certificates of Conformance complying with ASME AG-1 FC-8200. The following clarifications apply:

10.7.1.1 In regard to Article FC-8200 (a) and (b), where conflicts between the Supplier's design and ASME AG-1 Sections FC-4000 and FC-3000 exist, the Supplier shall identify the respective code articles that do not apply and notify the Buyer.

10.7.1.2 Copies of all filter case material certifications shall be provided.

10.7.2 Furnish UL-586 certificate to meet evidence requirement of Article FC-5160.

10.8 Schedules

Lists and schedules shall include schedule of engineering, material purchase, and fabrication. Lists and schedules shall be submitted to the Buyer's Expediter.

10.9 Materials Certificates/Statistics

Reference Section 10.7 of this Specification.

10.10 Data

10.10.1 The Supplier shall provide Safe Change and Remote Change Radial Flow HEPA Filter performance data sheets and/or design drawings that include the following data.

10.10.1.1 Name of manufacturer, make, model number

10.10.1.2 Media area

10.10.1.3 Number of pleats, pleat depth, pleat length

10.10.1.4 Capacity, initial resistance, temperature rating

10.10.1.5 Dimensions with fabrication tolerances

10.10.1.6 Seal diameter

10.10.1.7 Weight

10.10.1.8 Materials of construction

10.10.1.9 Sealant type

10.10.1.10 Gasket materials

Table 1 Safe Change Radial Flow HEPA Filter Limiting Criteria

There are currently no RPP-WTP Project specific limiting criteria assigned to the fabrication dimensions and tolerances of the safe change radial HEPA filter.

Table 2 Remote Change Radial Flow HEPA Filter Limiting Criteria

Criteria	Basis Statement
The outer diameter (OD) of the filter, inclusive of all design features (e.g. seal channel) and fabrication tolerances shall not exceed 21 inches.	Export of waste filter from facility C5 cave requires use of remote equipment, export basket, and 55 gallon waste container. This process limits the dimensions of the waste item (i.e. filter).
The length of the filter, inclusive of all design features and fabrication tolerances shall not exceed 26-1/2 inches.	The current design of the export basket limits the filter size which may be inserted into the basket. The basket is inserted into a 55 gallon waste container.

ISSUED BY
RPP-WTP PDC
JS 10/16/02
INIT DATE

RIVER PROTECTION PROJECT – WASTE TREATMENT PLANT

ENGINEERING SPECIFICATION

FOR

Centrifugal Pumps to Meet Requirements of API Standard 610, Eighth Edition, and for Quality Levels QL-1 and QL-2

DOE Contract No.
DE-AC27-01RV14136

MARK W. HOFFMANN
STATE OF WASHINGTON
0030952
REGISTERED
PROFESSIONAL ENGINEER
10/9/02

EXPIRES 12/10/02

This bound document contains a total of 15 pages.

0	10/4/02	Issued for Permitting Use	Jessica Jackson	W Hoffmann	SMC
REV	DATE	REASON FOR REVISION	PREPARER	CHECKER	APPROVER

SPECIFICATION No. Rev
24590-WTP-3PS-MPC0-TP001 0

10/11/02 Processed Data Entry ☑ Copied QA ☐ Scanned ☐ Filed

Contents

1 Scope 1
1.1 Project Description and Location 1
1.2 Equipment, Material, and Services Required 1
1.3 Work by Others 2
1.4 Definitions and Acronyms 2
1.5 Quality/Seismic Classifications 4
2 Applicable Documents 4
2.1 General 4
2.2 Codes and Industry Standards 4
2.3 Engineering Standards 5
3 Design Requirements 5
3.1 Basic Function 5
3.2 Performance 6
3.3 Design Conditions 6
3.4 Environmental Conditions 8
3.5 Mechanical Requirements 8
3.6 Loading 8
3.7 Electrical Requirements 8
3.8 Instrumentation and Control Requirements 9
3.9 Remote Handling Requirements 9
4 Materials 9
4.1 Construction 9
4.2 Prohibited Materials 9
4.3 Special Requirements 9
4.4 Storage of Special Materials prior to work 9
5 Fabrication 9
5.1 Welding 9
5.2 Assembly 10
5.3 Heat Treatment 10
5.4 Other Processes (as required) 10
6 Tests and Inspections 10
6.1 Personnel Qualifications 10
6.2 Non-Destructive Examinations 10
6.3 Shop Tests 10

6.4 Site Tests 10
7 Preparation for Shipment 11
7.1 Cleanliness 11
7.2 Painting 11
7.3 Tagging 11
7.4 Packaging and Shipping Instructions 11
8 Quality Assurance 11
8.1 QA Requirements Specific to Item(s) or Service 11
8.2 Program QA elements 11
9 Configuration Management 11
10 Documentation and Submittals 12
10.1 General 12
10.2 Submittals 12

1 Scope

1.1 Project Description and Location

The River Protection Project – Waste Treatment and Immobilization Plant (WTP) is a complex of waste treatment facilities where the US Department of Energy (DOE) Hanford Site tank waste will be put into stable glass form. The WTP Contractor will design, build and start-up the WTP pretreatment and vitrification facilities for the DOE Office of River Protection (ORP). The waste treatment facilities will pretreat and immobilize the low-activity waste (LAW) and high-level waste (HLW) currently stored in underground storage tanks at the Hanford Site.

The Hanford Site occupies an area of about 560 square miles and is located along the Columbia River, north of the city of Richland, Washington. The WTP Facility will be constructed at the east-end of the 200 East Area of the Hanford Site. The Counties of Benton, Franklin, and Grant surround the Hanford Site.

1.2 Equipment, Material, and Services Required

Design, furnish materials, fabricate, assemble, test and deliver the centrifugal pumps and accessories in accordance with this specification, including:

1.2.1 Centrifugal pumps, each complete with electric motor and accessories specified on the individual Pump Data Sheets for API 610, 8th Edition.

1.2.2 Services of an installation supervisor when required.

1.2.3 Sets of all special tools required for installation and maintenance. The order will specify the quantity of tool sets to be furnished.

1.2.4 Stainless steel shim packs shall be furnished for each mounting position for each pump and driver. The shims shall be cut and slotted to match each support surface. Each shim pack shall contain:

1 each SS shim 0.250" in thickness
2 each SS shim 0.125" in thickness
2 each SS shim 0.0625" in thickness
2 each SS shim 0.040" in thickness
2 each SS shim 0.010" in thickness
2 each SS shim 0.005" in thickness

1.2.5 One lot of consumable spare parts per item for start-up and one year operation.

1.2.6 The Seller shall advise recommended openings in start-up strainers for each pump application.

1.2.7 Each pump, motor and baseplate assembly shall include all components and accessories fully assembled, piped and wired, requiring only setting on the foundation and connecting to Buyer's piping, electrical and control systems.

1.3 Work by Others

1.3.1 Material unloading and storage at jobsite

1.3.2 Installation labor

1.3.3 Foundation and anchor bolts

1.3.4 Interconnecting pipework external to the unit

1.3.5 Electric power supply and connection

1.3.6 Wiring external to the pump and driver

1.3.7 Motor starters

1.4 Definitions and Acronyms

1.4.1 Definitions – See API-610 and:

Important to Safety (ITS)	Project classification of Structures, Systems and Components (SSCs) based on their importance to safety controlling normal releases, accident prevention, and mitigation. ITS classifications are 1) Safety Design Class (SDC), 2) Safety Design Significant (SDS), 3) Other important to safety SSCs and 4) Commercial Grade SSCs.
SDC	Safety Design Class SSCs include those that, by performing their specified safety function, prevent workers or the maximally exposed member of the public from receiving a radiological exposure that exceeds the accident exposure standards defined in the Safety Requirements Document. SDC also applies to those features that, by functioning, prevent the worker or maximally exposed member of the public from receiving a chemical exposure that exceeds the ERPG-2 (AIHA 1988) chemical release standard.
SDS	Safety classification for Important to Safety SSCs needed to achieve compliance with the radiological or chemical exposure standards for the public and workers during normal operation; and SSCs that can, if they fail or malfunction, place frequent demands on or adversely affect the function of SDC SSCs.
Other SSCs	Those SSCs that are neither SDC nor SDS.
Quality Level	WTP Project's quality classifications of SSCs based on their importance to safety. Quality Levels are 1 (QL-1), 2 (QL-2), 3 (QL-3) and Non-Quality Related. See Supplier Quality Assurance Program Requirements Datasheet and individual Pump Data Sheet.
QL-1	SDC items.

QL-2	SDS items. QL-2 shall also be used to identify other items and activities for which NQA-1 (1989) compliance is required.
QL-3	Quality Level 3 is for product quality-affecting items and associated services that affect the functionality of an SSC item that is not designated as SDC or SDS.
Non-Quality Related	Remaining SSC items and associated services (those that are not designated as SDC or SDS) that are manufactured using standard commercial practices. For designed items, quality requirements will be defined in applicable design documents.
Seismic Category	WTP Project's seismic classifications of SSCs based on their safety function. Seismic Categories are I (SC-I), II (SC-II), III (SC-III), IV (SC-IV) and V (SC-V). See Engineering Specification 2.3.8 and individual Pump Data Sheets.
SC-I	SSC important to safety and which has a seismic safety function.
SC-II	SSC important to safety, whose failure during a seismic event could prevent a Seismic Category I SSC from performing its seismic safety function.
SC-III	(a) SSC important to safety, but without seismic safety function. (b) SSC not important to safety, but has an inventory of radioactive or hazardous material in an amount less than an important-to-safety significant quantity.
SC-IV	SSC not important to safety and without an inventory of radioactive or hazardous material, but requiring seismic protection.
SC-V	SSC not important to safety and does not require seismic design

1.4.2 Acronyms of Organizations

ABMA	American Bearing Manufacturers Association
AGMA	American Gear Manufacturers Association
AIHA	American Industrial Hygiene Association
ANSI	American National Standards Institute
API	American Petroleum Institute
ASME	American Society of Mechanical Engineers
ASTM	American Society for Testing and Materials
HI	Hydraulic Institute
ISO	International Organization for Standardization
NEMA	National Electrical Manufacturers Association

NFPA	National Fire Protection Association

1.4.3 Other Acronyms

BPVC	Boiler and Pressure Vessel Code (ASME)
CFR	Code of Federal Regulations

1.5 Quality/Seismic Classifications

Quality Level and Seismic Category of each pump described in this specification will be on the individual Pump Data Sheets.

2 Applicable Documents

2.1 General

2.1.1 Work shall be done in accordance with referenced codes, standards, and documents listed below, which are an integral part of this specification.

2.1.2 When specific chapters, sections, parts, or paragraphs are listed following a code, industry standard, or reference document, only those chapters, sections, parts, or paragraphs of the document are applicable and shall be applied. If a date or revision is not listed, the latest issue, including addenda, at the time of Request for Quote (RFQ) shall apply. When more than one code, standard, or referenced document covers the same topic, the requirements for all must be met with the most stringent governing.

2.2 Codes and Industry Standards

2.2.1	40 CFR 264	*Standards for Owners and Operators of Hazardous Waste Treatment, Storage and Disposal Facilities*
2.2.2	ABMA Std. 7	*Shaft and Housing Fits for Metric Radial Ball and Roller Bearings (Except Tapered Roller Bearings) Conforming to Basic Boundary Plan*
	ABMA Std. 9	*Load Ratings and Fatigue Life for Ball Bearings*
	ABMA Std. 20	*Radial Bearings of Ball, Cylindrical Roller and Spherical Roller Types Metric Design*
2.2.3	AGMA 9002	*Bores and Keyways for Flexible Couplings (Inch Series)*
2.2.4	AIHA ERPG	*Emergency Response Planning Guidelines (1988)*
2.2.5	ANSI Z535.1	*Safety Color Code*
2.2.6	API 610	*Centrifugal Pumps for Petroleum, Heavy Duty Chemical, Eighth Edition, and Gas Industry Service. (See its Appendix A for additional Referenced Publications and International Standards)*
2.2.7	ASME B1.1	*Unified Inch Screw Threads (UN and UNR Thread Form)*
	ASME B1.20.1	*Pipe Threads, General Purpose (Inch)*

	ASME B15.1	*Safety Standard for Mechanical Power Transmission Apparatus*
	ASME B30.20	*Below-the-Hook Lifting Devices*
	ASME B16.5	*Pipe Flanges and Flanged Fittings NPS 1/2 Through NPS 24*
	ASME B31.3-96	*Process Piping*
	ASME BPVC	*Section V, Nondestructive Examination*
		Section VIII, Div. 1, Pressure Vessels
		Section IX, Welding and Brazing Qualifications
	ASME NQA-1-89	*Quality Assurance Program Requirements for Nuclear Facilities*
2.2.8	ASNT SNT-TC-1A	*Personnel Qualification and Certification in Nondestructive Testing*
2.2.9	ASTM E94	*Standard Guide for Radiographic Examination*
	ASTM E709	*Standard Guide for Magnetic Particle Examination*
2.2.10	HI M300	*Centrifugal Pump Standards*
2.2.11	ISO 1940	*Mechanical Vibration – Balance Quality Requirements of Rigid Rotors (Part 1 & 2)*
2.2.12	NEMA MG 1	*Motors and Generators*
2.2.13	NFPA-70	*National Electric Code*

2.3 Engineering Standards

2.3.1 24590-WTP-3PS-G000-T0001, *General Specification for Supplier Quality Assurance Program Requirements*

2.3.2 24590-WTP-3PS-G000-TP002, *Specification for Positive Material Identification (PMI)*

2.3.3 24590-WTP-3PS-G000-T0003, *General Specification for Packaging, Shipping, Handling and Storage Requirements*

2.3.4 24590-WTP-3PS-MUMI-T0001, *Specification for Medium Voltage Induction Motors*

2.3.5 24590-WTP-3PS-MUMI-T0002, *Specification for Low Voltage Induction Motors*

2.3.6 24590-WTP-3PS-EVV1-T0001, *Specification for Low Voltage Adjustable Speed Drives*

2.3.7 24590-WTP-3PS-SS90-TP001, *Specification for Seismic Qualification of Seismic Category I/II Equipment and Tanks*

3 Design Requirements

3.1 Basic Function

3.1.1 These centrifugal pumps will move liquids between locations requiring a QL-1 or QL-2 pump.

3.1.2 The pumps may be located in "hot cells" which will require remote maintenance and handling design features. (See the individual Pump Data Sheets.)

3.2 Performance

See the individual Pump Data Sheets.

3.3 Design Conditions

3.3.1 See the individual Pump Data Sheets.

3.3.2 The equipment and appurtenances will be used in a plant that has a nominal design life of 40 years. The design objective for these centrifugal pumps shall be based on a useful life expectancy of 40 years with periodic maintenance as recommended by the Seller.

3.3.3 This (Bechtel WTP) specification covers the minimum requirements for centrifugal pumps designed in accordance with API Standard 610, Eighth Edition, "Centrifugal Pumps for Petroleum, Heavy Duty Chemical, and Gas Industry Services" as modified by this section. Bulleted items in API 610 not addressed in this specification shall have the decisions noted on the individual Pump Data Sheets.

The terms "Supplier" or "Seller" in this specification is equivalent to "Vendor" as defined in API 610.

API 610 Paragraph Numbers

The paragraph numbers in this Section correspond to those in API 610 and each of the paragraphs denotes an "Addition", "Decision", or "Modification" to the API requirements.

1.2.2 (Decision) Dimensions shall be US Standard. Pumps shall comply with applicable US Standards unless a Code or Standard specified dictates otherwise. (See modification of API Paragraph 1.3, Conflicting Requirements.)

1.3 Conflicting Requirements (Modification)

In case of conflict between this specification and other referenced documents, Buyer shall be notified. If no resolution, the following order of precedence shall govern:

- Purchase Order
- Data Sheets
- This Specification
- API 610
- Other referenced specifications and standards

2.1.1 (Modification) Design service life is 40 years. See 3.3.2 of this (Bechtel WTP) specification.

2.1.9 (Decision) Pump Suction Specific Speed (S) shall not exceed 12,000 (calculated using rotative speed in rev/min, BEP flow at the maximum diameter impeller in GPM and NPSH in feet). Pumps offered with suction specific speeds > 12,000 may be accepted subject to Buyer's written approval.

2.1.11 (Addition) Pumps for parallel operation shall have equal head rise (within ±1 % as measured on the performance test) to shutoff.

2.1.14 (Addition) Noise level shall not exceed 85 dBA measured 3 ft from the edge of the baseplate.

2.1.29 (Decision) Pumps and auxiliaries shall be suitable for outdoor installation in the climatic zone specified on the data sheets, but will normally be located indoors.

2.2.4 (Modification) The maximum allowable working pressure shall apply to all parts referred to in the definition of "pressure casing" (See API paragraph 1.4.40), except for double-casing pumps. Components and sections of double-casing pumps which are normally subjected to suction pressure shall be designed to permit, as a minimum, a hydrostatic test pressure equal to the casing maximum allowable working pressure.

2.3.2.1 (Modification) All pumps, except double-casing designs, shall have suction and discharge flanges of equal rating.

2.3.3.3 (Decision) Cylindrical threads shall not be used.

2.3.3.10 (Addition) Unless otherwise specified on individual Pump Data Sheets, casings shall be provided with flanged vents and drains. Flanges shall be the same rating as the pump discharge nozzle.

2.3.3.11 (Decision) Pressure gauge connections shall not be provided.

2.6.4.1 (Addition) The wear ring running clearance (adjusted for temperature) and diameter, shall be clearly stated in the proposal for each service. Pump efficiencies shall be based on the corrected clearances.

3.2.12 (Addition) If non-sparking coupling guards are required, they shall be specified on the data Sheets.

3.3.3 (Addition) Centers of the mounting pads shall be at the correct relative elevation with 0.002 inch per foot of separation between the pads. Each pad shall be machined flat to within 0.002 inch total variation across the surfaces.

3.3.21 (New) To insure that final alignment can be achieved in the field, the equipment manufacturer shall align the pump and driver to within 0.010 inch parallel offset and 0.002 inch/inch angular in the shop. The bolts shall be centered in their holes after the preliminary alignment. Undercutting of hold-down bolts is not acceptable.

Note: Hold down bolts shall not be bolt bound after final alignment in the field. The hold-down bolt shall be reasonably centered, based on visual inspection after the final field alignment.

4.3.2.1a (Modification) Double-casing pumps and other special-design pumps, as approved by an engineering representative of the purchaser, may be segmentally tested at the appropriate section pressure. Segmental hydro testing of horizontal multistage pumps is not acceptable. Hydrostatic testing, whether on a component basis or assembled pump, shall be done after all machining and welding (such as piping connections, drain, vents, seal welding) has been completed.

4.3.3.2 (Modification) Bearing temperatures shall be measured at all five points of the performance test.

4.3.4.1.1 (Addition) NPSHR test shall be performed if the NPSH required by the pump differs from the specified available NPSH by 3 feet or less. The NPSH test will be a vacuum tank suppression test unless a suction valve throttling test has been approved by the purchaser.

5.2.6.2b (Decision) The oil side operating pressure shall be higher than the water side operating pressure.

5.2.6.2c1 (Modification) Reservoir retention time shall be at least 5 minutes.

5.2.6.2e (Modification) A duplex full-flow filter with replaceable elements and filtration of 10 microns nominal or finer shall be provided.

SECTION 6 – SUPPLIER'S DATA The requirements of Section 3 of the Material Requisition shall be applicable in addition to the API-610 requirements.

End Of Comments to API 610

3.4 Environmental Conditions

3.4.1 See individual Pump Data Sheets.

3.4.2 When noted on the Data Sheets, motors shall have radiation shielding or radiation hardened motors as specified. The shielding shall be furnished by the motor Seller with consideration for motor cooling air flow.

3.4.3 When noted on the Data Sheets, all bearings shall have special radiation resistant lubricants.

3.4.4 When noted on the Data Sheets, the seal elastomer components shall use high radiation-tolerance materials.

3.5 Mechanical Requirements

See API 610 and individual Pump Data Sheets.

3.6 Loading

3.6.1 Must meet the API 610 requirements.

3.6.2 See the individual Pump Data Sheets for Seismic Classification.

3.7 Electrical Requirements

3.7.1 See the individual Motor Data Sheets, if provided, otherwise the individual Pump Data Sheets.

3.7.2 Electric motors shall meet the requirements of Project Specifications 24590-WTP-3PS-MUMI-T0001 or 24590-WTP-3PS-MUMI-T0002 for Induction Motors.

3.7.3 Adjustable Speed Drive Motors shall be in accordance with Project Specification 24590-WTP-3PS-EVV1-T0001, for Low Voltage Adjustable Speed Drives.

3.8 Instrumentation and Control Requirements

3.8.1 See the individual Pump Data Sheets.

3.9 Remote Handling Requirements

3.9.1 When Remote Handling capability is required per the individual Pump Data Sheets, detailed specifications and drawings of the Remote Handling requirements will be included. Pumps shall be furnished with Remote Handling provisions in accordance with Project requirements.

3.9.2 Detailed drawings of modifications for Remote Handling shall be furnished for Buyer review prior to the start of work.

4 Materials

4.1 Construction

See the individual Pump Data Sheets and, if provided, the individual Motor Data Sheets.

4.2 Prohibited Materials

4.2.1 Bronze, copper, lead, zinc, tin, antimony, cadmium, or other low melting point metals, their alloys, or materials containing such metals as their basic constituents, or molybdenum and halogens, shall not be used in direct contact with stainless steel, with the exception of oil impregnated bronze bearings. This prohibition applies to the use of tools, fixtures, paints, coatings and sealing compounds, and any other equipment or materials used by the Seller in handling, assembly and storage of stainless steel parts or components.

4.2.2 The use of Teflon seals is prohibited.

4.2.3 The use of asbestos is prohibited.

4.3 Special Requirements

4.3.1 See the individual Pump Data Sheets and, if provided, the individual Motor Data Sheets.

4.4 Storage of Special Materials prior to work

The Seller shall advise any special storage requirements.

5 Fabrication

5.1 Welding

5.1.1 Welding and weld repairs shall follow the requirements of API 610 and other referenced codes and standards as applicable.

5.1.2 Weld repair records shall be included with document package.

5.2 Assembly

Where possible, the pump, motor, baseplate assemblies shall be shipped as a complete package. When this is not possible, Seller shall advise Buyer in advance.

5.3 Heat Treatment

Heat treatment shall be conducted as required by Seller, API 610 and other referenced codes and standards.

5.4 Other Processes (as required)

Positive Material Identification is required for pressure retaining casings per Engineering Standard 2.3.2.

6 Tests and Inspections

6.1 Personnel Qualifications

Qualification of Seller's inspection and test personnel shall be verified by the Buyer's Supplier Quality Representative.

6.2 Non-Destructive Examinations

Personnel performing non-destructive examinations or reviewing such test results shall be certified to ASNT Standard SNT-TC-1A.

6.3 Shop Tests

6.3.1 Seller shall conduct and be responsible for all shop tests listed in the individual Pump Data Sheets, the individual Motor Data Sheets (if provided), API-610 and other applicable standards and reference documents. Tests may be witnessed by the Buyer's Supplier Quality Representative.

6.3.2 Seller shall furnish all facilities necessary for the performance of such tests. In the event Seller's own facilities are not suitable for such tests, Seller shall advise Buyer and obtain advanced written permission for using alternative facilities. This shall include testing to verify remote handling requirements, if specified.

6.4 Site Tests

Buyer's startup personnel will run field performance tests after installation. Buyer may request Seller's assistance during startup.

7 Preparation for Shipment

7.1 Cleanliness

All dirt, oil, grease, loose mill scale, weld spatter and other foreign matter shall be removed from all surfaces per API 610, Engineering Standards 24590-WTP-3PS-G000-T0003.

7.2 Painting

After visual examination, all exposed surfaces shall be primed and coated in accordance with Seller's standard procedures and API 610. Seller shall submit their conforming procedures as part of the documentation package. Color, if specified, shall be advised later.

7.3 Tagging

Tagging shall be per Paragraph 2.12 of API 610.

7.4 Packaging and Shipping Instructions

7.4.1 All equipment shall be packed, securely anchored and protected for shipment in accordance with Engineering Standard 24590-WTP-3PS-G000-T0003. Pumps, drive motors and all furnished auxiliaries shall be shipped fully assembled on their specific baseplates. Non-mounted drivers, if approved by Buyer, shall be shipped along with the main assembly.

7.4.2 Special applications requiring different shipping instructions shall be mutually agreed by Buyer and Seller.

8 Quality Assurance

8.1 QA Requirements Specific to Item(s) or Service

8.1.1 The Seller Quality Assurance Program (QAP) requirements are included in 24590-WTP-3PS-G000-T0001.

8.1.2 Seller's QAP Manual shall be submitted to Buyer for review in accordance with 24590-WTP-3PS-G000-T0001.

8.2 Program QA elements

Seller's Quality Assurance Program, as a minimum, shall contain the requirements detailed in the Supplier Quality Assurance Program Requirements Data Sheets listed in Section 2 of the Material Requisition.

9 Configuration Management

Equipment and/or components covered by this specification are identified with Plant Item (equipment tag) numbers as given on the individual Data Sheets. Each item shall be tagged per Section 7.3.

10 Documentation and Submittals

10.1 General

10.1.1 Submittals and document quantities, including Drawings, Installation Procedures, Inspection and Test Reports, Calculations, Manuals, Certificates of Conformance, Schedules, Material Certificates, and others appropriate to the purchased equipment, are detailed in Section 3 of the Material Requisition, including Forms G-321-E and G-321-V, and Section 6.3 of API 610.

10.1.2 The documents and data shall include information listed in the Descriptions in Appendix O of API 610.

10.2 Submittals

10.2.1 Drawings shall satisfy Section 3 of the Material Requisition, and Section 6.3 of API 610.

10.2.2 Priced recommended spare parts lists for start-up and one (1) year's operation along with complete lists of equipment parts with drawings showing assembly locations shall be provided. See Paragraph 6.3.5 of API 610. Seller shall identify limits to shelf-life and storage requirements of parts anticipated to have functional life spans shorter than the equipment design life.

10.2.3 Inspection and Test Reports shall be provided in accordance with Sections 3 and 5 of the Material Requisition, and Appendix O of API 610.

10.2.4 Forces and Moments capabilities, as a minimum, shall meet requirements of Paragraph 2.4 of API 610. Calculations, if specified, shall be furnished.

10.2.5 Manuals shall be furnished to provide information on the correct installation, operation and maintenance of the equipment assembly. They shall be as described in Appendix O of API 610.

10.2.6 Manufacturing schedules and progress reports shall be furnished and sent directly to the Project Expeditor as shown in Section 3 of the Material Requisition.

ISSUED BY
RPP-WTP PDC
DE 4/4/03
INIT DATE

R10030178

RIVER PROTECTION PROJECT – WASTE TREATMENT PLANT

ENGINEERING SPECIFICATION

FOR

General Centrifugal Pumps to Meet Requirements of ASME B73.1M-1991 and ASME B73.2M-1991 for Commercial (CM) Components

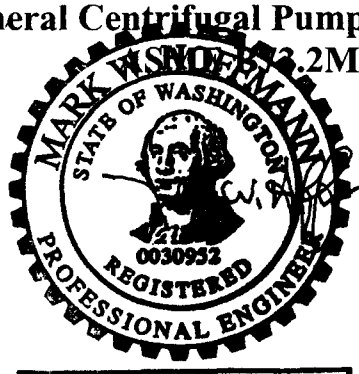

4/2/03

EXPIRES 12/10/04

Content applicable to ALARA? ☐ Yes ☐ No

ADR No. **Rev**

DIM No. **Rev**

NOTE: Contents of this document are Dangerous Waste Permit affecting.

Quality Designator
CM
DOE Contract No. DE-AC27-01RV14136

REV	DATE	REASON FOR REVISION	BY	CHECK	REVIEW	QA	APEM/DCE
1	4/2/03	Issued for Permitting Use				NA	
0	9/17/02	Issued for Permitting Use	J.Jackson	W. Honsaker		NA	S. Kirk

SPECIFICATION No. **Rev**
24590-WTP-3PS-MPC0-TP002 1

Processed/ Date Entry ☐ Copied/ QA ☐ Scanned ☐ Filed
4/4/03

Contents

1 Scope 1
1.1 Project Description and Location 1
1.2 Equipment, Material, and Services Required 1
1.3 Work by Others 1
1.4 Definitions and Acronyms 2
2 Applicable Documents 2
2.1 General 2
2.2 Codes and Industry Standards 3
2.3 Reference Documents 4
3 Design Requirements 4
3.1 Basic Function 4
3.2 Performance 4
3.3 Design Conditions 5
3.4 Environmental Conditions 5
3.5 Mechanical Requirements 5
3.6 Loadings 5
3.7 Electric Motors 6
3.8 Instrumentation and Control Requirements 6
3.9 Accessibility and Maintenance 6
4 Materials 6
4.1 Construction 6
4.2 Prohibited Materials 7
4.3 Special Requirements 7
4.4 Storage of Special Materials (such as stainless steel) Prior to Work 7
5 Fabrication 7
5.1 Welding 7
5.2 Assembly 7
6 Tests and Inspections 8
6.1 Personnel Qualifications 8
6.2 Hydrostatic Test 8
6.3 Shop Tests 8
6.4 Site Tests 8
6.5 Positive Material Identification 8

6.6 Safety Requirements 8
7 Preparation for Shipment 9
7.1 Cleanliness 9
7.2 Painting 9
7.3 Tagging 9
7.4 Packaging 9
8 Quality Assurance 9
8.1 QA Requirements Specific to Items or Service 9
8.2 Program QA Elements 10
9 Configuration Management 10
10 Documentation and Submittals 10
10.1 General 10
10.2 Submittals 10

Figure

Figure 1 Pump Operating Range 12

1 Scope

1.1 Project Description and Location

The River Protection Project - Waste Treatment Plant (WTP) is a waste treatment facility where the US Department of Energy (DOE) Hanford Site tank waste will be processed into stable glass form. The Waste Treatment Plant contractor will design, build, and start up the WTP pretreatment and vitrification facilities for the DOE Office of River Protection. The waste treatment facilities will pretreat and immobilize the low-activity waste and high-level waste currently stored in underground storage tanks at the Hanford Site.

The Hanford Site occupies an area of about 560 square miles and is located along the Columbia River, north of the city of Richland, Washington. The WTP Facility will be constructed at the east end of the 200 East Area of the Hanford Site. The counties of Benton, Franklin, and Grant surround the Hanford Site.

1.2 Equipment, Material, and Services Required

Seller shall design, fabricate, and test centrifugal pumps and accessories in accordance with ANSI/ASME Standards B73.1M & B73.2M including:

1.2.1 Horizontal centrifugal pumps complete with electric motor, baseplate, and accessories as specified in individual pump data sheets

1.2.2 Vertical in-line centrifugal pumps complete with electric motor and accessories as specified in individual pump data sheets

1.2.3 Specific modifications to pump, attachments, baseplate, baseplate attachments, electric motor, or electric motor attachments as detailed in individual pump data sheets

1.2.4 One lot of consumable spare parts per item for startup and one year operation

1.2.5 Stainless steel (SS) shim packs for each foot mounting position for each pump and driver; the shims shall be cut and slotted to match each support baseplate; each shim pack shall contain:

- 1 each SS shim 0.250" in thickness
- 2 each SS shim 0.125" in thickness
- 2 each SS shim 0.0625" in thickness
- 2 each SS shim 0.040" in thickness
- 2 each SS shim 0.010" in thickness
- 2 each SS shim 0.005" in thickness

1.3 Work by Others

1.3.1 Material unloading and storage at job site

1.3.2 Installation labor

1.3.3 External piping

1.3.4 Electrical power supply

1.3.5 Wiring external to the pump

1.3.6 Motor starters (except adjustable speed drive motors)

1.4 Definitions and Acronyms

1.4.1 Definitions - See ANSI/ASME B73.1M and ANSI/ASME B73.2M and:

Buyer

Bechtel National, Inc. for the WTP

Seller

Designer, manufacturer, fabricator, vendor, supplier, bidder who provides equipment, components, services, or other products for delivery or of direct benefit to the Buyer.

1.4.2 Acronyms of organizations and terms

ABMA	American Bearing Manufacturers Association
AIHA	American Industrial Hygiene Association
ANSI	American National Standards Institute
ASME	American Society of Mechanical Engineers
AWS	American Welding Society
BEP	Best Efficiency Point
NEMA	National Electrical Manufacturers Association
NPSH	Net Positive Suction Head
PIP	Process Industry Practices

2 Applicable Documents

2.1 General

2.1.1 Work shall be done in accordance with referenced codes, standards, and documents listed below, which are an integral part of this specification.

2.1.2 When specific chapters, sections, parts, or paragraphs are listed following a code, industry standard, or reference document, only those chapters, sections, parts, or paragraphs of the document are applicable and shall be applied. If a date or revision is not listed, the latest issue including addenda at the time of request for quote (RFQ) shall apply. When more than one code, standard, or referenced document covers the same topic, the requirements for all must be met, complying with the most stringent combination of requirements.

2.2 Codes and Industry Standards

ANSI/ASME B73.1M	*Specification for Horizontal End Suction Centrifugal Pumps for Chemical Process-1991*
ANSI/ASME B73.2M	*Specification for Vertical In-Line Centrifugal Pumps for Chemical Process-1991*
ANSI/ASME B16.1	*Cast Iron Pipe Flanges and Flanged Fittings*
ANSI/ASME B16.5	*Pipe Flanges and Flanged Fittings*
ANSI/ABMA 9	*Load Ratings and Fatigue Life for Ball Bearings*
ANSI/ABMA 11	*Load Ratings and Fatigue Life for Roller Bearings*
ANSI/ASME B15.1	*Safety Standard for Mechanical Power Transmission Apparatus*
ASME B1.1	*Unified Inch Screw Threads*
ASME Section VIII, Division 1	*American Society of Mechanical Engineers, Boiler and Pressure Vessel Code (BPVC), Section VIII, Division 1, "Rules for Construction of Pressure Vessels"*
ASME Section IX	*BPVC Section IX, Qualification Standard for Welding and Brazing Procedures, Welders, Brazers, and Welding and Brazing Operators*
ASME NQA-1 1989	*Quality Assurance Requirements for Nuclear Facilities*
PIP RESP002	*Design of ASME B73.1 and General Purpose Pump Baseplates*
PIP RESP73H-97	*Application of ASME B73.1M-1991 Specification for Horizontal End Suction Centrifugal Pumps for Chemical Process*
PIP RESP73V-97	*Application of ASME B73.2M-1991 Specification for Vertical In-Line Centrifugal Pumps for Chemical Process*
UBC	*Uniform Building Code-1997*
40 CFR 264	*Code of Federal Regulations Part 264-Standards for Owners and Operators of Hazardous Waste Treatment, Storage and Disposal Facilities*
29 CFR 1910	*Code of Federal Regulations Part 1910-Occupational*

	Safety and Health Standards (OSHA)-1995
HIS	*Hydraulic Institute Standards*

2.3 Reference Documents

24590-WTP-3PS-G000-T0001	*General Specification for Supplier Quality Assurance Program Requirements*
24590-WTP-3PS-G000-TP002	*Specification for Positive Material Identification (PMI)*
24590-WTP-3PS-G000-T0003	*General Specification for Packaging, Shipping, Handling and Storage Requirements*
24590-WTP-3PS-EVV1-T0001	*Engineering Specification for Low Voltage Adjustable Speed Drives*
24590-WTP-3PS-MUMI-T0001	*Specification for Medium Voltage Induction Motors*
24590-WTP-3PS-MUMI-T0002	*Specification for Low Voltage Induction Motors*
24590-WTP-3PS-FB01-T0001	*Engineering Specification for Structural Design Loads for Seismic Category III & IV Equipment and Tanks*

3 Design Requirements

3.1 Basic Function

The centrifugal pumps shall provide motive force required to move various process liquids (defined in individual pump data sheets) in the facilities that make up the WTP project.

3.2 Performance

3.2.1 Pump head capacity characteristic curves shall be selected to rise continuously as flow is reduced to shutoff. Head rise to shutoff shall be at least 10 % of the head at the rated capacity as specified in PIP RESP73V-97 (paragraph 4.1.4.1) and PIP RESP73H-97 (paragraph 4.1.4.1).

3.2.2 Pump shall be capable of a minimum head increase of 5 % at the rated flow by installing a new impeller, up to the maximum allowable shown on the Seller's typical pump curves. Impeller sizing shall be as specified in PIP RESP73V-97 (paragraph 4.1.4.3) and PIP RESP73H-97 (paragraph 4.1.4.3).

3.2.3 The net positive suction head (NPSH) available shall exceed the NPSH required by at least 3 ft from minimum continuous flow to 110 % of rated operating point.

3.2.4 Pumps with suction specific speeds (N_{ss}) greater than 11,000 require approval from the Buyer.

3.2.5 Both the normal and rated flow rates shall be within the acceptable and preferred flow rate ranges established in Figure 1. Buyer approval is required before deviating from this chart.

3.3 Design Conditions

3.3.1 Equipment and accessories are to be used in a plant with a design life of 40 years. The design objective for pumps purchased to this specification shall be 40 years of useful life with periodic maintenance as recommended by the Seller. Maintainable items shall be specified for cost-effective design life spans, taking into account current technology and standards.

3.3.2 Specific design conditions shall be detailed in individual pump data sheets for each pump.

3.4 Environmental Conditions

3.4.1 Pumps shall be subjected to the operating conditions specified in individual pump data sheets.

3.4.2 When noted in individual pump data sheets, the seal elastomer components shall use radiation-tolerant materials.

3.4.3 When noted in individual pump data sheets, bearings may require special radiation resistant lubricants.

3.5 Mechanical Requirements

3.5.1 See individual pump data sheets.

3.5.2 Suction and discharge nozzles shall be flanged in accordance with ANSI/ASME B73.1M (paragraph 4.2) or ANSI/ASME B73.2M (paragraph 4.2). See individual pump data sheets for additional requirements.

3.5.3 Modifications or special nozzle configurations are specified in individual pump data sheets.

3.5.4 Seal gland shall be as specified in ANSI/ASME B73.1M, (paragraph 4.6.6) or ANSI/ASME B73.2M, (paragraph 4.6.6). For services where the pump case is a higher grade alloy, the seal gland shall be of the same material as the pump case or an alloy of greater corrosion resistance. See paragraph 6.5 of this specification for positive material identification requirements.

3.5.5 Unless otherwise specified, horizontal end suction centrifugal pumps shall be supplied with grouted baseplates designed in accordance with reference PIP RESP002 (paragraph 4).

3.5.6 The underside of fabricated baseplates beneath pump and driver supports shall have reinforcing cross members welded to full depth. The members shall be shaped to be held in position by the grout. All welding shall be continuous. Stitch welding, top or bottom, is unacceptable.

3.6 Loadings

3.6.1 Seller shall submit allowable flange loadings to Buyer for review.

3.6.2 Pumps shall be designed for seismic loads as specified in the individual pump data sheets. Design loads shall be calculated in accordance with *Engineering Specification for Structural*

Design Loads for Seismic Category III & IV Equipment and Tank, (24590-WTP-3PS-FB01-T0001).

3.7 Electric Motors

3.7.1 Medium and low voltage induction motors shall conform to specifications *Specification for Medium Voltage Motors* (24590-WTP-3PS-MUMI-T0001) and *Specification for Low Voltage Motors* (24590-WTP-3PS-MUMI-T0002) respectively.

3.7.2 Adjustable speed drives shall be in accordance with *Engineering Specification for Low Voltage Adjustable Speed Drives* (24590-WTP-3PS-EVV1-T0001).

3.7.3 Electric motors shall be sized so that they are not overloaded at any point on the performance curve.

3.7.4 For other requirements see individual motor data sheets, if provided; otherwise see additional motor specifications listed in the individual pump data sheets.

3.8 Instrumentation and Control Requirements

3.8.1 Barrier fluid systems, when specified in individual pump data sheets, shall be equipped with seal failure detection as required by 40 CFR 264. Switch supplied shall be a single pole double throw (SPDT), hermetically sealed dry contact design suitable for the environmental conditions where it is located.

3.8.2 Seal failure detection on barrier fluid systems shall include discrete contacts for Buyer's external alarm as required by 40 CFR 264.

3.9 Accessibility and Maintenance

3.9.1 Frequency of inspection and maintenance intervals shall be in accordance with equipment Seller's recommendations or as required by plant maintenance.

3.9.2 Buyer's layout specifies access and space requirements to facilitate maintenance during normal plant operation or scheduled shutdown.

3.9.3 Detailed drawings of facility specific maintenance equipment requirements, if any, are referenced in individual pump data sheets.

3.9.4 Seller shall advise recommended screen size or perforation size in startup strainers for each pump application.

4 Materials

4.1 Construction

4.1.1 See individual pump data sheets.

4.1.2 Horizontal end suction centrifugal pump construction shall be in accordance with ANSI/ASME B73.1M.

4.1.3 Vertical in-line centrifugal pump construction shall be in accordance with ANSI/ASME B73.2M.

4.1.4 Restrictions to repair of pressure containing or wetted parts shall be in accordance with ANSI/ASME B73.1M, (paragraph 4.8) or ANSI/ASME B73.2M, (paragraph 4.8).

4.2 Prohibited Materials

4.2.1 Bronze, copper, lead, zinc, tin, antimony, cadmium, or other low melting point metals, their alloys or materials containing such metals as their basic constituents, or molybdenum and halogens shall not be used in direct contact with stainless steel with the exception of oil impregnated bronze bearings. This prohibition applies to the use of tools, fixtures, paints, coatings and sealing compounds, and any other equipment or materials used by the Seller in handling, assembly, and storage of stainless steel parts or components.

4.2.2 The use of asbestos is prohibited.

4.3 Special Requirements

Special conditions and requirements, if any, are detailed in individual pump data sheets.

4.4 Storage of Special Materials (such as stainless steel) Prior to Work

Storage of special materials (Seller's location) shall be in accordance with the Seller's QAP and *General Specification for Packaging, Shipping, Handling and Storage Requirements* (24590-WTP-3PS-G000-T0003).

5 Fabrication

5.1 Welding

5.1.1 Weld repairs required to certify pressure containing parts shall be performed and inspected by qualified operators using procedures which are qualified in accordance with Section VIII, Division 1 and Section IX of the ASME Code.

5.1.2 Weld repair records shall be included with document submittal package.

5.2 Assembly

5.2.1 Pump and driver mounted by the Seller shall be properly aligned prior to shipment. To ensure that final alignment can be achieved in the field, the equipment Seller shall align the pump and driver within 0.002 inch parallel offset. The driver shall not be bolt bound in any direction, and hold down bolts shall not be undercut or undersized to relieve this condition as required by PIP RESP73H (paragraph 7.4).

5.2.2 Each pump, motor, and baseplate assembly shall include all components and accessories fully assembled, piped, and wired, requiring only setting on the foundation and connecting Buyer's piping, electrical, and control systems.

6 Tests and Inspections

6.1 Personnel Qualifications

Seller's inspection and test personnel qualifications shall be verified by Buyer's supplier quality representative.

6.2 Hydrostatic Test

Hydrostatic tests on machined parts shall be in accordance with ANSI/ASME B73.1M (paragraph 5.2.1) or ANSI/ASME B73.2M (paragraph 5.2.1). See individual pump data sheets for additional tests.

6.3 Shop Tests

6.3.1 Buyer's inspection plan shall indicate tests and inspections to be witnessed. The individual pump data sheets may further define inspection, test requirements, and pump media type.

6.3.2 Pump performance tests shall be performed per Hydraulic Institute Standards (HIS) as required by ANSI/ASME B73.1M (paragraph 5.2) or ANSI/ASME B73.2M (paragraph 5.2).

6.4 Site Tests

Buyer's startup personnel shall perform field tests after installation. Buyer may request Seller's assistance during startup at no additional cost.

6.5 Positive Material Identification

Positive material identification (PMI) shall be performed in accordance with *Specification for Positive Material Identification (PMI)* (24590-WTP-3PS-G000-TP002).

6.6 Safety Requirements

6.6.1 See individual pump data sheets for specific safety requirements.

6.6.2 Safety guards shall be furnished in accordance with ANSI/ASME B73.1M, (paragraph 4.12.1) or ANSI/ASME B73.2M (paragraph 4.12.1).

6.6.3 The noise level produced by each pump shall comply with OSHA standards found in 29 CFR 1910.

7 Preparation for Shipment

7.1 Cleanliness

All dirt, oil, grease, loose mill scale, weld splatter, and other foreign matter shall be removed from all surfaces in accordance with *General Specification for Packaging, Shipping, Handling and Storage Requirements*.

7.2 Painting

Manufacturer's standard procedures shall be submitted for Buyer's review.

7.3 Tagging

7.3.1 Nameplate shall be provided and attached as specified in ANSI/ASME B73.1M (paragraph 5.3) or ANSI/ASME B73.2M (paragraph 5.3).

7.3.2 Buyer's equipment number listed on the individual pump data sheets shall also be included on nameplate.

7.3.3 Buyer's instrument tag numbers listed on the individual instrument data sheets shall be included on name tags affixed to instruments. Seller shall supply stainless steel wired instrument tags engraved with Buyer's purchase order number, item number, and instrument tag number.

7.4 Packaging

7.4.1 All equipment shall be packed, securely anchored, and protected for shipment in accordance with *General Specification for Packaging, Shipping, Handling and Storage Requirements*. Non-mounted drivers (if approved by Buyer) shall be shipped along with the main pump assembly unless otherwise agreed by Buyer or specified on individual pump data sheets.

7.4.2 Pumps, drive motors, and all furnished auxiliaries shall be shipped fully assembled on their specific baseplates. Special applications requiring different shipping instructions are detailed in individual pump data sheets.

8 Quality Assurance

8.1 QA Requirements Specific to Items or Service

8.1.1 The Seller's quality assurance program (QAP) requirements are included in *General Specification for Supplier Quality Assurance Program Requirements* (24590-WTP-3PS-G000-T0001).

8.1.2 Seller's QAP manual shall be submitted to Buyer for review in accordance with *General Specification for Supplier Quality Assurance Program Requirements*.

8.2 Program QA Elements

Seller's QAP, at a minimum shall contain the requirements detailed in the Supplier QAP requirements data sheets listed in section 2 of the material requisition.

9 Configuration Management

Equipment covered by this specification is identified with equipment numbers listed in individual pump data sheets. Each item is identified in accordance with Tagging in paragraph 7.3 of this specification.

10 Documentation and Submittals

10.1 General

10.1.1 Documents required by Buyer shall be made available as prescribed in A1 through A3, Appendix A, of ANSI/ASME B73.1M or ANSI/ASME B73.2M. See section 3 of the material requisition for submittal format requirements.

10.1.2 Submittals and document quantities including drawings, installation procedures, inspection and test reports, calculations, manuals, certificates of conformance, schedules, and material certificates are detailed in section 3 (G-321-E Form) of the material requisition.

10.2 Submittals

10.2.1 Drawings

Drawings shall be inclusive of all the following requirements:

10.2.2 Outline drawings of pump assembly, including outline and detail drawings for each component

10.2.3 Mounting dimensions and information required for the design of supports and foundations

10.2.4 Locations and identification of parts included in the parts list

10.2.5 Wiring, schematic diagrams and data; diagrams including wire gauges applicable to the supplied units only; external connections for power and measurement shown on these diagrams; submittals to meeting requirements specified in *Specification for Medium Voltage Motors* (24590-WTP-3PS-MUMI-T0001, paragraph 10.1) or *Specification for Low Voltage Motors* (24590-WTP-3PS-MUMI-T0002, paragraph 10.1) as applicable

10.2.6 Pump performance curve showing NPSH required, horsepower, efficiency, and flow vs. head at applicable speeds

10.2.7 Drawing submittal requirements as shown on G-321-E form of the material requisition

10.2.8 Mechanical seal drawing for pumps specified in individual pump data sheets

10.2.9 Parts List

A list of all pump parts for startup and 1-year operation shall be provided by Seller as prescribed in ANSI/ASME B73.1M (paragraph A3.3) or ANSI/ASME B73.2M (paragraph A3.3). Seller shall identify useful shelf life and storage requirements of parts anticipated to have functional life spans shorter than the pump design life.

10.2.10 Inspection and Test Reports

Seller shall provide test reports in accordance with ANSI/ASME B73.1M (paragraph 5.2) or ANSI/ASME B73.2M (paragraph 5.2). See section 5 and section 3 of the material requisition.

10.2.11 Forces and Moments

Allowable external forces and moments on pump nozzles shall be provided as prescribed in ANSI/ASME B73.1M (paragraph A3.2) or ANSI/ASME B73.2M (paragraph A3.2).

10.2.12 Manuals

Manuals shall be supplied to provide information on the correct installation, operation, and maintenance of the pump assembly. Manuals shall be as prescribed in ANSI/ASME B73.1M (paragraph A2.3.8) or ANSI/ASME B73.2M (paragraph A2.3.8).

10.2.13 Schedules

Seller shall provide fabrication and delivery schedule and progress reports for pumps described in individual pump data sheets. See section 3 of the material requisition for submittal requirements.

Figure 1 Pump Operating Range

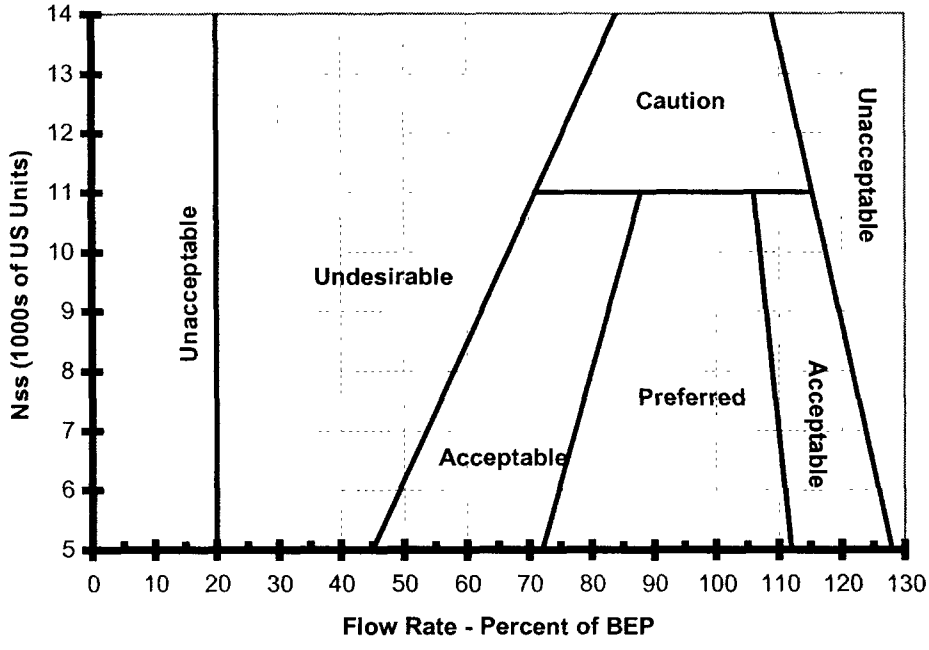

R10315603

ISSUED BY
RPP-WTP PDC
INIT DATE

RIVER PROTECTION PROJECT – WASTE TREATMENT PLANT

ENGINEERING SPECIFICATION

FOR

Sealless Centrifugal Pumps to Meet Requirements of API Standard 685, First Edition, and for Quality Levels QL-1 and QL-2

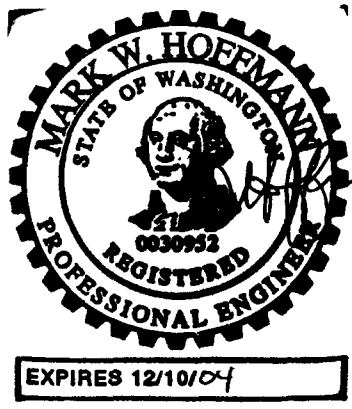

This bound document contains a total of 14 sheets.

Content applicable to ALARA? ☒ Yes ☐ No

ADR No.
N/A

Rev

Quality Designator
QL
DOE Contract No. DE-AC27-01RV14136

NOTE: Contents of this document are Dangerous Waste Permit affecting.

REV	DATE	REASON FOR REVISION	BY	CHECK	REVIEW	QA	APEM/DEM
1	5/28/04	Issued for Permitting Use				N/A	
0	10/4/02	Issued for Permitting Use	Jessica Jackson	W. Honsaker	N/A	N/A	S. Kirk

SPECIFICATION No. 24590-WTP-3PS-MPC0-TP003 **Rev** 1

0 5/28/04

Notice

Please note that source, special nuclear, and byproduct materials, as defined in the Atomic Energy Act of 1954 (AEA), are regulated at the US Department of Energy (DOE) facilities exclusively by DOE acting pursuant to its AEA authority. DOE asserts, that pursuant to the AEA, it has sole and exclusive responsibility and authority to regulate source, special nuclear, and byproduct materials at DOE-owned nuclear facilities. Information contained herein on radionuclides is provided for process description purposes only.

Contents

Notice ii

1 Scope 1

1.1 Project Description and Location 1
1.2 Equipment, Material, and Services Required 1
1.3 Work by Others 2
1.4 Definitions and Acronyms 2
1.5 Quality/Seismic Classifications 2

2 Applicable Documents 3

2.1 General 3
2.2 Codes and Industry Standards 3
2.3 Engineering Specifications 3

3 Design Requirements 3

3.1 Basic Function 3
3.2 Performance 4
3.3 Design Conditions 4
3.4 Environmental Conditions 6
3.5 Mechanical Requirements 6
3.6 Loadings 6
3.7 Electrical Requirements 6
3.8 Instrumentation and Control Requirements 7
3.9 Remote Handling Requirements 7

4 Materials 7

4.1 Construction 7
4.2 Prohibited Materials 7
4.3 Special Requirements 7
4.4 Storage of Special Materials prior to work 7

5 Fabrication 7

5.1 Welding 7
5.2 Assembly 8
5.3 Heat Treatment 8
5.4 Other Processes (as required) 8

6 Tests and Inspections 8

6.1 Personnel Qualifications 8
6.2 Non-Destructive Examinations 8

6.3 Shop Tests 8
6.4 Site Tests 8
7 Preparation for Shipment 9
7.1 Cleanliness 9
7.2 Painting 9
7.3 Tagging 9
7.4 Packaging and Shipping Instructions 9
8 Quality Assurance 9
8.1 QA Requirements Specific to Item(s) or Service 9
8.2 Program QA elements 9
9 Configuration Management 9
10 Documentation and Submittals 10
10.1 General 10
10.2 Submittals 10

1 Scope

1.1 Project Description and Location

The River Protection Project-Waste Treatment and Immobilization Plant (WTP) is a complex of waste treatment facilities where the US Department of Energy (DOE) Hanford Site tank waste will be put into stable glass form. The WTP Contractor will design, build and start-up the WTP pretreatment and vitrification facilities for the DOE Office of River Protection (ORP). The waste treatment facilities will pretreat and immobilize the low-activity waste (LAW) and high-level waste (HLW) currently stored in underground storage tanks at the Hanford Site.

The Hanford Site occupies an area of about 560 square miles and is located along the Columbia River, north of the city of Richland, Washington. The WTP Facility will be constructed at the east-end of the 200 East Area of the Hanford Site. The counties of Benton, Franklin, and Grant surround the Hanford Site.

1.2 Equipment, Material, and Services Required

Design, furnish materials, fabricate, assemble, test and deliver sealless centrifugal pumps and accessories in accordance with this specification, including:

1.2.1 Sealless Centrifugal pumps, each complete with electric motor and accessories specified on the individual Pump Data Sheets for API 685, 1st Edition and individual Motor Data Sheets, if provided.

1.2.2 Stainless steel shim packs shall be furnished for each foot mounting position for each pump and driver. The shims shall be cut and slotted to match each support baseplate. Each shim pack shall contain:

1 each SS shim 0.250" in thickness
2 each SS shim 0.125" in thickness
2 each SS shim 0.0625" in thickness
2 each SS shim 0.040" in thickness
2 each SS shim 0.010" in thickness
2 each SS shim 0.005" in thickness

1.2.3 Services of an installation supervisor when required.

1.2.4 Sets of all special tools required for installation and maintenance. The order will specify the quantity of tool sets to be furnished.

1.2.5 One lot of consumable spare parts per item for start up and one year operation.

1.2.6 Each pump, motor and baseplate assembly shall include all components and accessories fully assembled, piped and wired, requiring only setting on the foundation and connecting to the Buyer's piping, electrical and control systems.

1.2.7 The Seller shall advise recommended openings in start-up strainers for each pump application.

1.3 Work by Others

1.3.1 Material unloading and storage at jobsite

1.3.2 Installation labor

1.3.3 Foundation and anchor bolts

1.3.4 Interconnecting pipework external to unit

1.3.5 Electric power supply and connection

1.3.6 Wiring external to pump and driver

1.3.7 Motor starters

1.4 Definitions and Acronyms

1.4.1 Definitions – See API-685:

1.4.2 Acronyms of Organizations

ABMA	American Bearing Manufacturers Association
AGMA	American Gear Manufacturers Association
ANSI	American National Standards Institute
API	American Petroleum Institute
ASME	American Society of Mechanical Engineers
ASNT	American Society for Nondestructive Testing
ASTM	American Society for Testing and Materials
HI	Hydraulic Institute
ISO	International Organization for Standardization
NEMA	National Electrical Manufacturers Association
NFPA	National Fire Protection Association

1.4.3 Other Acronyms

BPVC	Boiler and Pressure Vessel Code (ASME)
CFR	Code of Federal Regulations

1.5 Quality/Seismic Classifications

Quality Level and Seismic Category of each pump described in this specification will be on the individual Pump Data Sheets.

2 Applicable Documents

2.1 General

2.1.1 Work shall be done in accordance with the referenced codes, standards, and documents listed below, which are an integral part of this specification.

2.1.2 When specific chapters, sections, parts, or paragraphs are listed following a code, industry standard, or reference document, only those chapters, sections, parts, or paragraphs of the document are applicable and shall be applied. If a date or revision is not listed, the latest issue, including addenda, at the time of Request for Quote (RFQ) shall apply. When more than one code, standard, or referenced document covers the same topic, the requirements for all must be met with the most stringent governing.

2.2 Codes and Industry Standards

Includes but not limited to:

2.2.1 API Std. 685, 1st Ed. - *Sealless Centrifugal Pumps for Petroleum, Heavy Duty Chemical, and Gas Industry Services*

2.2.2 ASNT SNT-TC-1A - *Personnel Qualification and Certification in Nondestructive Testing*

2.3 Engineering Specifications

2.3.1 24590-WTP-3PS-G000-T0001, *General Specification for Supplier Quality Assurance Program Requirements*

2.3.2 24590-WTP-3PS-G000-TP002, *Specification for Positive Material Identification (PMI)*

2.3.3 24590-WTP-3PS-G000-T0003, *General Specification for Packaging, Shipping, Handling and Storage Requirements*

2.3.4 24590-WTP-3PS-MUMI-T0001, *Specification for Medium Voltage Induction Motors*

2.3.5 24590-WTP-3PS-MUMI-T0002, *Specification for Low Voltage Induction Motors*

2.3.6 24590-WTP-3PS-EVV1-T0001, *Specification for Low Voltage Adjustable Speed Drives*

2.3.7 24590-WTP-3PS-SS90-T0001, *Specification for Seismic Qualification of Seismic Category I/II Equipment and Tanks*

3 Design Requirements

3.1 Basic Function

3.1.1 These centrifugal pumps will move liquids to/from/between locations that require a QL-1 or QL-2 pump.

3.1.2 The pumps may be located in "hot cells" which will require remote maintenance and handling design features. (See the individual Pump Data Sheets.)

3.2 Performance

See the individual Pump Data Sheets.

3.3 Design Conditions

3.3.1 See the individual Pump Data Sheets.

3.3.2 The equipment and appurtenances will be used in a plant that has a nominal design life of 40 years. The design objective for these centrifugal pumps shall be based on a useful life expectancy of 40 years with periodic maintenance as recommended by the Seller.

3.3.3 This (Bechtel WTP) specification covers the minimum requirements for sealless centrifugal pumps designed in accordance with API Standard 685, First Edition, *Sealless Centrifugal Pumps for Petroleum, Heavy Duty Chemical, and Gas Industry Services* as modified by this section. Bulleted items in API 685 not addressed in this specification shall have the decisions noted on the individual Pump Data Sheets.

The term "Seller" in this specification is equivalent to "Vendor" in API 685. The term "Buyer" in this specification is equivalent to "Purchaser" in API 685.

API 685 Paragraph Numbers

The paragraph numbers in this section correspond to those in API 685 and each of the paragraphs denotes an "Addition", "Decision", or "Modification" to the API requirements.

2.2 (Decision) Pumps shall comply with applicable US Standards unless a Code or Standard specified dictates otherwise. (See modification of API Paragraph 5.4, Conflicting Requirements.)

5.1 (Decision) Dimensions shall be US Standard.

5.4 (Modification) Conflicting Requirements

In case of conflict between this specification and other referenced documents, Buyer shall be notified. If no resolution, the following order of precedence shall govern:

- Purchase Order
- Data Sheets
- This Specification
- API 685
- Other referenced specifications and standards

6.1.1 (Modification) Design service life is 40 years. See Paragraph 3.3.2 of this (Bechtel WTP) specification.

6.1.10 (Decision) Pump Suction Specific Speed (S) shall not exceed 12,000 (calculated using rotative speed in rev/min, BEP flow at the maximum diameter impeller in GPM and NPSH in feet). Pumps offered with suction specific speeds >12,000 may be accepted subject to the Buyer's written acceptance.

6.1.12 (Addition) Pumps for parallel operation shall have equal head rise (within ± 1 % as measured on the performance test) to shutoff.

6.1.15 (Addition) Noise level shall not exceed 85 dBA measured 3 ft from the edge of the baseplate.

6.1.29 (Decision) Pumps and auxiliaries shall be suitable for outdoor installation in the climatic zone specified on the data sheets, but will be normally located indoors.

6.4.3.6 (Decision) Pressure gauge connections shall not be provided.

6.4.3.8.3 (Decision) Cylindrical threads shall not be used.

6.4.3.9 (New) Unless otherwise specified on individual Pump Data Sheets, casings shall be provided with flanged vents and drains. Flanges shall have the same rating as the pump discharge nozzle.

6.7.4.1 (Addition) The wear ring running clearance (adjusted for temperature) and diameter, shall be clearly stated in the proposal for each service. Pump efficiencies shall be based on the corrected clearances.

8.3.2.1a (Modification) Special-design pumps, as approved by the Buyer, may be segmentally tested at the appropriate section pressure. Hydrostatic testing, whether on a component basis or assembled pump, shall be done after all machining and welding (such as piping connections, drain, vents, seal welding) have been completed.

8.3.3.2.3 (Modification) Bearing temperatures shall be measured at all five points of the performance test.

8.3.4.1 (Addition) NPSHR test shall be performed if the NPSH required by the pump differs from the specified available NPSH by 3 feet or less. The NPSH test will be a vacuum tank suppression test unless a suction valve throttling test has been approved by the Buyer.

9.1.5.2.10 (Addition) If non-sparking coupling guards are required, they shall be specified on the Data Sheets.

9.1.5.3.3 (Addition) Centers of mounting pads shall be at the correct relative elevation with 0.002 inch per foot of separation between the pads. Each pad shall be machined flat to within 0.002 inch total variation across the surfaces.

9.1.5.3.4 (Addition) Stainless steel shim packs shall be furnished for each foot mounting position for each pump and driver. The shims shall be cut and slotted to match each support

baseplate. Each shim pack shall contain shims as specified in Paragraph 1.2.2 of this (Bechtel WTP) specification.

9.1.5.3.21 (New) To insure that final alignment can be achieved in the field, the equipment manufacturer shall align the pump and driver to within 0.010 inch parallel offset and 0.002 inch/inch angular in the shop. The bolts shall be centered in their holes after the preliminary alignment. Undercutting of hold-down bolts is not acceptable.

Note: Hold down bolts shall not be bolt bound after final alignment in the field. The hold-down bolt shall be reasonably centered, based on visual inspection after the final field alignment.

Section 10 Seller's Data: The requirements of Section 3 of the Material Requisition shall be applicable in addition to the API 685 requirements.

End of Comments to API 685

3.4 Environmental Conditions

3.4.1 See individual Pump Data Sheets.

3.4.2 When noted on the Data Sheets, motors shall have radiation shielding or radiation hardened motors, as specified. The shielding shall be furnished by the motor Seller with consideration for motor cooling air flow.

3.4.3 When noted on the Data Sheets, all bearings shall have special radiation resistant lubricants.

3.4.4 When noted on the Data Sheets, the seal elastomer components shall use high radiation-tolerance materials.

3.5 Mechanical Requirements

See API 685 and the individual Pump Data Sheets.

3.6 Loadings

3.6.1 Must meet API 685 requirements.

3.6.2 See the individual Pump Data Sheets for Seismic Classification.

3.7 Electrical Requirements

3.7.1 See the individual Motor Data Sheets, if provided, otherwise the individual Pump Data Sheets.

3.7.2 Electric motors shall meet the requirements of Project Specifications 24590-WTP-3PS-MUMI-T0001 or 24590-WTP-3PS-MUMI-T0002 for Induction Motors.

3.7.3 Adjustable Speed Drives shall be in accordance with Project Specification 24590-WTP-3PS-EVV1-T0001, for Low Voltage Adjustable Speed Drives.

3.8 Instrumentation and Control Requirements

3.8.1 See the individual Pump Data Sheets.

3.9 Remote Handling Requirements

3.9.1 When Remote Handling capability is required per the individual Pump Data Sheet and/or in Section 2 of the Material Requisition, Technical Notes, detailed specifications and drawings of the Remote Handling requirements will be included. Pumps shall be furnished with Remote Handling provisions in accordance with Project requirements.

3.9.2 Detailed drawings of modifications for Remote Handling shall be furnished for Buyer review prior to the start of work.

4 Materials

4.1 Construction

See the individual Pump Data Sheets and, if provided, the individual Motor Data Sheets.

4.2 Prohibited Materials

4.2.1 Bronze, copper, lead, zinc, tin, antimony, cadmium, or other low melting point metals, their alloys, or molybdenum and halogens, shall not be used in direct contact with stainless steel, with the exception of bronze bearings. This prohibition applies to the use of tools, fixtures, paints, coatings and sealing compounds, and any other equipment or materials used by the Seller in handling, assembly and storage of stainless steel parts or components.

4.2.2 The use of Teflon seals is prohibited.

4.2.3 The use of asbestos is prohibited.

4.3 Special Requirements

See the individual Pump Data Sheets and, if provided, the individual Motor Data Sheets.

4.4 Storage of Special Materials prior to work

The Seller shall advise any special storage requirements.

5 Fabrication

5.1 Welding

5.1.1 Welding and weld repairs shall follow the requirements of API 685 and other referenced codes and standards as applicable.

5.1.2 Weld repair records shall be included with the document package.

5.2 Assembly

Where possible, the pump, motor, and baseplate assemblies shall be shipped as a complete package. When this is not possible, Seller shall advise Buyer in advance.

5.3 Heat Treatment

Heat treatment shall be conducted as required by Seller, API 685 and other referenced codes and standards.

5.4 Other Processes (as required)

Positive Material Identification is required for pressure retaining casings per Engineering Specification 24590-WTP-3PS-G000-TP002.

6 Tests and Inspections

6.1 Personnel Qualifications

Qualification of Seller's inspection and test personnel will be verified by the Buyer's Supplier Quality Representative.

6.2 Non-Destructive Examinations

Personnel performing non-destructive examinations or reviewing such test results shall be certified to ASNT Standard SNT-TC-1A.

6.3 Shop Tests

6.3.1 Seller shall conduct and be responsible for all shop tests listed in the individual Pump Data Sheets, the individual Motor Data Sheet (if provided), API 685 and other applicable standards and reference documents. Tests may be witnessed by the Buyer's Supplier Quality Representative.

6.3.2 Seller shall furnish all facilities necessary for the performance of such tests. In the event Seller's own facilities are not suitable for such tests, Seller shall advise Buyer and obtain advanced written permission for using alternative facilities. This shall include testing to verify remote handling requirements, if specified.

6.4 Site Tests

Buyer's startup personnel will run field performance tests after installation. Buyer may request Seller's assistance during startup.

7 Preparation for Shipment

7.1 Cleanliness

All dirt, oil, grease, loose mill scale, weld spatter and other foreign matter shall be removed from all surfaces per API 685 and Engineering Specifications 24590-WTP-3PS-G000-T0003.

7.2 Painting

After visual examination, all exposed surfaces shall be primed and coated in accordance with Seller's standard procedures and API 685. Seller shall submit their conforming procedures as part of the documentation package. Color, if specified, shall be advised later.

7.3 Tagging

Tagging shall be per Paragraph 6.15 of API 685.

7.4 Packaging and Shipping Instructions

7.4.1 All equipment shall be packed, securely anchored and protected for shipment in accordance with Engineering Specification 24590-WTP-3PS-G000-T0003. Pumps, drive motors and all furnished auxiliaries shall be shipped fully assembled on their specific baseplates. Non-mounted drivers, if approved by Buyer, shall be shipped along with the main assembly.

7.4.2 Special applications requiring different shipping instructions shall be mutually agreed by Buyer and Seller.

8 Quality Assurance

8.1 QA Requirements Specific to Item(s) or Service

8.1.1 The Supplier Quality Assurance Program (QAP) requirements are included in Engineering Specification 24590-WTP-3PS-G000-T0001.

8.1.2 Seller's QAP Manual shall be submitted to Buyer for review in accordance with Engineering Specification 24590-WTP-3PS-G000-T0001.

8.2 Program QA elements

Seller's QAP, as a minimum, shall contain the requirements detailed in the Supplier Quality Assurance Program Requirements Data Sheets listed in Section 2 of the Material Requisition.

9 Configuration Management

Equipment and/or components covered by this specification are identified with Plant Item (equipment tag) numbers as given in the individual Data Sheets. Each item shall be tagged per Section 7.3.

10 Documentation and Submittals

10.1 General

10.1.1 Submittals and document quantities, including Drawings, Installation Procedures, Inspection and Test Reports, Calculations, Manuals, Certificates of Conformance, Schedules, Material Certificates, and others appropriate to the purchased equipment, are detailed in Section 3 of the Material Requisition, including Forms G-321-E and G-321-V, and Section 10.3 of API 685.

10.1.2 The documents and data shall include information listed in the Descriptions in Appendix O of API 685.

10.2 Submittals

10.2.1 Drawings shall satisfy Section 3 of the Material Requisition, and Section 10.3 of API 685.

10.2.2 Priced recommended spare parts lists for start-up and one (1) year's operation along with complete lists of equipment parts with drawings showing assembly locations shall be provided, per Paragraph 10.3.5 of API 685. Seller shall identify limits to shelf-life and storage requirements of parts anticipated to have functional life spans shorter than the equipment design life.

10.2.3 Inspection and Test Reports shall be provided in accordance with Sections 3 and 5 of the Material Requisition, and Appendix O of API 685.

10.2.4 Forces and Moments capabilities, as a minimum, shall meet requirements of Paragraph 6.5 of API 685. Calculations, if specified, shall be furnished.

10.2.5 Manuals shall be furnished to provide information on the correct installation, operation and maintenance of the equipment assembly. The manuals shall be as described in Appendix O of API 685.

10.2.6 Manufacturing schedules and progress reports shall be furnished and sent directly to the Project Expeditor as shown in Section 3 of the Material Requisition.

R10284802

BECHTEL

ISSUED BY
RPP-WTP PDC
DATE

RIVER PROTECTION PROJECT – WASTE TREATMENT PLANT

ENGINEERING SPECIFICATION

FOR

Vessel-Mounted Vertical Transfer Pumps - LAW Facility

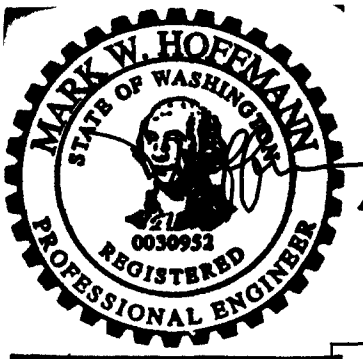

4/15/04

This bound document contains a total of 35 sheets

Content applicable to ALARA? ☒ Yes ☐ No

EXPIRES 12/10/04

Quality Designator

CM

ADR No. N/A **Rev**

DIM No. **Rev**

DOE Contract No.
DE-AC27-01RV14136

NOTE: Contents of this document are Dangerous Waste Permit affecting.

REV	DATE	REASON FOR REVISION	BY	CHECK	REVIEW	QA	APEM/DEM
0	4/15/04	Issued for Permitting Use				N/A	

SPECIFICATION No. 24590-WTP-3PS-MPC0-TP008 **Rev** 0

Best Available Copy

Notice

Please note that source, special nuclear, and byproduct materials, as defined in the Atomic Energy Act of 1954 (AEA), are regulated at the US Department of Energy (DOE) facilities exclusively by DOE acting pursuant to its AEA authority. DOE asserts that, pursuant to the AEA, it has sole and exclusive responsibility and authority to regulate source, special nuclear, and byproduct materials at DOE-owned nuclear facilities. Information contained herein on radionuclides is provided for process description purposes only.

Contents

1 Scope 5
1.1 Project Description and Location 5
1.2 Scope Covered by this Specification 5
1.3 Scope Not Covered by this Specification 5
1.4 Definitions 5
2 Applicable Documents 6
2.1 General 6
2.2 Industry Standards 6
2.3 Safety/Quality/Seismic Classifications 7
2.4 Engineering Specifications 7
2.5 Reference Documents and Drawings 7
3 Design Requirements 8
3.1 General 8
3.2 Design Conditions 8
3.3 Conditions of Service 8
3.4 Environmental Conditions 9
3.5 Pump Construction 9
3.6 Operational and Design Requirements 13
3.7 Drivers 13
3.8 Seismic Requirements 14
3.9 Accessibility and Maintenance 14
4 Materials 15
4.1 General 15
4.2 Positive Material Identification 15
4.3 Prohibited Materials 15
5 Fabrication 16
5.1 General 16
5.2 Welding Procedures 16
5.3 Repairs 16
5.4 Painting, Surface Preparation, and Cleaning 16
6 Inspection and Testing 16
6.1 General 16
6.2 Hydrostatic Tests 16
6.3 Performance Tests 17

6.4 Final Dimensional Checks - Semi-Remote Vertical Pumps 18
6.5 Plumb Lift Test 18
7 Shipping, Handling, and Storage 18
7.1 General 18
7.2 Tagging 18
8 Quality Assurance 19
8.1 CM Quality Designation - QA Requirements Specific to LAW Items or Service 19
8.2 Seller Deviation 19
9 Configuration Management 19
10 Documentation and Submittals 19
10.1 General 19
10.2 Submittals 19

Figure

Figure 1 LAW Semi-Remote Vessel-Mounted Vertical Transfer Pumps 23

Appendices

Appendix A Pump Operation Summary ..... A-i
Appendix B Pump Design Parameter Summary ..... B-i
Appendix C Connectors ..... C-i
Appendix D Final Dimensional Measurements of Pumps by Seller ..... D-i

Please note that source, special nuclear and byproduct materials, as defined in the Atomic Energy Act of 1954 (AEA), are regulated at the U.S. Department of Energy (DOE) facilities exclusively by DOE acting pursuant to its AEA authority. DOE asserts that pursuant to the AEA, it has sole and exclusive responsibility and authority to regulate source, special nuclear, and byproduct materials at DOE-owned nuclear facilities. Information contained herein on radionuclides is provided for process description purposes only.

1 Scope

1.1 Project Description and Location

The River Protection Project - Waste Treatment Plant (WTP) is a complex of waste treatment facilities where the US Department of Energy's (DOE) Hanford Site tank waste will be put into stable glass form. The WTP contractor will design, build, and start up the WTP pretreatment and vitrification facilities for the DOE Office of River Protection (ORP). The waste treatment facilities will pretreat and immobilize the low-activity waste (LAW) and high level waste (HLW) at the Hanford Site. This specification covers only LAW Facility equipment.

The Hanford Site occupies an area of about 560 square miles along the Columbia River, north of the city of Richland, Washington. The WTP facility will be constructed at the east end of the 200 East Area of the Hanford Site. Benton, Franklin, and Grant counties surround the Hanford Site.

1.2 Scope Covered by this Specification

Design, furnish materials, fabricate, package, test and preparation for shipment of complete pump units and appurtenances in accordance with this specification, including the following:

1.2.1 Semi-remote vessel-mounted vertical transfer pumps, complete with motors, wiring and conduit, lifting lugs, eductor primer (if required), nozzle connections, all required piping from pump to nozzle connections, acquisition services documents, and attachments.

1.2.2 Special tools required for installation and maintenance.

1.2.3 Deleted

1.2.4 Operations and maintenance manuals.

1.2.5 Lifting yokes designed to dimensions and configurations supplied by the Buyer.

1.3 Scope Not Covered by this Specification

1.3.1 Pump mounting flange bolt fasteners.

1.3.2 Semi-remote water, slurry, and power jumpers or instrumentation beyond first connection to factory assembled package.

1.3.3 Material unloading, unpacking, inspection, storage and installation labor at the job site.

1.4 Definitions

The equipment covered by this specification will be used in the WTP, where the definitions of terms are:

Cantilevered	Refers to a specific pump configuration where the bearings supporting the rotating pump shaft are positioned at one end of the shaft, leaving the remainder of the shaft unsupported.
Casing	Refers to the volute casing or the bowl assembly, depending on the pump used for these applications.
LAW	Refers to items associated with the Low Activity Waste (LAW) building.
Self-Priming	Refers to the process condition where the impeller will always be in fluid during pumping and the pumps for this application will be of the extended line-shaft bearing type
Semi-Remote	Equipment described as semi-remote in this specification refers to equipment located in the radioactive LAW cell that will normally be accessed from overhead protected levels and minimal human contact.
Vertical Pumps	Refers to equipment that is the subject of this specification, the semi-remote vessel-mounted vertical transfer pumps.

2 Applicable Documents

2.1 General

2.1.1 Work shall be performed in accordance with the referenced codes, standards, and documents listed below, which are an integral part of this specification, and to the extent referenced herein.

2.1.2 When specific chapters, sections, parts, or paragraphs are listed following a code, industry standard, or reference document, only those chapters, sections, parts, or paragraphs of the document are applicable and shall be applied. If a date or revision is not listed, the latest issue, including addenda, at the time of Request for Proposal (RFP) shall apply. When more than one code, standard, or referenced document covers the same topic, the requirements for all must be met with the most stringent governing.

2.1.3 "Seller Surveillance Inspection" is defined in section 5 of the material requisition. Critical steps in manufacturing and testing, such as witness points and hold points, are also defined in section 5 of the material requisition.

2.2 Industry Standards

Unless otherwise specified herein or on drawings, work under this specification shall be performed in accordance with the codes, standards, and publications to the extent indicated by the references herein. The date of issue (or revision) indicated shall apply.

Sponsor	Number	Subject

ABMA	Std. 7	American Bearing Manufacturers Association - Shaft and Housing Fits for Metric Radial Ball and Roller Bearings
ABMA	Std. 9	American Bearing Manufacturers Association - Load Ratings and Fatigue Life for Ball Bearings
ABMA	Std. 20	American Bearing Manufacturers Association - Radial Bearings of Ball, Cylindrical Roller, and Spherical Roller Types Metric Design
ASME BPVC	Sec. IX	American Society of Mechanical Engineers - Qualification Standard for Welding and Brazing Procedures, Welders, Brazers, and Welding and Brazing Operators
ASME/ANSI	Y14.5M	American Society of Mechanical Engineers - Dimensioning and Tolerancing
ASTM	A276	American Society for Testing and Materials - Specification for Stainless Steel Bars and Shapes
ASTM	A802	American Society for Testing and Materials - Standard Practice for Steel Castings, Surface Acceptance Standards, Visual Examination
HI	HI2.6, 2000	Hydraulic Institute Standards-American National Standard for Vertical Pump Tests
NEMA	MG-1	National Electrical Manufacturers Association - Motors and Generators

2.3 Safety/Quality/Seismic Classifications

Safety class, quality level, and seismic category of vertical pumps described in this specification are noted in the individual vertical pump data sheets issued with the material requisition.

2.4 Engineering Specifications

See section 2 of the material requisition for the referencing of engineering specifications.

2.5 Reference Documents and Drawings

See Figure 1 for LAW pump configuration.

3 Design Requirements

3.1 General

The Seller shall control the quality of items and services to ensure that the requirements of this specification, applicable codes and standards, material requisitions, motor and vertical pump data sheets, and other acquisition services documents are met.

3.2 Design Conditions

3.2.1 The equipment and appurtenances will be used in a plant that has a design life of 40 years. Vertical pumps shall be designed for a minimum service life of 20 years when subjected to normal periodic maintenance.

3.2.2 Pumps are generally categorized as semi-remote (as defined in section 1.4), depending on conditions of service as described in this section.

3.2.3 Plant location and environmental conditions are indicated on individual motor and vertical pump data sheets and other attachments to the material requisitions.

3.2.4 To simplify maintenance and spare parts inventory, it is desirable to have two semi-remote pump configurations for the LAW facility (one for cantilever and one for self-priming – described later in this section) for all service conditions shown in the vertical pump data sheets attached to the material requisitions. If one pump configuration for each category is not possible, the Seller shall minimize the number of pump configurations as much as possible. For general configurations see Figure 1 for LAW services.

3.2.5 The semi-remote LAW vertical pumps shall be designed for an exposure life of not less than five years at the specified conditions. Normal maintenance items shall be included, such as bearings, packing, seals, and gaskets, which, due to the semi-remote radioactive environment, shall function with no maintenance required within that period.

3.3 Conditions of Service

3.3.1 Semi-Remote Vertical Pumps

Vertical pumps shall be located in the LAW facility and exposed to a radioactive environment with expected radiation rates as follows.

Operating Dose Rates

Location	
At vessel top mounting flange	0.50 rads/hr
At center of vessel	1.00 rads/hr

Maximum Cumulative Yearly Dose

Location	
At vessel top mounting flange	4.38×10^3 rads

At center of vessel	8.76×10^3 rads

Note: These values are subject to change. Seller shall verify expected radiation levels with Buyer before commencing design.

3.4 Environmental Conditions

3.4.1 The vertical pumps will be located indoors in rooms maintained between 59 °F dry bulb minimum and 113 °F dry bulb maximum temperature during normal operation.

3.4.2 Vertical pumps and components shall not be stored outdoors.

3.5 Pump Construction

3.5.1 General

The vertical pumps are characterized into various groups and classifications for the purposes of design and construction. The following summary outlines the primary classifications, as defined in this specification.

Location	Quality Level	Access	Preferred Design
LAW	CM	Semi-remote	Cantilever
LAW	CM	Semi-remote	Self-priming

Notes:
Quality levels are detailed in section 8.
Semi-remote is defined in section 1.4.
Preferred pump designs are discussed further in the following sections.

3.5.2 Pump Preferred Design Definitions:

3.5.2.1 Cantilever Pumps

Pumps designated as cantilever pumps are defined for the purposes of this specification as pumps with a shaft and impeller that extends below the radial bearing (located above the mounting flange). Cantilever pumps shall have suction tailpipe and eductor priming assemblies. Cantilever pumps shall not have any bearings located within the interior volume of the vessel. See Appendix B, Pump Design Parameter Summary for individual pump designations.

3.5.2.2 Self-Priming Pumps

Self-priming pumps are defined, for the purposes of this specification, as pumps that have the capability of starting from a low liquid level without the use of a priming eductor or any other external priming fluid. For all self-priming pumps, no external fluid, other than the main process stream, shall be added to the vessel or discharge piping for any purpose including priming or bearing lubrication (see section 3.5.4.4.3 for an exception for pumps using an extended line-shaft bearing configuration). See Appendix B, Pump Design Parameter Summary, for individual pump designations.

3.5.3 Design parameters are given on the vertical pump data sheets included in the material requisition. Additional parameters for pumps in slurry service are shown in Appendix B.

Important: Seller shall propose designs for all pumps considering vessel nozzle diameters as listed in Appendix B.

3.5.3.1 A pump lifting assembly shall be designed and fabricated by Seller to dimensions and configuration supplied by Buyer, with two lifting lugs located as shown in Figure 1. These lifting lugs will facilitate a two-point lift by a compatible lift yoke that is in turn lifted by a single main crane hook. Lifting lugs shall be designed to lift 1.5 times the total dry pump weight and shall provide a straight plumb lift of a fully equipped dry pump.

3.5.3.2 A plumb lift test as well as a load test for 1.5 times the normal dry load shall be demonstrated on each unit in the Seller's shop, with Buyer to witness (see section 6.5). The pump shall be lifted off the shop floor and held for 10 minutes. Inspections shall be performed for any deformation or stress cracking at the lifting lugs and at the lifting lugs' attachments or reinforcements to the pump. Buyer will review design calculations related to lifting assembly design.

3.5.4 Semi-Remote Vertical Pumps LAW

3.5.4.1 Semi-remote vertical pumps in the LAW building shall be designed in accordance with CM quality designation requirements as detailed in section 8.1.

3.5.4.2 The LAW pumps are designated as either cantilever or self-priming as defined in section 3.5.2.

3.5.4.3 LAW Pumps - Cantilever

3.5.4.3.1 The preferred design for the LAW pumps designated as cantilever shall be as defined in section 3.5.2. Figure 1, LAW Semi-Remote Vessel-Mounted Vertical Transfer Pumps, illustrates the pump setting and vessel configuration with nominal and critical pump dimensions.

3.5.4.3.2 If the Seller proposes a design other than that described herein, the Seller shall include documentation of two or more successful applications, with contact information, in similar radioactive slurry service for the Buyer to review. Other pump designs may include any design with bearings located below the mounting flange and within the interior volume of the vessel such as vertical line-shaft pumps, submersible canned pumps, or any pump that differs fundamentally from a standard vertical cantilever and tailpipe design.

3.5.4.3.3 The Seller shall design all cantilevered pump components, including casing, impeller, tailpipe, eductor piping, and discharge piping, with the necessary structural supports to withstand all the operating forces, including those from slurry agitation, without incurring plastic deformation or compromising the structural integrity of the pump. Such forces will be determined and quantified during detailed design.

3.5.4.4 LAW Pumps - Self-Priming

3.5.4.4.1 The preferred design for the LAW pumps designated as self-priming shall be as defined in section 3.5.2, Figure 1. LAW Semi-Remote Vessel-Mounted Vertical Transfer Pumps, illustrates the pump setting and vessel configuration with nominal and critical pump dimensions.

3.5.4.4.2 The Seller shall design all pump components, including casing, impeller, and discharge piping, with the necessary structural supports to withstand all the operating forces, including those from slurry agitation, without incurring plastic deformation or compromising the structural integrity of the pump. Such forces will be determined and quantified during detailed design.

3.5.4.4.3 Self-priming pumps using an extended line-shaft bearing configuration shall be designed with a pressurized support column to protect the shaft assembly from slurry intrusion. The pressurizing media shall be 15 psig of water or inert gas. The Seller shall also provide a method of monitoring the sustained pressure.

3.5.4.5 LAW vertical pumps shall be designed to minimize maintenance personnel radiation exposure time. The number of mounting bolts shall be minimized and designed to allow maintenance personnel to loosen the nuts from above with special wrenches supplied with the equipment. Figure 1 illustrates the desired pump configuration and mounting. Refer to 24590-WTP-3PS-M000-T0002, *General Specification for Mechanical Handling Equipment Design & Manufacture*, for more details on semi-remote handling issues.

3.5.4.6 For LAW application, the main coupling between the drive motor shaft and the vertical pump shaft shall be radiation resistant and shall provide for misalignment (from fabrication and assembly) between the mating shafts at all conditions of service. To simplify pump construction, remote disassembly and re-assembly of coupling is not required for LAW pumps.

3.5.4.7 For LAW application, pumps shall be designed such that the motors can be removed from the pumps and stored in a separate place. Interfacing components on the motor and pump shall have tolerances suitable for motor replacement / interchangeability.

3.5.4.8 For all LAW pumps, the Seller is to provide the process connections (that is, discharge, column fluid pressure, and priming connections) located above the pump mounting flanges with butt-weld ends for use with Hiltap Impact Unions, model HT31U (or equivalent), which will be supplied and fit up by the Buyer.

3.5.5 General Pump Requirements - LAW

3.5.5.1 Pump casings shall be hydrostatically tested in accordance with section 6.2. Castings shall be sound and free from cracks, pits, or nodules in accordance with section 5.1.1. Lined casings are not acceptable.

3.5.5.2 Two or more bearings shall support the vertical rotating pump shaft. In order to improve the stability of the rotating assembly, the bearings shall be preloaded, if necessary, according to bearing size. The load on the thrust bearing shall consist of the sum of the weight of the rotating assembly and the hydraulic thrust and moment from radial thrust and the preload. The load on the radial bearing shall consist of radial components and preload only.

3.5.5.3 All bearings shall be cartridge or standard width, single row radial ball, deep groove (Conrad type) or angular contact type, ABMA (Standard 20) Class 3 Internal Clearance, and selected to give 100,000 hours minimum L_{10} rating life in conformance with ABMA Standard 9.

3.5.5.4 Bearings and bearing seals shall withstand all conditions of service as stated in vertical pump data sheets and in section 3.2.5. Bearing seals shall be designed for the least possible drag on the inner race of the bearing to minimize heat build-up and premature failure. Shaft and housing fits shall be in accordance with ABMA Standard 7.

Note: The Seller shall provide in-place re-greasing for the bearings to allow for re-lubrication of the bearings without removing any components of the motor from their installed positions. An in place grease connector would be located on the LAW vertical pumps for semi-remote access. Semi-remote access for LAW re-greasing applications is defined as an accessible, nonradioactive area for plant personnel to apply grease from a shielded platform, located 4 feet to 5 feet directly above the subject pump. It is imperative that the grease connector be located as close to the bearings as possible (that is, 6 inches or less) in order to minimize opportunities for the grease line to clog due to radiation hardening.

3.5.5.5 Bearings shall be lubricated with Chevron SRI Grease 2 (NLGI Grade 2), as detailed in Specification 24590-WTP-3PS-M000-T0002, *General Specification for Mechanical Handling Equipment Design & Manufacture,* or an approved equivalent radiation-resistant grease in an amount determined by bearing manufacturer. If an alternate grease is recommended, all appropriate technical information shall be submitted for Buyer acceptance.

3.5.5.6 Thrust bearings shall provide full load capabilities if the normal rotation direction of the pump is reversed.

3.5.5.7 Shafts of solid construction are preferred and shall be designed to carry their various loadings without exceeding their normal limits of combined stress, taking into account fatigue stress due to change in load or speed. The first lateral critical speed of shafts and impellers shall be at least 20 % above the maximum operating speed.

3.5.5.8 Special attention shall be given to ensure a smooth, even impeller finish, and care shall be taken to ensure uniformity of shape and finish on the vanes and the space between.

3.5.5.9 The bearing frame shall be constructed and bearing centers spaced so that the shaft and impeller assembly will have proper support to be free of harmful vibration.

3.5.5.10 Maximum Allowable Vibration Limits

3.5.5.10.1 Motor, shaft, and impeller vibration amplitude shall not be more than 0.002 inches peak-to-peak, measured normal to pump shaft axis and not more than 10 inches above the impeller centerline, in air at motor speed, filtered to shaft speed.

3.5.5.10.2 The pump vibration amplitude shall not be more than 0.001 inches peak-to-peak, measured on the surface of the lower bearing housing normal to shaft axis, in air at motor speed, filtered to shaft speed.

3.5.5.10.3 The pump casing vibration amplitude shall not be more than 0.003 inches peak-to-peak measured outside the surface of the casing normal to shaft axis, pumping water at the design rate, filtered to shaft speed.

3.5.5.11 Shaft seals shall be installed to restrict air in-flow at the point of pump shaft entry to the vessel. A low pressure, non-lubricated stuffing box packed with Grafoil or approved equivalent split-ring, with a minimum compressed axial pitch length of 4 inches shall be furnished and installed by the Seller. Additionally, the Seller shall provide a temporary identification tag to caution against adjusting the Grafoil seal after delivery by Seller.

3.5.5.12 For cantilever pumps, an installed priming system is required to permit pump startup when vessel fluid level is below the pump casing. The priming system shall be a water eductor type of the general configuration shown on Figure 1 and shall be capable of starting the pump over the full range of conditions shown on the vertical pump data sheets and described in this specification. The priming system shall be able to start the pump from a vessel fluid level of 6 inches or more above the specified tailpipe intake height as shown on Figure 1. Available water pressure at the primer nozzle will be as indicated on vertical pump data sheets. The priming system shall be capable of starting pumps without exceeding the maximum priming liquid volume as stated on the vertical pump data sheets. Priming capabilities will be tested and verified as detailed in section 6.3.5.

3.5.5.13 All pumps shall be provided with a double-bent lock washer to positively secure the pump impeller nut.

3.6 Operational and Design Requirements

3.6.1 The pump head capacity curve (see section 6.3.3) shall be continuously rising from maximum flow to shut-off.

3.6.2 Pump design pressure shall be not less than 25 % above the shut-off head at the specified suction pressure.

3.6.3 The pumps shall operate free of cavitation over the entire range of conditions shown on Appendix B, Pump Design Parameter Summary, and the vertical pump data sheets.

3.6.4 The Seller shall minimize rotational speed of shafts and impellers due to wear considerations and head losses encountered when pumping slurries at high speeds.

3.6.5 Frequency and length of operation for each pump is shown on Appendix A, Pump Operation Summary.

3.6.6 Vertical pumps in slurry service shall be designed to withstand sludge or slurry yield stresses of 300 dynes/cm^2 under normal operation. Startup torque shall be based on two times the normal running torque without priming water.

3.7 Drivers

3.7.1 Motors

3.7.1.1 Drive motors shall conform to the requirements of Specification 24590-WTP-3PS-MUMI-T0002, *Low Voltage Induction Motors*. Adjustable speed drives

shall conform to the requirements of Specification 24590-WTP-3PS-EVV1-T0001, *Engineering Specification for Low Voltage Adjustable Speed Drives.*

3.7.1.2 The Seller shall provide each pump with a totally enclosed fan-cooled (TEFC), washdown rated, chemical-type motor in accordance with the motor and vertical pump data sheets included with the material requisition.

3.7.1.3 Motor rated horsepower shall not be exceeded by any operating condition that can develop with the impellers.

3.7.1.4 Motors intended for use with adjustable speed drives shall be rated for inverter duty, with corresponding adjustable speed drives, as detailed on low voltage induction motor data sheets and adjustable speed drive data sheets, included with this material requisition package, in order to allow for varying rheologies and liquid levels of the slurries being pumped. The Seller will make every effort to minimize the number of sizes and configurations of the motors. A single motor size with variable speed capability for all vertical pumps is preferable. Multiple motor configurations and constant speed motors will be considered if warranted.

3.7.1.5 All motors shall be NEMA design C type (in accordance with NEMA MG-1). The motor shall be the weakest link in a high torque event such that the shaft, impeller blades, and so forth do not fail in any event.

3.7.2 Semi-Remote Service

3.7.2.1 Insulation for semi-remote motors in the LAW radioactive environment shall be radiation resistant to meet conditions of service described in section 3.3.

3.7.2.2 The Seller shall install all required conduit with proper wiring from the motor junction box to the electrical connectors. All electrical components shall be waterproof. Cable shall be radiation resistant for levels shown in section 3.3 (see section 6.3.9).

3.8 Seismic Requirements

3.8.1 The semi-remote vertical pump components, including the mounting plates, shall be designed in accordance with the methods and procedures described in Specification 24590-WTP-3PS-FB01-T0001, *Structural Design Loads for Seismic Category III and IV Equipment and Tanks*, attached to the material requisition.

3.9 Accessibility and Maintenance

3.9.1 The Buyer's layout allows for necessary access and space requirements to facilitate maintenance during normal plant operation or scheduled shutdown.

3.9.2 The Seller's recommended accessibility and maintenance requirements for each piece of equipment shall be included in the Seller's submittal.

3.9.3 For the LAW Facility pumps, frequency of inspection and maintenance intervals shall be in accordance with equipment Seller's recommendations and shall not be less than one year (excluding re-greasing of bearings.)

4 Materials

4.1 General

4.1.1 Pump materials situated above and fastened to the mounting plate (see Figure 1) shall be austenitic stainless steel type 316L. Exceptions will be the pump priming and discharge piping, which will be constructed of the same material as the respective nozzle, and will extend down to the mounting plate. All piping shall be seamless or welded pipe with 100 % radiographic examination.

Note: The Seller may utilize standard materials of construction for the motor, bearings, and coupling components.

All other components (such as piping, nozzle assemblies, lifting assemblies, main shaft seals, nut retainer, and dutchman) shall be 316L stainless steel unless specified otherwise.

The materials of construction of special components not named herein shall be subject to the Buyer's review.

4.1.2 Pump materials below and including the mounting plate, with the exception of those designated as wet-end components (see section 4.1.4), shall be 316L stainless steel. Stainless steel material shall be in accordance with ASTM A276.

4.1.3 The Seller shall identify, on assembly drawings, all materials (including plate, forging, pipe, bolting) by ASTM material designation, class and UNS number, and shall submit material certificates for the Buyer's review and approval.

4.1.4 Wet-end components, which include the impeller, shaft sleeve, casing, and suction disc, shall be as indicated on vertical pump data sheets.

4.1.5 Gasket selection and configuration shall be based on specific application and performance requirements.

4.1.6 Fasteners shall be as shown on Figure 1.

4.2 Positive Material Identification

4.2.1 All pump all pressure containing parts materials shall be in accordance with 24590-WTP-3PS-G000-TP002, *Specification for Positive Material Identification (PMI)*.

4.3 Prohibited Materials

4.3.1 Bronze, copper, lead, zinc, tin, antimony, cadmium, or other low melting point metals, their alloys, or materials containing such metals as their basic constituents or sulfur, and halogens shall not be used in direct contact with stainless steel. This prohibition applies to use of tools, fixtures, paints, coatings and sealing compounds, and any other equipment or materials used by the Seller in handling, assembly, and storage of stainless steel parts or components.

4.3.2 Asbestos, Teflon, and aluminum shall not be used in any component of the vertical pumps.

5 Fabrication

5.1 General

5.1.1 All casting surfaces shall meet severity level-1 visual examination acceptance standards contained in ASTM A-802. Castings shall be free from cracks, tears, voids, or other harmful defects indicative of substandard casting quality.

5.1.2 All vertical pumps shall be neatly finished and free of burrs and fins, and other harmful surface conditions.

5.1.3 Semi-remote vertical pumps shall be designed to minimize crevices that can trap contaminants for ease of decontamination. All surfaces are to be polished smooth (RMS 125 finish). Material hold-up points internal to the pump shall be minimized.

5.2 Welding Procedures

All welding on pump components shall be in accordance with ASME Section IX, *Qualification Standard for Welding and Brazing Procedures, Welders, Brazers, and Welding and Brazing Operators*. The Seller will submit all welding procedures for vertical pumps for review.

5.3 Repairs

The repair welding procedure shall include, as a minimum, the following:

a Type and extent of repairable defects

b Defects removal and nondestructive examination used to ensure complete defect removal

c Weld preparation and treatment, including reference to welding procedures qualified in accordance with ASME Section IX

d Nondestructive examination methods

5.4 Painting, Surface Preparation, and Cleaning

All painting, surface preparation, and cleaning for vertical pumps shall be in accordance with the Seller's standard practices unless superceded by additional requirements by the Buyer during design evaluation stage.

6 Inspection and Testing

6.1 General

The Seller shall supply the Buyer with all test data, certified by the Seller, whether witnessed or not. Pumps shall not be shipped until test data and curves have been reviewed by the Buyer.

6.2 Hydrostatic Tests

6.2.1 Each pressure part of the pump shall be hydrostatically tested at 150% of maximum allowable working pressure (MAWP). Hydrostatic tests shall be maintained for at least 30 minutes.

6.2.2 Before a hydrostatic test procedure is implemented, the Seller shall submit it to the Buyer for review.

6.2.3 Water used in hydrostatic testing shall be of potable quality or better. At no time shall it contain over 50 ppm chlorides.

6.2.4 Systems shall be thoroughly drained and dried by wiping or blotting all accessible areas within 24 hours after testing, rinsing, or flushing operations. Water shall not be left in the system before draining for more than 48 hours.

6.3 Performance Tests

6.3.1 A shop performance test shall be conducted with water on all pumps in accordance with Hydraulic Institute (HI2.6) standards at rated speed over the complete range of flow to maximum capacity to demonstrate fulfillment of efficiency and rating guarantees. Performance tests shall be run using the NPSH available to the pump at the site, including adjustments for all expected liquid levels in vessels (described in this specification and in data sheets) and corrected to shop test conditions.

6.3.2 An NPSH at incipient cavitation test shall be performed in accordance with HI standards on one pump of each type specified. At least three flow points shall be tested as a minimum: design point, run out, and minimum flow. At each point, five or more readings shall be taken at increasingly lowered suction pressure until a 3 % drop in head is noted.

6.3.3 Water test results shall be plotted, showing head, efficiency, and brake horsepower vs. capacity. Water temperatures shall be recorded, and test results corrected to a design average temperature. For pumps in slurry service, in addition to the water head curve above, the Seller shall provide an estimated slurry head curve for comparison. The thickest slurry shown in Appendix B, Pump Design Parameter Summary, shall be used; specifically, the highest yield stress (if non-Newtonian) and highest viscosity shall be used.

6.3.4 Additional shop test results shall be plotted showing the eductor primer flow rate vs. pressure at the primer nozzle with an indication of minimum pressure, flow, and total quantity of priming water required to prime the pump at the low liquid level shown on Figure 1.

6.3.5 Shop test results must verify that all pumps are capable of starting from the minimum liquid level without exceeding the maximum priming liquid volume as listed in the vertical pump data sheets.

6.3.6 Unusual vibration and noise shall be corrected and documented for each test point. The cause of the noise as well as all corrective action taken shall also be noted. Shop tests must verify all pumps operate within maximum allowable vibration limits specified in section 3.5.5.10.

6.3.7 Witness tests shall be run after final trim has been calculated and applied to pumps. No final witness test shall be run without the Buyer's supplier quality representative (SQR) present. A satisfactory full-speed test shall be run at final impeller diameter before the Buyer's representative is called in to observe the test. A preliminary curve and test data shall be submitted to the Buyer's SQR immediately after each test. The amount of acceptable plus tolerance on head, capacity, and horsepower shall be within the range of tolerances suggested by the HI standards.

6.3.8 Shop tests must verify that the first lateral critical speed of all pump shafts and impellers is at least 20% above the maximum operating speed.

6.3.9 During testing, each pump tested shall be fully supplied with electrical power supplied by means of the electrical connectors per approved design (see section 3.7.2.2).

6.3.10 After tentative acceptance by the Buyer's SQR, the pumps may be readied for shipment but shall not be released until acceptance by the Buyer of formal submission of curves and data, which will constitute the performance test report.

6.4 Final Dimensional Checks - Semi-Remote Vertical Pumps

6.4.1 After fabrication and testing, the Seller shall verify the dimensional requirements as given in Figure 1 in accordance with the procedures and precision measuring techniques described in Appendix D.

6.4.2 The Seller shall provide proof that the pump and pump appurtenances are dimensionally correct within the specified tolerances. This shall be accomplished by the completion of dimensional record drawings. These drawings, with details of the critical dimensions added by the Seller, shall be submitted to the Buyer for review prior to shipment.

Note: In addition to pump and pump appurtenances above, as-built shim dimensions of each individual shim required for precision placement of the pump shaft thrust and radial bearings shall be recorded on the dimensional record drawings for each pump.

6.4.3 All final dimensional measurements will be witnessed by the Buyer. No witness tests shall be performed without the Buyer's SQR present.

6.5 Plumb Lift Test

One complete pump of each type shall be tested for single point lift with Seller furnished lift yoke, designed to dimensions and configurations supplied by Buyer, connected to lifting lugs. Variation from vertical shall be 1-inch maximum from plumb. All plumb lift tests will be witnessed by Buyer. No witness tests shall be performed without the Buyer's SQR present.

7 Packaging, Handling, and Storage

7.1 General

Packaging, handling, and storage of the vertical pumps shall be in accordance with 24590-WTP-3PS-G000-T0003, *Engineering Specification for Packaging, Handling and Storage Requirements*.

7.2 Tagging

A stainless steel nameplate shall be attached to each vertical pump showing the manufacturer's name, shop location, date of manufacture, serial number, equipment rating, equipment tag numbers, weight of assembly, and material requisition number. Instruments shall be identified with Buyer-provided tag numbers on stainless steel tags using 1/4 inch tall characters.

8 Quality Assurance

8.1 CM Quality Designation - QA Requirements Specific to LAW Items or Service

8.1.1 The Seller's quality assurance program (QAP) requirements are included in 24590-WTP-3PS-G000-T0001.

8.1.2 The Seller's QAP manual shall be submitted to the Buyer for review in accordance with 24590-WTP-3PS-G000-T0001.

8.1.3 Program QA Elements

The Seller's QAP, as a minimum, shall contain the requirements detailed in the Seller quality assurance program requirements data sheets listed in section 2 of the material requisition.

8.2 Seller Deviation

Each Seller shall be required to identify and promptly document all deviations from the requirements of the acquisition documents. Seller-proposed deviations from acquisition services documents shall be initiated by use of a Seller deviation disposition request (SDDR) form, listed in section 2 of the material requisition and attached thereto. In addition, the Seller shall be required to describe the recommended disposition based on appropriate analysis. Submittals of request for deviations from sub-Sellers shall be through the primary Seller to the Buyer.

9 Configuration Management

Equipment or components covered by this specification are identified with plant item numbers as shown in the motor and vertical pump data sheets. Each item is identified in accordance with section 7.2, Tagging.

10 Documentation and Submittals

10.1 General

The Seller shall submit to the Buyer engineering and quality verification documents in the forms and quantities shown in Form G-321-E, *Engineering Document Requirements*, and Form G-321-V, *Quality Verification Document Requirements*, attached to section 3 of the material requisition.

10.2 Submittals

The Seller shall submit the following:

10.2.1 Drawings

Drawings shall show the following information:

10.2.1.1 The outline dimensions of the vertical pumps, including outline and detail drawings for each major component. These drawings shall reflect the "as-shipped" configuration of the equipment and instrumentation.

10.2.1.2 Details of construction

10.2.1.3 Mounting dimensions and information required for the design of supports and foundations

10.2.1.4 Operating weight of each vertical pump

10.2.1.5 Dynamic loading on mounting flange

10.2.1.6 The space required for the removal of components

10.2.1.7 The weight of individual components

10.2.1.8 The locations and identification of parts that are included in the parts list

10.2.1.9 Wiring, schematic diagrams, and connection. Diagrams shall include wire gauges and fuse sizes applicable to the supplied units only.

10.2.1.10 The ASTM or equivalent designation for materials

10.2.1.11 Nameplate lists

10.2.2 Procedures

Procedures shall include the following:

10.2.2.1 Welding procedures

10.2.2.2 Procedures for repairs of rejected items or parts

10.2.2.3 Electrical component performance test procedures

10.2.2.4 Seller's shipping preparation procedures, including initial startup and checkout procedures, instructions for final alignment checks and any other special instructions prior to initial start-up in facility.

10.2.2.5 Startup, shutdown, and idle procedures

10.2.2.6 Special instruction for installing and maintaining any packing and seals for shafts, bearings, or similar items. Include special instructions for extended (up to 3-years) storage or idle conditions prior to initial start-up in facility.

10.2.2.7 Procedure for all priming operations using an eductor or similar item, including special instructions and sequence for pump startup for all liquid level scenarios

10.2.2.8 For in-place re-greasing (see section 3.5.5.4), the Seller shall submit a full procedure for this re-lubrication process, including all materials needed, proper sequence, special remote crane operator instructions, and instructions for semi-remote access.

10.2.2.9 Seller shall submit a written tolerance control procedure to establish and verify horizontal and vertical centerlines, precise horizontal and vertical measurements, flatness, and datum planes for dimensional measurement of vertical pumps.

10.2.3 Inspection and Test Reports

10.2.3.1 Records of repairs and rejected items or parts

10.2.3.2 Electrical component performance test reports

10.2.3.3 Bench test mechanical performance reports

10.2.4 Calculations

Calculations shall be submitted for the Buyer's review and permission to proceed.

10.2.4.1 Seismic analysis

10.2.4.2 Lifting lug stress analysis

10.2.5 Manuals

Manuals and instructions shall be supplied per the G-321-E form and shall include the following:

10.2.5.1 Erection and installation manuals that provide complete, detailed procedures for installing and placing equipment in initial operation. The manuals shall include all erection and installation drawings. A minimum of five (5) sets of each manual type shall be provided.

10.2.5.2 Operation and maintenance manuals that provide complete, detailed descriptions of components and accessories, including data sheets showing design, construction and performance data for equipment. Manuals shall include drawings required for operation, maintenance and repair, maintenance requirements, instructions, and operational troubleshooting guides. Motor-to-pump alignment criteria shall be provided by the Seller, including any special alignment criteria.

10.2.5.3 Instruction manuals shall cover every item purchased, including materials that the Seller has obtained from a subcontractor. The Seller shall obtain such manuals and lists, and submit them to the Buyer.

10.2.5.4 The Seller shall provide instructions regarding site storage and preparation and protection of equipment after installation and prior to operation.

10.2.6 Certificates of Conformance

10.2.6.1 The Seller shall provide certificates of conformance demonstrating compliance with all applicable standards, specifications, and drawings.

10.2.6.2 The Seller shall certify that lifting eyes or lugs and/or spreader bars are suitable for the safe, balanced lifting and handling of the equipment.

10.2.7 Lists and Schedules

Lists and schedules shall include the following:

10.2.7.1 Schedule of engineering and fabrication

10.2.7.2 Parts list, and cost for parts and items subject to deterioration and replacement

10.2.7.3 List of recommended spare parts

10.2.8 Materials Certificates/Statistics

Material certificates of compliance shall be submitted for components of the vertical pumps. The certificates shall include certified material test reports of chemical and physical properties for all stress components.

10.2.9 Data

Data shall include the following:

10.2.9.1 Buyer's Motor and Vertical Pump Data Sheets, completely filled out by the Seller, showing all information required to determine that the units are of the design and materials specified herein.

10.2.10 Design and Technology Selection Criteria

10.2.10.1 Bearing Grease Selection

If an alternative grease for bearings is recommended other than that specified herein (section 3.5.5.5), all appropriate technical information shall be submitted for Buyer acceptance.

10.2.10.2 Deleted

10.2.11 Material Safety Data Sheets

Material Safety Data Sheets shall be provided for all oils, greases, paints, preservatives, and all other chemicals and chemical products that are shipped with the vertical pumps.

Figure 1 **LAW Semi-Remote Vessel-Mounted Vertical Transfer Pumps**

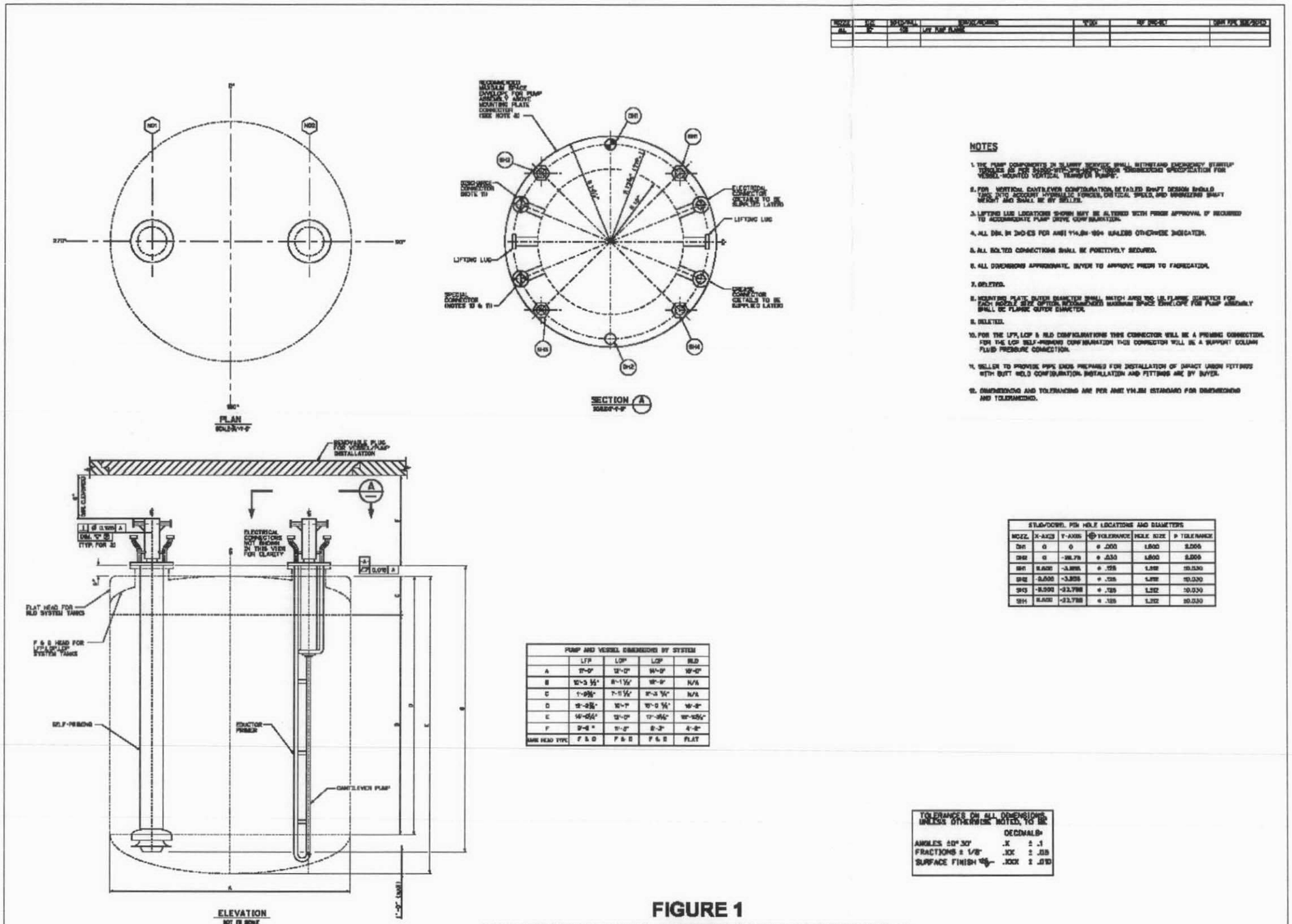

PUMP AND VESSEL DIMENSIONS BY SYSTEM				
	LFP	LOP	LCP	RLD
A	17'-0"	12'-0"	14'-9"	19'-0"
B	10'-3 ½"	8'-1 ½"	10'-9"	N/A
C	1'-9⅝"	1'-11½"	1'-3 ⅞"	N/A
D	12'-2⅝"	10'-1"	10'-0 ⅛"	16'-8"
E	16'-0⅝"	12'-0"	17'-9⅝"	22'-10⅝"
F	2'-6 "	1'-5"	2'-3"	4'-8"
BASE HEAD TYPE	F & D	F & E	F & E	FLAT

STUD/DOWEL PIN HOLE LOCATIONS AND DIAMETERS					
NOZZ.	X-AXIS	Y-AXIS	⌖ TOLERANCE	HOLE SIZE	P TOLERANCE
DN1	0	0	⌀ .000	1.500	0.000
DN2	0	-26.75	⌀ .030	1.500	0.000
SN1	5.500	-3.956	⌀ .125	1.312	±0.030
SN2	5.500	+3.956	⌀ .125	1.312	±0.030
SN3	-5.500	-23.798	⌀ .125	1.312	±0.030
SN4	5.500	+23.798	⌀ .125	1.312	±0.030

TOLERANCES ON ALL DIMENSIONS, UNLESS OTHERWISE NOTED, TO BE:		
	DECIMALS=	
ANGLES ±0° 30'	.X	± .1
FRACTIONS ± 1/8"	.XX	± .03
SURFACE FINISH 125	.XXX	± .010

FIGURE 1

LAW SEMI-REMOTE VESSEL MOUNTED VERTICAL TRANSFER PUMPS

ATTACHMENT TO SPECIFICATION 24590-WTP-3PS-MPC0-T0008

LAW VESSEL MOUNTED VERTICAL TRANSFER PUMPS FOR LFP, LOP, LCP, & RLD SYSTEM

Appendix A

Pump Operation Summary

#	Pump ID#	Vessel Description	Pump Frequency	Pump Duration (SEE NOTE 1)
			[hours between batches]	[minutes]
1	LCP-PMP-00001A	LAW Concentrate Receipt Pump	16	25
2	LCP-PMP-00001B	LAW Concentrate Receipt Pump	16	25
3	LCP-PMP-00002A	LAW Concentrate Receipt Pump	16	25
4	LCP-PMP-00002B	LAW Concentrate Receipt Pump	16	25
5	LFP-PMP-00001A	Melter 1 Feed Preparation Vessel Pump	16	60
6	LFP-PMP-00001B	Melter 1 Feed Preparation Vessel Pump	16	60
7	LFP-PMP-00002	Melter 1 Feed Vessel Pump	As Needed	60
8	LFP-PMP-00003A	Melter 2 Feed Preparation Vessel Pump	16	60
9	LFP-PMP-00003B	Melter 2 Feed Preparation Vessel Pump	16	60
10	LFP-PMP-00004	Melter 2 Feed Vessel Pump	As Needed	60
11	LOP-PMP-00001	SBS Condensate Vessel Pump	24 / Continuous	107 (transfer) / recirc.
12	LOP-PMP-00002	SBS Condensate Vessel Pump	24 / Continuous	107 (transfer) / recirc.
13	LOP-PMP-00004	SBS Condensate Vessel Pump	24 / Continuous	107 (transfer) / recirc.
14	LOP-PMP-00005	SBS Condensate Vessel Pump	24 / Continuous	107 (transfer) / recirc.
15	RLD-PMP-00001A	Plant Wash Vessel Pump	63	91
16	RLD-PMP-00001B	Plant Wash Vessel Pump	63	91
17	RLD-PMP-00003A	SBS Condensate Collection Vessel Pump	43	91
18	RLD-PMP-00003B	SBS Condensate Collection Vessel Pump	43	91

NOTE 1: Finite times shown in this column are for batch transfers only.
All pumps shown as recirc. should be designed for continuous service.
All other pumps should be designed for intermittent service in addition
to transfer durations shown (nom. 30 min. per day)

Appendix B

Pump Design Parameter Summary

#	Bldg	Sys	Pump ID#	Quality Level	Access	Preferred Design	Nozzle Size [in]	Vessel ID#	Vessel Description	Mix Descrip	Mix Nature	If Non-Newt	Yield Stress [dynes/cm^2]		Consistency [cP]			Density [g/cm^3]		Solids Content			Part. Size Dist. [microns]		Chem. Comp
													Max	Min	Max	Design	Min	Max	Min	Total	Dissolved	Undissolved	Max	Average	
1	LAW	LCP	LCP-PMP-00001A	CM	Semi- Remote	Self-priming	20	LCP-VSL-00001	LAW Concentrate Receipt [1]	Homogeneous	Newtonian	N/A	None	None	15	-	0.4	1.47	1	45	45	0	-	15	see sheet 2
2	LAW	LCP	LCP-PMP-00001B	CM	Semi- Remote	Self-priming	20	LCP-VSL-00001	LAW Concentrate Receipt [1]	Homogeneous	Newtonian	N/A	None	None	15	-	1	1.47	1	45	45	0	-	15	see sheet 2
3	LAW	LCP	LCP-PMP-00002A	CM	Semi- Remote	Self-priming	20	LCP-VSL-00002	LAW Concentrate Receipt [2]	Homogeneous	Newtonian	N/A	None	None	15	-	1	1.47	1	45	45	0	-	15	see sheet 2
4	LAW	LCP	LCP-PMP-00002B	CM	Semi- Remote	Self-priming	20	LCP-VSL-00002	LAW Concentrate Receipt [2]	Homogeneous	Newtonian	N/A	None	None	15	-	1	1.47	1	45	45	0	-	15	see sheet 2
5	LAW	LFP	LFP-PMP-00001A	CM	Semi- Remote	Cantilever	20	LFP-VSL-00001	Melter 1 Feed Preparation Vessel	Solid Suspension	Non-Newtonian	Thixotropic	150	0	90	-	0.4	1.83	1.67	63.4	33.4	30	243	48.7	see sheet 2
6	LAW	LFP	LFP-PMP-00001B	CM	Semi- Remote	Cantilever	20	LFP-VSL-00001	Melter 1 Feed Preparation Vessel	Solid Suspension	Non-Newtonian	Thixotropic	150	0	90	-	0.4	1.83	1.67	63.4	33.4	30	243	48.7	see sheet 2
7	LAW	LFP	LFP-PMP-00002	CM	Semi- Remote	Cantilever	20	LFP-VSL-00002	Melter 1 Feed Vessel	Solid Suspension	Non-Newtonian	Thixotropic	150	0	90	-	0.4	1.83	1.67	63.4	33.4	30	243	48.7	see sheet 2
8	LAW	LFP	LFP-PMP-00003A	CM	Semi- Remote	Cantilever	20	LFP-VSL-00003	Melter 2 Feed Preparation Vessel	Solid Suspension	Non-Newtonian	Thixotropic	150	0	90	-	0.4	1.83	1.67	63.4	33.4	30	243	48.7	see sheet 2
9	LAW	LFP	LFP-PMP-00003B	CM	Semi- Remote	Cantilever	20	LFP-VSL-00003	Melter 2 Feed Preparation Vessel	Solid Suspension	Non-Newtonian	Thixotropic	150	0	90	-	0.4	1.83	1.67	63.4	33.4	30	243	48.7	see sheet 2
10	LAW	LFP	LFP-PMP-00004	CM	Semi- Remote	Cantilever	20	LFP-VSL-00004	Melter 2 Feed Vessel	Solid Suspension	Non-Newtonian	Thixotropic	150	0	90	-	0.4	1.83	1.67	63.4	33.4	30	243	48.7	see sheet 2
11	LAW	LOP	LOP-PMP-00001	CM	Semi- Remote	Cantilever	20	LOP-VSL-00001	SBS Condensate Vessel	Homogeneous	Newtonian	N/A	N/A	N/A	-	0.66	-	1.025	-	5	2	3	25	5	<5% solids, N/A
12	LAW	LOP	LOP-PMP-00002	CM	Semi- Remote	Cantilever	20	LOP-VSL-00001	SBS Condensate Vessel	Homogeneous	Newtonian	N/A	N/A	N/A	-	0.66	-	1.025	-	5	2	3	25	5	<5% solids, N/A
13	LAW	LOP	LOP-PMP-00004	CM	Semi- Remote	Cantilever	20	LOP-VSL-00002	SBS Condensate Vessel	Homogeneous	Newtonian	N/A	N/A	N/A	-	0.66	-	1.025	-	5	2	3	25	5	<5% solids, N/A
14	LAW	LOP	LOP-PMP-00005	CM	Semi- Remote	Cantilever	20	LOP-VSL-00002	SBS Condensate Vessel	Homogeneous	Newtonian	N/A	N/A	N/A	-	0.66	-	1.025	-	5	2	3	25	5	<5% solids, N/A
15	LAW	RLD	RLD-PMP-00001A	CM	Semi- Remote	Cantilever	20	RLD-VSL-00003	Plant Wash Vessel	Homogeneous	Newtonian	N/A	N/A	N/A	-	1	-	1.02	1	1	2	-	-	-	<1% solids, N/A
16	LAW	RLD	RLD-PMP-00001B	CM	Semi- Remote	Cantilever	20	RLD-VSL-00003	Plant Wash Vessel	Homogeneous	Newtonian	N/A	N/A	N/A	-	1	-	1.02	1	1	2	-	-	-	<1% solids, N/A
17	LAW	RLD	RLD-PMP-00003A	CM	Semi- Remote	Cantilever	20	RLD-VSL-00005	SBS Condensate Collection Vessel	Homogeneous	Newtonian	N/A	N/A	N/A	-	1	-	1.02	1	5	2	-	-	-	<1% solids, N/A
18	LAW	RLD	RLD-PMP-00003B	CM	Semi- Remote	Cantilever	20	RLD-VSL-00005	SBS Condensate Collection Vessel	Homogeneous	Newtonian	N/A	N/A	N/A	-	1	-	1.02	1	5	2	-	-	-	<1% solids, N/A

Abbreviations for Systems

- **LCP** LAW Concentrate Receipt Process System
- **LFP** LAW Melter Feed Process System
- **LOP** LAW Primary Offgas Process System
- **RLD** LAW Radioactive Liquid Waste Disposal System

IMPORTANT: These values are subject to change.
Information listed here will be updated as design progresses if required.
Seller shall verify values with Buyer before initiating detailed design.
In the event of a discrepancy between values shown here and the data sheets or elsewhere in this Bid package, Seller shall use the most conservative values.

Typical Chemical Composition of Slurries

LAW SLURRY LEGEND:

LCP Refers to pretreated waste for LCP pumps.
LFP-MFPV Refers to Melter Feed for LFP-PMP-00001A/B, and 00003A/B
LFP-GFC Refers to Glass Forming Chemicals for LFP-PMP-00001A/B, and 00003A/B
LFP-MFV Refers to Melter Feed for LFP-PMP-00002, and 00004

Compound	LCP [wt%]	LFP-MFPV [wt%]	LFP-GFC [wt%]	LFP-MFV [wt%]
Al_2O_3	5.6%	5.3%	5.1%	5.3%
B_2O_3	0.6%	5.4%	8.3%	5.4%
Na_2O	41.0%	17.0%	3.8%	17.0%
Fe_2O_3	0.1%	3.7%	5.7%	3.7%
SiO_2	0.4%	33.1%	51.2%	33.1%
SO_3	0.9%	0.3%	0.005%	0.3%
ZrO_2	0.1%	1.5%	2.3%	1.5%
ZnO	0.1%	1.4%	2.1%	1.4%
Other	51.2%	32.3%	21.5%	32.3%

Appendix C

Connectors

Appendix C

Connectors

1.0 General

Drawings and brief descriptions of the types of connectors proposed for the vertical pumps are detailed in section 3. Certain connectors shown here will be supplied by the Buyer, as described in this specification and in Appendix D, and the Seller will be responsible for incorporating the proper interfaces and locations into their final designs. The final selection of connector size and type is subject to change and shall be approved by the Buyer prior to fabrication of the pumps.

2.0 Connector Selection

2.1 Semi-Remote Process Connectors - LAW

The semi-remote process connectors will be Hiltap Impact Unions, model HT31U (or equivalent), which will be supplied and fit up by the Buyer. The Seller is to provide pipe ends for these process connections, prepared with butt-weld ends for use with the above Hiltap Connectors to facilitate maintenance from overhead, semi-remote access (such as welded nuts).

2.2 Semi-Remote Electrical Connectors - LAW

The semi-remote electrical connectors will be standard electrical connections sized appropriately for the specific power applications. Semi-remote electrical connectors shall be supplied by the Seller.

3.0 Connector Technology

General

Figure C3.1 shows an example of the Hiltap Impact Union connector, model HT31U.

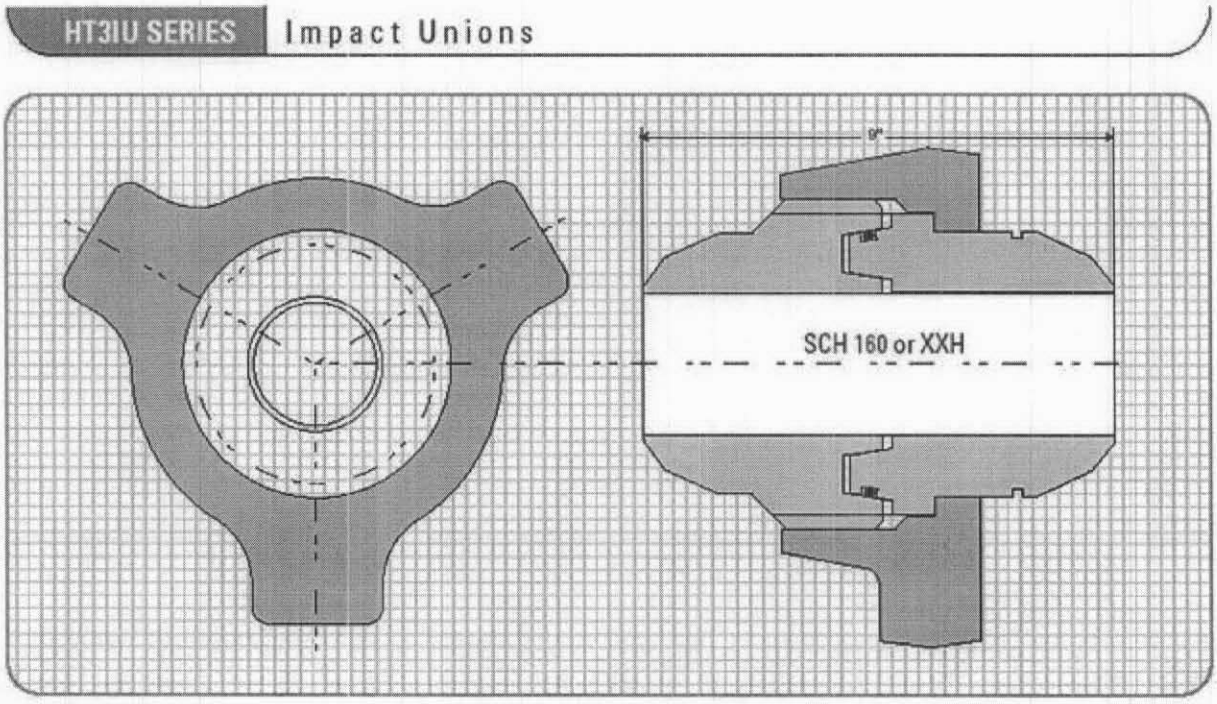

Figure C3.1 - Example of Hiltap Impact Union, Model HT31U

(Note: Material of construction is specified in section 4.0 of this specification)

Appendix D

Final Dimensional Measurements of Pumps by Seller

Appendix D

Final Dimensional Measurements of Pumps by Seller

1.0 Purpose

The Seller will perform dimensional measurements for all vertical pumps, all nozzles, and all appurtenances at the Seller's shop. All as-built dimensions obtained thereby will be recorded as required in Paragraph 6.4.1 of Specification 24590-WTP-3PS-MPC0-TP008. The Seller shall give the Buyer opportunity to witness all final dimensional measurements and review all dimensional records prior to shipment.

2.0 Scope

2.1 Items Included

The Seller shall furnish the following:

- Enclosed and/or partitioned separate temperature controlled area
- Level precision floor surface or surfaces
- Instrument supports, platforms, ladders, stairs, and guardrails
- Overhead crane access
- Lighting
- Facility and support drawings
- Vertical pump support stand
- Lifting yokes, fabricated to dimensions and configurations supplied by Buyer
- Optical instruments and scales

3.0 Requirements - Shop Facilities

3.1 The Seller shall provide a measurement area for final dimensional verification. This will require approximately 30 feet of headroom to the bottom of the crane hook. A vertical pump stand with a level, flat surface matching the tolerances of the pump support plates are required for mounting pumps during dimensional check. The measurement area shall be temperature controlled to 70 °F ± 5 °F. The Seller shall supply calibrated thermometers with traceable calibration sheets. This temperature shall be maintained during the dimensional measurement by the Seller.

3.2 The Seller will make final dimensional measurements using their own equipment, such as calibrated jig transits, tilting levels, and calibrated and certified scales. Scales will be graduated to 0.01 inch. The optical instruments will be equipped with micrometers graduated to 0.001 inch.

3.3 The vertical pump support plate face will be profiled at 15 degree intervals and plotted for record.

3.4 The Seller shall allow adequate time to perform final dimensional measurement of each pump in the presence of the Buyer's representative to witness/observe the Seller's inspection activity. The

Seller shall also provide appropriate notification to the Buyer for each witnessed inspection activity. Note that the Seller has sole responsibility for quality control inspections of their products.

3.5 There shall be no visual interference with the optical measurements performed by the Seller. Examples of visual interference are arc welding and equipment movement.

3.6 The Seller shall provide rigid supports for optical transits and levels. Substantial platforms, ladders, stairs, and handrails shall be provided, all meeting OSHA requirements. The instrument supports shall be set up a minimum of 7 feet away from the vertical pump stand and at least 3 feet higher.

3.7 The Seller shall submit the following drawings for the Buyer's review:

a The measurement enclosure area

b The vertical pump stand

c The optical instrument supports

d Substantial platforms, ladders, and handrails

e The crane interface

3.8 The Seller will furnish one balanced lifting yoke, or one for each lifting lug configuration as necessary, to the dimensions and configurations supplied by the Buyer, for the plumb lift testing of the vertical pumps.

3.9 The Seller shall provide adequate lighting to facilitate the optical dimensional measurements. Lighting should generally be 100-foot candle average where measurements will be made.

This information has been identified as EXPORT-CONTROLLED INFORMATION which contains technical information whose export is restricted by statute. Violations may result in administrative, civil, or criminal penalties. Limit dissemination to US Department of Energy employees and contractors and other US Government agencies.

Document Number: 24590-WTP-3PS-MPC0-TP009 Rev: 1

Title: Engineering Specification for Vessel-Mounted Transfer Pumps – HLW Facility

R10220779

RIVER PROTECTION PROJECT – WASTE TREATMENT PLANT

ENGINEERING SPECIFICATION

FOR

Submersible Centrifugal Sump Pumps

ISSUED BY
RPP-WTP PDC
INIT DATE

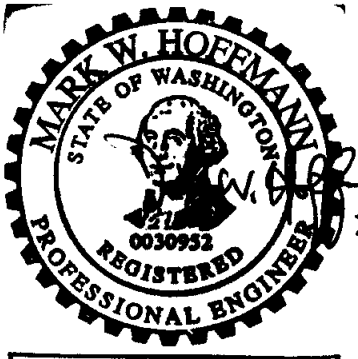

2/24/04

EXPIRES 12/10/04

Content applicable to ALARA? ☐ **Yes** ☐ **No**

ADR No. **Rev**

Quality Designator
QL
DOE Contract No. DE-AC27-01RV14136

NOTE: Contents of this document are Dangerous Waste Permit affecting.

REV	DATE	REASON FOR REVISION	BY	CHECK	REVIEW	QA	APEM/DEM
1	2/23/04	Issued for Permitting Use				N/A	
0	10/02/02	Issued for Permitting Use	Jessica Jackson	Chris Morley	Suzanne Kirk		

SPECIFICATION No. **Rev**
24590-WTP-3PS-MPVS-TP001 1

Please note that source, special nuclear and byproduct materials, as defined in the Atomic Energy Act of 1954 (AEA), are regulated at the U.S. Department of Energy (DOE) facilities exclusively by DOE acting pursuant to its AEA authority. DOE asserts that pursuant to the AEA, it has sole and exclusive responsibility and authority to regulate source, special nuclear, and byproduct materials at DOE-owned nuclear facilities. Information contained herein on radionuclides is provided for process description purposes only.

Contents

1 Scope 1
1.1 Project Description and Location 1
1.2 Equipment, Material, and Services Required 1
1.3 Work by Others 1
1.4 Definitions and Acronyms 2
1.5 Safety/Quality Classifications 2
2 Applicable Documents 2
2.1 General 2
2.2 Codes and Industry Standards 2
2.3 WTP Specifications 3
3 Design Requirements 3
3.1 Basic Function 3
3.2 Performance 3
3.3 Design Conditions 4
3.4 Environmental Conditions 4
3.5 Mechanical Requirements 4
3.6 Loadings 5
3.7 Electrical Requirements 5
4 Materials 5
4.1 Construction 5
4.2 Prohibited Materials 6
5 Fabrication 6
5.1 General 6
5.2 Welding 6
5.3 Assembly 6
6 Tests and Inspections 6
6.1 General 7
6.2 Positive Material Identification 7
7 Preparation for Shipment 7
7.1 Cleanliness 7
7.2 Painting 7
7.3 Tagging 7
7.4 Packaging and Shipping Instructions 8
8 Quality Assurance 9

8.1 General Requirements 9
9 Configuration Management 9
10 Submittals 9
10.1 General 9
10.2 Drawings 9
10.3 Parts List 10
10.4 Inspection and Test Reports 10
10.5 Manuals 10
10.6 Schedules 10
10.7 Other 10
10.8 Records 11

1 Scope

1.1 Project Description and Location

The River Protection Project-Waste Treatment Plant (WTP) is a complex of waste treatment facilities where the US Department of Energy (DOE) Hanford Site tank waste will be put into stable glass form. The WTP Contractor will design, build and start-up the WTP pretreatment and vitrification facilities for the DOE Office of River Protection (ORP). The waste treatment facilities will pretreat and immobilize the low-activity waste (LAW) and high-level waste (HLW) currently stored in underground storage tanks at the Hanford Site.

The Hanford Site occupies an area of about 560 square miles and is located along the Columbia River, north of the city of Richland, Washington. The WTP Facility will be constructed at the east end of the 200 East Area of the Hanford Site. The counties of Benton, Franklin, and Grant surround the Hanford Site.

1.2 Equipment, Material, and Services Required

The Seller shall design, furnish materials, fabricate, shop test, and deliver submersible centrifugal pumps in accordance with this specification and its appendices and the requirements contained in the Material Requisition. The Seller shall provide the following as a minimum:

1.2.1 Vertical close-coupled submersible centrifugal pumps complete with electric motor drivers and the accessories specified on the individual Pump Data Sheets.

1.2.2 If specified on individual Pump Data Sheets, pumps shall be provided with a guide rail system.

1.2.3 One set of any special tools required for repair and maintenance.

1.2.4 One lot of consumable spare parts per item for start-up and one year operation.

1.2.5 Documentation and Submittals as listed in Section 10.

1.3 Work by Others

1.3.1 Material unloading and storage at jobsite

1.3.2 Installation labor

1.3.3 Foundation and anchor bolts

1.3.4 Connection of pipework external to unit

1.3.5 Electric power supply and connection

1.3.6 Wiring external to pump and driver

1.3.7 Motor starters and control systems

1.4 Definitions and Acronyms

1.4.1 Definitions:

Quality Level	WTP Project's quality classifications of structures, systems, and components based on their importance to safety. See Supplier Quality Assurance Program Requirements Datasheet and individual Pump Data Sheets for quality requirements.
Non-Quality Related	Structures, systems, components and associated services that are manufactured using standard commercial practices.
Seismic Category	WTP Project's seismic classifications of structures, systems, and components based on their safety function. See Engineering Specification 24590-WTP-3PS-FB01-T0001 and individual Pump Data Sheets for seismic requirements.

1.4.2 Acronyms of Organizations and Terms

ASME	American Society of Mechanical Engineers
HI	Hydraulic Institute
NPSH	Net Positive Suction Head
OSHA	Occupational Safety and Health Administration

1.5 Safety/Quality Classifications

Quality Level and Seismic Category of each pump described in this specification will be indicated on the individual Pump Data Sheets.

2 Applicable Documents

2.1 General

2.1.1 Work shall be done in accordance with the referenced codes, standards, and documents listed below, which are an integral part of this specification.

2.1.2 When specific chapters, sections, parts, or paragraphs are listed following a code, industry standard, or reference document, only those chapters, sections, parts, or paragraphs of the document are applicable and shall be applied. If a date or revision is not listed, the latest issue, including addenda, at the time of Request for Quote (RFQ) shall apply. When more than one code, standard, or referenced document covers the same topic, the requirements for all must be met with the most stringent governing.

2.2 Codes and Industry Standards

Sponsor	Number	Subject
ASME	B16.5	Pipe Flanges and Flanged Fittings

Sponsor	Number	Subject
ASME	B1.20.1	Pipe Threads, General Purpose (Inch)
HI	1.1-1.6, 9.1-9.8	Centrifugal Pump Standards
OSHA	1910.95	Occupation Noise Exposure

2.3 WTP Specifications

2.3.1 24590-WTP-3PS-G000-T0001, *General Specification for Supplier Quality Assurance Program Requirements*

2.3.2 24590-WTP-3PS-G000-TP002, *Specification for Positive Material Identification (PMI)*

2.3.3 24590-WTP-3PS-G000-T0003, *General Specification for Packaging, Shipping, Handling and Storage Requirements*

2.3.4 24590-WTP-3PS-MUMI-T0002, *Engineering Specification for Low Voltage Induction Motors*

2.3.5 24590-WTP-3PS-FB01-T0001, *Engineering Specification for Structural Design Loads for Seismic Category III & IV Equipment and Tanks*

2.3.6 24590-WTP-3PS-M000-T0002, *General Specification for Mechanical Handling Equipment Design & Manufacture* (Note: Only the sections, paragraphs, and appendices referenced below are applicable and form an integral part of this specification)

Section 3.4 (all paragraphs)	Paragraph 5.5.1.1.1
Section 3.5.2 (paragraphs: 4,5,7,8,12)	Appendix C
Paragraphs 3.5.5.1 & 3.5.5.2	

3 Design Requirements

3.1 Basic Function

These submersible centrifugal pumps shall provide the motive force required to remove liquids from sumps.

3.2 Performance

3.2.1 Pumps shall have head-capacity curves that rise continuously from maximum flow to shutoff.

3.2.2 Pumps shall be capable of operating continuously at any flowrate between minimum and maximum flow without cavitation, vibration in excess of the HI Standards latest Vibration Acceptance Criteria, or overloading motor.

3.2.3 Pump/motor unit shall have a combined noise level less than 85 dBA when measured 3 feet in any direction from pump/motor unit. (OSHA 1910.95) Seller shall furnish expected noise data.

3.2.4 Pumps shall have a rotational speed no greater than that recommended by the Hydraulic Institute, which is based on the NPSH available at rated capacity and a suction specific speed value of 11,000.

3.3 Design Conditions

3.3.1 Equipment and accessories are to be used in a plant with a design life of 40 years. The design objective for pumps purchased to this Specification shall be 40 years of useful life with periodic maintenance as recommended by the Seller. Maintainable and replaceable items will be specified for cost-effective design lives taking into account current technology and standards.

3.3.2 Furnished pumps shall be submersible, closed-coupled centrifugal pumps with accessories, conforming to design requirements stated in individual Pump Data Sheets.

3.3.3 Pumps shall have dual mechanical seals, with an oil reservoir for lubrication.

3.3.4 Pump casings shall be designed to withstand the suction pressure plus shutoff head.

3.3.5 Impellers shall be statically and dynamically balanced before assembly on pumps shafts. Dynamic balance to manufacturer's standard.

3.3.6 Impeller and casing wear rings (when furnished) shall be of compatible materials with nongalling characteristics. Wear rings shall be positioned and rigidly attached to prevent loosening.

3.3.7 Pumps shall have alignment or centering fits on all assembly joints or junctions as required for reassembly or alignment of parts.

3.3.8 Pumps and guide rails shall be designed for ease of decontamination. See 24590-WTP-3PS-M000-T0002 paragraphs 3.1.1, 3.5.2.4, 3.5.2.5, 3.5.2.7, 3.5.2.8, and 3.5.2.12.

3.3.9 Dimensions shall be US Standard.

3.4 Environmental Conditions

3.4.1 Sump conditions will be specified on individual Pump Data Sheets.

3.4.2 Pumps and auxiliaries shall be suitable for outdoor installation in the environmental conditions specified on the individual Pump Data Sheets, but will be normally located indoors.

3.4.3 Some pumps will be in the LAW R5 areas. See 24590-WTP-3PS-M000-T0002 section 3.4 for details.

3.5 Mechanical Requirements

3.5.1 See the individual Pump Data Sheets.

3.5.2 Furnished pumps shall have integral support feet and intake strainers.

3.5.3 Through bolted flanges are preferred to threaded connections for the discharge nozzle. If alternative methods of flange connection are required, the Seller shall supply flange details in the proposal.

3.5.4 Pumps shall have attached lifting eyes. Guide rail systems shall have a quick disconnect connection between pump and discharge pipe and be designed for ease of pump removal from the guide rail mounting.

3.5.5 Seller shall advise Buyer if sump pumps that are not furnished with a guide rail system need to be anchored in place to keep them from moving while pumping. If anchors are required, Seller shall provide anchor design.

3.5.6 Assuming normal maintenance practices are accomplished by Buyer as recommended by Seller and based on information provided in individual Pump and Motor Data Sheets, Seller shall provide data similar to the following for the pump and motor:

- estimated service life
- common modes of failure (i.e. bearings seized, motor burned out, etc.) and the estimated hours until such an event occurs
- maintenance time for replacement of major maintenance items (such as bearings), assuming normal work environments

3.6 Loadings

3.6.1 Equipment shall, as a minimum, be designed for the loading specified in Engineering Specification 24590-WTP-3PS-FB01-T0001, as applicable.

3.7 Electrical Requirements

3.7.1 See the individual Pump Data Sheets.

3.7.2 Provide each pump with an electric motor in accordance with Engineering Specification 24590-WTP-3PS-MUMI-T0002.

3.7.3 Pumps shall have 100 feet of electrical cord unless otherwise specified on the individual Pump Data Sheet.

4 Materials

4.1 Construction

4.1.1 All surfaces contacting sump fluid, including bolts and nuts, shall be made of 316L stainless steel unless otherwise noted in the individual Pump Datasheets. Stainless steel pumps shall have no aluminum components that are exposed to sumps fluids.

4.1.2 Materials used in constructing the equipment shall be suitable for the specified service and subject to review and acceptance by Buyer. Where specific materials are identified in this

specification or the individual Pump Data Sheets, the bid shall be based on their use. However, the Seller may additionally offer the option of utilizing alternative materials of equal or superior properties for Buyer's consideration.

4.1.3 Some pumps will be used in LAW R5 areas, see 24590-WTP-3PS-M000-T0002 paragraphs 3.5.5.1 and 3.5.5.2, and Appendix C for recommendations on material selection for radioactive environments.

4.2 Prohibited Materials

4.2.1 Mercury and other low melting point metals, their alloys, or materials containing such metals as their basic constituents shall not be used in the construction of pumps.

4.2.2 The use of asbestos is prohibited.

5 Fabrication

5.1 General

5.1.1 Use Seller's standard procedures and those of sub-suppliers for fabrication and manufacture of items covered by this specification provided they do not render these items unsuitable for service and conditions specified herein. Where Seller's (or sub-suppliers) standard procedures conflict with applicable specifications, codes or other standards, apply the most stringent requirements to fabricate and manufacture equipment specified.

5.1.2 All equipment shall be furnished neatly finished and free of burrs and fins.

5.1.3 Surface finish shall be in accordance with 24590-WTP-3PS-M000-T0002 paragraph 5.5.1.1.1.

5.2 Welding

Fabricated sections and repairs shall be welded using welding methods, procedure qualifications, electrodes, preheat, postweld treatment, and welder performance tests in accordance with the Seller's standard Quality Assurance procedures.

5.3 Assembly

All components furnished under this specification shall be preassembled in Seller's shops to maximum extent consistent with shipping, handling and erection constraints.

6 Tests and Inspections

Specified tests shall be conducted in accordance with applicable HI Standards, except as noted in this section. The chloride content of liquids used to test austenitic stainless steel materials shall not exceed 50 parts per million. To prevent deposition of chlorides as a result of evaporative drying, all residual liquid shall be removed from tested parts at the conclusion of the test.

6.1 General

6.1.1 Seller shall conduct and be responsible for all shop tests listed in the individual Pump Data Sheets and other applicable standards and reference documents. Tests may be witnessed by the Buyer's Supplier Quality Representative.

6.1.2 As a minimum, every pump shall have a hydrostatic and a performance test. Seller shall submit testing procedures for Buyer review and approval.

6.1.3 Seller shall furnish all facilities necessary for the performance of such tests. In the event Seller's own facilities are not suitable for such tests, Seller shall advise Buyer and obtain advanced written permission for using alternative facilities.

6.1.4 The Seller shall supply Buyer with all certified test data whether witnessed or not.

6.2 Positive Material Identification

If specified on individual Pump Data Sheets, pressure retaining casings of 316 or higher grade alloy shall be tested for Positive Material Identification. Positive Material Identification tests shall be performed in accordance with Specification 24590-WTP-3PS-G000-TP002.

7 Preparation for Shipment

7.1 Cleanliness

All dirt, oil, grease, mill scale, cuttings, weld spatter, and other foreign matter shall be removed from all interior and exterior surfaces per General Specification 24590-WTP-3PS-G000-T0003.

7.2 Painting

7.2.1 Nonferrous parts, nameplates, instruction plates, machined faces and fittings, preparations for field welding, and parts to be embedded in concrete shall not be painted.

7.2.2 If the individual Pump Data Sheet specifies ferrous materials, exposed surfaces shall be painted in accordance with Seller's standard procedures. Rust preventative means in accordance with General Specification 24590-WTP-3PS-G000-T0003 shall be employed to provide protection of ferrous surfaces during shipment and storage.

7.3 Tagging

7.3.1 Each pump shall be provided with a permanent corrosion-resistant nameplate(s) securely attached at a readily visible location on the equipment and on any other major piece of auxiliary equipment.

7.3.1.1 The nameplate(s) shall be stamped with the following information in units consistent with the datasheet:

7.3.1.1.1 Plant item (equipment) number.

7.3.1.1.2 Purchase order number.

7.3.1.1.3 Seller's size and model number.

7.3.1.1.4 Pump serial number.

7.3.1.1.5 Capacity.

7.3.1.1.6 Pumping head.

7.3.1.1.7 Casing hydrostatic test pressure.

7.3.1.1.8 Speed, RPM.

7.3.1.1.9 Maximum allowable working pressure (MAWP).

7.3.1.1.10 Temperature, basis for MAWP.

7.3.1.1.11 Bearing manufacturer's identification numbers.

7.3.1.2 In addition to being stamped on the nameplate, the pump serial number shall be plainly and permanently marked on the pump casing.

7.3.1.3 Rotational arrows shall be cast in or attached to each major item of rotating equipment at a readily visible location.

7.3.1.4 Nameplate(s) and rotation arrows (if attached) shall be of austenitic stainless steel or of nickel-copper alloy (Monel or its equivalent). Attachment pins shall be of the same material. Welding is not permitted.

7.4 Packaging and Shipping Instructions

7.4.1 All equipment shall be packed, securely anchored and protected for shipment in accordance with General Specification 24590-WTP-3PS-G000-T0003.

7.4.2 All lifting points shall be clearly marked. Lifting lugs shall be provided for motor-pump assemblies and for guide rail assemblies.

7.4.3 All openings shall be covered to protect against moisture and dust.

7.4.4 Packaging shall provide protection for equipment during transit and storage. Equipment may be stored outdoors at jobsite for as long as one year before it is installed.

8 Quality Assurance

8.1 General Requirements

8.1.1 The Seller's Quality Assurance Program (QAP) Requirements are included in 24590-WTP-3PS-G000-T0001, Supplier Quality Assurance Program.

8.1.2 Seller's QAP Manual shall be submitted to buyer for review in accordance with 24590-WTP-3PS-G000-T0001, Supplier Quality Assurance Program.

8.1.3 Seller's QAP, as a minimum, shall contain the requirements detailed in the Supplier Quality Assurance Program Requirements Data Sheet(s) listed in Section 2 of the MR.

9 Configuration Management

Equipment and/or components covered by this specification are identified with Plant Item (equipment) numbers as given in the individual Data Sheets. Each item shall be tagged per paragraph 7.3.

10 Submittals

10.1 General

Submittals and document quantities, including Drawings, Installation Procedures, Inspection and Test Reports, Calculations, Manuals, Certificates of Conformance, Schedules, Material Certificates, and others appropriate to the purchased equipment, are detailed in Section 3 of the Material Requisition, including Forms G-321-E and G-321-V.

10.2 Drawings

Drawings shall be inclusive, as a minimum, of all the following requirements:

10.2.1 Outline drawings of pump-motor assembly and guide rails, including outline and detail drawings for each component, and weights of components and assemblies.

10.2.2 Mounting dimensions and information required for the design of supports and/or foundations. (See 3.5.4 and 3.5.5.)

10.2.3 Flange locations, dimensions and details per paragraph 3.5.3.

10.2.4 Locations and identification of parts included in the parts list.

10.2.5 Wiring schematic diagrams and data. Diagrams shall include wire gauges and show wires and equipment applicable to the supplied units only. External connections for power shall be shown on these diagrams. Submittals shall meet requirements specified in 24590-WTP-3PS-MUMI-T0002 (paragraph 10.1) as applicable.

10.2.6 See G-321-E Form of the Material Requisition for drawing submittal requirements.

10.2.7 Mechanical seal drawings.

10.3 Parts List

10.3.1 Priced lists of recommended spare parts for start-up and one (1) year's operation.

10.3.2 Complete lists of equipment parts, with drawings showing sectional views of identified parts and assembly locations shall be provided.

10.3.3 Seller shall identify limits to shelf-life and storage requirements of parts anticipated to have functional life spans shorter than the equipment design life.

10.4 Inspection and Test Reports

10.4.1 Inspection and Test Reports shall be provided. See Section 3 and Section 5 of the Material Requisition.

10.4.2 Completed data sheets, as applicable, incorporating required information.

10.4.3 Performance curves (Quadrant) showing NPSH Required, Horsepower, Efficiency, flow vs. head at applicable speeds.

10.4.4 Hydrostatic test results.

10.4.5 Certified Performance test report.

10.4.6 Certificates of material conformance per the requirements referenced in 6.2.

10.4.7 All other certified test data per paragraph 6.1.4.

10.5 Manuals

10.5.1 Manuals shall be furnished to provide information on the correct storage, installation, operation and maintenance of the equipment assembly.

10.5.2 Rigging, storage, installation and maintenance instructions/manuals shall be provided 30 days prior to shipment.

10.6 Schedules

Manufacturing schedules and progress reports shall be furnished and sent directly to the Project Expeditor as shown in Section 3 of the Material Requisition.

10.7 Other

10.7.1 Noise data per paragraph 3.2.3.

10.7.2 Estimated service life and failure data per paragraph 3.5.6.

10.7.3 Alternative materials per paragraph 4.1 (optional).

10.7.4 Documentation required by attached specifications.

10.8 Records

The following Documents shall be submitted for review and maintained on file at Seller's shop and be accessible for Buyer's review:

10.8.1 Dynamic balancing procedures

10.8.2 Hydrostatic test procedures

10.8.3 Performance test procedures

10.8.4 Cleaning and painting procedures

10.8.5 Shipping preparation procedures

ISSUED BY
RPP-WTP PDC
DS 10/7/02
INIT DATE

RIVER PROTECTION PROJECT – WASTE TREATMENT PLANT

ENGINEERING SPECIFICATION

FOR

Field-Erected Tanks Design and Fabrication

DOE Contract No.
DE-AC27-01RV14136

10/13/02

EXPIRES 12/10/02

This bound document contains a total of 12 pages.

0	10/4/02	Issued For Permitting Use	Jessica Jackson		SMC
REV	DATE	REASON FOR REVISION	PREPARER	CHECKER	APPROVER

SPECIFICATION No. Rev
24590-WTP-3PS-MTF5-TP001 0

10/7/02
Processed Data Entry ☐ Copied QA ☐ Scanned ☐ Filed

Contents

1 Scope 1
1.1 Description and Location 1
1.2 Definitions 1
1.3 Conflicts 1
1.4 Buyer's Responsibilities 1
1.5 Seller's Responsibilities 1
2 Applicable Documents 2
2.1 Codes and Industry Standards 2
2.2 Related Documents 3
2.3 Project Documents 3
3 Quality Assurance 3
4 Design Requirements 3
4.1 Basic Requirements 3
4.2 Loading 3
4.3 Corrosion Allowance 4
4.4 Corrosion Control 4
4.5 Nozzles and Manways 4
4.6 Nozzle Loading 5
4.7 Nozzle Reinforcement 5
4.8 Internal Components 6
4.9 External Components 6
5 Materials 6
5.1 General 6
5.2 Pipe Fittings 6
6 Fabrication 6
6.1 General 6
6.2 Layout 7
6.3 Welding Requirements 7
7 Tests and Inspections 7
7.1 Non-Destructive Examinations 7
7.2 Hydrotest and Settling Measurement 7
7.3 Cathodic Protection 8
7.4 Final Inspection of Completed Tank 8
8 Preparation for Completion 8

8.1 General 8
9 Documentation and Submittals 8
9.1 General 8

1 Scope

1.1 Description and Location

1.1.1 This specification together with the subcontract and Drawings covers the requirements for the design, fabrication, and testing of steel tanks for the U.S. Department of Energy, Office of River Protection, River Protection Project – Waste Treatment Plant (RPP-WTP) located at Hanford Site in the southeastern part of Washington State.

1.1.2 This specification covers tanks designed to API Standard 650, AWWA D100, and NFPA 22 standards only.

1.2 Definitions

1.2.1 **MDS**: The Buyer's mechanical data sheet.

1.2.2 **Drawings**: The Buyer's Drawings include the tank equipment assembly drawing and any associated standard drawings.

1.2.3 **Quality Level:** Establishes the quality assurance program requirements. For the purposes of this specification, Quality Level also determines allowable nozzle reinforcement methods and radiographic and ultrasonic testing requirements. Buyer assigns Quality Levels on the MDS.

1.2.4 **Seismic Category:** Classification of tanks defining the required condition, status, and operating function during and after a seismic event. The Seismic Category determines the analysis method and acceptance criteria appropriate for the intended service and safety function of the tank. Buyer assigns Seismic Category on the MDS.

1.2.5 Buyer: Contractor

1.2.6 Seller: Subcontractor

1.3 Conflicts

1.3.1 In cases of conflicts between this specification and other drawings or specifications, the Seller shall call attention to the conflict and request an interpretation by the Buyer.

1.3.2 All deviations from this specification, the subcontract, or the Drawings shall have the written approval of the Buyer.

1.4 Buyer's Responsibilities

1.4.1 Process design of the tank for performance, capacity, or configuration is the Buyer's responsibility, and is not part of this specification.

1.5 Seller's Responsibilities

1.5.1 Seller shall assume complete responsibility for the design, fabrication, testing, inspection, and documentation as required by the Buyer and detailed in the subcontract.

1.5.2 Buyer's review of the Seller's drawings, or release of the tank by the Buyer's representative, shall in no way relieve the Seller of the responsibility for complying with all the requirements of this specification and the subcontract.

1.5.3 The Seller shall substantiate any necessary changes to the MDS and Drawings and obtain approval from the Buyer.

2 Applicable Documents

2.1 Codes and Industry Standards

2.1.1 Unless otherwise noted, all codes and standards referenced herein shall be to the latest editions, addenda, and supplements at the time of the issue of the subcontract.

2.1.2 American Petroleum Institute, API Standard 650, "Welded Steel Tanks for Oil Storage."

2.1.3 American Petroleum Institute, API Standard 653, "Tank Inspection, Repair, Alteration, and Reconstruction."

2.1.4 American Water Works Association, AWWA D100, "Welded Steel Tanks for Water Storage."

2.1.5 National Fire Protection Association, NFPA 22, "Standard for Water Tanks for Private Fire Protection."

2.1.6 American Society of Civil Engineers, ASCE 7-98, "Minimum Design Loads for Buildings and Other Structures."

2.1.7 American Society for Nondestructive Testing, Inc., Recommended Practice No. SNT-TC-1A, 1980 Edition.

2.1.8 Occupational Safety and Health Administration Regulations, OSHA 29 CFR Part 1910, "Walking-Working Surfaces."

2.1.9 American Society of Mechanical Engineers, ASME B16.5, "Pipe Flanges and Flange Fittings NPS 1/2 through NPS 24."

2.1.10 National Fire Protection Association, NFPA 70, "National Electrical Code"

2.1.11 National Fire Protection Association, NFPA 780, "Standard for Installation of Lightning Protection Systems"

2.1.12 Underwriters Laboratories Inc., UL 96, "Lightning Protection Components"

2.1.13 NACE International Recommended Practices, RP0196, "Galvanic Anode Cathodic Protection of Internal Submerged Surfaces of Steel Water Storage Tanks"

2.1.14 NACE International Recommended Practices, RP0193, "External Cathodic Protection of On-Grade Carbon Steel Storage Tank Bottoms"

2.1.15 NACE International Recommended Practices, RP0575, "Internal Cathodic Protection in Oil Treating Vessels"

2.2 Related Documents

2.2.1 Other project specifications, standards, and standard details as listed or referenced in Exhibits E and F of the subcontract shall be used as applicable for the design and fabrication of the tanks.

2.3 Project Documents

2.3.1 RPP-WTP Specification for Tank Welding, 24590-WTP-3PS-MTSS-T0001.

2.3.2 RPP-WTP Engineering Specification for Coating and Lining of Field Erected Tanks, 24590-WTP-3PS-AFPS-T0005.

2.3.3 RPP-WTP Specification for Instrumentation for Packaged Systems, 24590-WTP-3PS-JQ07-T0001.

2.3.4 RPP-WTP Engineering Specification for Hot and Anti-Sweat Thermal Insulation, 24590-WTP-3PS-NN00-T0001.

2.3.5 RPP-WTP General Specification for Supplier Quality Assurance Program Requirements, 24590-WTP-3PS-G000-T0001.

3 Quality Assurance

3.1 Section 9 of the material requisition or Exhibit J of the subcontract and the *RPP-WTP General Specification for Supplier Quality Assurance Program Requirements* covers quality assurance requirements. Refer to the MDS for the quality level specified for the tank.

4 Design Requirements

4.1 Basic Requirements

4.1.1 Unless otherwise specified, all tanks shall be designed and fabricated in accordance with the Drawings, design standard identified on the MDS, and any additional requirements of this specification, MDS, and the referenced Drawings.

4.1.2 Seller shall consider design details and material thickness shown on Drawings and MDS as the minimum requirements.

4.1.3 Seller shall not scale Drawings.

4.2 Loading

4.2.1 Seismic analysis shall be performed per the requirements of the seismic design standard identified on the MDS.

4.2.2 If wind, snow, or other loadings are specified on the MDS, the design for such loadings shall be based on the requirements of the *ASCE 7-98*, using the loading parameters identified on the MDS.

4.3 Corrosion Allowance

4.3.1 Corrosion allowance is specified on the MDS and shall be applied to each surface exposed to process vapor or liquid. Internal piping shall have the specified corrosion allowance applied to both internal and external surfaces.

4.3.2 Unless otherwise specified, corrosion allowance shall not be applied to external tank surfaces.

4.4 Corrosion Control

4.4.1 If specified on the MDS, the cathodic protection system shall be designed according to NACE RP0196, RP0193, and RP0575. The system, along with protective coating, shall protect the interior of the tank along with the bottom in contact with the earth.

4.5 Nozzles and Manways

4.5.1 All nozzles shall be set-in type or through type with full penetration welds. All inside nozzle neck edges shall be rounded to 1/8-inch minimum radius. Set-in type nozzles shall be flush with the inside wall of the shell or roof.

4.5.2 Flanges shall be weld neck or slip-on per *ASME B16.5*.

4.5.3 Flange bolt holes shall straddle plant north-south orientations.

4.5.4 The following illustrate acceptable and unacceptable nozzle configurations and welding:

Acceptable Nozzle Connections

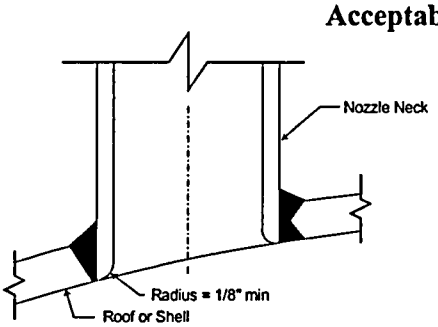

Set-in Nozzle with Full Penetration Weld

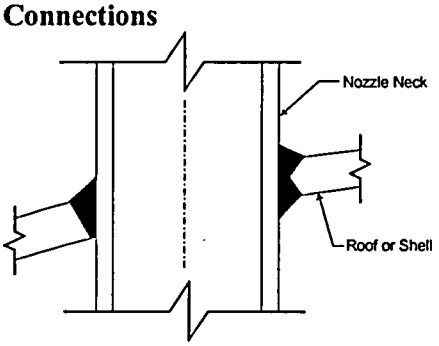

Through Nozzle with Full Penetration Weld

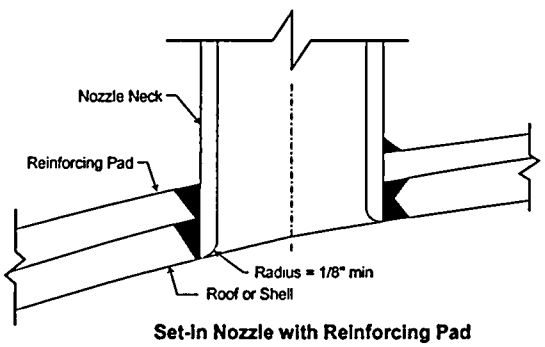

Set-in Nozzle with Reinforcing Pad

Unacceptable Nozzle Connections

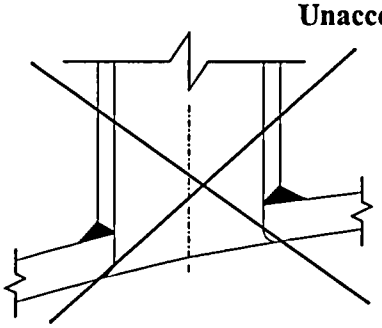

Set-on Nozzle with Full Penetration Weld

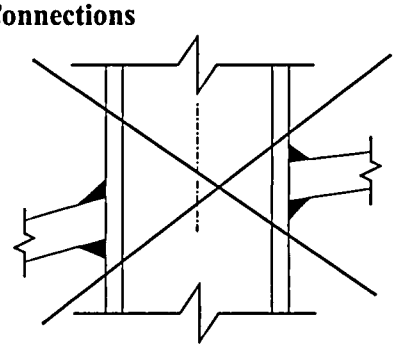

Through Nozzle with Double Fillet Weld

4.6 Nozzle Loading

4.6.1 Seller shall reinforce nozzles as required to limit deflections given the piping loads and deflection limits determined by the Buyer.

4.7 Nozzle Reinforcement

4.7.1 Nozzle reinforcing pads shall have one-piece construction. Pad thickness shall be the same as the penetrated shell and have one 1/8 inch NPT telltale hole for testing purposes. On completion of all fabrication activities, the hole shall be fitted with a screwed plug of the same material as the reinforcement plate.

4.8 Internal Components

4.8.1 Design and layout of support members for tank internals shall be the responsibility of the Seller.

4.9 External Components

4.9.1 If the MDS specifies insulation, the Seller shall design the insulation systems and supports for the insulation function designated on the MDS and according to the requirements of *RPP-WTP Engineering Specification for Hot and Anti-Sweat Thermal Insulation.*

4.9.2 If specified on the Drawings, Seller shall provide and install pipe support clips. The material of the clip or reinforcing pad shall match the material of the shell.

4.9.3 Stainless steel grounding lugs shall be installed on all tanks as indicated on the Drawings.

4.9.4 All tanks shall have a nameplate of Type 300 stainless steel attached securely on a bracket welded to the tank at the location indicated on the Drawings. Bracket shall be the same material type as the adjoining tank shell. The nameplate shall include the Equipment Number in addition to all markings mandated by the tank design standard.

4.9.5 All ladders, platforms, landings and cages shall be designed and fabricated per *OSHA 29 CFR Part 1910.*

4.9.6 Heaters, grounding lugs, and instrumentation shall conform to NFPA 70, NFPA 780, and UL 96.

5 Materials

5.1 General

5.1.1 Materials shall be new, and free from defects. Material shall be furnished to the specification and grade shown on the MDS. The Seller shall not substitute materials without written approval from the Buyer. The Seller shall furnish certificates of compliance that the material meets the required specification.

5.2 Pipe Fittings

5.2.1 Pipe fittings shall conform to the appropriate ASME and ANSI standards for materials and dimensions unless otherwise stated in the subcontract.

6 Fabrication

6.1 General

6.1.1 Fabrication tolerances shall be in accordance with the tank design standard indicated on the MDS.

6.1.2 All stamps used for identification reference markings shall be of the low stress type. Stampings shall not be located near discontinuities.

6.1.3 When rolling any austenitic stainless plate, care shall be taken to prevent carbon pickup or contamination of rolled material. The work area shall be free of carbon steel grindings and general cleanliness shall be maintained to preclude carbon contamination.

6.1.4 Only stainless steel brushes, clean iron-free sand, ceramic or stainless steel grit shall be used for cleaning stainless steel or non-ferrous alloy surfaces. Cleaning tools or materials shall not have been previously used on carbon steel.

6.2 Layout

6.2.1 The longitudinal seams of adjacent shell courses shall be staggered by a minimum length (measured from the toe of the welds) of 5 times the plate thickness, or 4 inches whichever is greater.

6.2.2 Plate layouts shall be arranged so that longitudinal and circumferential weld seams clear all nozzles, manways, and their reinforcing pads to the maximum extent possible. A minimum clearance of eight times the plate thickness from the toes of the welds is required.

6.3 Welding Requirements

6.3.1 Seller shall comply with the *RPP-WTP Specification for Tank Welding.*

6.3.2 All welding shall be continuous. Stitch welding is prohibited.

7 Tests and Inspections

7.1 Non-Destructive Examinations

7.1.1 The NDE work must be performed by an inspector certified to the requirements of *SNT-TC-1A*. Either Level II or Level III inspectors certified to SNT-TC-1A shall interpret the results.

7.2 Hydrotest and Settling Measurement

7.2.1 All tanks shall be hydrotested and measured for settlement according to the requirements of *API Standard 653*. In addition, the following shall be followed: The tanks shall be filled with water at a constant rate. The water shall be held for 24 hours during which the settlement of foundation shall be measured. If settlement is observed, measurements shall be taken every 24 hours until settlement stops. All settlement measurements shall be recorded. After settlement stops, the water shall be held for 7 days. After obtaining clearance from Buyer, the tanks shall be drained and dried thoroughly.

7.2.2 Tanks made of austenitic stainless steel materials shall be hydrotested with potable water containing no more than 50 PPM chloride.

7.3 Cathodic Protection

7.3.1 Cathodic protection systems shall be tested to show compliance with NACE RP-0196-1996, RP0193-2001, RP0575-2001.

7.4 Final Inspection of Completed Tank

7.4.1 All external and internal examinations will be carried out by the Buyer's representative, unless otherwise agreed to in the approved quality assurance program. The finished dimensions and cleanliness of the tank shall comply with the relevant drawings and specifications after completion of all tests.

8 Preparation for Completion

8.1 General

8.1.1 Machined carbon steel surfaces, which are not protected by blind flanges, shall be coated with rust preventative.

8.1.2 All flanged openings, which are not provided with a cover, shall be protected by an *ASME B16.5* carbon steel blind flange of the same rating as the flange, a full-faced rubber gasket with a minimum thickness of 1/8 inch and carbon steel bolts with stainless steel washers.

9 Documentation and Submittals

9.1 General

9.1.1 Seller shall comply with the requirements of Exhibit I, Attachments A and B of the subcontract, as applicable. Furnish all applicable drawings, design calculations, reports of special analyses, welding procedures with procedure qualification records, test procedures, test reports, certificates of compliance, operating manuals, installation manuals, maintenance manuals and all other required documents.

9.1.2 Design calculations shall include relevant design standard formulas and source paragraph references, values used in the formulas, and calculated results with comparison to acceptable values. Where calculations are based on other than the specified design standard formulas, the source of the formulas shall be referenced. Where a computer program is used for calculations, a brief program description shall be given, including name and version of the program. If the program is not commercially available to industry, Seller shall maintain and provide, upon request, program documentation. Calculations shall include, but not be limited to:

- Design standard calculations
- Seismic calculations
- Support calculations
- Nozzle load analysis for local and gross effect, when required
- Design of attachments, both internal and external

- Cathodic protection design calculations.

9.1.3 Seller shall make a complete set of Buyer approved drawings and other documents available to the Buyer's representative at the time the quality surveillance activities are being conducted.

9.1.4 All records pertaining to the non-destructive examinations, base materials, filler materials, fabrication, and inspection shall be traceable to the area and part inspected and be accessible for Buyer's examination.

9.1.5 Seller shall provide certified copies of the test reports as required by Exhibit I of the subcontract.

R10336954

RIVER PROTECTION PROJECT – WASTE TREATMENT PLANT

ENGINEERING SPECIFICATION

FOR

ISSUED BY
RPP-WTP PDC
INIT DATE

Pressure Vessel Design and Fabrication

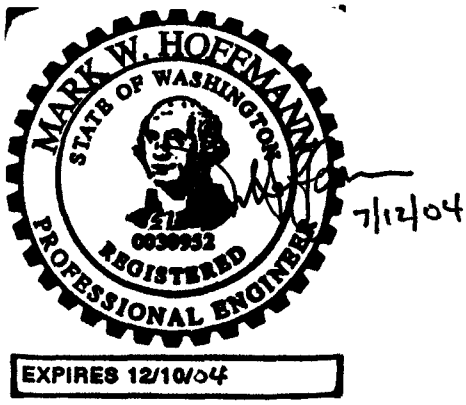

This bound document contains a total of 30 sheets.

Content applicable to ALARA? ☒ **Yes** ☐ **No**

ADR No. N/A

Rev

Quality Designator
QL
DOE Contract No. DE-AC27-01RV14136

NOTE: Contents of this document are Dangerous Waste Permit affecting.

REV	DATE	REASON FOR REVISION	BY	CHECK	REVIEW	QA	APEM/DEM
2	7/12/04	Issued for Permitting Use				N/A	
1	8/13/03	Issued for Permitting Use	Jessica Jackson	Rob Simmons	Cliff Slater	N/A	Mark Hoffmann
0	9/19/02	Issued for Permitting Use	J. Jackson	C. Slater	N/A	N/A	S. Kirk

SPECIFICATION No. 24590-WTP-3PS-MV00-TP001 **Rev** 2

Notice

Please note that source, special nuclear, and byproduct materials, as defined in the Atomic Energy Act of 1954 (AEA), are regulated at the US Department of Energy (DOE) facilities exclusively by DOE acting pursuant to its AEA authority. DOE asserts that, pursuant to the AEA, it has sole and exclusive responsibility and authority to regulate source, special nuclear, and byproduct materials at DOE-owned nuclear facilities. Information contained herein on radionuclides is provided for process description purposes only.

Contents

1 Scope 1
1.1 Description and Location 1
1.2 Definitions 1
1.3 Conflicts 2
1.4 Buyer's Responsibilities 2
1.5 Seller's Responsibilities 2
2 Applicable Documents 2
2.1 General 2
2.2 Codes and Industry Standards 2
2.3 Related Documents 3
2.4 Project Documents 3
3 Design Requirements 4
3.1 Basic Requirements 4
3.2 Loading 4
3.3 Corrosion Allowance 4
3.4 Heads 5
3.5 Supports and Anchors 5
3.6 Nozzles and Manways 5
3.7 Nozzle Loading 6
3.8 Nozzle Reinforcement 7
3.9 Internal Components 8
3.10 External Components 8
4 Materials 9
4.1 General 9
4.2 Pipe Fittings 9
5 Fabrication 10
5.1 General 10
5.2 Layout 11
5.3 Nozzles, Manways, and Reinforcing Pads 11
5.4 Welding Requirements 12
6 Design and NDE Requirements 12
6.1 All Quality Levels 12
6.2 Additional Requirements for Quality Level 1 (QL-1) Vessels 13
6.3 Additional Requirements for Quality Level 2 (QL-2) Vessels 14

6.4 Additional Requirements for Commercial Grade (CM) Vessels 14
6.5 Additional Requirements for Vessels Located in a Black Cell 15
7 Tests and Inspections 15
7.1 Hardness Testing for Austenitic Stainless Steel Components 15
7.2 Nondestructive Examinations 16
7.3 Hydrotests 16
7.4 Leak Tests 17
7.5 Obstruction Test 17
7.6 Final Inspection of Completed Vessel 17
8 Preparation and Shipment 17
8.1 Cleaning 17
8.2 Packaging 18
8.3 Shipping 18
9 Documentation and Submittals 18
10 Quality Assurance 19
10.1 General Requirements 19
10.2 Additional Requirements for QL-1 and QL-2 Vessels 19
11 Revision History (Internal Use Only) 20
11.1 Specification Change Notices 20
11.2 Design Changes Incorporated by Design 20
11.3 Design Changes Incorporated by Reference 20

Appendices

Appendix A Minimum Nozzle Design Loads A-1

1 Scope

1.1 Description and Location

This specification, together with the purchase order and Drawings, covers the requirements for the design, fabrication, and testing of pressure vessels for the Hanford Tank Waste Treatment and Immobilization Plant (WTP) project located in the southeastern part of Washington State.

1.2 Definitions

1.2.1 **MDS**: The Buyer's mechanical data sheet.

1.2.2 **ECDS**: The section of the MDS titled Equipment Cyclic Data Sheet. If components of a vessel are subjected to cyclical loading, those loads will be detailed in the ECDS.

1.2.3 **Drawings**: The Buyer's Drawings include the vessel general outline drawing and any associated standard drawings.

1.2.4 **Quality Level:** Establishes the quality assurance program requirements. For the purposes of this specification, Quality Level also determines allowable nozzle reinforcement methods and nondestructive examination (NDE) requirements. Buyer assigns Quality Levels on the MDS or Drawings.

1.2.5 **Seismic Category:** Classification of vessels defining the required condition, status, and operating function during and after a seismic event. The Seismic Category determines the analysis method and acceptance criteria appropriate for the intended service and safety function of the vessel. Buyer assigns Seismic Category on the MDS.

1.2.6 **Containment:** Components that contain active process fluids inside the plant process system. Refer to the MDS for the containment classification of components.

Primary Confinement – The boundary within which the process fluids, gasses and vapors are contained and confined during the plant process operation. In this document, the entire process vessel and nozzle walls are generally referred to as the Primary Confinement.

Primary Containment – The part of the Primary Confinement that is in contact with the process fluid. This is typically the wetted portion of the vessel wall below the top of the overflow.

Auxiliary Containment – This term is used in this document to identify the portion of a Primary Confinement that is not subject to a static pressure head of liquid but may be in contact with splashing liquid, vapor or gases. This is typically the vessel components above the prescribed high operating liquid level.

Secondary Containment – The boundary that will contain process liquid if the Primary Containment is breached. This boundary will not normally be in contact with the process liquid. Typically, this is the cell liner or wall structure of the facility.

1.2.7 **Black Cell:** Shielded cells for which no maintenance or entry is planned for the 40-year design life of the plant.

1.3 Conflicts

In cases of conflicts between this specification and other drawings or specifications, the Seller shall call attention to the conflict and request an interpretation by the Buyer.

1.4 Buyer's Responsibilities

Process design of the vessel for performance, capacity, or configuration is the Buyer's responsibility, and is not part of this specification.

1.5 Seller's Responsibilities

1.5.1 Seller shall assume complete responsibility for the design, fabrication, testing, inspection, and documentation as required by the Buyer and detailed in the purchase order.

1.5.2 Buyer's review of the Seller's drawings, or release of the vessel for shipment by the Buyer's representative, shall in no way relieve the Seller of the responsibility for complying with all the requirements of this specification and the purchase order.

1.5.3 The Seller shall substantiate any necessary changes to the MDS, Drawings, specifications and purchase order and obtain approval from the Buyer.

2 Applicable Documents

2.1 General

2.1.1 Work shall be in accordance with the referenced codes, standards, and documents listed below, which are integral parts of this specification.

2.1.2 When specific chapters, sections, parts, or paragraphs are listed following a code, industry standard, or reference document, only those chapters, sections, parts, or paragraphs of the document are applicable and shall be applied. When more than one code, standard, or referenced document covers the same topic, the requirements for all must be met with the most stringent governing.

2.2 Codes and Industry Standards

2.2.1 The Seller shall apply the latest issue, including addenda, at the time of request for quote for the following codes and industry standards.

2.2.1.1 ASME Section VIII, Division 1, *Rules for Construction of Pressure Vessels,* American Society of Mechanical Engineers

2.2.1.2 ASME Section II, Part D, *Materials,* American Society of Mechanical Engineers

2.2.1.3 ASME Section V, *Nondestructive Examination,* American Society of Mechanical Engineers

2.2.1.4 NBIC, *National Board Inspection Code*, National Board of Boiler and Pressure Vessel Inspectors

2.2.1.5 WRC-107, *Local Stresses in Spherical and Cylindrical Shells due to External Loading,* Welding Research Council

2.2.1.6 WRC-297, *Local Stresses in Cylindrical Shells due to External Loadings on Nozzles–Supplement to WRC Bulletin No. 107,* Welding Research Council

2.2.1.7 PFI Standard ES-24, *Pipe Bending Methods, Tolerances, Process and Mechanical Requirements*, Pipe Fabrication Institute, Engineering and Fabrication Standard

2.2.2 The Seller shall apply the issue and addenda as referenced in Table U-3 of ASME Section VIII, Division 1 for the following codes and industry standards:

2.2.2.1 ASME B16.5, *Pipe Flanges and Flange Fittings NPS 1/2 through NPS 24*

2.2.2.2 ASME B16.47, *Large Diameter Steel Flanges NPS 26 through NPS 60*

2.2.2.3 SNT-TC-1A, Recommended Practice No. SNT-TC-1A, American Society for Nondestructive Testing, Inc.

2.2.3 The Seller shall apply the issue and addenda as stated for the following codes and industry standards:

2.2.3.1 ASCE 7-98, Minimum Design Loads for Buildings and Other Structures, American Society of Civil Engineers

2.2.3.2 ASME NQA-1, *Quality Assurance Program Requirements for Nuclear Facilities*, 1989 Edition

2.3 Related Documents

Other project specifications, standards, and standard details as listed or referenced in Section 2 of the purchase order shall be used as applicable for the design and fabrication of the vessels.

2.4 Project Documents

2.4.1 24590-WTP-3PS-MV00-TP002, *Engineering Specification for Seismic Qualification Criteria for Pressure Vessels*

2.4.2 24590-WTP-3PS-MV00-TP003, *Engineering Specification for Pressure Vessel Fatigue Analysis*

2.4.3 24590-WTP-3PS-G000-TP002, *Engineering Specification for Positive Material Identification*

2.4.4 24590-WTP-MV-M59T-00001, *Pressure Vessel Tolerances Standard Details*

2.4.5 24590-WTP-3PS-MVB2-T0001, *Engineering Specification for Welding of Pressure Vessel, Heat Exchangers and Boilers*

2.4.6 24590-WTP-3PS-G000-T0001, *General Specification for Supplier Quality Assurance Program Requirements*

2.4.7 24590-WTP-3PS-G000-T0003, *General Specification for Packaging, Shipping, Handling and Storage Requirements*

2.4.8 24590-WTP-SRD-ESH-01-001-02, *Safety Requirements Document Volume II (internal use only)*

3 Design Requirements

3.1 Basic Requirements

3.1.1 Unless otherwise specified, all vessels shall be designed and fabricated in accordance with ASME Section VIII, Division 1, any additional requirements of this specification, MDS, and the referenced Drawings.

3.1.2 Pressure vessels shall be U-stamped and registered with the NBIC. Any exceptions are indicated on the MDS.

3.1.3 Seller shall consider design details and material thickness shown on Drawings and MDS as the minimum requirements.

3.1.4 Seller shall not scale Drawings.

3.2 Loading

3.2.1 Seismic analysis shall be performed per the requirements of 24590-WTP-3PS-MV00-TP002.

3.2.2 If wind or snow loadings are specified on the MDS, the design for such loadings shall be based on the requirements of the ASCE 7, using the indicated wind and snow loading parameters.

3.2.3 If the MDS contains an ECDS, the Seller shall analyze for fatigue per the requirements detailed in the 24590-WTP-3PS-MV00-TP003.

3.2.4 Unless indicated otherwise on the MDS or Drawings, the Seller shall design the vessels to support process liquid filled to the top of the overflow.

3.3 Corrosion Allowance

3.3.1 Corrosion allowance is specified on the MDS and shall be applied to each surface exposed to process vapor or liquid. Internal piping, charge vessels, and pulse jet mixers shall have the specified corrosion allowance applied to both internal and external surfaces.

3.3.2 Unless otherwise specified, corrosion allowance shall not be applied to external vessel surfaces.

3.4 Heads

The Seller shall use head shapes as specified on the vessel drawing. Deviations from this profile may be considered for economic, space or fabrication concerns. Any change, however, requires the approval of the Buyer.

3.5 Supports and Anchors

3.5.1 Seller shall provide vessel supports as illustrated on the Drawings.

3.5.2 Supports and anchors shall be designed to secure the buoyant vessel in case the vessel is empty and submerged to the level indicated in the MDS.

3.6 Nozzles and Manways

3.6.1 Nozzle wall thickness shall be per ASME Section VIII, Division 1 and at least that specified on the Drawings. Seller shall understand that minimum nozzle thicknesses indicated on the Drawings may not support the nozzle loading requirements listed in Appendix A.

3.6.2 Nozzles and manways and their reinforcements located on the head shall be located fully within the crown region of the head unless noted otherwise on the Drawing.

3.6.3 All nozzles shall be set-in type or through type with full penetration welds. All nozzles, which are flush with the inside surface of the vessel, shall be rounded to 1/8 inch minimum radius as shown below. Nozzles for pressure relief devices, vents, and drainage shall be flush with the inside surface of the vessel. Nozzles with internal projection in primary containment shall have an additional fillet weld between the internal projection and the inside surface of the shell or head.

The following illustrates acceptable and unacceptable nozzle configurations and welding:

Acceptable Nozzle Connections

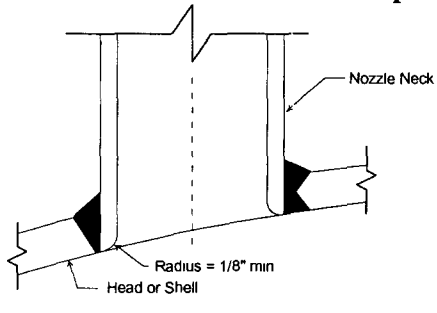

Set-in Nozzle with Full Penetration Weld

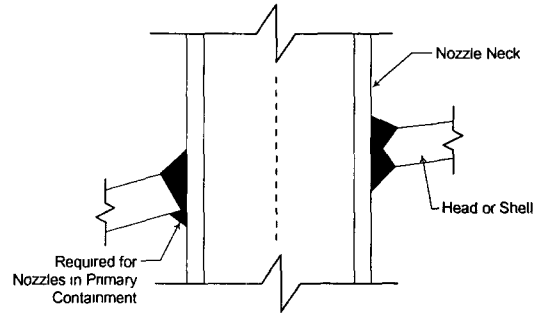

Through Nozzle with Full Penetration Weld

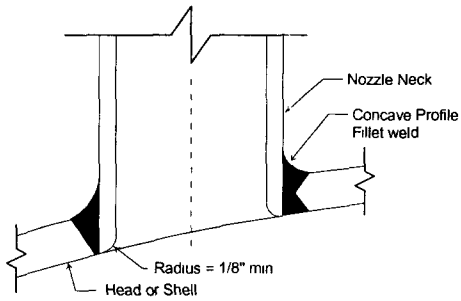

Set-in Nozzle with Full Penetration Weld for Fatigue Service

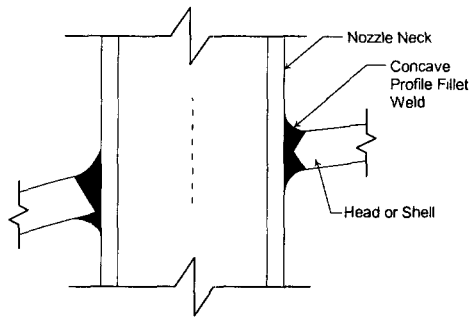

Through Nozzle for Fatigue Service

Unacceptable Nozzle Connections

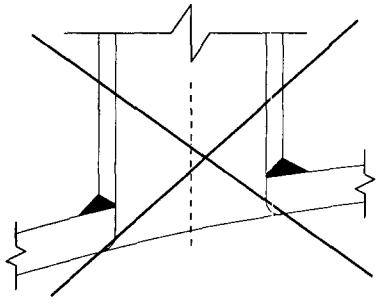

Set-on Nozzle with Full Penetration Weld

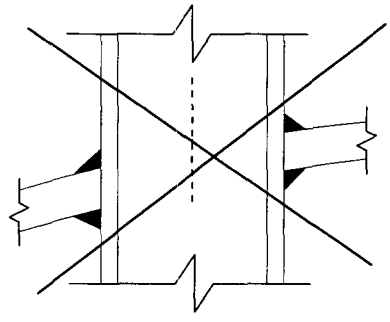

Through Nozzle with Double Fillet Weld

3.6.4 Flange boltholes shall straddle natural vessel centerlines unless otherwise specified.

3.7 Nozzle Loading

3.7.1 Seller shall design nozzles for the minimum nozzle design loads listed in the applicable table of Appendix A for the connected pipe size. Seller shall design nozzles according to the methods of WRC-107, WRC-297, or finite element analysis as applicable.

3.7.2 Appendix A lists minimum design nozzle loads by nozzle size, connecting pipe material, and Seismic Category for weight, seismic, and thermal expansion cases. The coordinate system conforms to the 'right hand rule'. The Y-axis is vertical and in the direction of gravity regardless of the orientation of the nozzle. Loads act at the juncture of the nozzle and shell.

Primary nozzle load combinations to be considered in the design shall be:

Weight + Seismic + Operating Pressure

Secondary nozzle load combinations to be considered in the design shall be:

Primary Loads + Thermal

3.7.3 The nozzle loads provided in these tables are for the piping connected to the external nozzle. If a nozzle projects and is loaded internally to the vessel, design the nozzle for the sum of the internal and external loads.

3.7.4 The nozzle loads due to thermal expansion are estimated based on the operating temperature of 350 °F. If the maximum operating temperature of a pipe is less then 350 °F, the nozzle thermal loads may be reduced by a scale factor of

$$\frac{X-70}{350-70}$$

where X is the maximum operating temperature.

3.8 Nozzle Reinforcement

3.8.1 When required, suitable nozzle reinforcements must be provided. Reinforcement methods are limited depending on the assigned Quality Level and cell designation. Refer to section 6 for allowable reinforcement methods. If the wall thickness of the nozzle neck is greater than that of the connecting piping, the requirements of ASME Section VIII, Division 1, Figure UW-13.4 shall be satisfied.

3.8.2 Nozzle reinforcing pads, where permitted, shall have one-piece construction. Pad thickness shall not exceed 1.5 times the thickness of the penetrated shell. To meet nozzle loading requirements, pad diameter may exceed the limits of reinforcement per ASME Section VIII, Division 1. Pad width shall be at least 2 inches but shall not exceed ten times the thickness of the pad. Each pad shall have one 1/8 inch nominal pipe size (NPT) telltale hole for testing purposes. On completion of all fabrication activities, the hole shall be fitted with a screwed plug of the same material as the reinforcement plate.

3.8.3 The following illustrates acceptable reinforcement practices for nozzles irrespective of Quality Level:

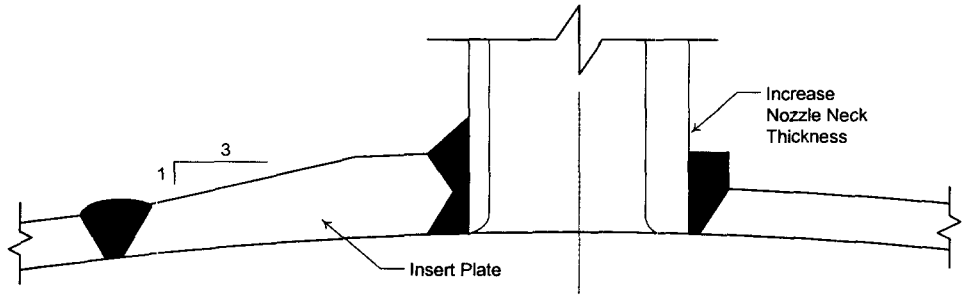

Nozzle Reinforcement Methods
for All Quality Levels

3.8.4 Nozzles on Commercial Grade vessels not located in a black cell may use external reinforcing pads. As a warning, the nozzle loads specified in Appendix A may exceed the practical use of repads. In such cases, the Seller should consider locally increasing the thickness of the shell or head with an insert plate or increasing the nozzle neck thickness as required. The following illustrates acceptable reinforcing practices for nozzles on Commercial Grade vessels not located in a black cell:

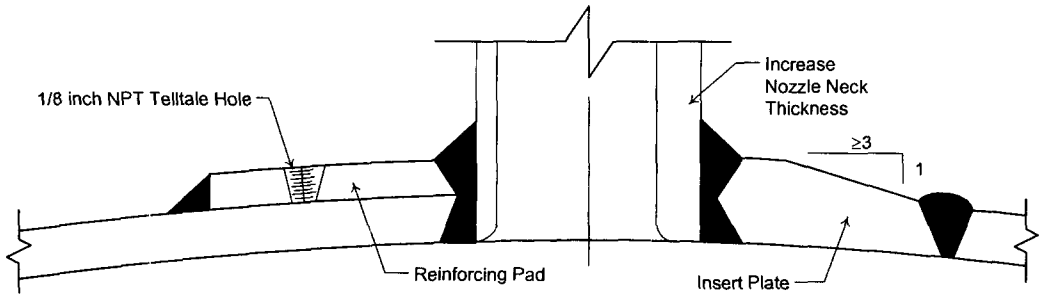

Nozzle Reinforcement Methods
Only for Commercial Grade Vessels
Not Located in a Black Cell 2

3.9 Internal Components

3.9.1 Design of support members for vessel internals shall be the responsibility of the Seller. For pulse jet mixers, charge vessels, and their supports, the Seller shall submit a preliminary layout for review prior to detail design.

3.9.2 Seller shall design support members to avoid the column of space directly below the manway.

3.9.3 The design of internal supports shall consider stresses caused by differential thermal expansion.

3.10 External Components

3.10.1 If the MDS specifies insulation, the Seller shall provide and install insulation supports per the Drawings.

3.10.2 Lifting and tailing lugs shall be provided and installed by the Seller per the Drawings. The Seller may propose alternate designs and submit for Buyer approval prior to detail design.

3.10.3 The Seller is responsible for determining the necessity of stiffening rings. The material shall match the material of the shell and attachment welds shall be continuous on both sides of the ring.

3.10.4 If specified on the Drawings, Seller shall provide and install support clips for piping or platforms. The materials welded to the shell shall match the material of the shell.

3.10.5 If indicated on the Drawings, Seller shall provide and install grounding lugs.

3.10.6 Seller shall provide all vessels with a nameplate of Type 300 stainless steel attached securely on a bracket welded to the vessel at the location indicated on the Drawings. The bracket shall

be the same material type as the adjoining vessel shell. The nameplate shall be in accordance with the specified Drawing.

3.10.7 The base of the vertical vessel support skirt shall be marked, using a line of welding bead, at the 0 degree orientation as shown on the Drawings.

3.10.8 If a separate ring beam support is specified on the vessel drawing, the top flange shall be marked, using a line of welding bead, at the 0 degree orientation as shown on the Drawings.

4 Materials

4.1 General

4.1.1 Materials shall be new and free from defects. Classification of fabrication materials shall be in accordance with ASME Section II, Part D. The Seller shall furnish legible copies of the mill test reports from the manufacturer for materials comprising the Primary Confinement, supports, and welded attachments. Other materials shall be provided with certified statements that the material meets the requirements of ASME Section II, Part D.

4.1.2 Material shall be furnished to the specification and grade shown on the MDS. The fabricator shall not substitute materials without written approval from the Buyer.

4.1.3 Contact materials including marking materials, temperature indicating crayons, adhesive backed and pressure sensitive tape, and barrier and wrap materials may be used only under the following limits:

- The total halogen content shall not exceed 200 parts per million (PPM)
- The total sulfur content shall not exceed 400 PPM
- No intentionally added low melting point metals such as lead, zinc, copper, tin, antimony and mercury.

Anti spatter compounds shall not contain chlorine, fluorine, sulfur, mercury or other low melting point metals.

Materials and residue shall be completely removed when no longer required. Cleaning materials may be non-halogenated solvents or potable water containing no more than 50 PPM chloride. Contact materials shall be controlled and documented in accordance with the Seller's inspection and test plan as approved by the Buyer.

4.1.4 Seller shall maintain a positive system of identification of materials used in the fabrication of each vessel per 24590-WTP-3PS-G000-TP002.

4.2 Pipe Fittings

Pipe fittings shall conform to the appropriate ASME and ANSI standards for materials and dimensions unless otherwise stated in the purchase order.

5 Fabrication

5.1 General

5.1.1 Seller shall, if necessary, provide temporary stiffening and jigging to prevent shell distortion during fabrication, welding processes, heat treatment, hydrostatic testing, or shipment.

5.1.2 Fabrication tolerances shall be in accordance with ASME Section VIII, Division 1 and standard drawing 24590-WTP-MV-M59T-00001.

5.1.3 The sequence of fabrication shall be planned to permit maximum access to the internal surfaces to enable examination of all welds.

5.1.4 Plates and pipes shall be cut to size and shape by machining, grinding, shearing, plasma, laser, or water jet cutting. Plates, 3/8 inch thick and above, cut by shearing, shall either be dye penetrant tested on the sheared edge or have 3/8 inch allowance left on the edges which shall be removed by machining or grinding. All thickness of plate or pipe cut by air plasma cutting shall have the edges dressed to a smooth, bright finish. Material cut by the inert gas shielded plasma, laser or water jet process will not require further dressing other than deburring. All lubricants, burrs, and debris shall be removed after cutting.

5.1.5 All stamps used for identification reference markings shall be of the low stress type. Stampings shall not be located near discontinuities.

5.1.6 If a butt welded seam is required between materials of different thickness, the thicker material shall normally be machined on the side away from the process liquid. Machining shall ensure a smooth finished profile with no sharp corners and shall be in accordance with ASME Section VIII, Division 1.

5.1.7 When rolling any austenitic stainless plate, care shall be taken to prevent carbon pickup or contamination of rolled material. The work area shall be free of carbon steel grindings and general cleanliness shall be maintained to preclude carbon contamination.

5.1.8 Only stainless steel brushes, clean iron-free sand, ceramic or stainless steel grit shall be used for cleaning stainless steel or nonferrous alloy surfaces. Cleaning tools or materials shall not have been previously used on carbon steel.

5.1.9 Internal piping bends shall have a center line radius of four times the pipe nominal diameter. In confined spaces, the centerline radius may be reduced to three times the outside diameter of the pipe. The pipe shall not be terminated or butt welded within the bend, a straight length of 4 inches is recommended.

5.1.10 Pipe bending methods, tolerances, processes, and material requirements shall comply with PFI Standard ES-24 and require Buyer's approval. These requirements shall apply equally to tube bending processes.

5.2 Layout

5.2.1 Plate size shall be chosen to minimize welding. For horizontal vessels, the longitudinal seams in cylindrical shells and conical heads, shall be located above the specified normal operating level, where practical. Longitudinal seams shall be completed before welding any adjoining circumferential seam.

5.2.2 The longitudinal seams of adjacent shell courses shall be staggered by a minimum length (measured from the toe of the welds) of 5 times the plate thickness, or 4 inches whichever is greater. Where it is considered impractical to meet this requirement, Seller shall submit a proposed layout to the Buyer for approval.

5.2.3 For large diameter formed heads, where two or more plates are butt welded prior to forming, the butt welds shall be located such that the weld in the knuckle region is minimized.

5.2.4 Saddles shall be continuously welded to the shell. Welded seams under the saddle or wear plate are not permitted. Longitudinal weld seams in the shell should not be located within 15 degrees of the horn of the saddle or wear plate.

5.2.5 Plate layouts shall be arranged so that longitudinal and circumferential weld seams clear all nozzles, manways, and their reinforcing pads to the maximum extent possible. A minimum clearance of eight times the plate thickness from the toes of the welds is required. Where it is considered impractical to meet this requirement, Seller shall submit a proposed layout to the Buyer for approval.

5.2.6 Structural attachment welds such as internal support rings or clips, external stiffening rings, insulation support rings, and ladder, platform or pipe support clips shall clear weld seams by a minimum of 2 inches. If overlap of pad type structural attachments and weld seams is unavoidable, the portion of the seam to be covered shall be ground flush and radiographically examined before the attachment is welded. The seam shall be radiographed per ASME Section VIII, Division 1, Paragraph UW-51 for a minimum distance of 2 inches beyond the edge of the overlapping attachment. Radiographic examination of longitudinal weld seams is not required when single plate edge type attachments such as tray support rings, stiffening rings, insulation support rings, ladder, platform, or pipe support clips cross such weld seams.

5.3 Nozzles, Manways, and Reinforcing Pads

5.3.1 For forged nozzles connecting to pipe of lesser wall thickness, the Seller shall prepare the nozzles per ASME Section VIII, Division 1 Figure UW-13.4.

5.3.2 If a manway is specified with a welded cover, the cover shall be tack welded to the manway neck, prepared for field welding to the manway neck, sealed to prevent dirt and water from entering the vessel using adhesive tape which meets the contact material requirements. The cover shall be marked with the plant item number of the vessel.

5.3.3 Nozzles to be butt welded to connecting pipe shall be prepared for field welding and fitted with a plastic or rubber protective cover and sealed to prevent dirt and water from entering the vessel using adhesive tape which meets the contact material requirements.

5.4 Welding Requirements

5.4.1 Seller shall comply with 24590-WTP-3PS-MVB2-T0001.

5.4.2 All welding shall be continuous. Stitch welding is prohibited.

5.4.3 Joints shall be assembled and retained in position for welding. The use of manipulators or other devices to permit welding in the flat position should be employed where practical.

5.4.4 All attachments such as lugs, brackets, nozzles, pads and reinforcements around openings and other members (when permitted) shall follow the contour and shape of the surface to which they will be attached. The gap at all exposed edges to be welded shall not exceed the greater of 1/16 inch or one-twentieth of the thickness of the attachment at the point of attachment.

5.4.5 Where fillet welds only are used, the maximum gap between the components being joined shall be 1/8 inch. The components shall be clamped or otherwise maintained together during welding.

5.4.6 Attachment point of spiders, braces, or other temporary attachments shall match the material of the vessel.

5.4.7 All temporary attachments shall be removed prior to shop hydrotest unless specifically approved by the Buyer.

5.4.8 If indicated on Drawings, the internal surface of the head or shell subjected to direct impingement of process fluid shall be protected by a wear plate. See the MDS for the wear plate material. The erosion and corrosion prevention and mitigation features identified in the 24590-WTP-SRD-ESH-01-001-02, Appendix H (SRD), are included in the design of the vessels. The Buyer is providing applicable SRD requirements to the Seller via purchase order documents, including this specification, the MDSs, and Drawings.

5.4.9 Where practical, internal structural component welds shall be full penetration. Fillet welded attachments are subject to approval by the Buyer.

6 Design and NDE Requirements

6.1 All Quality Levels

6.1.1 The shell and head sections which are subjected to concentrated or large loads through welded attachments (such as lifting and tailing lugs or agitator mountings) shall, prior to welding, be ultrasonically examined over 100 percent of the areas, in accordance with the following:

- For connections or attachments directly welded to the shell or head, the area tested shall extend 3 inches beyond the extremity of the proposed weldment
- For connections or attachments welded via a reinforcement or doubler plate, the shell area tested shall extend 5 inches beyond each side of the perimeter of the proposed fillet weld attaching the reinforcing or doubler plate to the shell or head

6.1.2 All full penetration welds attaching internal or external structural components to the heads or shell shall be ultrasonically tested. If fillet welds are permitted by the Buyer and are not readily ultrasonically tested, they may be dye-penetrant tested with approval from the Buyer.

6.1.3 All full penetration welds forming part of the jacket shall be ultrasonically tested.

6.1.4 Records of the NDE and other tests shall be submitted to the Buyer as described in the purchase order.

6.1.5 All welds joining the nozzle neck to the shell or heads, which are not radiographically or ultrasonically tested shall be dye penetrant tested.

6.2 Additional Requirements for Quality Level 1 (QL-1) Vessels

6.2.1 All nozzle reinforcement on QL-1 vessels shall be integral. Using additional reinforcing elements such as reinforcing rings or pads is prohibited. Reinforcing material shall be taken as excess thickness on the shell or head and nozzle neck. Additional reinforcing material may be provided, when required, by increasing the shell, head or nozzle thickness, or by providing a thicker insert plate of a suitable diameter, butt welded into the shell or the head.

6.2.2 The following weldments shall be subject to volumetric testing:

- All welds forming part of the primary containment, including weldments joining nozzles to the vessel shell or head. Where it is considered impractical to perform radiographic examination due to joint configuration, the Seller may propose ultrasonic examinations.
- Where a main seam butt weld is located such that only part of its length lies within the primary containment, the complete length of that particular seam
- All butt welds in internal piping
- For multi-chambered vessels, where an adjacent chamber is categorized other than QL-1, all interconnecting butt welds which provide primary containment between the two chambers to QL-1 requirements
- For vessels fitted with a shell-type jacket, all primary containment welds in the main shell enclosed by the jacket and found satisfactory prior to fitting the jacket and associated rings

Radiography is the preferred method of volumetric testing. Where it is considered impractical to perform radiographic examination due to joint configuration, the Seller may propose ultrasonic examinations.

6.2.3 Where components attach to any part of the vessel by full or partial penetration tee weld (including a corner weld), the parent plate in the vicinity of the weld shall be ultrasonically tested prior to welding, to ensure that no defects are present that could result in laminar type tearing during welding.

In particular, the following components shall always be examined as detailed above:

- Supports for vessel internals
- Vessel supports where a small local area of the vessel takes the support load (ultrasonic inspection is not required for skirt or ring supported vessels)

6.3 Additional Requirements for Quality Level 2 (QL-2) Vessels

6.3.1 All nozzle reinforcement on QL-2 vessels shall be integral. Using additional reinforcing elements, such as reinforcing rings or pads, is prohibited. Reinforcing material shall be taken as excess thickness on the shell or head and nozzle neck. Additional reinforcing material may be provided, when required, by increasing the shell, head or nozzle thickness, or by providing a thicker insert plate of a suitable diameter, butt welded into the shell or the head.

6.3.2 The following weldments shall be subject to volumetric testing:

- At least 10 percent of the length of each welders production of welds forming part of the primary containment. The minimum extent of radiography shall include all "T" junctions, and 10 percent of the remaining longitudinal weld with a 6 inches minimum length of radiography.
- For nozzle-to-shell welds located in the primary containment, at least 10 percent of the number of welds made by each welder over 100 percent of its circumference, with a minimum of one nozzle to shell weld per vessel. Where it is considered impractical to perform radiographic examination due to joint configuration, the Seller may propose ultrasonic examinations.
- All butt welds in internal piping

Radiography is the preferred method of volumetric testing. Where it is considered impractical to perform radiographic examination due to joint configuration, the Seller may propose ultrasonic examinations.

6.3.3 Where components attach to any part of the vessel by full or partial penetration tee weld (including a corner weld), the parent plate in the vicinity of the weld shall be ultrasonically tested prior to welding, to ensure that no defects are present that could result in laminar type tearing during welding.

In particular, the following components shall always be examined as detailed above:

- Supports for vessel internals.
- Vessel supports where a small local area of the vessel takes the support load (ultrasonic inspection is not required for skirt or ring supported vessels)

6.4 Additional Requirements for Commercial Grade (CM) Vessels

6.4.1 Nozzles may use either a pad or integral reinforcement.

6.4.2 The following weldments shall be subject to volumetric testing unless otherwise indicated on the MDS or Drawings:

- At least 10 percent of the length of each welder's production of vessel main seam butt welds. The minimum extent of radiography shall include all "T" junctions and 10 percent of the remaining longitudinal weld with a 6 inches minimum length of radiograph.
- For nozzle-to-shell welds located in the primary containment, at least 10 percent of the number of welds made by each welder over 100 percent of its circumference. If it is considered impractical to perform radiographic examination due to joint design, the Seller may propose ultrasonic examination for the Buyer's approval.

- At least 10 percent of butt welds in internal piping for the full circumference.

Radiography is the preferred method of volumetric testing. Where it is considered impractical to perform radiographic examination due to joint configuration, the Seller may propose ultrasonic examinations.

6.5 Additional Requirements for Vessels Located in a Black Cell

6.5.1 If a vessel is located in a Black Cell, it shall be noted on the MDS.

6.5.2 All nozzle reinforcement shall be integral regardless of Quality Level. Using additional reinforcing elements, such as reinforcing rings or pads, is prohibited. Reinforcing material shall be taken as excess thickness on the shell or head and nozzle neck. Additional reinforcing material may be provided, when required, by increasing the shell, head or nozzle thickness, or by providing a thicker insert plate of a suitable diameter, butt welded into the shell or the head.

6.5.3 All welds joining components of the Primary Confinement shall be subject to full volumetric testing. Radiography is the preferred method of volumetric testing. Where it is considered impractical to perform radiographic examination due to joint configuration, the Seller may propose ultrasonic examinations.

6.5.4 As a minimum, all welds on internal components and supports shall be dye-penetrant tested.

7 Tests and Inspections

7.1 Hardness Testing for Austenitic Stainless Steel Components

7.1.1 Hardness testing is required when austenitic stainless steel plate is cold formed to make sections such as angles and channels. This requirement is not applicable to the cold forming of dished heads, which is covered by the relevant section of ASME Section VIII, Division 1.

7.1.2 Hardness testing is required when austenitic stainless steel pipe is cold formed for bends with a centerline radius less than three times the nominal pipe diameter.

7.1.3 Any cold forming process, which may significantly increase hardness, shall be in accordance with an approved procedure, which contains hardness testing. The procedure shall be submitted for Buyer's approval.

7.1.4 Hardness testing shall be performed on areas subject to the greatest deformation after cold working or any rework or rectification. The maximum permitted hardness is HRB 92.

7.1.5 If the maximum permitted hardness is exceeded, the Seller shall solution anneal in accordance with the applicable ASME specification for that material. Seller shall submit a written procedure for suitable heat treatment and testing for Buyer's approval.

7.2 Nondestructive Examinations

7.2.1 Radiography, ultrasonic testing, and dye penetrant examination, where specified or required, shall be performed in accordance with ASME Section VIII, Division 1 and ASME Section V.

7.2.2 All mandatory nondestructive examination (visual, surface flaw, and radiography) of vessel shall be carried out after the completion of fabrication, including any heat treatment. Where Seller carries out additional nondestructive examination prior to any heat treatment process, such examinations shall be included in the Quality Plan or Inspection Schedule. The Buyer's representative need not witness this additional nondestructive examination; however, the records of such inspection shall be made available to the Buyer's representative.

7.2.3 Nondestructive examination must be performed by an inspector certified to the requirements of SNT-TC-1A. The interpretation of the results shall be by either Level II or Level III inspectors certified to SNT-TC-1A.

7.2.4 Ultrasonic testing, where specified by the Buyer or proposed by the Seller, shall be in accordance with Appendix 12 of ASME Section VIII, Division 1.

7.2.5 Radiographic acceptance criteria shall be in accordance with ASME Section VIII, Division 1, Paragraph UW-51 where full radiography is required or UW-52 where spot radiography is required.

7.2.6 Deleted

7.3 Hydrotests

7.3.1 If paint is specified, the vessel shall not be painted prior to the pressure test.

7.3.2 All welds shall be sufficiently cleaned and free of scale or paint prior to hydrostatic testing.

7.3.3 Testing of vessels or components made of austenitic stainless steel materials shall be conducted with potable water containing no more than 50 PPM chloride.

7.3.4 For vessels of carbon and low alloy steel, before application of the test pressure, the test water and the vessel material shall be allowed to equalize to approximately the same temperature. The temperature of the pressure resisting components during the pressure test, regardless of test media, shall be at least 30 °F warmer than the minimum design metal temperature to be stamped on the nameplate, but need not exceed 120 °F.

7.3.5 The final hydrostatic test pressure shall be held for a minimum of one hour.

7.3.6 After completion of the hydrostatic test, the vessel shall be drained, dried, cleaned thoroughly inside and outside to remove grease, loose scale, rust, and dirt and closed as quickly as practicable. Test water shall not be in contact with austenitic stainless steel for more than 72 hours, unless treated with an appropriate biocide.

7.3.7 If field assembly or erection is involved, the final hydrostatic test shall be at the job site. The Seller or the field subcontractor shall provide the Buyer with a detailed test procedure for review and approval prior to testing.

7.3.8 A horizontal vessel shall be tested while resting on its support saddles without additional supports or cribbing.

7.3.9 Tall vertical vessels may be shop hydrotested in the horizontal position. The vessel shall be designed for vertical hydrotest loading. These vessels must be adequately supported during the hydrotest to prevent damage.

7.3.10 Each chamber of a multi-chamber vessel (jacketed vessel) shall be subject to a hydrotest pressure with atmospheric pressure in the adjacent chamber.

7.4 Leak Tests

7.4.1 If gas or pneumatic testing is specified in the MDS, Drawings or in the purchase order, the Seller shall conduct the tests in accordance with ASME Section V.

7.4.2 Reinforcing pad attachment welds and accessible surfaces of inside nozzle to vessel wall welds shall be tested for leaks with 15 PSIG dry air or nitrogen and bubble forming solution. This test shall be performed prior to the final hydrostatic or pneumatic test as applicable.

7.5 Obstruction Test

Seller shall ensure and document that all internals, internal piping, and jacketing are free from obstructions.

7.6 Final Inspection of Completed Vessel

Final inspection of the completed vessel shall be the sole responsibility of the Seller. The finished dimensions and cleanliness of the vessels shall comply with the relevant Drawings and specifications after completion of all tests.

8 Preparation and Shipment

8.1 Cleaning

8.1.1 Seller shall comply with 24590-WTP-3PS-G000-T0003.

8.1.2 If specified in the purchase order and in any event following hot working or heat treatment, the equipment shall be descaled. The procedure to be used by Seller shall be submitted for Buyer's prior approval.

8.1.3 If blast (mechanical) descaling process is specified in the purchase order for stainless steel construction, clean and iron-free glass or ceramic beads, or sand of alumina or zirconia type shall be used. The type, grade, and chemical composition of the abrasive shall be submitted for Buyer's approval prior to its use. Recycling of abrasive is prohibited. Blast cleaning shall not be used on weld metal or as a final finish on fabrications.

8.2 Packaging

8.2.1 Machined carbon steel surfaces, which are not protected by blind flanges, shall be coated with rust preventative. Rust preventative coating shall be approved by Buyer.

8.2.2 All flanged openings, which are not provided with a cover, shall be protected by an ASME B16.5 or B16.47 carbon steel blind flange of the same rating as the flange, a full faced rubber gasket with a minimum thickness of 1/8 inch and carbon steel bolts with stainless steel washers.

8.2.3 For internal parts, suitable supports shall be provided to avoid damage during shipment. Temporary internal bracing shall be painted yellow and a label, located near the nameplate shall state that the vessel contains temporary bracing that must be removed.

8.2.4 Small parts, which are to be shipped loose, shall be bagged or boxed and marked with the order and plant item number of the vessel.

8.3 Shipping

8.3.1 Seller shall take all necessary precautions in loading by blocking and bracing the vessel and furnishing all necessary material to prevent damage.

8.3.2 The Seller shall verify, by calculation, that the vessel and internals will withstand loads occurring during shipping for the chosen mode of transportation. The Buyer shall inform the Seller of the chosen mode of transportation.

9 Documentation and Submittals

9.1 Seller shall comply with the requirements of forms G321-E and G321-V of the material requisition or Exhibit I, Attachment A, B and C of the subcontract, as applicable. Furnish all applicable drawings, design calculations, reports of special analyses, welding procedure specifications with procedure qualification records, test procedures, and all other required documents.

9.2 Design calculations shall include relevant ASME Section VIII, Division 1 formulas and source paragraphs, values used in the formulas, the calculated results and comparison with acceptable values. Where calculations are based on other than the ASME Section VIII, Division 1 formulas, the source of the formulas shall be referenced. Where a computer program is used for calculations, a brief program description shall be given, including name and version of the program. If the program is not commercially available to industry, Seller shall maintain and provide, upon request, program documentation. Calculations shall include, but not be limited to:

- Code calculations
- Seismic calculations including base horizontal seismic force and moment and loads for anchorage and anchor bolt design
- Support calculations including empty weight, operating weight and location of center of gravity
- Calculations associated with lifting and erection of the vessel

- Nozzle load analysis for local and gross effect, per WRC-107, WRC-297 or by other approved method
- Design of attachments, both internal and external
- Thermal and discontinuity stresses as applicable
- Fatigue analysis as applicable for vessels in fatigue services

9.3 Seller shall make a complete set of Buyer approved drawings and other documents available to the Buyer's representative at the time the quality surveillance activities are being conducted.

9.4 All records pertaining to the nondestructive examination, base materials, filler materials, fabrication, and inspection shall be traceable to the area and part inspected and be accessible for Buyer's examination.

9.5 Seller shall provide certified copies of the test reports including ASME Section VIII, Division 1 data reports as specified in the purchase order.

10 Quality Assurance

10.1 General Requirements

10.1.1 The Seller's quality assurance program (QAP) requirements are included in 24590-WTP-3PS-G000-T0001.

10.1.2 Seller's QAP manual shall be submitted to buyer for review in accordance with 24590-WTP-3PS-G000-T0001.

10.1.3 Seller's QAP, as a minimum, shall contain the requirements detailed in the Supplier Quality Assurance Program Requirements Data Sheets listed in section 2 of the material requisition.

10.2 Additional Requirements for QL-1 and QL-2 Vessels

10.2.1 Seller shall have in place a QA program meeting the requirements of ASME NQA-1, marked as applicable in Supplier Quality Assurance Program Requirements Data Sheet attached to the material requisition, and 24590-WTP-3PS-G000-T0001.

10.2.2 The successful bidder must pass a pre-award survey by the Buyer. Seller shall demonstrate that its quality program is in compliance with the procurement quality requirements listed in the Supplier Quality Assurance Program Requirements Data Sheet.

10.2.3 All items shall be manufactured in accordance with the Seller's Quality Assurance Program that meets the requirements of ASME NQA-1, and has been previously evaluated and accepted by the RPP-WTP Quality Organization.

10.2.4 Seller shall submit their QAP and work plan to Buyer for review prior to commencement of work. The plan shall include documents and procedures to implement the work and include a matrix of essential quality assurance elements cross-referenced with the documents and procedures.

11 Revision History (Internal Use Only)

11.1 Specification Change Notices

- 24590-WTP-3PN-MV00-00001
- 24590-WTP-3PN-MV00-00002
- 24590-WTP-3PN-MV00-00005
- 24590-WTP-3PN-MV00-00006
- 24590-WTP-3PN-MV00-00007
- 24590-WTP-3PN-MV00-00008

11.2 Design Changes Incorporated by Design

- 24590-WTP-SDDR-PROC-02-0145
- 24590-WTP-SDDR-PROC-02-0155
- 24590-WTP-SDDR-PROC-02-0183
- 24590-WTP-SDDR-PROC-03-0023
- 24590-WTP-SDDR-PROC-03-0053
- 24590-WTP-SDDR-PROC-03-0075
- 24590-WTP-SDDR-PROC-03-0082
- 24590-WTP-SDDR-PROC-03-0083
- 24590-WTP-SDDR-PROC-03-0086
- 24590-WTP-SDDR-PROC-03-0100

11.3 Design Changes Incorporated by Reference

- 24590-WTP-SDDR-PROC-02-0128
- 24590-WTP-SDDR-PROC-02-0136
- 24590-WTP-SDDR-PROC-02-0182
- 24590-WTP-SDDR-PROC-03-0020
- 24590-WTP-SDDR-PROC-03-0066
- 24590-WTP-SDDR-PROC-03-0076
- 24590-WTP-SDDR-PROC-03-0157
- 24590-WTP-SDDR-PROC-03-0168
- 24590-WTP-SDDR-PROC-03-0169
- 24590-WTP-SDDR-PROC-03-0226
- 24590-WTP-SDDR-PROC-03-0240
- 24590-WTP-SDDR-PROC-03-0242
- 24590-WTP-SDDR-PROC-03-0255
- 24590-WTP-SDDR-PROC-03-0263
- 24590-WTP-SDDR-PROC-03-0285
- 24590-WTP-SDDR-PROC-04-00130
- 24590-WTP-SDDR-PROC-04-00184
- 24590-WTP-SDDR-PROC-04-00201
- 24590-WTP-SDDR-PROC-04-00216
- 24590-WTP-SDDR-PROC-04-00411

- 24590-WTP-NCR-CON-03-077
- 24590-WTP-NCR-CON-03-202
- 24590-WTP-NCR-CON-04-0080
- 24590-WTP-FCR-M-03-045
- 24590-WTP-FCR-M-03-062

Appendix A
Minimum Nozzle Design Loads

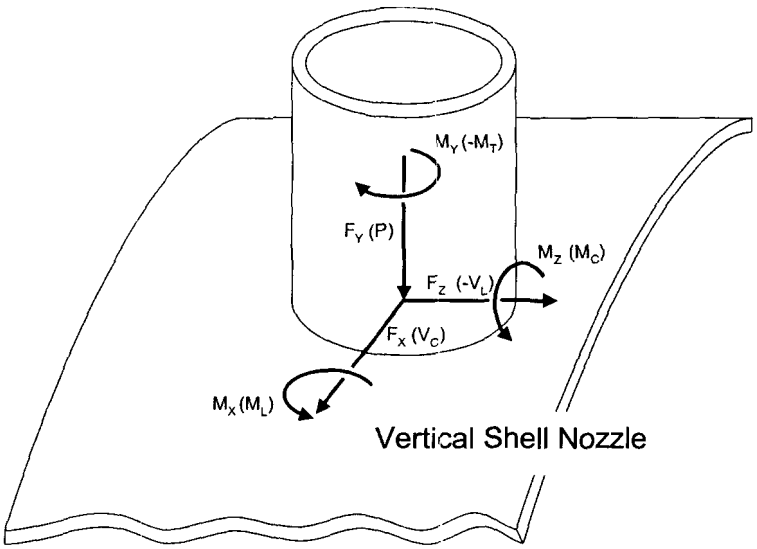

Vertical Shell Nozzle

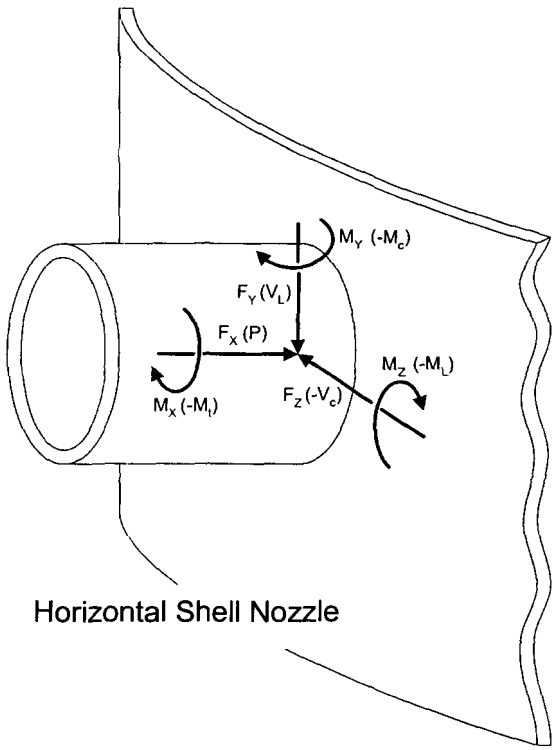

Horizontal Shell Nozzle

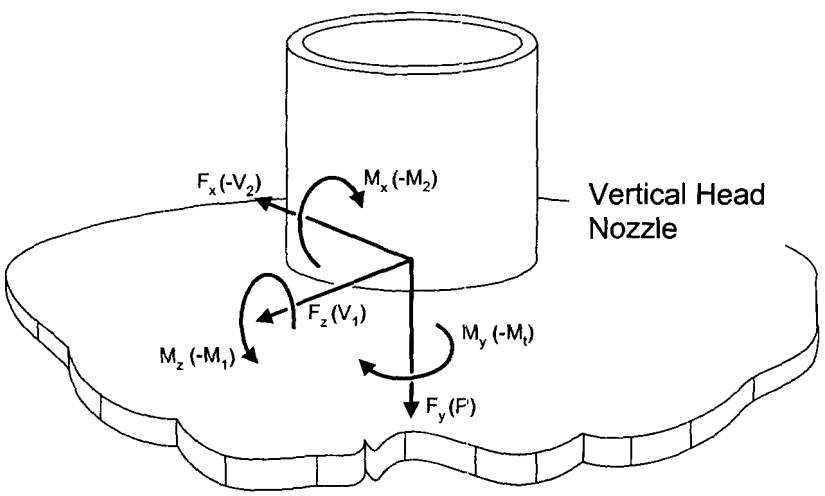

Vertical Head Nozzle

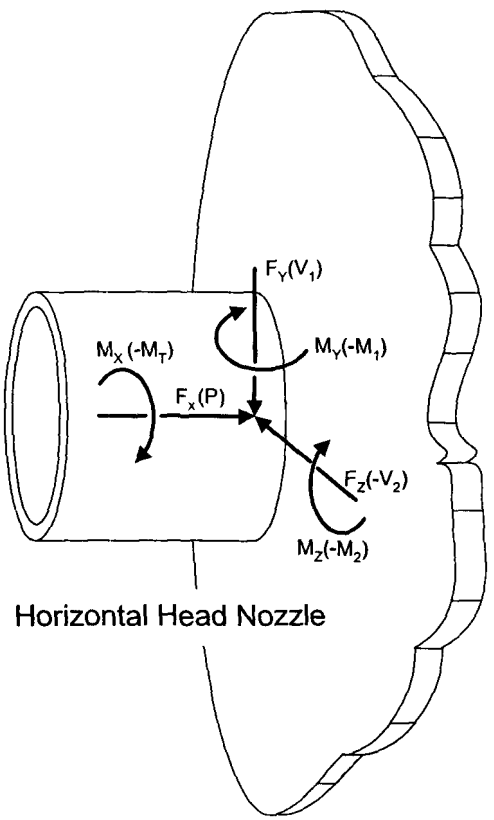

Horizontal Head Nozzle

Table A1- Minimum Nozzle Loads Due to Stainless Steel Piping on Vessels Designated as SC-I

Pipe Size	Load Type	Forces			Moments		
		Fx (lb)	Fy (lb)	Fz (lb)	Mx (ft-lb)	My (ft-lb)	Mz (ft-lb)
1 in	Weight	10	16	10	10	6	6
	Seismic	30	20	30	37	55	55
	Thermal	30	26	40	38	77	77
1-1/2 in	Weight	20	32	20	24	15	15
	Seismic	60	40	60	91	137	137
	Thermal	64	56	86	96	192	192
2 in	Weight	36	56	36	42	26	26
	Seismic	106	70	106	158	237	237
	Thermal	114	100	152	169	337	337
3 in	Weight	69	111	69	158	99	99
	Seismic	215	143	215	623	934	934
	Thermal	228	203	305	664	1330	1330
4 in	Weight	116	186	116	288	180	180
	Seismic	365	243	365	1170	1760	1760
	Thermal	393	350	524	1260	2520	2520
6 in	Weight	279	446	279	797	498	498
	Seismic	884	590	884	3230	4850	4850
	Thermal	980	872	1310	3580	7160	7160
8 in	Weight	311	497	311	988	618	618
	Seismic	978	653	978	3930	5890	5890
	Thermal	1190	1060	1590	4800	9590	9590
10 in	Weight	351	561	351	1880	1180	1180
	Seismic	1090	728	1090	7340	11000	11000
	Thermal	1270	1130	1690	8500	17000	17000
12 in	Weight	485	776	485	2710	1700	1700
	Seismic	1510	1010	1510	10500	15800	15800
	Thermal	1780	1580	2370	12400	24800	24800
14 in	Weight	581	930	581	3320	2080	2080
	Seismic	1800	1200	1800	12600	18900	18900
	Thermal	2140	1900	2860	15000	30100	30100
16 in	Weight	729	1170	729	4170	2610	2610
	Seismic	2280	1520	2280	16100	24200	24200
	Thermal	2800	2490	3730	19800	39500	39500
18 in	Weight	911	1460	911	5070	3170	3170
	Seismic	2820	1880	2820	20000	29900	29900
	Thermal	3550	3160	4730	25200	50300	50300
20 in	Weight	1120	1790	1120	6310	3950	3950
	Seismic	3400	2270	3400	23900	35800	35800
	Thermal	4440	3950	5920	31200	62400	62400
22 in	Weight	1340	2150	1340	7300	4560	4560
	Seismic	4030	2690	4030	28100	42200	42200
	Thermal	5430	4830	7240	37900	75800	75800
24 in	Weight	1570	2510	1570	8510	5320	5320
	Seismic	4710	3140	4710	32400	48700	48700
	Thermal	6560	5840	8750	45200	90400	90400

Table A2- Minimum Nozzle Loads Due to Stainless Steel Piping on Vessels Designated as SC-II, III, and IV

Pipe Size	Load Type	Forces			Moments		
		Fx (lb)	Fy (lb)	Fz (lb)	Mx (ft-lb)	My (ft-lb)	Mz (ft-lb)
1 in	Weight	10	16	10	11	7	7
	Seismic	66	44	66	92	137	137
	Thermal	28	24	38	38	77	77
1-1/2 in	Weight	20	32	20	26	16	16
	Seismic	138	92	138	228	342	342
	Thermal	58	52	78	96	192	192
2 in	Weight	34	56	34	46	29	29
	Seismic	244	162	244	398	597	597
	Thermal	104	92	138	169	337	337
3 in	Weight	71	113	71	180	112	112
	Seismic	491	327	491	1570	2350	2350
	Thermal	209	185	278	664	1330	1330
4 in	Weight	120	192	120	342	214	214
	Seismic	834	557	834	2960	4440	4440
	Thermal	356	317	474	1260	2520	2520
6 in	Weight	290	462	290	951	595	595
	Seismic	2025	1350	2025	8290	12400	12400
	Thermal	875	777	1170	3580	7160	7160
8 in	Weight	333	534	333	1210	758	758
	Seismic	2360	1580	2360	10700	16000	16000
	Thermal	1050	938	1410	4800	9590	9590
10 in	Weight	361	578	361	2210	1380	1380
	Seismic	2540	1690	2540	19400	29100	29100
	Thermal	1110	991	1490	8500	17000	17000
12 in	Weight	502	803	502	3240	2020	2020
	Seismic	3510	2340	3510	28100	42100	42100
	Thermal	1550	1380	2070	12400	24800	24800
14 in	Weight	591	946	591	3870	2420	2420
	Seismic	4160	2780	4160	33900	50900	50900
	Thermal	1850	1640	2460	15000	30100	30100
16 in	Weight	757	1210	757	5080	3180	3180
	Seismic	5310	3540	5310	44100	66100	66100
	Thermal	2380	2120	3180	19800	39500	39500
18 in	Weight	1200	1930	1200	8190	5120	5120
	Seismic	8490	5660	8490	71500	107000	107000
	Thermal	2990	2660	3980	25200	50300	50300
20 in	Weight	1280	2050	1280	8630	5400	5400
	Seismic	8910	5940	8910	75900	114000	114000
	Thermal	3660	3260	4880	31200	62400	62400
22 in	Weight	1380	2200	1380	9380	5860	5860
	Seismic	9510	6340	9510	81500	122000	122000
	Thermal	4420	3930	5900	37900	75800	75800
24 in	Weight	1600	2570	1600	11000	6870	6870
	Seismic	11100	7430	11100	96100	144000	144000
	Thermal	5240	4660	6990	45200	90400	90400

Table A3- Minimum Nozzle Loads Due to Carbon Steel Piping on Vessels Designated as SC-I

Pipe Size	Load Type	Forces			Moments		
		Fx (lb)	Fy (lb)	Fz (lb)	Mx (ft-lb)	My (ft-lb)	Mz (ft-lb)
1 in	Weight	10	16	10	11	7	7
	Seismic	30	20	30	45	67	67
	Thermal	36	32	46	53	106	106
1-1/2 in	Weight	20	32	20	28	18	18
	Seismic	60	40	60	111	166	166
	Thermal	72	64	96	132	265	265
2 in	Weight	34	54	34	50	31	31
	Seismic	100	68	100	192	288	288
	Thermal	122	108	162	232	465	465
3 in	Weight	68	108	68	192	120	120
	Seismic	207	138	207	755	1130	1130
	Thermal	251	222	335	915	1830	1830
4 in	Weight	113	180	113	357	223	223
	Seismic	344	230	344	1420	2130	2130
	Thermal	420	374	561	1740	3480	3480
6 in	Weight	260	416	260	1000	626	626
	Seismic	792	528	792	3950	5930	5930
	Thermal	989	879	1320	4930	9870	9870
8 in	Weight	302	482	302	1290	806	806
	Seismic	932	621	932	5250	7870	7870
	Thermal	1170	1040	1560	6610	13200	13200
10 in	Weight	411	658	411	2390	1500	1500
	Seismic	1270	848	1270	9130	13700	13700
	Thermal	1630	1450	2180	11700	23400	23400
12 in	Weight	608	973	608	3760	2350	2350
	Seismic	1880	1250	1880	14200	21300	21300
	Thermal	2430	2160	3240	18400	36800	36800
14 in	Weight	744	1190	744	4710	2940	2940
	Seismic	2350	1560	2350	18500	27800	27800
	Thermal	3030	2700	4040	23900	47900	47900
16 in	Weight	1030	1650	1030	7040	4400	4400
	Seismic	3250	2170	3250	27700	41500	41500
	Thermal	4200	3730	5600	35800	71500	71500
18 in	Weight	1410	2250	1410	9840	6150	6150
	Seismic	4240	2830	4240	38700	58000	58000
	Thermal	5580	4960	7440	50900	102000	102000
20 in	Weight	1730	2770	1730	12700	7970	7970
	Seismic	5340	3560	5340	49600	74400	74400
	Thermal	7160	6360	9540	66500	133000	133000
22 in	Weight	2080	3340	2080	13100	8200	8200
	Seismic	6290	4190	6290	50300	75500	75500
	Thermal	8590	7640	11500	68800	138000	138000
24 in	Weight	2650	4240	2650	20700	12900	12900
	Seismic	7980	5320	7980	79900	120000	120000
	Thermal	11100	9870	14800	111000	222000	222000

Table A4- Minimum Nozzle Loads Due to Carbon Steel Piping on Vessels Designated as SC-II, III or IV

Pipe Size	Load Type	Forces			Moments		
		Fx (lb)	Fy (lb)	Fz (lb)	Mx (ft-lb)	My (ft-lb)	Mz (ft-lb)
1 in	Weight	10	16	10	13	8	8
	Seismic	68	46	68	110	166	166
	Thermal	32	30	44	53	106	106
1-1/2 in	Weight	20	32	20	31	20	20
	Seismic	140	92	140	275	412	412
	Thermal	68	60	90	132	265	265
2 in	Weight	34	54	34	55	34	34
	Seismic	234	156	234	480	721	721
	Thermal	114	100	150	232	465	465
3 in	Weight	62	99	62	176	110	110
	Seismic	482	321	482	1910	2870	2870
	Thermal	231	206	308	915	1830	1830
4 in	Weight	104	167	104	335	209	209
	Seismic	804	536	804	3610	5420	5420
	Thermal	387	344	516	1740	3480	3480
6 in	Weight	243	389	243	949	593	593
	Seismic	1860	1250	1860	10200	15200	15200
	Thermal	906	806	1210	4930	9870	9870
8 in	Weight	353	564	353	1450	903	903
	Seismic	2690	1800	2690	13400	20200	20200
	Thermal	1320	1180	1770	6610	13200	13200
10 in	Weight	384	615	384	2600	1630	1630
	Seismic	2920	1950	2920	23700	35600	35600
	Thermal	1450	1290	1930	11700	23400	23400
12 in	Weight	567	908	567	4150	2590	2590
	Seismic	4310	2880	4310	37100	55600	55600
	Thermal	2140	1910	2860	18400	36800	36800
14 in	Weight	707	1130	707	5400	3380	3380
	Seismic	5380	3590	5380	48100	72200	72200
	Thermal	2670	2380	3570	23900	47900	47900
16 in	Weight	980	1570	980	8040	5020	5020
	Seismic	7450	4970	7450	71900	108000	108000
	Thermal	3700	3290	4940	35800	71500	71500
18 in	Weight	1300	2080	1300	11300	7090	7090
	Seismic	9890	6590	9890	102000	152000	152000
	Thermal	4950	4400	6600	50900	102000	102000
20 in	Weight	1640	2630	1640	14900	9330	9330
	Seismic	12500	8320	12500	132000	198000	198000
	Thermal	6300	5600	8400	66500	133000	133000
22 in	Weight	1900	3040	1900	15400	9620	9620
	Seismic	14400	9610	14400	135000	203000	203000
	Thermal	7330	6520	9770	68800	138000	138000
24 in	Weight	2510	4020	2510	24800	15500	15500
	Seismic	19000	12700	19000	217000	326000	326000
	Thermal	9760	8680	13000	111000	222000	222000

R10336899

RIVER PROTECTION PROJECT – WASTE TREATMENT PLANT

ENGINEERING SPECIFICATION

ISSUED BY
RPP-WTP PDC
MZ 7/13/04
INIT DATE

FOR

Seismic Qualification Criteria for Pressure Vessels

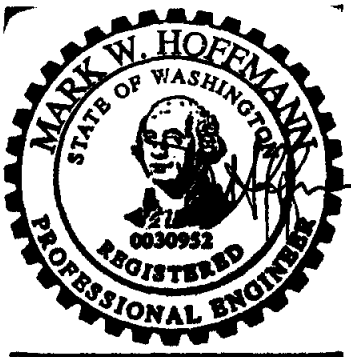

This bound document contains a total of 8 sheets.

Content applicable to ALARA? ☒ **Yes** ☐ **No**

ADR No.
N/A

Rev

Quality Designator
QL
DOE Contract No. DE-AC27-01RV14136

NOTE: Contents of this document are Dangerous Waste Permit affecting.

REV	DATE	REASON FOR REVISION	BY	CHECK	REVIEW	QA	APEM/DEM
2	7/12/04	Issued for Permitting Use	K Baughter	R Simmons		N/A	
1	03/27/03	Issued for Permitting Use	Jessica Jackson	Cliff Slater	Mark Hoffmann	n/a	n/a
0	09/17/02	Issued for Permitting Use	Jessica Jackson	Cliff Slater	Suzanne Kirk	n/a	n/a

SPECIFICATION No. 24590-WTP-3PS-MV00-TP002 **Rev** 2

Notice

Please note that source, special nuclear, and byproduct materials, as defined in the Atomic Energy Act of 1954 (AEA), are regulated at the US Department of Energy (DOE) facilities exclusively by DOE acting pursuant to its AEA authority. DOE asserts, that pursuant to the AEA, it has sole and exclusive responsibility and authority to regulate source, special nuclear, and byproduct materials at DOE-owned nuclear facilities. Information contained herein on radionuclides is provided for process description purposes only.

Contents

1 Scope 1
2 Applicable Documents 1
2.1 General 1
2.2 Codes and Industry Standards 1
2.3 Project Documents 1
3 Abbreviations and Definitions 2
4 Conflicts 2
5 Buyer's Responsibilities 2
6 Seller's Responsibilities 2
7 Design Requirements 3
7.1 Seismic Category 3
7.2 Design Code 3
7.3 Seismic Analysis 4
7.4 Maximum Allowable Stresses and Acceptance Criteria for the Vessel Proper 4
7.5 Maximum Allowable Stresses and Acceptance Criteria for Vessel Supports 5

1 Scope

1.1 This specification covers pressure vessel seismic analysis criteria and supplements the requirements of the specifications listed in Section 2.3.

1.2 This document shall be used by the vessel equipment designer.

1.3 Any communication between the Seller and the Buyer regarding the interpretation or interim findings of design must be in accordance with the instructions provided in the purchase order.

2 Applicable Documents

2.1 General

2.1.1 Work shall be in accordance with the referenced codes, standards, and documents listed below, which are an integral part of this specification.

2.1.2 When specific chapters, sections, parts, or paragraphs are listed following a code, industry standard, or reference document, only those chapters, sections, parts, or paragraphs of the document are applicable and shall be applied. If a date or revision is not listed, the latest issue, including addenda, at the time of request for quote shall apply. When more than one code, standard, or referenced document covers the same topic, the requirements for all must be met with the most stringent governing.

2.2 Codes and Industry Standards

2.2.1 American Society of Mechanical Engineers, Boiler and Pressure Vessel Code:

2.2.1.1 ASME Section VIII, Division 1, "*Rules for Construction of Pressure Vessels*"

2.2.1.2 ASME Section VIII, Division 2, "*Alternative Rules*"

2.2.1.3 ASME Section II, Part D, "*Properties*"

2.2.2 UBC, *1997 Uniform Building Code*

2.2.3 AISC Manual, American Institute of Steel Construction, "*Manual of Steel Construction*", Ninth Edition

2.2.4 DOE-STD-1020-94, Department of Energy, "*Natural Phenomena Hazards Design and Evaluation for the Department of Energy Facilities*", including change notice dated January 1996

2.3 Project Documents

2.3.1 24590-WTP-3PS-SS90-T0001, *Engineering Specification for Seismic Qualification of Seismic Category I/II Equipment and Tanks*

2.3.2 24590-WTP-3PS-FB01-T0001, *Engineering Specification for Structural Design Loads for Seismic Category III and IV Equipment and Tanks*

3 Abbreviations and Definitions

MDS	Mechanical Data Sheet
SC	Seismic Category
SC-I, II, III, IV or V	Specifies the required seismic category of an equipment item. Refer to 24590-WTP-3PS-SS90-T0001 and 24590-WTP-3PS-FB01-T0001 for a more detailed explanation.
Seismic Loading	Seismic loading is defined in terms of a site-specified design response spectrum, also referred to as Design Basis Earthquake (DBE), or specified for the site by Uniform Building Code, *UBC*.
SSC:	Structure, System and Component
NPH:	Natural Phenomena Hazard
Performance Category:	Per DOE-STD-1020-94, each SSC is assigned a NPH Performance Category ranging from PC-0 through PC-4.
RPP-WTP:	River Protection Project – Waste Treatment Plant

4 Conflicts

4.1 In cases of conflicts between this specification and other drawings or specifications, the Seller shall call attention to the conflict and request an interpretation by the Buyer.

4.2 All deviations from this specification, the purchase order, or the drawings require the written approval of the Buyer.

5 Buyer's Responsibilities

5.1 The Buyer assigns the Seismic Category to each vessel.

5.2 The Buyer provides the Seismic Response Spectra where necessary to perform the seismic analysis.

6 Seller's Responsibilities

6.1 The Seller is responsible for the seismic analysis of the vessels according to the assigned Seismic Category. The analysis shall include dynamic loading resulting from seismic excitation while the vessel is operating under normal operating conditions. The Seller shall ensure that stresses in the vessel do not exceed those allowed, as defined in Section 7.4 for the vessel proper and Section 7.5 for the vessel supports, for the required loads and combinations thereof.

6.2 Depending on the Seismic Category of the vessel and its internal components, a finite element analysis may be required to determine the vessel stresses when subjected to operating and seismic loading. The software and implementation used for the analysis shall be in accordance with the quality assurance requirements defined in the purchase order.

6.3 The Seller shall obtain approval from the Buyer before nominating others to perform the design services.

7 Design Requirements

7.1 Seismic Category

7.1.1 The RPP-WTP Structure, System and Components (SSC) are categorized as SC-I, II, III, IV or V. The SC level is based upon the contents and the required functionality of the SSC following a seismic event. The Seismic Category defines the applicable analysis method and the acceptance criteria.

7.1.2 NPH Performance Categories for each SSC are assigned using criteria specified in DOE-STD-1020-94, and range from PC-0 through PC-4 depending on overall risk of the facility operation and the assigned function to the SSC. The following table summarizes the descriptions of the NPH Performance Categories as defined in DOE-STD-1020-94 and the correlation to Seismic Category:

Performance Category	Performance Goal Description	RPP-WTP Seismic Category (SC)
PC-0	No safety, mission, or cost considerations	SC-V
PC-1	Maintain occupant safety	SC-IV
PC-2	Occupant safety, continued operation with minimum interruption.	SC-III
PC-3	Occupant safety, continued operation, hazard confinement.	SC-II or SC-I
PC-4	Occupant safety, continued operation, confidence of hazard confinement.	Not required for this project

7.2 Design Code

7.2.1 The governing design code for the vessel proper is ASME Section VIII, Division 1. The loadings to be considered in designing the vessel shall include those listed in paragraph UG-22 of the code.

7.2.2 The governing design code for the vessel supports is the AISC Manual per paragraph UG-54 and Appendix G of the ASME Section VIII, Division 1.

7.3 Seismic Analysis

7.3.1 Internal components, supports and piping systems shall be analyzed the same as the parent vessel unless otherwise noted.

7.3.2 The seismic loads for SC-I and SC-II vessels are contained in the 24590-WTP-3PS-SS90-T0001. Piping and other attachments that affect the response of the vessel shall be acknowledged in modeling and analysis. Their contribution to the performance of the vessel shall be assessed and documented in the calculations.

7.3.3 The seismic loads for SC-III and SC-IV vessels shall be determined according to the 24590-WTP-3PS-FB01-T0001. Factors for UBC equation 32-1 are given in Section 5.0 of that specification.

7.3.4 The seismic analysis of SC-I and SC-II vessels and their supports shall be by the dynamic analysis method identified in Section 6.1.1 of 24590-WTP-3PS-SS90-T0001. The equivalent static analysis method described in Section 6.1.2 of 24590-WTP-3PS-SS90-T0001 is not permitted.

7.3.5 The seismic analysis of SC-III and SC-IV vessels and their supports shall be performed in accordance with Section 5.0 of 24590-WTP-3PS-FB01-T0001.

7.4 Maximum Allowable Stresses and Acceptance Criteria for the Vessel Proper

7.4.1 **Maximum Allowable Tensile Stress** - The maximum allowable tensile stress, S, for the material of construction of the vessel shall be as specified in ASME Section II, Part D, and Subpart 1.

7.4.2 **Maximum Allowable Longitudinal Compressive Stress** - The maximum allowable longitudinal compressive stress used in the vessel design shall meet the requirements of paragraph UG-23(b) of the ASME Section VIII, Division 1.

7.4.3 **Maximum General Primary Membrane Stress** - The wall thickness of a vessel shall be determined such that the induced maximum general primary membrane stress does not exceed the maximum allowable stress in tension for any combination of loadings listed in paragraph UG-22 of ASME Section VIII, Division 1 that induce primary stresses and are expected to occur simultaneously during normal operation of the vessel.

7.4.4 **Combined Primary Membrane plus Primary Bending Stress** - The combination of loads as discussed in Section 7.4.3 shall not induce a combined maximum primary membrane stress plus primary bending stress across the vessel wall thickness, that exceeds 1.5 times the maximum allowable stress value in tension.

7.4.5 **Combination of Seismic Loadings with Other Loadings** - For the combination of seismic loading with other loadings in UG-22, the wall thickness of a vessel shall be determined such that the general primary membrane stress shall not exceed 1.2 times the permitted maximum allowable stress, as defined in 7.4.1, 7.4.2, 7.4.3 or 7.4.4. Seismic loading and wind loading need not be considered to act simultaneously.

7.4.6 The acceptance criteria for SC-I, SC-II, SC-III, and SC-IV vessels shall be in accordance with Appendix 4 of ASME Section VIII, Division 2, using the allowable stress, S, from ASME Section VIII, Division 1 in lieu of the design stress intensity, S_m, of ASME Section VIII, Division 2.

7.5 Maximum Allowable Stresses and Acceptance Criteria for Vessel Supports

7.5.1 Detailed design of vessel supports shall be in accordance with the recommendation of ASME Section VIII, Division 1, Appendix G. The stresses in vessel supports shall not exceed the maximum allowable stress values for the material of construction per Part 5 of the AISC Manual.

R10423701

ISSUED BY
RPP-WTP PDC

RIVER PROTECTION PROJECT – WASTE TREATMENT PLANT

ENGINEERING SPECIFICATION

FOR

Pressure Vessel Fatigue Analysis

11/11/04

EXPIRES 12/10/04

This bound document contains a total of 9 sheets.

Content applicable to ALARA? ☒ **Yes** ☐ **No**

ADR No.
N/A

Rev

Quality Designator
QL
DOE Contract No. DE-AC27-01RV14136

NOTE: Contents of this document are Dangerous Waste Permit affecting.

REV	DATE	REASON FOR REVISION	BY	CHECK	REVIEW	QA	APEM/DEM
2	11/11/04	Issued for Permitting Use	J. Jackson	C. Slater	N/A	N/A	M. Hoffmann
1	3/27/03	Issued for Permitting Use	J. Jackson	C. Slater	M. Hoffmann	n/a	n/a
0	09/1702	Issued for Permitting Use	J. Jackson	C. Slater	S. Kirk	n/a	n/a

SPECIFICATION No. 24590-WTP-3PS-MV00-TP003 **Rev** 2

Notice

Please note that source, special nuclear, and byproduct materials, as defined in the Atomic Energy Act of 1954 (AEA), are regulated at the US Department of Energy (DOE) facilities exclusively by DOE acting pursuant to its AEA authority. DOE asserts, that pursuant to the AEA, it has sole and exclusive responsibility and authority to regulate source, special nuclear, and byproduct materials at DOE-owned nuclear facilities. Information contained herein on radionuclides is provided for process description purposes only.

Contents

Notice ii
1 Introduction 1
2 Definitions and Acronyms 1
3 Applicable Documents 1
3.1 Codes and Industry Standards 1
3.2 Project Documents 2
4 Buyer's Responsibilities 2
5 Seller's Responsibilities 2
6 Fatigue Design Code 2
7 Cyclic Load Data 2
8 Fatigue Assessment 3
9 Fatigue Analysis 3
10 Surface Finishes 4
11 Nozzle Loads 4
12 Documentation 4

Figures

Figure 1: Example of Equipment Cyclic Data Sheet 6

1 Introduction

1.1 This specification is supplementary to 24590-WTP-3PS-MV00-TP001 and covers fatigue assessment and fatigue analysis requirements. The documents should be read in conjunction, particularly for definitions, conditions of conflict, and responsibilities of the parties. However, the clauses of the above document shall apply, unless specified otherwise here.

1.2 This document shall be used by the Seller.

1.3 Any communication between the Seller and the Buyer regarding the interpretation or interim findings of design must be in accordance with the instructions provided in the purchase order.

2 Definitions and Acronyms

MDS:	Mechanical Data Sheet.
Equipment Cyclic Data Sheet:	A table in the MDS which contains the cyclic data for that particular component
Charge Vessel:	A vertical cylindrical vessel in a pump system which is pressurized cyclically
Pulse Jet Mixer:	A vertical cylindrical vessel that is open at the lower end and is pressurized cyclically to act as a mixer
Parent Vessel:	A vessel that contains other vessels. This arrangement is typically a storage vessel with internal Charge Vessel and Pulse Jet Mixer equipment submerged within the normal liquid contents
Fatigue Assessment:	A documented exercise that determines whether fatigue is a significant design criterion and must be considered by subsequent fatigue analysis
Fatigue Analysis:	Calculations to determine fatigue life expectancy of the equipment
RPP-WTP:	River Protection Project – Waste Treatment Plant

3 Applicable Documents

3.1 Codes and Industry Standards

3.1.1 American Society of Mechanical Engineers, Boiler and Pressure Vessel Code:

3.1.1.1 ASME Section VIII, Division 1, *"Rules for Construction of Pressure Vessels"*

3.1.1.2 ASME Section VIII, Division 2, *"Alternative Rules"*

3.1.1.3 ASME SA 480/SA 480M, *"Standard Specification for General Requirements for Flat-Rolled Stainless and Heat Resisting Steel Plate, Sheet, and Strip"*

3.2 Project Documents

3.2.1 24590-WTP-3PS-MV00-TP001, *"Engineering Specification for Pressure Vessel Design and Fabrication"*

4 Buyer's Responsibilities

4.1 The Buyer shall provide the necessary cyclic data for the Seller to make an assessment regarding the fatigue life of the equipment.

5 Seller's Responsibilities

5.1 Assessment: The Seller shall perform an assessment of the equipment based on the cyclic data provided by the Buyer and also on any necessary data provided by others as contracted by the Seller.

5.2 Interpretation: The Seller shall confirm with the Buyer that the cyclic data has been accurately interpreted before proceeding to a fatigue analysis exercise.

5.3 Analysis: The Seller shall perform a fatigue analysis based upon the Buyer's data.

5.4 Documentation: The Seller shall provide statements and calculations for the fatigue assessment and any analysis to the Buyer for review and approval, to support the satisfactory design life of the equipment.

5.5 Design Changes: The Seller shall make the resulting design changes to ensure the required life expectancy of equipment and subsequently obtain the Buyer's approval. The design changes shall be restricted to material thickness increases, weld types and weld seam locations. Buyer's opinion of changes shall be obtained at an early stage of the design development to ensure compliance with criteria outside the Seller's scope.

6 Fatigue Design Code

6.1 The overall design code for pressure vessels is the ASME Section VIII, Division 1. Paragraph UG-22 (e) of Division 1, requires consideration of cyclic loading. This shall be in accordance with ASME Section VIII, Division 2, and Appendices 4 and 5 as required by Paragraph AD-160 of Division 2.

7 Cyclic Load Data

7.1 The Buyer provides cyclic data for pressure vessels in the form of Equipment Cyclic Data Sheets (ECDS), refer to Figure 1. The ECDS is part of the equipment MDS. This contains the information on pressure, temperature and mechanical load cycles along with notes regarding the

coincidence in time of the various loads. It may be necessary for the Seller to obtain information originating from sources such as agitator suppliers. Where the Seller must obtain additional cyclic data information, the Buyer will identify this in the MDS.

7.2 Shipping and transportation is a potential source of fatigue damage. Dip pipes and other susceptible components shall be considered in relation to typical transport excitation frequencies.

7.3 Equipment must be designed to avoid excessive vibration during service. For example, shell and tube heat exchangers are designed to avoid potentially damaging tube vibration.

7.4 The RPP-WTP plant contains several batch processes that utilize equipment designed to ASME Section VIII, Division 1, and subsequently, this specification. The vessel equipment shall be designed for a period of 40 years operation unless otherwise stated on the MDS or ECDS.

8 Fatigue Assessment

8.1 The Seller shall make an assessment of the cyclic loading on the proposed design for approval by the Buyer.

8.2 The assessment is a procedure to identify equipment that may not require a full fatigue analysis. The details of this calculation, the assumptions made, and the effects from mechanical loads, shall be submitted for Buyer approval.

8.3 The rules of ASME Section VIII, Division 2, AD160, apply for the assessment.

8.4 The equipment must not have the features described in AD-160.1 unless specific agreement is obtained from the Buyer. The requirements of AD-100 (b) that are necessary for the assessment and analysis to be applicable shall be observed.

8.5 The liquid static head pressure affecting the stress at any location of interest shall be considered, in addition to other loads.

9 Fatigue Analysis

9.1 If the Buyer approves the conclusion that Paragraph AD-160 requires a fatigue analysis to ASME Section VIII, Division 2, Appendices 4 and 5, then the fatigue analysis for all cyclical loads identified in the ECDS shall demonstrate that the maximum cumulative usage factor, 'U', does not exceed 1.0 at any critical location or discontinuity on the vessel wall such as near nozzles, supports, and structural attachments.

9.2 The thickness of corrosion allowance shall be completely removed from components when determining stress levels.

10 Surface Finishes

10.1.1 The equipment surface finish assumed for a fatigue analysis shall not exceed 2B plate mill finish in accordance with ASME SA 480/SA 480M.

10.1.2 Surface finish enhancements for cleaning or inspection purposes are not to be assumed to enhance fatigue life.

10.1.3 Local contour dressing of welds for fatigue life improvement shall not be acknowledged in any fatigue analysis. However, where the fabrication code tolerates any undercut at a weld toe this shall be acknowledged in fatigue analysis as an additional stress concentration unless fabrication and inspection procedures confirm that undercut is not present or has been repaired.

10.1.4 Welds should be assumed to be descaled as-laid for fatigue analysis purposes. The finish of welds must be full throat thickness with a blended form at the parent metal.

11 Nozzle Loads

11.1.1 The minimum nozzle design loads in applicable table of 24590-WTP-3PS-MV00-TP001, Appendix A shall be used for analysis. The seismic component of loads may be ignored as the seismic design is based on a single design basis event making negligible contribution to the fatigue life. The thermal and weight component of loads shall be considered in the analysis.

11.1.2 The maximum peak stress intensity range values from the combination of all piping loads, pressure, and temperature at a nozzle shall be used for fatigue analysis. If maximum values from different locations are combined then this must be identified in the calculations.

11.1.3 If the vessel has internal piping, such as for charge vessels and pulse jet mixers, the loads listed in the applicable table of 24590-WTP-3PS-MV00-TP001, Appendix A shall be combined with the loads calculated by the Seller for the reaction of the internal piping on the attached nozzle.

12 Documentation

12.1 The ASME, Section VIII, Division 1, UG-22 requirement, for the consideration of cyclic loads, must be addressed by a fatigue assessment and where required, a fatigue analysis. This must be documented and submitted for the Buyer's approval prior to commencement of fabrication.

12.2 Typical assessment documents shall contain:

- An appraisal of the equipment duty data and the locations that are sensitive to fatigue
- Histograms of the load cycles assumed for the assessment
- The calculation of the assessment criteria values
- The conclusions, assumptions and limitations of the assessment
- Supporting references

12.3 Typical analysis documents shall contain the above assessment and:

- The stress derivations, classifications and combinations considered as cyclic
- The cumulative usage factor at each critical location analyzed for fatigue
- The conclusions, assumptions and limitations of the analysis
- Supporting references

Figure 1: Example of Equipment Cyclic Data Sheet

Equipment Cyclic Data Sheet

Plant Item Number:	
Component Description	

The information below is provisional and envelopes operational duty for fatigue assessment. It is not to be used as operational data.

Materials of Construction	
Design Life	
Component Function and Life Cycle Description	

Load Type		Min	Max	Number of Cycles	Comment
Design Pressure	psig				
Operating Pressure	psig				
Operating Temperature	°F				
Contents Specific Gravity					
Contents Level	inch				
Localized Features					

Notes

Cycle increase: The Seller must increase the numbers of operational cycles given above by 10% to account for commissioning duty unless otherwise noted.

ISSUED BY
RPP-WTP PDC

R10384505

RIVER PROTECTION PROJECT – WASTE TREATMENT PLANT

ENGINEERING SPECIFICATION

FOR

Activated Carbon Bed Adsorbers

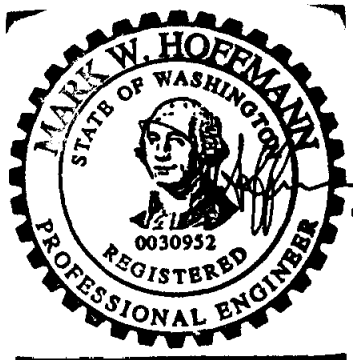

9/26/04

EXPIRES 12/10/04

This bound document contains a total of 53 pages

Content applicable to ALARA? ☒ Yes ☐ No

ADR No.
N/A

Rev

Quality Designator
QL
DOE Contract No. DE-AC27-01RV14136

NOTE: Contents of this document are Dangerous Waste Permit affecting.

REV	DATE	REASON FOR REVISION	BY	CHECK	REVIEW	QA	APPROVEM
0	9/26/04	Issued for permitting use.				N/A	

SPECIFICATION No. 24590-WTP-3PS-MWK0-TP001 **Rev** 0

Notice

Please note that source, special nuclear, and byproduct materials, as defined in the Atomic Energy Act of 1954 (AEA), are regulated at the US Department of Energy (DOE) facilities exclusively by DOE acting pursuant to its AEA authority. DOE asserts, that pursuant to the AEA, it has sole and exclusive responsibility and authority to regulate source, special nuclear, and byproduct materials at DOE-owned nuclear facilities. Information contained herein on radionuclides is provided for process description purposes only.

Contents

Notice ii

1 Scope 1

1.1 Project Description and Location 1
1.2 Equipment, Material, and Services Required 1
1.3 Work by Others 4
1.4 Acronyms 4
1.5 Definitions 6
1.6 Safety/Quality Classifications 7

2 Applicable Documents 8

2.1 General 8
2.2 Codes 8
2.3 Industry Standards 8
2.4 Reference Documents/Drawings 9

3 Design Requirements 10

3.1 General Requirements 10
3.2 Basic Function 12
3.3 Optional Electric Preheater 13
3.4 Performance 14
3.5 Design Conditions 14
3.6 Environmental Conditions 14
3.7 Mechanical Requirements 15
3.8 Discharge Filter Requirements 16
3.9 Lifting Requirements 16
3.10 Loadings 17
3.11 Bag-in/Bag-out Procedure Requirements 17
3.12 CFD Model and Analysis Requirements 18
3.13 Thermal Requirements 20
3.14 Activated Carbon Bed Adsorber Design Analysis Requirements 20
3.15 Electrical Requirements 21
3.16 Instrumentation and Control Requirements 22
3.17 Accessibility and Maintenance 23

4 Materials 25

4.1 General 25
4.2 Construction 25

4.3 Insulation 26
4.4 Piping 27
4.5 Prohibited Materials 27
4.6 Storage of Special Materials (e.g., stainless steel) prior to work 27
5 Fabrication 28
5.1 General Requirements 28
5.2 Assembly 28
5.3 Tolerances 29
5.4 Welding 29
6 Tests and Inspections 30
6.1 General Requirements 30
6.2 Weld Testing and Inspection 31
6.3 Personnel Qualifications 32
6.4 Laboratory Tests 32
6.5 Shop Tests 33
6.6 Site Tests 34
6.7 Bag-in/Bag-out Procedure Demonstration 34
7 Preparation for Shipment 34
7.1 General Requirements 34
7.2 Cleanliness 35
7.3 Tagging 35
7.4 Documentation 36
7.5 Shipment Preparation Instructions 36
8 Quality Assurance 36
8.1 General Requirements 36
8.2 Quality (Q) Related Components 37
8.3 Supplier Deviation 37
9 Configuration Management 38
10 Documentation and Submittals 38
10.1 General 38
10.2 Drawings 39
10.3 30% Design Review 40
10.4 90 % Design Review 41
10.5 Calculations 41
10.6 Schedules 41

Figures

Figure 1 - Activated Carbon Bed Adsorber Schematic.....42

Appendices

Appendix A – Mandatory Test Requirements for HLW/LAW Carbon Bed Adsorbers ... A-1

1 Scope

1.1 Project Description and Location

The Hanford Tank Waste Treatment and Immobilization Plant (WTP) is a complex of waste treatment facilities where the US Department of Energy (DOE) Hanford Site tank waste will be pretreated and immobilized into stable glass form via vitrification. The WTP Contractor will design, build, and startup the WTP pretreatment and vitrification facilities for the DOE Office of River Protection (ORP). The waste treatment facilities will pretreat and immobilize the low activity waste (LAW) and high level waste (HLW) currently stored in underground storage tanks at the Hanford Site.

The Hanford Site occupies an area of about 560 square miles and is located along the Columbia River, north of Richland, WA in the U.S.A. The WTP Facility will be constructed at the east end of the 200 East Area of the Hanford Site. The counties of Benton, Franklin, and Grant surround the Hanford Site.

1.2 Equipment, Material, and Services Required

This specification provides the requirements for the design, analysis, fabrication, project management, quality assurance, inspection, testing, qualification, and labeling of the Activated Carbon Bed Adsorbers, associated filters, gaskets, insulation, piping, fasteners, shims, and special tools for use in the High Level Waste (HLW) and Low Activity Waste (LAW) facilities. This specification also provides the requirements for the conception, demonstration, design, fabrication, quality assurance, inspection, testing, qualification, and supply of activated carbon, testing equipment, testing apparatus, testing materials, manuals, instructions, and procedures.

The scope of work for the Seller includes all work specifically defined in this specification. Work shall include, but is not limited to, the following:

1.2.1 Provide fully detailed designs, drawings, supporting calculations, supporting analysis, supporting models, procedures, and all labor, materials, fasteners, tooling, equipment, apparatus, instrumentation, shop drawings, and services necessary to manufacture, test, inspect, insulate, label, and package Activated Carbon Bed Adsorbers in accordance with this specification and the Mechanical Data Sheets in Section 2 of the Material Requisition (MR).

1.2.2 Provide Buyer with a breakdown (by paragraph) of the following codes, industry standards, and referenced documents to be applied to each aspect of the Activated Carbon Bed Adsorbers detailed design, drawings, analysis, fabrication, quality assurance, inspection, testing, qualification, labeling, packaging, handling, and shipment for review prior to beginning detailed design:

- ASME AG-1-1997
- ASME AG-1a-2000
- ASME N509-1989

- ASME B&PVC, Section VIII, Div 1

If an entire section or part of the above listed codes and standards applies, a breakdown by paragraph is not required. Only the part or section shall be listed.

1.2.3 Provide design calculation in accordance with this specification and applicable codes. Calculations shall include, but not be limited to:

- Code calculations
- Seismic calculations
- Support calculations (Include resultant reactions at support locations)
- Calculations associated with lifting and erection of the vessel
- Nozzle loads and movements per thermal and seismic calculations
- Thermal and discontinuity stresses as applicable
- Fatigue analysis as applicable for pressure vessels in fatigue services

1.2.4 Provide a three-dimensional (3-D) computational fluid dynamics (CFD) model and analysis of the Activated Carbon Bed Adsorbers. CFD model and analysis shall include necessary Buyer supplied inlet piping to model the velocity profile of the offgas air stream entering the adsorber.

1.2.5 Provide thermal calculations for the Activated Carbon Bed Adsorber units and support frames in accordance with the requirements of this specification and Mechanical Data Sheets (MDSs) in section 2 of the Material Requisition (MR). Select insulation material (i.e. calcium silicate, mineral wool, etc.) to meet thermal requirements of this specification.

1.2.6 Provide an analysis of the Activated Carbon Bed Adsorber design to determine expected adsorber changeout frequency.

1.2.7 Provide pneumatic loading system with the necessary equipment needed to safely load the activated carbon adsorbent media into the bed, per the requirements of section 3.7.2 of this specification.

1.2.8 Provide connecting piping and actuated on/off control valves to configure two (2) Activated Carbon Bed Adsorber units in a single offgas stream to be operated in either series or parallel with the ability to isolate one unit for maintenance and still operate. Activated Carbon Bed Adsorber units shall be configured for automatic (remote) operation from Buyer's integrated control network.

1.2.9 Provide internal water deluge fire suppression system to allow flooding of the Activated Carbon Beds. Fire detection shall be designed in accordance with NFPA 72 requirements using a combination of differential carbon monoxide (CO) monitors and temperature monitors.

1.2.10 Provide fire detection and suppression system acceptance tests.

1.2.11 Provide control logic and I/O mapping for automatic configuration and fire suppression system.

1.2.12 In addition to the field testing requirements set forth in ASME AG-1, Section TA, and/or ASME N509, Section 9, conduct the following acceptance tests in the shop, on each Activated Carbon Bed Adsorber unit prior to shipment:

- Visual Inspection
- Structural Capability Test
- System Bypass Test
- Mechanical Test
- Differential Pressure Test
- Airflow Distribution Test
- Electrical Air Heater Performance Test (per design)
- Fire suppression hydrostatic vessel pressure tests

1.2.13 Provide challenge gas and challenge gas injection and sampling ports/manifolds.

1.2.14 Provide detailed bag-in/bag-out procedure for removal and replacement of adsorbent and any other filter(s) required.

1.2.15 Provide all personnel, equipment, apparatus, labor, personal protection equipment (PPE), materials, glovebags, bags, HEPA filters, etc. to simulate field conditions, demonstrate, and videotape the bag-in/bag-out procedure using fully assembled Activated Carbon Bed Adsorber equipment in shop.

1.2.16 Provide material certified test reports, welding procedures, insulation installation procedures, testing procedures, testing results, quality assurance procedures, quality assurance inspection results, and all other procedures and documentation required per this specification.

1.2.17 Provide transportation, storage, and installation instructions for the Activated Carbon Bed Adsorber units per the Seller's recommendations and the requirements of this specification.

1.2.18 Package and prepare the Activated Carbon Bed Adsorber units for shipment to the WTP site. Packaging shall be sufficient to allow outdoor storage for a period of up to one year at the WTP site, without Buyer action except routine inspection. Environmental conditions for storage are found in section 3.6 of this specification.

1.2.19 Provide all equipment, instrumentation, labor, and materials to perform a shop lifting test, demonstrating that the lifting lugs or attachment points are adequate to support the Activated Carbon Bed Adsorber units without distortion. Lifting lugs or attachment points shall be placed such that the equipment remains essentially level during the lift without tilting or swaying. Seller shall provide shop test report on lifting points provided on the Activated Carbon Bed Adsorber equipment.

1.2.20 Provide Material Safety Data Sheets (MSDSs) for loaded Activated Carbon Bed Adsorber and all other materials used in the construction of the Activated Carbon Bed Adsorber units.

1.2.21 Provide operation and maintenance manuals, with sequence of operations, and recommended spare parts list.

1.2.22 Provide a set of special tools for each Activated Carbon Bed Adsorber required for operation, bag-in/bag-out, sampling, and maintenance.

1.2.23 Provide design for structural attachment to the Buyer's provided embeds.

1.3 Work by Others

Any item not specifically listed as being supplied by the Buyer shall be provided by the Seller. The Buyer shall supply the following:

1.3.1 Shipping to jobsite.

1.3.2 Unloading and storage of all materials and equipment at jobsite.

1.3.3 Activated Carbon Bed Adsorber installation labor at jobsite.

1.3.4 Foundation, embeds, and anchor bolts.

1.3.5 Electric power supply

1.3.6 External wiring

1.3.7 External connection to Buyer's instrumentation and controls

1.3.8 Control system

1.3.9 Piping external to the Activated Carbon Bed Adsorber unit package

1.3.10 Pressure drop indicators for pressure drop piping connections.

1.3.11 Installation of insulation

1.4 Acronyms

AGS	American Glovebox Society
AISC	American Institute of Steel Construction
ASME	American Society of Mechanical Engineers
ASTM	American Society of Testing Materials
AWS	American Welding Society
CFD	Computational Fluid Dynamics
CFR	Code of Federal Regulations

3-D	Three-Dimensional
DF	Decontamination Factor
DOE	US Department of Energy
ESF	Engineered Safety Feature
ERDA	Energy Research and Development Administration
FMEA	Failure Mode and Effect Analysis
HEPA	High Efficiency Particulate Air
HCl	Hydro-Chloric
HLW	High Level Waste
HF	Hydro-Fluoric
HVAC	Heating, Ventilation, and Air-Conditioning
HOP	High Level Waste Secondary Offgas Treatment System
FFB	Foundation Field Bus
ICN	Integrated Control Network
LAW	Low Activity Waste
LVP	Low Activity Waste Secondary Offgas System
MR	Material Requisition
MDS	Mechanical Data Sheet
MSDS	Material Safety Data Sheet
NDE	Nondestructive Evaluation/Examination
NFPA	National Fire Protection Association
NRTL	Nationally Recognized Testing Laboratory
ORP	Office of River Protection
OSHA	Occupational Safety and Health Administration
P&ID	Piping and Instrumentation Diagram
PMI	Positive Material Identification
PPE	Personnel Protection Equipment
ppm	Parts per million
psf	pounds per square foot (lb/ft^2)
PSV	Pressure Safety Valve
QA	Quality Assurance
QAP	Quality Assurance Program
QL	Quality Level
SC	Seismic Category

scfm	Standard Cubic Feet per Minute
SDDR	Supplier Deviation Disposition Request
SS	Stainless Steel
TBD	To Be Determined
UL	Underwriters Laboratories, Inc.
WAC	Washington Administrative Code
WTP	Hanford Tank Waste Treatment and Immobilization Plant

1.5 Definitions

Activated Carbon Bed Adsorber Unit: Refers to complete Carbon Bed equipment assembly. This includes two (2) full capacity Carbon Bed Adsorber, connecting pipe work, valves, instrumentation, and support frame for Carbon Bed Adsorbers and piping.

Activated Carbon Bed Adsorber expert: One who has extensive knowledge regarding the characteristics and application of Activated Carbon Bed Adsorbers. Must have a minimum of five (5) years experience.

Adsorbent Media: A solid having the ability to concentrate and hold other substances.

Adsorber: A device or vessel containing adsorbent (e.g., an adsorber cell filled with adsorbent).

Bag-in/Bag-out: A method of introducing and removing items from a contaminated enclosure where a bag provides a physical barrier at all times during the operation that prevents the spread of contamination.

Buyer's Representative(s): The Buyer's designee(s), who shall witness onsite operations at the seller and sub-seller sites and perform onsite inspections and surveillance.

Bypass, Leakage: A pathway through which contaminated air can escape treatment by the installed HEPA and/or adsorber banks. Examples are leaks in filters and filter mounting frames, defective or inefficient isolation dampers that result in the uncontrolled flow through adjacent plenums, and unsealed penetrations for electrical conduits, pipes, floor drains, etc.

Challenge Gas: A gas of known characteristics, under specified conditions, used for the purpose of testing. For in-shop and in-place/field testing of adsorbers required by this specification. The challenge gas to be used shall depend on what is recommended by the Activated Carbon Bed Adsorber manufacturer. Challenge gas shall be an environmentally safe non-ozone depleting substance, if possible.

Engineered Safety Feature (ESF): A nuclear air treatment system, HVAC system, gas processing system, or a component that serves to control and limit the consequences of releases of energy and radioactivity.

Glovebag: A temporary barrier to contain or prevent the spread of contamination generally during system maintenance or production. The area or component is surrounded by the portable glovebox boundary material, usually a flexible plastic film. Personnel perform work inside the glovebag through glovesleeves and gloves while remaining outside the containment area. Other access ports are provided to allow for equipment and service penetrations as necessary. Additional openings can be provided through the use of zippers, velcro closures, and bag-out ports.

HEPA Filter: A high efficiency particulate air filter having a fibrous medium with a particle removal efficiency of at least 99.97 % when tested with essentially monodispersed 0.3 μm test aerosol particles.

Mounting Frame: A structure against which adsorbers may be snugly mounted and supported in a position that permits the passage of air or gas and provides a surface to hold the sealing gasket, thereby avoiding a potential bypass or leakage path for the non-filtered air or gas.

Paragraph: When a paragraph of this specification, referenced documents, referenced codes, or referenced standards is referenced in this specification, the paragraph referenced and all subparagraphs and sub-subparagraphs of the paragraph referenced shall be considered inclusive.

Quality Level (QL): The quality level identifies the quality requirements to be applied to the equipment. The identified quality levels are QL-1, QL-2, QL-3, QL-4, AP (Air Permit), and CM (Commercial). Quality requirements are specifically defined on the associated mechanical data sheets (MDSs) and supplier quality assurance program (QAP) requirements data sheets.

Seismic Category (SC): Specific requirements for each seismic category are defined in reference documents listed in section 2.5 of this specification.

Special Tools: Any tooling required to perform maintenance on the Activated Carbon Bed Adsorber unit or for Activated Carbon Bed Adsorber and discharge filter removal and replacement. Includes tools that must be specially designed and fabricated and tools that are readily available in the commercial market.

1.6 Safety/Quality Classifications

1.6.1 Activated Carbon Bed Adsorber units for HLW shall meet the quality level requirements of QL-2 as defined on the associated MDSs and supplier quality assurance program requirements data sheet. Seismic category shall be SC-III as defined on the associated MDSs and defined in reference documents listed in section 2.4 of this specification.

1.6.2 Activated Carbon Bed Adsorber units for LAW shall meet the quality level requirements of QL-1 as defined on the associated MDSs and supplier quality assurance program requirements data sheet. Seismic category shall be SC-III as defined on the associated MDSs and defined in reference documents listed in section 2.4 of this specification.

2 Applicable Documents

2.1 General

2.1.1 Work shall be done in accordance with the referenced codes, standards, and documents listed below, which are an integral part of this specification.

2.1.2 When specific chapters, sections, parts, or paragraphs are listed following a code, industry standard, or reference document, only those chapters, sections, parts, or paragraphs of the document are applicable and shall be applied. If a date or revision is not listed in section 2, the latest issue, including addenda, at the time of award shall apply. The dates and revisions listed in section 2 shall apply to all subsequent references to codes and standards within this specification. When more than one code, standard, or referenced document covers the same topic, the requirements for all must be met with the most stringent governing.

2.2 Codes

2.2.1 ASME AG-1-1997, Code on Nuclear Air and Gas Treatment, Sections AA, FE, FF, and TA.

2.2.2 ASME AG-1a-2000, Addenda to ASME AG-1-1997 Code on Nuclear Air and Gas Treatment, Section HA

2.2.3 ASME B31.3-1996, Process Piping

2.2.4 ASME Boiler and Pressure Vessel Code, Section VIII, Div. 1, Rules for Construction of Pressure Vessels

2.2.5 DOE-RL-92-36, Hanford Site Hoisting and Rigging Manual

2.2.6 AWS D1.6, Structural Welding Code-Stainless Steel

2.2.7 WAC 296-24, General Safety and Health Standards

2.2.8 AISC (ASD), 9th Edition, American Institute of Steel Construction

2.3 Industry Standards

2.3.1 AGS-G001 ©1998, Guideline for Gloveboxes, Second Edition

2.3.2 ASME N509-1989, Nuclear Power Plant Air-Cleaning Units and Components, Sections 1, 2, 3, 4 – (Paragraphs 4.3, 4.4, 4.6.1 through 4.6.7.2, 4.11, 4.12. 4.13(a)), 5 – (Paragraphs 5.5, 5.6.5.5 and 5.6.5.6), 7 – (Paragraph 7.2), 8 – (Paragraph 8.2), 9, Appendix C, and Appendix D.

2.3.3 ASME N510-1989, (Rev.1995), Testing of Nuclear Air Treatment Systems, Sections 1 through 8, 11, 13, 14, 15, and appendices

2.3.4 ASME NQA-1-1989, Quality Assurance Program Requirements for Nuclear Facilities

2.3.5 ASME Y14.100, Engineering Drawing Practices

2.3.6 ASTM E84, Standard Test Method for Surface Burning Characteristics of Building Materials

2.3.7 ASTM F593, Standard Specification for Stainless Steel Bolts, Hex Cap Screws, and Studs

2.3.8 ASTM F594, Standard Specification for Stainless Steel Nuts

2.3.9 ERDA 76-21, Nuclear Air Cleaning Handbook, Chapter 1 (All), Chapter 2 (Paragraphs 2.1 through 2.4.16), Chapter 3 (Paragraphs 3.1, 3.4.1, 3.4.2, 3.4.5, 3.4.6), Chapter 4 (Paragraphs 4.3 through 4.3.5, 4.5.9), Chapter 7 (All), Chapter 8 (All), Chapter 9 (Paragraph 9.4.1)

2.3.10 NACE Standard RP0198, The Control of Corrosion Under Thermal Insulation and Fireproofing Materials-A Systems Approach

2.3.11 NFPA 72, National Fire Alarm Code, 2002 Edition

2.3.12 PIP INIH1000, Hot Insulation Installation Details

2.3.13 RR-C-271D, Federal Specification

2.4 Reference Documents/Drawings

2.4.1 24590-WTP-3PS-G000-T0001, General Specification for Supplier Quality Assurance Program Requirements

2.4.2 24590-WTP-3PS-G000-TP002, Specification for Positive Material Identification (PMI)

2.4.3 24590-WTP-3PS-G000-T0003, Engineering Specification for Packaging, Handling, and Storage Requirements

2.4.4 24590-WTP-3PS-NWP0-T0001, Engineering Specification for General Welding and NDE Requirements for Supplier Fabricated Piping

2.4.5 24590-WTP-3PS-MVB2-T0001, Specification for Welding of Pressure Vessels, Heat Exchangers and Boilers

2.4.6 24590-WTP-3PS-JQ07-T0001, Engineering Specification for Instrumentation for Package Systems

2.4.7 24590-WTP-3PS-SS00-T0001, Engineering Specification for Welding of Carbon Structural Steel

2.4.8 24590-WTP-3PS-SS00-T0002, Engineering Specification for Welding of Structural Stainless Steel and Welding of Structural Carbon Steel to Structural Stainless Steel

2.4.9 24590-WTP-3PS-FB01-T0001, Engineering Specification for Structural Design Loads for Seismic Category III and IV Equipment and Tanks

2.4.10 24590-WTP-3PS-NN00-T0001, Engineering Specification for Hot and Anti-Sweat Thermal Insulation

2.4.11 24590-WTP-3PS-JA03-T0001, Engineering Specification for Gas Analyzers

2.4.12 24590-WTP-3PB-P000-TS11V, Piping Material Classification Pipe, Class S11V

2.4.13 24590-WTP-3PB-P000-TS11N, Piping Material Classification Pipe, Class S11N

2.4.14 24590-WTP-3PS-PV00-T0001, Engineering Specification for Technical Supply Conditions for Valves

2.4.15 24590-WTP-3PS-JV15-T0001, Engineering Specification for Actuators for On/Off Valves

2.4.16 24590-WTP-3PS-EKP0-T0001, Engineering Specification for Electrical Requirements for Packaged Equipment

2.4.17 24590-WTP-3PS-MUMI-T0002, Engineering Specification for Low Voltage Induction Motors

2.4.18 24590-WTP-3PS-PS02-T0001, Engineering Specification for Shop Fabrication of Piping

2.4.19 24590-WTP-3PS-MV00-TP001, Engineering Specification for Pressure Vessel Design and Fabrication

3 Design Requirements

3.1 General Requirements

3.1.1 The Activated Carbon Bed Adsorbers and support frame shall be designed per this specification, the applicable documents listed in section 2 of this specification, and the MDSs in section 2 of the MR.

3.1.2 The detailed design of the Activated Carbon Bed Adsorbers shall be performed by personnel who have past experience in the design, fabrication, and testing of Activated Carbon Bed Adsorber banks or HEPA filter banks to meet the requirements set forth in ASME AG-1, ASME AG-1a, and NQA-1. Qualifications for personnel conducting the detailed design of the Activated Carbon Bed Adsorber shall be provided to the Buyer for review.

3.1.3 All calculations, modeling, analyses, drawings, and documentation shall be performed and/or completed using U.S. customary units.

3.1.4 The design of the Activated Carbon Bed Adsorber pressure boundary shall be per the requirements of ASME Boiler and Pressure Vessel Code, Section VIII, Div.1. **(Code stamp is not required)** Design pressure used shall be as specified on the MDSs. Design temperature shall be determined by Seller based on thermal analysis specified in section 3.13.5 for conditions generated during a carbon bed fire.

3.1.5 The design of the Activated Carbon Bed Adsorbers shall be per Seller and shall meet the performance requirements of this specification, appendices, and MDSs in section 2 of the MR.

3.1.6 Each Activated Carbon Bed Adsorber shall be equipped with a fire suppression system. Fire detection shall be in accordance with NFPA 72 requirements using a combination of differential CO monitors and carbon bed temperature monitors for fire detection. Refer to Figure 1 for additional information related to CO monitors and temperature monitors. Each fire detection system shall be on an independent circuit, allowing the isolation of one carbon bed upon detection of a fire, such that one Activated Carbon Bed Adsorber will not affect the fire detection capability in the other unit.

3.1.7 Seller shall design a water flood fire suppression system designed in accordance with applicable requirements of ASME AG-1, subsubarticle FE-4620, and MDSs in section 2 of the MR. Seller shall account for increased pressure inside the carbon bed vessel caused by activation of the fire suppression system and flooding of the carbon bed with water. (i.e. PSV valves with vent lines routed to the alternate bed.) Seller shall work closely with Buyer in determining required flowrates for fire suppression water.

3.1.8 The Activated Carbon Bed Adsorber units and all permanently attached appurtenances (i.e. piping manifold, insulation, valves, and maintenance platforms) shall be designed to fit within the space envelope specified on the MDSs in section 2 of the MR.

3.1.9 Piping including supports shall be designed per the requirements of ASME B31.3 (*Process Piping*). Flanges used for connection to Buyer's piping shall be class 150 and meet the requirements of ASME B31.3.

3.1.10 The CFD model and analysis, thermal analysis, Activated Carbon Bed Adsorber analysis, and seismic analysis to be provided per this specification must verify that the final detailed design of the Activated Carbon Bed Adsorber and support frame meets the requirements set forth in this specification.

3.1.11 Each Activated Carbon Bed Adsorber Bed unit shall include all items listed or implied including, but not limited to, the following:

- Housing with inlet, outlet, support frame with anchorage provisions, platform supports, discharge filter receiver, piping connections and manifolds for testing and sampling, piping connections for pressure drop indication, insulation supports and hold-downs, lifting lugs, internal baffles, and mixing vanes (if mixing vanes required).
- Fire suppression system, inlet and drain, shall include isolation valves and piping to equipment edge with flange.
- Activated Carbon Bed Adsorbers, with pneumatic loading and gravity unloading of activated carbon.
- Platform with grating and guardrails

3.1.12 All testing and sampling piping, connections, ports, and manifolds shall be permanently attached to the Activated Carbon Bed Adsorbers and easily accessible for shop and field testing. The Seller shall work closely with the Buyer to determine best locations for testing and sampling piping, connections, ports, and manifolds.

3.1.13 The Activated Carbon Bed Adsorbers shall be designed for use with a bag-in/bag-out procedure to be developed by the Seller to facilitate adsorber removal and replacement operations. The Seller shall work closely with the Buyer on developing the bag-in/bag-out procedure.

3.1.14 The Activated Carbon Bed Adsorber shall be designed to attach insulation to the exterior of the pressure boundary. The design shall ensure the insulation is installed per the requirements of Buyer Specification 24590-WTP-3PS-NN00-T0001 for *Hot and Anti-Sweat Thermal Insulation* and section 4.3 of this specification.

3.2 Basic Function

3.2.1 General

3.2.1.1 Each offgas stream consists of two (2) Activated Carbon Bed Adsorbers that can be operated in either series or parallel with the ability to isolate one unit for maintenance during operation. During normal operation, the Activated Carbon Bed Adsorbers will operate in a lead/lag series arrangement.

3.2.1.2 The Activated Carbon Bed Adsorber units are located directly downstream of HEPA filter banks operating with a minimum particulate removal efficiency of 99%.

3.2.1.3 Each Activated Carbon Bed Adsorber unit shall consist of a vessel, connecting piping, air actuated on/off control valves, adsorber bed(s), insulation, water deluge fire suppression system, and a discharge filter.

3.2.2 HLW Activated Carbon Bed Adsorber

3.2.2.1 HLW Activated Carbon Bed Adsorbers shall be used to remove mercury (Hg) from the HLW melter secondary offgas HOP system.

3.2.2.2 Each Activated Carbon Bed Adsorber vessel shall be designed with a Seller specified activated carbon media and number of beds to meet performance criteria specified in section 3.4 of this specification and the MDSs in section 2 of the MR.

3.2.3 LAW Activated Carbon Bed Adsorber

3.2.3.1 LAW Activated Carbon Bed Adsorber shall be used to remove mercury (Hg), iodine (I_2), HCl, and HF from the LAW melter secondary offgas LVP system.

3.2.3.2 Each Activated Carbon Bed Adsorber vessel shall be designed with a Seller specified activated carbon media and beds to meet performance criteria specified in section 3.4 of this specification and the MDSs in section 2 of the MR. The Seller may supply separate or mixed beds for acid gas removal.

3.3 Optional Electric Preheater

3.3.1 If determined necessary by Seller, to prevent condensate from forming in the activated carbon media during startup or after replacement, the Seller shall propose an electric preheater.

3.3.2 Electric preheater shall use an electric element and fan to preheat the carbon bed upon start-up or after media replacement.

3.3.3 The preheater shall be mounted on a 4 ft by 4 ft skid frame that must be located within the space envelope specified in the MDSs in section 2 of the MR.

3.3.4 Seller shall submit proposed control system and instrumentation for the preheater in accordance Buyer specification 24590-WTP-3PS-JQ07-T0001 *Instrumentation for Package Systems*, and with the requirements of this specification.

3.4 Performance

3.4.1 The Activated Carbon Bed Adsorber units shall be designed and fabricated to meet the mechanical and process requirements of this specification, appendix A, and the MDSs in Section 2 of the MR. Laboratory testing in accordance with appendix A shall show conformance with MDS performance requirements for mercury, iodine, and HF.

3.4.2 The Activated Carbon Bed Adsorber units shall be designed for a minimum service life of 40 years. Where specific components cannot meet the specified service requirement, they shall be identified, and a mechanism for their replacement either/or maintenance shall be incorporated into the design.

3.4.3 The Activated Carbon Bed Adsorbers shall be designed for a minimum adsorbent life expectancy as required by the MDSs when operating 8,760 hours per year.

3.4.4 As applicable to design, the root mean square of the velocities in a traverse shall be within ±15 % of the average velocity across the front face of the Activated Carbon Beds. If required, ports shall be provided on one foot intervals to confirm velocity distribution.

3.4.5 Instrumentation, valves, and related appurtenances shall meet the performance requirements of Buyer specification 24590-WTP-3PS-JQ07-T0001, *Instrumentation for Package Systems*.

3.4.6 Actuators for On/Off valves shall meet the performance requirements of Buyer specification 24590-WTP-3PS-JV15-T0001, *Actuators for On/Off Valves*.

3.5 Design Conditions

3.5.1 The Activated Carbon Bed Adsorber units shall be designed to meet design conditions specified in the MDSs in Section 2 of the MR.

3.5.2 The Activated Carbon Bed Adsorber units shall be considered non-ESF as defined in ASME AG-1, Article AA-1000.

3.5.3 The Activated Carbon Bed Adsorber units shall be designed to meet Level C service limits as defined in ASME AG-1, Paragraph AA-4214.

3.6 Environmental Conditions

3.6.1 The Activated Carbon Bed Adsorber units will be installed indoors in an area maintained between 59 °F and 95 °F dry-bulb temperature during normal operation. Nominal radiation exposure is targeted to be 2.5 mRad/hr.

3.6.2 Prior to installation, the Activated Carbon Bed Adsorber units may be stored outdoors at ambient temperature extremes ranging from (-)35 °F dry-bulb to 118 °F dry-bulb and a relative humidity of 0 to 100%.

3.7 Mechanical Requirements

3.7.1 General

3.7.1.1 Sample ports shall be provided downstream of each bed for monitoring HF.

3.7.1.2 Each carbon bed shall be equipped with three (3) vertical and three (3) horizontal ports to obtain physical samples at three locations within the bed. The Seller shall provide special tools to physically retrieve samples. Seller may also propose the use of cylindrical media samples located externally the housing.

3.7.1.3 Valves used to enable the Activated Carbon Bed Adsorber units to operate in either series or parallel and enable isolation of one unit for maintenance shall be air actuated and meet the requirements of Buyer specification 24590-WTP-3PS-PV00-T0001, *Technical Supply Conditions for Valves*, and 24590-WTP-3PS-JV15-T0001, *Actuators for On/Off Valves*. Valve type, fail position, material, and flange requirements shall be as specified on the MDSs in section 2 of the MR.

3.7.2 Loading System

3.7.2.1 Pneumatic loading shall lift activated carbon media to the fill chute. The carbon media shall be gravity loaded through the fill chute. If permissible in the equipment space envelope required on the MDSs, Seller may propose an alternative loading system using an integral jib crane to lift carbon media super sacks for bulk loading.

3.7.2.2 Pneumatic loading system shall be complete with hopper, piping, vacuum blower, mounting equipment, and air filters necessary to safely lift the activated carbon adsorbent media. If determined necessary by Seller, vibration equipment shall be designed and supplied for loading of the carbon media into the Activated Carbon Bed Adsorbers.

3.7.2.3 The loading equipment shall be transferable to other Activated Carbon Bed Adsorber units within that facility. Rate of loading shall be specified by the Seller to minimize possible damage or degradation of the Activated Carbon Media.

3.7.2.4 Transferable loading equipment may be located in maintenance aisle ways as shown in the MDSs in section 2 of the MR. Location shall be specified by the Seller. Seller shall work closely with the Buyer with respect to equipment size.

3.7.3 Unloading System

3.7.3.1 Spent carbon media shall be gravity unloaded directly into 55 gal drums for disposal. Seller shall allow for clearance of the 55 gal drum and bag-in/bag-out operations in accordance with applicable code requirements. If required to meet the space envelope specified in the MDSs, the Seller may propose the use an unloading system to elevate the carbon media into a 55 gal drum. Buyer prefers to use loading equipment for unloading.

3.7.3.2 If determined necessary by Seller, vibration equipment shall be designed and supplied for unloading of the carbon media.

3.7.3.3 Spent carbon is considered hazardous and potentially radioactive and must be contained during unloading through the use of a bag-out procedure as required in section 3.11 of this specification.

3.8 Discharge Filter Requirements

The discharge filters for the Activated Carbon Bed Adsorber units shall be rated for at least 300 °F with an efficiency of 99% at 5 microns and have a minimum capacity of two (2) times the design flowrate. Each discharge filter shall also be equipped with a differential pressure gage to measure pressure drop across the filter.

3.9 Lifting Requirements

3.9.1 Lifting lugs shall be installed on each Activated Carbon Bed Adsorber unit for balanced lifting and handling. Seller shall identify the weight and center of gravity of each unit and submit a report for Buyer review.

3.9.2 All lifting points shall be designed and tested in accordance with the requirements of Buyer specification 24590-WTP-3PS-G000-T0003, *Packaging, Handling, and Storage Requirements*. The allowable design stress shall equal the applicable code allowable design stress at ambient temperature.

3.9.3 The lifting lugs shall be designed to permit lifting of the Activated Carbon Bed Adsorber units without distortion or damage to the components or lifting lugs.

3.9.4 Lifting lugs shall be accessible without removal of covers and guardrails.

3.9.5 The lifting lugs must accept standard lifting equipment. Chain blocks or braiding shall not be permitted. If applicable, the lifting lugs shall be designed to accept Crosby shackles or equivalent meeting Federal Specification RR-C-271D.

3.9.6 Sampling and testing connections and ports shall not be used for lifting.

3.9.7 Seller shall provide any special designed equipment that is required to handle the component and is not available from a commercial source. Such equipment may include but is not limited to rigging devices such as spreader beams, structural lifting devices, strongbacks, and yokes. Rigging devices shall be designed, tested, and tagged in accordance with the applicable requirements of DOE-RL-92-36.

3.9.8 All lifting points on the Activated Carbon Bed Adsorber units shall be proof tested in shop. Test and examination certificates shall be provided to the Buyer for review.

3.10 Loadings

3.10.1 The Activated Carbon Bed Adsorber and support frames shall be self-supporting, capable of carrying the static loads of components, thermal expansion loads, seismic loads, full flood fire suppression water loads, and capable of handling the stresses imposed during shipment, installation, and operation.

3.10.2 Loads to be considered for the structural design of the Activated Carbon Bed Adsorbers and support frame shall be in accordance with applicable codes, standards, and reference documents listed in section 2 of this specification. As a minimum, loadings and stresses to be imposed shall meet Level C service limits as described in ASME AG-1, Paragraph AA-4214 and be in accordance with Buyer specification 24590-WTP-3PS-FB01-T0001, *Engineering Specification for Structural Design Loads for Seismic Category III and IV Equipment and Tanks.*

3.10.3 Loads and stresses imposed for design of the vessel housings shall be in accordance with ASME Boiler and Pressure Vessel Code, Section VIII, Div. 1.

3.10.4 Nozzle design shall consider seismic, thermal, and combination loads. Loads shall be in accordance with the requirements of the MDSs in section 2 of the MR.

3.11 Bag-in/Bag-out Procedure Requirements

3.11.1 Seller shall provide a detailed bag-in/bag-out procedure using a pneumatic loading system and gravity unloading of the Activated Carbon Bed Adsorber media and discharge filters using PPE, bags, a glovebag (if required), and special tools. Procedure shall assume carbon bed is isolated and not in operation. If unloading system is used, Seller's bag-out procedure shall include this additional equipment.

3.11.2 Bag-in/bag-out procedure shall note the necessary steps needed to safely bag-out media after a water deluge (i.e. additional drying of media, vibration, etc.).

3.11.3 Procedure shall include proposed means of activated carbon adsorbent media delivery (i.e. 40 lb bags, 55 gal drums, etc.).

3.11.4 Seller shall work with Buyer to determine PPE requirements to be included in the procedure for personnel conducting adsorbent and filter removal and replacement.

3.11.5 If a glovebag is required to perform the bag-in/ bag-out procedure, it shall conform to AGS-G001, and ERDA 76-21, Paragraph 2.2.1 and Chapter 7. Seller shall work with Buyer to determine whether or not a glovebag will be necessary.

3.11.6 Drawings of bags and glovebag (if glovebag is required) to be used shall be included in the bag-in/bag-out procedure. Drawings shall show configuration with dimensions and identify any equipment, filters, either/or apparatus to be an integral part of the bags and glovebag. Drawings shall also identify material, manufacturer, either/or model numbers of all bag and glovebag components.

3.11.7 The bag-in/bag-out procedure shall be written to ensure that confinement is not broken at any time.

3.11.8 Personnel shall not need to break the plane of the pressure boundary or discharge filter access openings at any time to perform the bag-in/bag-out procedure.

3.12 CFD Model and Analysis Requirements

3.12.1 The 3-D CFD model, required per section 1 of this specification, shall demonstrate the effects of internal structures and components on offgas flow distribution through the Activated Carbon Bed Adsorbers.

3.12.2 The 3-D CFD model shall include the following components of the Activated Carbon Bed Adsorber units:

- Housing including inlet (with transition fittings and necessary inlet piping to model turbulent flow entering the unit), outlet, inlet plenum, outlet plenum, discharge filter, manifolds for testing and sampling, and any required internal baffles, mixing vanes, and/or cross-venting holes.
- Activated carbon bed(s).

3.12.3 The 3-D graphical results from the CFD model shall include:

- Analysis of changes to the Activated Carbon Bed Adsorber units to enhance offgas flow effectiveness.
- Analysis of the effect of including additional baffles, mixing vanes, and/or cross-venting holes as required to study local offgas flow effects to achieve uniform offgas flow distribution through the adsorbers.
- Analysis of changes to the Activated Carbon Bed Adsorber units to minimize the overall dimensions.

3.12.4 The 3-D graphical results from the CFD model shall demonstrate uniform offgas distribution through the adsorber beds at 75% of the design flowrate with ± 10 % variation in flowrate.

3.12.5 Provide pressure drop to velocity relationship per adsorber bed(s) as part of the CFD analysis based on carbon media testing.

3.12.6 The Seller shall provide the documented results from the 3-D CFD analysis in report form to the Buyer. The CFD report shall provide a complete offgas flow analysis and shall include 3-D graphical results of the model and any calculations performed. The reports shall, at minimum, include:

- Definition of analysis objective
- Identification of equipment for analysis
- General description of equipment supplemented by drawings and sketches
- Functional requirements per this specification
- Purpose of analysis
- Definition of design criteria and inputs with corresponding sources
- Results of literature searches and other applicable background data
- Applicable codes, standards, and reference documents per section 2 of this specification broken down by chapter, section, and paragraph, as applicable
- Analysis methodology
- Description of computer(s) used to conduct analysis
- Description of software/computer programs used for modeling and any calculations and limitations, justification for choice of program, and evidence and description of program validation method.
- Assumptions (indicate those that must be verified as the design proceeds)
- Analyses conducted with results
- Summary of analysis results
- Conclusions
- Location for Buyer review signatures

All assumptions shall be plainly identified and data present (including their uncertainty) with precise logic. Actual accomplishments of the work shall be clearly stated.

3.12.7 The final CFD report shall convey information to several disciplines, many of whom may be less familiar with the general subject than the authors. Care shall be taken to use simple statements and expressions and to make statements as concise as possible. If highly technical terms are necessary, they shall be adequately explained and defined.

3.13 Thermal Requirements

3.13.1 Refer to MDSs in section 2 of the MR for mechanical design data pertaining to thermal design information.

3.13.2 Thermal analyses shall include the effects of stresses resulting from potential variations in temperatures due to startup, normal operation, shutdowns, carbon bed fire, and thermal cycling of the Activated Carbon Bed Adsorber units. Analyses shall determine nozzle deflections in all directions per thermal expansion or other approved method. The calculations shall consider that the maintenance platforms shall be connected together with mechanical fasteners during normal operation.

3.13.3 Thermal analyses shall confirm the insulation temperature of Seller selected insulation and all exterior uninsulated portions of the Activated Carbon Bed Adsorber units with potential for personnel exposure, do not exceed 140 °F at maximum design temperature, in accordance with the requirements of Buyer specification 24590-WTP-3PS-NN00-T0001, *Hot and Anti-Sweat Thermal Insulation*. Thermal calculations shall also confirm heat lose to the room is within the requirements of the MDSs. Refer to section 4.3 of this specification for addition insulation requirements.

3.13.4 The thermal analyses shall confirm the thickness and extent of insulation required on the bottom of the Activated Carbon Bed Adsorber units so that the average temperature of the Buyer's concrete foundation directly under and within three feet of the skid boundary does not exceed 100 °F.

3.13.5 Seller shall perform a thermal analysis to determine and define the thermal conditions generated during a carbon bed fire. This analysis shall define the maximum and design temperatures for the carbon bed pressure boundary and isolation valves. Seller shall assume a one-hour response time from carbon bed isolation, based on differential CO detection, to activation of the water deluge fire suppression system. Design temperature determined by this thermal analysis shall be used in ASME Boiler and Pressure Vessel Code, Section VIII, Div.1 calculations for design of the Activated Carbon Bed Adsorber pressure boundary. Analysis shall confirm valve selection (valve material, seat material, leak tightness, etc.) for pressure boundary valves and process isolation valves.

3.14 Activated Carbon Bed Adsorber Design Analysis Requirements

3.14.1 The Seller shall conduct and submit separate Activated Carbon Bed Adsorber design analyses for LAW and HLW facilities. The design analysis of the Activated Carbon Bed Adsorber units shall be conducted by an Activated Carbon Bed Adsorber expert to determine the expected adsorbent changeout frequency for the final Activated Carbon Bed Adsorber design. Seller shall provide personnel qualifications to the Buyer for review prior to beginning adsorber design.

3.14.2 Analysis shall be conducted considering operation of the Activated Carbon Bed Adsorber units at design conditions outlined in this specification and MDSs.

3.14.3 Analysis shall determine expected adsorbent changeout frequency based on the gas composition and load information specified in the MDSs in Section 2 of the MR.

3.14.4 Assume that the offgas flow through the Activated Carbon Bed Adsorbers may vary as much as ± 10 % from the design flowrate specified in the MDSs in section 2 of the MR.

3.14.5 Seller shall provide the documented results of the Activated Carbon Bed Adsorber analysis with any graphical results, as applicable, in report form to the Buyer prior to fabrication. Refer to section 3.12.6 and 3.12.7 for the minimum requirements of the report.

3.14.6 The final Activated Carbon Bed Adsorber design analysis report shall convey information to several disciplines, many of whom may be less familiar with the general subject than the authors. Care shall be taken to use simple statements and expressions and to make statements as concise as possible. If highly technical terms are necessary, they shall be adequately explained and defined.

3.15 Electrical Requirements

3.15.1 Electrical equipment necessary to meet the requirements of this specification and appendices shall be designed, fabricated, and tested in accordance with Buyer specification 24590-WTP-3PS-EKP0-T0001, *Electrical Requirements for Packaged Equipment.*

3.15.2 The Buyer will provide a single feed for each Activated Carbon Bed Adsorber unit. The Seller shall be responsible for determining electrical load and for the distribution of power within the Activated Carbon Bed Adsorber unit. The Seller shall provide a disconnect switch at the connection point for the Buyer's power feed for each Activated Carbon Bed Adsorber.

3.15.3 All electrical equipment and components shall be listed with Underwriters Laboratories (UL) and carry the UL label. Equipment and components listed and labeled by another OSHA recognized NRTL will be acceptable only after receipt of prior written approval from the Buyer. Equipment not listed or labeled may be required to have a UL "Field Evaluated Product" marking.

3.15.4 Motors shall operate continuously under running conditions at rated load and meet the requirements of Engineering Specification 24590-WTP-3PS-MUMI-T0002, *Low voltage Induction Motors.*

3.16 Instrumentation and Control Requirements

3.16.1 General

3.16.1.1 Instrumentation included in the Seller's scope of work shall meet the requirements of Buyer specification 24590-WTP-3PS-JQ07-T0001, *Instrumentation for Package Systems*. Refer to Figure 1 for general instrumentation layout and additional requirements.

3.16.1.2 Analyzers and analyzer systems included in the Seller's scope of work shall meet the requirements of Buyer specification 24590-WTP-3PS-JA03-T0001, *Gas Analyzers*. Refer to Figure 1 for general analyzer layout and additional requirements. Seller shall work closely with the Buyer in establishing the performance criteria and location of the Hg analyzer(s).

3.16.2 Activated Carbon Bed Adsorber

3.16.2.1 The following instruments shall be included with the Activated Carbon Bed Adsorber Units as a minimum, refer to section 1.6 of this specification for additional QA with subsequent testing requirements for these instruments:

- Inlet temperature element
- Inlet CO analyzer
- Differential pressure instrument on each Activated Carbon Bed Adsorber vessel
- Carbon Bed temperature elements (4 per bed) with thermowells.
- Radar level indicator for each Activated Carbon Bed Adsorber vessel
- Differential pressure instrument on each discharge filter
- Outlet CO analyzer on each Activated Carbon Bed Adsorber vessel
- Outlet temperature element

3.16.2.2 The output of permanently installed analyzers is preferred to be Foundation® Fieldbus (FFB) compatible. If FFB compatibility is not available the Seller shall propose interfacing devices that convert signals from their standard format to the FFB protocol. These devices shall be supplied by the Seller and used only when a native FFB device is not available. The same communication, testing, and registration requirements apply to Fieldbus converters as to native Fieldbus devices. All converters are subject to Buyer's review.

3.16.2.3 As listed in 3.16.2.1, each Activated Carbon Bed shall have at least four (4) temperature instruments and transmitters. Temperature elements shall be provided with thermowells that meet the inspection and testing requirements per the specified QL level and the requirements of Buyer specification 24590-WTP-3PS-JQ07-T0001, *Instrumentation for Package Systems*. Seller shall work closely with the Buyer in determining the location of the temperature instruments.

3.16.2.4 As listed in 3.16.2.1, each Activated Carbon Bed vessel shall have a radar level indicator. Radar level indicator shall be Ohmart-Vega meeting Appendix B requirements of Buyer specification 24590-WTP-3PS-JQ07-T0001, *Instrumentation for Package Systems*. Seller proposed substitutions shall be well documented as to the relative technical advantages and exclude commercial considerations.

3.16.2.5 Buyer shall provide control system required to operate the Activated Carbon Bed Adsorber Units. Seller shall provide control logic required to operate the Activated Carbon Bed Adsorber Units including the fire suppression system in accordance with the performance requirements of this specification and MDSs.

3.16.2.6 The Activated Carbon Bed Adsorber Units shall be designed with a single instrumentation tie-in point for connection to Buyer's Integrated Control Network (ICN). Design drawings shall show the location of instrumentation tie-in point.

3.16.3 Optional Preheater

3.16.3.1 Seller shall propose control system for electric pre-heater with over heat protection in accordance with section 3.3 of this specification.

3.16.3.2 Proposed control system shall be in accordance with the requirements of Buyer specification 24590-WTP-3PS-JQ07-T0001, *Engineering Specification for Instrumentation for Package Systems*.

3.17 Accessibility and Maintenance

3.17.1 General

3.17.1.1 Accessibility and maintenance requirements shall be per this specification.

3.17.1.2 Seller's recommended accessibility and maintenance requirements for each piece of equipment shall be included in the Seller's applicable submittals.

3.17.1.3 Frequency of inspection and maintenance intervals shall be in accordance with Seller's recommendations.

3.17.1.4 All valves shall be accessible for maintenance and operation. Maintenance and replacement of valves shall be outlined in Seller's operation and maintenance procedures.

3.17.1.5 Seller shall design and supply any special tools required to perform maintenance activities and describe its use in applicable procedures.

3.17.1.6 If the equipment weight (i.e. valves, actuators, loading/unloading equipment, etc.) is in excess of 50 pounds the Seller shall design and supply jib cranes, lifting beams, or rigs in accordance with the requirements of DOE-RL-92-36.

3.17.2 Platform Requirements

3.17.2.1 Equipment, instrumentation, and electrical components that are 6 feet and over from ground level shall be provided with permanent work platforms with fixed ladders/stairs to perform maintenance.

3.17.2.2 The Activated Carbon Bed Adsorber unit maintenance platforms and ladders shall be designed to meet the requirements set forth in WAC 296-24, *General Safety and Health Standards* and AISC 9th Edition.

3.17.2.3 The Activated Carbon Bed Adsorber unit maintenance platforms shall include guardrails. The guardrails shall be made out of piping.

3.17.2.4 The guardrails shall be designed per WAC 296-24-750.

3.17.2.5 The minimum live load for the column platforms shall be 100 psf. If platforms are to be used for laydown during maintenance, use a minimum live load of 250 psf.

3.17.2.6 The fixed ladder to be installed on the maintenance platforms shall meet the requirements set forth in WAC 296-24-810.

3.17.2.7 The maintenance platforms must be able to be attached Activated Carbon Bed Adsorber units without welding after the adsorbers are placed in the HLW and LAW facilities.

3.17.2.8 All openings in guardrails of each Activated Carbon Bed Adsorber unit maintenance platform shall have a safety gate or chain designed per the requirements of WAC 296-24-750.

4 Materials

4.1 General

4.1.1 Material used for the pressure boundary including control instrumentation shall comply with Buyer specification 24590-WTP-3PS-G000-TP002, *Positive Material Identification* (PMI). In accordance with the requirements of the PMI specification the Cr, Ni, Mo, content of the pressure boundary materials including weld consumables must be verified before and after fabrication.

4.1.2 Seller shall submit manufacturer cut sheets and MSDSs for all gaskets used for the pressure boundary. All gaskets, seal pads, caulks, and adhesives used must be certified for contact with austenitic stainless steel.

4.1.3 The Activated Carbon Bed Media shall be acid washed to comply with WTP project safety requirements. Acid washing of the carbon media prior to impregnation is required to reduce impurities in the carbon media to less than 0.1 weight percent carbonate, oxide, or nitrate.

4.1.4 Performance of the Activated Carbon Bed for removal of HF and radioactive iodine (I^{129}) associated with the LAW system is required, (an HF and iodine guard bed is not required for the HLW offgas). The guard bed for HF, located upstream of the mercury removal bed, may contain adsorbent such as acid washed activated carbon or activated alumina, The activated alumina media is not required to be acid washed.

4.1.5 The Activated Carbon Bed Media shall meet applicable ASTM methods for particle size distribution.

4.2 Construction

4.2.1 Materials used in the construction of the Activated Carbon Bed Adsorber units shall conform to the requirements of ASME AG-1, Article AA-3000, ASME AG-1a, Article HA-3000, this specification, and the MDSs in section 2 of the MR. Material property and performance data for any materials not covered in ASME AG-1, ASME AG-1a or this specification shall be submitted to the Buyer for review prior to incorporation into the design of the Activated Carbon Bed Adsorber units. All materials in contact with the adsorber and process piping shall be 300 series stainless steel. Performance data shall indicate that material is acceptable for environmental and specific service conditions.

4.2.2 All materials used in the construction of the Activated Carbon Bed Adsorber units shall be resistant to radiation levels indicated in subsection 3.6 of this specification and be able to operate under environmental and design conditions described in ASME N509 (paragraph 4.4) and MDSs in section 2 of the MR.

4.2.3 Seller shall maintain a record of ASME or ASTM numbers, material test reports, and manufacturer material certifications for all materials used for construction of the Activated Carbon Bed Adsorber units. Seller shall provide copies to the Buyer.

4.2.4 All materials used in the manufacture of the Activated Carbon Bed Adsorber units, support frames, and shims shall be new and unused. Where specific criteria are not provided, material selection shall be determined by the Seller and have properties and composition suitable for the specific service conditions and consistent with this specification.

4.2.5 Dissimilar metal couples shall be avoided due to corrosion potential.

4.2.6 Activated Carbon Bed Adsorber housing material shall be in accordance with the requirement of the MDSs. Discharge filter covers shall be constructed of 316 L stainless steel.

4.2.7 The Activated Carbon Bed Adsorber support frames, pipe supports, and maintenance platforms shall be made of Carbon Steel. Special attention shall be placed on securing the stainless steel carbon bed adsorbers and piping to the carbon steel support structure to prevent galvanic corrosion.

4.2.8 The discharge filter frame shall be composed entirely of 316 L stainless steel.

4.2.9 Materials used in the construction of the Activated Carbon Bed Adsorber units shall be resistant to radiation levels indicated in subsection 3.6 of this specification.

4.3 Insulation

4.3.1 The Seller shall provide detailed insulation installation procedures complete with sketches showing methods and details for applying and securing external insulation, metal jacketing, etc., to the Activated Carbon Bed Adsorber Units and necessary piping. The insulation procedures shall be in accordance with PIP INIH 1000 and NACE Standard RP0198, Buyer specification 24590-WTP-3PS-NN00-T0001 *Hot and Anti-Sweat Thermal Insulation*, and this specification.

4.3.2 Procedures for insulation thicknesses greater than three (3) inches shall be applied in multiple layers with staggered joints. Each layer of multiple layer and double insulation shall be held in place separately.

4.3.3 Procedures for insulation installation shall include jacketing the insulation with 304 L stainless steel following the requirements of Buyer specification 24590-WTP-3PS-NN00-T0001 *Hot and Anti-Sweat Thermal Insulation*, and this specification. The stainless steel jacketing shall be 0.024 inches thick flat and smooth sheet. The jacketing shall be furnished in the annealed or soft condition with a regular 2B mill finish and have a factory applied moisture barrier.

4.3.4 Seller shall recommend cements, mastics, and adhesives that will be suitable for the maximum design temperature of the Activated Carbon Bed Adsorber units. The mixing of cements, mastics, etc., shall be done with deionized water. All recommended cements, mastics, adhesives must by certified for contact with austenite stainless steel.

4.3.5 Procedures shall include cleaning instructions for surfaces to be insulated. Procedures should note that surfaces to be insulated must be dry and free of loose scale, dirt, and oil before the insulation is applied.

4.3.6 The design shall provide for removable/replaceable insulation on flanges, manholes, doors, and access openings.

4.3.7 All recommended insulation components, including facings, mastic, and adhesives, shall meet ASTM E84 fire hazard rating not to exceed 25 for flame spread and 50 for fuel contributed and smoke developed. Ratings used are determined by Underwriters Laboratories, Inc. (UL).

4.4 Piping

4.4.1 All applicable materials used for piping and related appurtenances shall be in accordance with the requirements of the MDSs and Buyer specification 24590-WTP-3PB-P000-TS11V *Piping Material Classification Pipe Class S11V*, for HLW, and Buyer specification 24590-WTP-3PB-P000-TS11N *Piping Material Classification Pipe Class S11N*, for LAW.

4.4.2 Special attention shall be placed on securing stainless steel piping to the carbon steel support structure to prevent galvanic corrosion.

4.5 Prohibited Materials

4.5.1 Mercury and other low melting point metals, their alloys, or materials containing such metals as their basic constituents shall not be used in the construction of the Activated Carbon Bed Adsorber units and shims.

4.5.2 Molybdenum and halides shall not be used in direct contact with stainless steel.

4.5.3 Asbestos shall not be included in any component of the Activated Carbon Bed Adsorber units.

4.5.4 Halide containing materials shall not be used in any component of the Activated Carbon Bed Adsorber units.

4.6 Storage of Special Materials (e.g., stainless steel) prior to work

4.6.1 Stainless steel is susceptible to corrosion caused by the contact and interaction with incompatible materials. All stainless steel material shall be stored in separate areas away from other materials.

4.6.2 Storage of activated carbon and testing media shall be per the manufacturers instructions to prevent contamination and degradation. Activated carbon and testing media storage requirements and instructions shall be provided by the Seller to the Buyer for review prior to purchase.

5 Fabrication

5.1 General Requirements

5.1.1 The Activated Carbon Bed Adsorber units shall be fabricated per this specification and the applicable documents listed in section 2 of this specification.

5.1.2 ASME Boiler and Pressure Vessel Code, Section VIII, Div. 1 shall only be applied to the fabrication of the housing pressure boundary of the Activated Carbon Bed Adsorber units. The housing pressure boundary shall be fabricated in accordance with ASME Boiler and Pressure Vessel Code, Section VIII, Div. 1. **U-stamp and National Board Registration for the Activated Carbon Bed Adsorbers are not required**

5.1.3 Identification of fabrication methods shall be included in the detailed design of the Activated Carbon Bed Adsorber units.

5.1.4 All fabrication shall be performed by personnel qualified in accordance with this specification and applicable documents in section 2 of this specification.

5.1.5 Piping shall be fabricated in accordance with the requirements of ASME B31.3 and Buyer specification 24590-WTP-3PS-PS02-T0001, *Shop Fabrication of Piping*.

5.2 Assembly

5.2.1 Flatness of the completed Activated Carbon Bed Adsorbers and support frames shall be 1/8 inch per foot minimum, with no greater than 3/16 inch over the entire length, except for areas around cutouts. Areas around cutouts shall be flat within 1/16 inch per foot.

5.2.2 Cutout locations shall be within ± 1/8 inch and cutout size shall be within ± 1/16 inch.

5.2.3 The Activated Carbon Bed Adsorber units and shims shall have edges that are both smooth and not sharp to the touch.

5.2.4 The method of fabrication shall minimize the number and amount of seams, overlaps, or other discontinuities, which could trap radioactive contamination.

5.3 Tolerances

All tolerances, surface flatness, and finish requirements for assembly and fabrication shall be determined and specified by the Seller when completing the detailed design to meet performance requirements set forth in this specification. At a minimum, all tolerances, surface flatness, and finish requirements shall be per all applicable codes, standards, and reference documents in section 2 of this specification.

5.4 Welding

5.4.1 Seller shall develop detailed welding, weld inspection, NDE, and weld repair procedures for fabrication of the Activated Carbon Bed Adsorber units and submit them to the Buyer for review prior to fabrication. Procedures shall include acceptance criteria. The procedures shall conform to the following, as applicable:

- Buyer Specification 24590-WTP-3PS-SS00-T0001
- Buyer Specification 24590-WTP-3PS-SS00-T0002
- Buyer Specification 24590-WTP-3PS-NWP0-T0001
- Buyer Specification 24590-WTP-3PS-MVB2-T0001 (Pressure Boundary Only)
- ASME AG-1a, Article HA-6000
- ASME AG-1, Articles FE-6000
- ASME Boiler and Pressure Vessel Code, Section VIII, Div. 1 (Pressure Boundary Only)
- ASME B31.3
- AWS D1.6

5.4.2 Activated Carbon Bed Adsorber welding, weld inspection, NDE, and weld repair shall be carried out in accordance with the applicable procedures developed per the previous paragraph.

5.4.3 Activated Carbon Bed Adsorber welder qualifications shall be performed in accordance with requirements of the referenced specifications and codes listed in section 5.4.1 of this specification.

5.4.4 Welding or material manipulation shall be carried out indoors and only when the ambient, piping, or plate temperature is above 41°F, or higher where elevated temperatures are called for by a process.

5.4.5 Personnel performing Activated Carbon Bed Adsorber weld inspections shall be qualified in accordance with ASME AG-1, Paragraph AA-6335, ASME Boiler and Pressure Vessel Code, Section VIII, Div. 1, Buyer specification 24590-WTP-3PS-SS00-T0002, *Specification for Welding of Structural Stainless Steel and Welding of Structural Carbon Steel to Structural Stainless Steel* and 24590-WTP-3PS-SS00-T0001 *Specification for Welding of Structural Carbon Steel.*

5.4.6 Repairs required as a result of weld rejection by either the Seller's or Buyer's inspection shall be fully documented in accordance with Seller's Quality Assurance Program (QAP). Activated Carbon Bed Adsorber weld repairs shall be performed in accordance with ASME AG-1, subsubarticle AA-6330 and ASME Boiler and Pressure Vessel Code, Section VIII (housing pressure boundary only). Weld repair records shall be included with Seller's quality verification document package to be submitted to Buyer.

5.4.7 Joints and seams shall be fabricated in accordance with ASME AG-1a, subsubarticle HA-4330 and ASME Boiler and Pressure Vessel Code, Section VIII (housing pressure boundary only).

5.4.8 Welding procedures and welder qualification records shall be submitted to Buyer for review and permission to proceed prior to start of fabrication. Each procedure shall be prepared and qualified in accordance with the requirements of the listed standards in section 5.4.1 of this specification.

5.4.9 Seller shall submit a weld verification report including a weld map which identifies the specific weld procedure and NDE procedure utilized for each weld joint.

6 Tests and Inspections

6.1 General Requirements

6.1.1 The Activated Carbon Bed Adsorber units shall be tested and inspected per this specification, applicable documents listed in section 2 of this specification, and all appendices, addenda, and attachments. Seller shall submit shop and field test plans for Buyer review.

6.1.2 Seller shall conduct and be responsible for all testing and inspections required per this specification, applicable codes, applicable standards, and reference documents.

6.1.3 Seller shall submit a detailed test and inspection plan identifying all the inspections and tests planned, including recommended witness and hold points. Buyer's inspector will advise the Seller of witness and hold points and identify the shop tests that the Buyer intends to witness.

6.1.4 Seller shall develop and submit to Buyer detailed test procedures for conducting all shop and field acceptance testing required per this specification, applicable codes, standards, and reference documents for review by the Buyer prior to Activated Carbon Bed Adsorber fabrication. Procedures shall include acceptance criteria and detailed drawings of the shop and field testing configurations. Seller shall identify on drawings location of taps, ports, piping connections, and/or manifolds made on housing and ductwork in order to take measurements during shop and field tests. These taps, ports, piping connections, and/or manifolds shall be temporarily capped for use in the field during acceptance testing. Seller shall provide instructions on permanently sealing these taps after field acceptance testing. Drawings shall be scaleable and shall include plan and elevation views of the following:

- Activated Carbon Bed Adsorber
- Any Seller furnished materials, fittings, and ductwork required to perform the tests
- Seller furnished discharge filter(s)
- All Seller furnished equipment, apparatus, and instrumentation

6.1.5 Seller shall develop and submit to Buyer detailed testing and inspection procedures for conducting all testing and inspections required per this specification, applicable codes, standards, and reference documents for review by the Buyer prior to Activated Carbon Bed Adsorber fabrication.

6.1.6 Seller shall complete reports of all testing and inspections and submit them to Buyer. Reports shall identify the component tested, date performed, applicable test procedure, acceptance criteria, person performing the test or inspection, test results, and conclusions. Drawings of test setups shall be included. All testing and inspection results shall be certified.

6.1.7 Control and calibration of measuring and test equipment shall be in accordance with ASME AG-1, subsubarticle AA-5130.

6.1.8 All shop testing and inspection instruments used to conduct testing on the Activated Carbon Bed Adsorber units shall meet the requirements set forth in ASME AG-1, Article TA-3000. All testing and inspection instruments shall be in calibration and traceable to the appropriate national standard.

6.1.9 Any non-conforming work, in accordance with Seller's acceptance criteria, shall be redone by the Seller at Seller's cost.

6.2 Weld Testing and Inspection

6.2.1 Activated Carbon Bed Adsorber welds shall be inspected, examined, and tested in accordance with ASME AG-1, subsubarticle AA-6330, ASME Boiler and Pressure Vessel Code, Section VIII, Div. 1 (housing pressure boundary only), and Buyer specification 24590-WTP-3PS-MV00-TP001, *Pressure Vessel Design and Fabrication*.

6.2.2 Activated Carbon Bed Adsorber support frame welds shall be inspected, examined, and tested in accordance with Buyer specification 24590-WTP-3PS-SS00-T0002, *Engineering Specification for Welding of Structural Stainless Steel and Welding of Structural Carbon Steel to Structural Stainless Steel* and 24590-WTP-3PS-SS00-T0001, *Engineering Specification for Welding of Carbon Structural Steel.*

6.2.3 Piping shall be inspected, examined, and tested in accordance with ASME B31.3, Buyer specification 24590-WTP-3PS-PS02-T0001, *Shop Fabrication of Piping*, and Buyer specification 24590-WTP-3PS-NWP0-T0001, *General Welding and NDE Requirements for Supplier Fabricated Piping.*

6.2.4 Seller shall submit Radiographic, Liquid Penetrant, and Ultrasonic Examination procedures for review, prior to fabrication.

6.2.5 Exposed radiograph film must be submitted along with technique and reader sheets. Film must be packaged in such a manner as to preclude moisture and handling damage.

6.3 Personnel Qualifications

6.3.1 All inspection and testing shall be performed by personnel qualified per the requirements set forth in this specification and all applicable documents in section 2 of this specification.

6.3.2 Seller shall submit personnel qualification documents, including years of experience for Seller's inspection and test personnel, for Buyer review.

6.4 Laboratory Tests

6.4.1 Seller shall conduct and be responsible for laboratory testing of Activated Carbon Media in accordance with appendix A of this specification. Laboratory tests shall be conducted in accordance with the applicable sections of NQA-1. The test plan shall include a matrix cross-referencing the QA requirements to implementing procedures for the work and justifying elements that are not applicable.

6.4.2 Seller shall submit laboratory test plan and procedures for Buyer review prior to the start of testing in accordance with the requirements of the G-321-E in section 3 of the MR.

6.4.3 A final report shall be submitted for Buyer review in accordance with the requirements of appendix A. The final report shall support the engineering design of the Activated Carbon Bed Adsorber Units showing, in addition to the requirements of appendix A for the final report, conformance with required DFs as outlined in section 3.4 of this specification and specified in the MDSs. Any effects related to the design of the Activated Carbon Bed Adsorber Units shall be identified in the final report.

6.5 Shop Tests

6.5.1 Seller shall provide all materials, labor, tools, equipment, apparatus, instrumentation, testing media, and challenge gas to conduct all shop testing on the Activated Carbon Bed Adsorber units.

6.5.2 All shop tests requiring that adsorbent media be installed in the Activated Carbon Bed Adsorber units shall be conducted using activated carbon. The Seller shall ensure that the Activated Carbon Bed Adsorber does not become contaminated or degraded at any time before, during, or after completion of shop testing.

6.5.3 Testing media shall be loaded into adsorber cells and tested per applicable sections of ASME AG-1, Article FE-5000. Seller shall issue manufacturer's information for testing media to the Buyer for review prior to purchase.

6.5.4 Electrical and instrumentation tests shall be conducted in accordance with the requirements of Buyer specification 24590-WTP-3PS-EKP0-T0001 *Electrical Requirements for Packaged Equipment*, and 24590-WTP-3PS-JQ07-T0001 *Instrumentation for Package Systems*. Electrical and instrumentation test reports shall be submitted for Buyer Review.

6.5.5 Seller shall conduct the following acceptance tests in the shop on each unit using air at ambient temperature, prior to shipment:

- Visual Inspection
- Structural Capability Test
- System Bypass Test
- Mechanical Test
- Differential Pressure Test
- Airflow Distribution Test
- Electrical Air Heater Performance Test (per design)
- Fire suppression hydrostatic vessel pressure tests

All Activated Carbon Bed Adsorber shop acceptance testing procedures shall conform to ASME AG-1 (Section TA), N509 (Section 9), N510, and ERDA 76-21 (Chapter 8).

6.5.6 Fire suppression system shall be tested per Seller's procedure. Carbon beds shall be flooded with fire suppression water and unloaded to simulate field conditions. Activated Carbon Media is not required to be in place for fire suppression test.

6.5.7 Pneumatic testing per ASME Boiler and Pressure Vessel Code, Section VIII, Div. 1 shall be conducted on the Activated Carbon Bed Adsorber housing pressure boundary. **U-stamp and National Board Registration for the Activated Carbon Bed Adsorbers are not required.**

6.5.8 Structural Capability Test: Conduct at pressure and conditions specified in the MDSs.

6.5.9 System Bypass Test: At ± 10 % of design flowrate through the Activated Carbon Bed Adsorber, challenge gas leakage rate shall not exceed 0.1 % at 99.9 % efficiency.

6.5.10 All test results shall be documented, certified, and submitted to the Buyer for review.

6.6 Site Tests

All Activated Carbon Bed Adsorber field acceptance testing procedures shall conform to ASME AG-1 (Section TA), N509 (Section 9), N510, and ERDA 76-21 (Chapter 8).

6.7 Bag-in/Bag-out Procedure Demonstration

6.7.1 Demonstration shall be conducted in Seller's shop on one (1) of the fully assembled Activated Carbon Bed Adsorber units and witnessed by Buyer's Representatives. The Activated Carbon Bed Adsorber to be used for the demonstration shall be chosen by the Buyer.

6.7.2 Demonstration shall include removal and replacement of one (1) activated carbon adsorber bed adsorbent and the discharge filter(s) for one (1) Activated Carbon Bed Adsorber unit for each HLW and LAW facility. Actual adsorber bed adsorbent to be removed shall be chosen by the Buyer.

6.7.3 When conducting the demonstration, Seller personnel shall be wearing all PPE required per the final bag-in/bag-out procedure.

6.7.4 Field conditions shall be simulated in the shop when performing the bag-in/bag-out procedure demonstration, which will include pulling a vacuum on the Activated Carbon Bed Adsorber, room clearance, and lifting constraints.

7 Preparation for Shipment

7.1 General Requirements

7.1.1 The Activated Carbon Bed Adsorber units shall be packaged/prepared for shipment, handled, and stored in accordance with Buyer specification 24590-WTP-3PS-G000-T0003 *Engineering Specification for Packaging, Handling, and Storage Requirements*, and ASME AG-1a, Article HA-7000, (Level C).

7.1.2 The activated carbon media shall be packaged/prepared for shipment, handled, and stored in accordance with Buyer specification 24590-WTP-3PS-G000-T0003 *Engineering Specification for Packaging, Handling and Storage Requirements*, ASME AG-1, Article FE-7000 and FF-7000, (Level B).

7.1.3 The Activated Carbon Bed Adsorber units, activated carbon media, and shims shall not be packaged for shipping until all shop tests and inspections have been performed and the Buyer's Representative reviews the results.

7.2 Cleanliness

7.2.1 Cleanliness shall be per the applicable documents in Paragraphs 7.1.1 and 7.1.2 of this specification.

7.2.2 Solvents and cleaning solutions used on stainless steel shall have a halogen content of less than 200 ppm.

7.3 Tagging

7.3.1 Tagging of the Activated Carbon Bed Adsorber units shall be as specified in ASME AG-1, Article FE-9000 and ASME AG-1a, Article HA-9000. Tagged information shall also include associated plant item number specified in the data sheets that are in Section 2 of the MR.

7.3.2 A stainless steel nameplate shall be rigidly attached to the Activated Carbon Bed Adsorber units in a prominent position for ease of visibility and include:

- manufacturer's name
- shop location
- date of manufacture
- serial number
- equipment ratings (pressure, flow, temperature)
- plant item number
- weight of assembly
- purchase order number

7.3.3 Nameplates shall be visible after the insulation is installed, or a duplicate nameplate shall be provided on the top of the insulation. Nameplate shall be located for easy access and reading.

7.3.4 All field testing materials and filters shall be tagged as required for field testing.

7.4 Documentation

7.4.1 Seller shall ensure that appropriate documentation is prepared and, if required, signed by the appropriate person(s). The shipping documentation shall accurately reflect specific traceability to the items being shipped.

7.4.2 Seller shall ensure that appropriate documentation is prepared for the Activated Carbon Bed Adsorber units, activated carbon, and shims. At a minimum, documentation shall include the following information, as applicable:

- Manufacturer name, model number, and serial number
- Plant Item Number

7.5 Shipment Preparation Instructions

7.5.1 Shipment of items shall be conducted in accordance with ASME AG-1a, Article HA-7300, Buyer specification 24590-WTP-3PS-G000-T0003 *Engineering Specification for Packaging, Handling, and Storage Requirements*.

7.5.2 The Activated Carbon Bed Adsorber units shall be shipped completely assembled except for activated carbon. Activated carbon shall be shipped separately.

7.5.3 Weatherproof shipping lists (two per packaged item) shall be prepared and submitted, and shall clearly identify the contents of each package sent to the Buyer. All submittals and shipping boxes shall be identified with the Buyer's purchase order number.

7.5.4 Seller shall provide a complete identification and location of temporary material contained within the equipment for shipment, handling, or storage that must be removed prior to commissioning (e.g., shipping blocks, desiccant bags, components shipped inside larger sections, etc.). In addition, the Seller shall provide instructions for removal of temporary materials, as required.

7.5.5 The Activated Carbon Bed Adsorber units and shims shall be mounted on skids, in crates, or in boxes as suited for the intended method of transport. Lifting weight and center of gravity shall be clearly marked on both the equipment and its shipping documents.

8 Quality Assurance

8.1 General Requirements

8.1.1 The Seller's QAP Requirements are included in Buyer specification 24590-WTP-3PS-G000-T0001, *General Specification for Supplier Quality Assurance Program Requirements*.

8.1.2 Seller's QAP Manual shall be submitted to Buyer for review in accordance with Buyer specification 24590-WTP-3PS-G000-T0001, *General Specification for Supplier Quality Assurance Program Requirements.*

8.1.3 Seller's QAP, as a minimum, shall contain the requirements detailed in the Supplier Quality Assurance Program Requirements Data Sheets listed in Section 2 of the MR.

8.2 Quality (Q) Related Components

8.2.1 Seller shall have in place a QAP meeting the requirements of ASME-NQA-1, marked as applicable in Supplier Quality Assurance Program Requirements Data Sheet attached to the MR, and Buyer specification 24590-WTP-3PS-G000-T0001, *General Specification for Supplier Quality Assurance Program Requirements.*

8.2.2 The successful bidder must pass a pre-award survey by the Buyer. Seller shall demonstrate that its quality program is in compliance with the procurement quality requirements listed in the Supplier Quality Assurance Program Requirements Data Sheet. The Seller shall allow the Buyer, its agent, and DOE access to their facility and records pertaining to this purchase order for the purpose of Quality Assurance (QA) Audits and Surveillance at mutually agreed times.

8.2.3 All items shall be manufactured in accordance with the Seller's QAP that meets the requirements of ASME NQA-1, and has been previously evaluated and accepted by the WTP Quality Organization.

8.2.4 Seller shall submit their QAP and work plan to Buyer for review prior to commencement of work. The plan shall include documents and procedures to implement the work and include a matrix of essential QA elements cross referenced with the documents/procedures.

8.3 Supplier Deviation

8.3.1 Each Supplier shall be required to identify and promptly document all deviations from the requirements of the procuring documents. In addition, the supplier shall be required to described the recommended disposition based on appropriate analysis. Submittals of request for deviations from lower-tier suppliers shall be through the prime supplier to RPP-WTP.

Supplier-proposed deviations from procurement documents shall be initiated by use of Supplier Deviation Disposition Request (SDDR) form in section 2 of the MR.

9 Configuration Management

Equipment and or components covered by this specification are identified with Plant Item numbers shown in the MDSs. Each item shall be identified in accordance with Tagging in section 7 of this specification.

10 Documentation and Submittals

10.1 General

10.1.1 Seller shall submit to Buyer all detailed designs, documentation, procedures, instructions, calculations, analyses, laboratory results, models, manufacturer data, inspection reports, test reports, certifications, certificates, manuals, MSDSs, video tapes, and drawings required per this specification, the applicable codes, standards, and reference documents in section 2 of this specification, and the MR.

10.1.2 All detailed designs, drawings, shop drawings, supporting calculations, supporting analyses, support models, procedures, instructions, manufacturer data, operation manuals, and maintenance manuals shall be issued to the Buyer for review prior to manufacture of the Activated Carbon Bed Adsorber units, special tools, and/or the purchase of special tools, filters, and gaskets.

10.1.3 Seller shall submit storage requirements and instructions for Buyer's review.

10.1.4 Seller shall submit to Buyer Engineering and Quality Verification documents in the forms and quantities shown in Form G-321-E, Engineering Document Requirement, and Form G-321-V, Quality Verification Document Requirements attached to the MR.

10.1.5 Seller shall submit a report identifying any deviations and/or conflicts per Section 2 of the MR to the Buyer for review.

10.1.6 Each documentation transmittal package shall have a documentation inventory sheet attached listing all documents and the number of pages each.

10.1.7 MDSs in Section 2 of the MR and motor data sheets shall be marked-up by the Seller and submitted to the Buyer for review with the detailed design. Seller shall fill in all information that is marked as TBD and mark-up actual overall Activated Carbon Bed Adsorber dimensions based on the detailed design.

10.1.8 Seller shall provide all operation manuals, maintenance manuals, initial setup and startup instructions, special tools, and spare parts lists for Activated Carbon Bed Adsorber components, as applicable.

10.1.9 Provide nominal and maximum inlet and outlet nozzle loadings, deflections, and moments in all directions for Activated Carbon Bed Adsorber units per thermal and seismic analysis results.

10.1.10 Provide Activated Carbon Bed Adsorber unit support and anchorage design load analyses including seismic, thermal, and combination loads.

10.1.11 Provide MSDS for Seller's recommended challenge gas.

10.1.12 The Seller shall provide equipment reliability figures for all major components and sub-components of the Carbon Bed Adsorber system. The definition of components and sub-components is at the vendor's discretion. The reliability figures shall include, as a minimum, the following:

- Failure rate, or mean time between failure (whichever is available)
- Estimated modes of failure (example, Drive gear failure, motor burnout, brake failure, etc.). This may be delineated in a FMEA. The method used to perform the FMEA (example, MIL-STD-1629) and the year shall be specified. In addition, all assumptions used to perform the FMEA shall be stated.
- Recommended maintenance and frequency, as applicable
- Estimated time to perform the recommended maintenance, as applicable

The data above shall be based on the physical and environmental conditions delineated in this specification. Where possible, the seller shall compare the figures for the equipment in this specification to similar equipment sold and serviced by the vendor. The source for all estimates and any underlying assumptions shall be stated. If software is used to perform the FMEA, the seller shall specify the software used and the version (example software, Relex, Isogen, Reliasoft, etc.)

10.1.13 Provide installation manual per the requirements of engineering specification 24590-WTP-3PS-G000-T0003, *Packaging, Handling, and Storage Requirements*.

10.1.14 Provide site handling and storage instructions per the requirements of section 3.9 and engineering specification 24590-WTP-3PS-G000-T0003, *Packaging, Handling, and Storage Requirements*.

10.2 Drawings

10.2.1 Seller shall provide all drawings required per this specification and the applicable documents in section 2 of this specification.

10.2.2 All drawings shall be produced per the drawing practices set forth in ASME Y14.100, Engineering Drawing Practices.

10.2.3 Seller shall submit drawings and diagrams for Buyer's review prior to fabrication, and/or purchase of appurtenance equipment. Drawing and diagram submittals shall include as a minimum, but not limited to, the following:

- Outline drawings showing dimensions, services, insulation, and foundation and mounting details.

- Outline drawing showing electrical and instrumentation tie-in points.
- Outline drawing showing locations of piping connections with nozzle schedule, including sizes of piping connections with nominal and maximum nozzle loadings, deflections, and moments in all directions.
- Insulation detail drawing(s) mapping installation
- Overall piping and instrumentation diagram (P&ID) for the Activated Carbon Bed Adsorber Units using Buyer's symbols and legends shown in Buyer drawings 24590-WTP-M6-50-00001 through 24590-WTP-M6-50-00005.
- Interconnection diagram showing details of all internal connections and Buyer external connections, including required location and sizes of wiring connections (including other connections to Buyer's control system).
- Overall single line diagram (wiring diagram) showing all electrical equipment and wiring in the Activated Carbon Bed Adsorber Unit.
- Control logic diagrams showing input signal paths required to accomplish a response.
- Assembly drawings with sufficient information and detail to facilitate assembly of the component parts of an equipment item.
- Shop detail drawings that provide information and detail to facilitate fabrication, manufacture, or installation.

10.3 30% Design Review

10.3.1 Seller shall conduct a 30 % design review with the Buyer. Seller shall submit all drawings, procedures, calculations, laboratory testing results, analyses, and information necessary to conduct the 30 % design review to the Buyer for review.

10.3.2 Finalized outline dimensions of the Activated Carbon Bed Adsorber units shall be included in the 30 % design review. Finalized dimensions shall, at a minimum, include the following:

- Overall dimensions and size for Activated Carbon Bed Adsorber units
- P&IDs
- Control logic diagrams
- Activated Carbon Bed Adsorber unit inlet and outlet nozzle locations
- Discharge filter location and size
- Testing port and manifold locations and size
- Adsorber cell overall dimensions
- Mounting details (anchor size, location, layout, etc.)
- Preliminary bag-in/bag-out plan
- Fire water inlet and drain locations and sizes

10.4 90 % Design Review

Seller shall conduct a 90 % design review with the Buyer. Seller shall submit all drawings, procedures, calculations, analyses, and information necessary to conduct the 90 % design review to the Buyer for review.

10.5 Calculations

All calculations to be provided shall be orderly, complete, and sufficiently clear to permit verification. The body of the calculations shall include:

- A concise statement of the purpose of the calculation
- Input data, applicable criteria, and stated assumptions
- A list of references used, including drawings, codes, standards, and computer programs (indicate the version or issue date)
- A discussion of rationale used for design assumption basis
- Equations used for all computations
- Numerical calculations including identification of units used
- A concise statement addressing the calculation results and/or recommendations
- A table of contents for complex calculations

10.6 Schedules

10.6.1 A detailed schedule of laboratory testing, engineering, document submittals, material purchases, fabrication, shop tests, and shipment shall be submitted.

10.6.2 All procedures and instructions shall be completed and submitted to the Buyer a minimum of eight (8) weeks prior to Activated Carbon Bed Adsorber shipment.

Figure 1 - Activated Carbon Bed Adsorber Schematic

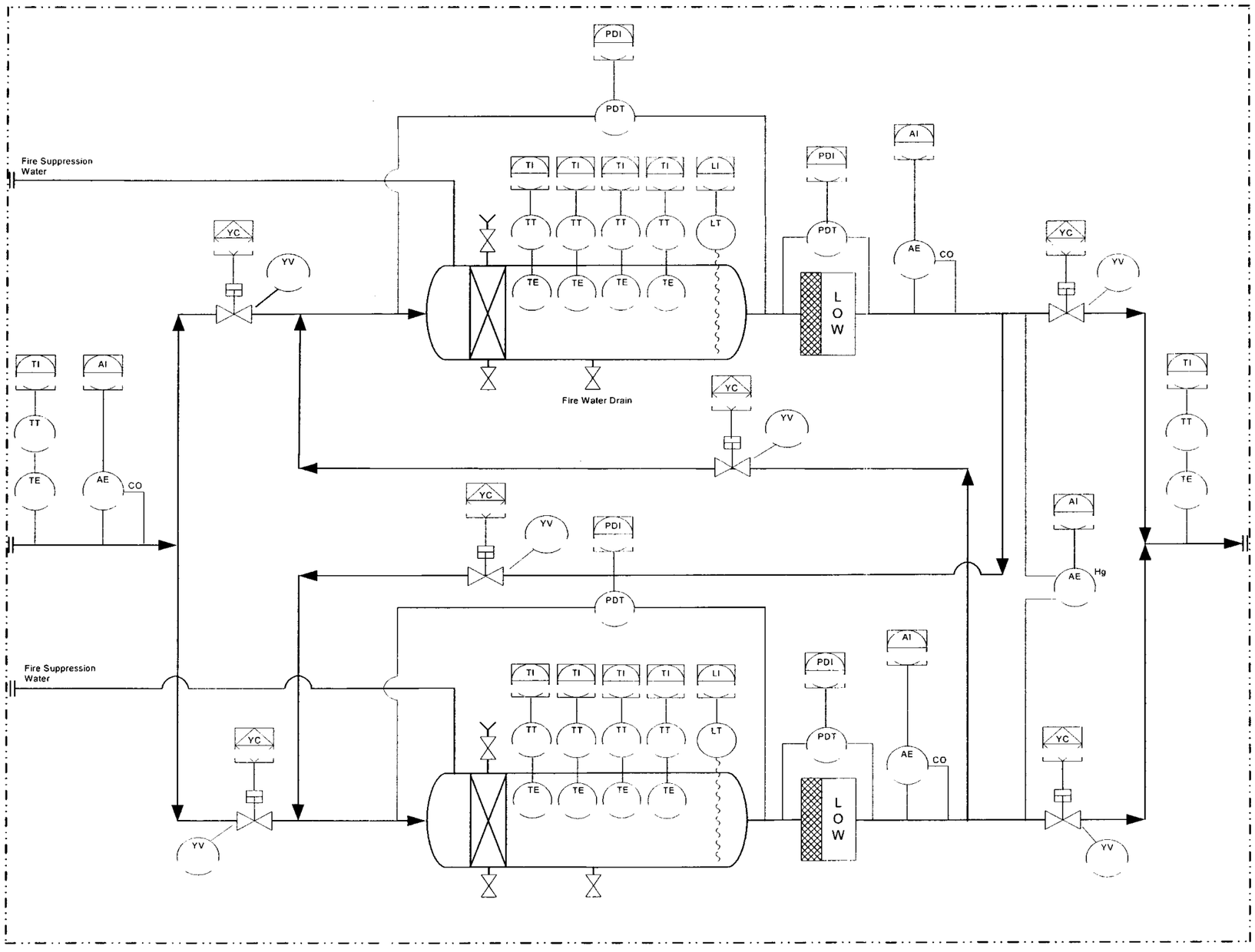

Notes:

1. This figure is only intended to give a pictorial view of the offgas flow through the Activated Carbon Bed Adsorbers. Only the major components are shown. Refer to the specification for all components to be included.
2. One carbon bed is shown per vessel for clarity reasons only.
3. Pneumatic loading system is not shown for clarity.
4. Manually select Activated Carbon Bed Adsorber to be monitored.
5. Instrument air tubing is not shown. Instrument air shall be supplied on a common header, piped to equipment edge and flanged.
6. Seller shall supply a single electrical feed required for each Activated Carbon Bed Adsorber.
7. Seller shall supply a single instrumentation interface point for both Activated Carbon Bed Adsorbers.
8. Required PSV and vent lines for fire suppression system are not shown. System shall be per Seller's design.
9. Mercury analyzer is shown for clarity but is not included the Seller's scope of supply.

Legend:

- Control Room Transmitter – Continuous Software (Operator Accessible)
- Control Room Transmitter - Discrete Software (Operator Accessible)
- Hardware – Field Mounted (Operator Accessible)
- Actuated Butterfly Valve
- Manual Valve
- Flange Connection
- Fill Chute
- Radar or Sonic Signal (Not Guided)

Appendix A – Mandatory Test Requirements for HLW/LAW Carbon Bed Adsorbers

1.0 Purpose

The purpose of this test specification is to determine if sufficient amounts of ammonia nitrate can form in the offgas pipline, in the guard bed, and in the activated carbon bed adsorber media to increase the propagation rate of a bed fire.

2.0 Overview

The potential for ammonia and nitrous oxidies to form ammonium nitrate within the carbon bed adsorber media is unknown. A significant accumulation of ammonium nitrate within the bed media has been raised as a fire safety concern. It is postulated that ammonium nitrate may increase the rate a bed fire propagates, potentially modifying the current bed-fire mitigation strategy.

3.0 Objectives

1. Test 1 - Determine formation of NH_4NO_3 in the proposed activated carbon adsorber media(s) configuration if the inlet gas contains NO_X and NH_3.
2. Test 2 - Assess the hazards associated with NH_4NO_3 adsorbed in the proposed activated carbon adsorber media(s), (i.e. fire propagation).

4.0 Quality Assurance

Tests shall be performed in accordance with the applicable sections of NQA-1. The Test Plan will include a matrix cross-referencing the QA requirements to implementing procedures for the work, and justifying elements that are not applicable.

5.0 Test Conditions

Each of the tests in the following sections have been formulated to address the test objectives from Section 3.

The activated carbon beds proposed for the HLW and LAW off gas systems will operate under the conditions defined in mechanical data sheets. The appropriate media for each test will be selected and described in the Vendor Test Plan. The Test Plan will detail the test conditions and data collection for each test based on the media and operating conditions.

Testing will be done with a bench scale apparatus using air and water for humidity as the bulk gas.

5.1 Test 1 - Determine NH_4NO_3 formation in the proposed activated carbon adsorption system(s).

a. Test conditions
- Sorbent - By vendor
- Bed residence time – By vendor
- Superficial gas velocity – by vendor
- Temperature – 50 °C (bounding case in exception with mechanical data sheets)
- Relative humidity – 50 % (bounding case in exception with mechanical data sheets)
- Gas composition:
  a. Bulk gas – Air
     i. Total offgas flowrate is 5700 ft3/min (21500 lb/hr)
  b. Other constituents –
     i. Inlet NH3 concentration - 0.093 lb/hr
     ii. Inlet CO concentration - 3.9 lb/hr
     iii. Inlet NO concentration - 81 lb/hr
     iv. Inlet NO2 concentration - 130 lb/hr
- Inlet gas HEPA filtered to remove particulate ammonium nitrate formed prior to the carbon bed with a 99.99995% removal efficiency.
- Eight (8) seconds gas residence time to simulate ammonium nitrate formation, prior to HEPA filtration.

b. Test duration
- By vendor

c. Data to be obtained
- Inlet and outlet NO_2, NH_3 concentrations.
- Quantity of NH_4NO_3 - accumulated in bed media at the end of test.

5.2 Test 2 - Perform standard calorimeter test (i.e., ASTM E 1623-04 or equivalent) to measure exotherm of new bed media compared to bed media containing two years of accumulated ammonium nitrate.

5.3 Test 3 - If a substantial quantity of ammonium nitrate or a substantial exotherm is determined, re-run Test 1 and Test 2 with the addition of offgas pre-heat to 70 °C just prior to HEPA filtration.

6.0 Success Criteria

1. Quantization of ammonium nitrate formed in-situ on bed media, extrapolated to a two-year bed life.
2. Calorimeter test data of new bed media compared to bed media containing ammonium nitrate accumulated in two-years of bed life.

7.0 Optional Testing to Substantiate Warranty

7.1 Test 1 - Measure mercury and organic (allyl alcohol, and naphthalene) removal efficiencies, mercury profile through the adsorbent bed, and organic removal using a simulated HLW offgas that also includes acetonitrile and acrylonitrile.

a. Test conditions
   - Sorbent - by vendor
   - Residence time – by vendor
   - Superficial gas velocity – by vendor
   - Temperature – 105 °C
   - Mercury concentration – 42,000 µg/dscm
   - Relative humidity – 35 %
   - Gas composition:
     a. Bulk gas – Air
     b. Concentrations of organics addition consisting of acetonitrile, acrylonitrile, allyl alcohol, and naphthalene are TBD pending testing planned for a WTP pilot facility.
     c. Other constituents – 0.4% CO_2, 50 ppm CO, 1,000 ppm NOx (NO_2/NO = 1), and 1.8 ppm HF.

b. Test duration
   - 200 hours or until breakthrough.

c. Data to be obtained
   - Measure inlet and outlet mercury concentrations.
   - Measure Hg profile in S-AC bed at end of test.
   - Measure inlet and outlet organic concentrations.

d. Calculations
   - Hg removal efficiency and loading..
   - Estimated time for S-AC bed breakthrough of Hg.
   - Organic removal efficiency (allyl alcohol and naphthalene).

7.2 Test 2 - Measure mercury, hydrogen fluoride, hydrogen chloride, and iodine removal efficiencies through the adsorbent beds, extent of iodine migration through the adsorbent bed, and organic removal (allyl alcohol, and naphthalene) using a simulated LAW offgas that also includes acetonitrile and acrylonitrile using a simulated LAW offgas.

a. Test conditions
   - Sorbents – by vendor
   - Residence time – by vendor
   - Superficial gas velocity – by vendor
   - Gas composition:
     a. Bulk gas – Air
        i. Total offgas flowrate - 5700 ft3/min (21500 lb/hr)
   - Temperature – 93 °C
   - Inlet mercury concentration - 0.49 lb/hr
     a. Removal efficiency - 99.8%.
     b. Elemental mercury 85wt% Hg^0
     c. Oxidized mercury 15wt% Hg^{+2}
   - Inlet hydrogen chloride concentration - 0.47 lb/hr.
     a. Removal efficiency - 97%.
   - Inlet hydrogen fluoride concentration - 0.73 lb/hr.
     a. Removal efficiency - 97%.
   - Inlet iodine concentration - 0.00247 lb/hr
     a. Removal efficiency - 99%.

- Relative humidity – 33 %
- Gas composition:
    a. Bulk gas – Air
    b. Concentrations of organics addition consisting of acetonitrile, acrylonitrile, allyl alcohol, and naphthalene are TBD pending testing planned for a WTP pilot facility.
    c. Other constituents
        i. Inlet CO concentration - 3.9 lb/hr
        ii. Inlet NO concentration - 81 lb/hr
        iii. Inlet NO2 concentration - 130 lb/hr
    d. Test duration
- 200 hours or until breakthrough

b. Data to be obtained
- Measure inlet and outlet mercury concentrations.
- Measure Hg profile in S-AC bed at end of test.
- Measure inlet and outlet HF concentrations.
- Measure inlet and outlet HCl concentrations
- Measure inlet and outlet iodine concentrations.
- Measure inlet and outlet organic concentrations.

c. Calculations
- Hg removal efficiency.
- Estimated time for sorbent bed breakthrough of Hg.
- Iodine removal efficiency.
- Estimated time for sorbent bed breakthrough of iodine.
- HF removal efficiency.
- Estimated time for sorbent bed breakthrough of HF.
- HCl removal efficiency.
- Estimated time for sorbent bed breakthrough of HCl.
- Organic removal efficiency (allyl alcohol and naphthalene).

8.0 Reporting

A test plan and supporting documentation (operating procedures, materials and testing equipment control lists, analytical procedures) must provide a full record of the testing requirements, testing equipment configuration, operating conditions, assumptions, and any other relevant information. In addition to, or consistent with, the test plan content required by the Quality Assurance Project Plan for RPP-WTP, current revision, the test plan should include directly or by reference (as appropriate) the following information:

- **Document Number** – Test plan number in the document header.
- **Document Hierarchy** – Statement in the test plan text referencing the governing test specification.
- **Background** – Summary level discussion of past results and current data needs that provide context and relevancy of the testing to the WTP Project.
- **Test Prerequisites** – Definition and/or reference of laboratory testing, engineering analyses, small-scale testing needed to support testing.

- **Test Conditions** – Test variables and operating conditions (e.g., duration of operations at steady state conditions, range of equipment operating conditions, process flows, pressures, temperatures, differential pressures, etc.) identified in tables or other efficient formats.
- **Sample Data Requirements** – A table listing the sample type, location, frequency, number of replicates, and planned analyses to be performed. Minimum data accuracy requirements should be addressed.
- **Test Modifications** – Test Plan shall contain a statement defining how changes or modifications in operations or testing will be documented in the "desk copy" or similar controlling documentation during the test and who has the authority to authorize changes or modifications depending on the significance of the change.
- **Equipment Configuration Record** – The equipment configuration for the test or document reference where the configuration can be found. Statement defining where any changes or modifications to the baseline equipment will be recorded, e.g., laboratory record book.
- **M&TE** – A list identifying measuring and test equipment (M&TE) used to collect data to meet Test Specification requirements, data reported to the project in the summary report or other data reporting formats, and M&TE relied upon for control or modeling purposes. Accuracy and sensitivity achievable for each instrument.
- **Supporting Procedures** – A list of applicable technical and operating procedures or a referenced document that contains the list of documents required for operating the test equipment and associated support systems, sample preparation and analytical procedures, etc.
- **Unique Sample Identification** – Description of or document reference defining method to label, store and maintain samples.
- **Reporting and Analyses Requirements** – Process data that will be obtained and reported, Rate versus time, average temperature versus time, and analyses are required to satisfy each test objective. Planned data analyses, e.g., comparison to theoretical or published predictions, empirical fitting, etc., required to meet objectives.
- **Personnel Qualification** – List of any special training needs.
- **Quality Assurance** – Statement identifying applicable quality assurance requirements. Any exceptions to the approved quality assurance plan should be described.

A final report will be submitted within 60 days of completing testing and sample analyses. Test report content shall include (compatible with the individual test objectives):

- Approval sheet signed by the principal investigator, data validation peer reviewer, and project manager,
- Summarize the tests performed, including the date of the tests, and applicable test specification and test plan,
- Provide a clear description of the purpose of the test and state how the completed test met that purpose,
- Describe the unit operations in which the tests were performed and contrast test conditions with planned operating conditions of the RPP-WTP, as appropriate,
- Present and discuss test results and compare against the "success" criteria. Discuss whether or not the findings of the test performed are consistent with previous test reports, whether the expected WTP design or operational conditions are appropriate for the system, or have implications for safety, permitting, or operability,
- Data collected and its acceptability,

- Actions taken in connection with any nonconformances noted,
- Identification of the measuring and test equipment used during the test,
- Describe deviations from the approved test plan, or expected configuration conditions, that occurred during the conduct of the test,
- Comprehensive list of all samples providing the date/time of sampling, sample type, and sample label,
- Data tables listing monitored parameter values.
- A discussion of how the test results validate equipment sizing and performance.

R10636426

RIVER PROTECTION PROJECT – WASTE TREATMENT PLANT

ENGINEERING SPECIFICATION

FOR

Process Bulge Design and Fabrication

This bound document contains a total of 45 pages.

Content applicable to ALARA? ☒ Yes ☐ No

ADR No.	**Rev**	ISSUED BY RPP-WTP PDC	**Quality Designator**
N/A	N/A		QL
			DOE Contract No. DE-AC27-01RV14136

NOTE: Contents of this document are Dangerous Waste Permit affecting.

REV	DATE	BY	CHECK	REVIEW	E&NS	QA	DPEM
2	10/24/05	J. Jackson	C. Morley	D. Pfluger	N/A	N/A	M. Hoffmann
1	4/3/03	J. Jackson	C. Morley	D. Pfluger	N/A	N/A	M. Hoffmann
0	9/17/02	J. Jackson	C. Morley	N/A	N/A	N/A	S. Kirk

SPECIFICATION No. 24590-WTP-3PS-MX00-TP001 **Rev** 2

Revision History

Revision	Reason for Revision
0	Issued for Permitting Use
1	Issued for Permitting Use
2	Issued for Permitting Use

Notice

Please note that source, special nuclear, and byproduct materials, as defined in the Atomic Energy Act of 1954 (AEA), are regulated at the US Department of Energy (DOE) facilities exclusively by DOE acting pursuant to its AEA authority. DOE asserts, that pursuant to the AEA, it has sole and exclusive responsibility and authority to regulate source, special nuclear, and byproduct materials at DOE-owned nuclear facilities. Information contained herein on radionuclides is provided for process description purposes only.

Contents

Notice iii

1 Scope 1

1.1 Project Description and Location 1

1.2 Equipment, Material, and Services Required 1

1.3 Work by Others 2

1.4 Acronyms 2

1.5 Definitions 3

1.6 Safety/Quality Classifications 5

2 Applicable Documents 6

2.1 General 6

2.2 Codes 6

2.3 Industry Standards 6

2.4 Engineering Standards 7

2.5 Reference Documents/Drawings 7

3 Design Requirements 8

3.1 Basic Function 8

3.2 Performance 12

3.3 Design Conditions 12

3.4 Environmental Conditions 12

3.5 Mechanical Requirements 13

3.6 Loadings 20

3.7 Accessibility and Maintenance 21

4 Materials 22

4.1 Positive Material Identification 22

4.2 Construction 22

4.3 Prohibited Materials 23

4.4 Special Requirements 23

4.5 Storage of Special Materials (e.g., stainless steel) prior to work 23

5 Fabrication 24

5.1 General Requirements 24

5.2 Assembly 24

5.3 Tolerances 24

6 Tests and Inspections 25

6.1 Non-Destructive Examinations 25

6.2 Personnel Qualifications 26
6.3 Shop Tests 26
6.4 Control of Measurement and Test Equipment 29
6.5 Inspection and Test Status 29
6.6 Control of Nonconforming Items 29
7 Preparation for Shipment 30
7.1 General Requirements 30
7.2 Cleanliness 30
7.3 Painting 30
7.4 Tagging 30
7.5 Packaging 30
7.6 Documentation 31
7.7 Shipping Instructions 31
8 Quality Assurance 31
8.1 General Requirements 31
8.2 Quality (Q) Related Components 32
9 Configuration Management 32
10 Documentation and Submittals 32
10.1 General 32
10.2 30% Design Review 33
10.3 60% Design Review 34
10.4 90% Design Review 34
10.5 Final Design Review 34
10.6 Drawings 34
10.7 Calculations 35
10.8 Schedules 35
11 References 35
11.1 Incorporated Design Changes 35
11.2 Design Changes Incorporated by Reference 35

Appendices

Appendix A 38
Appendix B 39

Tables

Table 1 Process Pipe and Sleeve Pipe Sizes....37
Table 2 Design Nozzle Load....37

Figures

Figure 1 Typical Representation of Process Pipework and Sleeve Pipes Penetrating the Cell Wall....36
Figure 2 Typical Representation of Process Pipework and Floor Penetrations....36

1 Scope

1.1 Project Description and Location

1.1.1 The River Protection Project-Waste Treatment and Immobilization Plant (RPP-WTP) is a complex of waste treatment facilities where the U.S. Department of Energy Hanford Site tank waste will be put into stable glass form. The Waste Treatment and Immobilization Plant Contractor will design, build and start-up the RPP-WTP pretreatment and vitrification facilities for the DOE Office of River Protection. The waste treatment facilities will pretreat and immobilize the low- activity waste and high-level waste currently stored in underground storage tanks at the Hanford Site.

The Hanford Site occupies an area of about 560 square miles and is located along the Columbia River, north of the city of Richland, Washington. The RPP-WTP Facility will be constructed at the east-end of the 200 East Area of the Hanford Site. The Counties of Benton, Franklin, and Grant surround the Hanford Site.

1.2 Equipment, Material, and Services Required

1.2.1 This specification establishes the requirements for the design, fabrication, project management, quality assurance, inspection, and testing of Process Bulges for use in the RPP-WTP Facilities.

1.2.2 The Seller shall provide fully detailed designs and all labor, materials, equipment, and services necessary to manufacture the Process Bulges in accordance with this specification and Process Bulge Data Sheet. Any discrepancies between this specification, referenced specifications, and the Process Bulge Data Sheet shall be brought to the attention of the Buyer for resolution.

1.2.3 The scope of work includes, but is not limited to:

- Detail design of all pipework, confinement, support, maintenance platforms, column davits, and shielding systems as required.
- Fabrication and/or assembly of all items and components.
- Performance testing of equipment to verify and demonstrate functionality and conformance to the design and technical requirements described in this document.
- Leak/pressure testing of all process systems to demonstrate primary and secondary confinement.
- Documentation of testing procedures, testing results, operation and maintenance procedures, and quality assurance procedures.

- Design document review in progressively complete package form. Delivery shall include 30%, 60%, 90%, and final design reviews.

- Preparation for shipping and packaging of all equipment.

1.2.4 The Seller shall also provide all special tools and/or equipment necessary for operation and maintenance of the Process Bulges and their components. The Seller shall prepare drawings of special tools and/or equipment and submit them to the Buyer for review. Special tools shall not include small hand tools available in the commercial market.

1.2.5 Specific activities excluded from the scope of this specification include:

- On site unloading
- Installation
- Commissioning

1.2.6 The Seller shall not be responsible for the supply of process pumps, the Buyer shall issue this equipment to the Seller as contractor furnished equipment for incorporation into the fabrication. Refer to the MR for the scope of procurement responsibilities for valves, actuators, and instrumentation.

1.3 Work by Others

1.3.1 The Seller may subcontract any portion of the work, provided the quality assurance requirements of this specification are maintained, and provided the Buyer approves the subcontractor and the scope of work.

1.3.2 The Seller will be ultimately responsible for the completeness and quality of all work covered in this specification.

1.4 Acronyms

AISC	American Institute of Steel Construction
ANSI	American National Standards Institute
AP	Air Permit
APC	Additional Protection Class
ASME	American Society of Mechanical Engineers
ASTM	American Society for Testing and Materials
CM	Commercial Material
DBE	Design Basis Earthquake
DOE	U.S. Department of Energy
EQDS	Environmental Qualification Data Sheet
ITS	Important to Safety
M&TE	Measurement and Test Equipment
MR	Material Requisition
MSDS	Material Safety Data Sheet
NRTL	Nationally Recognized Testing Laboratory
NQA	National Quality Assurance

OSHA	Occupational Safety & Health Administration
P&ID	Piping and Instrumentation Diagram
PCB	Polychlorinated Biphenyl
PMI	Positive Material identification
PO	Purchase Order
PT	Liquid Penetrant Test
QA	Quality Assurance
QAM	Quality Assurance Manual
QARD	Quality Assurance Requirements and Description
QL	Quality Level
RFQ	Request for Quote
RPP-WTP	River Protection Project-Waste Treatment Plant
RRC	Risk Reduction Class
SC	Safety Class
SC	Seismic Category
SDC	Safety Design Class
SDS	Safety Design Significant
SRD	Safety Requirements Document
SS	Safety Significant
SWL	Safe Working Load
UBC	Uniform Building Code
UL	Underwriters Laboratories, Inc.
UNC	Unified National Coarse
VT	Visual Test
WAC	Washington Administrative Code

1.5 Definitions

Buyer: Bechtel National Inc. for the RPP-WTP.

Seller: Manufacturer, assembler, fabricator, vendor, supplier, or equal who provides equipment, systems, components, services, or other products for delivery or direct benefit to the Buyer.

Buyer's Representative(s): The Buyer's designee(s), who shall witness onsite operations at the seller and sub-seller sites and perform onsite inspections and surveillance.

HEPA Filter: A high efficiency particulate air filter having a fibrous medium with a particle removal efficiency of 99.97% when tested with essentially mono-dispersed 0.3 μm test aerosol particles.

Important to Safety (ITS): Systems, structures, and components (SSCs) that serve to provide reasonable assurance that the facility can be operated without undue risk to the health and safety of the workers and the public. ITS encompasses the broad class of facility features addressed (not necessarily explicitly) in the top-level radiological, nuclear, and process safety standards and principles that contribute to the safe operation and protection of workers and the public during all phases and aspects of facility operations (i.e., normal operation as well as accident mitigation). ITS includes SSCs designed as Safety Design Class (SDC)/ *Safety Class (SC)*, Safety Design Significant

(SDS)/ *Safety Significant (SS)*, and Risk Reduction Class (RRC)/*Additional Protection Class (APC)*.

Paragraph: When a paragraph of this specification, referenced document, referenced codes, or referenced standards is referenced in this specification, the paragraph referenced and all subparagraphs and sub-subparagraphs of the paragraph shall be considered inclusive.

Quality Level (QL): The quality level identifies the quality requirements to be applied to items and activities. The identified quality levels are QL-1, QL-2, QL-3, AP, and CM.

Quality Level 1 (QL-1): QL-1 items and activities shall meet the applicable requirements of NQA-1 (1989).

Quality Level 2 (QL-2): QL-2 items and activities shall meet the applicable requirements of NQA-1 (1989). The distinction between QL-1 and QL-2 is provided to identify that a higher degree of risk is associated with QL-1 items and activities.

Quality Level 3 (QL-3): QL-3 items and activities shall meet the applicable requirements of NQA-1 (1989) and those additional requirements of QARD and QAM.

Air Permit (AP): Except for those items identified as QL-1/QL-2, AP shall be applied to radioactive air emission control components identified in the air permit and the Radioactive Air Emission Control Technology Standards Compliance Matrices unless otherwise approved by the Washington State Department of Health. AP items and activities shall meet the applicable requirements of NQA-1 (1989). The distinction between QL-1/QL-2 and AP is provided to identify that a higher degree of risk is associated with QL-1/QL-2 items and activities.

Commercial Material (CM): Those permanent plant SSCs not identified as either QL-1, QL-2, QL-3, or AP are CM (which includes both RRC/APC and Non-ITS).

Risk Reduction Class (RRC) - Initial Safety Classification: RRC Systems, Structures, and Components are Important to Safety Systems, Structures, and Components that are neither Safety Design Class nor Safety Design Significant.

Additional Protection Class (APC) - Replacement Safety Classification: Systems, Structures, and Components are Important to Safety Systems, Structures, and Components that are neither Safety Class (SC) nor Safety Significant (SS).

Safety Design Class (SDC) - Initial Safety Classification: an SSC whose safety function is to prevent a worker or maximally exposed member of the public from receiving a radiological or chemical exposure that exceeds the exposure standards defined in the Safety Requirements Document (SRD) , or that is credited for the prevention of a critically event.

Safety Class (SC) - Replacement Safety classification: an SSC, including portions of process systems whose preventive or mitigative function is necessary to limit radioactive material exposure to the public, as determined from safety analyses.

Safety Design Significant (SDS) - Initial Safety Classification: an SSC that is required to ensure that exposure standards for normal operation are not exceeded; whose failure would directly prevent a SDC SSC from performing its safety function; or that implements the defense-in-depth requirements of the SRD Appendix B, section 3.0, Table 1.

Safety Significant (SS) - Replacement Safety Classification: an SSC that is not designated as SC, but whose preventive or mitigate function is a major contributor to defense-in-depth and/or worker safety as determined by safety analyses.

Seismic Category (SC): RPP-WTP seismic classifications for SSCs based on their safety function. Seismic Categories are I (SC-I), II (SC-II), III (SC-III), IV (SC-IV), and V (SC-V).

Seismic Category I (SC-I): ITS equipment/tanks which have a safety function. For the design of SC-I components, no credit for inelastic energy absorption is allowed. SC-I equipment/tanks shall be functional during and after a DBE.

Seismic Category II (SC-II): ITS equipment/tanks whose failure during a seismic event could prevent a SC-I SSC from performing its seismic safety function. For the design of SC-II equipment/tanks, credit for inelastic energy absorption is allowed. SC-II components shall maintain control and confinement of hazardous materials during and after a DBE, but do not need to be functional.

Seismic Category III (SC-III): (a) ITS SSC, but without SC-I or SC-II safety function, but with a chemical hazard. (b) Non-ITS SSC which has an inventory of radioactive or hazardous material in an amount less than ITS significant quantity.

Seismic Category IV (SC-IV): Non-ITS SSC without an inventory of radioactive or hazardous material, but must meet UBC 1997 loadings.

Seismic Category V (SC-V): Non-ITS SSC not requiring seismic design.

Risk: the product of probability and consequences of any event considered. These factors are, to the extent possible, assigned numeric values so that results of risk evaluations can be ordered using appropriate descriptions.

Safety Classification: categorized as SDC/SC, SDS/SS, or RRC/APC.

1.6 Safety/Quality Classifications.

The Quality Level (QL) and Seismic Category (SC) of the Process Bulges are specified on the data sheets in section 2 of the MR.

2 Applicable Documents

2.1 General

2.1.1 Work shall be done in accordance with the referenced codes, standards and documents listed below, which are an integral part of this specification.

2.1.2 When specified chapters, sections, parts, or paragraphs are listed following a code, industry standard or reference document, only those chapters, sections, parts, or paragraphs of the document are applicable and shall be applied. If a date or revision is not listed, the latest issue, including addenda, at the time of the Request for Quote (RFQ) shall apply. When more than one code, standard or referenced document covers the same topic, the requirements for all must be met with the most stringent governing.

2.2 Codes

UBC 1997	Uniform Building Code
WAC 296-24	Washington Administrative Code General Safety and Health Standards
AISC N690-94	Specification for the Design, Fabrication, and Erection of Steel Safety-Related Structures for Nuclear Facilities, as tailored in Appendix A
AISC M016-1989	Manual of Steel Construction, Allowable Stress Design, Ninth Edition, as tailored in Appendix B
ASME NQA-1-1989	Quality Assurance Program Requirements for NuclearFacilities
NFPA 70-1999	National Electrical Code

2.3 Industry Standards

2.3.1 American Society for Testing and Materials (ASTM)

ASTM F593	Standard Specification for Stainless Steel Bolts, Hex Cap Screws and Studs
ASTM F594	Standard Specification for Stainless Steel Nuts

2.3.2 American Society of Mechanical Engineers (ASME)

ASME B31.3 1996	Process Piping
ASME Section V Article 6	Liquid Penetrant Examination
ASME Section V Article 9	Visual Examination
ASME Y14.100	Engineering Drawing Practices
ASME B18.2.1 1981	Square and Hex Bolts and Screws (Inch Series)
ASME B18.2.2 1987	Square and Hex Nuts (Inch Series)
ASME B30.20	Below-the-Hook Lifting Devices

2.4 Engineering Standards

Any additional Engineering Specifications/Standards proposed for use by the Seller shall be reviewed by the Buyer prior to incorporation into the design.

2.5 Reference Documents/Drawings

24590-WTP-3PS-SS90-T0001	Engineering Specification for Seismic Qualification of Seismic Category I/II Equipment and Tanks
24590-WTP-3PS-P000-T0001	Engineering Specification for Piping Material Classes General Description and Summary
24590-WTP-3PS-JQ06-T0003	Engineering Specification for Seismic Qualification of Control and Electrical Systems and Components
24590-WTP-3PS-JQ06-T0005	Engineering Specification for Environmental Qualification of Control and Electrical Systems and Components
24590-WTP-3PS-JQ07-T0001	Engineering Specification for Instrumentation for Package Systems
24590-WTP-3PS-JR00-T0010	Engineering Specification for Liquid Effluent Gamma Monitor - QL
24590-WTP-3PS-JV15-T0001	Engineering Specification for Actuators for On/Off Valves
24590-WTP-3PS-EKP0-T0001	Engineering Specification for Electrical Requirements for Packaged Equipment
24590-WTP-3PS-PS02-T0001	Engineering Specification for Shop Fabrication of Piping
24590-WTP-3PS-G000-T0003	Engineering Specification for Packaging, Handling and Storage Requirements
24590-WTP-3PS-G000-T0001	General Specification for Supplier Quality Assurance Program Requirements
24590-WTP-3PS-G000-TP002	Engineering Specification for Positive Material Identification (PMI)
24590-WTP-DC-ST-01-001	Structural Design Criteria
24590-WTP-3PS-PV00-T0001	Engineering Specification for Technical Supply Conditions for Valves
24590-WTP-3PS-AFPS-T0001	Engineering Specification for Shop Applied Special Protective Coatings for Steel Items and Equipment
24590-WTP-PW-P30T-00001	WTP End Prep Detail for Field Butt Welds
24590-WTP-3PS-SS00-T0002	Engineering Specification for Welding of Structural Stainless Steel and Welding of Structural Carbon Steel to Structural Stainless Steel
24590-WTP-3PS-FB01-T0001	Engineering Specification for Structural Design Loads for Seismic Category III & IV Equipment and Tanks
RR-C-271D	Federal Specification Chains and Attachments, Welded and Weldless
DOE-RL-92-36	Hanford Site Hoisting and Rigging Manual - Hoists, Jib Cranes, and Monorail Systems
OSHA 29 CFR 1910.179	Occupational Safety and Health Standards Overhead and Gantry Cranes

3 Design Requirements

3.1 Basic Function

To support the use of 'hands on' maintainable equipment for process applications in out-cell areas, the Process Bulges are required to provide confinement structures for the safe operation and maintenance of process equipment such as pumps, valves, instruments and associated equipment. The Process Bulges shall have an expected working life of 40 years. Where specific components cannot meet this requirement they shall be identified and a mechanism for their replacement and/or maintenance shall be incorporated into the design.

3.1.1 Process Pumps

3.1.1.1 The Buyer shall supply all process pumps. The process pumps are vertically mounted centrifugal canned motor type and facilitate top-access maintenance techniques.

3.1.1.2 The Seller shall be responsible for the installation of the pumps including all necessary services, supports, electrical and instrumentation requirements.

3.1.1.3 The pump impeller and motor assembly shall be removable vertically.

3.1.1.4 When indicated on the P&ID the Seller shall furnish the pumps with a cooling water flush line to the motor/bearing assembly. The water flush shall be sacrificial and utilized only where the process fluid is unsuitable for use as the cooling medium.

3.1.1.5 Pump motor housings should be 'potted' to minimize internal fluid hold-up and should be oil free.

3.1.1.6 Power and instrumentation cabling to the pump/motor shall be run in sealed stainless steel conduit through the pump access plate to a terminal box mounted on the pump/motor access plate.

3.1.1.7 Pump supports shall be rigid to minimize pump vibration, deflection, and nozzle loadings.

3.1.1.8 If the pump includes a recirculation cooling water flush line, the line shall be hard piped to the pump, with a removable line from the top of the motor. If a cyclone solids separator is included, it shall be placed to allow an open vertical path for removal of the pump impeller and motor assembly. The cyclone solid separator shall be supported from the side of the Bulge containment.

3.1.2 Process Valve Assemblies

3.1.2.1 Unless otherwise specified in the MR, the Seller shall purchase the valves, extended drive spindles and actuators from the Buyer's valve distributor at the pre-negotiated firm unit prices set up in a blanket Purchase Order (PO). The Buyer will provide the valve distributor and PO number upon issuance of the MR for the Bulge(s).

3.1.2.2 Valves located inside the Process Bulge shall be top accessible valves with extended drive spindles. They shall be operated with either a pneumatic actuator or manually, external to the Bulge confinement. Each drive spindle requires the ability to be locked in place, external to the Bulge.

3.1.2.3 Actuators are pneumatic piston types and supplied complete with solenoid pilot valve, position limit switches, and visual semaphore indication. Actuators shall be Fieldbus interface compatible in accordance with specification 24590-WTP-3PS-JV15-T0001, *Engineering Specification for Actuators for On/Off Control Valves*.

3.1.2.4 All actuator/valve assemblies shall be 'fail closed' type unless otherwise stated on the P&ID.

3.1.2.5 All actuators shall be located externally on the top face of the Bulge. A nameplate shall be placed on top of each actuator to allow identification of the valve from above. Refer to 24590-WTP-3PS-JV15-T0001, *Engineering Specification for Actuator On/Off Valves*, section 7.1, Nameplate, for general mechanical nameplate requirements and attachment details.

3.1.2.6 Manual valves shall have a label attached to the top cap assembly. The label shall identify the valve number and position indication. Nameplate material shall be three-ply laminated plastic with white face, black core. The nameplate size shall be 2 1/2-inch length, 1 inch wide and 1/16-inch thickness. The letter size shall not be smaller than 1/4 inch; font shall be condensed gothic text, and engrave letters through the core with a round or square end cutter; V-shaped are not acceptable and shall be permanently affixed with by means of adhesive and 316 stainless steel screws.

3.1.2.7 Valve tags shall be removed from the valve bodies and attached to the top cap assemblies, external to the Bulge, to prevent them from becoming a sump plugging hazard if they become disconnected from the valve.

3.1.2.8 Extended Drive Shafts connecting the actuators to the valves shall be fitted with rotary seals to maintain confinement, and designed with double universal joints and a telescopic section to allow movement/misalignment of the valves in all three planes. In Bulges with shielding the Extended Drive Shaft shall be designed to prevent a vertical shine path.

3.1.2.9 The Seller shall furnish an air manifold (1" diameter minimum) on the top face of the Process Bulge to supply air to the valve actuators, complete with an air filter and pressure regulator. Each actuator shall be connected to the manifold using 3/8" 316 flexible stainless steel braided tubing and an isolation valve. The manifold and flexible connections shall be sized for the concurrent operation of all actuators. The location of the manifold should be routed so as to minimize the length of connections but must not prevent the removal of any access plate or plug.

3.1.2.10 Each air isolation valve requires a valve nameplate. The nameplate shall have the same number as its corresponding process valve.

3.1.2.11 The Seller shall provide a Valve Inspection Report detailing items inspected, dimensional inspections performed, verification of inspections required by section 5 and 11 of 24590-WTP-3PS-PV00-T0001, *Engineering Specification for Technical Supply Conditions for Valves,* as well as 8.3 of 24590-WTP-3PS-JV15-T0001, *Engineering Specifications for Actuators for On/Off Control Valves* by valve manufacturer (as a minimum). Results shall be documented and submitted in accordance with Section 3 (G-321-V Form) of the MR.

3.1.3 Instrumentation

3.1.3.1 Unless otherwise specified in the MR, the Seller shall purchase the instruments from the Buyer's instrumentation distributor at the pre-negotiated firm unit prices set up in a blanket Purchase Order (PO). The Buyer will provide the instrumentation distributor and PO number upon issuance of the MR for the Bulge(s).

3.1.3.2 Specific instrumentation and control requirements for the Process Bulges shall be in accordance with specification 24590-WTP-3PS-JQ07-T0001, *Engineering Specification for Instrumentation for Package Systems.*

3.1.3.3 Instrumentation signal transmission shall be per the instrumentation datasheet.

3.1.3.4 When the instrument datasheet calls for Foundation Fieldbus, appropriate junction devices and compliant cable products shall be provided. Systems shall consist of 1) Appropriate four or eight spur blocks with stainless steel receptacles Pepperl + Fuchs F2-JBSC-4.FF.7/8S or F2-JBSC-8.FF.7/8S or Buyer approved equal. 2) Spur cable shall be armored type, Pepperl + Fuchs C-V9-G-OR-XXXM-PVC-V9-FF-S or Buyer approved equal. 3.) All unused spur block points shall be capped with a closure cap. Pepperl + Fuchs V9-R-F-COV or Buyer approved equal. The location of the junction should be on the side of the Bulge. Spur cable shall be routed so as to

minimize the length, but should not prevent removal of any access plate.

3.1.3.5 Each spurblock shall have a nameplate attached to the Bulge near the associated spurblock. These nameplates shall identify the spurblock tag number, spurblock terminals, and associated equipment/instrument by terminal connection.

3.1.3.6 Where Foundation Fieldbus is not used, terminals and junction boxes shall be provided for instrument signals in accordance with specification 24590-WTP-3PS-JQ07-T0001, *Engineering Specification for Instrumentation for Package Systems.*

3.1.3.7 ITS instrumentation systems and components qualification shall be in according with specification 24590-WTP-3PS-JQ06-T0005, *Engineering Specification for Environmental Qualification of Control and Electrical Systems and Components*. The Buyer will provide requirements to the Seller with Environmental Qualification Data Sheets (EQDS).

3.1.3.8 Gamma Monitor design shall be in according with specification 24590-WTP-3PS-JR00-T0010, *Engineering Specification for Liquid Effluents Gamma Monitor - QL.*

3.1.4 Electrical

3.1.4.1 All electrical equipment and material, including industrial control panels and cabinets that are assemblies of industrial control devices, shall be suitable for installation and use in conformity with the provisions of NFPA 70-1999. Suitability of equipment shall be evidenced by listing or labeling as a completed assembly by Underwriters Laboratories (UL). Equipment and assemblies not listed or labeled shall be required to bear a UL "Field Evaluated Product" mark. Equipment and materials listed, labeled or field evaluated by other nationally recognized testing laboratories (NRTLs) as recognized by OSHA, may be accepted only after receipt of prior written approval from the Buyer.

3.1.4.2 Refer to specification 24590-WTP-3PS-EKP0-T0001, *Engineering Specification for Electrical Requirements for Packaged Equipment,* for AC voltage requirements.

3.1.4.3 A motor starter and controller shall be integral to the 480V MCC, 13.8/4.16 kV - 480V AC Secondary Unit Substation (Load Center), or the 13.8 kV switchgear. A local controller shall be used if specified. Refer to specification 24590-WTP-3PS-EKP0-T0001, *Engineering Specification for Electrical Requirements for Packaged Equipment,* for general information.

3.1.4.4 Refer to specification 24590-WTP-3PS-EKP0-T0001, *Engineering Specification for Electrical Requirements for Packaged Equipment,* for cable and wiring requirements.

3.1.4.5 Refer to specification 24590-WTP-3PS-EKP0-T0001, *Engineering Specification for Electrical Requirements for Packaged Equipment,* Appendix A, for nameplate requirements for electrical enclosures, equipment, and devices.

3.1.5 Bulge Construction

3.1.5.1 Process Bulges shall generally be comprised of a pipework assembly including pumps, instruments, valves and fittings as required, a confinement assembly, a confinement support structure, and when required, a Maintenance Platform and/or a shielding assembly.

3.1.5.2 Process Bulges shall be furnished with 1" diameter removable inspection plugs to allow access for a 'video-scope'. The plugs shall be located to provide the best access for the viewing of all internal equipment. The number of inspection plugs shall be minimized.

3.2 Performance

3.2.1 Process Bulges shall be designed and fabricated to fulfill the mechanical and process requirements identified on the Data Sheets and drawings identified under section 2 of the MR.

3.2.2 The Seller shall demonstrate that air operated valves complete a full on-off cycle in less than 5 seconds. Refer to 24590-WTP-3PS-JV15-T0001, *Engineering Specification for Actuators for On/Off Valves*, for supplied plant air pressure.

3.2.3 Actuators shall be sized for 80 psig supply pressure.

3.3 Design Conditions

3.3.1 Process Bulge pipework shall be designed in accordance with the Piping Class Sheets identified in the Process Bulge Data Sheet. Refer to specification 24590-WTP-3PS-P000-T0001, *Engineering Specification for Piping Material Classes General Description and Summary* for general requirements. Specifications for individual pipe classes will be provided, as needed, with the MR.

3.3.2 A recommended spare parts list shall be generated for all components requiring maintenance/replacement over a 40 year life.

3.4 Environmental Conditions

3.4.1 The RPP-WTP complex is at approximately 700 feet above sea level.

3.4.2	Atmosphere:	Process Bulge	Operating Position
	Dry-bulb Temperature	140°F max	50-80°F
	Relative Humidity	100% max	85%

3.4.3 Ambient lighting levels for Process Bulge areas will be 30 Lumens/ft^2

3.4.4 Radiation exposure will be as indicated on the Process Bulge Data Sheets and Instrument Data Sheets.

3.4.5 Bulges may be stored outdoors for 12 months prior to installation at ambient extreme temperatures ranging from minus 23 °F dry-bulb to 113 °F dry-bulb and relative humidity of 0 to 100%.

3.5 Mechanical Requirements

Process Bulges shall be designed and fabricated in accordance with the technical documents identified under section 2 of the MR. Variations to the design documents are permitted provided that the Seller's proposals meet the criteria stated herein, are communicated through drawings, and a general description of the proposed variation is reviewed by the Buyer prior to fabrication.

3.5.1 Process Bulge Confinement – General Requirements

3.5.1.1 Process Bulge confinement shall be designed to meet the requirements of AISC N690 – 94, *Specification for the Design, Fabrication, and Erection of Steel Safety-Related Structures for Nuclear Facilities.*

3.5.1.2 The Process Bulge confinement shall be fabricated using fully radiused (1" internal radius) corners along side and bottom edges to assist decontamination. Confinement plate thickness shall be as specified on the Process Bulge Data Sheet.

3.5.1.3 The confinement shall incorporate removable roof plates bolted to a roof support structure using 3/8" UNC stainless steel welded stud bolts and 1/8" thick flat elastomer gaskets. The roof plates shall provide gross access to the Bulge internal systems.

3.5.1.4 The roof plates support structure shall be fabricated from 4"x3" stainless steel angle section as a minimum.

3.5.1.5 The confinement roof structure shall be designed to support the static and dynamic loads including seismic loads from the valve actuator assemblies.

3.5.1.6 All confinement welds shall be continuous.

3.5.1.7 The base of the confinement shall slope in all directions to a fabricated drain. Minimum design requirements for the drain shall be a single strainer, designed to be manually removable from the exterior of the Bulge. When noted on the Process Bulge Datasheet, the drain shall be fitted with a primary and a secondary strainer and level instrumentation. The primary strainer shall incorporate a weir in its design to enable leak detection and level instrument testing. The primary strainer assembly shall be operable from the outside of the Bulge via an extended drive spindle.

3.5.1.8 As a minimum, the floor of the Bulge shall have a fall of 1:100 and the drain shall be located at the lowest point.

3.5.1.9 The base shall be adequately supported externally to prevent liquid traps caused by distortion during welding.

3.5.1.10 The confinement's external and internal surface finish shall be equal or better than that specified on the Process Bulge Data Sheet. All proposed surface finishes must be to a standard approved by the Buyer's inspector.

3.5.1.11 The confinement shall be designed for an internal negative pressure of 12 inches water gauge and a positive internal pressure equal to that when completely filled with water. There shall be no internal stiffeners unless approved by the Buyer.

3.5.1.12 Wash rings/spray nozzles shall be installed within the Bulge confinement at a high level to facilitate decontamination of the Bulge and pipework. The Seller shall determine the number and position of the wash rings. If spray nozzles are used, threaded connections are allowed at the connection of the nozzle and the pipe. Refer to the Process Bulge Data Sheet for pressure and flow limits supplied to the wash ring/spray nozzle.

3.5.1.13 A HEPA filter connection shall be located above the maximum height of the Bulge confinement.

3.5.2 Process Bulge Support Frame

3.5.2.1 The Bulge support frame shall be designed to support the confinement structure completely filled with water and, when no shielding is required, a Maintenance Platform and column davits as required.

3.5.2.2 The confinement structure shall be installed within a Bulge support frame fabricated using a minimum of 4" x 2" heavy gauge stainless steel rectangular hollow section.

3.5.2.3 The confinement shall incorporate stiffening pads at all frame connection points and connection shall be accomplished using continuous fillet welds.

3.5.2.4 The support frame shall incorporate leveling and hold-down features to secure the Bulge to the building structure, and to satisfy the requirements noted in section 3.6.1. The leveling and hold-down features shall conform to the Buyer's embed plate location drawings, provided in section 2 of the MR.

3.5.2.5 The support frame shall be designed such as to eliminate open section ends or any open ends shall be closed with fully welded end plates.

3.5.2.6 The support frame will be welded to the facility embeds by Buyer. Seller shall specify weld details to satisfy the seismic requirements in section 3.6.1 of this specification.

3.5.3 Process Bulge Shielding

3.5.3.1 Where indicated on the Process Bulge Data Sheets the Bulges shall be fitted with carbon steel shielding plates to the specified thickness.

3.5.3.2 Shielding structures shall be completely self-supporting and shall be constructed using a layered methodology, as required, with each layer of shielding being securely bolted and doweled to its predecessor. The initial layer of shielding plates shall be bolted to the Bulge support frame to ensure positional accuracy of shielding access plugs. 180° and 90° butt joints between adjacent shielding plates shall be alternately overlapped to maintain the required shielding thickness.

3.5.3.3 Shielding structures shall be designed to support the Maintenance Platform, and column davits, when required.

3.5.3.4 Access plugs shall be provided in the roof shielding plates with and instrument access.

3.5.3.5 Access plugs shall be designed to be locked in position.

3.5.3.6 When specified on the Process Bulge Data Sheet internal shielding plates shall be provided between adjacent pumps (when more than one pump is installed) and between pump and valve sections of the Process Bulge.

3.5.3.7 The maximum weight for a single shielding plate or plug required to be removable for maintenance operations shall not exceed 500 pounds. The minimum thickness of the shielding plate shall not be less than 1".

3.5.3.8 The maximum weight for a single shielding plate not routinely removed for maintenance operations shall not exceed 2,500 pounds. The minimum thickness of the shielding plate shall not be less than 1".

3.5.3.9 Each plate shall be uniquely identified using 1/2" high stamped characters to assist assembly and have suitable attachment points for lifting eyes. A sequentially numbered assembly map shall also be provided to assist in installing the shielding plates on site.

3.5.3.10 Where extended drive spindles pass through shielding plates the drive spindles shall be designed such that shielding integrity is not compromised.

3.5.3.11 Shielding will be welded to the facility embeds by Buyer. Seller shall specify weld details to satisfy the seismic requirements in the section 3.6.1 of this specification.

3.5.4 Maintenance Platforms

3.5.4.1 The Maintenance Platforms shall be designed to meet the requirements set forth in WAC 296-24, *General Safety and Health Standards,* Buyer specification 24590-WTP-DC-ST-01-001, *Structural Design Criteria,* and all other applicable codes and standards listed in section 2 of this specification.

3.5.4.2 The Maintenance Platform shall have a grid of removable grating sections to allow access to the Bulge below. Each removable section shall be positioned to facilitate maintenance of the Bulge equipment.

3.5.4.3 The Maintenance Platforms shall include guardrails. The guardrails shall be designed per WAC 296-24-750.

3.5.4.4 All openings in the guardrail shall have a safety gate or chain designed per the requirements of WAC 296-24-750.

3.5.4.5 The Maintenance Platform shall be designed in sections and shall be removable. The maximum weight of one section shall not exceed 2,500 pounds. The sections shall be bolted together and bolted to the supporting frame or shielding.

3.5.4.6 The Maintenance Platform shall be bolted to either the external layer of shielding, or the Bulge support frame if no shielding is required.

3.5.4.7 A fixed ladder shall be provided to allow access onto the Maintenance Platform. The ladder shall meet the requirements set forth in WAC 296-24-810. Use a concentrated load of 300 pounds for the ladder design.

3.5.5 Lifting Points

3.5.5.1 Bulges shall not be lifted with the shielding structure attached.

3.5.5.2 External pipework and fittings shall not be used for lifting.

3.5.5.3 Lifting points shall accept standard lifting equipment; chain blocks, wire rope or braiding shall not be permitted. If applicable, the lifting lugs shall be designed to accept Crosby shackles or equivalent meeting Federal Specification RR-C-271D.

3.5.5.4 All lifting attachments shall have either a safety factor of 3 based on the material yield strength, or 5 based on the material ultimate strength, whichever is most conservative. The lifting points shall have a label clearly identifying its unique number and SWL.

3.5.5.5 All lifting points shall be proof tested in situ and provided with test and examination certificates.

3.5.5.6 Items of equipment having eyebolts fitted, or having lifting points identified, shall be such that the point of lift is over the center of gravity of the equipment. Fitted eyebolts shall be removable for examination.

3.5.5.7 Seller shall provide any special designed lifting equipment not available from a commercial source. Such equipment may include, but is not limited to, rigging devices, such as spreader beams, structural lifting devices, strongbacks, and yokes. Rigging devices shall be designed, tested, and tagged in accordance with the applicable requirements of ASME B30.20.

3.5.6 Fasteners

3.5.6.1 UNC series threads shall be used for all screw fasteners and components with mating threads. This thread form shall be used throughout unless otherwise specified on equipment datasheets.

3.5.6.2 Steel bolts, screws, and nuts shall be in accordance with ASME B18.2.1-1981 & B18.2.2-1987.

3.5.6.3 Stainless steel bolts and cap screws shall be used except where repeated assembly and disassembly are required. In that case bolts and cap screws shall be fabricated from 'Nitronic 60' or equivalent to prevent galling. Stainless steel nuts shall be of type 300 stainless steel in accordance with ASTM F594, unless otherwise stated.

3.5.6.4 Welded Stud Connectors: Capacitor discharge stainless steel weld studs shall be ASTM F593, with the following minimum mechanical properties:

a. Tensile Strength:	95,000 psi
b. Yield Strength:	60,000 psi
c. Elongation:	20% in 4 diameters

3.5.6.5 The use of hexagon headed bolts with sufficient clearance for socket wrenches is preferred. The range of bolt sizes shall be kept to a minimum in order to limit the number of tools required.

3.5.6.6 High tensile steel fasteners shall not be employed in the construction of lifting equipment.

3.5.6.7 Bolts and set screws in rotating or reciprocating components, or where subject to vibration, shall be locked by a split pin, tab washer or wire, subject to prior approval of the method by the Buyer. Set screws used for locking purposes do not require locking. Washers, plain or spring, shall not be used unless specifically called for on drawings.

3.5.6.8 Sufficient envelope clearances are required around the bolt head for sockets.

3.5.7 Pipework

3.5.7.1 All piping shall be designed to meet the requirements of ASME B31.3 1996.

3.5.7.2 All pipework systems shall be self-draining with no liquid traps. Direction of slope shall be as indicated on the P&ID. Unless otherwise specified on the Process Bulge Data Sheet the normal pipe slope shall be 1:120.

3.5.7.3 All materials for pumps, pipework, valves and fittings shall be in accordance with the P&ID and Process Bulge Data Sheet and fabricated using 100% butt-welded construction unless otherwise stated.

3.5.7.4 Radiographic examination shall be carried out on all primary confinement pipework butt-welds using 100% radiography for QL components or 20% radiography for all other quality levels.

3.5.7.5 Where pipework passes through shielding plates these penetrations shall be positioned such that shielding integrity is not compromised e.g. in areas that have no direct shine-path to the radiological source.

3.5.8 Wall Penetrations

3.5.8.1 All process pipework leaving the Bulge and penetrating a wall shall be contained within a sleeve pipe. This sleeve pipe will provide secondary containment for the primary pipe. Refer to Table 1 for

associated sleeve sizes. The Bulge drain, and ventilation line (when required), do not require a sleeve pipe.

3.5.8.2 For pipes sloping into the Bulges, the sleeve pipe shall penetrate the Bulge confinement. An anchor washer shall be welded to the high end of the sleeve. The low-end of the sleeve is open to the Bulge confinement, allowing the process pipe to move freely. See Figure 1.

3.5.8.3 For pipe sloping away from the Bulge confinement, the sleeve pipe shall be welded to the external side of the Bulge confinement. The low-end of the sleeve is open in the black cell, allowing the process pipe to move freely. See Figure 1.

3.5.8.4 The sleeve pipe and seal washer material shall be equal to that used for the Bulge confinement.

3.5.9 Floor Penetrations

3.5.9.1 All process pipework leaving the Bulge and penetrating a floor shall be contained within a sleeve pipe. The sleeve pipe will provide secondary confinement for the primary pipe. Refer to Table 1 for associated sleeve sizes. The Bulge drain, and ventilation line (when required), do not require a sleeve pipe See Figure 2.

3.5.9.2 The sleeve pipes shall be welded to the external side of Bulge confinement plate. The sleeve pipe material shall be equal to that used for the Bulge confinement.

3.5.9.3 The process Bulge skirt shall be welded to Bulge confinement, supplied by the Seller.

3.5.9.4 The Bulge foot plates (1/2" minimum thickness) shall be welded to the embed plates at the Bulge frame locations (one at each corner and other midpoints as determined by the Seller) by the Buyer after installation. The Bulge foot plate material shall be equal to that used for the Bulge frame. Seller shall specify weld details to satisfy the seismic requirements in section 3.6.1 of this specification.

3.5.10 Column Davits

3.5.10.1 All column davits shall be designed to operate in the space envelope indicated in the Process Bulge Data Sheet. The boom and mast dimensions shall be determined by the Seller.

3.5.10.2 The column davits shall meet the requirements of DOE-RL-92-36, *Hanford Site Hoisting and Rigging Manual Hoists, Jib Cranes, and Monorail Systems*, and OSHA 29 CFR 1910.179 *Occupational Safety and Health Standards Overhead and Gantry Cranes*.

3.5.10.3 The column davits shall meet the performance and material requirements identified in the Process Bulge Data Sheet.

3.5.10.4 The column davits shall be manufacture's standard products, having minimum capacity 500 lbs, unless otherwise specified in the Process Bulge Data Sheet.

3.5.10.5 Seller shall design the column davits to lift valves, actuators, pumps, top cover plates, shielding plugs, gratings, etc. for maintenance operations.

3.5.10.6 The column davits shall be supported by Process Bulge support frame. The thrust and pull forces under load shall be considered.

3.5.10.7 The column davits shall be design to be interchangeable between as many Process Bulges as reasonable. The quantity of the required column davits is specified in section 2 of the MR.

3.5.10.8 The location and the number of column davit supports shall be determined by the Seller, unless otherwise specified in Process Bulge Data Sheet.

3.6 Loadings

3.6.1 Seismic

3.6.1.1 The Seismic Category is identified on the Process Bulge Data Sheet.

3.6.1.2 Seismic Category (SC) I & II Equipment design shall be in accordance with specification 24590-WTP-3PS-SS90-T0001, *Engineering Specification for Seismic Qualification of Seismic Category I/II Equipment and Tanks* , 24590-WTP-DC-ST-01-001, *Structural Design Criteria*, and AISC N690-94.

3.6.1.3 For Seismic Category (SC) III & IV Equipment seismic design shall be in accordance with 24590-WTP-3PS-FB01-T0001, *Engineering Specification for Structural Design Loads for Seismic Category III & IV Equipment and Tanks*, 24590-WTP-DC-ST-01-001, *Structural Design Criteria*, UBC 1997 zone 2B requirements and AISC M016-1989.

3.6.1.4 Where required the Buyer will provide seismic data to enable the Seller to carry out a dynamic seismic analysis for each Process Bulge. Analyses shall be carried out for the pipework (including where applicable pumps with integral motors), confinement, support and shielding systems.

3.6.1.5 Where the ITS instrumentation system and component data sheets indicate SC-I for functional qualification, components shall be designed in according with specification 24590-WTP-3PS-JQ06-

T0003, *Engineering Specification for Seismic Qualification of Control and Electrical Systems and Components.*

3.6.2 Operation

3.6.2.1 All pumps, pipework, valves and fittings shall be adequately supported so as to minimize vibration, deflection and nozzle loadings.

3.6.2.2 Roof plate structures must be adequately supported to accommodate valve actuator static and dynamic loads.

3.6.3 Maintenance

3.6.3.1 During valve maintenance operations access will be required onto the shielding and roof plate structures. Therefore in addition to the normal operational loads these structures shall be designed to support personnel access loads of 500 lbs

3.6.4 Nozzle Load

3.6.4.1 The Seller shall design the Bulge to account for nozzle loading in the pipework. The loads listed in Table 2 are the minimum design loads acting on the Bulges from facility installed piping. The Seller shall determine the internal pipework loads and add these loads to the loads listed in Table 2 before calculating the nozzle load. Normal load combinations to be considered shall be: Weight + Thermal. Occasional loading combinations to be considered shall be: Weight + Thermal + Seismic I, II, III and IV.

3.6.4.2 Anchor points for wall penetrating pipework shall be the anchor washer, for pipes sloping into the Bulge confinement, and the Bulge confinement plate, for the pipes sloping away from the Bulge confinement. Refer to Figure 1.

3.6.4.3 Anchor points for floor penetrating pipework shall be the Bulge confinement.

3.6.4.4 When required, the Seller shall either design suitable reinforcement pads in the confinement plates or increase the confinement thickness.

3.7 Accessibility and Maintenance

3.7.1 Equipment that is expected to require maintenance, calibration or replacement e.g. pumps/motors, valves and instruments shall be located in areas of the Bulge that offer the best access; this will usually be the front and sides of the Bulge.

3.7.2 The location of equipment within the Bulge shall be such that any items requiring lifting during maintenance can be accessed with the column davits supplied by the Seller.

3.7.3 The Bulge roof plates and shielding top plates shall incorporate equipment access ports and shielding plugs respectively for the maintenance of pumps/motors, valves and instruments.

3.7.4 Each access port shall be contained within a bagging ring or tenting flange to facilitate bagging/tenting techniques to maintain confinement during maintenance.

3.7.5 Where indicated on the Process Bulge Data Sheet, pumps shall be fitted with extended bolts shall enable the pump motor/impeller unit to be unbolted from the pump casing without breaking confinement.

3.7.6 The centerline of the closest piece of internal equipment shall be a minimum of 15" from the cell wall.

4 Materials

4.1 Positive Material Identification

4.1.1 Refer to specification 24590-WTP-3PS-G000-TP002, *Engineering Specification for Positive Material Identification (PMI)* for Positive Material Identification requirements.

4.2 Construction

4.2.1 Seller shall provide Material Safety Data Sheets (MSDS) for all coatings and materials used in the construction of the Process Bulge.

4.2.2 Process fluids may contain caustic solutions (up to pH-14) but nitric acid solutions may also be used for decontamination of the pipework, pump, valves, and instruments/instrument tubing both inside and outside of the pipework assembly. All materials selected by the Seller shall be suitably corrosion and radiation resistant for the specified service.

4.2.3 Materials shall be as specified in the Process Bulge Data Sheet and Instrument Data Sheets. Any proposed substitutes or concessions shall be agreed with the Buyer prior to procurement or incorporation into the work.

4.2.4 All materials shall be new and comply with this specification and relevant standards.

4.2.5 All flanges and pipe fittings shall be welded-neck and long radius types respectively unless otherwise specified and shall conform to ANSI standards.

4.2.6 No threaded flanges or fittings shall be used for process pipework.

4.2.7 Material certificates shall be supplied for all stainless steel pipe, plate, sheet and sections. Materials without specified mill test certificates must be approved by the Buyer prior to ordering, however additional material analysis may be required, either by wet or dry methods, to verify compliance with test certification or to determine material composition. Where such testing is required, any additional costs shall be the responsibility of the Seller.

4.2.8 The Seller shall have and implement provisions to ensure that materials used or supplied are not counterfeit or of suspect origin. Particular attention should be given to high strength bolting material (grade 5 strength equivalent and higher) and pipe fittings.

4.3 Prohibited Materials

4.3.1 No asbestos containing materials, bronze, copper, lead, zinc, mercury, tin, antimony, cadmium, or other low melting point metals, PCBs or compounds of lead base paints or lubricants containing lithium or boron shall be used. 'Teflon' or compounds thereof must be qualified for use with the radiation levels specified on the Process Bulge Data Sheet.

4.4 Special Requirements

4.4.1 Where special requirements or restrictions are to be applied to the established items, these will be specified on the Process Bulge Data Sheets or in accompanying contractual documentation. In the absence of such instructions, the manufacturer's standard product shall be supplied as specified or as approved by the Buyer.

4.5 Storage of Special Materials (e.g., stainless steel) prior to work

4.5.1 Stainless steel is susceptible to corrosion caused by the contact and interaction with incompatible materials. All stainless steel material shall be stored in separate areas away from other materials.

4.5.2 The Seller shall submit Material Control Procedures for controlling, handling, storage and traceability of materials such as weld rods, production items or Government Owned materials.

5 Fabrication

The Seller shall obtain written Final Design approval from the Buyer prior to the start of fabrication activities.

5.1 General Requirements

5.1.1 For all piping, refer to Specification 24590-WTP-3PS-PS02-T0001, *Engineering Specification for Shop Fabrication of Piping*. All welding procedures must be pre-approved by the Buyer prior to the start of fabrication.

5.1.2 Structural welding procedures shall be carried out in accordance with AISC N690 – 94, *Specification for the Design, Fabrication, and Erection of Steel Safety-Related Structures for Nuclear Facilities*, and specification 24590-WTP-3PS-SS00-T0002, *Engineering Specification for Welding of Structural Stainless Steel and Welding of Structural Carbon Steel to Structural Stainless Steel*. All welding procedures must be pre-approved by the Buyer prior to start of fabrication.

5.2 Assembly

5.2.1 Flatness of the completed Bulge confinements shall be 1/8" per foot, with no greater than 3/16" over the entire length of the Bulge except for areas around cutouts. Areas around cutouts shall be flat within 1/16" per foot.

5.2.2 Cutout locations shall be within +/- 1/8" and cutout size shall be within +/- 1/16" except where noted on the Buyer sketches.

5.2.3 All Bulge confinement corners shall have a 1" +/- 1/16" internal radius.

5.2.4 The minimum material thickness for Bulge confinements shall be in accordance with the Process Bulge Data Sheet.

5.2.5 The Process Bulges shall have edges that are both smooth and not sharp to the touch.

5.2.6 The method of fabrication shall minimize the number and amount of seams, overlaps, or other discontinuities, which could trap radioactive contamination.

5.3 Tolerances

Manufacturing and fabrication tolerances for all equipment, accessories, and components shall conform to the following requirements:

5.3.1 Machined Components:

5.3.1.1 Machined surfaces shall be aligned within +/- 0.5 degrees of design conditions.

5.3.1.2 THICKNESS: Thickness tolerances shall conform to the requirements of the referenced commercial standard. In the absence of such criteria, allowable thickness shall be plus 0.010 inches, minus 0.005 inches.

5.3.1.3 DIMENSIONS:

a) 0-4 inch	+/- 0.010 inch.
b) 4 inch – 36 inch	+/- 0.02 inch.
c) 3 feet – 10 feet	+/- 0.03 inch.
d) 10 feet – 20 feet	+/- 0.06 inch.
e) Over 20 feet	+/- 0.13 inch

5.3.2 Fabricated Components:

5.3.2.1 Nozzle and flange alignment shall be within +/- 0.5 degrees of design conditions.

5.3.2.2 Rotating shaft alignment shall be specified by the Seller to minimize valve turning torque at the actuator.

5.3.2.3 Thickness tolerances shall conform to the requirements of the referenced commercial standard applicable to the material being fabricated. When plate thicknesses are specified herein or in other supporting documentation they shall be considered to mean minimum thickness.

5.3.2.4 DIMENSIONS:

a) 0-4 inch	+/- 0.020 inch.
b) 4 inch – 36 inch	+/- 0.04 inch.
c) 3 feet – 10 feet	+/- 0.06 inch.
d) 10 feet – 20 feet	+/- 0.13 inch.
e) Over 20 feet	+/- 0.25 inch

5.3.2.5 Weld joint preparation, for field welds, shall be in accordance with drawing 24590-WTP-PW-P30T-00001, *WTP End Prep Detail for Field Butt Welds*.

6 Tests and Inspections

6.1 Non-Destructive Examinations

6.1.1 Unless otherwise specified all welds shall be inspected in accordance with the requirements outlined in the reference 24590-WTP-3PS-PS02-T0001, *Engineering Specification for Shop Fabrication of Piping*. All primary pipework for QL components shall be inspected in accordance with Appendix A of 24590-WTP-3PS-PS02-T0001.

6.2 Personnel Qualifications

6.2.1 Refer to specification 24590-WTP-3PS-PS02-T0001, Engineering Specification for Shop Fabrication of Piping.

6.3 Shop Tests

6.3.1 General Requirements

6.3.1.1 The Process Bulge piping shall be hydrostatically tested in accordance with ASME B31.3 1996. The Seller shall submit hydrostatic test procedures to Buyer for review and permission to proceed, prior to commencement of testing. The pipework shall be dried after testing.

6.3.1.2 The Process Bulge confinement shall be flooded with test water. After a period of 12 hours there shall be no visible sign of leakage. The confinement shall be dried after testing.

6.3.1.3 Test water used for hydrostatic testing shall be tested for chlorides. The chloride content of the test medium shall not exceed 50 ppm and the water temperature shall not exceed 120°F.

6.3.1.4 Where installed, the Seller shall demonstrate a full removal and replacement operation for pumps, valves, and instruments utilizing the tent or bag-in/bag-out method. The Seller shall provide maintenance manual(s) detailing procedures for removal and replacement of valves, instrumentation, and pumps. Spare o-rings, valve seats, and seals shall be ordered to replace original maintainable parts used in the removal/replacement demonstration. The Seller shall demonstrate the assembly and disassembly of the shielding.

6.3.1.5 The Seller shall demonstrate the correct operation of all valves.

6.3.1.6 Seller shall submit procedures for and perform a wiring insulation test and continuity check. Refer to 24590-WTP-3PS-EKP0-T0001, *Engineering Specification for Electrical Requirements for Packaged Equipment,* section 7.1 for additional testing requirements. Results of the test and check shall be included in the required documentation packages.

6.3.1.7 Seller shall demonstrate all internal equipment and surfaces are thoroughly washed by the spray rings/nozzles.

6.3.1.8 Seller shall demonstrate operation, assembly and disassembly of the column davits.

6.3.2 Surface Finish Inspection

6.3.2.1 The Seller shall develop and implement a procedure for visually inspecting the surface finish of each manufactured item. The inspections shall be performed after completion of all fabrication, cleaning, and testing, and just prior to final packaging.

6.3.2.2 Inspection of weld surface finishes, shall confirm that design requirements listed on the Process Bulge Datasheet have been met.

6.3.2.3 Following inspection, the Seller shall document acceptance of surface finishes.

6.3.3 Visual Weld Inspection

6.3.3.1 The Seller shall develop and implement a procedure to perform visual weld inspections (visual tests, VT) to inspect each weld. The inspection for piping shall be developed in accordance with ASME B31.3 - 1996, and shall include inspection materials and acceptance criteria. The remaining VT shall be developed in accordance with ASME Section V, Article 9. The visual weld inspection procedure shall be submitted to the Buyer for review and approval, prior to the inspection. Surface porosity and undercutting is not allowed.

6.3.3.2 The Seller shall prepare a visual weld inspection report for each fabricated item, which records inspection results, the date and time of inspection, and signatures of certified inspection personnel performing the inspection.

6.3.3.3 The visual weld inspection reports shall be included in the required documentation packages.

6.3.3.4 The Seller shall summarize the VT results in the weld map report for each item.

6.3.3.5 The Seller shall notify the Buyer in advance of inspection. The Buyer may send representatives to witness or perform an independent inspection.

6.3.4 Liquid Penetrant Test

6.3.4.1 The Seller shall develop and implement a procedure to perform a liquid penetrant test (PT) to inspect each weld, excluding handrails. PT testing for piping shall be in accordance with ASME B31.3 – 1996. All Remaining PT shall be developed in accordance with ASME Section V Article 6, and shall include inspection materials, dwell time for dye and developer, and acceptance criteria. The liquid penetrant procedure shall be submitted to the Buyer for review and acceptance, prior to testing.

6.3.4.2 Acceptance criteria for PT inspection shall be in accordance with ASME B31.3 - 1996. Surface porosity and undercutting is not allowed.

6.3.4.3 The Seller shall prepare a liquid penetrant test report for each weld connection on each fabricated item, which will record PT inspection results, the weld number, the date and time of inspection, and signatures of the certified inspection personnel performing the test.

6.3.4.4 The Seller shall include the liquid penetrant test reports in the required documentation packages.

6.3.4.5 The Seller shall summarize the PT results in the weld map report for each item.

6.3.4.6 The Seller shall notify the Buyer in advance of the test. The Buyer may send representatives to witness or perform an independent test.

6.3.5 Radiography

6.3.5.1 The Seller shall develop and implement a procedure to perform radiographic weld examinations of piping butt-welds as specified in 3.5.7.4. The inspection shall be developed in accordance with ASME B31.3-1996, and shall include inspection materials and acceptance criteria. The weld radiography procedure shall be submitted to the Buyer for review and approval, prior to performing the radiographic examinations.

6.3.5.2 The Seller shall prepare a weld inspection report for fabricated piping systems, which records inspection results, the date and time of the inspection, and signatures of certified personnel performing the inspection.

6.3.5.3 The weld inspection report shall be included in the required documentation packages along with the exposed film, a copy of the technique and the reader sheets. The film must be suitably packaged to preclude moisture and handling damage.

6.3.5.4 The Seller shall summarize the radiography results in the weld map report for each item.

6.3.5.5 The Seller shall notify the Buyer in advance of inspection. The Buyer may send representatives to witness or perform an independent inspection.

6.3.6 Final Inspection

6.3.6.1 The Seller shall develop and implement a procedure for final inspection of each fabricated item. The inspections shall be performed after completion of all fabrication, cleaning, and testing, and just prior to final packaging.

6.3.6.2 The Seller shall inspect all surfaces for contamination. Visible evidence of contamination is not acceptable.

6.3.6.3 The Seller shall prepare a final inspection report for each item, which documents the results of the final inspection. The Seller shall include the final inspection report in the documentation package for each piece.

6.4 Control of Measurement and Test Equipment

6.4.1 Testing shall be performed using calibrated equipment when required. The equipment shall be calibrated against certified measurement standards, having known valid relationships to national standards, at established intervals to ensure accuracy.

6.4.2 The Seller shall maintain records and mark equipment to show calibration status.

6.4.3 The Seller shall notify the Buyer when M&TE are found to be out of calibration after being used for inspection purposes, in compliance with this specification.

6.5 Inspection and Test Status

The Seller shall maintain a positive system for identifying inspection and testing status of items and systems.

6.6 Control of Nonconforming Items

The Seller shall provide a method of notifying the Buyer of fabrication items and activities, which do not conform to requirements.

7 Preparation for Shipment

7.1 General Requirements

7.1.1 Refer to section 7 of the Material Requisition for general requirements and Specification 24590-WTP-3PS-G000-T0003, *Engineering Specification for Packaging, Handling, and Storage Requirements.*

7.2 Cleanliness

7.2.1 Refer to 24590-WTP-3PS-PS02-T0001, *Engineering Specification for Shop Fabrication of Piping* for general requirements.

7.3 Painting

7.3.1 All ferrous surfaces other than corrosion resistant steel and finished machined mating surfaces shall be prepared and painted by the Seller in accordance with the paint manufacturer's instructions. Refer to specification 24590-WTP-3PS-AFPS-T0001, *Engineering Specification for Shop Applied Special Protective Coatings for Steel Items and Equipment* for painting requirements.

7.4 Tagging

7.4.1 A stainless steel nameplate containing the following information shall be rigidly attached to each Bulge. The nameplate shall be located in a prominent position for ease of visibility. The information shall be stamped or etched using 1/2" high characters. The nameplate shall include the following information, minimum:

Seller's Name/Address/Phone Number
Date of Manufacture
Buyer's Purchase Order Number
Seller's Contract Number
Plant Item Number
Weight of Assembly

7.4.2 When shipping loose bolting material, both QL and CM shall be placed in separate containers (box, bag). The container shall be marked with the Buyer Purchase Order Number, Plant Item Number, and Bill of Material item number to facilitate material control and assembly.

7.4.3 Each column davit shall be tagged with a permanent stainless steel tag indicating for which Bulges it was designed.

7.5 Packaging

7.5.1 Refer to 24590-WTP-3PS-G000-T0003, Engineering Specification for Packaging, Handling and Storage Requirements for general requirements.

7.6 Documentation

7.6.1 Seller shall ensure that appropriate documentation is prepared and, if required, signed by the appropriate person(s). The shipping documentation shall accurately reflect specific traceability to the items being shipped.

7.6.2 Seller shall ensure that appropriate documentation is prepared for the Process Bulges. At a minimum, documentation shall include the following information, as applicable:

- Manufacturer name, model number, and serial number
- Plant Item Number

7.7 Shipping Instructions

Shipping shall be conducted in accordance with Buyer specification 24590-WTP-3PS-G000-T0003, *Engineering Specification for Packaging, Handling and Storage Requirements.*

7.7.1 Process Bulges shall be shipped completely assembled. When required, shielding, Maintenance Platforms, and ladders shall be shipped separately.

7.7.2 Weatherproof shipping lists (two per packaged item) shall be prepared and submitted, and shall clearly identify the contents of each package sent to the Buyer. All submittals and shipping boxes shall be identified with the Buyer's PO number.

7.7.3 Seller shall provide a complete identification and location of temporary material contained within the equipment for shipment, handling, or storage that must be removed prior to commissioning (e.g., shipping blocks, glove bags, components shipped inside larger sections, etc.). In addition, the Seller shall provide instructions for the removal of temporary materials, as required.

7.7.4 The Process Bulges shall be mounted on skids, in crates, or in boxes, as suited for the intended method of transport. Lifting weight shall be clearly marked on both the equipment and its shipping documents.

8 Quality Assurance

8.1 General Requirements

The Quality Level will be identified on the Process Bulge Data Sheet and on the QA Data Sheet issued with the MR. Refer to section 9 of the Material Requisition for general requirements, and Specification 24590-WTP-3PS-G000-T0001, *General Specification for Supplier Quality Assurance Program Requirements.*

8.2 Quality (Q) Related Components

8.2.1 Seller shall have in place a QA program meeting the requirements of NQA-1 (1989), marked as applicable in the Supplier Quality Assurance Program Requirements Data Sheet attached to the MR, and Specification 24590-WTP-3PS-G000-T0001, *General Specification for Supplier Quality Assurance Program Requirements.*

8.2.2 The successful bidder must pass a pre-award survey by the Buyer. Seller shall demonstrate that its quality program is in compliance with the procurement quality requirements listed in the Supplier Quality Assurance Program Requirements Data Sheet. The Seller shall allow the Buyer, Buyer's Representative, and DOE access to their facility and records pertaining to this PO for the purpose of QA audits and surveillance at mutually agreed times.

8.2.3 All items shall be manufactured in accordance with the Seller's Quality Assurance Program that meets the requirements of NQA-1 (1989), and has been previously evaluated and accepted by the RPP-WTP QA organization.

8.2.4 Seller shall submit their QA program and work plan to the Buyer for review prior to commencement of work. The plan shall include documents and procedures to implement work and include a matrix of essential QA elements cross referenced with documents/procedures.

9 Configuration Management

Equipment and/or components covered by this specification are identified with Plant Item Numbers, shown on the data sheets included in section 2 of the MR. Bulges shall be identified in accordance with Tagging in section 7.4 of this specification.

10 Documentation and Submittals

10.1 General

10.1.1 Seller shall submit to the Buyer all detailed designs, documentation, procedures, instructions, calculations, analyses, manufacturer's data, inspection reports, test reports, certifications, certificates, manuals, MSDS, and drawings required per this specification, the applicable codes, standards, and reference documents in Section 2 of this specification, and the MR.

10.1.2 Seller shall submit to Buyer Engineering and Quality Verification documents in the forms and quantities shown in Form G-321-E, *Engineering Document Requirements,* and Form G-321-V, *Quality Verification Document Requirements* attached to the MR.

10.1.3 Seller shall submit a report identifying any deviations and/or conflicts per Section 2 of the MR to the Buyer for review.

10.1.4 All documentation submittal packages shall have a documentation inventory sheet attached, listing all documents and the number of pages.

10.1.5 All detailed designs, drawings, supporting calculations, supporting analysis, supporting models, procedures, instructions, manufacturer data, operations manuals, and maintenance manuals shall be issued to the Buyer for review prior to the manufacture of the Process Bulges, special tools, and/or purchase of special tools and gaskets.

10.1.6 Seller shall submit storage requirements and instructions for Buyer's review. Documentation shall include maintenance requirements for the equipment and its components while in storage.

10.1.7 Data sheets in section 2 of the MR shall be marked-up by the Seller and submitted to the Buyer for the review with the detailed design. Seller shall fill in all of the information that is marked as "To be determined by the vendor" and mark-up actual overall Process Bulge dimensions based on the detailed design.

10.1.8 Seller shall provide all operations manuals, maintenance manuals, and spare parts lists for Process Bulges and components, as applicable.

10.2 30% Design Review

10.2.1 Seller shall conduct a 30% design review with the Buyer. Seller shall submit all drawings, procedures, calculations, analysis, and supplementary information necessary to conduct the 30% design review to the Buyer for review.

10.2.2 Finalized outline dimensions for the Process Bulges shall be included in the 30% design review. Finalized dimensions shall, at a minimum, include the following:

- dimensioned layout drawings of the Process Bulge, shielding and Maintenance Platform
- pipe slopes and nozzle locations
- platform configuration and attachments, ladder location, and openings in the platform guardrails
- penetration in walls/floor details
- volume of the internal pipework
- weight of the Process Bulge including shielding and Maintenance Platform, where required
- anchor requirements (anchor size, location, layout, etc.)
- completed Buyer supplied Mechanical Data Sheets, Electrical Data Sheets, and Instrument Data Sheets, as applicable

- preliminary maintenance procedure, including bag-in/bag-out procedure.

10.3 60% Design Review

10.3.1 Seller shall conduct a 60% design review with the Buyer. Seller shall submit all drawings, procedures, calculations, analyses, and supplementary information necessary to conduct the 60% design review to the Buyer for review including as a minimum:

- equipment assembly/arrangement drawings
- shop detail drawings with sufficient detail to facilitate fabrication, manufacture, or installation. This includes a complete Bill of Material (BOM), internal piping details, cross-sectional details, structural details, and anchor details
- wiring diagrams including schematic diagrams and interconnecting wiring diagrams for electrical/instrumentation requirements
- instrument air schematic diagrams
- engineering calculations and analyses (seismic and nozzle loads)

10.4 90% Design Review

10.4.1 Seller shall conduct a 90% design review with the Buyer. Seller shall submit all drawings, procedures, calculations, analyses, and information necessary to conduct a 90% design review to the Buyer for review.

10.5 Final Design Review

10.5.1 The Seller shall provide a final design report including all design documents, manuals, and drawings that are required by this specification.

10.6 Drawings

10.6.1 All drawings shall be produced per the drawing practices set forth in ASME Y14.100, *Engineering Drawing Practices.*

10.6.2 As-built drawings, with final dimensions, shall be developed and submitted after completion of the Bulge fabrication.

10.7 Calculations

All calculations to be provided shall be orderly, complete, and sufficiently clear to permit verification. The body of the calculations shall include:

- a concise statement of the purpose of the calculation
- input data, applicable criteria, and stated assumptions
- a list of references used, including drawings, codes, standards, and computer programs (indicate the version or issue date)
- a discussion of rationale used for design assumption basis
- equations used for all computations
- numerical calculations including identification of units used
- a concise statement addressing the calculation results and/or recommendations
- a table of contents for complex calculations.

10.8 Schedules

10.8.1 A detailed schedule of engineering, document submittal, material purchase, fabrication, shop tests, and shipment shall be submitted.

10.8.2 All procedures and instructions shall be completed and submitted to the Buyer a minimum of eight (8) weeks prior to Process Bulge shipment.

11 References

11.1 Incorporated Design Changes

- 24590-WTP-3PN-MX00-00003
- 24590-WTP-SDDR-PROC-03-0106
- 24590-WTP-3PN-MX00-00004
- 24590-WTP-3PN-MX00-00006

11.2 Design Changes Incorporated by Reference

- 24590-WTP-SDDR-PROC-03-0102
- 24590-WTP-SDDR-PROC-02-0063

Figure 1 Typical Representation of Process Pipework and Sleeve Pipes Penetrating the Cell Wall

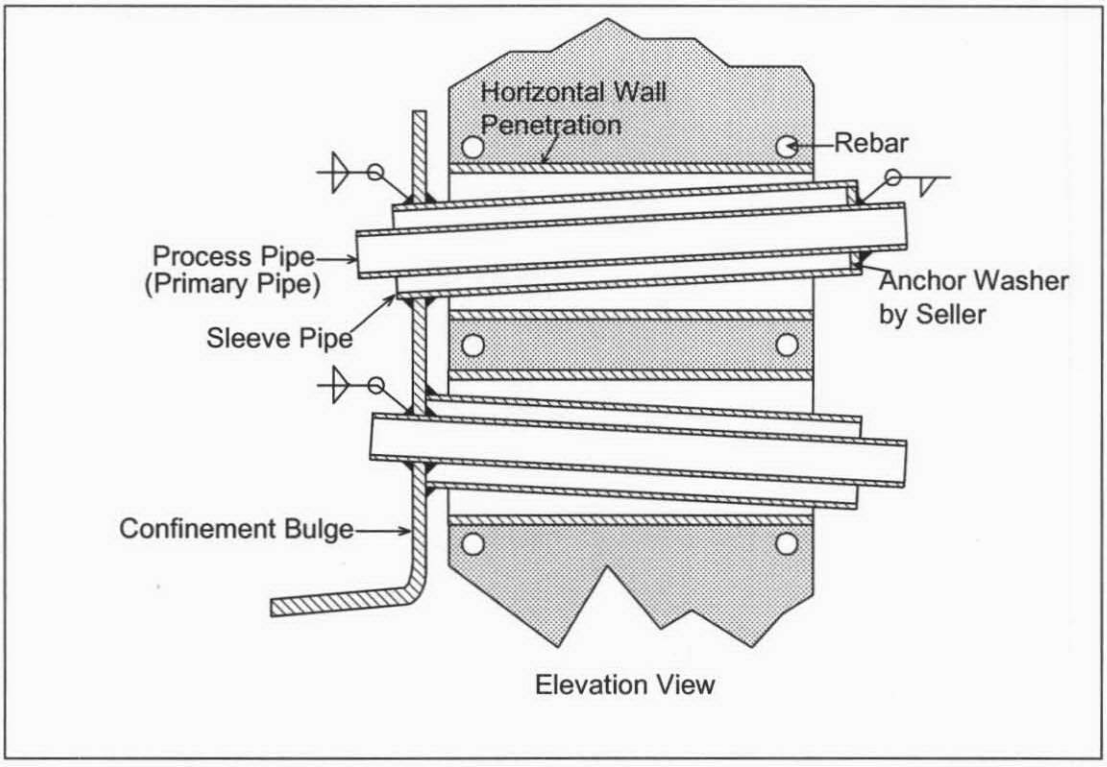

Figure 2 Typical Representation of Process Pipework and Floor Penetrations

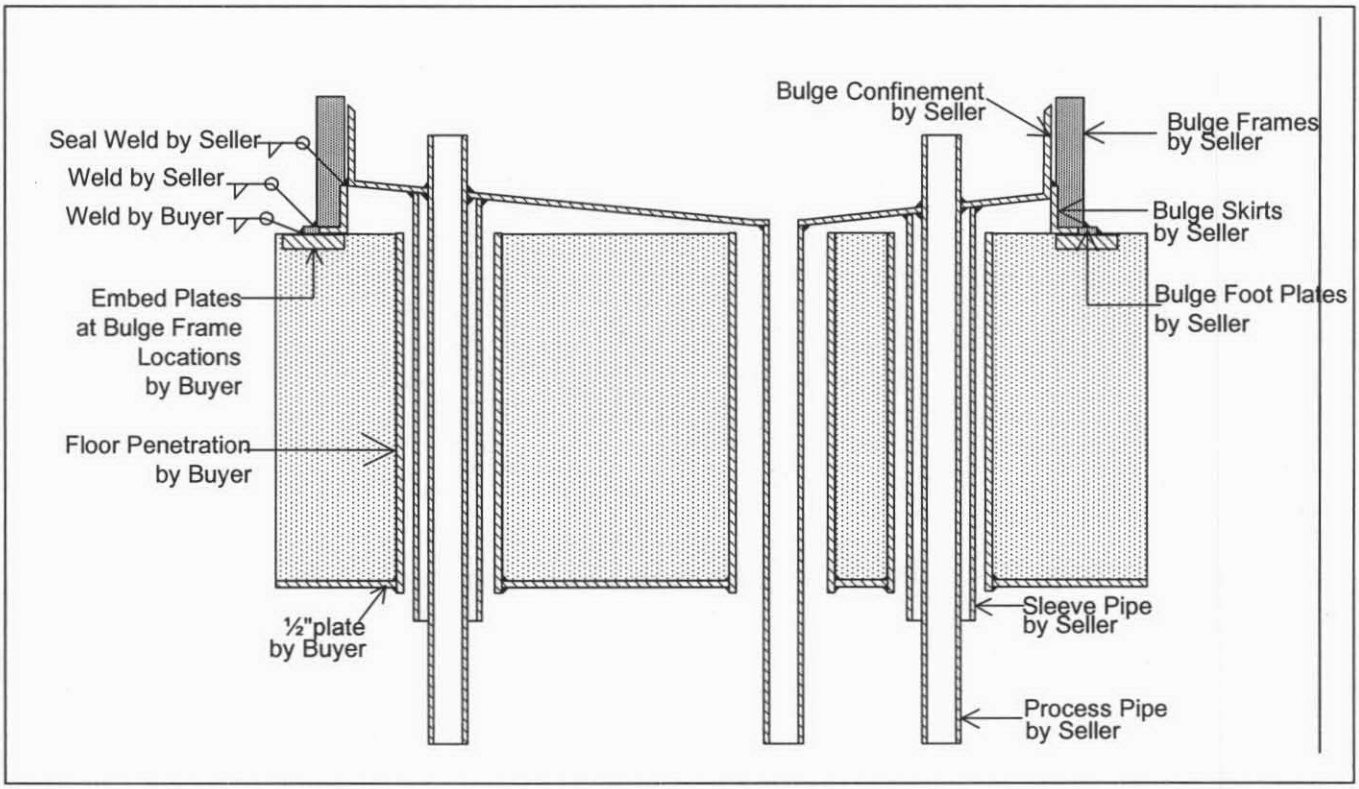

Table 1 Process Pipe and Sleeve Pipe Sizes

Process Pipe Size	Sleeve Pipe Size	Sleeve Pipe Schedule
1.0"	2.0"	40S
1.5"	3.0"	40S
2.0"	3.0"	40S
3.0"	4.0"	10S
4.0"	6.0"	10S
6.0"	8.0"	10S

Table 2 Design Nozzle Load

Pipe Size	Load	Forces lbs			Moments ft-lbs		
		Fa	Fb	Fc	Ma	Mb	Mc
1 in	Normal	76	108	108	98	168	168
	Occasional	208	240	240	282	442	442
2 in	Normal	276	388	388	430	732	732
	Occasional	764	876	876	1226	1926	1926
3 in	Normal	560	772	772	1688	2884	2884
	Occasional	1542	1754	1754	4828	7584	7584
4 in	Normal	952	1332	1332	3204	5468	5468
	Occasional	2620	3000	3000	9124	14348	14348

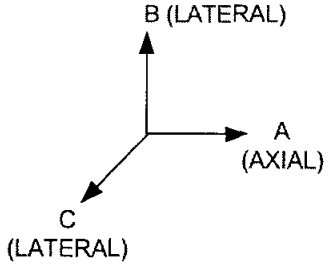

Appendix A

Implementing Standards for ANSI/AISC N690, "Specification for the Design, Fabrication, and Erection of Steel Safety-Related Structures for Nuclear Facilities"

Revision: 1994
Sponsoring Organization: American National Standards Institute/American Institute of Steel Construction

WTP Specific Tailoring

The following tailoring of ANS/AISC N690 is required for use by the WTP contractor as an Implementing Standard for structural design.

Page 22, Section Q1.5.7.1 Primary Stresses

Revise the stress limit coefficients for compression in Table Q1.5.7.1 as follows:

- 1.3 instead of 1.5 [stated in footnote (c)] in load combinations 2,5, and 6
- 1.4 instead of 1.6 in load combinations 7, 8, and 9
- 1.6 instead of 1.7 in load combination 11

Justification: These changes are made for consistency with the NRC requirements of Appendix F of section 3.8.4 of NUREG-0800 (Draft Rev. 2).

Page 22, Section Q1.5.7.1 Primary Stresses

Delete the following load combinations:

4. D + L + Eo
6. D + L + Ro + To + Eo

Justification: These load combinations are required for evaluation of an Operation Basis Earthquake (OBE). The WTP project has not identified an OBE event.

Appendix B

Implementing Standards for AISC M016, Manual of Steel Construction, Allowable Stress Design (ASD)

Revision: 9th Edition
Sponsoring Organization: American Institute of Steel Construction

WTP Specific Tailoring

The following tailoring of M016 is required for use by the WTP contractor as an implementing standard for design of structural steel for Seismic Category III SSCs.

No specific section

Load combinations for design of structural steel members utilize those identified in UBC 97, section 1612.3.

Justification: These load combinations represent the commercial requirements for allowable stress design of structural steel. Use of these load combinations will ensure compliance with the commercial design in accordance with the UBC.

No specific section

Seismic detailing requirements shall be in accordance with UBC 97, Chapter 22, Division V, section 2214, for moderate seismic risk structures.

Justification: The requirements contained in this section contain accepted industry practice for design of important commercial steel structures. Use of this section will ensure compliance with the commercial design in accordance with the UBC.

R10484286

ISSUED BY
RPP-WTP PDC

RIVER PROTECTION PROJECT – WASTE TREATMENT PLANT

ENGINEERING SPECIFICATION

FOR

Shop Applied Fusion Bonded Epoxy Coating for Underground Carbon Steel Pipe

MARK A. SCOTT
STATE OF WASHINGTON
19183
REGISTERED
PROFESSIONAL ENGINEER
02/14/05
EXPIRES 04/01/05

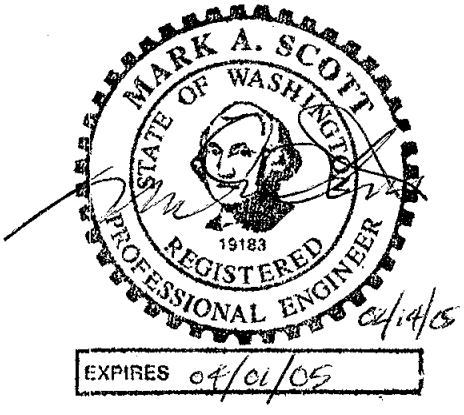

Content applicable to ALARA? ☒ **Yes** ☐ **No**

ADR No. **Rev**
N/A

NOTE: Contents of this document are Dangerous Waste Permit affecting.

Quality Designator
CM
DOE Contract No. DE-AC27-01RV14136

1	2/15/05	Issued for Permitting Use	TRCoutts	[signature]	NA	NA	[signature]
0	8/4/03	Issued for Permitting Use	TRC	LDK	NA	NA	BB for DTS
REV	**DATE**	**REASON FOR REVISION**	**BY**	**CHECK**	**REVIEW**	**QA**	**APEM/DEM**

SPECIFICATION No.	**Rev**
24590-WTP-3PS-PX04-TP001	1

Notice

Please note that source, special nuclear, and byproduct materials, as defined in the Atomic Energy Act of 1954 (AEA), are regulated at the US Department of Energy (DOE) facilities exclusively by DOE acting pursuant to its AEA authority. DOE asserts, that pursuant to the AEA, it has sole and exclusive responsibility and authority to regulate source, special nuclear, and byproduct materials at DOE-owned nuclear facilities. Information contained herein on radionuclides is provided for process description purposes only.

Contents

1 Scope 1
2 General 1
2.1 Equipment, Material, and Services Required 1
2.2 Responsibility 1
2.3 Definitions 2
2.4 Safety 3
3 Applicable Documents 4
4 Submittals 5
5 Quality Assurance 6
6 Materials 8
6.1 Piping 8
6.2 FBE Coating Materials 8
6.3 Batch Information 9
6.4 Abrasives 10
7 Application 10
7.1 General 10
7.2 Pre Surface Preparation 11
7.3 Soluble Salt Test 11
7.4 Surface Preparation 12
7.5 Phosphoric Acid Washing 13
7.6 Coating Application 14
7.7 Coating Repairs 16
7.8 Holiday Repair 17
8 Tests and Inspections 18
8.1 In Process Inspections 18
8.2 Applied Material Testing 21
9 Storage, Handling and Shipping 25
10 Quality Records 28
11 Design Changes Incorporated by Reference 29

Appendices

Appendix 1 ..... A-1

1 Scope

1.1 This Specification defines the minimum requirements for surface preparation and the furnishing, application, testing, and inspection of a shop applied fusion bonded epoxy (FBE) coatings used for external coating of underground pipe. This Specification provides for FBE coating materials that are suitable for use on pipe with an operating temperature up to 225°F. Shop applied FBE coated pipe will be installed at the RPP-WTP Project site, located in the 200 East Area of the Hanford Site in Washington State.

2 General

2.1 Equipment, Material, and Services Required

2.1.1 A Procedure Qualification Test (PQT) is required to initially qualify the SUBCONTRACTOR's/SELLER's FBE coating process. The SUBCONTRACTOR/SELLER shall set up the FBE coating line and when ready designate the PQT pipe to be tested. A PQT shall be performed once on each pipe diameter and wall thickness. The CONTRACTOR's/BUYER's representative shall be present during all PQT's. The PQT pipe shall pass all inspection and test requirements of this specification and approved procedures prior to acceptance of the process. All pipe coated prior to the PQT pipe must be stripped and recoated unless the SUBCONTRACTOR/SELLER provides acceptable inspection and test data for each pipe (production inspection and ring samples).

2.1.2 Pipe weld ends shall not be coated within Three (3) inches of the end.

2.1.3 If pipe is double jointed in the shop after FBE coating, the individual pipe joint coating shall use the same surface preparation, application and inspection criteria of this specification, except no X cut adhesion or ring sample testing is required. Previously applied adjacent FBE coating shall be protected from overheating and physical damage that might occur during FBE coating of the weld joint area. The shop weld FBE coating shall overlap 1"-2" onto the adjacent FBE coating. The overlap area shall be uniformly roughened per SSPC SP7 brush blasting prior to coating. Prior to coating the bare area of a shop welded double joint, a PQT (refer to Section 2.1.1) shall be performed on the process using a section of bare pipe that is the same diameter and wall thickness. The test application shall use the exact equipment and approved surface preparation, preheat and application procedure. The test sample shall be sufficiently large (18" long) to produce a ring sample for all laboratory testing. The test sample must pass all inspection and testing criteria contained in the specification.

2.2 Responsibility

2.2.1 The SUBCONTRACTOR/SELLER shall supply all personnel, coating materials, and an operational coating facility that includes all necessary application, inspection, and handling equipment.

2.2.2 The SUBCONTRACTOR/SELLER shall unload, inspect, and store all inbound bare pipe. Damaged or otherwise unsuitable pipe shall be identified and segregated for evaluation by the CONTRACTOR/BUYER.

2.2.3 The SUBCONTRACTOR/SELLER shall store coated pipe and load coated pipe for shipment.

2.2.4 The SUBCONTRACTOR/SELLER shall store all coating materials, perform all surface preparation, coating application, and perform inspection in accordance with this specification and CONTRACTOR/BUYER approved procedures.

2.2.5 The SUBCONTRACTOR/SELLER shall perform all inspections and tests contained in this specification at their coating plant, or at an independent laboratory when approved by the CONTRACTOR/BUYER, prior to acceptance and shipment of coated pipe.

2.2.6 The SUBCONTRACTOR/SELLER shall give the CONTRACTOR/BUYER a minimum of ten (10) working days written notice prior to the start of each production run and at least 24 hours verbal notice thereafter for all inspection witness and hold points.

2.2.7 The SUBCONTRACTOR/SELLER shall provide application and inspection documentation for all coated pipe that includes signed certificates of compliance prior to shipment of completed pipe.

2.2.8 The SUBCONTRACTOR/SELLER shall only use inspection equipment that is calibrated and controlled by a quality assurance plan, equipment calibration program as approved by the CONTRACTOR/BUYER.

2.2.9 The SUBCONTRACTOR/SELLER shall allow the CONTRACTOR's/BUYER's representative to photograph all pipe defects/damage and coating imperfections.

2.3 Definitions

2.3.1 Approved- An authenticated written statement executed by an authorized CONTRACTOR/BUYER representative.

2.3.2 Batch- All FBE powder produced in a 24-hour interval in one (1) continuous run, designated by a specific batch number assigned by the Coating Manufacturer.

2.3.3 Barber Poling- A spiral over build or under build in an applied coating.

2.3.4 Bubbling- The formation of bubbles during coating application or in a cured, or nearly cured coating film.

2.3.5 CONTRACTOR/BUYER- Means BECHTEL NATIONAL, INC. and all of its authorized representatives acting in their professional capacities.

2.3.6 ENGINEER- Refers to Owner's or CONTRACTOR/BUYER's appointed technical representatives.

2.3.7 Fish Eye- A round or oval depression in coating film with a raised point in center. Has the appearance of a fish eye.

2.3.8 Holiday- Pinhole, skips, discontinuity, or void in the applied coating film.

2.3.9 Lot- Refers to a group of pipes of the same diameter and wall thickness, which has been fabricated from the same heat of steel.

2.3.10 NIST- National Institute of Standards and Technology

2.3.11 Non-Regulated- The Special Protective Coating (SPC) quality designation for items that are **"NOT"** located in an area where radioactive material is transported, processed or stored.

2.3.12 OWNER- Means the United States Department of Energy (DOE).

2.3.13 OWNER's or CONTRACTOR's/BUYER's Representative- Same as Engineer.

2.3.14 Pinholes- Minute holes through the entire thickness of the coating film.

2.3.15 PQT- Procedure Qualification Testing (Refer to Section 2.1.1)

2.3.16 Profile- The surface roughness resulting from surface preparation by abrasive blasting (Refer to Section 7.4.4). The specific angular surface profile can be destroyed by chemical etching, power tool cleaning or other mechanical cleaning methods.

2.3.17 Regulated- The Special Protective Coating (SPC) quality designation for items that are located in an area where radioactive material is transported, processed or stored.

2.3.18 Sag- The running of freshly applied coating on a vertical surface due to being applied too thick. (Same definition for runs and drips)

2.3.19 Skips- Areas where coating was missed.

2.3.20 SUBCONTRACTOR/SELLER- Means the company, corporation, partnership, individual, or other entity to which this subcontract (purchase order) is issued, its authorized representatives, successors, and permitted assigns.

2.3.21 Tg- Glass transition temperature of the FBE coating material. A Differential Scanning Calorimeter (DSC) is used to perform Tg testing.

2.4 Safety

2.4.1 All surface preparation and coatings work shall comply with all applicable environmental and safety provisions, laws, regulations, ordinances, etc., of the city, county, state, province, or nation pertaining to the work being performed and the coating materials being used. Work being performed in the United States shall be in strict accordance with OSHA 29 CFR 1910, State, and local safety and environmental requirements.

2.4.2 The SUBCONTRACTOR/SELLER shall comply fully with OSHA Hazard Communication Standard 29 CFR 1910.1200. Material Safety Data Sheets (MSDS) shall be provided by the materials manufacturer and available at the place of application for review.

2.4.3 The Volatile Organic Compound (VOC) content of all materials shall meet Federal, State, and Local Regulatory requirements.

3 Applicable Documents

3.1 Codes and Standards

The latest applicable edition, as of the date of the purchase order, of the following codes standards and specifications form a part of this Specification.

3.1.1 American Petroleum Institute (API)

API RP-5L1 Recommended Practice for Railroad Transportation of Line Pipe

API RP-5L5 Recommended Practice for Marine Transportation of Line Pipe

3.1.2 American Society for Testing and Materials (ASTM)

ASTM D 4285 Testing for Indicating Oil or Water in Compressed Air

ASTM D 4417 Field Measurement of Surface Profile of Blast Cleaned Steel

ASTM D 4940 Test for Conductimetric Analysis of Water Soluble Ionic Contaminants of Blasting Abrasives

3.1.3 Code of Federal Regulations (CFR)/Occupational Safety and Health Act (OSHA)

29 CFR 1910 Occupational Safety and Health Standards

3.1.4 International Standards Organization (ISO)

8502-6 Preparation of Steel Substrates before Application of Paints and Related Products- Tests for Assessment of Surface Cleanliness- Part 6 Extraction of Soluble Contaminants for Analysis- the Bresle Method

3.1.5 National Association of Corrosion Engineers International (NACE)

NACE RP-0274 High Voltage Electrical Inspection of Pipeline Coatings

3.1.6 Steel Structures Painting Council (SSPC)

SSPC-SP1 Solvent Cleaning

SSPC-SP10 Near-White Blast Cleaning

SSPC-SP11 Power Tool Clean to Bare Metal

SSPC-VIS1 Visual Standards for Abrasive Blast Cleaned Steel

SSPC-PA2 Measurement of Dry Paint Thickness with Magnetic Gauges

4 Submittals

4.1 The SUBCONTRACTOR/SELLER shall submit detailed written procedures and proposed documentation forms for material receiving, marking, storage, handling, surface preparation, environmental control, application, touch-up repair, inspection of coating materials and the applied coating system, application personnel qualification and inspection personnel qualification. The final procedures shall be submitted for the CONTRACTOR's/BUYER's review and permission to proceed prior to the start of coating work.

4.1.1 The SUBCONTRACTOR's/SELLER's procedures shall identify the specific Fusion Bonded Epoxy (FBE) coating by manufacturer and catalog number and shall submit the coating manufacturer's latest published product data sheet and application instructions. Conflicts, if any, between the SUBCONTRACTOR's/SELLER's normal procedures, the coating manufacturer's recommendations, and this specification shall be brought to the attention of the CONTRACTOR for resolution. The requirements of this specification shall take precedence unless the SUBCONTRACTOR/SELLER is given a specific written waiver by the CONTRACTOR.

4.1.2 Coating System Certification- The SUBCONTRACTOR's/SELLER's proposed coating system shall be prequalified for production by testing specimens removed from plant coated pipes. The SUBCONTRACTOR/SELLER must provide documented evidence with the submittals that clearly shows the applied coating system meets or exceeds all the requirements of this specification. This evidence shall be certified independent laboratory test data, in house test data, or test data generated on previous projects that is acceptable to the CONTRACTOR.

4.1.3 The SUBCONTRACTOR/SELLER shall provide a detailed procedure for acid washing pipe that is contaminated with soluble salts such as chlorides. This procedure shall meet the requirements of Section 4.1 as a minimum. The SUBCONTRACTOR/SELLER shall detail the process such as identifying the acid manufacturer, product name and number, the acid rinse material, pipe temperature versus acid dwell time and rinse water conductivity verification. Copies of the latest published product data sheets, application instructions, and MSDS forms shall be attached as part of the procedure.

4.1.4 The SUBCONTRACTOR/SELLER shall submit original certificates of compliance for each and every batch of coating material intended for use, that confirms compliance with the requirements in Section 6.3. The certificate of compliance shall include test results provided by the coating material manufacturer or from test data provided by an outside independent testing laboratory that is acceptable to the CONTRACTOR.

4.1.5 The SUBCONTRACTOR/SELLER shall include pipe coating documentation with each shipment of coated pipe unless given a written waiver by the CONTRACTOR/BUYER. The documentation shall identify by number, each pipe included in the shipment. The SUBCONTRACTOR/SELLER shall include a Certificate of Conformance that itemizes all inspection and testing requirements and clearly state that all the pipe included in a give shipment complies with these requirements. The Certificate of Conformance shall be signed by the Quality Manager or other individual approved by the CONTRACTOR/BUYER. For pipe that will be

installed in "Regulated" areas, the SUBCONTRACTOR/SELLER shall also provide, with the shipment, copies of all the actual quality documentation for each and every pipe being shipped.

4.1.6 The SUBCONTRACTOR/SELLER shall submit a Quality Assurance Plan outline that addresses the quality elements listed in Appendix 1 (refer to Section 5.0) prior to the start of work. Prior to the start of work, the SUBCONTRACTOR/SELLER shall submit a copy of their QA Plan including copies of all procedures referenced in the QA Plan outline for review and approval by the CONTRACTOR/BUYER.

4.2 The SUBCONTRACTOR/SELLER shall supply with the quotation a list of case histories where they supplied a fusion bonded epoxy external pipe coating system. This list shall include project name; pipe size(s) and total length of project and shall include a project client contact name and phone number for verification.

5 Quality Assurance

5.1 General

5.1.1 The SUBCONTRACTOR/SELLER shall control the quality of items and services to meet the requirements of this Specification, applicable codes and standards, and other procurement documents. Prepare and maintain documentation to provide evidence of compliance with approved procedures and this Specification. A copy of the coating inspection documentation shall be included in the shipping documentation.

5.1.2 The SUBCONTRACTOR/SELLER, including any lower-tier organizations engaged by him, shall be subject to surveillance inspection by the CONTRACTOR's representative until completion or termination of the procurement. This surveillance inspection does not relieve the SUBCONTRACTOR/SELLER from the responsibility for conformance to the requirements of procurement documents and procedures.

5.1.3 The CONTRACTOR's representative shall be provided with a schedule and shall be notified of all required inspection points prior to the scheduled date for coating activities.

5.1.4 If the requirements of this Specification differ from the SUBCONTRACTOR's/SELLER's proposed work plan or procedures, the SUBCONTRACTOR/SELLER shall specifically identify and explain all differences in writing at the time of quotation. Deviations from the specified requirements must be specifically approved by the CONTRACTOR/BUYER.

5.1.5 All pre-established hold points shall be witnessed by the CONTRACTOR/BUYER unless a written waiver is issued.

5.1.6 All personnel shall receive training in the specific project coating requirements and the associated approved work procedures that are relevant to their individual work assignments.

5.1.7 SUBCONTRACTOR/SELLER coating inspectors shall have previous experience on at least one project in FBE pipe coating inspection and shall receive documented training in the specific

project coating requirements, ASTM standards and other relevant standards including the approved work procedures.

5.1.8 The SELLER shall maintain a quality assurance plan for items designated Commercial Material (CM) that addresses as a minimum the elements and implementing procedures called for in Appendix 1.

5.1.8.1 Quality Assurance Program (QAP)

5.1.8.1.1 A written QAP must be developed, implemented, and maintained.

5.1.8.1.2 The QAP must describe the organizational structure, functional responsibilities, levels of authority, and interfaces for those managing, performing, and assessing the Work.

5.1.8.1.3 The QAP must describe management processes, including planning, scheduling, and resource considerations.

5.1.8.2 Personnel Training and Qualification.

5.1.8.2.1 Personnel must be trained and qualified to ensure they are capable of performing their assigned Work.

5.1.8.2.2 Personnel must be provided continuing training to ensure that job proficiency is maintained.

5.1.8.3 Quality Improvement.

5.1.8.3.1 Processes to detect and prevent quality problems must be established and implemented.

5.1.8.3.2 Items, services, and processes that do not meet the established requirements must be identified, controlled, and corrected according to the importance of the problem and the Work affected.

5.1.8.3.3 Correction must include identifying the causes of problems and working to prevent recurrence.

5.1.8.3.4 Item characteristics, process implementation, and other quality-related information must be reviewed and the data analyzed to identify items, services, and processes needing improvement.

5.1.8.4 Documents and Records.

5.1.8.4.1 Documents must be prepared, reviewed, approved, issued, used, and revised to prescribe processes, specify requirements, or establish design.

5.1.8.4.2 Records must be specified, prepared, reviewed, approved, and maintained.

5.1.8.5 Work Processes.

5.1.8.5.1 Work must be performed to established technical standards and administrative controls using approved instructions, procedures, or other appropriate means.

5.1.8.5.2 Items must be identified and controlled to ensure their proper use.

5.1.8.5.3 Items must be maintained to prevent their damage, loss, or deterioration.

5.1.8.5.4 Equipment used for process monitoring or data collection must be calibrated and maintained.

5.1.8.6 Design.

5.1.8.6.1 Not applicable

5.1.8.7 Procurement.

5.1.8.7.1 Procured items and services must meet established requirements and perform as specified.

5.1.8.7.2 Prospective suppliers must be evaluated and selected on the basis of specified criteria.

5.1.8.7.3 Processes to ensure that approved suppliers continue to provide acceptable items and services must be established and implemented.

5.1.8.8 Inspection and Acceptance Testing.

5.1.8.8.1 Inspection and testing of specified items, services, and processes must be conducted using established acceptance and performance criteria.

5.1.8.8.2 Equipment used for inspections and tests must be calibrated and maintained.

5.1.8.9 Management Assessment.

5.1.8.9.1 Not applicable

6 Materials

6.1 Piping

6.1.1 Piping shall be supplied to the SUBCONTRACTOR/SELLER without varnish or mill lacquers. If the SUBCONTRACTOR/SELLER receives pipe from the mill with varnish or lacquer, the SUBCONTRACTOR/SELLER shall reject and segregate the pipe using a non-conformance report. All rejected pipe shall be evaluated and dispositioned by the CONTRACTOR/BUYER. Surface preparation of the affected pipe shall not proceed until agreement is reached on the removal of the mill varnish or lacquers.

6.2 FBE Coating Materials

6.2.1 Approved FBE coatings up to 140°F line operating temperature:

NAP-GARD 7-2500	Dupont Powder Coatings
NAP-GARD 7-2501	Dupont Powder Coatings

NAP-GARD 7-2502	Dupont Powder Coatings
Scotchkote 206N	Minnesota Mining & Manufacturing (3M)
Scotchkote 226N	Minnesota Mining & Manufacturing (3M)
Scotchkote 6233	Minnesota Mining & Manufacturing (3M)
Valspar D1003 LD	Valspar, Inc.
Basepox PE50-1080	BASF

Note: Patch stick materials and 100% solids catalyzed epoxy for repairs shall be products of the FBE coating manufacturer that have been reviewed and approved by the CONTRACTOR/BUYER.

6.2.2 Approved FBE coatings up to 225°F line operating temperature:

NAP-GARD 7-2501	DuPont Powder Coatings
Scotchkote 226N	Minnesota Mining & Manufacturing (3M)
Scotchkote 6233	Minnesota Mining & Manufacturing (3M)

Note: Patch stick materials and 100% solids catalyzed epoxy for repairs shall be products of the FBE coating manufacturer that have been reviewed and approved by the CONTRACTOR/BUYER.

6.2.3 All FBE coating material shall be stored in an enclosed cold storage area that is temperature and humidity controlled. The maximum storage temperature shall be 75°F and the maximum relative humidity shall be 50%. The coating manufacturer's recommendations shall be used if their temperature or humidity storage requirements are more restrictive (lower) than specified herein.

6.3 Batch Information

6.3.1 Each container of coating materials used by the SUBCONTRACTOR/SELLER shall be marked with the following information:

- The manufacturer's name
- The product designation
- Location and date of manufacturer
- The shelf life expiration date and storage temperature limits

6.3.2 The SUBCONTRACTOR/SELLER shall obtain from the fusion bond epoxy manufacturer the information listed below for each batch of powder. Standards for comparison shall also be provided for each item. This information will be used by the CONTRACTOR/BUYER to verify that no changes have been made in the epoxy formulation.

- Infrared scan of each batch of powder and, for comparison, infrared scans of at least four (4) batches of the same formulation powder previously manufactured for other projects.
- Gel time at recommended application temperature.
- Particle size distribution.

6.3.3 Coating powder shall be segregated by batch numbers during shipment, storage, and handling. Batches shall be used consecutively during coating application and shall not be mixed except when necessary to keep the coating process continuous.

6.3.4 No powder stored beyond the manufacturer's recommended shelf life expiration shall be used for coating pipe.

6.3.5 The SUBCONTRACTOR/SELLER shall maintain one-quarter (1/4) pint samples of the coating manufacturer's batches of powder, as received and reclaimed powder mix being applied. Each sample shall be identified by material, batch number, source, sampling, date and time. Samples shall be segregated in the same cold storage area as the production FBE powder.

6.3.6 All samples shall be promptly subjected to analysis by the SUBCONTRACTOR/SELLER and witnessed by the CONTRACTOR's/BUYER's Representative to assure that coating materials consistently conform to this specification, without variance in composition of formulation from the previously tested and approved materials. No batch of powder shall be applied prior to the SUBCONTRACTOR/SELLER submitting all of the required batch information to the CONTRACTOR/BUYER.

6.3.7 Materials not conforming, or with significant variance, shall not be used.

6.3.8 FBE powder and repair materials shall be stored, handled, and applied in strict accordance with the manufacturer's specifications or as directed in writing by an authorized manufacturer's representative except where the CONTRACTOR's/BUYER's specifications require otherwise.

6.3.9 Reclaimed powder shall not be used except that which has not been contaminated or has not been heat affected. Reclaimed powder must be automatically and continuously recovered and reprocessed through magnetic separators and sieves no coarser than 80 mesh U.S. Sieve Size. Reclaimed powder shall be uniformly mixed with virgin powder in an amount not exceeding 25 percent reclaim in the mix and shall be applied through a separate spray system. The reclaim powder mix shall be applied over 100% virgin powder and shall be confined to the top 25% of the total FBE film thickness.

6.4 Abrasives

6.4.1 Abrasives for blast cleaning shall be clean, free of oil or contaminants, and dry. The particle size shall be capable of producing the specified angular surface profile (minimum 50% steel grit in original mix and all adds shall be 100% grit (Refer to Sections 7.4.4 and 7.4.5). All reclaimed abrasives shall be tested for water-soluble contaminants and conductivity. Conductivity shall not exceed 1000 microsiemens when tested in accordance with ASTM D 4940.

7 Application

7.1 General

7.1.1 It shall be the SUBCONTRACTOR's/SELLER's responsibility to stop the surface preparation and coating process at any time when conditions exist that will adversely affect the coating quality. The CONTRACTOR's/BUYER's representative may reject any process or material not proven by the SUBCONTRACTOR/SELLER to be in compliance with this specification.

7.1.2 Proper equipment for the handling, unloading, and temporary storage of bare pipe shall be used to avoid any damage to bare pipe and pipe ends, or obliteration of necessary pipe markings.

7.2 Pre Surface Preparation

7.2.1 Pipe shall be visually inspected for dents, bevel damage or other damage. The SUBCONTRACTOR/SELLER shall isolate all damaged pipe in a hold area and issue a nonconformance report. Nonconformance reports shall be evaluated and dispositoned by the CONTRACTOR/BUYER. Corrective Action shall be taken and each corrected pipe shall be re-inspected prior to accepting the pipe for surface preparation. Pipe damaged beyond repair shall be removed from the site as soon as practical.

7.2.2 All debris inside pipe shall be removed. All oil, grease, dirt, crayon marks, soapstone marks or other contamination shall be removed from the exterior and interior of pipe by solvent cleaning with a non-oily solvent in accordance with SSPC SP1 or by detergent washing or steam cleaning. No residue that will affect adhesion shall be left on the surface. Interior pipe cleanliness is important when using re-circulated abrasive system.

7.2.3 Pipe that has a surface temperature less than 5°F above the dew point temperature shall be visibly dry and preheated prior to abrasive blasting.

7.2.4 Pipe ends shall be protected from damage and suitably sealed to minimize abrasive from entering the interior of the pipe during external abrasive blasting. On pipe that has received an internal lining the pipe ends shall be sealed sufficiently to prevent damage to the lining during the surface preparation and coating application.

7.3 Soluble Salt Test

7.3.1 At the start of the coating work, the first ten (10) pipe then every twentieth (20th.) pipe shall be tested for soluble chloride salt contamination. This test frequency may be reduced or even eliminated at some later date after full review by the CONTRACTOR/BUYER. The test shall be run in accordance with the following silver nitrate testing procedure for determining the presence of soluble chloride salts on the steel.

7.3.1.1 After the pre-surface preparation required in Section 7.2, apply several drops of distilled water to the surface of the pipe after wire brushing to remove the heavy loose rust. Attach a ten (10) ml Bresle sampler onto the test area in accordance with Section 5.0 of ISO 8502-6 to keep the surface wet for a minimum of ten (10) minutes. Use a ten (10) ml syringe to inject, remove, and re-inject the same demineralized/distilled water several times as a flushing action. The Bresle sampler patch shall be installed in a diamond orientation on the side of the pipe, not the top or bottom of pipe, to facilitate air removal.

7.3.1.2 Transfer the ten (10) ml of demineralized/distilled water from the Bresle sampler to a clean test tube or other small clean glass vessel using the ten (10) ml syringe.

7.3.1.3 Add five (5) drops of a 10% silver nitrate solution and shake. A milky precipitate indicates the presence of halogen salts or chlorides on the pipe surface.

7.3.1.4 Document test results in accordance with Section 6 of ISO 8502-6.

7.3.2 If the results of the test in Section 7.3.1 are negative, no milky precipitate observed in good lighting, the normal surface preparation may proceed as specified in Section 7.4 and phosphoric acid washing per Section 7.5 will not be a requirement of this specification.

7.3.3 If the results of the test in Section 7.3.1 are positive, a milky precipitate observed in good lighting, the pipe shall be abrasive blasted in accordance with Section 7.4, then phosphoric acid washed in accordance with Section 7.5.

7.3.4 The SUBCONTRACTOR/SELLER shall submit a detailed procedure for salt contamination testing and for its subsequent removal. Once a contaminated pipe is found, twenty consecutive additional pipes shall be found free of salt contamination prior to returning to the five (5) percent inspection criteria. Reducing the test frequency or eliminating the test may be considered by the CONTRACTOR/BUYER based on initial and production test results.

7.3.5 Alternate salt contamination tests may be considered if the SUBCONTRACTOR/SELLER submits detailed procedures for review and possible acceptance by the CONTRACTOR/BUYER.

7.4 Surface Preparation

7.4.1 All external surfaces to be coated shall be pre-cleaned per SSPC SP 1 where oil, grease, and other contaminants are present.

7.4.2 The pipe shall be preheated prior to blast cleaning to a temperature at least 5°F above the dew point or higher when recommended by the coating manufacturer. Preheating shall be performed in a uniform manner to avoid distortion or hot spots.

7.4.3 Pipe shall be handled so as to prevent any damage to bevels. Ends shall be closed to prevent any abrasives and/or foreign material from entering the pipe's interior during blasting. Any abrasive and/or foreign material entering the pipe shall be removed before and after subsequent coating. Special precautions shall be taken to protect internal linings from damage if the pipe was internally lined prior to undertaking external coating work. Preventative measures shall be addressed in detail in the procedures required by Section 4.1.

7.4.4 All external surfaces to be coated shall be cleaned to a near-white metal finish in accordance with Specification SSPC-SP10 as verified through the use of SSPC VIS1. All parameters for abrasive cleaning of steel pipe surfaces shall be adjusted as necessary to obtain an angular surface profile. Particle size distribution of the grit employed shall be continually controlled by screening to ensure that the surface profile after cleaning shall have a nominal height of 2.5 mils, with a minimum height of 2.0 mils, and a maximum height of 3.9 mils as measured by Testex Press-O-Film replication tape in accordance with ASTM D 4417. All cleaning shall be done in such a manner that beveled ends and any internal coating will not be damaged.

7.4.5 For consistent surface finish, a stabilized working abrasive mix shall be maintained by frequent small additions of new grit abrasive commensurate with consumption; infrequent large additions shall be avoided.

7.4.6 The working abrasive mix shall be maintained clean of contaminants by continuous effective operations of cleaning machine scalping and air wash separators. Re-circulated grit used for abrasive cleaning shall be tested for the presence of oil by immersing a sample in water and

checking for oil flotation. Tests shall be made at the start of blasting, every four (4) hours thereafter, and at the end of blasting. If oil is evident, the contaminated abrasive shall be cleaned or replaced. All surfaces blasted since the last successful test shall be completely re-blasted using clean abrasive.

7.4.7 The blast cleaned surface shall not be contaminated with dirt, dust, metal particles, oil, water, or any other foreign material from any source, including, but not limited to, pipe transport systems, processing equipment components or tools, or airborne contaminants, nor shall the pipe surface or its profile be scarred or burnished.

7.4.8 After abrasive cleaning and before coating, the surface to be coated shall be carefully inspected under adequate lighting for metal defects, which may affect coating application, i.e., scabs, slivers, gouges or laminations. The SUBCONTRACTOR/SELLER shall be responsible for the repair of any defects, which can be repaired by filing or grinding, and or for restoring the profile at the locations of such repairs when the size of the repair exceeds four (4) square inches. The tools and manner employed to remove metal defects shall not burnish or destroy the profile or contaminate the surface. If the SUBCONTRACTOR/SELLER sees that metal repairs to uncoated pipe will require extensive metal work, welding or removal of parent metal in excess of that allowed by the pipe material specification, the affected pipe shall be set aside and the CONTRACTOR/BUYER shall be notified for disposition.

7.4.9 Pneumatic tools shall not be used on pipe unless they are fitted with effective oil and water traps on the exhaust air.

7.4.10 If the profile is destroyed over a single area greater than 25 square inches or over a total area greater than 0.5% of a pipe, the pipe shall be re-blasted at no expense to the CONTRACTOR/BUYER.

7.4.11 In instances where large amounts of body wall are removed, remaining body wall will be checked with a suitable ultrasonic thickness gauge or micrometer to ensure that the area remains within API specifications, specific pipe material specifications and/or any special wall thickness tolerances listed in the Material Requisition (MR).

7.4.12 Uncoated pipe requiring further attention or inspection shall be identified and segregated for further inspection at no additional cost to the CONTRACTOR/BUYER.

7.5 Phosphoric Acid Washing

7.5.1 If the pipe tested positive for halogen/chloride salts as described in Section 7.3.1, the following procedure shall be followed to remove salts by phosphoric acid washing after abrasive blast cleaning.

7.5.1.1 After blast cleaning, surface inspection and grinding, the pipe temperature shall be maintained between 80°F/ and 110°F for acid cleaning.

7.5.1.2 Prior to entry into the acid wash, the pipe temperature shall be measured in three (3) places to ensure it meets the above temperature requirements.

7.5.1.3 Acid cleaning is performed by uniformly spraying the external surface of the pipe with a 5° percent (by wt.) phosphoric acid solution.

7.5.1.4 The acid shall be rinsed with water at a minimum nozzle pressure of 2500 psi prior to heating the pipe for coating application. The water shall be demineralized with a maximum conductivity of five (5) micromhos/cm (0.5 milisiemens per meter). If the conductivity of the rinse water exceeds this level, the salt contamination test shall be repeated on each pipe that is acid washed and rinsed to verify that the rinse water has not re-contaminated the pipe.

7.5.1.5 The minimum time between acid application and water rinse shall be as follows:

Five (5) percent Phosphoric Acid Solution

Pipe Temperature (°F)	(°C)	Dwell Time (Seconds)
80	27	52
85	29	45
90	32	36
95	35	33
100	38	28
105	41	24
110	43	21
115	46	21
120	49	21
125	52	21

Note: In no case shall the applied acid solution dry anywhere on the pipe prior to entering the rinse cabinet.

7.5.1.6 When acid washing of the blasted pipe is required needed to pass the coating system pre-qualification tests, the acid washing shall be performed immediately prior to the application of the epoxy coating. The acid wash shall be performed in accordance with an approved procedure that follows the actual method used during Procedure Qualification Testing (PQT) that is required by this specification.

7.6 Coating Application

7.6.1 Heating Pipe

7.6.1.1 Total elapsed time between cleaning and coating of the cleaned surface shall be kept to a minimum and in no case shall be more than three (3) hours or the pipe shall be completely recleaned prior to coating. Oxidation of the steel prior to coating, in the form of "blooming" or other apparent oxide formation is not acceptable. The formation of visible oxides shall cause the pipe to be re-cleaned at the SUBCONTRACTOR's/SELLER's expense prior to coating.

7.6.1.2 Before coating, the pipe shall be heated so that the surface temperature is within the application temperature range recommended by the coating manufacturer when it reaches the coating application area. The surface temperature during coating application shall not be lower than that required for complete melt, flow-out, wetting of the pipe surface and fusion; nor shall it be higher than that at which optimum polymerization occurs without premature gelation before

completion of fusion, flow-out and wetting. Post-application cure temperature and time shall not be less than that required for full cure of the applied coating.

7.6.1.3 The furnace atmosphere shall be such that the clean pipe surfaces are not contaminated.

7.6.1.4 The temperature of the pipe shall be monitored continuously by means of contact pyrometers and/or optical pyrometers. For accurate control of surface temperature, the pipe shall be periodically checked with "Tempilstik" heat-indicating crayons or other suitable devices, provided that the amount of material deposited and the length of marks will be limited to that required for accurate temperature control.

7.6.1.5 All temperature readings shall be recorded. Pipe heated above 500°F shall be replaced at the SUBCONTRACTOR's/SELLER's expense.

7.6.2 FBE Coating

7.6.2.1 The fusion bonded epoxy coating shall be applied in accordance with approved procedures (Section 4.1), which include the coating manufacturer's latest published application instructions. The SUBCONTRACTOR/SELLER must have a copy of these procedures at the time where the coating is being applied. Any deviation from the SUBCONTRACTOR's/SELLER's approved application procedures shall be documented and submitted to the CONTRACTOR's/BUYER's representative for review and approval prior to use. The Coating Manufacturer's specification for the application and curing temperature and curing time of the specified Fused Epoxy Powder System shall become a part of this specification. It is the intention of this provision that the SUBCONTRACTOR/SELLER will be required to make applications of the coating materials in accordance with the Coating Manufacturer's published instructions, and to work with the Coating Manufacturer and/or the Coating Manufacturer's Representative to eliminate any difficulties that might arise in the application of the coating.

7.6.2.2 The pipe shall be coated while its surface temperature is within the manufacturer's recommended temperature limits.

7.6.2.3 Unless otherwise stated, the coating shall be applied by electrostatic spray or fog chamber to produce a uniform coating thickness.

7.6.2.3.1 The dry film thickness requirements of FBE coatings applied to pipe shall be no single spot reading less than 14 mils with 16 mils as the nominal dry film thickness. Pipe having a coating thickness between 20 mils and 24 mils must have "DO NOT BEND" written in permanent marker in large letters on the external FBE coated surface in three (3) locations along each pipe. Every effort must be made to keep the coating thickness within 14 mils to 18 mils. No more than five (5) percent of the pipe shall be accepted with a coating thickness in the range of 20-24 mils. Any pipe beyond the five (5) percent quantity shall be stripped and re-coated at the SUBCONTRACTOR's/SELLER's expense. Allowances will be made for initial startup. Coated items with thick nesses above 24 mils are rejected and shall be stripped and coated unless a written variance is issued by the CONTRACTOR/BUYER for each occurrence. Refer to Section 6.2 of this specification for the approved FBE coating materials.

7.6.2.4 The Dry Film Thickness (DFT) of girth weld coating on double-jointed pipe shall be 18-24 mils with a maximum of 30 mils. All double-jointed pipe where dry film thickness is ≥20 mils shall be labeled, "DO NOT BEND".

7.6.2.5 For Field Welds areas, the finished coating shall have a cutback of four to five (4-5) inches. The length of cutback for shop welds shall extend two (2) inches minimum and five (5) inches maximum, measured from the end of the pipe. If coating materials accumulate within one (1) inch of the pipe end, the cutback area shall be buffed free of coating material. Metal cutback rings used to keep coatings off those surfaces shall be kept clean. Masking tape may be used with the approval of the CONTRACTOR/BUYER. Tape and tape residue shall be removed after the FBE coating is cured.

7.6.2.6 Powder spray system air shall be clean and dry as verified in accordance with Section 8.1.8.

7.6.2.7 Powder batches shall not be mixed together except as necessary to keep the coating process continuous. The SUBCONTRACTOR/SELLER shall record all batch numbers used along with other information necessary for the CONTRACTOR/BUYER to relate the powder batch to the pipe on which it was applied.

7.6.2.8 Manufacturer's recommendations for full curing shall be followed. The curing reaction of the coating must be completed prior to entering the cool down tunnel. The temperature of the pipe exiting the cool down line onto the inspection platform shall not exceed 150°F/ for inspection and repair.

7.6.2.9 The cured coating shall be of uniform color and gloss and shall be free of bubbling, pinholes, holidays, skips, fish eyes, sags or runs, drips, barber poling and any other irregularities.

7.6.2.10 Where pipe were internally lined prior to external coating, the interior lining shall be inspected to make sure the lining was not damaged during the external cleaning and coating processes. Pipe with damaged internal lining shall be set-aside for the CONTRACTOR's/BUYER's review and evaluation. Any repairs required for the internal lining shall be carried out by the SUBCONTRACTOR/SELLER, at his expense, using CONTRACTOR/BUYER approved procedures.

7.6.2.11 During application, curing and handling, the coating shall not be physically damaged, nor shall it be contaminated with any foreign material including (without limitation) dirt, metal particles, oil, water, coating debris, excess powder or powder drips, whether airborne or from application equipment or enclosures, cutback rings or pipe handling mechanisms.

7.7 Coating Repairs

7.7.1 Each coated pipe leaving the Applicator's premises shall be free of holidays and visual coating defects.

7.7.1.1 Rejected Coatings

7.7.1.1.1 All rejected coatings (those coated pipe that fail to pass the criteria listed in Section 8.1 and 8.2), which cannot be repaired within the framework of this Specification, shall be completely removed from the entire pipe. The pipe surface shall be re-prepared and re-

coated by the SUBCONTRACTOR/SELLER in conformance with this Specification at no additional expense to the CONTRACTOR/BUYER.

7.8 Holiday Repair

7.8.1 All coating defects disclosed by visual or holiday detector inspection shall be repaired at no additional expense to the CONTRACTOR/BUYER. For all holiday repairs where repairs are allowed by the CONTRACTOR/BUYER, the following procedure shall be followed:

7.8.1.1 For small pinholes or pinhole sized metal sliver holidays where repairs by the patching stick method are approved by the CONTRACTOR/BUYER, the surface shall be thoroughly cleaned and abraded in accordance with SSPC SP11. The patch stick materials used shall be approved by the CONTRACTOR/BUYER and be compatible with the FBE coating being employed. Prior to repairs, the area surrounding the defect shall be abraded utilizing 80 grit carborundum cloth and/or a coarse file to promote patch adhesion. Using a small torch, the surface shall be heated until the patch stick melts when touched to the surface. Avoid charring the surface. The patch stick shall then be rubbed over the heated surface, building up a smooth puddle of patching compound over the abraded area while heat from the torch continues to be applied. A minimum thickness of 25 mils is required. The touch-up material shall overlap the undamaged coating by a minimum of one (1) inch. Heating time and temperature must be adequate to ensure that repairs are fully cured and pass the applicable inspections and tests required in Section 7.8.1.4.

7.8.1.2 Where larger areas of damaged coating are to be repaired, 1/8" in largest dimension, and where the use of a patch stick is not practical, a 100 percent solids liquid epoxy compound (supplied by the pipe coating material manufacturer) shall be applied to the area upon CONTRACTOR/BUYER approval. The pipe to be repaired shall be cleaned to remove all dirt and damaged or disbonded coating using CONTRACTOR/BUYER accepted procedures. The edges of the original coating shall be "feathered out" around the area to be coated and all dust wiped off before applying the patch coating. This type repair coating shall be applied by spatula. The patch coating shall be applied in accordance with the Manufacturer's recommendations to a minimum thickness of 25 mils. The touch-up material shall overlap the undamaged coating by a minimum of one (1) inch.

7.8.1.3 The freshly-patch-coated areas shall be allowed to cure fully according to the coating manufacturer's specifications prior to inspecting and handling.

7.8.1.4 After curing, all patches shall be visually inspected and holiday tested with a wand electrode of fine brass whiskers at a voltage of not less than 2100 DCV and tested for adhesion by knife lifting. The patch shall be holiday-free and shall not disbond when probed around the edge with a sharp knife.

8 Tests and Inspections

8.1 In Process Inspections

8.1.1 The SUBCONTRACTOR/SELLER shall have the full responsibility for the coating application quality in accordance with this Specification and shall be responsible for stopping operations when conditions develop which will adversely affect the quality of the completed work. All work shall be subject to the CONTRACTOR's/BUYER's inspection surveillance.

8.1.2 In addition to the ten (10) day written notice prior to the start of work the SUBCONTRACTOR/SELLER shall provide the CONTRACTOR's/BUYER's representative a written time schedule of all witness and hold points 24 hours in advance of the work activities.

8.1.3 The CONTRACTOR's/BUYER's representative shall be the final authority on the acceptability of surface preparation and coating application. Any coating which, in the CONTRACTOR's/BUYER's representative's judgment, has not been applied in conformance with this Specification shall be rejected.

8.1.4 The CONTRACTOR's/BUYER's representative shall have access to each part of the process (e.g., coating material storage/handling, surface preparation, coating application, testing and pipe handling and storage) and shall have the right and opportunity to witness any of the quality control tests and/or to perform such tests himself on a random sampling basis.

8.1.5 The SUBCONTRACTOR/SELLER shall furnish the necessary testing and inspection instruments, properly calibrated and maintained. Such equipment shall be available for use by the CONTRACTOR/BUYER in conducting surveillance of work.

8.1.6 The SUBCONTRACTOR/SELLER shall halt the coating of pipe and make alterations or corrections to the process/procedures, to correct repetitive faults found in the work that result in failure of the work to conform to this Specification.

8.1.7 Any defects disclosed during inspection shall be reinspected after correction.

8.1.8 Prior to using compressed air, the quality of the air downstream of the separator shall be tested in accordance with the requirements of ASTM D 4285 by blowing the air onto a clean white blotter or cloth for two (2) minutes to check for any contamination, oil, or moisture. This test shall be performed at the beginning and end of each shift and at least every four (4) hours thereafter. The test shall also be made after any interruption of the air compressor operation or as required by the CONTRACTOR/BUYER. The air shall be used only if the test indicates no visible contamination, oil, or moisture. If contaminants are evident, the equipment deficiencies shall be corrected and the air stream shall be retested. Separators shall be bled continuously. All lines shall be tested individually prior to use. Surfaces which are determined to have been blown down or blasted with contaminated air, shall be reblasted with clean air and abrasive. Coatings that have been determined to have been applied using contaminated air shall be removed and reapplied using clean air.

8.1.9 The inspection points shall be established as follows as a minimum:

- Prior to the start of work

- Immediately following the surface preparation
- Immediately prior to the coating application
- Following the application and curing
- Final inspection and sign-off, in accordance with the project requirements

8.1.10 The SUBCONTRACTOR/SELLER shall keep the records indicated below, and submit these records to the CONTRACTOR/BUYER daily for verification to the CONTRACTOR's/BUYER's satisfaction.

Coating/Inspection Step	Required Frequency
1. Salt Contamination	Until ten (10) consecutive pipes are found to be salt free and then every 20th pipe (See Section 7.3).
2. Surface Profile	Check three (3) locations on two (2) pipes (Refer to Section 8.1.11.2) a. At the beginning of each shift and every four (4) hours throughout the shift. b. Whenever any change in abrasive type or mix or in blast pressure is made.

Coating/Inspection Step	Required Frequency
3. Thickness	Twelve measurements per pipe (See Section 8.1.13.2).
4. Repaired Holidays	100% inspected. Record number of repaired holidays per pipe (See Section 7.8).

8.1.11 Surface Preparation

8.1.11.1 Surface cleanliness shall be judged against both written and visual (SSPC VIS1-89) standards. Surface cleanliness must be inspected on a continuous basis.

8.1.11.2 The surface profile shall be verified in accordance with the requirements of ASTM D 4417 with Testex Press-O-Film at the beginning of every eight (8) hour shift and every four (4) hours throughout the shift (Refer to Section 7.4.4). The profile shall be determined at three (3) different places on the pipe . The readings shall be recorded. Profiles shall also be checked if abrasive material, abrasive mix, or blast pressure is changed, and after grinding of slivers.

8.1.11.3 Verify pipe is free of salt contamination in accordance with Section 7.3.1.

8.1.11.4 Recirculated shot and grit shall be checked for the presence of oil in accordance with Section 7.4.6.

8.1.11.5 Grease-free chalk shall be used to mark areas which do not meet the specified requirements.

8.1.12 Preheat Temperatures for FBE coating

8.1.12.1 Optical pyrometers and/or contact thermometers/pyrometers shall be used to assure correct pipe temperature as recommended by the FBE coating manufacturer. Tempilstiks may be used to check accuracy of the pyrometers and/or thermometers, but their use must be minimized. (Refer to Section 7.6.1.4)

8.1.13 Dry Film Thickness

8.1.13.1 Dry coating thickness shall be measured with a magnetic film thickness gage such as an Elektro-Physik Mikrotest magnetic film thickness gauge or CONTRACTOR/BUYER-approved equal. The gage shall have a zero to 40 mil working range and shall check and record calibration accuracy at the start of each shift against the NIST (National Institute of Standards and Technology) Coating Thickness Calibration Standards for Non-magnetic Coating of Steel or CONTRACTOR/BUYER approved alternative standards. The calibration standards shall be in the 14 mil to 25 mil range, unless otherwise specified.

8.1.13.2 A minimum of eight random dry film thickness measurements shall be taken on each pipe joint up to forty feet long. Three (3) sets of readings shall be taken evenly spaced along the length of each pipe joint. All dry film thickness readings shall be performed in accordance with SSPC PA2 using the spot reading frequency specified herein.

8.1.13.3 Any pipe with a measured thickness below the minimum or above the maximum listed in Sections 7.6.2.3.1 & 7.6.2.4 shall be rejected. These items shall be re-cleaned and re-coated at the SUBCONTRACTOR's/SELLER's expense.

8.1.14 Visual Inspection of coated pipe

8.1.14.1 The pipe shall be visually inspected for bluing, lifted pipe scabs, and discoloration from burning or rusting of the substrate prior to coating. The coated pipe shall be visually inspected for defects under adequate lighting and shall be free of voids, loss of adhesion, bubbling, excess powder mounds, barber poling, peeling and lifted pipe scabs/slivers.

8.1.14.2 If the SUBCONTRACTOR/SELLER fails to promptly correct causes of regularly recurring holidays or other coating defects, the pipe coating may be rejected for any number of such regularly holidays or defects.

8.1.14.3 Coated pipe requiring additional inspection shall be set aside for such inspection at no additional expense to the CONTRACTOR/BUYER.

8.1.15 Holiday Detection

8.1.15.1 All coated pipe shall be 100% inspected for holidays using a non-pulsating spiral coil or brush operated according to the requirements of NACE Recommended Practice RP-02-74. Use 150 volts/mil or as recommended by the coating manufacturer. In no case shall the voltage be below 2100 DCV. The holiday detector shall have an audible alarm.

8.1.15.2 The holiday detector voltage shall be checked and recorded at least every hour with an accurate DC voltmeter. The holiday detector shall be adjusted as necessary after recording its voltage or during noticeable changes in handling.

8.1.15.3 The detector electrode shall be in direct contact with the entire surface of the coating being inspected. There shall be no gaps in the electrode or separations between the electrode and the surface of the coating, including the surfaces on either side of the seam of the pipe.

8.1.15.4 The travel rate of the detector's electrode shall not exceed one (1) foot/second and shall not be allowed to remain stationary while the power is on. Refer to NACE RP-02-74 to determine rate of travel.

8.1.15.5 All holidays and other coating defects, including without limitation those described in Section 8.1.14, shall be marked with a grease-free marker and the number and nature of holidays and coating defects in each pipe recorded.

8.1.15.6 Pipe with more than one (1) holiday per 20 square feet shall be rejected.

8.1.15.7 Rejected pipe shall be handled as described in Section 7.7.1.1. Non-rejected coated pipe that have defects shall be repaired per this Specification and approved procedures.

8.2 Applied Material Testing

8.2.1 The SUBCONTRACTOR/SELLER shall perform all the tests listed in this Section. The CONTRACTOR's/BUYER's representative may be present during the tests. Test results must be made available within 72 hours of taking the sample. The SUBCONTRACTOR/SELLER shall make such processing adjustments as indicated to be required by results of these tests, including coating material application and curing temperatures and times. No pipe lot shall be accepted before the test results from the representative samples are known. If any test results do not meet the requirements of this Specification, the CONTRACTOR/BUYER will specify additional samples to be tested at the SUBCONTRACTOR's/SELLER's expense. Also, the CONTRACTOR/BUYER reserves the right to test additional samples at the SUBCONTRACTOR's/SELLER's expense.

8.2.1.1 Sample Frequency

8.2.1.1.1 From the first pipe for each pipe diameter and wall thickness and from one (1) corresponding pipe on per shift basis (max. 12 hrs.) thereafter, the SUBCONTRACTOR/SELLER shall cut an 18 inch wide ring sample from the end of the pipe for coating tests. The cut pipe ends shall be re-beveled and all burnt coating removed. The sample shall be labeled with the coating date, pipe number, powder batch number, and powder used. In the event any or all of the required tests fail, additional ring samples may be required to reduce the size of rejectable lot. The size of the rejectable lot may be determined by identifying the characteristic causing the coating to fail the test or tests and identifying other pipe with that characteristic in common. The characteristics causing test failure may include powder batch, production line problems, pipe surface condition and other identifiable deviations.

8.2.1.2 Bend Tests

8.2.1.2.1 The ability of the coating applied on pipe to resist cracking, tearing, disbondment, or other mechanical damage as a result of bending shall be determined by bending a coated bend strap (8"x1"x wall thickness) in a four (4) point modular bending jig or mandrel bending jig. The coating shall not disbond from the pipe, delaminate, crack or break when bent at five (5) degrees per pipe diameter length (4.35 percent elongation) at 32°F and 1.75 degrees per pipe diameter length (1.52 percent elongation) at 0°F.

8.2.1.3 Differential Scanning Calorimeter (DSC) Analysis

8.2.1.3.1 The SUBCONTRACTOR/SELLER shall perform a DSC analysis on each ring sample. Delta Tg shall be less than 5°F for the coating to be considered fully cured.

8.2.1.3.2 If analysis shows any sample to be partially cured, it must be determined which pipes of the lot were not properly cured. Those pipes not properly cured will be rejected and reworked.

8.2.1.4 Adhesion Test

8.2.1.4.1 At production start up, after production interruptions, at the start of using a new batch of powder, and once every hour or 20 pipes (whichever is more frequent), the adhesion of the coating will be determined at one (1) location on the pipe. After three (3) consecutive production tests have been acceptable, the frequency may be reduced to once every two (2) hours or 50 pipes, whichever is sooner.

8.2.1.4.2 Using an Exacto Knife make two (2) one (1) inch long incisions through to the metal substrate to form an X.

8.2.1.4.3 At the intersection of the X, attempts shall be made to force the coating from the steel substrate with the knife point. Refusal of the coating to peel constitutes a pass. Partial or complete adhesion failure between the coating and the metal substrate constitutes a failure.

8.2.1.5 Foam Structure and Pipe/Coating Interface Contamination Tests

8.2.1.5.1 Using a bend strap, use a sharp knife or Exacto Knife and make a cut to the metal in the middle of the sample from side to side. Cool the bend sample using dry ice until the sample temperature is 0°F or lower. Bend the sample until the FBE coating disbonds from the steel strap on both sides of the cut. Break off the two disbonded FBE coating samples in as large a sample as possible. Use these two samples to perform the Foam Structure and the coating interface contamination test.

8.2.1.5.2 Foam Structure Test- Cool one of the two disbonded FBE coating samples with dry ice. While the FBE coating sample is very cold "snap" it into two or three pieces. The breaks shall be a brittle fracture and not a tear or semi-tear. Using a high powered light and a 30x-40x microscope compare the degree of foaming or porosity in the cross section of the cured FBE sample with Figure 1. The extent of foaming at the coating to pipe interface and throughout the film will be determined. The degree of foaming, through film and interface, shall be evaluated in terms of the ratings shown below. Report the rating most closely

representing the degree of foaming or porosity in the cured FBE chip. A rating of one (1) is best and a rating of five (5) is worst. Foaming shall not exceed #3. A #4 or #5 rating is a reject.

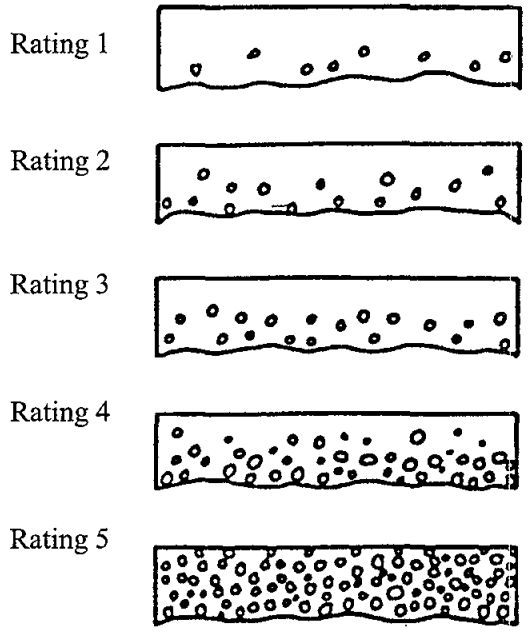

Figure 1

8.2.1.5.3 Interface Contamination Test- The percentage of contamination at the coating to pipe interface shall be determined on any of the disbonded FBE coating samples from 8.2.1.5. The sample shall be evaluated at 40X magnification using a microscope. Apply a copper sulfate solution to the backside of the FBE coating sample (the side that was in contact with the steel surface) to highlight the steel dust contamination at the interface. The percentage of contamination shall be determined visually using photographic examples with a 100 point reticule as a reference. The percentage of surface contamination shall under no circumstance exceed 25 percent.

8.2.1.5.4 If either the foam structure or the interfacial contamination test fails to meet the specification requirements then two additional bend strap samples from the same ring sample shall be tested and both must pass. If one or both fail to meet the specification requirements then another ring sample from a different pipe from the same production shift shall be prepared and tested. If these samples exceed the specification requirements then a systematic investigation shall be performed to identify the scope of the problem and the quantity or reject coated pipe. Also, the blasting and coating line shall be evaluated to determine how the deficiency can be corrected.

8.2.1.6 Cathodic Disbondment Test

8.2.1.6.1 A cathodic disbondment test shall be conducted on the samples as follows:

8.2.1.6.1.1 A four (4) inch x four (4) inch plate is cut from the production-coated ring sample. The coated test plate shall be verified holiday free using 2100 DCV per Section 8.1.15. A 3.2

mm holiday is drilled through the coating to the steel. A three (3) inch diameter PVC cell is centered over the intentional holiday and fixed to the coated surface using a silicone sealant.

8.2.1.6.1.2 The cell is filled with three (3) % NaCl electrolyte and platinum wire anode is inserted below the electrolyte level. A 3.5 DC voltage (reference saturated calomel) is impressed and the entire test plate and apparatus are maintained at 150°F for 24 hours. To maintain a uniform heat distribution on the curved test panel, a sand bed shall be used in conjunction with a hot plate. Add a minimum of 300 ml of the NaCl solution and mark the solution level on the cylinder. The solution level shall be checked periodically and the level maintained by adding distilled water.

8.2.1.6.1.3 At test completion, make four (4) evenly spaced radial cuts through the coating that extend 20 mm from the center of the holiday as shown in Figure 2. The amount of coating removed in the "V" areas are evaluated and expressed in millimeters radius (mmr), as measured from the holiday edge to the area where well-bonded coating exists. The coating shall cathodically disbond 13 mmr or less from the edge of the intentional holiday. The test sample shall be air cooled to 68°F ± 5°F and shall be evaluated within one (1) hour after removal from the heat.

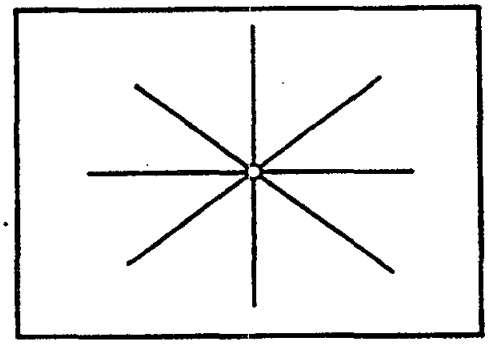

Figure 2
Example of Radial Cuts Through the Coating

8.2.1.7 Moisture Permeation Test

8.2.1.7.1 Samples of coated pipe shall be tested to determine the coating's resistance to moisture permeation by immersing them in 150°F tap water for 24 hours. The coating shall then be visually examined for the presence and size of blisters, cracking, or wrinkling. These visual defects shall be reported..

8.2.1.7.2 While the sample is still warm, use a sharp knife to scribe a rectangle (approximately 1" x 1/2") through the coating to the substrate. Air cool the sample to 70 ± 5°F.

8.2.1.7.3 Evaluation of adhesion shall be made using a knife blade aligned almost parallel to the substrate. Within one (1) hour after removal from the hot water, use the knife to try and pry up the coating inside the corner of the scribed rectangle using a levering action. Continue

inserting the knife and levering under the edge of the coating within the rectangle until the coating demonstrates a definite resistance to the levering action. Rate the coating adhesion as follows:

#1	Coating cannot be removed cleanly
#2	Less than 50% of coating in a rectangle can be removed
#3	More than 50% of the coating in the rectangle can be removed but the coating chips and demonstrates a definite resistance to the levering action
#4	The coating can be easily removed from the rectangle in strips or large chips
#5	The coating can be completely removed from the rectangle as a single piece.

8.2.1.7.4 Coating adhesion shall meet a rating of #1 or #2.

9 Storage, Handling and Shipping

9.1 Storage and Handling

9.1.1 The SUBCONTRACTOR/SELLER shall be solely responsible for the condition of the pipe from the time it is received until after it has been delivered to the CONTRACTOR/BUYER.

9.1.2 All booms, hooks, clamps, forks, supports, and skids used in handling or storing coated pipe shall be designed and maintained in such a manner as to prevent any damage to the pipe or to the coating and shall be approved by the CONTRACTOR's/BUYER's representative. Each hook shall be aluminum, brass or other material that will not cause damage to the beveled pipe ends.

9.1.3 The SUBCONTRACTOR/SELLER shall inspect pipe upon receipt for damage such as dents, flat ends, end caps, and bevel damage. Any visible damage observed at this point shall be noted on the inbound pipe tally.

9.1.4 Uncoated pipe shall be racked in snug rows and tiers with a minimum space between pipes in such a manner that will prevent damage to the pipes.

9.1.5 Pipes shall be provided with end caps by the pipe manufacturer. End caps that are found to be damaged or missing during inspection on the inbound pipe tally shall be replaced. End caps that are damaged after entering the coating yard and before delivery to the point of destination shall be replaced at the SUBCONTRACTOR's/SELLER's cost.

9.1.6 Identification markings (from the inside of the pipe or those removed from the exterior pipe surface by blast cleaning) shall be legibly stenciled with paint on the exterior surface of the pipe on the cured epoxy powder coating approximately twelve inches from one end of each pipe. The identification markings shall include the following as a minimum:

- Pipe Manufacturer's Name or Mark
- Outside Diameter in English Units
- Wall Thickness in English Units
- Pipe Number
- Date Coated

- Company Name of Applicator
- Symbol Indicating Grade
- Pipe Material Requisition (MR)Number
- Powder Used (Including batch)
- Country of Origin (if other than U.S.)
- Weight (in pounds and kilos)

9.1.7 The coated pipe shall not be racked until the coating has cooled to 120°F.

9.1.8 All coated pipes shall be stored on padded racks or polyethylene-sheathed sand berms not less than six (6) inches off the ground until time for shipment. The supports shall be properly spaced and leveled to support the pipe without damage. The bottom row of pipe shall be restrained to prevent the pipe from rolling. Non-compressible rubber pads 1/2 inch thick, or hoops 5/8 inch nylon rope shall be used to separate the pipe for yard transportation and storage. A minimum of three (3) rubber pads or four (4) nylon rope hoops shall be used for single lengths of pipe and a minimum of six (6) rubber pads or six (6) nylon rope hoops shall be used for double lengths of pipe. One (1) separator shall be placed near each end of the pipe and the remainder proportionally spaced along the pipe.

9.1.9 The CONTRACTOR's/BUYER's representative will have authority to stop any storage procedure or means of transport from the yard, if in his opinion there is a possibility of damage to the coating because of improper procedures.

9.1.10 Any pipe damaged by the SUBCONTRACTOR/SELLER shall be repaired in accordance with the CONTRACTOR's/BUYER's pipe specifications and applicable API Standards at the SUBCONTRACTOR's/SELLER's expense. Only repair procedures acceptable to the CONTRACTOR/BUYER shall be used. Pipe damaged beyond permissible repair shall be replaced by and become the property of the SUBCONTRACTOR/SELLER.

9.2 Shipping (General)

9.2.1 Pipe shall be transported from the coating yard by truck, rail, barge, or ship as specified in the contract order. Pipe shall be shipped using sufficient dunnage to adequately protect the pipe and its external coating.

9.2.2 Dunnage shall be made from hardwood and conform to the following dimensions. Any deviations from this Specification require the CONTRACTOR's/BUYER's approval prior to use.

9.2.3 Chocks shall be four (4) inches wide by six (6) inches high. Chocks shall be cut at an angle to cause maximum contact of the entire angled surface to the pipe. In no cases shall plastic chocks be permitted. Nails used to secure the chocks shall be driven perpendicular to the plane of the angle side of the chock securing the chock to the bolster. Nails will be driven outside the pipe contact area and must be countersunk a minimum of 1/8".

9.2.4 Bolsters shall be a minimum of two (2) inches by six (6) inches by eight (8) feet in length. The maximum length of any bolster shall be eight (8) feet six (6) inches. Four (4) bolsters per layer of single length pipe and eight (8) bolster per layer of double jointed pipe per load shall be used and shall be padded with 1/4" thick rubber with securing nails placed outside the pipe contact.

9.3 Truck Shipments

9.3.1 Truck shipments shall be made on trailers adequate for pipe hauling. The trailer shall be of sufficient length to eliminate excessive overhang. Pole trailers shall not be used. All trucks and trailers used for hauling coated pipe shall be equipped with fenders and gravel guards to prevent road gravel or slag impact damage to the coating.

9.3.2 Pipe shipped by truck shall be loaded in compliance with existing highway shipping standards and regulations.

9.3.3 All sills, skids, bolsters, standards and separators shall be padded with minimum 1/4 inch thick rubber pads or equivalent, with the securing nails placed outside the pipe contact area.

9.3.4 Each single length pipe shall be separated from each adjacent pipe by a minimum of three (3) 1/2 inch thick non-compressible rubber pads or four (4) 5/8 to 3/4 inch thick rings of nylon rope placed on each end and proportionally spaced along the length of the pipe. A minimum of six (6) separators shall be used for each double jointed pipe.

9.3.5 Nylon straps shall be used on all shipments of pipe and/or coated pipe to prevent movement. Chains may not be used at anytime.

9.3.6 The nylon straps are to be brought up over the pipe and fastened down.

9.3.7 Rubber padding or other suitable padding shall be used to protect the pipe and/or coating from the tie down buckles.

9.4 Rail Shipments

9.4.1 Rail shipments shall be loaded in accordance with the latest edition of API-RP5L1 and the following:

9.4.1.1 All foreign material shall be removed from cars; no part of the car shall be nearer to the pipe than two (2) inches/55 mm.

9.4.1.2 Each pipe shall be separated and tied down as stated in Sections 9.1 and 9.2 above.

9.5 Marine Shipments

9.5.1 Marine shipments shall be loaded in accordance with the latest edition of API-R5L5, and the following:

9.5.1.1 The pipe is to be stored in a manner and in a location to prevent damage to it and/or its coating. The pipe's location should be such that the pipe shall be undisturbed until it is unloaded.

9.5.1.2 The bottom row of pipe shall be cushioned against the deck with strip wood placed perpendicular to the pipe. The wood shall be evenly distributed to make a uniform support. The top tier of pipe shall be held down to stop rotation in transit.

9.5.1.3 No cargo of any nature shall be stored on top of the pipe. Pipe shall not be stored against the sloping sides of the ship's hold.

9.5.1.4 Each pipe shall be separated as stated in Sections 9.1 and 9.2.

10 Quality Records

10.1 A record of all material test reports (individual batches of FBE powder, phosphoric acid, abrasive, rinse water quality, silver nitrate, etc.) for materials used for a given Lot of FBE coated pipe, shall be included as part of the shipping documentation package.

10.2 A record of all required daily production test results for pre-surface preparation, chloride contamination testing, environmental conditions, compressed air cleanness, surface preparation and profile, acid wash, steel defects, FBE coating, water quench, etc. shall be included as part of the shipping documentation package.

10.3 A record of all required daily production test results on each FBE coated pipe, such as dry film thickness, holiday testing, visual defects including X cut knife adhesion tests shall be included as part of the shipping documentation package.

10.4 A record of all required daily laboratory test results for each Lot of FBE coated pipe shall be included as part of the shipping documentation.

10.5 All quality documentation shall be available for review by the CONTRACTOR's/BUYER's representative within 24 hours from the time it is generated.

10.6 SUBCONTRACTOR/SELLER documentation forms. proposed for use, shall be provided as part of the procedures submitted to the CONTRACTOR/BUYER for review. (Refer to Section 4.1)

10.7 All original documentation generated during the coating work shall be submitted within 30 days after the last item in the order is completed. The documentation package shall have a cover page that identifies the project, contract number and the report issue date. There shall be a letter of certification signed by management certifies the work performed complied with all the contract performance and quality requirements. The submittal package shall contain a table of contents and organized sections that contain the original documents generated during the work.

11 Design Changes Incorporated by Reference

11.1 The following is a listing of design changes that are identified by reference and do not require modification to the specification.

Design Change Document

*24590-WTP-SDDR-PROC-01-0001

*24590-WTP-SDDR-PROC-01-0002

*24590-WTP-SDDR-PROC-01-0003

*24590-WTP-SDDR-PROC-01-0004

* 24590-WTP-SDDR-PROC-03-0307

* 24590-WTP-SDDR-PROC-03-0268

* 24590-WTP-SDDR-PROC-03-0269

*24590-WTP-SDDR-PROC-03-0270

* 24590-WTP-SDDR-PROC-03-0271

* Denotes a new entry for this revision of the specification

APPENDIX 1

Supplier Quality Assurance Program Requirements Data Sheet

DOE ORDER 414.1A REQUIREMENTS

The following marked QA Program Elements of DOE ORDER 414.1A apply and are subject to BUYER evaluation and verification

DOE O 414.1A	N/A	PROGRAM ELEMENTS	SUPPLIER DOCUMENT AND PARAGRAPH REFERENCES TO BE COMPLETED BY THE SUPPLIER
X		PROGRAM	
X		PERSONNEL TRAINING & QUALIFICATION	
X		QUALITY IMPROVEMENT	
X		DOCUMENTS & RECORDS	
X		WORK PROCESSES	
	X	DESIGN	Coating manufacturers and coating applicators- "Design" Special Protective Coatings provided by 24590-WTP-3PS-PX04-T0001
X		PROCUREMENT	
X		INSPECTION & ACCEPTANCE TESTING	
	X	MANAGEMENT ASSESSMENT	
	X	INDEPENDENT ASSESSMENT	

SIGNATURE OF SUPPLIER REPRESENTATIVE _____

Attachment 51 – Appendix 7.9

WTP Common Material Selection Documentation

The following drawings have been incorporated into Appendix 7.9 and can be viewed at the Ecology Richland Office. **New drawings are in bold lettering.**

Drawing/Document Number	**Description**
24590-WTP-PER-M-02-001, Rev 3	Material Selections for Building Secondary Containment/Leak Detection
24590-WTP-PER-M-02-002, Rev 1	Materials for Ancillary Equipment
RESERVED	RESERVED

R10111743

DOCUMENT INFORMATION

The following information is required when submitting a document to PDC for issuance.	**Correspondence (CCN) No:** _____ **Document No:** 24590-WTP-PER-M-02-001 **Rev:** 3

Project Information (Check Applicable Box)

☐ Balance of Facilities ☐ HLW Vitrification ☐ Analytical Laboratory ☒ Across all areas

☐ Pretreatment ☐ LAW Vitrification ☐ External Interfaces

Document is applicable to ALARA (as determined by the originator)? ☐ Yes ☒ No

Applicability to ALARA means that the item has the potential to affect doses, contamination levels, or releases to the environment. (See 24590-WTP-GPP-SRAD-002, *Application of ALARA in the Design Process*, sections 4.1 and 4.2 for more information.)

Subject code(s): _____ (for correspondence only)

ACTION ITEM INFORMATION (for correspondence other than meeting minutes)

Commitments: ☐ Yes ☒ No (if yes, brief description below)

_____

_____

Tracked by RITS

Commitment Owed to: _____ Due Date: _____

Actionee(s)			

Tracked by PADC

Written Response Required: ☐ Yes ☐ No

Owed to: _____ Due Date: _____

This correspondence closes action on Correspondence Number _____

☐ Subcontract Files _____ Copies

☐ PAAA Coordinator MS14-4B

☐ Contains SENSITIVE Information

Additional Departmental Info (to facilitate keyword search)

Internal ☐ DNFSB ☐ ORP ☐ OSR ☐ WDOE ☐ WDOH ☐ Other _____

Special Instructions for PDC

5/14/03 Processed Data Entry ☐ Copied QA ☐ Scanned ☐ Filed

Document title: **Material Selections for Building Secondary Containment/Leak Detection**

ISSUED BY RPP-WTP PDC
INIT DATE 8/14/03

Contract number:	DE-AC27-01RV14136
Department:	Mechanical Systems
Author(s):	HM Krafft
Principal author signature:	
Document number:	24590-WTP-PER-M-02-001, Rev 3
Checked by:	Sharok Khabir
Checker signature:	
Date of issue:	8/14/03
Issue status:	Issued for Permitting Use
Approved by:	SW Vail
Approver's position:	Materials/Metallurgy & Compliance Supervisor
Approver signature:	

STEVEN WAKEMAN VAIL
STATE OF WASHINGTON
39250
REGISTERED
PROFESSIONAL ENGINEER

8/14/03

EXPIRES: 12/07/03

This bound document contains a total of 9 sheets

River Protection Project
Waste Treatment Plant
2435 Stevens Center Place
Richland, WA 99352
United States of America
Tel: 509 371 3500

Notice

Please note that source, special nuclear, and byproduct materials, as defined in the Atomic Energy Act of 1954 (AEA), are regulated at the US Department of Energy (DOE) facilities exclusively by DOE acting pursuant to its AEA authority. DOE asserts, that pursuant to the AEA, it has sole and exclusive responsibility and authority to regulate source, special nuclear, and byproduct materials at DOE-owned nuclear facilities. Information contained herein on radionuclides is provided for process description purposes only.

History Sheet

Rev	Date	Reason for revision	Revised by
0	7-1-02	Initial issue	JR Divine
1	7-11-02	Added text	JR Divine
2	8-8-02	Issued for Permitting Use	JR Divine
3	8-14-03	Clarified transfer lines source term, added AEA statement and re-Issued for Permitting Use	HM Krafft

Contents

1 Introduction 1
2 Applicable Documents 1
3 Description 1
3.1 Sumps 2
3.2 Liners 2
3.3 Leak Detection 3
4 Conclusions 4

1 Introduction

The Washington Administrative Code, Chapter 173-303 WAC, *Dangerous Waste Regulations*, requires the use of leak detection and secondary containment for systems containing dangerous waste. This report discusses the potential use of coatings and stainless steel for use as secondary containment in the Balance of Facility (BOF) as well as the High Level Waste (HLW), Low Activity Waste (LAW), Pretreatment (PTF), and Laboratory (LAB) facilities. It also describes the probes used in the sumps for leak detection.

Any fluids released to the secondary containment will flow to the sumps. Sumps that are always dry except for off-normal situations will be constructed of ASTM A240 type 304L or a more corrosion resistant alloy. More resistant alloys include ASTM A240 type 316L stainless steel or ASTM B688 UNS N08367 or ASTM B625 UNS N08926, 6-percent molybdenum (6% Mo) alloy. Sumps that are always wet will be a 6% Mo alloy. The fluid level in the sumps will be monitored by bubbler or radar level detectors.

2 Applicable Documents

None

3 Description

After describing selected system features and operating concerns, a brief description of the corrosion factors for sumps, cell liners, and leak detectors is discussed.

System Features

- Secondary containments shall be remotely flushed as needed. All cells with secondary containment are provided with wash rings that can flush the cell with 8-percent sodium hydroxide, 12-percent nitric acid, or process water. The flush solution flows to sumps from which it is removed.
- Sumps that are normally dry will be flushed and drained. Wet sumps maintain a liquid level.
- Stainless steel cell liners are used in inaccessible areas or in areas where a potential spill of waste would require a higher level of corrosion protection. Coatings may be used in areas where repair maintenance can be performed.
- The portion of the bubbler tube (leak detection) in the sump will be constructed of the same material as the sump. If process conditions require it, a more corrosion resistant alloy will be used.
- The bubblers are fed with dry process air or instrument air, dew point of 40 degrees below 0 Fahrenheit (-40 °F).
- Airflow rates are sufficiently small that aerosols formed by the air bubbling through the liquid and that could deposit on the probe surfaces will not form.
- The bubblers are continuously operated at a pressure greater than or equal to the external pressure so that liquid does not rise in the bubbler.
- Depending on the design, the radar level detector wave-guide may or may not contact the liquid. Any portion of the wave-guide below the top of the sump will be constructed of the same material as the sump. If process conditions require it, a more corrosion resistant alloy will be used.

Considerations:

Several factors must be considered in specifying the materials of construction. These include temperature, lifetime dose, expected chemistry including pH (the negative logarithm of the hydrogen ion activity), and time of exposure.

Temperature - Most regions in the 5 facilities will operate in the 75 °F to 125 °F range with an upper limit of 150 °F. In exceptional regions, associated with the melters, air temperatures can significantly exceed 300 °F. Melter cell liner temperatures will be maintained at significantly less than 300 °F due to the cell ventilation systems

Radiation – The 40 year integrated gamma radiation dose within the PTF are estimated to be as high as 26,000,000,000 rad, though most locations are less. The highest expected 40-year dose rate in waste transfer lines is between the PTF and the HLW facility. The dose rate for the PTF to HLW facility transfer line is estimated to be less than 60,000,000 rad based on a bounding assumption that the transfer line is full of waste at all times.

pH - The pH within process vessels can vary depending on the operation. Process solutions range from 50 -percent sodium hydroxide to about 40 -percent nitric acid though no one vessel is expected to be exposed to the entire range of pH values.

Time of Exposure – Time of exposure will affect the degree of uniform corrosion that can occur. Because pitting and cracking generally have some degree of incubation period, short exposures to potentially corrosive conditions may not have an effect.

3.1 Sumps

Sumps are either dry sumps or wet sumps. Dry sumps may be constructed of 304L or more corrosion resistant alloys, including 316L stainless steel and 6% Mo alloy. The wet sumps will normally have some liquid present. Because of uncertainties about the chemistry of the solutions in the sump, evaporation rates, and the effects at the liquid/air interface, the wet sumps will be a 6% Mo alloy.

3.2 Liners

3.2.1 Coatings

Both mechanical and chemical factors are important in the selection of special protective coatings. The mechanical factors include foot traffic, fork lift operation, and dropping of or installation of equipment. The chemical effects include, but are not limited to, pH, radiation, and temperature.

Novolac type epoxies are available that can withstand temperatures to about 300 °F, lifetime doses to about 200,000,000 rad, and concentrated caustic or nitric acid for several hours.

The combined effects of pH, temperature, and radiation on coatings are not well defined but would be expected to reduce the useful life. No situation is expected where temperatures above 300 °F will be combined with pH extremes.

A shorter exposure of coatings to any of above conditions will result in a longer coating life. Exceeding any of the above conditions requires access for maintenance of the coating.

To determine the level of protection needed, several leak options are evaluated:

High pH solutions.
All of the suggested coatings are subject to failure if there is extended exposure to strong caustic. Surfaces should be flushed within about 2 days.

Acid leaks in the absence of waste.
Coatings can be used if they can be washed within about 2 days otherwise they could be destroyed by long-term exposure (greater than several days depending on the concentration) to nitric acid. Where failure of the coating could lead to exposure of concrete to acid solutions, coatings are not recommended.

Water leaks in the absence of waste.
Coatings are acceptable, except in high radiation areas where human access for performing coating maintenance is not possible.

Acid or water (pH < 12) leak with waste present.
As noted above for acid leaks, coatings are not recommended except where maintenance is feasible. pH values near or less than about 0 are of primary concern.

3.2.2 Metal liners

To determine the level of protection needed, several leak options are evaluated:

High pH solutions.
304L is resistant to caustic solutions.

Acid leaks in the absence of waste.
304L was specified as the liner material. The corrosion resistance of 304L is very good for nitric acid.

Water leaks in the absence of waste.
In the absence of waste, no failure of the 304L liner is expected.

Acid or water (pH < 12) leak with waste present.
With 304L, washing within a day of the leak is preferred. However, as the temperature of any leaking fluid on the liner will be much lower than that in the pipe/vessel, no accelerated corrosion of the liner is anticipated. Further, because in a typical fabrication, the weld is always considered to be more prone to defects that result in leaks, vacuum box testing will be conducted on liner plate welds as a precautionary measure to ensure weld integrity and eliminate potential leakage to the concrete.

3.3 Leak Detection

Should leaks occur, the fluids will flow to the sumps where probes using radar level detectors or bubblers will detect the liquid in the sump. Bubbler tips will frequently be exposed to the solution, whereas the radar wave-guides are not expected to be exposed. Factors considered in reviewing the probe performance are:

- external environment
- internal environment
- immersion environment
- tip environment

The external environment of both probe types above the liquid level and the internal environment of the wave-guides is air which is benign. The internal environment for bubblers is dry air and is extremely benign. The wetted portion of immersed probes will be in the same solution as the sump in which it is located. Due to the expected evaporation of the solution by the dry air, deposits may form on the bubbler tip. The rest of the immersed portion of the bubbler will be as resistive to corrosion as the sump in which the bubbler is located because it is made of the same material as the sump. If process conditions require it, a more corrosion resistant alloy will be used.

3.3.1 Bubblers

Because the instrument air or process air inside the bubbler is very dry, the solution at the bubbler tip will dry and any soluble material will precipitate onto the bubbler tip. Even under these conditions the uniform corrosion for the tip will be small, estimated at less than 1 mil (0.001 inch) per year. Cracking is not likely even if chloride builds up because the stresses at the tip are expected to be small and the material is the same as the sump; even if cracks occur, a cracked tip will not affect the bubbler operation.

On the other hand, pitting is possible. Pits, however, will be small and plugged with corrosion products. Little if any air loss will occur. Additionally, because the bubblers sense a pressure differential and not an absolute pressure, the loss of air is not critical.

3.3.2 Radar Wave-Guides

The wave-guide is not expected to be wetted. However, if it is, the duration should be sufficiently small that combined with the material of construction, no uniform corrosion is expected. Cracking and pitting are not likely, and the effect of small cracks or cracks in the wave-guides is unknown.

Radar wave-guides are not expected to corrode significantly if immersed. Any portion of the wave-guide below the top of the sump will be constructed of the same material as the sump or, if process conditions require it, a more corrosion resistant alloy. Nevertheless, immersion of the wave-guide is not recommended.

4 Conclusions

- Cell liners are required as a secondary containment.
- Coatings are not recommended as process cell liners unless they can be maintained.
- 304L is acceptable for cell liners because it is compatible with the expected temperature and radiation limits. It is susceptible to corrosion under certain conditions but they will be counteracted by remote flushing.
- Alloys more corrosion resistant than 304L are not needed for the cell liners.
- Dry sumps will be constructed of 304L, 316L stainless steel, or 6% Mo alloy. The remaining sumps are constructed of a 6% Mo alloy.
- Because the immersed portions of the bubbler will be the same material of construction as the containing sump, the corrosion, in general, will be the same for both. However, because deposits are

likely at the bubbler tip, the bubbler may pit at the tip. No significant effect on bubbler operation is anticipated.

- If process conditions will result in the immersion of the radar wave-guides, a more corrosion resistant alloy such as 6% Mo is used.

MASTER DISTRIBUTION SCHEDULE

Document Number	Rev
24590_WTP-PER-M-02-001	3

Insert rows as necessary using tab key ↑

Name	MSIN	Controlled	Uncontrolled	Size						Comments
				8 ½ x 11 (A)	11 x 17 (B)	Drawings			As Is	
						C	D	E		
Vail, Steven	MS4-B2		X						X	
Hoffmann, Mark	MS4-B2		X						X	
Cornelison, Chad	MS4-C1		X						X	
Markillie, Jeff	MS4-C1		X						X	
Erlandson, Brad	MS4-C1		X						X	

Approver Steve Vail *Print Name* — Steve Vail *Signature* — 8/14/03 *Date*

R10272823

ISSUED BY
RPP-WTP PDC
INIT DATE

Document title: **Materials for Ancillary Equipment**

Contract number: DE-AC27-01RV14136

Department: Engineering

Author(s): JR Divine

Principal author signature:

Document number: 24590-WTP-PER-M-02-002, Rev 1

Checked by: AP Rangus

Checker signature: A. P. Rangus

Date of issue: 3/19/04

Issue status: Issued for Permitting Use

Approved by: SW Vail

Approver's position: Supervisor, Systems and Materials

Approver signature:

STEVEN WAKEMAN VAIL
STATE OF WASHINGTON
39250
REGISTERED
PROFESSIONAL ENGINEER
3/19/04

EXPIRES 12/07/05

This bound document contains a total of 5 sheets

Signature 3/19/04
Date

River Protection Project
Waste Treatment Plant
2435 Stevens Center Ply
Richland, WA 99352
United States of America
Tel: 509 371 3500
Fax: 509 371 3504

History Sheet

Rev	Date	Reason for revision	Revised by
0	8/22/02	Issued for Permitting Use	JR Divine
1	3/19/04	Issued for Permitting Use	JR Divine

Please note that source, special nuclear and byproduct materials, as defined in the Atomic Energy Act of 1954 (AEA), are regulated at the U.S. Department of Energy (DOE) facilities exclusively by DOE acting pursuant to its AEA authority. DOE asserts, that pursuant to the AEA, it has sole and exclusive responsibility and authority to regulate source, special nuclear, and byproduct materials at DOE-owned nuclear facilities. Information contained herein on radionuclides is provided for process description purposes only.

Contents

1 Introduction 1
2 Applicable Documents 1
3 Description 1

1 Introduction

The Washington Administrative Code, 173-303-640(3)(a), states that the tank system and ancillary equipment shall be compatible with the waste. This report addresses material selection for corrosion protection of WTP ancillary waste containment equipment. External corrosion protection of pipe in direct contact with the soil or water is not addressed in this report.

The term "ancillary" equipment includes piping, fittings, flanges, valves, and pumps through which the solution passes or comes in contact with during the operation. The definition as used here does not include gaskets, seals, or other non-metallic components.

2 Applicable Documents

None.

3 Description

The waste containment piping and ancillary equipment material selection is based on the corrosion evaluations which are performed for vessels, tanks, columns, evaporators, ultrafilters, filtration units, lutepots, breakpots (herein after all are referred to as vessels). These evaluations include reviews of:

- General Corrosion,
- Pitting Corrosion,
- End Grain Corrosion,
- Stress Corrosion Cracking,
- Crevice Corrosion,
- Corrosion at Welds,
- Microbiologically Induced Corrosion (MIC),
- Fatigue/Corrosion Fatigue,
- Vapor Phase Corrosion,
- Erosion,
- Galling,
- Fretting/Wear,
- Galvanic Corrosion,
- Cavitation, and
- Creep.

Because of the detailed corrosion analysis done on each vessel and the large number of pipes entering or leaving each vessel, a conservative approach has been used. This approach is to construct ancillary equipment downstream of a source vessel of the same material as the vessel

and with the same or greater corrosion allowance unless the service seen in the downstream line warrants a different material, corrosion allowance, or other modification. The exception to this philosophy could be offgas lines or liquid pipelines exposed to the same waste environment as the vessel but for shorter periods of times and, on the average, at the same or lower temperatures and which may not have the same requirements as the vessel. Under these conditions, a less resistant material or lower corrosion allowance would be acceptable.

Drain piping that drains to vessels is typically 316L stainless steel. This is based on their limited use and flushing after use.

Exceptions are made for extremely long lines that will be flushed and, if needed, flushed with alkaline solutions after each use. Exceptions can also be made if the component is maintainable. In those cases, the alloy selected may be slightly less corrosion resistant but fully qualified for its use and expected life. If the restrictions given for an exemption cannot be met or the specified alloy is not available, then a more corrosion resistant alloy may be used. An additional exception is made for steam ejectors located in the vessel. In this case, because the steam line is at about 352°F and the downstream line is subject to an elevated temperature, they are required to be the more corrosion resistant Hastelloy C-22.

In cases where the chemical compatibility is not in question but erosion is potentially more severe, a larger corrosion/erosion allowance will be specified. Erosion is generally not a major concern even in regions with high solids loadings when the velocities are less than twelve feet per second. Typically, if the solids content is above two weight percent, or contains glass formers, a higher erosion allowance or hard-facing is used.

Due to the factors identified above, several materials are being used for piping:

- 304L stainless steel – air, water, reagents, nitric acid, waste, some vent systems,
- 316L stainless steel – water, dilute nitric acid, waste, vent systems,
- 6% Mo alloy – waste,
- C-22 alloy – waste, and
- Ti-2 – canister decontamination

As noted above, selection criteria are documented in the Corrosion Evaluations.

Summary

1. Ancillary equipment shall be fabricated from the same material, or better, as the source vessel.
2. The corrosion allowance used for the ancillary equipment shall be the same as that of the source vessel unless the service seen in the downstream line warrants a different material, corrosion allowance, or other modification.
3. Any exceptions to (1 or 2) shall be evaluated by the materials group and may result in additional operating restrictions.

Attachment 51 – Appendix 7.11

WTP Documents Applicable to All Areas IQRPE Reports

The following drawings have been incorporated into Appendix 7.11 and can be viewed at the Ecology Richland Office. **New drawings are in bold lettering.**

Drawing/Document	Description
24590-CM-HC4-HXYG-00138-02-00056, Rev 00A	IQRPE Integrity Assessment Report for WTP Underground Transfer Lines & Ancillary Equipment
RESERVED	RESERVED

R10617470

STRUCTURAL INTEGRITY ASSESSMENT OF THE WASTE TREATMENT PLANT (WTP) UNDERGROUND TRANSFER LINES AND ANCILLARY EQUIPMENT

Bechtel National, Inc. Job No. 24590

SUPPLIER DOCUMENT STATUS

1. [X] **Work may proceed.**
2. [ ] **Revise and resubmit. Work may proceed subject to resolution of indicated comments.**
3. [ ] **Revise and resubmit. Work may not proceed.**
4. [ ] **Review not required. Work may proceed.**

Permission to proceed does not constitute acceptance or approval of design details, calculations, analyses, test methods, or materials developed or selected by the supplier and does not relieve supplier from full compliance with contractual obligations.

REVIEWED

G-321 Document Category N/A
[From Supplement A to G-321-E (E) or G-321-V (V), as applicable, or "N/A" if SSRS is used]

Supersedes BNI Document No. N/A Rev. ____
[When applicable]

Accepted by DC Pflueger DC Pflueger 8/19/05
Print Name Signature Date

Released by N/A
[When applicable] Print Name Signature Date

416 GP&S 7-03

Please note that source, special nuclear and byproduct materials, as defined in the Atomic Energy Act of 1954 (AEA), are regulated at the U.S. Department of Energy (DOE) facilities exclusively by DOE acting pursuant to its AEA authority. DOE asserts, that pursuant to the AEA, it has sole and exclusive responsibility and authority to regulate source, special nuclear, and byproduct materials at DOE-owned nuclear facilities. Information contained herein on radionuclides is provided for process description purposes only.

24590-CM-HC4-HXYG-00138-02-00056 Rev 00A

IQRPE REVIEW
OF
THE WASTE TREATMENT PLANT (WTP) UNDERGROUND TRANSFER LINES AND ANCILLARY EQUIPMENT

"I, Tarlok Hundal have reviewed, and certified a portion of the design of a new tank system or component located at the Hanford Waste Treatment Plant, owned/operated by Department of Energy, Office of River Protection, Richland, Washington. My duties were independent review of the current design for the Waste Treatment Plant (WTP) Underground Transfer Lines and Ancillary Equipment as required by the Washington Administrative Code, *Dangerous Waste Regulations*, Section WAC-173-303-640(3) (a) through (g) applicable components."

"I certify under penalty of law that I have personally examined and am familiar with the information submitted in this document and all attachments and that, based on my inquiry of those individuals immediately responsible for obtaining the information, I believe that the information is true, accurate, and complete. I am aware that there are significant penalties for submitting false information, including the possibility of fine and imprisonment."

The documentation reviewed indicates that the design fully satisfies the requirements of the WAC.

The attached review is sixteen pages numbered one (1) through sixteen (16), plus Attachment A (Pages A1 through A-5) and Attachment B (Pages B-1 through B-7).

Signature

8-19-05
Date

Scope	Scope of this Integrity Assessment	This Integrity Assessment addresses the WTP Underground Transfer Lines (also termed herein as ancillary equipment), shown on P&ID drawings 24590-PTF-M6-PWD-P0057 and -P0058. It considers the secondary containment and corrosion assessment for each of these transfer lines. These inter-facility transfer lines are direct buried double-walled pipe lines. These transfer lines are associated with nine WTP process systems, namely; FRP, HCP, HLP, LCP, LVP, PWD, RLD, TCP, and TLP. The following two reports (Attachments A and B) by Independent Corrosion Expert (ICE), are part of this assessment: Attachment A Corrosion Integrity Assessment of Waste Transfer Pipelines in the Hanford Waste Treatment Plant, (Page A-1 through A-5). Attachment B Buried Pipeline and Ancillary Equipment Vs. Soil Environment Compatibility Report for the River Protection Project - Waste Treatment Plant, (Page B-1 through B-7).
Summary of Assessment		For each item of "Information Assessed" (i.e., Criteria) on the following pages, the items listed under "Source of Information" were reviewed and found to furnish adequate design requirements and controls to ensure that the design fully satisfies the requirements of Washington Administrative Code, WAC-173-303-640, *Dangerous Waste Regulations* for Tank Systems.

References	Material Requisitions and Specifications.	Material Requisitions (MRs): 24590-QL-MRA-PS02-00008, Rev. 4, Pipe Spool Fabrication-Coaxial Steel Pipe and Fittings (QL) –including Material Requisition Supplement 24590-QL-MRA-PS02-00008-S0011 to Rev. 4 of MR; 24590-CM-FMR-PB08-00001, Rev. 0, Shop Fabricated Double Contained Fiberglass Pipe Spools. Specifications: The following Specifications with their respective revision and specification change notices are listed in the above listed Material Requisitions: 24590-WTP-3PS-G000-T0001, Supplier Quality Assurance Program Requirements; 24590-WTP-3PS-G000-T0002, Positive Material Identification (PMI) for Shop Fabrication; 24590-WTP-3PS-G000-T0003, Packing, Handling and Storage requirements; 24590-WTP-3PS-NWP0-T0001, General Welding and NDE Requirements for Suppliers; 24590-WTP-3PS-P000-T0001, Piping Material Classes General Description and Summary; 24590-WTP-3PS-PB01-T0001, Technical Supply Conditions for Pipe, Fittings, and Flanges; 24590-WTP-3PS-PS02-T0001, Shop Fabrication of Piping; 24590-WTP-3PS-PS02-T0002, Cold Bending of Pipe; 24590-WTP-3PS-PX04-T0001, Shop Applied Fusion Bonded Epoxy Coating for Underground Carbon Steel Pipe; 24590-WTP-3PS-AFPS-T0001, Shop Applied Special Protective Coating for Steel Items and Equipment; 24590-WTP-3PB-P000-TS32B, Piping Material Classification Pipe Class S32B; 24590-WTP-3PB-P000-TW31A, Piping Material Classification Pipe Class W31A; 24590-WTP-3PB-P000-TW32A, Piping Material Classification Pipe Class W32A; 24590-WTP-3PB-P000-TW62F, Piping Material Classification Pipe Class W62F; 24590-WTP-3PB-P000-TF10A, Piping Material Classification Pipe Class F10A.

References	Drawings	24590-PTF-M6-PWD-P0057, Rev. 2, PTF-P&ID Plant Wash & Disposal System Underground Transfer Lines (Q); 24590-PTF-M6-PWD-P0058, Rev. 3, P&ID-PTF Plant Wash & Disposal System Underground Transfer Lines (Q); 24590-WTP-B2-C12T-00001, Rev. 0, Interface Control Drawing; 24590-BOF-CS-80-00062, Rev. 2, Rad Transfer Lines Overall Key Plan; 24590-BOF-CS-80-00063, Rev. 0, Rad Transfer Lines DOE Pretreatment Building Plan for P1, P2, and P3 and Profile for P1; 24590-BOF-CS-80-00064, Rev. 0, Rad Transfer Lines DOE Pretreatment Building Profiles for P2 and P3; 24590-BOF-CS-80-00065, Rev. 1, Rad Transfer Lines Pretreatment Building to HLW Vitrification Building Plan for H1, H2, H3, and H4 and Profile for H1; 24590-BOF-CS-80-00066, Rev. 0, Rad Transfer Lines Pretreatment Building to HLW Vitrification Building Profiles for H2, andH3; 24590-BOF-CS-80-00067, Rev. 0, Rad Transfer Lines Pretreatment Building to HLW Vitrification Building Profile for H4; 24590-BOF-CS-80-00068, Rev. 1, Rad Transfer Lines Pretreatment Building to HLW Vitrification Building Plan for H5, H6, H7, and H8 and Profile for H5; 24590-BOF-CS-80-00069, Rev. 0, Rad Transfer Lines Pretreatment Building to HLW Vitrification Building Profiles for H6, andH7; 24590-BOF-CS-80-00070, Rev. 0, Rad Transfer Lines Pretreatment Building to HLW Vitrification Building Profile for H9; 24590-BOF-CS-80-00071, Rev. 2, Rad Transfer Lines Pretreatment Building to LAW Vitrification Building Plan for L1, L2, L3, and L4 Station 0+00 to 4+20; 24590-BOF-CS-80-00072, Rev. 2, Rad Transfer Lines Pretreatment Building to LAW Vitrification Building Plan for L1, L2, L3, and L4 Station 4+20 to 8+58; 24590-BOF-CS-80-00073, Rev. 2, Rad Transfer Lines Pretreatment Building to LAW Vitrification Building Plan for L5, L6, & L7 Station 0+00 to 4+20; 24590-BOF-CS-80-00074, Rev. 2, Rad Transfer Lines Pretreatment Building to LAW Vitrification Building Plan for L5, L6, & L7 Station 4+20 to 8+62; 24590-BOF-CS-80-00075, Rev. 0, Rad Transfer Lines Pretreatment Building to LAW Vitrification Building Profile for L1 Station 0+00 to 3+00 and 3+00 to 6+00; 24590-BOF-CS-80-00076, Rev. 0, Rad Transfer Lines Pretreatment Building to LAW Vitrification Building Profile for L1 Station 6+00 to 8+53; 24590-BOF-CS-80-00077, Rev. 0, Rad Transfer Lines Pretreatment Building to LAW Vitrification Building Profile for L2 Station 0+00 to 3+00 and 3+00 to 6+00; 24590-BOF-CS-80-00078, Rev. 0, Rad Transfer Lines Pretreatment Building to LAW Vitrification Building Profile for L2 Station 6+00 to 8+54; 24590-BOF-CS-80-00079, Rev. 0, Rad Transfer Lines Pretreatment Building to LAW Vitrification Building Profile for L3 Station 0+00 to 3+00 and 3+00 to 6+00; 24590-BOF-CS-80-00080, Rev. 0, Rad Transfer Lines Pretreatment Building to LAW Vitrification Building Profile for L3 Station 6+00 to 8+56; 24590-BOF-CS-80-00081, Rev. 0, Rad Transfer Lines Pretreatment Building to LAW Vitrification Building Profile for L4 Station 0+00 to 3+00 and 3+00 to 6+00; 24590-BOF-CS-80-00082, Rev. 0, Rad Transfer Lines Pretreatment Building to LAW Vitrification Building Profile for L4 Station 6+00 to 8+58; 24590-BOF-CS-80-00083, Rev. 0, Rad Transfer Lines Pretreatment Building to LAW Vitrification Building Profile for L5 Station 0+00 to 3+00 and 3+00 to 6+00; 24590-BOF-CS-80-00084, Rev. 0, Rad Transfer Lines Pretreatment Building to LAW Vitrification Building Profile for L5 Station 6+00 to 8+62; 24590-BOF-CS-80-00085, Rev. 0, Rad Transfer Lines Pretreatment Building to LAW Vitrification Building Profile for L6 Station 0+00 to 3+00 and 3+00 to 6+00; 24590-BOF-CS-80-00086, Rev. 0, Rad Transfer Lines Pretreatment Building to LAW Vitrification Building Profile for L6 Station 6+00 to 8+62; 24590-BOF-CS-80-00087, Rev. 0, Rad Transfer Lines Pretreatment Building to LAW Vitrification Building Profile for L7 Station 0+00 to 3+00 and 3+00 to 6+00; 24590-BOF-CS-80-00088, Rev. 0, Rad Transfer Lines Pretreatment Building to LAW Vitrification Building Profile for L7 Station 6+00 to 8+62; 24590-BOF-CS-80-00089, Rev. 2, Rad Transfer Lines Pretreatment Building to Laboratory Plan-Station 0+00 to 4+10; 24590-BOF-CS-80-00090, Rev. 2, Rad Transfer Lines Pretreatment Building to Laboratory Plan-Station 4+10 to 7+70; 24590-BOF-CS-80-00091, Rev. 2, Rad Transfer Lines Pretreatment Building to Laboratory Plan-Station 7+70 to 10+59; 24590-BOF-CS-80-00092, Rev. 0, Rad Transfer Lines Pretreatment Building to Laboratory Profile-Station 0+00 to 3+00 and 3+00 to 6+00; 24590-BOF-CS-80-00093, Rev. 0, Rad Transfer Lines Pretreatment Building to Laboratory Profile-Station 6+00 to 9+00 and 9+00 to 10+62; 24590-BOF-CS-80-00094, Rev. 0, Rad Transfer Lines Pretreatment Building to DOE Interface Plan for PD1 and PD2 Station 0+00 to 4+43; 24590-BOF-CS-80-00095, Rev. 0, Rad Transfer Lines Pretreatment Building to DOE Interface Plan for PD1 and PD2 Station 4+43 to 7+09; 24590-BOF-CS-80-00096, Rev. 0, Rad Transfer Lines Pretreatment Building to DOE Interface Profile PD1-Station 0+00 to 3+00 and 3+00 to 6+00; 24590-BOF-CS-80-00097, Rev. 0, Rad Transfer Lines Pretreatment Building to DOE Interface Profile PD1-Station 6+00 to 7+09; 24590-BOF-CS-80-00098, Rev. 0, Rad Transfer Lines Pretreatment Building to DOE Interface Profile PD2-Station 0+00 to 3+00 and 3+00 to 6+00; 24590-BOF-CS-80-00099, Rev. 0, Rad Transfer Lines Pretreatment Building to DOE Interface Profile PD2-Station 6+00 to 7+10; 24590-BOF-CS-80-00100, Rev. 0, Rad Transfer Lines Miscellaneous Details Sheet 1; 24590-BOF-CS-80-00101, Rev. 2, Rad Transfer Lines Miscellaneous Details Sheet 2; 24590-BOF-CS-80-00102, Rev. 0, Rad Transfer Lines Miscellaneous Details Sheet 3;

References	Drawings	24590-BOF-P4-TCP-00001001, Rev. 2, Pipe Fabrication and Support Location Drawing TCP-PH-00117-S32B-03; 24590-BOF-P4-TCP-00001002, Rev. 2, Pipe Fabrication and Support Location Drawing TCP-PH-00117-S32B-03; 24590-BOF-P4-TCP-00001003, Rev. 2, Pipe Fabrication and Support Location Drawing TCP-PH-00117-S32B-03; 24590-BOF-P4-TCP-00002001, Rev. 2, Pipe Fabrication and Support Location Drawing TCP-PH-00118-S32B-03; 24590-BOF-P4-TCP-00002002, Rev. 2, Pipe Fabrication and Support Location Drawing TCP-PH-00118-S32B-03; 24590-BOF-P4-TCP-00002003, Rev. 2, Pipe Fabrication and Support Location Drawing TCP-PH-00118-S32B-03; 24590-BOF-P4-TCP-00003001, Rev. 2, Pipe Fabrication and Support Location Drawing TCP-PH-00119-S32B-03; 24590-BOF-P4-TCP-00003002, Rev. 2, Pipe Fabrication and Support Location Drawing TCP-PH-00119-S32B-03; 24590-BOF-P4-TCP-00003003, Rev. 2, Pipe Fabrication and Support Location Drawing TCP-PH-00119-S32B-03; 24590-BOF-P4-FRP-00001, Rev. 1, Pipe Fabrication and Support Location Drawing FRP-PZ-01749-W62F-03; 24590-BOF-P4-FRP-00002, Rev. 1, Pipe Fabrication and Support Location Drawing FRP-PZ-01750-W62F-03; 24590-BOF-P4-FRP-00003, Rev. 1, Pipe Fabrication and Support Location Drawing FRP- PZ-01751-W62F-03; 24590-BOF-P4-HLP-00001, Rev. 2, Pipe Fabrication and Support Location Drawing HLP-PC-00036-S32B-03; 24590-BOF-P4-HLP-00002, Rev. 2, Pipe Fabrication and Support Location Drawing HLP-PC-00037-S32B-03; 24590-BOF-P4-HLP-00003, Rev. 2, Pipe Fabrication and Support Location Drawing HLP-PC-00038-S32B-03; 24590-BOF-P4-HLP-00004, Rev. 2, Pipe Fabrication and Support Location Drawing HLP-PC-00039-S32B-03; 24590-BOF-P4-LVP-00001001, Rev. 2, Pipe Fabrication and Support Location Drawing LVP-ZY-00127-W31A-03; 24590-BOF-P4-LVP-00001002, Rev. 2, Pipe Fabrication and Support Location Drawing LVP-ZY-00127W31A-03; 24590-BOF-P4-LVP-00001003, Rev. 2, Pipe Fabrication and Support Location Drawing LVP-ZY-00127-W31A-03; 24590-BOF-P4-LVP-00002001, Rev. 2, Pipe Fabrication and Support Location Drawing LVP-ZY-00128-W31A-03; 24590-BOF-P4-LVP-00002002, Rev. 2, Pipe Fabrication and Support Location Drawing LVP-ZY-00128-W31A-03; 24590-BOF-P4-LVP-00002003, Rev. 2, Pipe Fabrication and Support Location Drawing LVP-ZY-00128-W31A-03; 24590-BOF-P4-RLD-00001001, Rev. 2, Pipe Fabrication and Support Location Drawing RLD-ZS-03385-W31A-03; 24590-BOF-P4-RLD-00001002, Rev. 2, Pipe Fabrication and Support Location Drawing RLD-ZS-03385-W31A-03; 24590-BOF-P4-RLD-00001003, Rev. 2, Pipe Fabrication and Support Location Drawing RLD-ZS-03385-W31A-03; 24590-BOF-P4-RLD-00002001, Rev. 2, Pipe Fabrication and Support Location Drawing RLD-ZF-02176-W31A-03; 24590-BOF-P4-RLD-00002002, Rev. 2, Pipe Fabrication and Support Location Drawing RLD-ZF-02176-W31A-03; 24590-BOF-P4-RLD-00002003, Rev. 2, Pipe Fabrication and Support Location Drawing RLD-ZF-02176-W31A-03; 24590-BOF-P4-RLD-00003001, Rev. 2, Pipe Fabrication and Support Location Drawing RLD-ZN-02993-W31A-03; 24590-BOF-P4-RLD-00003002, Rev. 2, Pipe Fabrication and Support Location Drawing RLD-ZN-02993-W31A-03; 24590-BOF-P4-RLD-00003003, Rev. 2, Pipe Fabrication and Support Location Drawing RLD-ZN-02993-W31A-03; 24590-BOF-P4-RLD-00003004, Rev. 2, Pipe Fabrication and Support Location Drawing RLD-ZN-02993-W31A-03; 24590-BOF-P4-RLD-00004, Rev. 2, Pipe Fabrication and Support Location Drawing RLD-ZH-00052-W31A-03; 24590-BOF-P4-RLD-00005, Rev. 2, Pipe Fabrication and Support Location Drawing RLD-ZH-00050-W31A-03; 24590-BOF-P4-RLD-00006' Rev. 2, Pipe Fabrication and Support Location Drawing RLD-ZH-00051-W31A-03; 24590-BOF-P4-RLD-00007, Rev. 2, Pipe Fabrication and Support Location Drawing RLD-ZF-03396-W31A-03; 24590-BOF-P3-RLD-ZS03382006, Rev. 1, Balance of Facilities Isometric; 24590-BOF-P3-RLD-ZS03383006, Rev. 1, Balance of Facilities Isometric; 24590-BOF-P3-RLD-ZS03382056, Rev. 1, Balance of Facilities Isometric; 24590-BOF-P3-RLD-ZS03383056, Rev. 1, Balance of Facilities Isometric;

References	Drawings	24590-LAW-P3-LCP-PB01368001, Rev. 2, LAW Vitrification Building Isometric; 24590-LAW-P3-LCP-PB01368002, Rev. 3, LAW Vitrification Building Isometric; 24590-LAW-P3-LCP-PB01369001, Rev. 2, LAW Vitrification Building Isometric; 24590-LAW-P3-LCP-PB01369002, Rev. 4, LAW Vitrification Building Isometric; 24590-LAW-P3-LCP-PB01370001, Rev. 2, LAW Vitrification Building Isometric; 24590-LAW-P3-LCP-PB01370002, Rev. 4, LAW Vitrification Building Isometric; 24590-PTF-P3-TLP-ZS00004001, Rev. 0, Pretreatment Facility Isometric; 24590-PTF-P3-TLP-ZS00004002, Rev. 2, Pretreatment Facility Isometric; 24590-PTF-P3-PWD-ZF02993001, Rev. 0, Pretreatment Facility Isometric; 24590-PTF-P3-PWD-ZF02993002, Rev. 2, Pretreatment Facility Isometric; 24590-PTF-P3-PWD-ZN01708001, Rev. 0, Pretreatment Facility Isometric; 24590-PTF-P3-PWD-ZN01708002, Rev. 2, Pretreatment Facility Isometric; 24590-PTF-P3-PWD-ZH00017001, Rev. 0, Pretreatment Facility Isometric; 24590-PTF-P3-PWD-ZH00017002, Rev. 2, Pretreatment Facility Isometric; 24590-PTF-P3-PWD-ZH00016001, Rev. 0, Pretreatment Facility Isometric; 24590-PTF-P3-PWD-ZH00016002, Rev. 2, Pretreatment Facility Isometric; 24590-PTF-P3-PWD-ZH00015001, Rev. 0, Pretreatment Facility Isometric; 24590-PTF-P3-PWD-ZH00015002, Rev. 2, Pretreatment Facility Isometric; 24590-PTF-P3-PWD-ZF02995001, Rev. 1, Pretreatment Facility Isometric; 24590-PTF-P3-PWD-ZF02995002, Rev. 1, Pretreatment Facility Isometric; 24590-HLW-P3-HCP-PC00098001, Rev. 2, HLW Vitrification Building Isometric; 24590-HLW-P3-HCP-PC00098002, Rev. 1, HLW Vitrification Building Isometric; 24590-HLW-P3-HCP-PC00101001, Rev. 2, HLW Vitrification Building Isometric; 24590-HLW-P3-HCP-PC00101002, Rev. 1, HLW Vitrification Building Isometric; 24590-HLW-P3-HCP-PC00102001, Rev. 2, HLW Vitrification Building Isometric; 24590-HLW-P3-HCP-PC00102002, Rev. 1, HLW Vitrification Building Isometric; 24590-HLW-P3-HCP-PC00099001, Rev. 2, HLW Vitrification Building Isometric; 24590-HLW-P3-HCP-PC00099002, Rev. 1, HLW Vitrification Building Isometric; 24590-WTP-M6-50-P0001, Rev. 1, P&ID Symbols and Legend Sheet 1 of 6; 24590-WTP-M6-50-P0002, Rev. 1, P&ID Symbols and Legend Sheet 2 of 6; 24590-WTP-M6-50-P0003, Rev. 1, P&ID Symbols and Legend Sheet 3 of 6; 24590-WTP-M6-50-P0004, Rev. 1, P&ID Symbols and Legend Sheet 4 of 6; 24590-WTP-M6-50-P0005, Rev. 1, P&ID Symbols and Legend Sheet 5 of 6; 24590-WTP-M6-50-P0006, Rev. 1, P&ID Symbols and Legend Sheet 6 of 6.

Information Assessed		Source of Information	Assessment
Design	Ancillary equipment design standards are appropriate and adequate for the equipment's intended use.	Drawings listed above under References; 24590-WTP-DC-PS-01-001, Rev. 4, Pipe Stress Design Criteria including "Pipe Stress Criteria" and "Span Method Criteria"; ASME B31.3, Process Piping, American Society of Mechanical Engineers Code for Pressure Piping; ASME Boiler & Pressure Vessel Code, Section III Rules for Construction of Nuclear Facility Components, American Society of Mechanical Engineers; 24590-WTP-3DP-G04T-00905, Rev. 6, Determination of Quality Levels.	The Pipe Stress Design Criteria document identifies ASME B31.3 as the design code for both safety grade and commercial grade piping systems of the WTP. To satisfy more stringent seismic requirements, the design criteria includes methodology provided in the ASME Section III, to supplement the design rules of ASME B31.3 code for analysis and design of safety grade piping. The Piping Material Classes General Description document identifies the design conditions including limiting pressure and temperature service conditions and the corrosion/erosion allowance for each piping class, the piping material and wall thickness, and the appropriate design code(s). The description for each class identifies the ancillary equipment requirements for pipes and fittings for the service conditions in which they will be employed. The pipe classes for the transfer lines being considered are; S32B, W31A, W32A, W62F, and F10A. All of the transfer lines considered here are double-walled pipe containing a 3 in. nominal pipe size stainless steel carrier pipe inside a 6 in. nominal pipe size carbon steel or stainless steel seamless encasement pipe (jacket) with the exception of the LERF/ETF effluent transfer line (RLD-ZS-03382-W31A-04) which is designed with a 4 in. nominal stainless steel carrier pipe. (Note: RLD-ZS-03382-W31A-04 and RLD-ZS-03383-W31A-03 have 12 in. and 10 in. jackets respectively, at the interface with DOE LERF/ETF leak detection chamber. Portions of these jackets and carrier pipes are of F10A [Reinforced Fiberglass] pipe classification.) The transfer lines are identified on the P&ID drawings as Quality Levels (QL-1, QL-2 or commercial grade [CM]) and Seismic Categories (SC-1, SC-II, and SC-III). Seismic Categories are discussed in detail in the Pipe Stress Design Criteria document. Quality Levels are discussed in the Determination of Quality Levels document. These codes and standards are acceptable and adequate for the design of the double-walled transfer lines.

Information Assessed		Source of Information	Assessment
Design	If the ancillary equipment to be used is not built to a design standard, the design calculations demonstrate sound engineering principles of construction.	ASME B31.3, Process Piping, American Society of Mechanical Engineers Code for Pressure Piping; 24590-WTP-DC-PS-01-001, Rev. 4, Pipe Stress Design Criteria including "Pipe Stress Criteria" and "Span Method Criteria"; Bechtel National, Inc. (BNI) Memorandum # CCN 123298, Evaluation of Underground Process Lines to Revised Ground Motion and Resolve IQRPE Issues With use of Controlled Density Fill (June 21, 2005); 24590-WTP-3DP-G04T-00906, Rev. 3, Isometric Drawings and Associated Calculations.	The ancillary equipment piping is to be designed in accordance with the ASME B31.3 design standard for all applicable load conditions and load combinations as noted above. Pipe Stress Design Criteria document provides detail design process. The current updated and applicable input design parameters used for the design of underground transfer lines as described in the in BNI Memorandum #CCN 123298, were reviewed and found to be appropriate. Furthermore, the design process and controls described in Isometric Drawings and Associated Calculations document provides adequate assurance that subject underground transfer lines ancillary equipment are properly designed, installed, and verified to meet the requirements identified in the applicable design criteria established for the project. The documentation reviewed demonstrates that sound design engineering principles are used for the design and construction.

Information Assessed		Source of Information	Assessment
Design	Ancillary equipment has adequate strength at the end of its design life to withstand the operating pressure, operating temperature, thermal expansion, and seismic loads. Equipment is protected against physical damage and excessive stress due to settlement, vibration, expansion, or contraction.	Specifications listed above under References; 24590-WTP-DC-PS-01-001, Rev. 4, Pipe Stress Design Criteria including "Pipe Stress Criteria" and "Span Method Criteria"; ASME B31.3, Process Piping, American Society of Mechanical Engineers Code for Pressure Piping; ASME Boiler and Pressure Vessels (B&PV) Code, Section III, Division 1 (Subsection NC and Appendices F and N), American Society of Mechanical Engineers; UBC 1997, Uniform Building Code, International Conference of Building Officials; ME101, Linear Elastic Analysis of Piping, Version N8 software, Bechtel Corporation, Computer Services Library, 50 Beale St., San Francisco, California; 24590-WTP-VV-PS-01-001, Rev. 2 Verification and Validation Report for ME101, Linear Elastic Analysis of Piping Version N8; Bechtel National, Inc. (BNI) Memorandum # CCN 123298, Evaluation of Underground Process Lines to Revised Ground Motion and Resolve IQRPE Issues With use of Controlled Density Fill (June 21, 2005); 24590-WTP-3DP-G04T-00906, Rev. 3, Isometric Drawings and Associated Calculations.	The Pipe Stress Design Criteria document specifies the ASME B31.3 Code to address operating pressure, operating temperature, thermal expansion/contraction, settlement or support displacements, corrosion, and vibration and seismic loads. To supplement the requirements of ASME B31.3, elements of the ASME B&PV Code, Section III (Subsection NC and Appendices F and N) are used for seismic design of Seismic Category (SC-I/II) ancillary equipment and elements of UBC 1997 Code are used for the design of SC-III ancillary equipment. Details of the seismic design methods are discussed in the Pipe Stress Design Criteria document. The ME101Linear Elastic Analysis of Piping computer program is used for static and dynamic design analysis for the more complex ancillary equipment such as the underground transfer lines. The program has been verified and validated. The Piping Material Class Description document provides enveloping values for design pressure and temperature limits for the primary carrier pipes and the secondary encasement pipes for each pipe class. A bounding corrosion/erosion allowance is furnished for the primary pipe for each class. Additional information is furnished in the individual Pipe Class specifications. Use of approved and validated computer program (ME101) to analyze piping designs is appropriate as documented in Verification and Validation Report document. These codes and standards are adequate and appropriate to assure that the ancillary equipment has adequate strength at the end of design life. The current updated and applicable input design parameters used for the design of underground transfer lines are described in the in BNI Memorandum #CCN 123298, were reviewed and found to be appropriate. Furthermore, the transfer lines fabrication or isometric drawings released for construction by BNI, and the design process and controls described in Isometric Drawings and Associated Calculations document provides adequate assurance that subject underground transfer lines ancillary equipment are properly designed, installed, and verified to meet the requirements identified in the applicable design criteria established for the project. The documents (listed in the Source of Information column) were reviewed which demonstrate that sound design engineering principles are used for the design and construction of the transfer lines.

Information Assessed		Source of Information	Assessment
Supports	Ancillary equipment supports are adequately designed.	Drawings listed above under References; 24590-WTP-PER-PS-02-001, Rev. 4, Ancillary Equipment Pipe Support Design; 24590-WTP-DC-PS-01-001, Rev. 4, Pipe Stress Design Criteria including "Pipe Stress Criteria" and "Span Method Criteria"; ME101, Linear Elastic Analysis of Piping, Version N8 software, Bechtel Corporation, Computer Services Library, 50 Beale St., San Francisco, California; 24590-WTP-VV-PS-01-001, Rev. 2, Verification and Validation Test Plan/Test Report for ME101, Linear Elastic Analysis of Piping Version N8; 24590-BOF-3PS-C000-T0002, Rev. 3, Engineering Specification for Excavation and Backfill of Underground Radioactive Waste Transfer Lines; 24590-BOF-3PS-CE01-T0001, Rev. 5, Engineering Specification for Excavation and Backfill; ASME B31.3, Process Piping, American Society of Mechanical Engineers Code for Pressure Piping; ASME Section III, Division 1, Subsection NC and Appendices F and N, American Society of Mechanical Engineers; UBC 1997, Uniform Building Code, International Conference of Building Officials; Bechtel National, Inc. (BNI) Memorandum # CCN 123298, Evaluation of Underground Process Lines to Revised Ground Motion and Resolve IQRPE Issues With use of Controlled Density Fill (June 21, 2005); 24590-WTP-3DP-G04T-00906, Rev. 3, Isometric Drawings and Associated Calculations.	Pipe supports for the primary transfer line inside the secondary containment pipe consist of small support plates and spacers installed between the exterior surface of the primary pipe and the inside surface of the secondary containment pipe. A standard set of typical details is provided in the Ancillary Equipment Pipe Support Design document. An adequate set of horizontal supports, guides, and pipe anchor typical details is furnished to the fabricator to allow production of the spools. Additional details are furnished for closure of encasements at field connections, installation of insulation with an outer wrapping and elbow assemblies. The design evaluations for the pipe-in-pipe transfer lines are accomplished with ME101 computer software models that represent the primary and secondary pipes, internal supports, guides and anchors, the surrounding backfill and soil structural characteristics, and the line routings (geometries). The Pipe Stress Design Criteria document is organized around the design requirements of ASME B31.3 Code supplemented by ASME Section III, Division 1, Subsection NC and Appendices F and N requirements for design analysis of SC-I/II components and UBC requirements for design analysis of SC-III components. Design methodology, materials, loads, and load combinations used are described in Ancillary Equipment Pipe Support Design document. Analysis is by manual calculation or approved, and verified and validated computer programs. Backfill requirements to provide structural support for the lines and protect the underground transfer lines from surface loads are appropriated identified in two Excavation and Backfill specifications. The drawings show the locations where special low density backfills materials are used to control underground transfer line stresses at the entry points to the process buildings. These codes and standards are appropriate and adequate for the underground transfer lines over the range of conditions identified for these systems. Furthermore, the BNI Memorandum #CCN 123298, the transfer lines fabrication or isometric drawings released for construction by BNI, and the design process and controls described in the Isometric Drawings and Associated Calculations document provide adequate assurance that the supports for the subject underground transfer lines ancillary equipment are properly designed, installed, and verified to meet the requirements identified in the applicable design criteria established for the project.

Information Assessed		Source of Information	Assessment
Connections	Seams and connections are adequately designed.	Specifications listed above under References; 24590-WTP-3PS-PS02-T0003, Rev. 4, Engineering Specification for Field Fabrication and Installation of Piping; ASME B31.3, Process Piping, American Society of Mechanical Engineers Code for Pressure Piping; ASME Boiler and Pressure Vessel Code (B&PV) Section IX, Welding and Brazing Qualifications, American Society of Mechanical Engineers; ASME Boiler and Pressure Vessel Code (B&PV) Section V, Nondestructive Examination, American Society of Mechanical Engineers; 24590-WTP-PER-PS-02-001, Rev. 4, Ancillary Equipment Pipe Support Design.	The specifications for Shop Fabrication of Piping and for Field Fabrication and Installation of Piping show that the double-walled transfer lines use welded butt joints for all connections. The transfer lines are Quality Level (QL-1, QL-2) or commercial grade (CM). Welding requirements are in accordance with ASME B31.3. Welder qualifications are in accordance with the ASME B&PV Section IX requirements. Nondestructive examinations are to be conducted in accordance with ASME B&PV Section V as specified in the Engineering Specifications for Shop Fabrication of Piping and for Field Fabrication and Installation of Piping. The Ancillary Equipment Pipe Support Design document shows examples of standard assemblies for the transfer lines and encasements. These are adequate and appropriate design and fabrication codes and standards for the subject ancillary equipment.
Frost Heave	The system will withstand the effects of frost heave.	Drawings listed above under References; 24590-WTP-DC-ST-01-001, Rev. 8, Structural Design Criteria; 24590-WTP-DB-ENG-01-001, Rev. 1C, Basis of Design.	The Structural Design Criteria identifies the frost line as being 30 in. below grade. The Civil, Structural, Architectural section in Basis of Design document requires that all underground pipes be installed with the top of pipe at least 30 in. below grade so that the pipes are not subject to frost heave. The drawings show that these transfer lines are well below the 30 in. frost line depth, therefore, they will not be subjected to the frost heave effects. Furthermore, acceptance of the underground transfer lines installation by Bechtel National, Inc. (BNI) ensures that they are installed below the frost line.

Information Assessed		Source of Information	Assessment
Waste Characteristics	Characteristics of the waste to be stored or treated have been identified (ignitable, reactive, toxic, specific gravity, vapor pressure, flash point, temperature)	Specifications listed above under References; 24590-WTP-PSAR-ESH-01-002-02, Rev. 1A, Preliminary Safety Analysis Report to Support Construction Authorization; PT Facility Specific Information; 24590-PTF-PER-M-02-003, Rev. 1, Underground Pipe Protection; 24590-WTP-PER-PR-03-002, Rev. 2, Toxic Vapors and Emissions from WTP Tank Systems and Miscellaneous Treatment Unit Systems; 24590-WTP-PER-PR-03-001, Rev. 1, Prevention of Hydrogen Accumulation in WTP Tank Systems and Miscellaneous Treatment Unit Systems; 24590-WTP-DB-ENG-01-001, Rev. 1C, Basis of Design.	Preliminary Safety Analysis Report identifies the Important to Safety functions for the waste transfer lines. They are listed as maintaining structural integrity for their design life while resisting a high radiation environment, corrosive effects of the process streams, and the erosive nature of the suspended solids. In addition, the waste transfer lines must maintain structural integrity during and after a seismic event. The Underground Pipe Protection document and the specification for Piping Material Classes General Description provides the pertinent design parameters including, pressure, temperature, material, corrosion, etc. to handle specific type of waste materials to be transferred through each pipe class. The prevention of Hydrogen Accumulation and Toxic Vapors and Emissions documents provides hydrogen and toxic vapor mitigating features for the tank system, respectively. These aforementioned documents do not identify any flammable gas or toxic vapors buildup in these waste transfer lines. Transfer lines originating or terminating in source or downstream receiving tanks typically include a dip tube that terminates below the surface of the low level heel in each tank. The dip tubes isolate the lines from any potential flammable gas buildup in the tank vapor spaces. The Basis of Design document requires a facility wide grounding system to be in place, including process equipment, to control ignition sources. The design has included adequate and appropriate features to address the waste characteristics including pressure, temperature, corrosion, erosion and control of potential flammable gases in ancillary equipment.

Information Assessed		Source of Information	Assessment
Waste Characteristics	Ancillary equipment is designed to handle the wastes with the characteristics defined above and any treatment reagents.	Drawings listed above under References; 24590-WTP-DB-ENG-01-001, Rev. 1C, Basis of Design; WAC-173-303-640, Washington Administrative Code, Dangerous Waste Regulations for Tank Systems; 24590-PTF-PER-M-02-003, Rev. 1, Underground Pipe Protection; 24590-WTP-PER-M-02-002, Rev. 1, Materials for Ancillary Equipment.	The Basis of Design requires that dangerous waste tank systems meet the requirements of WAC 173-303-640. The Underground Pipe Protection document and Materials for Ancillary Equipment document discuss the rationale for material selection for the underground transfer lines. The primary lines from the Hanford Tank Farms are 304L stainless steel because they are used to transfer alkaline wastes to the WTP. The intra-plant transfer lines in the WTP and the effluent transfer lines from the WTP to the Hanford Liquid Effluent Retention Facility/Effluent Treatment Facility (LERF/ETF facilities), use primary waste carrier lines of 316L stainless steel to provide for transferring less alkaline solutions. The primary pipelines will be flushed with corrosion inhibited water after each use, for corrosion control. Carbon steel or stainless steel pipes are selected for the secondary encasement lines as shown on the P&ID drawings. During normal operations, the annulus between the exterior of the primary pipelines and the interior of the encasement lines remains dry which limits corrosion. The carbon steel encasement lines have sufficient wall thickness to resist internal corrosion from a waste leak for a period of time adequate to detect the leak and allow for flushing of the secondary line. The exteriors of the secondary encasements for the intra-plant transfer lines are protected with a special coating and a cathodic protection system. The exteriors of the secondary encasements for the transfer lines from the Hanford Tank Farms to the WTP and the effluent transfer lines from the WTP to the Hanford LERF/ETF facilities are enclosed in rigid foam insulation with a waterproof outer non-metallic jacket of High Density Polyethylene (HDPE) material. This isolates them from moisture in the surrounding soils to prevent exterior corrosion.

Information Assessed		Source of Information	Assessment
Compatibility	The pH range of the waste, waste temperature and the corrosion behavior of the structural materials are adequately addressed. Ancillary equipment material and protective coatings ensure the ancillary equipment structure is adequately protected from the corrosive effects of the waste stream and external environments. The protection is sufficient to ensure the equipment will not leak or fail for the design life of the system.	Material Requisitions, Drawings, and Specifications listed above under References; 24590-PTF-PER-M-02-003, Rev. 1, Underground Pipe Protection; 24590-WTP-PER-M-02-002, Rev. 1, Materials for Ancillary Equipment; 24590-WTP-3YD-CPE-00001, Rev. 0, System Description for Waste Treatment Plant Cathodic Protection (CPE); 24590-WTP-3PS-EQ00-T0002, Rev. 3, Engineering Specification for Cathodic Protection; 24590-WTP-3PS-PX04-T0003, Rev. 2, Specification for Shop and Field Application of an Epoxy Coating for Underground Carbon Steel Fittings, Valves and Special Items; NACE RP-0169, Standard Recommended Practice: Control of External Corrosion on Underground or submerged Metallic Piping System, National Association of Corrosion Engineers (NACE) International (1996); NACE RP-0285, Standard Recommended Practice: Corrosion Control of Underground Storage Tank Systems by Cathodic Protection, National Association of Corrosion Engineers (NACE) International (1995).	The Underground Pipe Protection report identifies that two grades of stainless steel have been selected for the underground transfer lines. The Materials for Ancillary Equipment document also provide the rationale for the selection of material for the downstream lines from the source plant item. The primary transfer lines from the Hanford Tank Farms are 304L stainless steel because they are used to transfer alkaline wastes to the WTP. All other underground transfer lines use primary lines of 316L stainless steel to provide for transferring less alkaline solutions. All primary transfer lines are to be flushed with corrosion inhibited water after each use. Secondary encasement lines are designed to be sufficiently internally corrosion resistant to provide leak protection from the time a primary leak starts until the leak has been detected and the transfer line has been isolated. The soil side of the secondary encasement lines is protected with cathodic protection in accordance with NACE Standard Recommended Practice (NACE RP-0169 and NACE RP-0285) documents, (except for the Waste Feed Receipt Process[FRP] System transfer lines and the effluent transfer lines from the WTP to the Hanford LERF/ETF facilities). The System Description document identifies the overall scope of the WTP cathodic protection that will be applied to the waste transfer lines. Detailed specifications for design and construction are furnished in the Engineering Specification for Cathodic Protection. Transfer lines evaluated in this integrity assessment have carbon steel secondary encasements. An impressed current cathodic protection system is to be used to protect these secondary components from corrosion where they are buried. Specifications for Shop and Field Application of Epoxy Coating require that epoxy costing will be applied to the outside of the transfer lines to control current flow in the cathodic protection system. Consideration was given to service life and cumulative anticipated radiation exposure of candidate epoxy coatings during development of the specifications. The Waste Feed Receipt Process (FRP) System underground transfer lines and the effluent transfer lines are furnished with additional external corrosion protection by adding an external waterproof barrier to the lines. This isolates them from moisture in the surrounding soils for corrosion protection in lieu of cathodic protection. This barrier consists of a 2 in. layer of sprayed or injected closed-cell polyurethane foam with an external jacket of extruded high density polyethylene (HDPE) jacket with a minimum thickness of 150 mils as discussed in the Material Requisition. The corrosion protection provisions for the subject transfer lines have been reviewed by an Independent Corrosion Expert (ICE). The ICE prepared two reports which state that the corrosion protection is adequate. These two reports are included herewith as Attachment A and B to this report.

Information Assessed		Source of Information	Assessment
Corrosion Allowance	Corrosion allowance is adequate for the intended service life of the ancillary equipment.	Specifications listed above under References; 24590-WTP-DB-ENG-01-001, Rev. 1C, Basis of Design; 24590-WTP-DC-PS-01-001, Rev. 4, Pipe Stress Design Criteria including "Pipe Stress Criteria" and "Span Method Criteria"; ASME B31.3, Process Piping, American Society of Mechanical Engineers Code for Pressure Piping; 24590-PTF-PER-M-02-003, Rev. 1, Underground Pipe Protection.	The required service life of 40 years for mechanical systems, e.g. piping, is identified in the Basis of Design. The Pipe Stress Design Criteria identifies ASME B31.3 as the design code for WTP piping. Consideration of corrosion, including corrosion allowance, is a mandatory requirement of ASME B31.3 and is appropriately supplemented in the Pipe Stress Design Criteria document. The Underground Pipe Protection document identifies the choice of 304L and 316L stainless steel as conservative for the primary underground transfer lines which are free-draining, operated only periodically during transfers, and are flushed with corrosion inhibited water after each transfer. The corrosion/erosion allowances for underground transfer pipe classes F10A, S32B, W31A, W32A, and W62F, and are listed in Specification for Piping Material Class General Description document. Corrosion/erosion allowances range for carrier pipe is from 0.0160 in. for Pipe Class W62F to 0.0937 in. for Pipe Class S32B. No corrosion/erosion is anticipated or specified for the jacket pipe of classes S32B, W31A, W32A, and W62F. No corrosion/erosion allowances are anticipated or specified for class F10A carrier or jacket pipe.
Pressure Controls	Pressure controls (vents and relief valves) are adequately designed to ensure pressure relief if normal operating pressures in the vessels are exceeded.	24590-WTP-DC-PS-01-001, Rev 4, Pipe Stress Design Criteria including "Pipe Stress Criteria" and "Span Method Criteria"; ASME B31.3, Process Piping, American Society of Mechanical Engineers Code for Pressure Piping.	The Pipe Stress Design Criteria identifies ASME B31.3 as the design code for the ancillary equipment piping. ASME B31.3 requires provision be made to safely contain or relieve any pressure to which the piping may be subjected. ASME B31.3 piping not protected by a pressure relieving device, or that can be isolated from a pressure relieving device must be designed for at least the highest pressure that the system can develop. This requirement applies to the primary transfer lines. The transfer lines all terminate in dip tubes, which are free-draining to the heels in the Pretreatment Building vessels. The maximum internal pressure is therefore limited by the design configuration.

Information Assessed		Source of Information	Assessment
Pressure Controls	Maximum flows and any unusual operating stresses are identified	Specifications, and Drawings listed above under References; ASME B31.3, Process Piping, American Society of Mechanical Engineers Code for Pressure Piping; 24590-WTP-3DP-G04T-00906, Rev. 3, Isometric Drawings and Associated Calculations.	The expected flow paths for the transfer lines are identified on the reference P&ID drawings. As noted in the adjacent item above, ASME B31.3 requires piping to be designed for the highest pressure that a system can develop. Each transfer line is designed for the highest anticipated temperature and pressure values, which are also within the bounding maximum design temperature and pressure values listed for each piping material class in the specification for Piping Material Class General Description document. ASME B31.3 and the associated standards are appropriate and adequate for the design of the transfer lines. Furthermore, the transfer lines fabrication or isometric drawings released for construction by BNI, and the design process and controls described in the Isometric Drawings and Associated Calculations document provides adequate assurance that subject underground transfer lines ancillary equipment are properly designed, installed, and verified to meet the requirements identified in the applicable design criteria established for the project.

Information Assessed		Source of Information	Assessment
Secondary Containment	Ancillary equipment is designed with secondary containment that is constructed of materials compatible with the waste and of sufficient strength to prevent failure (pressure gradients, waste, climatic conditions, daily operations), provided with a leak-detection system, and designed to drain and remove liquids.	Drawings listed above under References; ASME B31.3, Process Piping, American Society of Mechanical Engineers Code for Pressure Piping; 24590-WTP-DC-PS-01-001, Rev. 4, Pipe Stress Design Criteria including "Pipe Stress Criteria" and "Span Method Criteria"; 24590-PTF-PER-M-02-003, Rev. 1, Underground Pipe Protection; 24590-BOF-3PS-C000-T0002, Rev. 3, Engineering Specification for Excavation and Backfill of Underground Radioactive Waste Transfer Lines; 24590-BOF-3PS-CE01-T0001, Rev. 5, Engineering Specification for Excavation and Backfill; ASTM Annual Book of ASTM Standards, American Society of Testing and Materials; 24590-WTP-PER-J-02-002, Rev. 3, Low Point Leak Detection in Secondary Containment Systems for Buried Co-Axial Transfer Lines.	The 6 in. diameter secondary encasement pipes shown on the P&ID drawings must be designed to ASME B31.3 as noted in the Pipe Stress Design Criteria. ASME B31.3 requires piping to be designed for superimposed dead loads such as the soil overburden for the buried transfer lines and potential vehicular loads. The Underground Pipe Protection document identifies that the secondary containments have sufficient corrosion endurance to ensure that the secondary lines will not leak for a time period sufficient to detect a leaking primary and isolate the transfer line from service. The two Excavation and Backfill specifications have specific provisions for the use of controlled density fills for backfilling trench excavations for outside buried piping. They also address granular pipe bedding material that conforms to various ASTM standards and a proviso that controlled density fill (CDF) conforming to the ASTM is also acceptable. Installation instructions are provided for installing bedding material to line and grade with dimensional tolerances for minimum and maximum bedding material installation and appropriate lift and compaction requirements. The installation of bedding materials is coordinated with the backfill and compaction requirements for subgrade preparation for roads and paved areas. Testing, inspection, and documentation requirements are identified in Excavation and Backfill specifications for quality control of bedding installation as each lift is placed. The fill and compaction requirements for the installation of underground transfer lines are appropriate and adequate to ensure that the lines will perform as designed. The P&ID drawings show that each transfer line has a low point drain and leak detection to identify primary line leaks. Details of the leak detection system are discussed in the Low Point Leak Detection in Secondary Containment Systems for Buried Co-Axial Transfer Lines document. Flushing capabilities are provided at the high point end of each transfer line for removing leaked waste or accumulated liquid in the secondary lines by flushing to the low point drains.

ATTACHMENT A

Corrosion Integrity Assessment of Waste Transfer Pipelines in the Hanford Waste Treatment Plant

by

Independent Corrosion Expert (ICE)

C C S **Corrosion Control Specialists**
P.O. Box 5303
Kent, Washington 98064-5303
Phone (253) 520-3424 • Fax (253) 520-3425

CORROSION INTEGRITY ASSESSMENT OF

Waste Transfer Pipelines in the
Hanford Waste Treatment Plant
Owned/Operated by the U. S. Department of Energy
Office of River Protection, Richland Washington
per WAC 173-303-640(3)(a) through (g)

This corrosion certification is for the waste transfer pipelines at the Hanford Waste Treatment Plant Richland, Washington. The transfer pipelines included in this certification are shown on drawings 24590-PTF-M6-PWD-P0057 and -P0058. This corrosion integrity assessment was conducted to identify components of the environment or the piping network that could lead to corrosion damage to the pipe that could lead to failure of the pipe. The assessment evaluated the corrosion protection measures taken to assure that they were correctly designed and compatible with the environment in which they are to operate. This assessment is provided as a subcontract from COGEMA, Inc. This assessment has considered:

A. CODES, STANDARDS, REGULATIONS, AND PUBLICATIONS:

NFPA 70 - 1996	National Electrical Code (NEC)
NACE International RP-0169-1996	Recommended Practice. "Control of External Corrosion on Underground or Submerged Metallic Piping Systems"
WAC 173-303-640 - October 3, 2001"	Washington Administrative Code, Title 173, WAC Department of Ecology, Dangerous Waste Regulations for Tank Systems
NACE-RP-0274	High Voltage Electrical Inspection of Pipeline Coatings

Steel Structures Painting Council (SSPC)

SSPC-SPI	Solvent Cleaning
SSPC-SPIO	Near-White Blast Cleaning
SSPC-SP11	Power Tool Cleaning to Bare Metal
SSPC-VISI	Visual Standards for Abrasive Blast Cleaned Steel
SSPC-PA2	Measurement of Dry Paint Thickness with Magnetic Gauges

NACE Publication	Corrosion Data Survey compiled by Norman E. Hamner – Metals Section

B PLANT DESIGN DOCUMENTS REVIEWED IN PREPARATION OF THE ASSESSMENT

24590-BOF-3PS-C000-T0002	Rev 3	Engineering Specification for Excavation and Backfill of Underground Radioactive Waste Transfer Lines;
24590-BOF-3PS-CE01-T0001	Rev 5	Engineering Specification for Excavation and Backfill;
24590-BOF-C2-C12T-00002	Rev 5	RPP-WTP General Arrangement Plan;
24590-BOF-CS-C1-001	Rev 0	RAD Transfer Miscellaneous Details
24590-CM-HC4-HXYG-00138-01-15	Rev 00B	Subcontract Submittal
24590-HLW-M6-RLD-P0001	Rev 1	P&ID-HLW Radioactive Liquid Waste Disposal System Active Effluent Collection (Q);
24590-HLW-M6-RLD-P0002	Rev 1	P&ID-HLW Radioactive Liquid Waste Disposal System Plant Wash and Drains Vessel (Q);
24590-WTP-3PS-NWP0-T0001	Rev 1	Engineering Specification for General Welding and NDE Requirements for Supplier Fabricated Piping.
24590-PTF-3YD-PWD-00001	Rev 1	System Description for Plant Wash and Disposal System PWD and Radiation Liquid Waste Disposal System RLD
24590-PTF-M6-PWD-P0002	Rev 2	P&ID-PTF Plant Wash & Disposal System Effluent Collection
24590-PTF-M6-PWD-P0057	Rev 2	P&ID Plant Wash & Disposal System Underground Transfer Lines
24590-PTF-M6-PWD-P0058	Rev 3	P&ID Plant Wash & Disposal System Underground Transfer Lines
24590-BOF-CS-80-00062	Rev 2	RAD Transfer Lines Overall Key Plan
24590-WTP-B2-C12T-00001	Rev 0	Interface Control Drawing
24590-PTF-P1-P01T-P0008	Rev 5	Pretreatment Facility General Arrangement Section B-B;
24590-PTF-P1-P01T-P0011	Rev 6	Pretreatment Facility General Arrangement Section E-E;
24590-PTF-PER-M-02-003	Rev 1	Underground Pipe Protection
24590-QL-MRA-PS02-00008	Rev 4	Pipe Spool Fabrication-Coaxial Steel Pipe & Fittings (QL) w/attachments
24590-QL-MRA-PS02-00008	Rev 4	Material Requisition for Pipe, Spool Fabrication-Coaxial Steel Pipe & Fittings w/attachments
24590-QL-MRA-PS02-00008-S0011	N/A	Material Requisition Supplement to MR 24590-QL-MRA-PS02-00008, Rev 4(includes attachments)
24590-CM-MRA-PB08-00001	Rev 0	Material Requisition for Fittings, Pipe, Double Contained Fiberglass, w/attachments
24590-WTP-3PB-P000-TS32B	Rev 15	Piping Material Classification Pipe Class S32B
24590-WTP-3PB-P000-TW31A	Rev 7	Piping Material Classification Pipe Class W31A
24590-WTP-3PB-P000-TW32A	Rev 7	Piping Material Classification Pipe Class W32A
24590-WTP-3PB-P000-TW62F	Rev 3	Piping Material Classification Pipe Class W62F
24590-WTP-3PB-P000-TF10A	Rev 2	Piping Material Classification Pipe Class F10A
24590-WTP-3PS-AFPS-T0001	Rev 2	Shop Applied Special Protective Coatings for Steel Items and Equipment
24590-WTP-3PS-DB01-T0001	Rev 7	Engineering Specification for Furnishing and Delivering Ready Mix Concrete
24590-WTP-3PS-EQ00-T0002	Rev 3	Engineering Specification for Cathodic Protection
24590-WTP-3PS-G000-T0001	Rev 0	General Specification for Supplier Quality Assurance Program Requirements
24590-WTP-3PS-G000-T0002	Rev 7	Positive Material Identification (PMI) for Shop Fabrication
24590-WTP-3PS-G000-T0003	Rev 1	Engineering Specification for Packaging Handling, and Storage Requirements (Including Specification Change Notices 24590-WTP-3PN-G000-00001, 00003, 00010, 00014, and 00021

24590-WTP-3PS-P000-T0001	Rev 5	Piping Material General Description and Summary
24590-WTP-3PS-PB01-T0001	Rev 2	Technical Supply Conditions for Pipe, Fittings, and Flanges
24590-WTP-3PS-PS02-T0001	Rev 5	Shop Fabrication of Piping
24590-WTP-3PS-PS02-T0002	Rev 1	Engineering Specification for Cold Bending of Pipe
24590-WTP-3PS-PS02-T0003	Rev 4	Field Fabrication and Installation of Piping;
24590-WTP-3PS-PX04-T0001	Rev 1	Shop Applied Fusion Bonded Epoxy Coating for Underground Carbon Steel Pipe
24590-WTP-3PS-PS02-T0002	Rev 3	Field Repair of Shop FBE and Liquid Epoxy Coating and Field Installation of HDPE Heat Shrink Sleeves for Underground Carbon Steel Pipe
24590-WTP-3PS-PX04-T0001	Rev 2	Shop and Field Application of Epoxy Coating for Underground Carbon Steel Fittings, Valves and Special Items;
24590-WTP-DB-ENG-01-001	Rev 1C	Basis of Design (Section 14 – Environmental Basis of Design only);
24590-WTP-DC-PS-01-001	Rev 4	Pipe Stress Design Criteria including "Pipe Stress Design Criteria" and "Span Method Criteria";
24590-WTP-DC-ST-01-001	Rev 8	Structural Design Criteria;
24590-WTP-M6-50-P0001	Rev 1	P&ID SYMBOLS AND LEGEND SHEET I OF 6;
24590-WTP-M6-50-P0002	Rev 1	P&ID SYMBOLS AND LEGEND SHEET 2 OF 6;
24590-WTP-M6-50-P0003	Rev 1	P&ID SYMBOLS AND LEGEND SHEET 3 OF 6;
24590-WTP-M6-50-P0004	Rev 1	P&ID SYMBOLS AND LEGEND SHEET 4 OF 6;
24590-WTP-M6-50-P0005	Rev 1	P&ID SYMBOLS AND LEGEND SHEET 5 OF 6;
24590-WTP-M6-50-P0006	Rev 1	P&ID SYMBOLS AND LEGEND SHEET 6 OF 6;
24590-WTP-PER-J-02-002	Rev 3	Low-Point Leak Detection in Secondary Containment Systems including Buried Co- Axial Transfer Lines
24590-WTP-PER-M-02-002	Rev 1	Materials for Ancillary Equipment
24590-WTP-PER-PL-02-001	Rev 6	Piping Material class Description
24590-WTP-PER-PS-02-001	Rev 4	Ancillary Equipment Pipe Support Design
24590-WTP-VV-PS-01-001	Rev 2	Verification and Validation Test Plan/Test Report for ME101,
COGEMA-IA-015	Rev 1	WTP Below Grade Waste Transfer Lines (Secondary Containment, Ancillary Equipment, and Corrosion Assessment)
WTSC99-1036-42-17		RPP-WTP Geo- Technical Investigation Final Report, Shannon & Wilson, 2000
Bechtel National Inc. Memorandum #CCN 123298 dated June 21, 2005.	N/A	Evaluation of Underground Process Lines of Revised Ground Motion and Resolve IQRPE Issues with use of Controlled Density Fill (including copies of Ref. 1, 3, 5, and 7).

C. CHARACTERISTICS OF THE SOILS SURROUNDING THE PIPELINES AND THE RATES OF CORROSION THAT MIGHT BE EXPECTED

See "Buried Pipeline and Ancillary Equipment vs. Soil Environment Compatibility Report for Buried Pipelines at River Protection Project – Waste Treatment Plant dated August 18, 2005 attached.

D. PLANNED CORROSION PROTECTION MEASURES:

1 Impressed current cathodic protection

2 Fusion bonded epoxy coating

3. Corrosion allowance included in pipe material specification.

OR

1 Isolation of the steel pipe from contact with the soil

2 Corrosion allowance included in pipe material specification.

E: COMMENTS:

COGEMA, Inc. has provided all documents requested in completing this assessment. COGEMA personnel interviewed were fully responsive to all inquires about the subject pipelines, their operation, or the soil environment into which they are to be placed. Notwithstanding the statements or information contained herein, this assessment conducted by Corrosion Control Specialists is based on that data and information supplied by COGEMA.

F CERTIFICATION LIMITATIONS;

This certification is only for the identified pipe material, coating, and cathodic protection specified in the design documents reviewed. If the materials of construction change or if the planned operation or use is changed or if a significant structural change is made, a new assessment certification is required.

G. CORROSION INTEGRITY ASSESSMENT CERTIFICATION

I, Dennis Helgeson have reviewed, and certified a portion of a design of a new tank system or component located at the Hanford Waste Treatment Plant, owned/operated by the U. S. Department of Energy, Office of River Protection, Richland Washington. My duties, as an independent corrosion expert, were to review the design for the waste transfer piping inside the plant to determine if it was compatible with the soils at the site and would not fail as a result of corrosion damage, as required by the Dangerous Waste Regulations, namely, WAC 173-303-640(3) (a).

I certify under penalty of law that I have personally examined and am familiar with the information submitted in this document and all attachments and that, based on my inquiry of those individuals immediately responsible for obtaining the information, I believe that the information is true, accurate, and complete. I am aware that there are significant penalties for submitting false information, including the possibility of fine and imprisonment.

The undersigned is a registered professional engineer in the state of Washington.

Signature: Dennis R Helgeson Date: 8/18/05

Company: Corrosion Control Specialists
P. O. Box 5303
Kent, WA 98064
Telephone: (253) 520-3424 Fax: (253) 520-3425

ATTACHMENT B

Buried Pipeline and Ancillary Equipment Vs. Soil Environment
Compatibility Report for the River Protection Project - Waste Treatment Plant

by

Independent Corrosion Expert (ICE)

C C S **Corrosion Control Specialists**

P.O. Box 5303
Kent, Washington 98064-5303
Phone (253) 520-3424 • Fax (253) 520-3425

**BURIED PIPELINE AND
ANCILLARY EQUIPMENT
VS
SOIL ENVIRONMENT
COMPATIBILITY REPORT**

for the
River Protection Project - Waste Treatment Plant
Hanford, Washington

The U.S. Department of Energy (DOE) plans to construct a dangerous Waste Treatment Plant (WTP) at their Hanford, Washington facility. Construction of the plant is part of the DOE River Protection Project. Mixed waste will be received, pretreated, and vitrified in three primary waste treatment facilities. Waste will be transferred into the WTP, between WTP waste treatment facilities, and out of the WTP in buried piping. That transfer piping is the subject of this compatibility report. This report addresses only pipelines that will have active cathodic protection.

This report is being prepared to assure compliance with the state of Washington Department of Ecology regulation described in WAC 173-303-640(3) and its guidance 94-114.

Pipeline Design

The buried transfer piping for the WTP will be a sloped coaxial system. The coaxial system for transfer of the waste is made up of a carrier pipe made of 316L stainless steel to contain the waste. That carrier pipe will run inside an encasement pipe that is made of carbon steel. The encasement pipe is a secondary containment system in the event of a leak from the carrier pipe. The encasement pipe also isolates the carrier pipe from corrosion by the surrounding soils. The encasement pipes are to be 6-inch diameter Schedule 40 carbon steel. The pipe will have a nominal wall thickness of 0.280 inches. A leak detection system is incorporated into the pipeline design to provide an alarm in the event of a leak. The exterior of the encasement pipe is to be coated with a factory applied fusion bonded epoxy (FBE). The FBE is a primary method of corrosion control by isolating the pipe from contact with the soil. Specifications for the coating and its application are described in Bechtel documents 24590-WTP-3PS-PX04-T0001, Rev 1 and 24590-WTP-3PS-PX04-T0004, Rev 0. The specification for the WTP recognizes that the FBE may not be 100 percent effective and calls for the installation of cathodic protection to

supplement it. Details of the Bechtel's plan for cathodic protection are described in their documents 24590-WTP-3PS-EQ00-T0002, Rev 3 and 24590-WTP-3YD-CPE-00001, Rev C.

The drawings 24590-PTF-M6-PWD-P0057 and -P0058 identify the transfer pipelines that are the subject of this report. All of the pipelines shown on these drawings are within the scope of this report. Several of the transfer lines from the Hanford Tank Farms to the Pretreatment Facility (FRP-PZ-01749-W62F-03, FRP-PZ-01750-W62F-03, and FRP-PZ-01751-W62F-03) are excluded from the cathodic protection engineering specification, and are therefore not the subjects of cathodic protection discussed in this report Moreover the lines RLD-ZS-03383-F10-03 and RLD-ZS-03382-F10A-04 are excluded because they no metallic parts are in contact with the soil. This report considers the metallic pipe that makes up the transfer piping at the WTP. It does not address any FRP piping nor does it address any steel piping that is isolated from the soil environment by encasement in high-density polyethylene pipe.

The compatibility of the carrier pipe with the wastes being transferred inside it is not the subject of this report. That compatibility is the responsibility of others. Any corrosion that might occur in the annular air space between the carrier pipe and the encasement pipe should be minimal to nil but that compatibility evaluation is also the responsibility of others.

This report is to evaluate if the FBE coating and cathodic protection system make the encasement pipe compatible with the soils at the site.

A detailed description of the make up of the piping network at the WTP is described in the following Bechtel documents:

24590-BOF-3PS-CE01-T0001, Rev. 5	Engineering Specification for Excavation and Backfill
24590-BOF-3PS-C000-T0001, Rev 3	Engineering Specification for Excavation and Backfill of Underground Radioactive Waste Transfer Pipelines
24590-WTP-PER-J-02-002, Rev. 3	Low-Point Detection in Secondary Containment Systems including Buried Co-axial Transfer Lines
24590-PTF-PER-M-02-003, Rev. 1	Underground Piping Protection
24590-WTP-3PS-P000-T0001, Rev 5	Piping Material Classes General Description
24590-WTP-3PS-NWP0-T0001, Rev. 1	Engineering Specification for General Welding and NDE Requirements for Supplier Fabricated Piping
24590-WTP-3PS-PB01-T0001, Rev. 2	Engineering Specification for Technical Supply Conditions for Pipe, Fittings, and Flanges
24590-WTP-3PS-PS02-T0001, Rev. 5	Engineering Specification for Shop Fabrication of Piping
24590-WTP-3PS-PS02-T0002, Rev. 1	Engineering Specification for Cold Bending of Pipe

Corrosion Control Specialists
Kent, WA

COGEMA Engineering
Subcontract C-02-G-E2-0001

24590-WTP-3PS-G000-T0002, Rev. 7 — Engineering Specification for Positive Material Identification (PMI) for Shop Fabrication

Soil Environment

To evaluate the relative corrosion performance of different soils a number of properties of the soil are evaluated. The principal properties evaluated are outlined in WAC 173-303-640(3)(a)(iii)(A)(I-VIII) to include:

(I) Soil moisture content
(II) Soil pH
(III) Soil sulfides level
(IV) Soil resistivity
(V) Structure to Soil Potentials
(VI) Influence of nearby underground metallic structures
(VII) Existence of stray electric currents
(VIII) Existing corrosion protection methods

The moisture content of soils at the WTP site varies seasonally between 2-4 %. The pH of the soils recently measured at the site ranged from 5.84 to 7.94 with an average of 6.88. Sulfates and chlorides measured at the site were below detectable limits or below any threshold that would impact corrosion of carbon steel. In-situ soil resistivity ranged from 14,300 to 143,000 ohm-cm with an average of 61,300 ohm-cm. Laboratory testing indicated resistivity between 61,000 and over a million ohm-cm. In as much as this is a planned facility no structure to soil potentials have been recorded. The site for the WTP is near the 200 East area and evaluation of the nearby buried tanks are a consideration as well as any stray current that might result from cathodic protection of those tanks. Interaction between cathodic protection systems in the 200 East Area and cathodic protection systems at the WTP site would be a design consideration for waste transfer lines routed between the sites. A summary of all the soil properties is tabulated and discussed in the Shannon & Wilson Report WTSC99-1036-42-17.

Other Corrosion Considerations

The corrosion of steel in soils is an electrochemical process and not just chemical interaction of the soil with the metal. The electrochemical theory is that four elements are necessary for corrosion to occur. The four elements are anodes on the metal surface, cathodes on the metal surface, a metallic path between the anode and cathode (the metal itself) and an electrolyte (soil). This model of corrosion is referred to as a corrosion cell. If all four elements are present, direct current flows from the anode areas into the soils, through the soil and onto the cathode areas, and through the metal back to the anode. Anodes and cathodes occur on the metal surface caused by a wide variety of reasons including:

Alloying of the metals
Differential aeration of the soil

Different resistively of the electrolyte
Cold working of metal surface
Coupling of two different metal in the electrolyte
Welded areas vs. un-welded areas of metal surface
Coated or un-coated areas of metal surface
Stray Current

Many of these conditions are present for the intra plant-piping network planned for this WTP site. The encasement pipe as specified is alloyed carbon steel creating the initial anode – cathodes cells. The FBE coating specified is an excellent coating and tight quality control is planned for factory application. However the coating will still have some holidays that go undetected and the coating will experience some undetected nicks and scrapes during installation. Additionally the piping will be inter-tied with valves, pumps, leak detection probes, etc which will be made up of different metals creating galvanic couples. Moreover field coating of the weld joints cannot fully match the quality achieved at the factory. Further the piping in the plant may pass under roads or paved areas in one area while in other areas in may be under native soil. Areas under the paved areas will have reduced moisture content and lower aeration content than the native soil areas. The encasement clearly will experience corrosion by interaction with the soil environment.

Discussion

The Table shown below was published as part of the National Association of Corrosion Engineers (NACE) Basic Corrosion Course. It is intended to be a guideline of possible corrosion in homogenous soil. Considering the soil conditions at the WTP described above, the soils would be classified as only progressively less corrosive to carbon steel.

Rough Indications of Soil
Corrosivity vs. Resistivity

Ohm-cm	Description
Below 500	Very corrosive
500-1,000	Corrosive
1,000-2,000	Moderately corrosive
2,000-10,000	Mildly corrosive
Above 10,000	Progressively less corrosive

If one uses it as a guide for the WTP, it suggests the WTP would expect very little corrosion of buried metals at the site. However, since the resistivity at the site is not homogenous but rather is heterogeneous, the different corrosion cells created by different resistivities at the site will increase corrosion above that indicated by the above table.

A NACE publication "Corrosion Data Survey" has compiled empirical historical data on corrosion rates of carbon steel in various soil resistivities. From this information we find a range of corrosion rates for the resistivity at the WTP. Corrosion rates could be less than 2 mils per

year to as high as 10 mils per year. If this relative guide were used we would expect serious damage from anywhere from 15 to 70 years. Since most of the resistivity data is well above the 10,000 ohm-cm level it more likely closer to the 70 years than 15. However this determination of corrosion rates is subjective based on the experience of the corrosion engineer. Neither use of this approach nor the table above provides a satisfactory way for determining compatibility of the piping network at the WTP site.

If it were known the metals were buried in a homogenous soil then laboratory testing could be conducted to determine a more objective prediction of corrosion rates. The laboratory approach would be to complete a linear polarization curve to determine the polarization resistance. Then, the data would be combined with the electrochemical constant and the surface area of the test sample in an equation that results in corrosion rates in mils per year. However non-uniform soils are present at the site, thus preclude use of this approach. Moreover the pipelines on the site will be subjected to some increased corrosion as indicated by the other corrosion consideration noted above. The corrosion impact of these factors would be left out of any corrosion rate calculation.

The determination in this case as in most soils leaves the expected corrosion rates determination to a subjective determination of a corrosion engineer based on his experience. Even if a corrosion rate for the WTP site could be defined, the other information needed to determine the pipe-soil compatibility is the planned life of the pipelines. The amount of waste to be processed at the WTP and the time needed to process the waste are just estimates. Therefore with only a rough indication corrosion rate in these soils and a planned design life of 40 years for the WTP corrosion mitigating measures are required to assure pipe-soil compatibility.

The methods available to mitigate corrosion cells include the following:

1 Remove or insulate the electrical path between anodes and cathodes
2 Change or treat the soil
3 Isolate the pipe from the soil.
4 Apply anodic or cathodic protection

The first two approaches are not practical for any buried piping network. The most common method of accomplishing the third approach is to apply a non-conductive coating to the pipeline surface. A good coating system effectively isolates nearly all the pipe from the soil. However pinholes and holidays may exist in most coatings and some metal will remain in contact with the soil. Some corrosion can be expected to continue. Anodic protection is impractical for a buried pipeline system A correctly designed and operated cathodic protection system will effectively mitigate all corrosion on the pipeline by sacrificing another material (anode) that is remote from the metal surface. With an effective cathodic protection system installed at the WTP, there wouldn't be any corrosion of the pipeline and it would be considered compatible with the soil.

Applying cathodic protection to a bare steel pipeline results in high installation cost and high operating expenses. Good engineering practice is to apply a coating to the pipeline and also install cathodic protection. The cost of installing and operating a cathodic protection system for a coated pipeline is 5% or less of that required for a bare pipe. The cathodic protection system for a coated pipeline is protecting just the pinholes or holidays in the coating that comes in contact

with the soil. The WTP plan calls for this approach of applying cathodic protection to a coated piping network. This plan for the WTP piping is good engineering practice. The question remains is does the coating system specified and the cathodic protection specified adequate to make the pipelines at the WTP compatible with the site soils?

The selection of FBE coating for the WTP is an excellent choice for this application because it is environmentally compatible with the soils and will provide an excellent barrier between the pipe and soil with the minimum of holidays. The FBE coating called out in the project specifications is of the highest quality. The specification outlines excellent application procedures. The specification requires detailed inspection procedures for quality control for application of the coating. Moreover the storage, handling and shipping procedures for the pipe in route to the WTP site should ensure the pipe is placed in the ground in excellent condition.

The cathodic protection system specification for the WTP requires the quality of all system components to be met with the national standards by the designer. It provides the designer with direction on what installation practices may be used at the site. It requires the designer establish quality assurance procedures for the design, procurement, and installation of the system. A cathodic protection system designed and installed in accordance with the specification will provide a system that will mitigate all corrosion of the pipelines at the WTP.

In my professional opinion that if the piping is coated with FBE in accordance with the specification and is cathodically protected in accordance with the specification the pipelines will be compatible with the soils at this WTP.

Dennis R. Helgeson, P. E.
Corrosion Specialists # 2736

8/18/05
Date

RECEIVED
AUG 19 2005
BNI-Subcontracts

AREVA

COGEMA-05-0124

Mr. Tim Maynes
Subcontract Administrator
Acquisition Services
Bechtel National, Inc.
2435 Stevens Center Place
Richland, Washington 99352

August 19, 2005

Dear Mr. Maynes:

BECHTEL NATIONAL, INC. CONTRACT NO. 24590-CM-HC4-HXYG-00138 - STRUCTURAL INTEGRITY ASSESSMENT OF THE WASTE TREATMENT PLANT (WTP) UNDERGROUND TRANSFER LINES AND ANCILLARY EQUIPMENT (COGEMA-IA-015, REV. 2)

The integrity assessment of the subject underground transfer lines and ancillary equipment has been completed per the contract requirements and is enclosed for your use. The assessment found that the design is sufficient to ensure that the underground transfer lines and ancillary equipment are adequately designed and have sufficient structural strength, compatibility with the waste(s) to be processed/stored/treated, and corrosion protection to ensure that they will not collapse, rupture, or fail.

If you have any questions, please contact Tarlok Hundal at (509) 373-4438, or via facsimile at (509) 372-0504.

Sincerely,

E. A. Nelson, Director
Engineering & Technology
COGEMA, Inc.

llm

Enclosure

cc: D. C. Pfluger (2) MS4-E2 w/enclosure

~~24590-CM-HC4-HXYG-00138-02-00056 Rev 02A~~
DY. 8-19-05

COGEMA, INC.
2425 Stevens Center Place, Second Floor, Richland, Washington 99354 - P.O. Box 840, Richland, Washington 99352
Tel.: 509 372 8256 - Fax: 509 372 3169 - www.areva.com

Attachment 51 – Appendix 7.12

WTP Common
Installation Plans

The following drawings have been incorporated into Appendix 7.12 and can be viewed at the Ecology Richland Office. **New drawings are in bold lettering.**

Drawing/Document Number	**Description**
24590-WTP-PER-CON-02-001, Rev 5	Installation of Tank Systems & Miscellaneous Unit Systems
24590-WTP-PER-M-06-001, Rev 0	**Tank System and Miscellaneous Unit System Piping Weld Nondestructive Examination Requirements**
RESERVED	RESERVED

R10504677

Document title: **Installation of Tank Systems and Miscellaneous Unit Systems**

Contract number: DE-AC27-01RV14136

Department: Construction

Author(s): W Melvin

Principal author signature: W. T. Melvin

Document number: 24590-WTP-PER-CON-02-001, Rev 5

Checked by: Simon Wright

Checker signature: S Wright

Date of issue: 4/6/05

Issue status: Approved

Approved by: James T. Minor

Approver's position: Field Engineering Manager

Approver signature: James T Minor PE 4/19/05

JAMES T. MINOR
STATE OF WASHINGTON
14880
REGISTERED
PROFESSIONAL ENGINEER
EXPIRES 5/5/06

4/19/05

This bound document contains a total of 11 sheets

James T Minor 4/19/05
Signature Date

River Protection Project
Waste Treatment Plant
2435 Stevens Center Place
Richland, WA 99352
United States of America
Tel: 509 371 2000

History Sheet

Rev	Date	Reason for revision	Revised by
0	9 Aug 2002	Initial issue; Issued For Permitting Use	W Melvin
1	13 March 2003	Incorporation of Washington State Department of Ecology Comments, CCN 048713	W Melvin
2	10 Dec 2003	Incorporation of miscellaneous treatment equipment	W Melvin
3	10 Nov 2004	Incorporate vacuum box testing; Replaced MRI with MAP for receipt inspection; Miscellaneous non-technical changes for clarity. Replaced WAC references with the appropriate permit condition references.	W Melvin
4	1/2705	Incorporate Washington Department of Ecology Comments	W Melvin
5	5 April 2005	Referenced DOE documents that affect ASME B31.3	W Melvin

Acronyms and Abbreviations

ASME	American Society of Mechanical Engineers
AWS	American Welding Society
CDR	Construction Deficiency Report
CM	Commercial Grade
IQRPE	Independent, Qualified, Registered, Professional Engineer
MAP	Material Acceptance Plan
MRI	Material Receipt Instruction
NCR	Nonconformance Report
NDE	Non-Destructive Examination
PADC	Project Archives and Document Control
QL	Quality Program Applicable
WTP	Hanford Tank Waste Treatment and Immobilization Plant

Contents

Acronyms and Abbreviations iii
1 Introduction 1
1.1 Applicable Documents 1
2 Description 2
2.1 Receipt Inspection, Rigging, and Installation 2
2.2 Inspection 3
2.3 Control of Discrepancies 4
2.4 Testing 5
2.5 Certification of Construction 5
3 Summary 6

1 Introduction

This document describes how the Hanford Tank Waste Treatment and Immobilization Plant (WTP) will satisfy the following Permit Conditions:

Note: Miscellaneous unit systems are defined in Permit Conditions III.10.G., III.10.H., III.10.I., III.10.J., and III.10.K.

- Permit Condition III.10.E.3.a. for the installation of secondary containment of tank systems
- Permit Conditions III.10.E.3.a. through c. and e. for the installation of tanks
- Permit Conditions III.10.E.3.a. through e. for the installation and testing of tank system ancillary equipment
- Permit Conditions III.10.E.5.b. and III.10.E.9.d.x. for the installation and testing of tank system process, control and leak detection instrumentation

- Permit Conditions III.10.G.3.a., III.10.H.1.a.iv. and III.10.J.1.a.iv. for the installation of secondary containment of miscellaneous unit systems
- Permit Conditions III.10.G.3.a. through c. and e., III.10.H.1.a.iv. through vi. and viii., and III.10.J.1.a.iv. through vi. and viii. for the installation of miscellaneous units/sub-systems
- Permit Conditions III.10.G.3.a. through e., III.10.H.1.a.iv. through viii. and III.10.J.1.a.iv. through viii. for the installation and testing of miscellaneous unit system equipment/sub-system equipment
- Permit Conditions III.10.G.5.b., III.10.G.10.d.x., III.10.H.1.a.xiv., III.10.H.5.d.x., III.10.I.1.a.viii., III.10.J.1.a.xiv., III.10.J.5.d.x., and III.10.K.1.a.viii. for the installation and testing of miscellaneous unit system process, control and leak detection instrumentation

Miscellaneous unit systems and tank systems are heretofore referred to as *regulated plant items*.

1.1 Applicable Documents

ASME Section VIII, *Pressure Vessels.*

ASME B 31.3 –, *Process Piping. (As tailored in 24590-WTP-SRD-ESH-01-001-02, Safety Requirement Document, Volume II, as amended, Appendix, C , Section C.26, which is not a permit affecting document.)*

ASME Section IX, *Qualification Standard for Welding and Brazing Procedures, Welders and Brazers and Welding and Brazing Operators.*

AWS D1.1, *Structural Welding Code – Steel.*

WAC, Chapter 173-303, *Dangerous Waste Regulations.*

2 Description

2.1 Receipt Inspection, Rigging, and Installation

The following is a list of activities that prevent defects in regulated plant items during receiving, installation, and testing. Construction installation and inspection records are generated in accordance with project or vendors' procedures to document work processes. For the purpose of this document, they are referred to as the *Field Installation Report*. This term is consistent with the permit.

2.1.1 Receipt Inspection

A material acceptance plan (MAP) is generated based on key attributes that require independent verification. The MAP is developed from approved technical requirements taken from applicable codes, specifications, drawings, standards and other similar sources specific to the specific material requisition/ purchase order. Examples of requirements that may be found in a MAP include the following:

- specific attributes/activities that require independent verification
  - material type/grade/class/color/finish
  - equipment type/rating/class/capacity/manufacturer
  - manufacturing methods/process/controls
  - size/shape dimensions.
- identify hold/witness points
- identify specific acceptance criteria for defined attributes/activities directly or by reference
- proper identification of materials and regulated plant Items
- storage levels and any special requirements or conditions associated with receiving, handling and storage

2.1.2 Rigging:

- rigging instructions are generated, when applicable, and ensure the following requirements are met:
  - rigging equipment is of sufficient rating to perform the lift
  - regulated plant items are lifted in accordance with manufacturer's instructions when provided. When the vendor does not provide specific rigging instructions BNI standard rigging practices are employed.
- rigging equipment is examined periodically and required maintenance is performed to ensure proper function.

2.1.3 Installation

Installation of regulated plant items and materials are documented on field installation/inspector reports. Activities that will have field installation/inspector reports generated include the following:

- concrete placement, cure and finishing
- equipment installation/alignment
- installation of pipe/pipe supports
- welding activities
- bolt torquing
- coating system installation
- sub-grade and foundation materials and compaction
- rebar, embed, and anchor placement
- installation of liner plate
- installation of corrosion protection systems
- placement of shop and field fabricated tanks and miscellaneous units
- regulated plant items support installation
- instrument sensing lines and support installation
- regulated plant items and instrument identification

Regulated plant items and materials are inspected for physical damage at the time of installation.

Protective boxes, welding blankets, and access control are used, as necessary, to protect regulated plant items and materials from damage during construction and testing.

2.2 Inspection

Inspections of regulated plant item installations are performed by persons qualified to perform the inspections. Inspections are performed prior to the work being covered, enclosed, or placed in use. Inspections are documented on the field installation reports. The inspector's signature indicates compliance with the requirements.

Inspections are performed and documented to the current design at the time of inspection.
Current design is constituted by documents issued for construction; these include, but are not limited to the following:

- BNI approved vendor drawings
- BNI approved vendor installation manuals
- BNI approved vendor rigging instructions
- piping isometric drawings
- support drawings
- equipment location drawings
- concrete placement drawings
- embedded plate detail and location drawings
- instrument installation details
- approved interim design changes

Installation activities that are inspected include, but are not limited to, the following:

- sub-grade and foundation materials and compaction
- rebar, embed, and anchor placement
- concrete placement, cure, and finishing
- installation of liner plate
- installation of corrosion protection systems
- placement of shop and field fabricated tanks and miscellaneous units
- welding activities
- bolt torquing
- regulated plant items support installation
- instrument sensing lines and support installation
- regulated plant items and instrument identification
- equipment installation/alignment
- coating system installation
- installation of pipe/pipe supports

Field installation reports are reviewed for accuracy and completeness. Retention of field installation reports is performed in accordance with Project Archives and Document Control (PADC) controls and procedures.

2.3 Control of Discrepancies

Discrepancies found during receipt, installation, and test inspections are documented in a *nonconformance report* (NCR) for items identified as QL (Quality Program Applicable) and a *construction deficiency report* (CDR) for items identified as Commercial Grade (CM). An NCR/CDR provides the following:

- a detailed description of the discrepancy
- a description of the requirement
- a disposition to correct the discrepancy
- appropriate approvals of the disposition
- confirmation that the disposition has been completed

Hold tags are applied when appropriate to the discrepant item to prevent it from being covered, enclosed, or placed in use until the discrepancy has been remedied. Any discrepancies will be remedied prior to the regulated plant item being covered, enclosed, or placed in use. [Permit Conditions III.10.E.3.a. and c., III.10.G.3.a. and c., III.10.H.1.a.iv. and vi., and III.10.J.1.a.iv. and vi.].

NCRs/CDRs with a final disposition of "Use As Is" or "Repair" that affect critical systems are provided to the Washington Department of Ecology within five (5) calendar days in accordance with Permit Condition III.10.C.9.d.

Closed NCRs/CDRs are retained in PADC.

2.4 Testing

Tightness testing is performed in accordance with the design and installation code applicable to the regulated plant item. Testing is performed and inspected by persons competent in the performance of the applicable test (e.g. hydrostatic, pneumatic or vacuum box testing). Testing is documented to provide a record that the system or regulated plant item was tested for the prescribed period and fully inspected for leakage.

Process and control instrumentation for WTP regulated plant items will be commissioned after installation. Commissioning will be performed using procedures that implement vendor technical guidance. Calibration procedures are written, reviewed, and approved to satisfy the program controls contained in WTP administrative procedures. If required, a loop calibration check will be performed to verify the proper instrument output to the WTP distributed control system. Similar to instrument calibrations, the instrument loop calibration check procedures will satisfy vendor guidance and WTP administrative controls.

2.5 Certification of Construction

2.5.1 Independent Inspector

Prior to covering, enclosing, or placing new regulated plant item(s) in use, an independent, qualified, installation inspector or and independent, qualified, registered professional engineer (IQRPE), either of whom is trained and experienced in the proper installation of regulated plant items, shall have inspected the system for the presence of any of the following items [Permit Conditions III.10. E.3.a. and c., III.10.G.3.a. and c., III.10.H.1.a.iv. and vi., and III.10.J.1.a.iv. and vi].

- weld breaks
- punctures
- scrapes of protective coatings
- cracks
- corrosion
- other structural damage or inadequate construction/installation

The following documentation (available in PADC) is considered by the independent qualified installation inspector, or IQRPE, in certifying proper installation of regulated plant items [Permit Conditions III.10.E.3.g., III.10.G.3.g., III.10.H.1.a.x., and III.10.J.1.a.x.]:

- field installation reports (previously listed Section 2.1)
- approved welding procedures
- welder qualifications and certifications
- tightness test reports in accordance with the codes specified by design
- tester credentials

- inspector credentials
- field inspector reports (previously listed in Section 2.1)
- field waiver reports (i.e.,NCRs, CDRs),
- non-compliance reports, corrective action and repair reports (i.e., NCRs, CDRs)

Procedures for excavation and backfill, concrete placement and system turnover to commissioning and test will have controls to ensure that the independent qualified installation inspector or IQRPE has performed installation inspections and inspections to confirm that discrepancies have been remedied before the regulated plant item is covered, enclosed or placed in use.

2.5.2 Corrosion Protection Inspection

Installation of the field fabricated cathodic protection system for the underground transfer piping will be supervised by a independent corrosion expert to ensure proper installation [Permit condition III.10.E.3.e].

2.5.3 Certification of Construction

Certified written statements from the independent qualified installation inspector or IQRPE and from the independent corrosion expert will be obtained attesting that the regulated plant items and field fabricated cathodic protection system were properly installed and any repairs were performed [Permit Conditions III.10.E.1.d, III.10.G.1.d., III.10.H.1.a.iii., III.10.I.1.a.iv., III.10.J.1.a.iii., and III.10.K.1.a.iv.].

The written statements will be maintained and available in the WTP Unit Operating Record [Permit Conditions III.10.E.3.f., III.10.G.3.f., III.10.H.1.a.ix., and III.10.J.1.a.ix.].

3 Summary

Tank systems and miscellaneous unit systems are installed in accordance with the applicable engineering documents and manufacturer's installation instructions. Special instructions for installation requirements that are not skill of the craft will be provided in a field installation report developed from the engineering documents or manufacturer's instructions or BNI standard practices or a combination of all. Field installation/inspectors reports, when completed, document the inspections necessary to ensure the quality installation of the regulated plant items.

Installation and/or process instructions will include the following, where applicable:

- rigging instructions
- step-by-step assembly instructions
- welding procedures and conditions

- coatings system installation
- tightness testing
- instructions to prevent damage to the regulated plant item during construction and startup

Installation activities ensure that required inspections by construction inspectors and the independent qualified installation inspector, or IQRPE, are performed before the regulated plant item to be inspected becomes covered, enclosed, or placed in use.

R10708271

Document title:

Tank System and Miscellaneous Unit System Piping Weld Nondestructive Examination Requirements

Contract number: DE-AC27-01RV14136

Department: Mechanical & Process Engineering Design Support

Author(s): S. W. Vail

ISSUED BY
RPP-WTP PDC

Principal author signature:

Document number: 24590-WTP-PER-M-06-001, Rev 0

Checked by: H. Krafft

Checker signature:

Date of issue: September 15, 2006

Issue status: Issued for Review

Approved by: M. W. Hoffmann

Approver's position: M&PE Design Support Lead

Approver signature:

STEVEN WAKEMAN VAIL
STATE OF WASHINGTON
39250
REGISTERED
PROFESSIONAL ENGINEER

9/15/06

EXPIRES: 12/07/07

River Protection Project
Waste Treatment Plant
2435 Stevens Center Place
Richland, WA 99354
United States of America
Tel: 509 371 2000

This bound document contains a total of 11 pages.

Notice

Please note that source, special nuclear, and byproduct materials, as defined in the Atomic Energy Act of 1954 (AEA), are regulated at the US Department of Energy (DOE) facilities exclusively by DOE acting pursuant to its AEA authority. DOE asserts, that pursuant to the AEA, it has sole and exclusive responsibility and authority to regulate source, special nuclear, and byproduct materials at DOE-owned nuclear facilities. Information contained herein on radionuclides is provided for process description purposes only.

History Sheet

Rev	Date	Reason for revision	Revised by
0	September 15, 2006	Issue for Permitting	S.W. Vail

Contents

Notice ii
History Sheet iii
Acronyms v
1 Introduction 1
2 Applicable Documents 1
3 Requirements 1
3.1 Secondary Containment Liner Plate Penetrations 1
3.2 Examination of Pipe Welds 1
3.3 Closure Welds 2

Appendices

Appendix A - Scope of Nondestructive Examination (NDE) for Tank System and Miscellaneous Unit System Piping Welds A-1

Acronyms

API	American Petroleum Institute
ANSI	American National Standards Institute
ASME	American Society of Mechanical Engineers
CDR	Construction Deficiency Report
HLW	High Level Waste
ITS	Important to Safety
NDE	Nondestructive Examination
MT	Magnetic Particle Examination
NCR	Nonconformance Report
PJM	Pulse Jet Mixer
PT	Liquid Penetrant Examination
PTF	Pretreatment Facility
RT	Radiographic Examination
UT	Ultrasonic Examination
VT	Visual Examination
WTP	Waste Treatment and Immobilization Plant

1 Introduction

The Note following Washington Administrative Code (WAC) section 173-303-640(3)(f) states that:

> The piping system installation procedures described in American Petroleum Institute (API) Publication 1615 (November 1979), "Installation of Underground Petroleum Storage Systems," or ANSI Standard B31.3, "Petroleum Refinery Piping" and ANSI Standard B31.4 "Liquid Petroleum Transportation Piping System" may be used, where applicable, as guidelines for proper installation of piping systems.

Later issues of these ANSI standards were issued as ASME piping codes as ANSI was reorganized as an accrediting organization for standards and codes prepared by other organizations.

The purpose of this document is to define the non-destructive examination (NDE) requirements for the fabrication and installation of tank and miscellaneous unit system piping in the Waste Treatment and Immobilization Plant (WTP) that are consistent with or exceed those specified in ASME B31.3-1996.

2 Applicable Documents

2.1 ASME B31.3 - 1996, Process Piping

2.2 Washington Administrative Code (WAC), 173-303-640 – Dangerous Waste Regulations, Tank Systems

3 Requirements

3.1 Secondary Containment Liner Plate Penetrations

Where piping penetrates the secondary containment liner plate, the liner plate-to-piping weld shall be made to the requirements of ASME B31.3-1996. See Appendix A for the NDE requirement for the weld. The liner plate material, design, fabrication, installation, and nondestructive examination (NDE) requirements are specified in the liner plate specification and design drawings and are outside the scope of this document.

3.2 Examination of Pipe Welds

WTP Project site NDE procedures, acceptance criteria, and examination of completed tank and miscellaneous system pipe pressure boundary welds shall be in accordance with ASME B31.3-1996 requirements for Normal Fluid Service conditions. The additional requirements in Appendix A of this document shall also apply. Any deviations shall be documented on Nonconformance Reports (NCRs) or Construction Deficiency Reports (CDRs), or Supplier Deviation Disposition Requests (SDDRs).

Weld repairs shall be examined according to the requirements applied to the original weld.

3.3 Closure Welds

Hydrostatic testing in accordance with ASME B31.3-1996, para. 345.4, pneumatic testing in accordance with para. 345.5, or an alternative leak test in accordance with para. 345.9 shall be performed prior to start-up to ensure the piping is leak tight. An exception to this requirement may be invoked for closure welds provided they meet the requirements of ASME B31.3c-1998 Addendum, para. 345.2.3(c), and all the following criteria:

a) Weld is a full penetration butt weld in straight pipe, full penetration butt weld at the safe end of an equipment nozzle, or full penetration butt weld to safe end of a branch connection. (The safe end is defined as the piping to equipment nozzle connecting weld or branch connection to branch connecting weld)

b) The weld connects piping subassemblies or components that have been successfully leak tested in accordance with ASME B31.3-1996, para. 345.

c) In-process examination of the weld is performed in accordance with ASME B31.3-1996, para. 344.7, as follows:

1. Joint preparation and cleanliness;
2. Preheating;
3. Fit-up, joint clearance, and internal alignment prior to joining;
4. Variables specified by the joining procedure, including filler material, position, and electrode;
5. Condition of root pass after cleaning-external and, where accessible, internal (not required for orbital welding)
6. Slag removal and weld condition between passes (not required for orbital welding)
7. Appearance of the finished joint.

Note: For welds made using the automated orbital welding process, indications that can result from slag inclusion, incomplete fusion, etc. are almost nonexistent or indiscernible using visual inspection methods. Radiographic or ultrasonic examination should identify any indications in welds made using the orbital welding process that would be detected by visual inspection. Therefore, in-process examination elements 5 and 6 above are determined to be not applicable for orbital welding, and are exempted as allowed under ASME B31.3-1996 Edition, para. 344.7.1.

d) The weld passes 100% radiographic examination or 100% ultrasonic examination. See Appendix A for acceptance criteria.

e) Piping welds and the associated line numbers for which the closure weld classification is invoked shall be documented.

Appendix A - Scope of Nondestructive Examination (NDE) for Tank System and Miscellaneous Unit System Piping Welds

Application of ASME B31.3-1996 *to WTP Piping*								
Fluid Service Category →	**Category D**	**Normal**						
							Dual Containment	
Type of Weld ↓		**Less than Class 1500**	**Class 1500 and Greater**	**Tubing Inside Black Cell (Pipe Class S11H)**	**Piping Inside Black Cells [4] (Process) [11]**	**Piping Inside Black Cells [4] (Non-Process) [11]**	**Inner Piping**	**Jacket Piping**
Girth and Miter Welds	100% VT	100% VT 5% RT [5] or UT [8]	100% VT 100% RT [5] or UT [8]	100% VT 100% RT [1] or UT [8]	100% VT 100% RT [1] or UT [8]	100% VT 100% RT [5] or UT [8]	100% VT 100% RT [1] or UT [8]	100% VT 5% RT [3] or UT [3, 8]
Shop and Field-Welded Longitudinal Welds [12]	N/A	N/A	N/A	N/A	N/A	N/A	N/A	100% VT 5% RT [3] or UT [3, 8]
Fillet Welds Including Socket Welds [6], Integral Support Welds [7], and Liner Plate-to-Piping Weld [7, 10]	100% VT	100% VT	100% VT	N/A	100% VT 100% PT/MT [2, 6]	100% VT 100% PT [2, 6]	100% VT 100% PT/MT [2]	100% VT
Branch Connection Welds (e.g., Weldolets)	100% VT	100% VT	100% VT	N/A	100% VT 100% PT [2] 100% RT [1]	100% VT 100% PT [2] 100% RT [1]	100% VT 100% PT/MT [2]	100% VT

Legend:

RT = Radiographic Examination PT/MT = Liquid Penetrant or Magnetic Particle Examination VT = Visual Examination UT = Ultrasonic Examination

N/A = Not Applicable

Notes:

[1] The radiographic acceptance criteria for normal fluid service apply, except that incomplete penetration and internal undercut are not permitted.

[2] The liquid penetrant examination and magnetic particle examination acceptance criteria are no cracks are permitted. Magnetic particle examination shall be performed with ASME B31.3

para. 344.3. Liquid penetrant examination shall be performed in accordance with ASME B31.3 para. 344.4.

[3] When approved by Engineering, individual coaxial pipe jacket welds requiring 5% random RT or UT may, on a case-by-case basis, be examined by in-process examination in accordance with ASME B31.3, paras. 341.4.1 and 344.7 with VT of the root pass per para. 344.7.1(e). This substitution cannot be granted across the board for a whole job.

[4] Black cells are enclosed cells of the facility where inspection, maintenance, repair, or replacement of equipment or component is impracticable because no engineered openings are provided for any of those purposes. The room numbers (and the corresponding planning area location) of the black cells, located in the Pretreatment Facility (PTF) and High Level Waste (HLW) Facility are:

PTF Building

Room Number	Planning Area Location
P-0102, P-0102A	4
P-0104	3
P-0106	2
P-0108, P-0108A, P-0108B, P-0108C	1
P-0109	7
P-0111	8
P-0112	9
P-0113	10
P-0114	11
P-0117, P-0117A	13

HLW Building

Room Number	Planning Area Location
H-B005	02B
H-B014	01
H-B021	02A

The room numbers above constitute the black cells.

For the HLW Facility: Where pipe spool crosses black cell boundary limit, the isometric will have flags to show this boundary.

[5] The radiographic acceptance criteria for normal fluid service applies except that incomplete penetration is not permitted.

[6] There are no socket welds in piping inside the black cells. Exception: Fillet welds on radar level detection cone assemblies and thermowell to vessel nozzles which shall be 100% VT and PT examined.

[7] Welding of integral supports shall be avoided in previously hydrostatically or pneumatically tested piping. Engineering shall be consulted immediately when this situation occurs.

[8] Ultrasonic examination techniques shall be performed with automated devices. The use of manual or semi-automated scanning devices shall be subject to the evaluation and approval of a Bechtel UT level III. UT acceptance criteria shall be in accordance with Note 9.

[9] Imperfections which produce a response greater than 20% of the reference level shall be investigated to the extent that the operator can determine the shape, identity, and the location of all such imperfections and evaluate them in terms of the acceptance standards given in (A) and (B) following:

(A) Indications characterized as cracks, lack of fusion, or incomplete penetration are unacceptable regardless of length.

(B) Other imperfections are unacceptable if the indication exceeds the reference level amplitude and have lengths which exceed:

¼ inch for t up to ¾ inch, and ⅓t for t from ¾ inch to 2 ¼ inch; where "t" is the thickness of the weld, or thinner of the two materials being joined.

[10] In lieu of the NDE per the table, the finished liner plate-to-piping weld shall be 100% VT and PT inspected. The acceptance criteria shall be no linear indications or relevant rounded indications (indications where the major dimension is the lesser of t / 3 or 1/8 inch) are allowed.

[11] Black cell piping includes incell piping up to and including the incell interface weld between a vendor's supplied piece of through wall equipment (such as a double wall pipe, joggle pipe, shadow box, floor box, wall box, rack, or jumper nozzle platform) and the black cell piping. For all piping that extends from inside a black cell and is not welded directly to a vendor supplied piece of through wall equipment, the requirements for black cell piping shall be applicable up to the interface weld in the pipeline immediately outside the black cell. Sections of piping that are part of components and penetrate the black cell wall or ceiling shall meet the same requirements as the black cell piping to which it attaches up to the interface weld in the component piping immediately outside the black cell. (See Figure A-1.)

Black Cell Piping that is considered to be Black Cell Process Piping includes:

- Piping containing liquid waste to be processed during normal operations
- Piping containing liquid waste from vessel transfers and drains
- Piping containing process and ITS air required to maintain the operation of the PJMs
- Piping for the PJM vent headers
- Piping and tubing for air spargers
- Piping for vessel heating or transfer steam ejectors
- Piping for steam to evaporators
- Piping for off-gas vent lines
- Piping for vent lines from breakpots

Black Cell Piping that is considered to be Black Cell Non-Process Piping include:

- Piping for sump steam ejectors
- Piping for process air passing through a black cell that does not supply process air to any component in a black cell, but instead is routed through for other purposes.
- Piping for vessel emptying steam ejectors
- Piping for overflow lines without a safety function
- Piping for cooling water
- Piping for drain lines
- Piping for radar guide tubes without a safety function
- Piping for bubbler tube level detectors without a safety function
- Piping for flushing without a safety function.

[12] UT or RT shall be performed by the pipe manufacturer on longitudinal seam welds for black cell process piping, and for process piping to be enclosed by an outer jacket. Eddy current testing is permitted, also, with restrictions as identified in the piping design specifications.

Figure A-1 - Examples of Black Cell and Component Piping

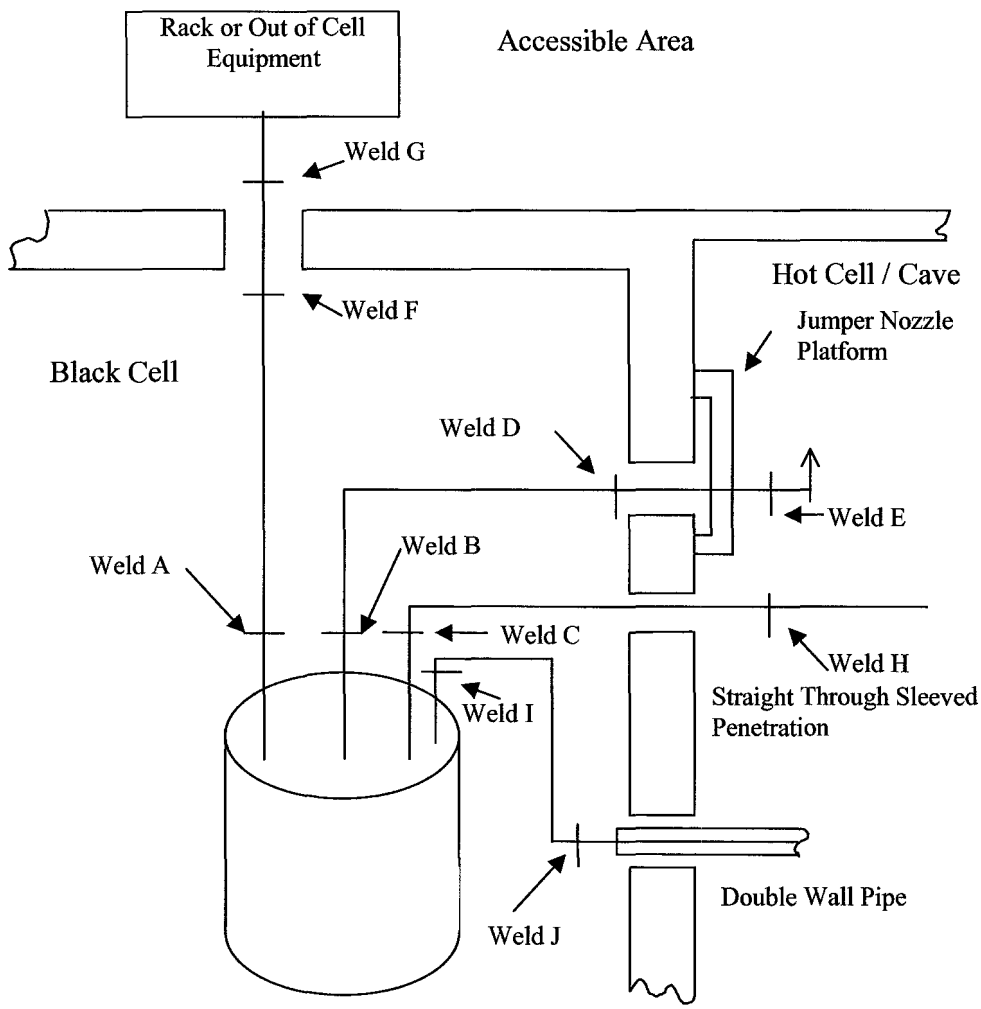

Black cell piping extends between termination welds. Examples include the piping and welds extending from Weld A to Weld F, from Weld B to Weld D, from Weld C to Weld H, and Weld I to Weld J.

The piping procured as part of equipment and penetrating the black cell walls shall meet the same design, fabrication, construction, testing, and inspection requirements as the black cell piping to which it attaches out to the first weld outside of the black cell. An example is the component piping between Weld F and Weld G.

The piping procured as part of a jumper platform and penetrating the black cell wall shall meet the same design, fabrication, construction, testing, and inspection requirements as the black cell piping to which it attaches out to the first weld outside of the black cell. An example of this is the piping between Weld D and Weld E.

Attachment 51 – Appendix 7.15

WTP Common
Operating Documents

The following drawings have been incorporated into Appendix 7.15 and can be viewed at the Ecology Richland Office. **New drawings are in bold lettering.**

Drawing/Document Number	**Description**
24590-WTP-PER-HV-02-001, Rev 1	Fugitive Emissions Control Description
24590-WTP-PER-M-02-005, Rev 1	Description for Access for Conducting Integrity Assessments
RESERVED	RESERVED

DOCUMENT INFORMATION

Please complete the following information when submitting a document to PDC.

Correspondence (CCN) No:	**Rev: N/A**
Document No: 24590-WTP-PER-HV-02-001	**Rev:** 1

Project Information (Check Applicable Box)

- ☐ Balance of Facilities
- ☐ Pretreatment
- ☐ HLW Vitrification
- ☐ LAW Vitrification
- ☐ Analytical
- ☐ External Interfaces
- ☒ Across all areas

Document is applicable to ALARA? ☐ Yes ☒ No

In general, any record that deals with Radiation, Radioactive Material, Occupational Dose, Dose Reduction, or Dose Rate are considered ALARA Records. (See 24590-WTP-GPP-SRAD-002, *Application of ALARA in the Design Process*, section 4.8 for additional guidance)

Additional Information for Correspondence

Subject Code(s) _____

Action Item Information. (This section does not apply to Meeting Minutes.)

☐ No Action Item within the correspondence

☐ Action(s): (Give a brief description of actions in the following space [optional])

_____

Due Date: _____ (If no due date is indicated, a 2-week period will be assigned.)

Action Owed to: _____

Actionee(s)			

This correspondence closes action on Correspondence Number _____

Determination of External Distribution and Availability

Does the document contain scientific or technical information of potential interest outside the project? ☐ Yes ☒ No

If it does, PDC will send the document to OSTI; if not, it will not be sent to OSTI. (Required by contract)

- ☐ Subcontract Files _____ Copies
- ☐ PAAA Coordinator MSII-B
- ☐ Contains SENSITIVE Information

10-10-07

Processed Data Entry ☐ Copied QA ☐ Scanned ☐ Filed

Document title: **Fugitive Emissions Control Description**

Contract number: DE-AC27-01RV14136

Department: HVAC/Fire Protection

Author(s): Leo H. Solis

Principal author signature: Leo H Solis

Document number: 24590-WTP-PER-HV-02-001, Rev 1

Checked by: A.V.Saguisag

Checker signature: A Saguisag Jr

Date of issue: 08 October 2002

ISSUED BY RPP-WTP PDC 10-10-02 UNIT DATE

Issue status: Approved for Permitting Use

Approved by: Jan Sanders

Approver's position: Manager, HVAC/ Fire Protection

Approver signature: Sanders

ANTONIO V. SAGUISAG, JR. STATE OF WASHINGTON 31604 REGISTERED PROFESSIONAL ENGINEER

EXPIRES: 10/22/03

This bound document contains a total of 8 sheets

A Saguisag Jr 10/08/02

Signature Date

River Protection Project
Waste Treatment Plant
3000 George Washington Way
Richland, WA 99352
United States of America
Tel: 509 371 3500
Fax: 509 371 3504

History Sheet

Rev	Date	Reason for revision	Revised by
0	08/20/02	Initial Use	Leo H.Solis
1	10/08/02	Re-Issued for Permitting Use	A.V.Saguisag

Contents

1 Introduction 2

2 Applicable Documents 2

2.1 40 CFR 264.1101, (c)(1)(iv), Standards for Owners and Operators of Hazardous Waste Treatment, Storage and Disposal facilities, Design and Operating Standards 2

2.2 WAC 173-303-695, Containment Buildings 2

3 Description 2

3.1 WTP Confinement Zones 2

3.2 Fugitive Dust Control Description 4

Figures

Figure 1 WTP Confinement Systems 5

Acronyms

CFR	Code of Federal Regulations
DWPA	Dangerous Waste Permit Application
HEPA	High Efficiency Particulate Air Filter
HLW	High Level Waste Vitrification Plant
HVAC	Heating, Ventilation and Air Conditioning
LAW	Low Activity Waste Vitrification Plant
ORP	Office of River Protection
PTF	Pretreatment Facility
RCW	Revised Code of Washington
WTP	River Protection Project-Waste Treatment Plant
SSCs	Systems, Structures, and Components
WAC	Washington Administrative Code

1 Introduction

In compliance with the Washington Administrative Code, WAC 173-303-695, WTP facilities have been designed to prevent fugitive emissions of contaminants from containment buildings within PTF, HLW and LAW through pathways other than HEPA-filtered and monitored discharge points to the environment. WTP HVAC systems, in conjunction with the building structures provide the confinement system needed to prevent exit of contaminants from WTP facilities through doors, windows, building cracks or other unmonitored and unfiltered exit paths directly to the environment.

This narrative describes the mitigative features of the WTP facilities which prevent fugitive emissions of contaminants from the various containment buildings directly to the environment and ensures that no visible emissions are emitted from containment buildings.

2 Applicable Documents

The description supports the DWPA submittal in compliance with the following Federal and State of Washington Administrative Codes.

2.1 40 CFR 264.1101, (c)(1)(iv), Standards for Owners and Operators of Hazardous Waste Treatment, Storage and Disposal facilities, Design and Operating Standards

2.2 WAC 173-303-695, Containment Buildings

3 Description

3.1 WTP Confinement Zones

The WTP facilities are designed such that they are segregated into confinement zones for ventilation control purposes. WTP confinement zones consist of barriers or barrier systems, which includes walls, floors and roofs, and the associated HVAC systems.

WTP facilities' ventilation confinement zones shown in Figure 1 consist of the following:

Confinement Zone	Contamination Classification	Ventilation Design Philosophy Definitions
Primary	C5	Plant areas and associated ventilation ductwork that are in direct contact with airborne contaminants and which prevent the spread of airborne contaminants to adjacent zones under both normal and abnormal operating conditions. Maintained at approximately (-) 1.0 to (-) 1.4 inches of water relative to C3 areas.
Secondary	C3	Contaminated areas where work requires protective clothing. Maintained at maximum negative pressure of (-) 0.4-inches of water relative

Confinement Zone	Contamination Classification	Ventilation Design Philosophy Definitions
		to surrounding C2 areas.
Tertiary	C2	Controlled Area. Operating areas of the process building that have direct interfaces with contaminated areas and have the potential to be contaminated. Maintained at a slight negative pressure with respect to atmosphere.

Confinement will be achieved by maintaining the greatest negative pressure in areas with greatest contamination potential. Air will be cascaded from areas with the least potential for contamination to areas with the greatest potential for contaminated areas (i.e., C2 to C3 to C5).

Airborne contaminants in C2 areas will cascade to C3 areas or be removed by C2 exhaust system HEPA filters prior to discharge to the environment. Airborne contaminants in C3 areas will cascade to C5 areas or be removed by C3 exhaust system HEPA filters prior to discharge to the environment, including releases from containment buildings within C3 areas. Airborne contaminant in C5 areas will be removed by C5 exhaust system HEPA filters prior to discharge to the environment, including releases from containment buildings within C5 areas.

To minimize fugitive emissions, contaminants are confined in the building by maintaining pressure differentials and proper air flow directions from areas of lesser contamination potential to areas of greater contamination potential. The facilities are kept at a negative pressure relative to outdoors by exhausting more air than supplied to the WTP Process Facilities resulting in net inleakage to the building from outdoor environment to inside C2 areas.

WTP cascade system will pass air through more than one area thus reducing the number of separate ventilation streams, the amount of exhaust air requiring treatment, and the number of monitored discharge points to atmosphere.

Except for certain C2 areas, exhaust from WTP process buildings is HEPA filtered prior to discharge to atmosphere precluding fugitive dust releases through the normal exhaust paths.

During routine operating and maintenance activities, cascade ventilation is maintained. When starting up, WTP HVAC systems are started in the following sequence to maintain proper cascaded air flow.

1. C5 exhaust fans
2. C3 exhaust fans
3. C2 exhaust fans
4. C2 supply units

The systems are interlocked such that the exhaust systems serving areas of lesser contamination potential can not operate without the exhaust systems serving areas of higher contamination potential operating. This precludes pressurization of WTP areas and possible fugitive dust emissions from the facility through doors, windows, building cracks, or other unmonitored and unfiltered exit paths.

3.2 Fugitive Dust Control Description

The following design features and operational measures will be used to prevent fugitive dust from escaping from containment buildings resulting in unfiltered and unmonitored releases to the environment, and control fugitive emissions such that openings will not exhibit visible emissions:

3.2.1 Cascading air flow from areas of least potential contamination to areas of greatest potential contamination (i.e., C2 to C3 to C5 areas).

3.2.2 Greater negative pressure in confinement areas compared to outside environment pulls air into the area preventing backflow.

3.2.3 Intake from one confinement zone to another through air in-bleed units, with isolation and backflow control type features.

3.2.4 HEPA filtration of exhaust air is monitored prior to atmosphere discharge through an exhaust stack. C2 and C3 exhaust systems have one stage of HEPA filters. C5 exhaust systems have two stages of HEPA filters.

3.2.5 Redundant exhaust fans maintain negative pressure and cascading airflow during normal operation, routine fan maintenance and repair conditions.

3.2.6 Personnel ingress and egress through airlocks and subchange rooms.

3.2.7 Dedicated HEPA-filter systems will be provided for each maintenance area, workshop, and decontamination room where local process-generated airborne contaminants will be collected to prevent spread outside of the area.

3.2.8 Containment buildings (i.e., cells or areas) are typically located within C3 or C5 areas for control of airborne contamination.

3.2.9 Containment buildings are located within ventilation-controlled process facilities.

Figure 1 WTP Confinement Systems

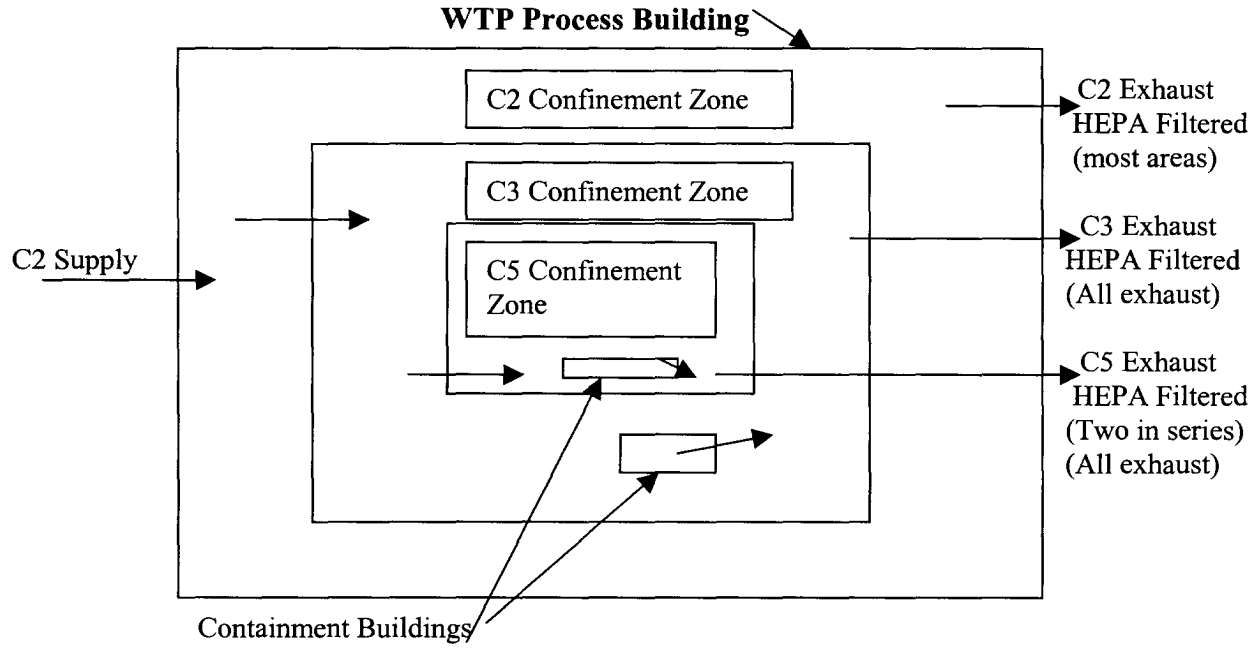

Notes:

1. Confinement zone barriers (i.e., walls, floors, and roofs) are made of material meeting requirements of Statutes and Codes applicable to confinement structures.
2. Containment buildings are located in C3 and C5 confinement zones.
3. Supply to facilities are distributed to C2 areas, then cascaded to C3 areas and eventually to C5 areas. The facilities are kept at a negative pressure relative to outdoors by exhausting more air than supplied to the confinement building resulting in net inleakage to the building.
4. Exhaust air from the facilities are HEPA filtered prior to release to atmosphere at an elevated release point. C5 exhaust passes through two HEPA filtration system in series.
5. During normal operation and routine maintenance conditions, this cascade type ventilation is maintained.

MASTER DISTRIBUTION SCHEDULE

Project Name: WTP/RPP

Document Distribution: Fugitive Emissions Control Description

Document Number: 24590-WTP-PER-HV-02-001

Revision: 1

Insert rows as necessary ↑

Name	MSIN	Controlled	Uncontrolled	Size				Comments
				8 ½ x 11	11 x 17	Full	As Is	
Fred Beranek	MS6-N1						X	
Mike O'Connor	MS4-B2						X	
Jeff Markillie	MS6-M1						X	
Phil Peistrup	MS6-N1						X	

Insert rows as necessary ↑

Jan Sanders
Approver's Name (Print)

Approver's Signature

10-9-02
Date

R10108054

DOCUMENT INFORMATION

Sheet 1 of 1

The following information is required when submitting a document to PDC for issuance.	**Correspondence (CCN) No:** _____ **Document No:** 24590-WTP-PER-M-02-005 **Rev:** 1

Project Information (Check Applicable Box)

☐ Balance of Facilities ☐ HLW Vitrification ☐ Analytical Laboratory ☒ Across all areas

☐ Pretreatment ☐ LAW Vitrification ☐ External Interfaces

Document is applicable to ALARA (as determined by the originator)? ☐ Yes ☒ No

Applicability to ALARA means that the item has the potential to affect doses, contamination levels, or releases to the environment. (See 24590-WTP-GPP-SRAD-002, *Application of ALARA in the Design Process*, sections 4.1 and 4.2 for more information.)

Subject code(s): _____ (for correspondence only)

ACTION ITEM INFORMATION (for correspondence other than meeting minutes)

Commitments: ☐ Yes ☒ No (if yes, brief description below)

_____

_____

Tracked by RITS

Commitment Owed to: _____ Due Date: _____

Actionee(s)			

Tracked by PADC

Written Response Required: ☐ Yes ☐ No

Owed to: _____ Due Date: _____

This correspondence closes action on Correspondence Number _____

☐ Subcontract Files _____ Copies

☐ PAAA Coordinator MS14-4B

☐ Contains SENSITIVE Information

Additional Departmental Info (to facilitate keyword search)

Internal ☐ DNFSB ☐ ORP ☐ OSR ☐ WDOE ☐ WDOH ☐ Other _____

Special Instructions for PDC

8/5/03

Processed Data Entry ☐ Copied QA ☐ Scanned ☐ Filed

Document title: **Description of Access for Conducting Integrity Assessments**

Contract number: DE-AC27-01RV14136

Department: Mechanical Systems

Author(s): Sharok Khabir

ISSUED BY
RPP-WTP PDC
INIT DATE 8/5/03

Principal author signature:

Document number: 24590-WTP-PER-M-02-005, Rev 1

Checked by: Steve Vail

Checker signature:

Date of issue: August 5, 2003

Issue status: Issued for Permitting Use

Approved by: MW Hoffmann

Approver's position: Manager, Mechanical Systems

Approver signature:

MARK W. HOFFMANN
STATE OF WASHINGTON
0030952
REGISTERED
PROFESSIONAL ENGINEER
8/5/03
EXPIRES 12/10/04

This bound document contains a total of 8 sheets

River Protection Project
Waste Treatment Plant
2435 Stevens Center Place
Richland, WA 99352
United States of America
Tel: 509 371 2000

Notice

Please note that source, special nuclear and byproduct materials, as defined in the Atomic Energy Act of 1954 (AEA), are regulated at the U.S. Department of Energy (DOE) facilities exclusively by DOE acting pursuant to its AEA authority. DOE asserts that pursuant to the AEA, it has sole and exclusive responsibility and authority to regulate source, special nuclear, and byproduct materials at DOE owned nuclear facilities. Information contained herein on radionuclides is provided for process description purposes only.

History Sheet

Rev	Date	Reason for revision	Revised by
0	10/01/02	Issued for Permitting Use	SW Vail
1	8/05/03	Revision includes addition of the AEA statement and the inclusion of the Analytical Laboratory. Reissued for Permitting Use	Sharok Khabir

Contents

Notice ii
History Sheet iii
1 Introduction 1
2 Applicable Documents 1
2.1 24590-PTF-PER-M-02-003, *Underground Pipe Protection* 1
3 Description 1
3.1 Access Provisions 1
3.2 Assessment Approach 3
3.3 Characterization 4
3.4 Process Monitoring 4
3.5 Leakage Assessment 4

1 Introduction

The Dangerous Waste Permit Condition III.10.E.9.b.ix requires, prior to construction of each secondary containment and leak detection system for the WTP Tank Systems, "a detailed description of how tank system design provides access for conducting future tank integrity assessments".

The purpose of this document is to define the access provided for future tank integrity assessments.

2 Applicable Documents

2.1 24590-PTF-PER-M-02-003, *Underground Pipe Protection*

3 Description

3.1 Access Provisions

3.1.1 Black Cells

Tank systems located in black cells are not physically accessible. These tank systems have been designed for a 40 year life so access is not required. In order to ensure tank systems last for 40 years, corrosion resistant materials based on expected chemistries have been specified; sufficient corrosion allowances have been specified; and robust design codes (such as ASME *Boiler and Pressure Vessel Code,* Section VIII, Division 1, ASME B31.3, *Process Piping*) have been used.

Where there is a potential for erosion due to entrained solids exceeding 2 weight percent and velocities in excess of 10 feet per second, additional allowance or hardfacing is provided. Positive material identification is performed by vendors for spool pieces and vessels and by field inspectors for welds susceptible to corrosion. Welds of the confinement boundary of the vessels are radiographed and field pipe welds are radiographed or ultrasonically inspected. Vessels and piping are analyzed for fatigue, and vessel piping is designed to be flushed to remove deposits.

Each of the black cells have stainless steel liners with sumps and level detection capable of detecting liquids collecting in the sump within 24 hours. Access ports are provided to allow camera inspection of the sumps.

3.1.2 Hot Cells

Tank systems in hot cells are remotely accessible for limited inspection. Many of the design considerations for tank systems in black cells apply to tank systems in hot cells. Most components in these tank systems have been designed so access is not required and have been designed for a 40 year life. Where components (i.e. melters, ultrafilters, silver mordenite cartridges, etc.) have been designed for a shorter life, the capability to replace the component has been provided. In order to ensure that vessels and piping last for 40 years, corrosion resistant materials based on expected chemistries have been specified; sufficient corrosion allowances have been specified; and robust design codes (such as ASME *Boiler and Pressure Vessel Code,* Section VIII, Division 1, ASME B31.3, *Process Piping,* and ASME AG-1, *Code*

on Nuclear Air and Gas Treatment) have been used. Where there is a potential for erosion due to entrained solids exceeding 2 weight percent and velocities in excess of 10 feet per second, additional allowance or hardfacing is provided. Positive material identification is performed by vendors for spool pieces and vessels. The vessels and piping are analyzed for fatigue and designed to be flushed to remove deposits.

Jumpers may be installed in selected tank systems, which would allow for measurement of piping wall thickness and inspection for corrosion or erosion of piping systems. A selected portion of the tank system components in hot cells will be remotely accessible for repair or replacement.

The pretreatment facility (PTF) and high level waste (HLW) vitrification facility and the analytical laboratory (Lab) contain highly radioactive wastes and hazardous materials that come into contact with various systems, structures, and equipment. As a result of this contact, these systems, structures, and equipment require special design considerations for access, handling, and maintenance. In general, process systems and equipment within cells or caves that could fail during operations will be designed for safe recovery, replacement, and/or redundancy.

In the pretreatment facility, remotely replaceable equipment (pumps, ultrafilters, ion exchange columns, reboilers, etc.) will be placed in a centrally located hot cell and serviced by a dedicated facility crane. Small equipment (pumps, valves and instruments), in less radioactive systems, will be located in bulges outside hot cells and serviced manually using temporary confinement and shielding and using portable cranes as appropriate.

In the HLW vitrification facility, in-cave, hot cell equipment will generally be remotely maintainable and replaceable. In-cave equipment disassembly, maintenance, and replacement will be accomplished via local remote handling equipment or by remote handling equipment in dedicated maintenance areas or caves.

In the PTF and HLW vitrification facility hot cells where there is potential for equipment failure within a high radiation area, means will be provided for recovery of that equipment. Recovery will be accomplished by either using dedicated remote recovery facilities, by placing pumps and other ancillary equipment in bulges or other accessible area or, where permissible, operator intervention. Operator intervention will not be an acceptable means for routine maintenance, but the capability will be designed into the facility for off-normal recovery operations. Operator intervention means of recovery will normally be accomplished via strategically located plugs in cave or cell walls and roofs with special lifting and handling equipment, specially designed systems and equipment connections and a means of isolation in the cell or cave. Sufficient space will be provided for removal and replacement of these plugs and the associated recovery operation.

In hot cells, a process and mechanical handling monitoring closed circuit television (CCTV) system is provided for remote viewing of equipment and operations within cave areas and where the radiation levels are too high for personnel access. Cameras will be located to give optimum viewing angles and distance to suit the process where required. Cameras used to monitor process functions can be used to evaluate tank systems, but the capability may be limited by their location.

3.1.3 Accessible Areas

Tank systems in accessible areas can be visually and physically inspected. The same design considerations exist for accessible tank systems that apply for hot cell tank systems. Tank system components in accessible areas will be accessible for repair or replacement.

Where maintenance, repair or replacement activities are deemed necessary, the design will provide good access to the component, operator visibility, appropriate lifting and handling devices, and adequate provisions for transfer of equipment.

Positioning of equipment will be optimized to avoid unnecessary dismantling to gain access.

3.1.4 Underground Piping

Waste is received from the Hanford tanks through one of three co-axial (pipe-in-pipe) transfer pipes. Treated waste is transferred between the PTF and the Lab, LAW, and HLW facilities through coaxial pipelines. This underground piping is not accessible for assessment without excavation; however co-axial pipelines have the provision to pneumatically test both primary and secondary pipes for leakage by pressurizing the annular space between the pipes. They also have on-line primary containment leak detection capability. Protection of underground piping is addressed in 24590-PTF-PER-M-02-003, *Underground Pipe Protection.*

3.1.5 External Tanks

External tanks are accessible for inspection and integrity assessment.

3.2 Assessment Approach

An initial integrity assessment is not required because these are new tank systems and miscellaneous units. The tank systems will be designed, installed, and assessed in accordance with WAC 173-303-640(3). Baseline measurements will be taken in predetermined locations to allow comparison with future measurements.

3.2.1 Periodic Assessments

Periodic integrity assessments for tank systems in black cells, hot cells, and accessible cells will be performed. The periodic integrity assessments of tank systems will include, as a minimum, the review of applicable process chemistry and operating conditions over the period to ensure that they have stayed within the specified ranges and the determination of the effect on corrosion or erosion of any deviations from the specified ranges.

In hot cells and accessible areas, where consistent with keeping the radiation exposure as low as reasonably achievable (ALARA), the periodic integrity assessments of tank systems may include non-destructive examination (NDE) of welds or determination of wall thickness in order to detect potential degradation in selected accessible systems. Identifying and evaluating potential degradation mechanisms will help identify areas where additional inspection may be required. Adjustments to inspection strategy will also account for consequences of a failure. Other factors include material of construction, design conditions, operating conditions, design codes and standards used, effectiveness of corrosion monitoring programs, and maintenance program elements.

3.2.2 Vessels with High Erosion Potential

Vessels with high erosion potential are identified based on the solids contents, the expected velocity, and the viscosity of the fluid. Where erosion has the potential to be high, additional wear allowance is provided or the surfaces are hardfaced or an erosion resistant material is used. Some of the vessels in the hot cells can be accessed to see if there is evidence of erosion.

3.3 Characterization

Sampling and analysis will be performed as required to support process control, environmental compliance, regulatory compliance, and waste form qualification. Sample points and sample requirements will be specified.

3.4 Process Monitoring

Dangerous waste tank systems have spill prevention controls and overfill prevention controls. As required for process purposes, tanks or vessels are provided with level, temperature, and pressure indicators to monitor the physical parameters.

3.5 Leakage Assessment

A check of the mass transferred during operation by comparing the tank or vessel level changes will determine if there are any gross leakage or misrouting of fluids. The sump levels in these areas will be monitored, and if leakage is detected, assessment will be made (by isolating tanks or vessels and watching for level changes or by emptying vessels to see if the source of the leak stops) to determine the source of the leakage. This may involve draining the contents from a vessel to see if the leak can be stopped or may involve isolating and filling a vessel to determine if there is an appreciable loss of inventory. Leak tests to determine the loss of inventory will be made periodically.

MASTER DISTRIBUTION SCHEDULE

Document Number	Rev
24590-WTP-PER-M-02-005	1

Insert rows as necessary using tab key ↑

Name	MSIN	Controlled	Uncontrolled	Size						Comments
				8 ½ x 11 (A)	11 x 17 (B)	Drawings			As Is	
						C	D	E		
Vail, Steve	MS4-B2		X						X	
Hoffmann, Mark	MS4-B2		X						X	
Cornelison, Chad	MS4-C1		X						X	
Markillie, Jeff	MS6-M1		X						X	
Robertson, Daniel	MS7-BSW		X						X	
Chiaramonte, Jerry	MS9-A		X						X	
Erlandson, Brad	MS4-C1		X						X	

Approver Mark Hoffmann *Print Name* — *Signature* — 8/5/03 *Date*