REFERENCE COPY
NOT FOR CIRCULATION
OCT 0 8 1990
RECEIVED FROM WELL
DOCUMENT CONTROL

0009062 RHO-ST-33
-201

The System For Retrieval Of Solidified Hanford High-Level Defense Wastes

A Design Description

JUN 1990
RECEIVED
EDMC

J. K. Strickler
H. A. Wallskog
J. R. Wetch

REFERENCE COPY

Prepared for the United States
Department of Energy
Under Contract DE-AC06-77RL01030

Rockwell International

Rockwell Hanford Operations
Energy Systems Group
Richland, WA 99352

Rockwell International
Rockwell Hanford Operations
Energy Systems Group
Richland, WA 99352

DISCLAIMER

This report was prepared as an account of work sponsored by an agency of the United States Government. Neither the United States Government nor any agency thereof, nor any of their employees, makes any warranty, express or implied, or assumes any legal liability or responsibility for the accuracy, completeness, or usefulness of any information, apparatus, product, or process disclosed, or represents that its use would not infringe privately owned rights. Reference herein to any specific commercial product, process, or service by trade name, trademark, manufacturer, or otherwise, does not necessarily constitute or imply its endorsement, recommendation, or favoring by the United States Government or any agency thereof. The views and opinions of authors expressed herein do not necessarily state or reflect those of the United States Government or any agency thereof.

AVAILABLE FROM THE
NATIONAL TECHNICAL INFORMATION SERVICE
SPRINGFIELD, VA. 22161

PRICE: MICROFICHE: $3.00
PAPER COPY: $8.00

ABSTRACT

The major objective of the Hanford defense waste retrieval activity is to design, develop, demonstrate, and qualify the equipment, staff, and methods required for the safe retrieval of solidified high-level radioactive wastes from the 133 large (75-foot-diameter) single-shell, underground storage tanks at Hanford. The program is currently limited to research, development, and demonstration of systems and technology in support of selecting an alternative for disposal of Hanford high-level defense waste. The operational phase will not be initiated until final retrieval decisions have been made. This report relates the requirements and sets forth much of the data and criteria currently known. It describes the preliminary design of a remotely operated, self-contained, mobile system which incorporates a mechanical, articulated mining boom. This boom, when equipped with a variety of suitable tools, can remotely cut up in-tank equipment, remove the debris, recover the solid wastes, clean the tank walls, and deposit the waste into a bucket elevator. The bucket elevator automatically removes the waste from the tank and deposits it into shielded shipping containers. The containers are remotely sealed, washed, and deposited into sealing containers. The containers are remotely sealed, washed, and deposited into sealing containers. These containers are sealed and placed on a transfer vehicle for transport to a waste processing facility or a suitable repository. All of the retrieval equipment is installed on a mobile platform which bridges the tank domes to avoid loading the dome structure. Mobility provides for progressing from tank to tank until all of the 75-foot-diameter, single-shell tanks have been emptied. Ancillary equipment includes in-tank viewing and lighting systems, positive filtered ventilation equipment for contamination control, equipment for washing tools and mining equipment, and includes provisions for remote maintenance of contaminated equipment, and quick removal and replacement of parts. The details of the preliminary design set forth in Chapter 2 of this report were prepared by Nuclear Systems Associates of Brea, California, under subcontract to Rockwell Hanford Operations.

CONTENTS

	Page
Abstract	iii
1.0 Introduction	1-1
1.1 Background and Relation to the National High-Level Nuclear Waste Management Program	1-1
1.2 Waste and Tank Characteristics	1-12
1.3 Summary of Design Criteria	1-26
1.4 Summary of Selection Concept and Purpose of Design Study	1-28
2.0 Prototype Retrieval System Design Description	2-1
2.1 System Description Summary	2-1
2.2 Mining Subsystem and Controls	2-13
2.3 Waste Material Removal Subsystem	2-55
2.4 Container Handling Subsystem	2-65
2.5 Retriever Platform Structure	2-79
2.6 Retriever Ancillary Equipment	2-82
2.7 Mobile Control Trailer	2-93
2.8 Mobile and Support Systems	2-101
3.0 Potential Applications of Hanford Retrieval Technology	3-1
4.0 Development Plan and Schedule	4-1
5.0 References	5-1
Appendix	A-1

1.0 INTRODUCTION

1.1 BACKGROUND AND RELATION TO THE NATIONAL HIGH-LEVEL NUCLEAR WASTE MANAGEMENT PROGRAM

The U.S. Department of Energy (DOE) has custody of, and responsibility for, the management of radioactive wastes resulting from the nation's nuclear defense program. By direction of the President and the Congress, the DOE is conducting a comprehensive program to isolate all U.S. nuclear wastes from the biosphere.(1) These high-level wastes contain more than 99% of the residual radionuclides produced in fuels and targets during reactor operations. They include essentially all of the fission products, activated fuel element materials and the actinides not recovered for use.(2)

High-level defense wastes (HLW) have been stored at the Hanford Site (Figure 1-1), in Washington State since 1944, the Savannah River Laboratories (SRL) in South Carolina since 1954, and the Idaho National Engineering Laboratories (INEL) since 1958. At Hanford, high-level radioactive wastes from chemical processing of spent fuels were originally stored as liquids with precipitated sludge in single-shell underground tanks. High-heat release rates of wastes from later processing schemes lead to the installation of numerous air circulators (Figure 1-2) which helped to cool and reduce the violent bumping caused by localized boiling. Due to leaks in 24 of the 133 large single-shell tanks at Hanford, a program was initiated in 1968 to evaporate the water from the liquid wastes. To prevent overheating the tanks, it was necessary to remove the high-heat-generating isotopes ^{137}Cs and ^{90}Sr. These isotopes were immobilized as the compounds cesium chloride (CsCl) and strontium fluoride (SrF_2) and encapsulated in 2-inch-diameter by 20-inch-long, double-jacketed capsules for storage in water basins.

The remaining liquid wastes at Hanford have since been evaporated to produce 25 million gallons of salt cake, 1.6 million gallons of interstitial liquor and approximately 12 million gallons of sludge in

the single-shell tanks. Approximately 13 million gallons of Hanford residual slurry will remain in double-shell tanks after 1990-1995. Organic solvents, unique to the Hanford processes, have formed organic complexants that inhibit further evaporation in the vacuum evaporator-crystallizers. These complexants also inhibit natural soil and process ion exchange removal of plutonium, strontium, and multivalent actinides and rare earths. The complexants and high sodium content of many Hanford HLW wastes also interfere with immobilization processes such as concrete, glass, and ceramic forms. Consequently, Hanford has the unique problem of removing these organic complexants and some sodium before it can immobilize a major fraction of its HLW.

The early single-shell concrete tank steel liners were 0.25- to 0.38-inch thick when installed. Corrosion data and the knowledge that 58 tanks are of questionable integrity, including 24 known to have leaked, (see Appendix) lead to the reasonable conclusion that the tank walls will be greatly deteriorated when retrieval is planned for initiation in 1996. Figure 1-3 is an early 1970s photograph of the steel liner of one of the tanks. Judging from the rate of some of the early leaks into surrounding soil, it is reasonable to assume that cracks or joints exist in some of the concrete surrounding the tanks that can leak liquid.

The ongoing interim HLW management program is directed toward de-activation of all single-shell tanks in 1981, and removal of all drainable and pumpable liquids in 1984. Consistent with the above, in order to avoid adding liquid (i.e., sluice), the capability will be developed to mine the tanks mechanically with the waste as is. The existence of internal equipment (see Figure 1-2) embedded in the salt cake and the sludge, Figures 1-4 and 1-5, will require a remote cutting and mining capability that must be reliable, fail-safe, and reasonable in cost to build and operate. Hanford waste volumes represent about 65% of the national HLW inventory. Consequently, Hanford has a unique and large task if retrieval is required.

Figure 1-6 describes one possible HLW retrieval, processing and disposal implementation plan that could be used at Hanford. After retrieval, dissolving and blending, sludge separation and complexant removal, the process could be generally similar to the lead site (SRL) process. The major difference is the large quantity of solid salt cake and sludge that must be mined from single-shell tanks, complexant removal, high sodium content, and disposal of large quantities of decontaminated high nitrate salt.

In contrast, other fuel process waste storage sites have much smaller quantities of wastes in double-shell tanks, as shown in Table 1-1, and much simpler retrieval and processing requirements. Savannah River Laboratory, West Valley, and Hanford double-shell tanks can be solution-mined, i.e., sluiced and slurry pumped, with existing technology. In the case of INEL, most of the liquid waste has already been converted to calcined powders that can be pneumatically transported to an immobilization facility to make cement, glass, or ceramic waste forms. Commercial spent fuel elements are currently stored in water basins at reactor sites around the country.

The President and the Interagency Review Group (IRG)[3] have recommended that:

> Our primary objective is to isolate existing and future radioactive waste from military and civilian activities from the biosphere and pose no significant threat to public health and safety. The responsibility for resolving military and civilian waste management problems shall not be deferred to future generations.
>
> We should be ready to select the site for the first full-scale repository by about 1985 and have it operational by the mid-1990s. For reasons of economy, the first and subsequent repositories should accept both defense and commercial wastes.

TABLE 1-1. Estimated HLW Volumes, Activities, and Heat Rates.

	Volume m^3	Radioactivity Megacuries	Total Heat kW	Thermal Density watts/m^3	Activity Conc. Ci/litre	Repository Ready m^3[a]
Defense Wastes						
1) Hanford	200,000	530	2,000	10	2.5	
Old Single-Shell Tanks						
Salt Cake (1990)	96,000	12	42	0.44	0.13	
Sludge (1990)	57,000	130	520	9.1	2.3	15,000 to 60,000
Interstitial Liquor (1990)	6,000	3	11	1.8	0.54	
Double-Shelled Tanks						
Pumpable Slurries (1990)	51,000	28	92	1.8	0.54	
Double Walled Capsules						
CsCl Powder (1990)	4.9	230	730	150,000	47,000	
SrF_2 Powder (1990)	1.8	130	560	300,000	72,000	<100
2) Savannah River						
Double-Shelled Tanks						
Pumpable Slurries (1980)	90,000	800	2,000	22	9	2,500 to 10,000
3) Idaho Nuclear Eng. Labs	10,300	57	145	14	5.5	
Liquid (1990)	5,600	10	25	5	1.8	
Pneumatically Retrievable Dry Calcined Powders (1990)	4,700	47	120	25	10	5,000 to 20,000
Commercial Wastes						
1) West Valley, New York						
Double-Shelled Tanks Pumpable Slurries (1990)	2,200	11	28	13	5	100 to 400
2) Spent Fuel Elements						
In Storage At All Sites 32,000 t (1990) UO_2	6,000	4,000	8,000	~1,300	700	<9,000

[a]Separated and processed radionuclides and sludges immobilized and packaged (author's estimates).
Small Volume = glass
Large Volume = supergrout cement

> I am committed to maintaining safe interim storage of defense wastes as long as necessary. We will also proceed with research and development at the various defense sites that will lead to the processing, packaging, and ultimate transfer to a permanent repository of the high-level and transuranic wastes from defense programs.

The U.S. Energy Research and Development Administration (ERDA), issued a report on technical alternatives for long-term management of Hanford HLW, with preliminary cost estimates and an analysis of near-term risks.[4] Included therein are descriptions of 27 alternative plans, encompassing a variety of waste forms and storage and disposal modes, for the processing and disposal of Hanford HLW. One alternative was to fill the void space over the salt cake, interstitial liquor, and sludge as is, and cover the existing tanks for in situ disposal. All other 26 alternatives require retrieval to undergo various degrees of processing, immobilization, packaging, and/or placement in federal repositories.

From the foregoing it is concluded that the development of a mechanical system capable of remotely mining the high-level wastes and debris currently held in Hanford single-shell tanks is timely to be responsive to the National High-Level Waste Program recommended by the President and the Interagency Review Group and being followed by the DOE at the lead site at Savannah River.

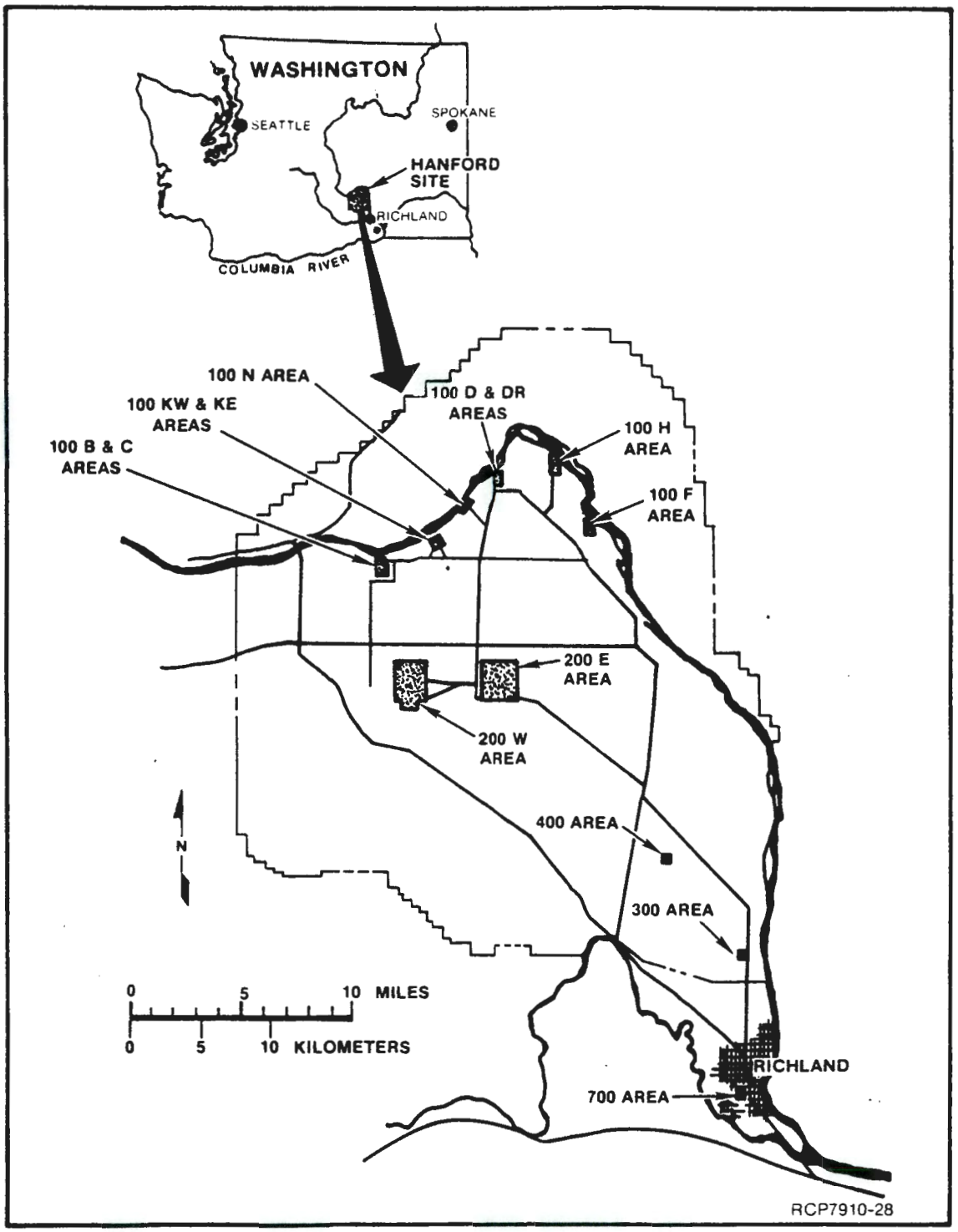

FIGURE 1-1. The Hanford Site.

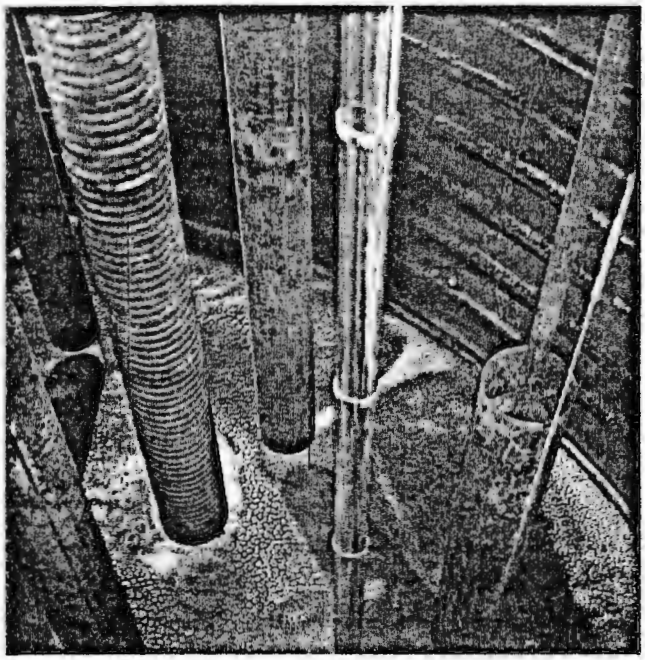

FIGURE 1-2. Airlift Circulators
(Tank Almost Empty).

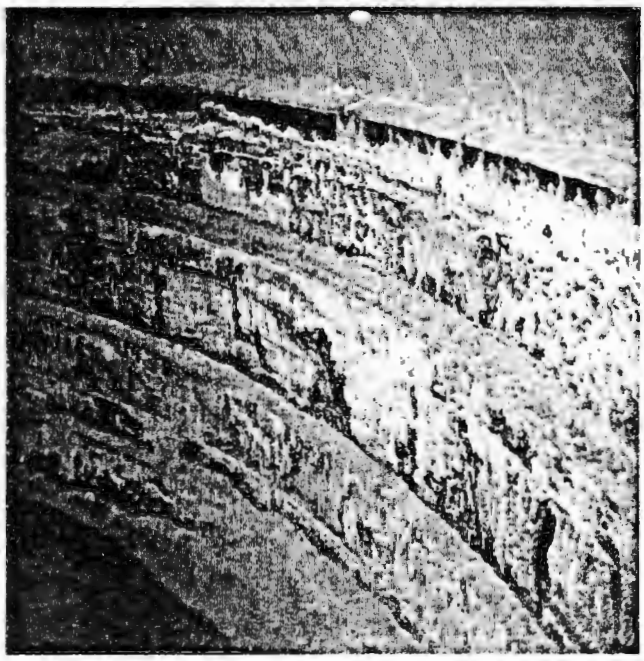

FIGURE 1-3. Single-Shell Tank Liner.

FIGURE 1-4. Equipment Requiring Remote Cutting to Remove.

FIGURE 1-5. Debris in a Tank.

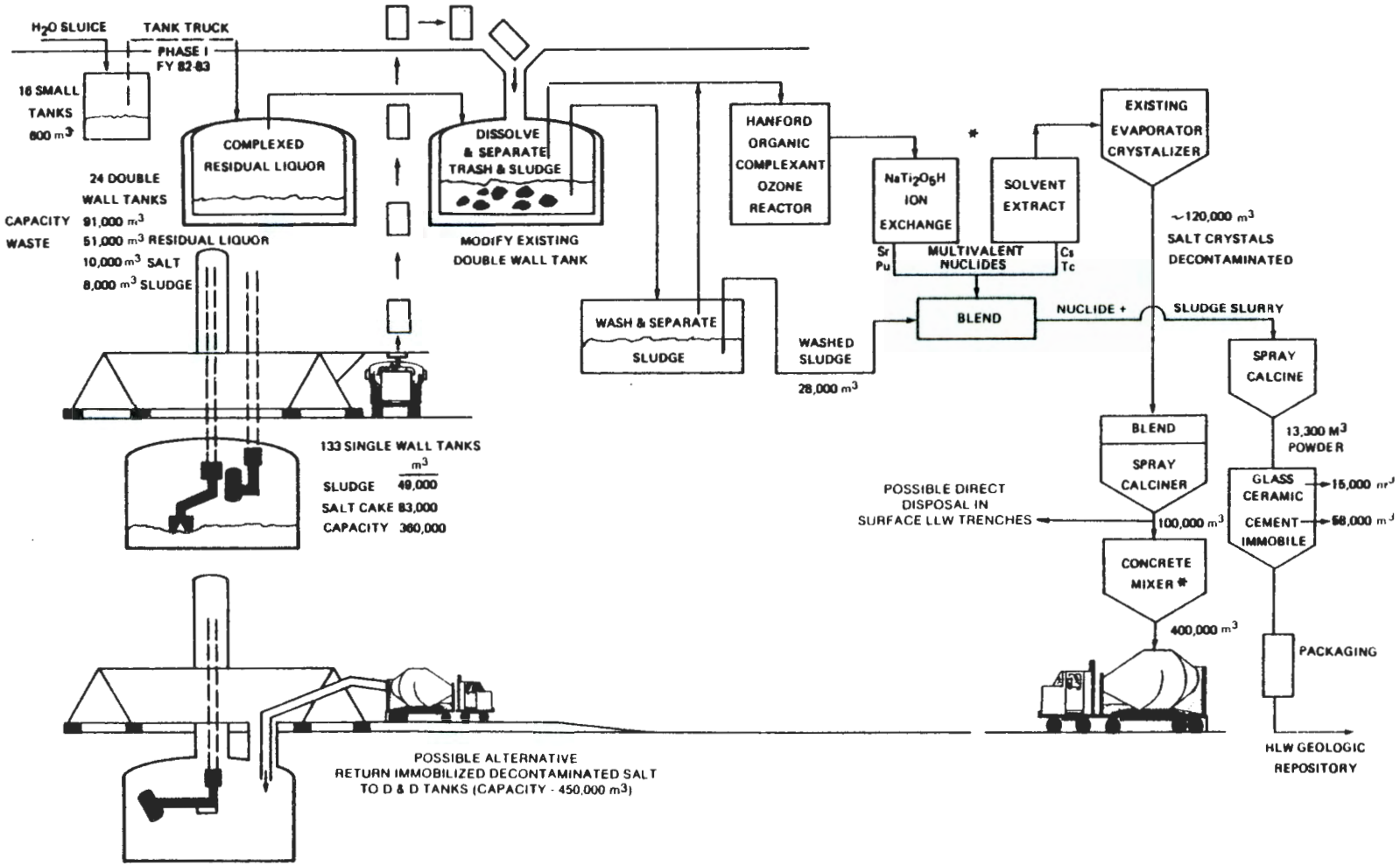

FIGURE 1-6. A Possible Scheme for Retrieval Processing and Disposal of Hanford HLW.

1.2 WASTE AND TANK CHARACTERISTICS

By 1995, the year proposed for retrieval campaign initiation, the current ongoing interim waste management program will have effected the following changes and will have produced data as follows:

- Drainable liquids will be removed from salt cake and sludges in single-shell tanks. The remaining interstitial liquor is estimated at 1,600,000 gallons.
- Removed liquids will be transferred to double-shell tanks, evaporated to reduce the volume, and stored as "residual slurry."
- The 2-inch core per 75-foot-diameter tank sampling program for single-shell tanks will provide guidance as to the composition, physical characteristics and activity variances within individual tanks and from tank to tank.
- Tank wall concrete core borings, in-tank photography, tank leakage monitoring, and laboratory accelerated corrosion testing will provide data as to the expected integrity of individual tanks.
- Survey of as-built and as-modified drawings, records, photographs, and operating histories will provide data regarding expected obstruction and debris.

1.2.1 Waste Characteristics

Table 1-2 provides a gross inventory of all Hanford in-tank waste decayed to 1995. These inventories were computed tank by tank (see appendix and reference 5) based on the operating histories of the early $BiPO_4$ Process Plant, the Redox Plant, and the Purex Plant plus a 10% addition in radionuclide inventory resulting from planned Purex operations between 1983 and 1995. Volumes are also based upon surface level measurements from the current Surveillance and Maintenance Program.

Table 1-3 provides a total Hanford in-tank major chemical inventory analysis. It should be noted that no chlorides are listed but some are known to exist in some tanks.

TABLE 1-2. Estimates of Total Hanford High-Level Defense Waste (Decayed to 1995).

Waste Type	Chemical Quantities		Radionuclide Quantities		
	Volume (m^3)	Weight (t)[a]	Weight (t)[a]	Radio-activity[b] (MCi)[a]	Heat Generation (kW)
In-Tank					
Salt cake	96,000	140,000	0.11	12	36
Sludge	57,000	87,000	940[c]	130[d]	440
Residual slurry	51,000	77,000	2.9	28	78
Encapsulated					
CsCl	4.9	7.5	2.6	230	620
SrF_2	1.8	2.8	0.54	130	480
	200,000	300,000	940	530	1,700

[a]t = 1000 kg = metric ton; MCi = megacuries = 10^6 curies.

[b]Includes parent and daughter nuclides and future Purex wastes.

[c]Data include quantities of uranium isotopes not recovered during processing (estimated quantity 920 t).

[d]Contains 0.4 MCi of actinides of which about 400 kg is plutonium.

TABLE 1-3. Major Chemicals in Hanford High-Level Defense Waste In-Tank Inventory.

Chemical	Salt Cake, wt%	Sludge wt%	Residual Liquor, wt%	Total, wt%
$NaNO_3$	84.5	16.3	15.5	46.7
H_2O	10.3	39.5	45.9	28.1
Na_3PO_4	0.1	19.9	----	5.9
NaOH	1.5	3.2	12.8	4.9
$NaNO_2$	1.7	3.3	10.8	4.5
$NaAlO_2$	1.4	2.7	10.6	4.2
Na_2CO_3	0.5	2.0	1.3	1.1
Na_2SiO_3	----	2.5	----	0.7
Al_2O_3	----	2.0	----	0.6
$Fe(OH)_3$	----	1.6	----	0.5
Na_2SO_4	----	1.0	1.0	0.6
NaF	----	1.1	0.5	0.4
$ZrO_2 \cdot 2H_2O$	----	0.8	----	0.2
KF	----	0.2	0.1	0.1
KOH	----	0.3	0.1	0.1
Total Organic Carbon	----	----	0.3	0.1
Other	----	3.6	1.1	1.3
Total	100.0	100.0	100.0	100.0

NOTE: All wt% reported to three places only. Trace amounts (less than 0.1%) of material may be present in waste form where ---- apears.

Radionuclides contained in the waste are tabulated in Reference 5. The "hottest" bulk material resides in the sludges. For example, Hanford average sludge (Table 1-4) contains 0.2 Ci/litre (200 Ci/m^3) of 0.66 MeV gammas which results in calculated dose rates of 80 R/hr, 5 ft above the sludge and 25 ft off tank center line. The hottest sludge measured, that in the AX Farm (Table 1-5), is 2.8 Ci/litre of 0.66 MeV gammas, which results in calculated gamma dose rates of 1100 R/hr to in-tank equipment at the same location. The 2.3 MeV beta from ^{90}Y daughter of ^{90}Sr has a range of 1100 mg/cm^2, or approximately 28 ft in air. The specific beta activity in hot sludge is 127 Ci/litre.

TABLE 1-4. Average Sludge Specific Activities.

Radionuclide	Activity (approx.)	
	Ci/litre	MeV
Gammas (^{137}Cs and ^{137}Ba)	0.2	0.66
Beta (^{90}Sr)	1.4	0.55
Beta (^{90}Y) daughter	1.4	2.3

TABLE 1-5. Hanford Hot Sludge.

Radionuclide	Activity (approx.)	
	Ci/litre	MeV
Gammas (^{137}Cs and ^{137}Ba)	2.8	0.66
Beta (^{90}Sr)	63.6	0.55
Beta (^{90}Y) daughter	63.6	2.3

The beta dose rates to equipment are yet to be calculated. However, an estimate based on the data above would indicate that maximum beta and secondary bremsstrahlung dose rates could be considerably higher than the gamma dose rates to equipment boots and seals operating in the tank.

One cubic centimetre of hottest sludge material could produce up to 36 R/hr beta dose at 1 ft. Consequently, thorough wash down and decontamination capability will be required of all equipment that must be maintained or removed from the retriever. Care must be taken in selecting flexible materials, lubricants, seals, etc. Plans must be made to withdraw equipment from the tanks and wash down for storage during non working hours. More detailed characterization and dose rate information will be generated before final criteria can be established.

Radiolytically formed H_2 must be removed by an adequate HEPA-filtered ventilation system before flame or abrasion wheel cutting of piping, air circulators, and debris can be undertaken.

In addition to typical hard salt cake and installed obstructions, the tanks have other unique contents. Some of these have been recorded and are listed in Table 1-6. Figure 1-7 shows a photo of a tank with diatomaceous earth addition. Past cooling of hot tanks with air circulators caused preferential encrustation around the air circulators (see Figure 1-8). Such large "lollypops" may weigh up to 10 or 20 tons. Care must be taken to avoid mining around these lollypops and unnecessarily loading the self-supporting dome. The air circulator must first be cut loose from the dome and the lollypop broken up with a pneumatic or hydraulic hammer before excavation proceeds.

1.2.2 Tank Characteristics

Figure 1-9 depicts a general layout of the Hanford 200 Area plateau. About 60% of single-shell capacity is in the 200 West Area; only three double-shell tanks are placed in 200 West Area. Tank capacities and locations are shown in Table 1-7. The appendix provides a listing of the volume inventory in each single-shell tank, a summary of salt cake and sludge inventory by tank farm, and gives the locations of the 58 tanks with questionable integrity, including 24 known leakers. See Tables A-1 and A-2 for a summary of current tank status and locations.

TABLE 1-6. Hanford Single-Shell Tank Farm Facilities Unique Contents. (Status as of 1-25-80)

Tank	Status	Contents
101-BX	QI	~1800 gallons of ARC-359 organic ion exchange resin added in 1972
102-BX	L	Diatomaceous earth added
105-BY	QI	63 tons Portland cement added
107-SX	L	41 bottles of neutralized waste from 100F Area, each with less than 1 gram ^{239}Pu
110-SX	QI	16 plastic bottles or containers (3-inch diameter by 54 inches long) containing following total volumes: 113 g U Nat 52 g U Dep 6 g Enriched U 204 g Pu
113-SX	QI	1400 cubic feet diatomaceous earth added
116-SX	QI	Diatomaceous earth added
117-TX	QI	Diatomaceous earth "mounded" in tank
106-TY	L	Diatomaceous earth added
101-U	L	Tank used for disposal of solid waste: Six cask loads of experimental fuel elements, shroud tubes and samarium "poison" ceramic balls. 1530 g of 4.5% enriched U and 6 g of Pu; plus 180 KCi ^{60}Co and 130 Ci mixed fission products Cobalt-60 slugs with 70 KCi ^{60}Co
104-U	L	Diatomaceous earth added

KEY: L = leaker; QI = questionable integrity

TABLE 1-7. Hanford High-Level Waste Storage Tanks.
(Tank Capacity in Gallons)

Area		Double-Shell[a]	Single-Shell				Total
		1,000,000	1,000,000	758,000	533,000	55,000	
200 East	Farm	AY AZ AW AN	A AX	BY	B BX C	B C	
	No. of Tanks	2 2 6 7	6 4	12	12 12 12	4 4	
	Subtotal	17	10	12	36	8	83
200 West	Farm	SY	SX	S TX TY	T U	T U	
	No. of Tanks	3	15	12 18 6	12 12	4 4	
	Subtotal	3	15	36	24	8	86
	Total	20	25	48	60	16	169

[a]Additional tanks are planned for FY-1983.

Figure 1-10 shows a general configuration of typical single-shell tanks. The inner liner covers the bottom and extends up the inner wall just above the full line and below the beginning of the dome (see Figure 1-3). The liners vary in thickness from 1/4- to 3/8-inch welded steel plate. Single-shell tanks are stiffened on the inside with formed steel angle welded to the inside of the shell (see Figures 1-2 and 1-3). The angle steel will clearly complicate wall cleaning and decontamination. All 133 of the large single-shell tanks are 75 feet in inside diameter (ID). The liners are surrounded with concrete that was poured against them. Concrete thickness is 8 to 12 inches on the bottoms and varies from 12 to 18 inches on the sides, depending upon the specific tank design. The 15-inch thick bare concrete domes are self-supporting across the 75-foot span and support 6 to 8 feet of soil cover at their centers. Some tanks are filled to within 12-1/2 feet of the dome centers.

Figure 1-11 depicts the large riser locations in single-shell tank domes. Note that the BY, TX, and S Tanks have a center 42-inch access riser. BY, TX, and S Tanks also have a 42-inch riser or manhole located on 20foot 9-inch radii. That grouping represents forty-two 758,000-gallon tanks (see Table 1-7). The A, TY, and SX Tanks have a center riser 42 inches in diameter. These twenty-one 1,000,000-gallon tanks and six 758,000-gallon tanks will correspond to the configuration of the first 42 tanks by the addition of one 42-inch riser on a 20-foot 9-inch radius. Thus, the addition of twenty-seven 42-inch risers will provide uniform access to 69 tanks. The four remaining 1,000,000-gallon AX Tanks in the 200 East Area each require a central riser 9 inches off center and a 9-inch longer mining boom, or they each require two new 42-inch risers. Boom length versus riser installation studies will determine the preferred approach during final design of operational retrievers.

The sixty 533,000-gallon B, BX, C, T, and U Tanks (36 located in 200 East and 24 located in 200 West) require a new center 42-inch riser and a new 42-inch riser on the 20-foot 9-inch radius. Thus, at least 120 new risers are required for the 500,000-gallon tanks.

The prototype retriever described herein is planned for a 42-inch center riser and a 42-inch riser placed 20 feet 9 inches off center.

A number of small 12- and 24-inch risers exist on most tanks. It is planned to use three of these smaller risers on each tank to provide for closed circuit TV and lighting for remote viewing during cutting and mining operations.

By 1996-2010, the planned retrieval campaign period, Hanford single-shell tanks will be 50 to 65 years old. Measured corrosion rates on low carbon tank steel using simulated wastes at historical predicted operating conditions plus the knowledge that 24 tanks are known leakers today, indicate that the steel liners should not be relied upon to hold liquid in or out of the tanks. Possible internal tank damage from historical boiling and bumping is not fully assessed. It is known that one tank bottom has buckled up about 6 to 8 feet due to steam formation between the concrete and the steel. Some tanks have been probed and are known to have flat bottoms. The condition of many tank walls and bottoms is unknown. Several tanks have risers that extend down into the solidified salt cake. The retrieval system and development plan described herein are designed to deal with the forementioned problems.

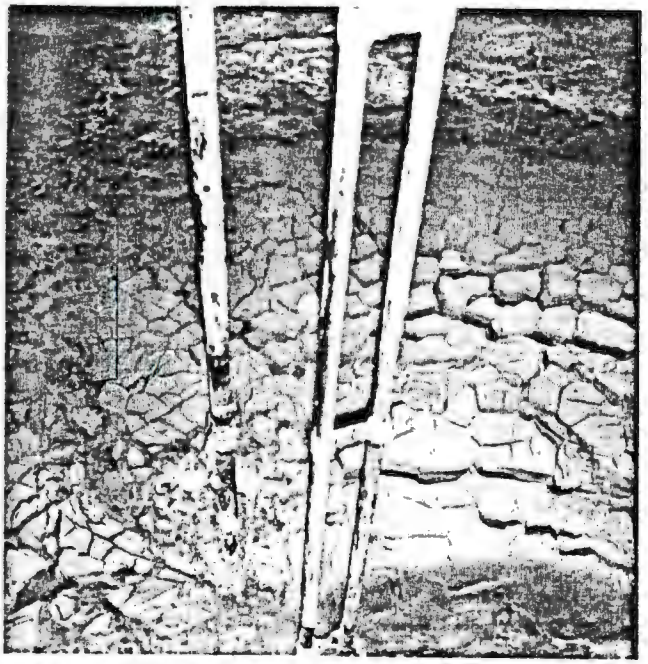

FIGURE 1-7. Waste After Addition of Diatomaceous Earth.

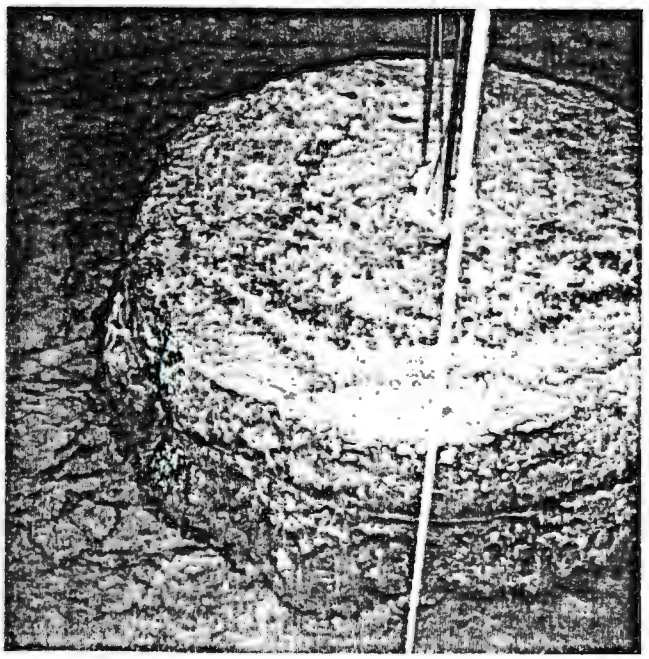

FIGURE 1-8. Salt Cake Encrustation.

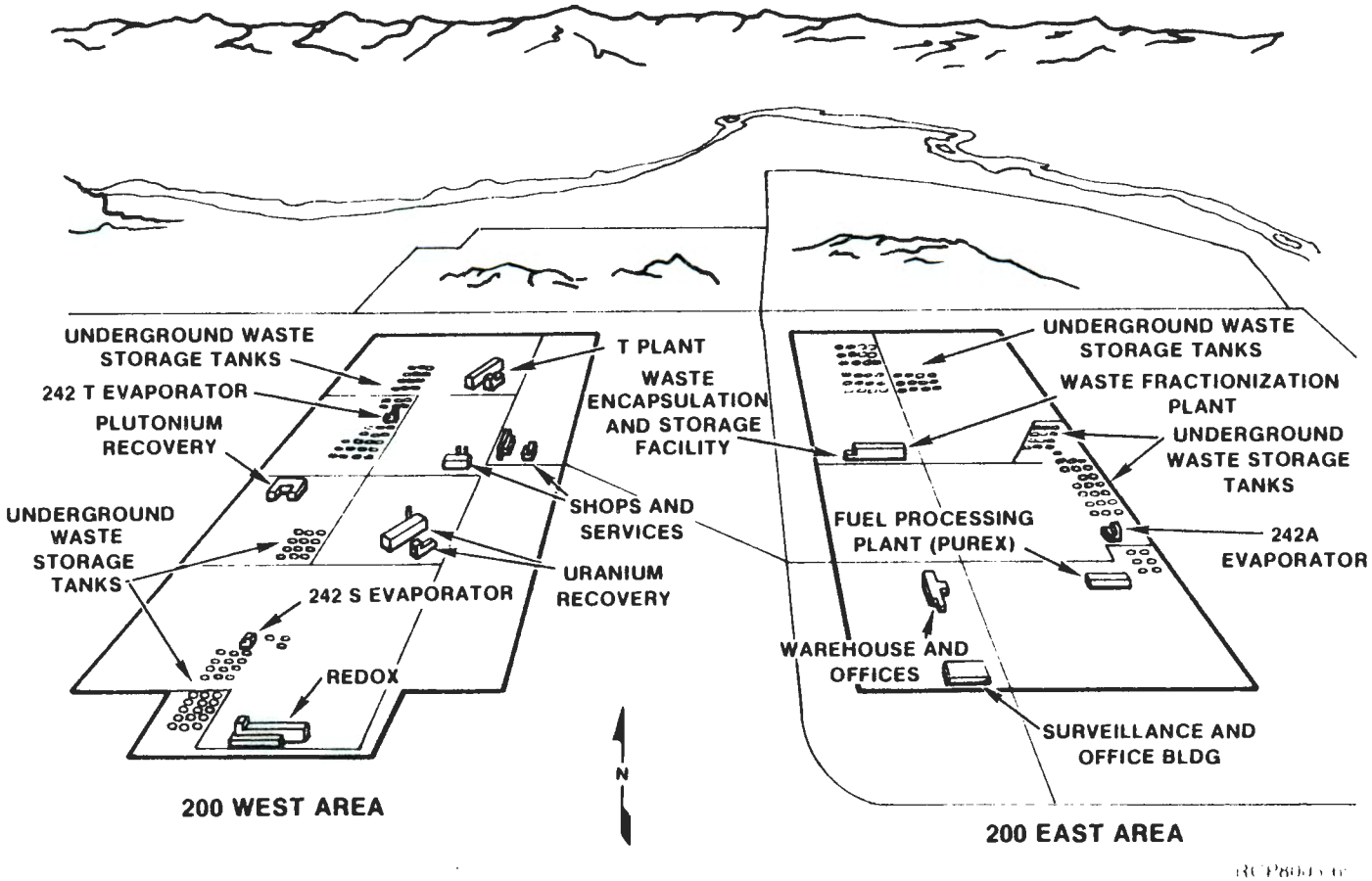

FIGURE 1-9. Hanford 200 Areas Plateau.

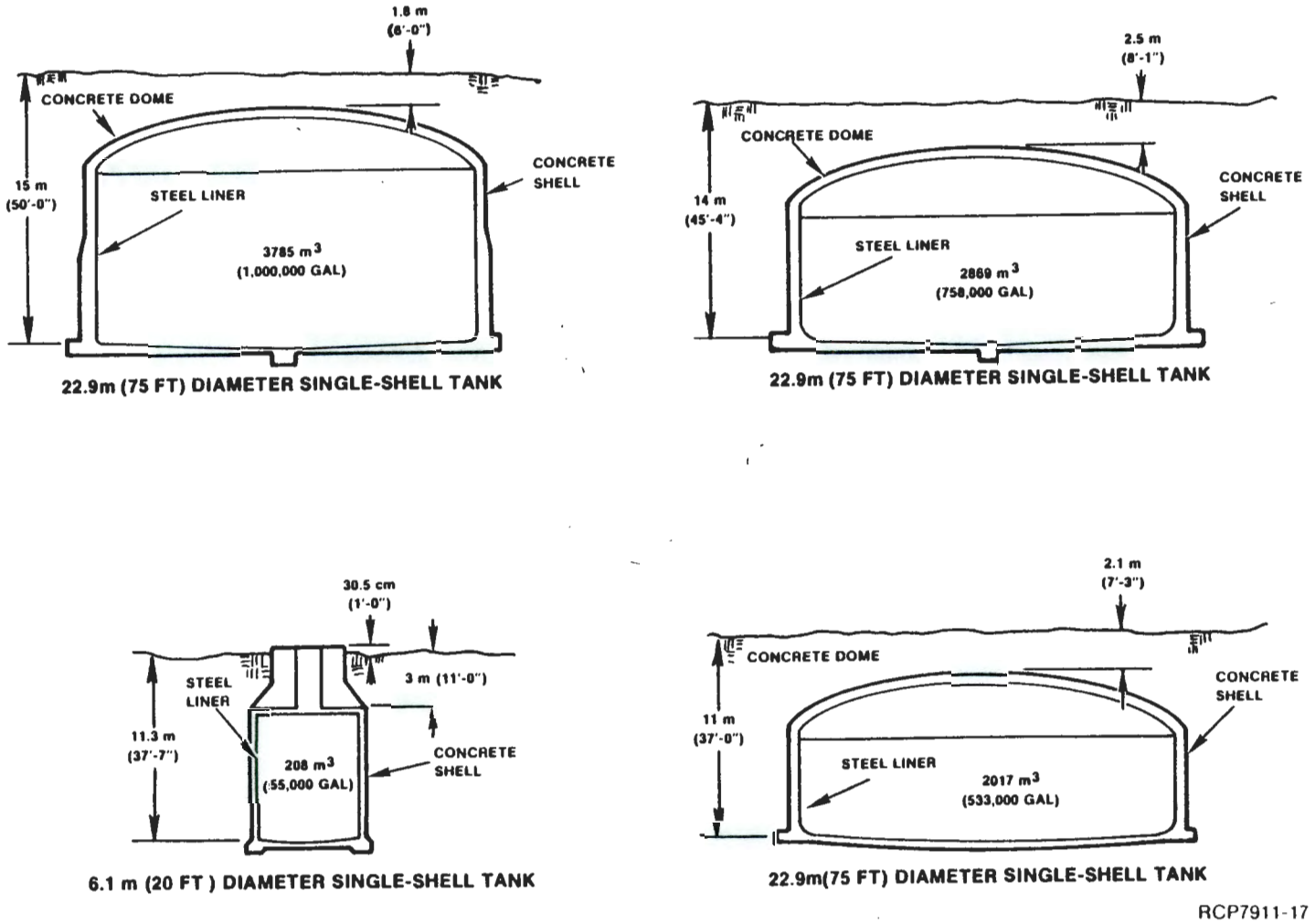

FIGURE 1-10. Single-Shell Tank Diagrams.

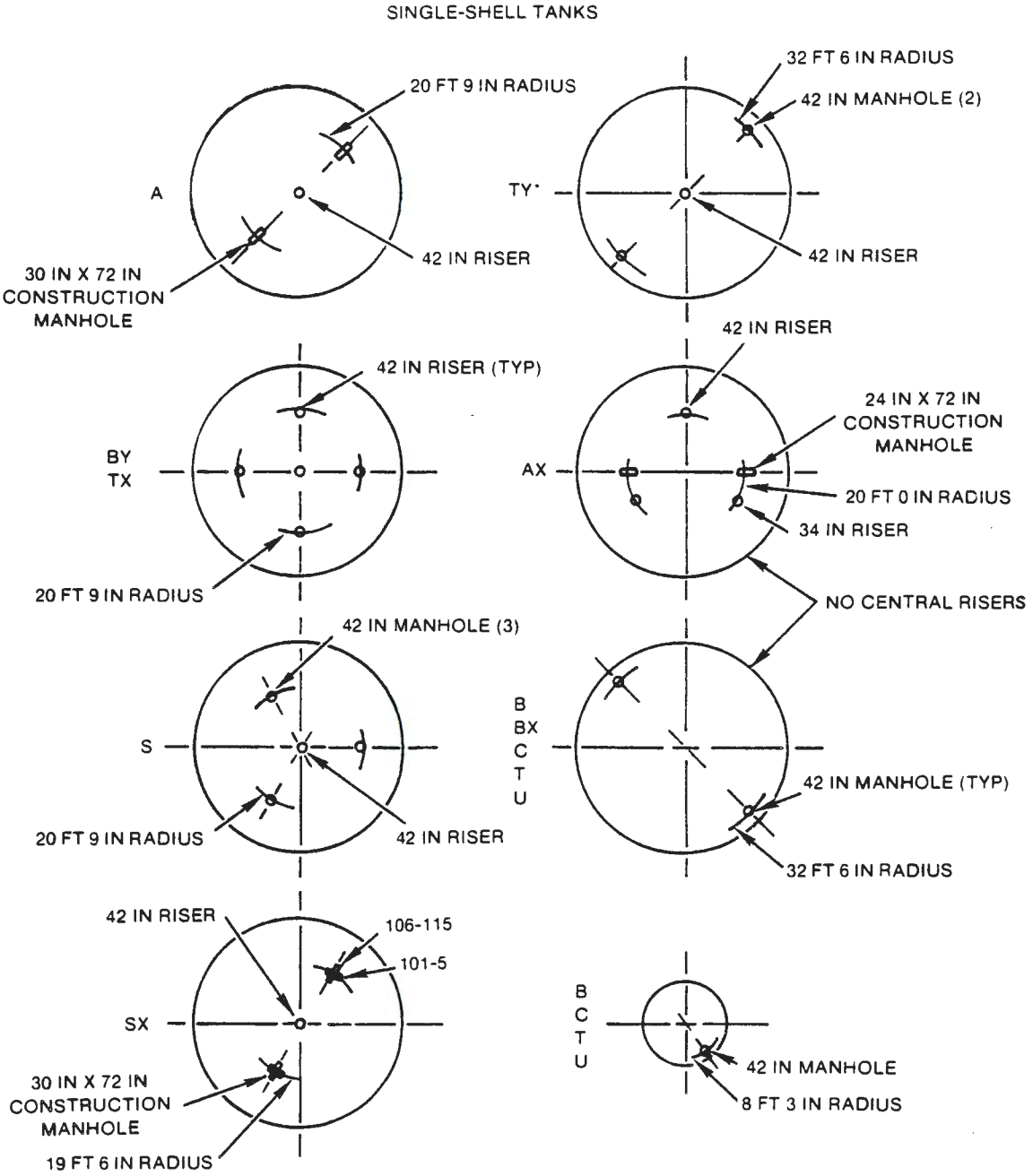

*TY TANKS CAN BE GROUPED WITH (B, BX, C, T, U) WITH THE ADDITION OF CENTRAL 42 IN RISERS TO THE LATTER.

FIGURE 1-11. Arrangement of (Large) Dome Penetrations: Single-Shell, Large and Small Tanks

1.3 SUMMARY OF DESIGN CRITERIA

The single-shell tanks are grouped in farms of 2 to 18 tanks per farm (typically 12) and, within each farm the tanks are arranged in a rectangular array with a center-to-center spacing of 100 or 102 feet. The tank farms are located in two general areas (200 East and 200 West) separated by about 5 miles. Within each area, individual tank farms are separated by as much as 1-1/2 miles. Objectives to be attained are:

1. Retrieve 5,100,000 ft^3 of high-level solid waste from 133 75-foot-diameter single-shell tanks.
2. Because of continuing tank wall deterioration, remove waste without addition of water or fluid to tank contents.
3. Because of structure limitations of tank domes, do not add significant load to domes beyond the existing 6 to 8 feet of earth cover load.
4. Provide mobility to platform to minimize downtime between tanks.
5. Provide for mining access and waste removal through 42-inch risers. Minimize requirement for new riser installation. Provide remote ability to internally cut-away entry risers to gain access into tanks where risers extend into salt cake.
6. Provide ability to cut up and remove solid debris and in-tank equipment.
7. Design to sludge activities of 0.2 to 2.8 curies, 0.66 MeV gamma per litre, 1.4 to 64 curies, 2.3 MeV beta per litre and 1.4 to 64 curies, 0.55 MeV beta per litre.
8. Provide for tank ventilation and provide radiological containment.
9. Provide safety for personnel and design to ALARA radiation exposures.

10. Retrieve waste at rate of 670 ft^3/day (170,000 ft^3/yr) at 80% operator efficiency (80% system availability), 85% payload per shipping container at two shifts per day per retriever at 600-gal/hr capacity, i.e., retrieve all waste in 10 to 15 years, ideally, with three retrievers.

11. Package waste and ship to an onsite processing facility or repository.

12. Provide for retrieval operations to commence by 1995.

13. Provide the research and development/engineering, equipment development, and subsystem demonstrations by 1986 that will provide a basis for cost, safety, and assurance of retrieval campaign success, and required for 1989 Line Item funding requests to be submitted in 1987.

1.4 SUMMARY OF SELECTION OF CONCEPT AND PURPOSE OF DESIGN STUDY

Waste retrieval refers to the recovery and removal of salt cake and sludge, and/or residual liquid, from the underground storage tanks and the transfer of these wastes to an onsite processing facility. Two basically different techniques are appropriate for retrieval of these Hanford high-level wastes: (1) mechanical dry mining for the retrieval of solid wastes (salt cake and sludge in older single-shell tanks; and (2) water jet sluicing and slurry pumping for the retrieval of residual liquor and sludge from newer double-shell tanks.

Over decades of use, 24 of the single-shell underground storage tanks have leaked. For this reason and because additional tanks may lose their ability to contain liquids in the decades before retrieval is completed, it was deemed appropriate to configure a waste retrieval system for mechanical recovery of the wastes in order to avoid adding more water to the single-shell tanks. The basic retrieval scheme is, therefore, to recover the solidified waste in its "as-is" state--either dry or in the form of damp sludge and salt cake. This process is composed of at least 12 sequential operations: (1) tank farm and tank preparation, (2) tank entry, (3) measures to cut loose dome supported equipment, (4) cutting of equipment and debris to small size, (5) in-tank recovery of debris, (6) removal of waste and debris from tank to a transfer point for emplacement in a shipping container, (7) transfer of waste to an onsite processing facility, (8) washing and returning shipping container to retriever, (9) maintenance of all equipment and/or replacement of parts, (10) cleaning of empty tank, (11) closing of tank, and (12) moving retriever to next tank.

The first consequence of the design criteria in early conceptual studies,[4,6,7] was an articulated arm for the mining boom. This device was envisioned to enter the tank through a vertical 42-inch riser located at the center of the dome structure and actuated, segment by segment, until the arm (with mining tool attached) was extended in a

horizontal position in the limited space between the top of the waste and underside of the dome. This articulated arm (a hydraulically-actuated 37-1/2-foot reach capability manipulator with 3000-lb lift capacity at full extension) was pictured mounted on a vertical telescoping tube assembly. This tube assembly would enable the mining of layers of waste through to the bottom of the fullest 1,000,000-gallon tanks. A similar telescoping tube mechanism was planned for material removal through an off-center 42-inch riser. The basic retrieval system concept was completed by the plan to support the mining and removal equipment on a platform carried by independently powered tracked transporters spaced a distance apart equal to the spacing of the tanks. Straddling the tanks in this manner would minimize the loads applied through the ground to the tank structure. An enclosed platform with controlled ventilation would also provide suitable housing for all remotely operated auxiliary equipment related to waste containerization, mining tool change, maintenance, repair, etc.

A complete system conceptual design was prepared in 1977 by the PaR Systems Corporation[6] in order to define the general arrangement of a viable system. After extensive in-house review, a failure modes and effects analysis of the mining boom and controls by the Richland Engineering Company, and some modification of subsystem details, a preliminary design was initiated in 1979 by Rockwell and Nuclear Systems Associates. The design study was completed in March 1980, and is reported herein.

The development and demonstration of retrieval system components is planned to be sequential, starting with the most complex. To minimize financial exposure and risk, the most difficult would be followed by the engineering of components, subsystems, and structures with decreasing complexity. The purpose of the detailed engineering (preliminary) design of the entire system is to ensure that developed components and subsystems will come together as a complete functioning system. Thus, this preliminary design will serve as a design configuration baseline.

All future design changes resulting from development and testing will be formalized to retain configuration control and to ensure successful integration.

2.0 PROTOTYPE RETRIEVAL SYSTEM DESIGN DESCRIPTION

2.1 SYSTEM DESCRIPTION SUMMARY

2.1.1 Function

The Prototype Waste Retrieval System (PWRS) is being developed to demonstrate the capability of safely removing the solidified wastes from all of the large 75-foot-diameter single-shell tanks at Hanford and delivering them to an onsite processing plant. The system includes all of the remotely operable equipment, controls, viewing systems, monitors, and alarms required to achieve safe and effective waste removal and handling.

2.1.2 Major System Elements

The basic arrangement of the PWRS is shown in Figure 2-1 as it might appear with the system operating in a tank farm. These eight elements contain everything that is necessary and sufficient to retrieve and transport the solid waste from the Hanford large single-shell tanks. A maintenance support facility required for actual waste retrieval operations phase is not included herein.

1. The waste retriever is the largest and most complex element. It is an enclosed multiroom mobile structure which straddles the underground waste storage tank. It incorporates the mining subsystem, the material removal subsystem, the container handling subsystem, the retriever platform structure, and the retriever ancillary equipment. These subsystems are for entering the waste tanks, mining the waste material, transferring the waste into the retriever, loading it into shielded shipping containers, washing the shipping containers, placing the shipping containers into secondary sealing containers, and loading the container sets onto vehicles for transport to the waste processing plant.

2. The independently powered crawler transporters enable the waste retriever to be moved from tank to tank.

3. The waste container set consists of a shielded shipping container inside an unshielded sealing container, providing double containment during handling and transport from the retriever to the onsite processing plant or repository.

4. The waste transfer vehicle safely transports filled waste containers to the waste processing plant and returns cleaned empty containers to the retriever. Each vehicle is equipped with a tie-down fixture and protective energy-absorbing cover to protect the containers in the event of an accident.

5. The control trailer houses most of the monitors, instruments, and controls for the entire system. The trailer can be parked outside the boundaries of the tank farm being mined to minimize routine exposure to the operating personnel. Most of the operations in the retriever and all of the mining operations within the tank to which the retriever is attached are remotely controlled from the control trailer.

6. In-tank closed circuit television (CCTV) viewing and lighting units are capable of inserting a television camera and lights into the tank through a 12-inch riser to allow viewing of all in-tank waste retrieval operations.

7. The primary ventilation unit consists of a skid-mounted blower and banks of filters connected to a 12-inch or larger riser. It maintains the tank and retriever at slightly below atmospheric pressure for contamination control during the entire time that the retriever is connected to the tank.

8. The standby generator trailer is provided to ensure that all vital radiation containment and monitoring functions can continue in case site electrical power is interrupted.

2.1.3 Waste Retriever Summary Description

The waste retriever is the principal element of the PWRS. All mining, removal and packaging of waste for shipment is done by this remotely operated unit. It consists of a large enclosed structure divided into

rooms containing the appropriate equipment to accomplish all of its tasks (Figures 2-2, 2-3, 2-4).

The mining operations are accomplished by the articulated mining boom which enters the tank through a port in the mining room floor coupled to the tank's central riser. Several kinds of mining tools can be attached to the end of the 4-segment articulated arm of the mining boom. This is accomplished by the tool change machine. When not in use, the tools are stored on the tool storage racks in the mining room or can be placed by the tool change machine on the wash cart in the tool wash station. Through the use of the appropriate tools, the articulated arm is used to cut away obstructions, mine the waste, and place it into the material elevator bucket. Mining tools have a removal capacity of 4 cubic feet of waste every 3 minutes.

Each 18 minutes the material elevator lifts the 24-ft^3-capacity filled bucket upward through an off-center riser, into the filling room of the waste retriever. The waste is dumped into the 96-ft^3-capacity shielded shipping container through a funnel. The shipping container is on a 3-station turntable inside the turntable compartment. As one container is being filled, a filled container is being washed at the second station and another filled container is removed and replaced with an empty one at the third station. When a container is full, the funnel is removed and the lid replaced and locked on the container by the lid handling machine. Then the hatch covers--one at the fill station and one at the loading/unloading station--are closed and the turntable rotates a third of a turn (120 degrees) to index each container to a succeeding station. The filled, sealed, and washed shipping container is lifted from the turntable by the 25-ton crane and placed inside a sealing container which provides double confinement for the wastes. Similarly, a clean, empty, shipping container is removed from a recycled sealing container and placed on the turntable load station. The 25-ton crane is also used to place and remove the lid on the sealing container, transfer the container set between the retriever and the waste transfer

vehicle and to place and remove the vehicle mounted protective cover. One 96-ft^3 shipping container should be loaded every 72 minutes during normal (unobstructed) mining operations.

In addition to the primary equipment for waste mining and removal, the retriever houses most of the needed support hardware. A 2-ton overhead crane, an electro-mechanical (E-M) manipulator, and master-slave (M-S) manipulators are available for remote maintenance and repair of the equipment in the mining and filling rooms. The 2-ton crane and E-M manipulator can also operate in the tool maintenance room, where some contact maintenance may also be performed. The mining tools can be transferred to the maintenance room from the wash station via the wash cart. The maintenance room also contains a 2-ton, double-monorail hoist and a door to the outside so that mining tools, equipment, and parts may be brought into or removed from the retriever. An airlock and personnel shower is provided between the maintenance room and personnel corridor. From the personnel corridor, the activities in all of the rooms may be viewed through shielding windows and, when necessary, the equipment in them can be operated by using the auxiliary control panels. Also included in the retriever are a power center room, a secondary ventilation unit, a complete wash down system, and appropriately placed CCTV cameras for remote viewing.

PROTOTYPE WASTE RETRIEVAL SYSTEM

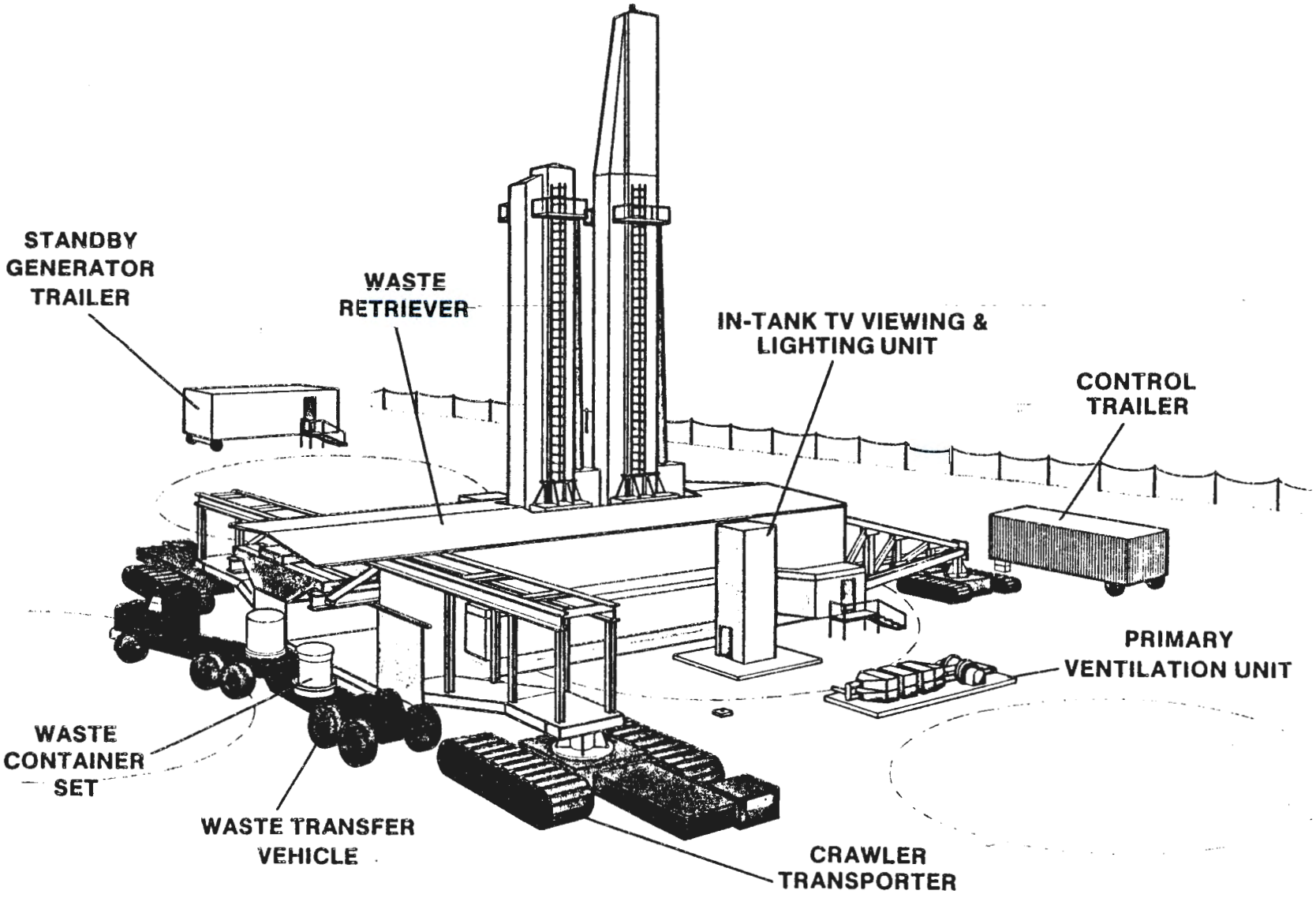

FIGURE 2-1. Prototype Waste Retrieval System.

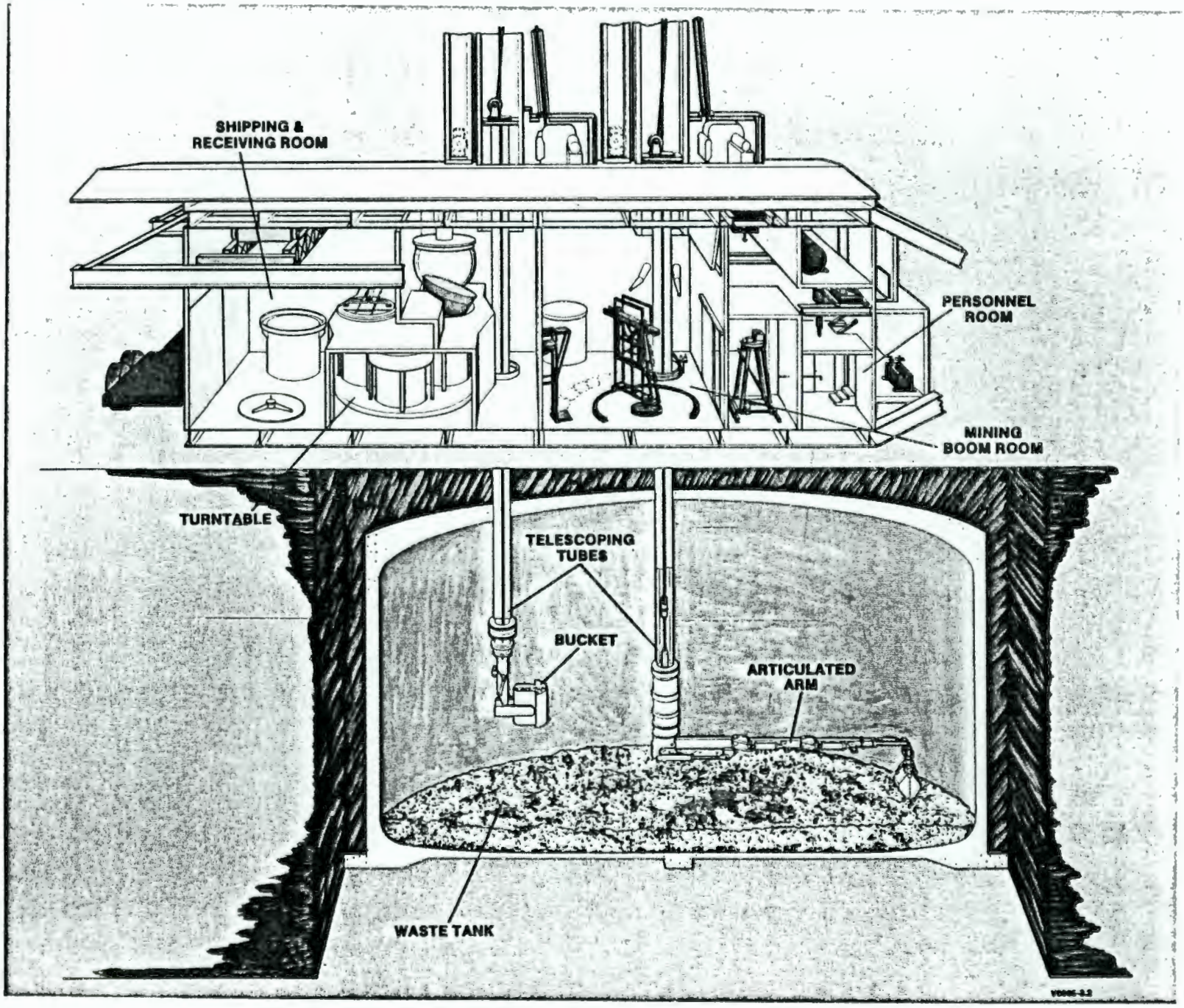

FIGURE 2-2. Section of Waste Retriever.

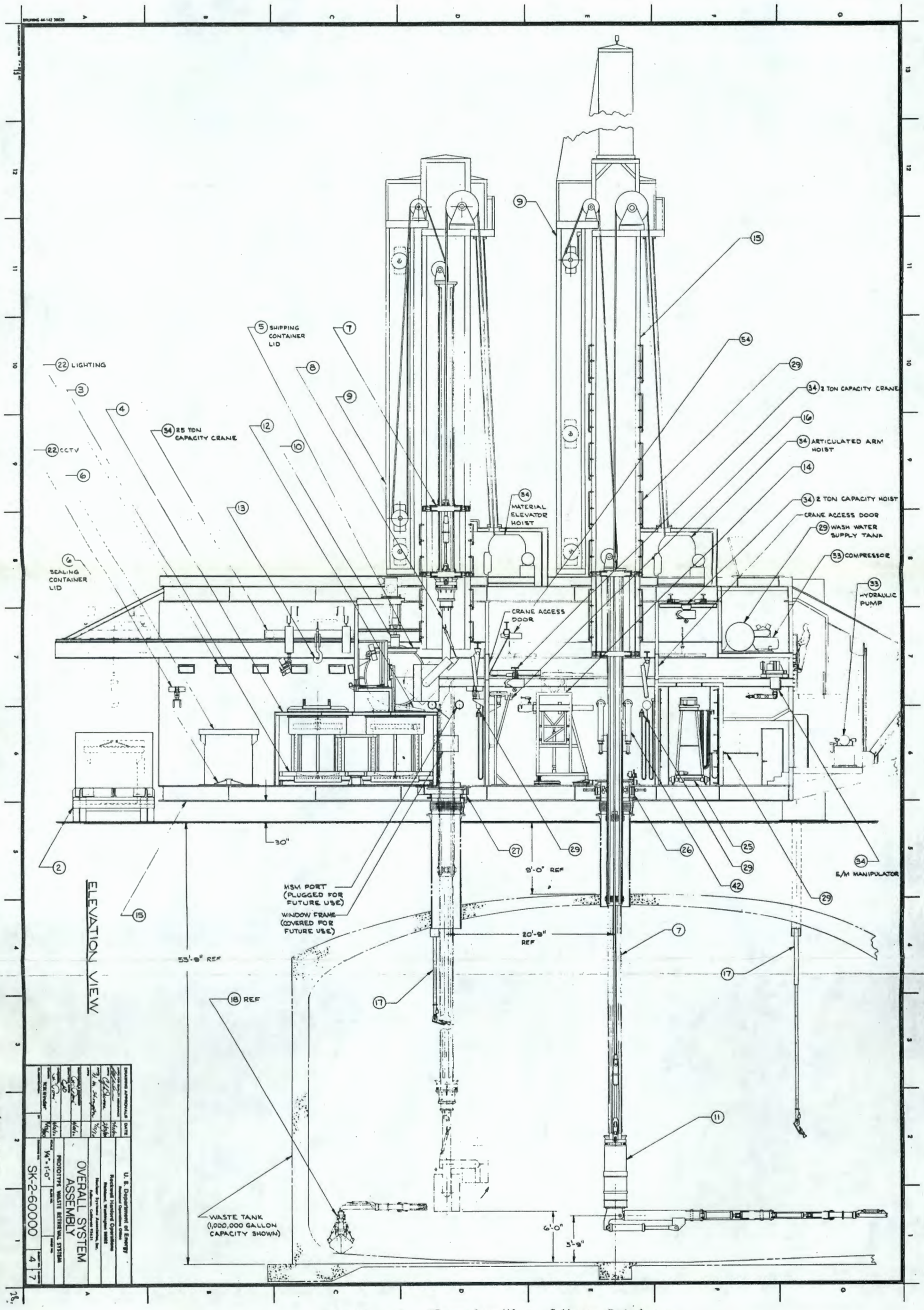

FIGURE 2-3. Elevation View of Waste Retriever.

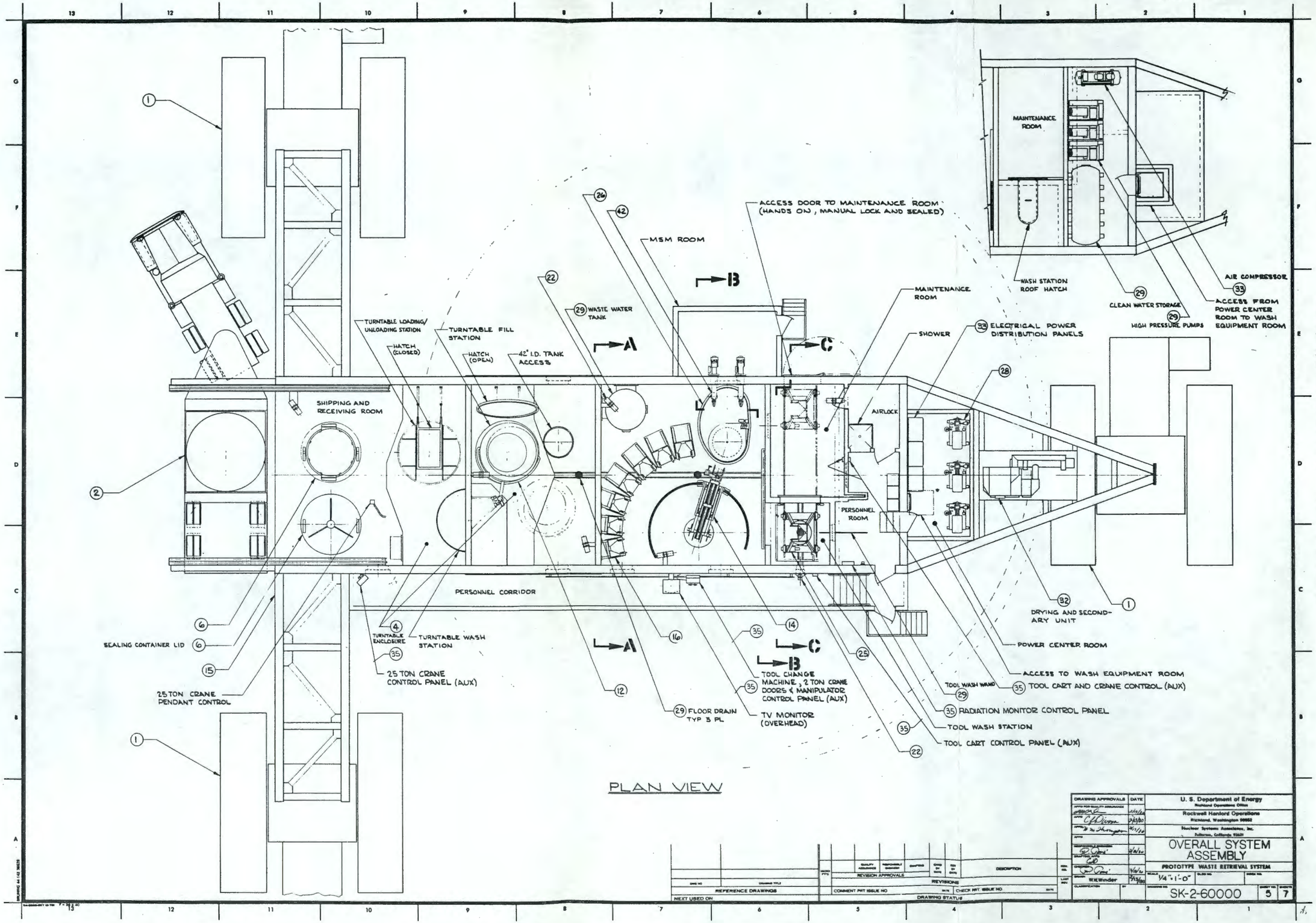

FIGURE 2-4. Plan View of Waste Retriever.

2.2 MINING SUBSYSTEM AND CONTROLS

All work done inside the tank from the initial obstruction removal to the final cleanup will be performed by the mining boom. The mining boom subsystem consists of a remotely controlled articulated arm with four pivoting sections, a hoist assembly to lower and raise the articulated arm, a telescoping tube assembly to guide and laterally support the articulated arm, a lower support mechanism, and a counterweight assembly to control cable and hose slack during lowering and raising operations, the boom-mounted tools, and the tool change machine. The mining boom, equipped with a variety of interchangeable mining tools, extends down from the waste retriever into the underground waste tanks to break or cut up hard waste material including pipe, equipment or other debris along with the salt cake and sludge, and deposit it into the material elevator bucket for transfer out of the tank. The mining boom is capable of handling a maximum weight of 3000 lbs, and consists of a mining tool and its load of waste material.

2.2.1 Articulated Arm

The articulated arm is mounted on the lower end of the telescoping tube. The total length of the articulated arm from the telescoping tube interface to the mining tool interface is 35 feet, 11 inches (hanging vertical). The cross-sectional dimensions are such that the complete assembly can pass through a 42-inch-ID waste tank riser with a nominal 2-inch clearance. The articulated arm, fabricated of high strength stainless steel, includes a rotation assembly, a main pivot support, four pivoting sections, and a tool adapter. The total weight of the articulated arm is 15,000 lbs (Figure 2-5).

The rotation assembly, mounted on the lower end of the inner telescoping tube is 7 feet, 8 inches long with a maximum cross-sectional diameter of 28 inches. The assembly consists of two concentric stainless steel cylindrical housings connected by two 30-inch-diameter bearings. The inner housing is attached to the articulated arm and the outer housing is attached to the telescoping tubes. A 2-hp high-torque

hydraulic motor and harmonic drive are mounted in the outer housing. By means of a pinion, idler and ring gear arrangement, the drive system rotates the inner housing and thereby the articulated arm ±185 degrees about its vertical axis. The rotation system is equipped with pneumatic brakes so that the articulated arm rotation can be locked.

The main pivot support is mounted on the bottom of the rotation assembly and contains the main pivot joint of the articulated arm. The first arm section pivots about the main pivot joint. The remaining three sections pivot about the section to which they are attached. Each section is capable of pivoting -10 to +90 degrees relative to the main pivot axis. The first section is 14 inches square, 8 feet, 10 inches long (from pivot axis to pivot axis), and is pivoted by two hydraulic cylinders attached to the main pivot housing. The next two sections are 12 and 9 inches square, respectively. These sections are 8 feet, 7 inches long and each is operated by a single hydraulic cylinder. The outer (fourth) section is 1 foot, 5 inches long and is operated by a single hydraulic cylinder. The outer section also provides the adapter for remotely attaching the mining tools. The major arm segments are fabricated from stainless steel in order to accommodate rigorous decontamination.

The articulated arm tool adapter consists of a V-band type flange, a male bayonet-type extension and two acme screw operated clamp arms. Each mining tool is equipped with a matching bayonet cavity and flange. When a tool is mated with the articulated arm, using the tool change machine, a remote pneumatic nut runner on the change machine rotates the acme screw, thereby clamping the tool to the articulated arm. Electrical and hydraulic quick disconnects operated automatically are included on the adapter (Figure 2-6).

The hydraulic and electrical components (valves, cables, hoses, etc.) are mounted on the outside surfaces of the arm sections for maintenance access. Detailed design is planned to modularize these components for quick remote replacement. Protective guards are placed around

the components to avoid damage during operation. Hoses and cables are routed through the rotation assembly to the telescoping tube interface where they mate with corresponding lines. A rotating coaxial flow union is included in the rotation assembly axis for the hydraulic lines.

The hydraulic actuators of the articulated arm are controlled by zero-center servo flow control valves. Proportional opening of the valves is achieved by driving the torque motor windings of these valves with current from servo amplifiers. The amplifiers are controlled by positional error signals derived from the position transducers on the equipment and compared to command signals from the master control system. The position transducers are coupled as closely to the actuators as practical to eliminate structural dynamics from the feedback loop. Although very large and high inertia components make up the articulated arm, the required speeds and positioning accuracies are modest, so that additional compensation for velocity and pressure feedback should not be required.

2.2.2 Controls

The articulated arm is operated from the control trailer using manual controls or an automatic pre-programmed system in conjunction with CCTV. In the manual control mode, each articulated joint, the hoist, and the main rotation drive are controlled by a single axis lever. Each motion has continuous control except the hoist which has five discrete speeds. Each manual control handle is spring-loaded back to center and the potentiometer wiper, coupled to the handle, rests in a dead zone region that assures a zero output signal at center. A zero input into the servo assures a no-motion, no-drift output.

There are three automatic modes of operation available to control the articulated arm. One is by means of a replica arm which is a small scale version of the articulated arm that has the three outboard pivot joints and the main rotational motion of the articulated arm. The replica arm is on a horizontal control panel and is moved by the operator over a coordinate grid. Thumbwheel operated friction devices can lock

the replica arm in any position. The replica arm simulates the in-tank motions of the articulated arm with the main support joint rotated to 90 degrees so as to put the path of the articulated arm motions in a horizontal plane which will be the usual configuration for operation. Each joint of the replica arm is used to directly control the corresponding joint on the articulated arm through a closed loop positional servo system. Position sensors on the replica arm are the command input to the system. After an initial synchronization, the articulated arm will follow the motions of the replica arm and match its configuration in the horizontal plane. The replica arm is then used to provide end-of-arm (tool) coordinates and joint configurations for mining points, dumping points (at the material elevator bucket), and in-tank obstacles. When the desired coordinates and particular configurations are set, that information can be sent directly to the memory of the computer system by control buttons.

The coordinates are used in the computer control mode of the articulated arm. In this mode, the arm is sent, without operator guidance, directly from one point in the tank, such as a mining point, to another, such as the dumping point above the material elevator bucket. In this mode, each articulated arm motion again operates as a closed loop positional servo system going to a command position derived from the computer's memory.

Since the automatic positioning mode is not controlled by the operator, except for starting the movement, it is important that collisions of the arm with objects in the tank do not occur. Therefore, an obstacle avoidance scheme is provided. The replica arm is used to define the location of the obstacles in the computer system. Appropriate programming can have the computer system provide an obstacle-free path to the desired destination. An alternate method that requires less sophisticated programming and more operator awareness involves using the replica arm to define a series of destinations in short path segments that clearly avoid obstacles. The articulated arm would pause

slightly at each destination and resume motion with very little increase in travel time. Although the path and times may not be optimal, this method would provide the operator with a better sense of control over the system and is therefore planned for initial operation. In addition, lockout zones can be established. When the articulated arm is in manual control and the operator tries to move into a lockout zone, an alarm sounds, the appropriate controls are disabled, and all motions stop.

Another feature of the articulated arm control is that of mitigating the effects of collision. This feature applies in case of failure of the obstacle avoidance system. Signals from differential pressure sensors across each actuating piston and motor are fed back to the control valve amplifier, so as to decrease the forward driving signal and even reverse it when pressure builds up on the driving side of the piston to a value higher than that just required to move the arm. This braking action plus the resilience of the arm and the probable resilience of the object struck will absorb the kinetic energy of the moving arm without allowing excessive forces to build up that could damage the arm.

The third automatic control mode is the sequential control mode used for operations such as inserting the articulated arm into the tank. In the sequential mode, each step is controlled by pushbuttons arranged in vertical columns. (This mode of control is explained in greater detail in the waste removal subsystem description.)

2.2.3 Telescoping Tube Assembly

The telescoping tube assembly consists of an inner and outer telescoping tube, and a carriage assembly which travels vertically within the mining boom tower of the retriever. It provides the articulated arm, mounted on the lower end of the inner tube, with a total vertical travel of 100 feet so that the arm can be operated at the bottom of the deepest tank or completely withdrawn into the retriever tower for washing (Figure 2-7).

The square tubes in the corners of the retriever tower function as guide rails for the carriage. Roller assemblies mounted on the ends of the carriage mate with the tower rails to guide the carriage as it travels up and down within the tower. The outer tube travels vertically within the carriage assembly and is guided by roller assemblies mounted on the carriage frame. The inner tube travels within the outer tube and is guided by rollers mounted in the outer tube.

The articulated arm is lowered and raised from the waste tank by means of two wire rope hoist cables attached to the bottom of the inner tube. The hoist cables support the weight of the articulated arm, its maximum tool load, the inner and outer telescoping tubes, the carriage, and the dynamic loads during up and down travel. The telescoping tubes and carriage provide only guidance and lateral stability during articulated arm operations.

The rectangular carriage is 11 feet long and is fabricated from square tubing and plate. The telescoping tubes are fabricated from 1-inch plate. The inner tube is 18 inches square and approximately 42 feet long and the outer tube is 22 inches square and approximately 42 feet long. The tubes and carriage weigh about 15 tons. When the articulated arm system is completely lowered, the carriage is positioned at the bottom of the tower. The outer telescoping tube is fully lowered within the carriage and the inner telescoping tube is fully lowered within the outer tube. The carriage is supported by the tower structure (stops) and the outer telescoping tube is supported by the carriage. However, the articulated arm and the inner telescoping tube remain suspended on the hoist cables.

To retract the system from the tank, the articulated arm and inner tube are raised by the hoist cables. The inner tube travels within the outer tube until brackets at the bottom of the inner tube contact the bottom of the outer tube. The outer tube then travels upward with the inner tube and the articulated arm. The outer tube travels within the carriage until the inner tube brackets contact the carriage. The carriage then travels upward with the other units. When the articulated

arm is completely enclosed by the tower (tool removed), the carriage is positioned near the top of the tower and the telescoping tubes are fully elevated within the carriage. When the articulated arm system is lowered back into the tank, the system operates basically in the reverse order described above. Shock absorbers are incorporated into the system to prevent damage and shock when the telescoping tubes and carriage come in contact during raising and lowering operations.

2.2.4 Support Mechanism

A support mechanism is required to provide lateral rigidity during routine mining operations.

The support mechanism consists of four hydraulically operated cylinders mounted in the support housing positioned below the main retriever support structure floor. At the end of each hydraulic cylinder rod is a limited-motion, pivotable brake shoe. The hydraulic cylinders are positioned to extend inward to provide lateral support of the square telescopic tube of the articulated arm during the mining operation. The double acting hydraulic cylinder's 3-inch-diameter bore by 7-inch stroke can provide a 7200-lb maximum force during a maximum applied moment on the articulated arm. The overall dimensions of the support mechanism are 90 inches long by 19.38 inches high, and weighs approximately 250 lbs. The support mechanism is operated from the control trailer by an automatic preprogrammed control system during the mining operations in the tank.

2.2.5 Hoist Assembly

The hoist assembly consists of a 25-ton minimum capacity hoist unit, two sheave assemblies, and two turnbuckle assemblies with cables guided outside the telescoping tubes for ease of inspection and maintenance.

The hoist unit is located at the base of the tower on the retriever roof. Its major components are a 25-hp drive motor, a speed reducer, a double drum wrapped with two 1-1/4-inch-diameter wire ropes, and two

independent brakes each rated at 150% of hoist capacity. One of the brakes will automatically control the load during lowering and the other will stop the hoist drum when system or motor power is interrupted. The system is equipped with limit switches to prevent overtravel and an encoder to indicate the telescoping tube position with an accuracy of 1/4 inch.

The cables are routed from the hoist to the top of the tower and over the two sheave assemblies. Each sheave assembly consists of a 4-foot, 3-inch-diameter sheave and associated support brackets. The sheaves are positioned such that the hoist cables are lowered from the sheaves directly through the telescoping tube carriage structure to the inner telescoping tube. The cables are attached by pins to turnbuckle assemblies which, in turn, are attached by pins to the outer lower flange of the inner telescoping tube. The turnbuckle assemblies provide capability for equalizing cable tension. They also provide the means of securing the telescoping tube system and articulated arm to the tower structure during maintenance and cable removal.

Load cells are incorporated into the sheave assemblies to detect "hangups" and load changes in the mining boom system. Controls for the hoist are located in the control trailer as part of the articulated arm controls (discussed in paragraph 2.2.1.1).

2.2.6 Counterweight Assembly

The counterweight system is utilized to control electrical cable and hydraulic-pneumatic hose slack created between the stationary ends and the vertically traveling ends during articulated arm lowering and raising operations. The system consists of a traveling counterweight assembly, a cable-and-hose assembly, two wire rope sheave assemblies, and an enclosure.

The 3-ft^2 by 44-ft-high enclosure is mounted on the side of the retriever tower. Vertical tracks in the enclosure mate with the V-grooved rollers to allow the counterweight assembly to travel the

full length of the enclosure. Lead weights, a 2-foot-diameter wire rope sheave, and a mounting plate make up the rest of the counterweight assembly.

The cable assembly consists of a 3/8-inch wire rope and the electrical cables and hydraulic-pneumatic hoses connecting the articulated arm with the retriever power and control systems. The hoses and cables are clamped to the wire rope approximately every 5 feet. In this manner, the hoses, cables, and wire rope are grouped together as units controlled and positioned by the wire rope. The wire rope sheave assemblies guide and control the cables and provide suitable bend radius. One sheave assembly is mounted above the counterweight system enclosure and the second is mounted above the outer telescoping tube.

The cable assembly is attached directly above the inner telescoping tube with the wire rope anchored and the cables and hoses connected to corresponding lines from the articulated arm by means of a bulkhead panel. The cable assembly is routed over the outer telescoping tube-mounted sheave above the counterweight enclosure, around and below the counterweight assembly sheave, and returned to the enclosure top where the wire rope is anchored and the cables and hoses are connected to a bulkhead panel. Hard lines and cables from the retriever power systems are connected to the other side of the panel.

In operation, as the articulated arm and telescoping tube system ascend from minimum elevation to where the sheave on the outer telescoping tube is level with the enclosure-mounted sheave, the counterweight descends. As the arm and telescoping tubes continue upward to the maximum elevation (fully retracted), the counterweight returns upward.

The total cable slack generated is 99 feet, 5 inches (total articulated arm travel). The counterweight travels 35 feet, 1-1/2 inches downward and 14 feet, 7 inches upward while controlling the slack. When the articulated arm is returned into the tank, the counterweight system operates in the reverse order described above.

A load cell is provided where the wire rope is anchored to the counterweight enclosure to detect problems with the counterweight assembly travel.

The counterweight assembly structure components are fabricated from carbon steel coated with epoxy paint.

2.2.7 Mining Boom Tools

Six tools have been designed to be remotely attached to the working end of the articulated arm using a common adapter interface and remotely operated from the control trailer. These consist of a clam bucket, a backhoe, an impact hammer, a rod and cable cutter, an object handling tool, and an external pipe cutoff tool. They are designed to remove in-tank obstacles, break up hard waste material, and deposit waste material in the material elevator bucket. When not in use, the tools are stored on racks located in the mining room. All tools are fabricated from stainless steel for corrosion resistance and ease of washing.

2.2.7.1 Adapter Assembly. The adapter assembly, common to all mining tools, is located at the proximal end of each tool and facilitates remote attachment to the articulated arm. It includes quick disconnects for hydraulic and electrical lines, a sleeve for mating with the mounting stub of the articulated arm, and for handling lugs to position and support the tool when in the tool change machine, in the storage racks, or on the maintenance cart (Figure 2-8).

2.2.7.2 Clam Bucket. The clam bucket picks up waste material from any location in the waste storage tank and transfers it to the material elevator bucket. The clam bucket has conventional clamshell type action, and is mounted on a pivoting support arm. It is capable of handling 4 ft^2 of waste material weighing up to 425 lbs whether thick slurry, chunks of salt cake, or miscellaneous debris. Major components are the bucket assembly, the support arm, and the common adapter assembly. The bucket assembly consists of two pivoting bucket halves suspended from a support housing, each operated by a hydraulic cylinder with

a 4000-lb force capability at the bucket cutting (lower) edge. Closed, the bucket assembly is approximately 20 inches wide by 33 inches long by 32 inches deep (Figure 2-9).

The bucket assembly (bucket halves and housing) is suspended from the end of the support arm by means of a universal joint and a rotation joint. The universal joint allows the bucket to hang vertically from the distal end of the support arm and automatically adjust angular positions as the support arm pivots and the bucket halves dig into waste material. The rotation joint, operated by a hydraulic rotary actuator, is capable of rotating the bucket assembly ±180 degrees about its vertical axis, thus allowing the bucket to be oriented before it is lowered into the waste material.

The support arm is approximately 52 inches long, 6 inches square in cross section, and is attached to the articulated arm adapter assembly by means of an additional pivot joint. The pivot joint, operated by a 4-inch-diameter hydraulic cylinder, provides the capability of pivoting the support arm downward a maximum of 90 degrees from its horizontal position. The rotation joint, universal joint, and pivot joint facilitate complete tool maneuverability during mining operations.

The tool is 5 feet, 6 inches from the tip of the bucket assembly to the forward pivot joint and 5 feet, 10 inches from the forward pivot joint to the tool-articulated arm interface. The total length of the tool, when hanging vertically, is 11 feet, 4 inches and the weight is 1380 lbs.

2.2.7.3 Backhoe. The backhoe tool is used in the waste storage tank to break up medium-hard waste material, move and scrape waste material into piles suitable for pickup by other tools, transfer waste to the material elevator and scrape waste material from the tank walls. The remotely operated backhoe consists of a conventional backhoe-type bucket mounted on the end of a pivoting, rotating support arm. The backhoe bucket capacity is 4 ft^3 of waste material (or 425 lbs). Its major components are the bucket assembly, the support arm, a rotation assembly, and the adapter assembly common to all the tools (Figure 2-10).

The bucket is approximately 20 inches wide by 26 inches long by 26 inches deep and is attached to the distal end of the support arm by a pivot joint. The bucket is capable of pivoting 180 degrees about the end of the support arm and is operated by four linkages and a 3-1/4-inch diameter hydraulic cylinder.

The support arm is approximately 69 inches long, 6 inches square in cross section and is attached at the proximal end to the rotation assembly by means of an additional pivot joint. The pivot joint provides the capability of pivoting the support arm downward 45 degrees from its horizontal position and is operated by a 5-inch hydraulic cylinder.

The rotation assembly, located directly behind the rear pivot joint, provides the capability of rotating the bucket-support arm assembly ±100 degrees about its horizontal axis. The rotation assembly is operated by a hydraulic rotary actuator. The support arm pivot joints and the rotation assembly, facilitate complete tool maneuverability during mining operations.

The total length of the tool (extended) is 11 feet and it weighs 1564 lbs.

2.2.7.4 Impact Hammer. The impact hammer mining tool is used to break up hard layers or deposits of waste material in the storage tank. It consists of a commercially available hydraulic "backhoe" impactor mounted on the end of a support arm. The hydraulic impactor is capable of exerting 125 foot-pound minimum impact energy at a minimum rate of 800 blows per minute. The major components of the impact hammer consist of the impactor, the support arm, a rotation assembly, and the adapter assembly (Figure 2-11).

The impactor is 44 inches long (including the tool), the maximum cross section dimension is 11 by 16 inches, and its weight 291 lbs. It is operated by a hydraulic motor-cam and spring arrangement. The impactor is attached to the forward end of the support arm on a pivot joint capable of rotating 90 degrees about the end of the support arm to a point in line with the tool centerline, or at varying angular positions

to a point perpendicular with the centerline. The impactor is rotated by four linkages and a 3-1/4-inch hydraulic cylinder.

The support arm is approximately 47 inches long, 6 inches square in cross section, and is attached at the rear to the rotation assembly by means of an additional pivot joint. The joint allows the support arm to pivot downward 45 degrees from its horizontal position and is operated by a 5-inch hydraulic cylinder.

The rotation assembly, located directly behind the rear pivot joint, allows the impactor-support arm assembly to rotate ±180 degrees about its horizontal axis. The rotation assembly is operated by a hydraulic rotary actuator. The support arm pivot joints, the impactor rotation system, and the tool rotation assembly provide complete maneuverability for placement of the impactor tool. The combination of hydraulic cylinders and linkages allows a pre-load of 2500 lbs to be exerted on the impactor tool. The total extended length of the tool is approximately 10 feet, 7 inches with a weight of 1515 lbs.

2.2.7.5 Rod and Cable Cutting Tool. The rod and cable cutting tool is used to cut off and chop up small (maximum 2-inch-diameter) pipe, tie rods, cable, hoses, etc., in the waste tank. It consists of a commercially available rod and bar cutter, a rotation assembly, a support arm and the standard tool adapter assembly (Figure 2-12).

The rod and bar cutter is approximately 21 inches long with a cutting head 2 by 8 inches in cross section and is operated by a hydraulic ram with a cutting force capability of 85 tons. The cutter is attached to a hydraulic rotary actuator with a cylindrical adapter which enables the cutter to rotate 135 degrees about its longitudinal axis.

The cutter and the rotation assembly are attached to the support arm by a pivot joint operated by an additional hydraulic rotary actuator. The actuator permits the cutter to pivot ±75 degrees relative to its extended position (cutter centerline in line with tool centerline).

The support arm, which is 29 inches long and 7 inches square in cross section, is attached directly to the adapter assembly. The total extended length of the tool is 7 feet; the weight 853 lbs. Mounted on the support arm along with the hydraulic valves is a pressure booster which increases the 1500 psi supply pressure to the 6000 psi required to produce the 85-ton force.

2.2.7.6 Object Handling Tool. The object handling tool is utilized to pick up and move miscellaneous objects in the tank, transfer them to the material elevator and deposit them in its bucket. The object handling tool is capable of handling a maximum load of 1000 pounds and consists of a clamping assembly, a clamping head rotation system, a support arm, a tool rotation assembly, and the standard adapter assembly (Figure 2-13).

The tool clamping arms which form the clamping assembly are attached by pivot joints to the head rotation system and operate in similar fashion to the bucket halves of a clamshell. Each clamp arm is 1-1/2 feet long with a 3- by 3- by 23-inch long-angle clamping bar at its end. Each clamp is operated by hydraulic cylinders capable of pivoting 40 degrees from a fully closed position (angles together) to a fully open position (23 inches between clamp bars).

The clamping assembly is attached to the forward end of the support arm by a rotation assembly and a pivot joint. The rotation assembly, operated by a hydraulic rotary actuator, provides the capability of rotating the clamping assembly ±180 degrees about its longitudinal axis. The pivot joint, operated by a 3-1/4-inch hydraulic cylinder, allows pivoting of the clamping-rotating assembly 90 degrees from its fully extended position.

The support arm, approximately 45 inches long and 6 inches square in cross section, is attached to the tool rotation assembly with an additional pivot joint. The pivot joint, operated by a 5-inch bore hydraulic cylinder, allows the support arm and clamping assembly to pivot downward 90 degrees from the horizontal position (tool extended).

The rotation assembly, located directly behind the rear pivot joint, permits rotation of the clamping assembly-support arm to 180 degrees about the horizontal axis. The assembly is operated by a hydraulic rotary actuator. The pivot and rotation joints provide complete tool maneuverability for pick-up and handling operations. The overall length of the tool is 11-1/2 feet and it weighs about 2000 lbs.

2.2.7.7 External Pipe Cutoff Tool. The external pipe cutoff tool is used in the waste storage tanks to cut off pipe and transport the sections to the material elevator. The remotely operated cutoff tool consists of a 20-inch-diameter abrasive cutoff wheel, mounted on the end of a telescoping, pivoting support arm and is capable of clamping and cutting through pipes ranging in size from 2 to 30 inches. The tool is also capable of carrying pipe segments weighing up to 350 lbs after cutoff. The major components of the cutoff tool consist of the cutoff wheel assembly, the telescoping support arm, a clamping assembly, a tool rotation assembly, and the adapter assembly (Figure 2-14).

The cutoff wheel assembly consists of a 20-inch-diameter abrasive cutoff wheel and its drive system, mounted in a housing. The cutoff wheel is driven at 2300 rpm by a 20-hp hydraulic motor and timing belt arrangement. The cutoff wheel is attached to a drive sprocket and shaft by means of a special nut to facilitate remote replacement of the wheel in the mining room using the master-slave manipulators and an impact wrench. The drive housing is attached to the outer end of the inner telescoping support arm tube.

The telescoping support arm assembly consists of a 4-3/4-inch square inner tube and a 6-inch square outer tube. The inner tube is supported within the outer tube by means of flat rectangular bearing assemblies. The telescoping support arm is operated by a 2-inch bore hydraulic cylinder and is capable of extending 28 inches from a fully retracted length of 78 inches (length from centerline of cutoff wheel to rear pivot joint of support arm). The hydraulic cylinder is also capable of producing a 2000-lb force at the cutoff wheel to aid in cutting operations.

The proximal end of the support arm, attached to the tool rotation assembly by a pivot joint and operated by a 3-1/4-inch hydraulic cylinder, allows the cutoff wheel assembly and telescoping support arm to pivot downward 45 degrees from the tool horizontal centerline. This motion produces the horizontal and vertical cuts in large pipes.

Directly behind the pivot joint, the rotation assembly rotates the entire cutoff wheel-telescoping support arm assembly ±90 degrees about the tool centerline. The rotation assembly is operated by a hydraulic rotary actuator and allows orientation of the cutoff wheel for horizontal or vertical cuts.

Attached to the housing for the tool rotation assembly is the clamping assembly, consisting of two pivoting, telescoping, clamping arms for clamping pipe being cut for stability, or to carry pipe segments within the tank. Each telescoping arm consists of a 4-inch square tube within a 5-1/2-inch square tube. Rectangular bearings provide sliding support between the tubes, similar to the telescoping support arm. The distal end of each inner tube is equipped with a pivoting clamp pad. Serrations on the pads and the pivoting capability allow the pads to adjust and firmly grip the various size pipes being cut. Each clamp arm can be extended 28 inches beyond the retracted length of 58-1/2 inches (measuring from the center of the clamp pads to the centerline of the clamp arms rear pivot joints); each is operated by a 2-inch hydraulic cylinder.

The proximal end of each clamp arm is attached by a pivot joint to a support structure, which in turn, is attached to the tool rotating assembly housing. The pivot joints permit pivoting of each clamping arm by 15 degrees to a fully open position (30 degrees between arm centerlines). The arms are pivoted by a 3-1/4-inch hydraulic cylinder and linkage arrangement which can exert 1000 lbs at each clamp pad (force perpendicular to pipe surface). The retracted length of the tool is 11 ft and the weight is 2280 lbs.

2.2.7.8 Tool Controls. All tools described are operated in the manual mode remotely from the control trailer using closed circuit television. The hydraulic actuators of each tool are operated by solenoid and flow control valves mounted as closely as practical to each actuator on the tool. These valves receive their signal from a panel of three 2-axis joysticks. Three are required to accommodate all of the degrees of freedom of each tool. The axes are chosen so that forward and backward motions of the joystick correspond to forward and backward pitch motions or left-right rotations of the tool body or tool arm. On some of the tool motion, rate control is used: the speed of the motion is proportional to the joystick displacement from center. Continuous motion of a tool part, like a cutting wheel, is initiated by depressing a pushbutton on the panel. The motion is stopped by pressing another pushbutton.

When a particular tool is used, the corresponding legend plate with appropriate motion identification is placed over the joysticks. The not-used functions of the joysticks are locked out electrically by the tool selector switch and can be locked out mechanically by turning the thumb wheels adjacent to the switches.

2.2.7.9 Tool Change Machine. The tool change machine is used in the mining room of the retriever to remove and install the mining tools on the working end of the articulated arm and to place the tools on the wash cart in the tool wash station. Included with the change machine are seven storage racks for the mining tools. The change machine pivots 195 degrees on a bearing and circular track arrangement and is equipped with a carriage assembly capable of 56 inches of horizontal and 48 inches of vertical travel. A clevis arrangement on the end of the carriage boom interfaces with the tool adapter and is capable of supporting a maximum load of 3000 lbs. The basic components of the change machine are the carriage assembly, the main frame, and pivot mechanism (Figure 2-15).

The main frame of the tool change machine is an open truss structure constructed primarily of 4-inch square tubing. The structure is approximately 24 inches wide, 76 inches long, and 11 feet in height, mounted on the pivot mechanism. The carriage assembly is mounted in the upper portion of the structure and is raised or lowered by a 2-1/2-inch hydraulic cylinder mounted on the main frame.

The carriage of the carriage assembly is an open truss structure constructed primarily of 3-inch square tubing and is 21 inches wide, 34 inches long, and 60 inches high. It is equipped with two sets of eight V-grooved rollers. One set mates with vertical tracks on the main frame and the other mates with horizontal tracks on the carriage boom. The boom, fabricated from an 8-inch square by 8-foot long tube, is extended or retracted by a 2-inch hydraulic cylinder mounted on the carriage. The clevis arrangement at the working end of the boom consists of two slotted plates designed to surround the mining tool adapter assembly and engage its lugs and a system to tighten/untighten the clamp assembly of the articulated arm. The clevis and slot design prevents the tool from rotating about its vertical axis or swinging about the lugs when picked up by the change machine.

The clamp assembly, which is part of the articulated arm, is operated by a captive acme thread screw, equipped with a tapered hex head. The clevis is equipped with a pneumatic nut runner mounted on a pneumatically operated dovetail slide. When the mining tool is fully secured in the boom clevis and the tool is fully mated with the articulated arm, the nut runner is moved by means of the dovetail slide until the socket on the nut runner engages the hex head of the clamp screw. The nut runner then opens or closes the clamp as required.

The pivot mechanism contains a 40-inch diameter bearing with internal gear teeth. The top of the bearing is covered with a flat plate to which the main frame is bolted. The centerline of rotation of the bearing is also the pivot axis of the tool change machine. The bearing is rotated by an internal pinion which is driven by a 1/3-hp electric

motor and reducer located on the outside surface of the waste retriever. The drive motor-reducer is connected to the pinion by a series of drive shafts and couplings. The forward end of the main frame is supported by two 8-inch diameter, double-flanged crane wheels which roll on a 30-lb circular rail attached to the floor of the mining room.

The tool storage racks are mounted in a circular pattern within reach of the extended boom of the tool change machine. Each tool storage rack is an open truss constructed of 3-inch square tubing. The storage rack is basically 27 inches wide by 49 inches long by 11 feet, 7 inches high. It is bolted to the floor and/or wall of the mining room. The top of the rack is equipped with slotted plates which position and support the mining tool in the same manner as the tool change machine's clevis. These plates are spaced to provide clearance for the tool change machine clevis as the tools are removed and installed.

The hydraulic and pneumatic control components (solenoid valves, flow control valves, etc.) are located on the outside wall of the retriever with the drive system. Rotary encoders, operated by rack-and-pinion arrangements, are provided on the change machine to monitor travel of the carriage and boom. An encoder is also provided with the drive system to monitor rotation. Flex hoses and electrical cables, equipped with quick disconnects, connect the systems on the machine with the control components outside of the mining room.

The tool change machine is remotely operated from the control trailer by means of a combination of automatic pre-programmed sequential pushbuttons and manual levers and knobs with the aid of closed circuit television. Control from the personnel corridor is also possible for special maintenance and emergency operations.

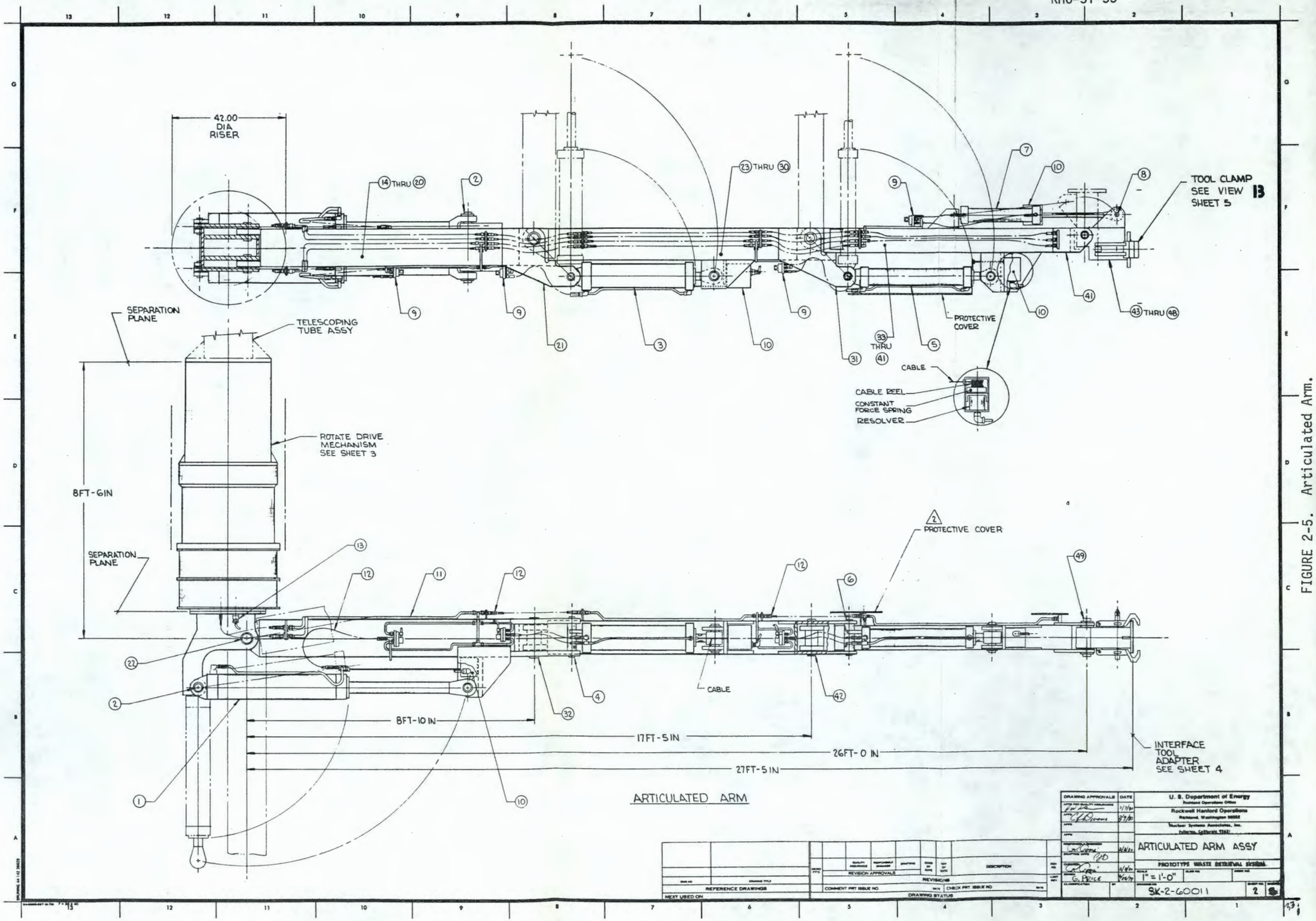

FIGURE 2-5. Articulated Arm.

QTY		P/N	DESCRIPTION		MATL / REF
	X	1	CLAMP WELDMENT		
1		2	BASE	0.50 THK	ASTM-A-240 SS
2		3	SIDE PLATE	1.50 THK	↕
1		4	CLAMP HEAD	MACHINED	↕
	1	5	PIN	0.75 DIA	↕
	1	6	SCREW, ACME	1.25 DIA	↕
	2	7	RETAINER, CYLIND	3.00 DIA	↕
	1	8	PLATE	1.00 DIA	ASTM-A-240 SS
		9			
		10			
		11			
		12			

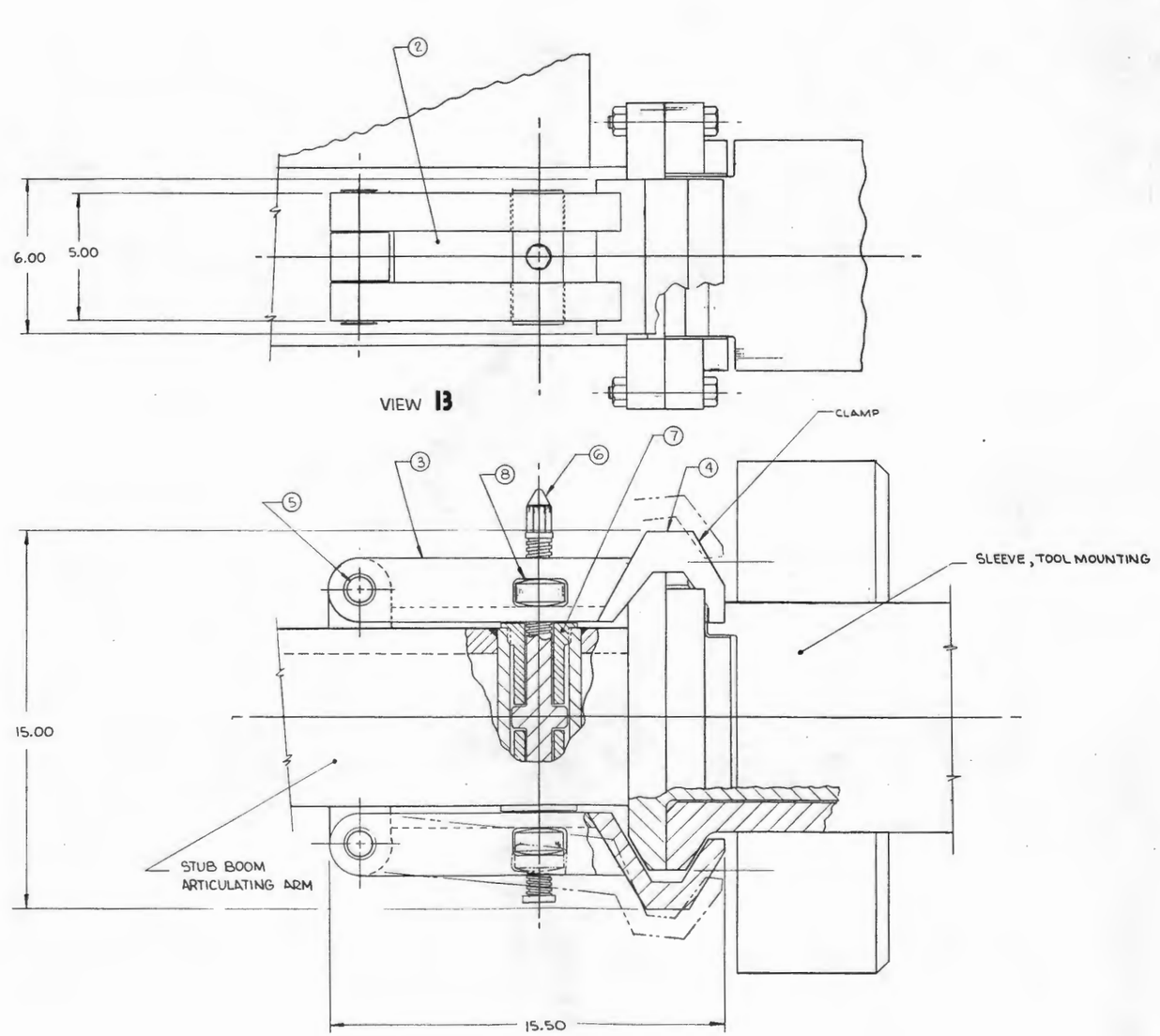

DRAWING APPROVALS	DATE	U. S. Department of Energy Richland Operations Office
APPD FOR QUALITY ASSURANCE	2/4/80	Rockwell Hanford Operations Richland, Washington 99352
APPD	2/7/80	Nuclear Systems Associates, Inc. Fullerton, California 92631
APPD		
DESIGN ENGINEER	2/4/80	TOOL ADAPTER CLAMP ARTICULATING ARM
DRAFTING APPD		
CHECKED	2/4/80	PROTOTYPE WASTE RETRIEVAL SYSTEM
ORIGINATOR G. PRICE	2/4/80	SCALE 1/2 — SHEET 5 OF 5
CLASSIFICATION	BY	DRAWING NO SK-2-60011

DWG NO	DRAWING TITLE
REFERENCE DRAWINGS	
NEXT USED ON	

REVISION APPROVALS								REVISIONS	
REV PTO		QUALITY ASSURANCE	RESPONSIBLE ENGINEER	DRAFTING	CHKD BY ENG	REV BY ENG		DESCRIPTION	REV NO
									LAST NO
COMMENT PRT ISSUE NO	DATE	CHECK PRT ISSUE NO	DATE	DRAWING STATUS					

FIGURE 2-6. Tool Clamp Mechanism.

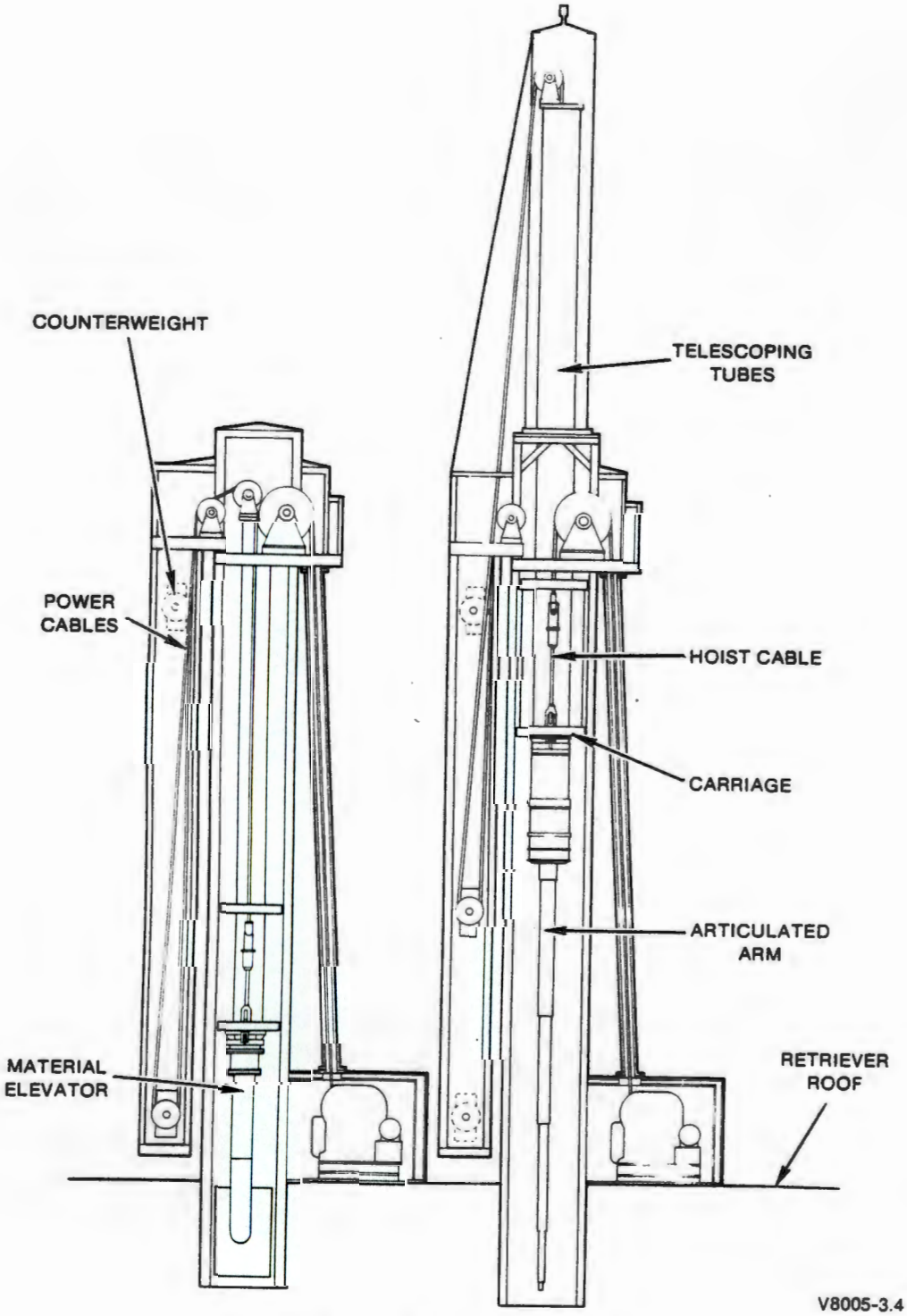

FIGURE 2-7. Retriever Tower.

QTY			ITEM NO	DESCRIPTION		MTL / REF
		1	1	MOUNTING STUB (ARTICULATING ARM)	12" DIA x 18¾" LG	ASTM-A-240 SS
	X	1	2	SLEEVE (TOOL ATTACHMENT)	10" DIA x 17" LG	
	1		3	BRACKET, ELECTRICAL CONN	¼" PL	
	2		4	BRACKET, HYDRAULIC CONN	¼" PL	
	2		5	GUIDE, FIXTURE	1" x 6" x 5½"	
	1		6	HOUSING, LOCKING PIN	2½ DIA x 4", ½ WALL	ASTM-A-240 SS
			7			
			8			
		1	9	KEY	½" x 1" x 15"	ASTM-A-240 SS
		2	10	ALIGNMENT PIN	⅛" DIA	ASTM-A-240 SS
		1	11	ELECTRICAL CONNECTOR	VIKING PN C600151-	
		1	12	HOUSING, ELECT CONN		ASTM-A-240 SS
		4	13	HYDRAULIC CONN (PAIR)	ZERO-AIRE SEATON WILSON	
			14			
			15			

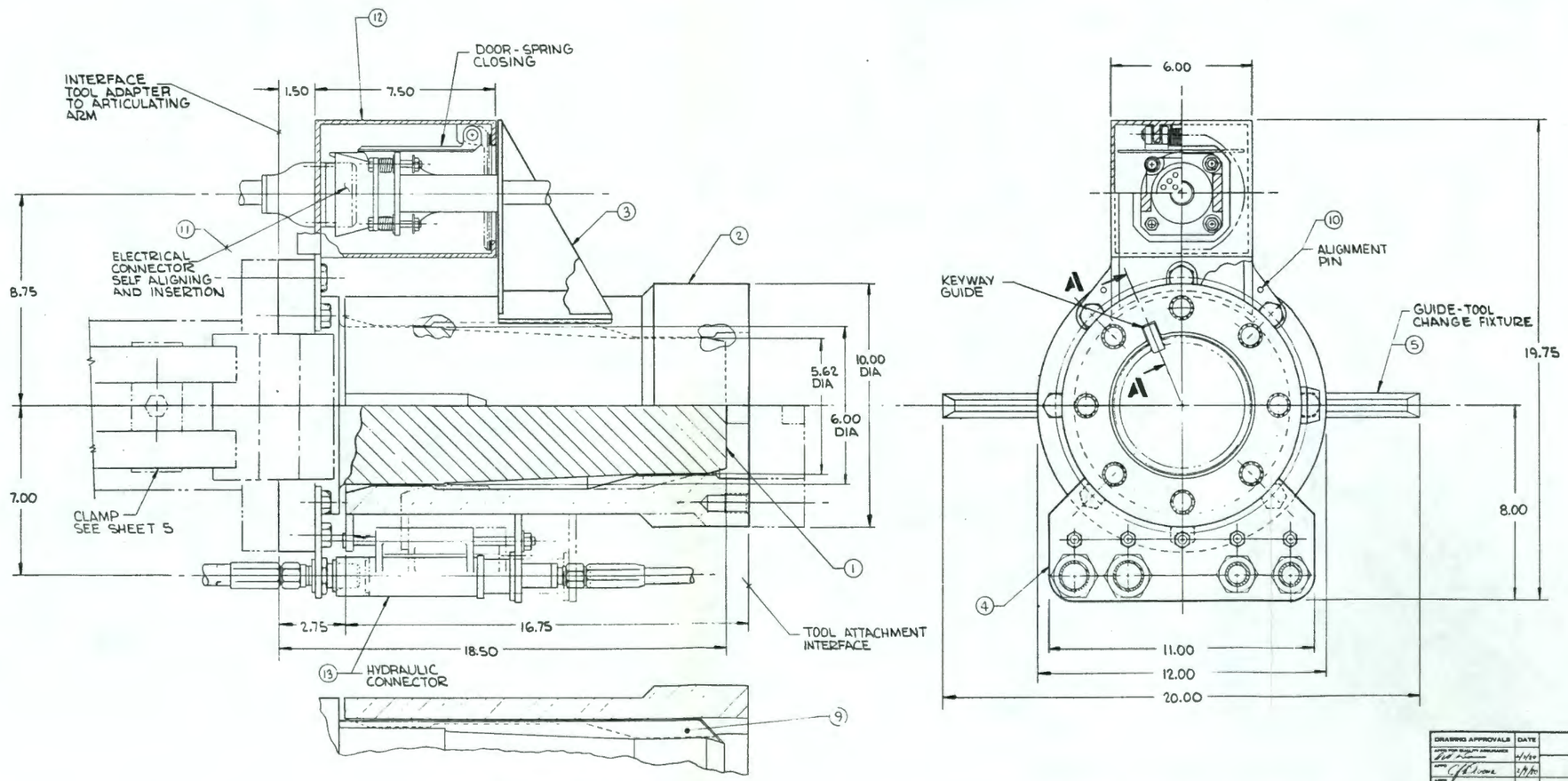

FIGURE 2-8. Mining Tool Adapter.

DRAWING APPROVALS	DATE
APPD FOR QUALITY ASSURANCE	4/1/84
APPD	1/9/84
APPD	
APPD	
RESPONSIBLE ENGINEER	2/6/84
DRAFTING APPD	
CHECKED	2/8/84
DRAWN G. PRICE	2/7/84
CLASSIFICATION	BY

U. S. Department of Energy
Richland Operations Office
Rockwell Hanford Operations
Richland, Washington 99352
Nuclear Systems Associates, Inc.
Fullerton, California 92631

TOOL ADAPTER ARTICULATING ARM

PROTOTYPE WASTE RETRIEVAL SYSTEM

SCALE 1/2 | DRAWING NO SK-2-60011 | SHEET NO 4 | SHEETS 5

REFERENCE DRAWINGS | NEXT USED ON

REVISION APPROVALS | REVISIONS | DRAWING STATUS

COMMENT PRT ISSUE NO | CHECK PRT ISSUE NO

NOTES: UNLESS OTHERWISE SPECIFIED
1. APPLY WELD BEAD FOR ABRASION RESISTANCE - BOTH VALVES
2. ITEMS 16, 17 & 22 MOUNTED IN-LINE AND NOT SHOWN ON DRAWING
3. DESIGN AND FABRICATION TO BE IN ACCORDANCE WITH SPECIFICATION N79-028-509
4. DO NOT FABRICATE FROM THIS DRAWING

QTY	PT NO	DESCRIPTION	MATL/REF
4	17	VALVE, FLOW CONTROL	
AR	18	HYDRAULIC FLEX HOSE 3/8" I.D.	
AR	19	HYDRAULIC TUBING 3/8" I.D.	
AR	20	HYDRAULIC FITTINGS	
3	21	SUB PLATE	
1	22	VALVE, PRESSURE REDUCING	
	23		
AR	24	CONDUIT	
	25		
	26		
	27		
	28		
	29		
	30		
	31		
	32		

QTY	PT NO	DESCRIPTION	MATL/REF
1	1	BUCKET ASSY	ASTM-A240 T304 S.S.
2	2	BRACKET & STRUCTURE	↑ ↑ ↑
1	3	PIVOT ASSY	
1	4	ARM ASSY 6x6 x 3/8 SQ. TUBE	↑ ↑ ↑
7	5	BRACKETS	ASTM-A240 S.S.
10	6	PINS	NITIRONIC 60 OR EQUIV S.S.
1	7	TOOL ADAPTER MOUNTING PLATE	ASTM-A240 S.S.
2	8	GUARD 3/4" O.D. x .18 WALL S.S. TUBE	
	9		
2	10	CYLINDER 2 1/2" DIA x 7" STROKE	
1	11	CYLINDER 4" DIA x 16" STROKE	
1	12	ROTARY ACTUATOR RN-34-IV	EX-CELL-O CORP GREENVILLE, OHIO
3	13	SOLENOID CONTROL VALVE 21104-7301-0202	TELEDYNE REPUBLIC CLEVELAND, OHIO
2	14	BEARING 7310-PD	MARLIN-ROCKWELL JAMESTOWN, N.Y.
1	15	NUT NS-17	
2	16	VALVE, RELIEF	

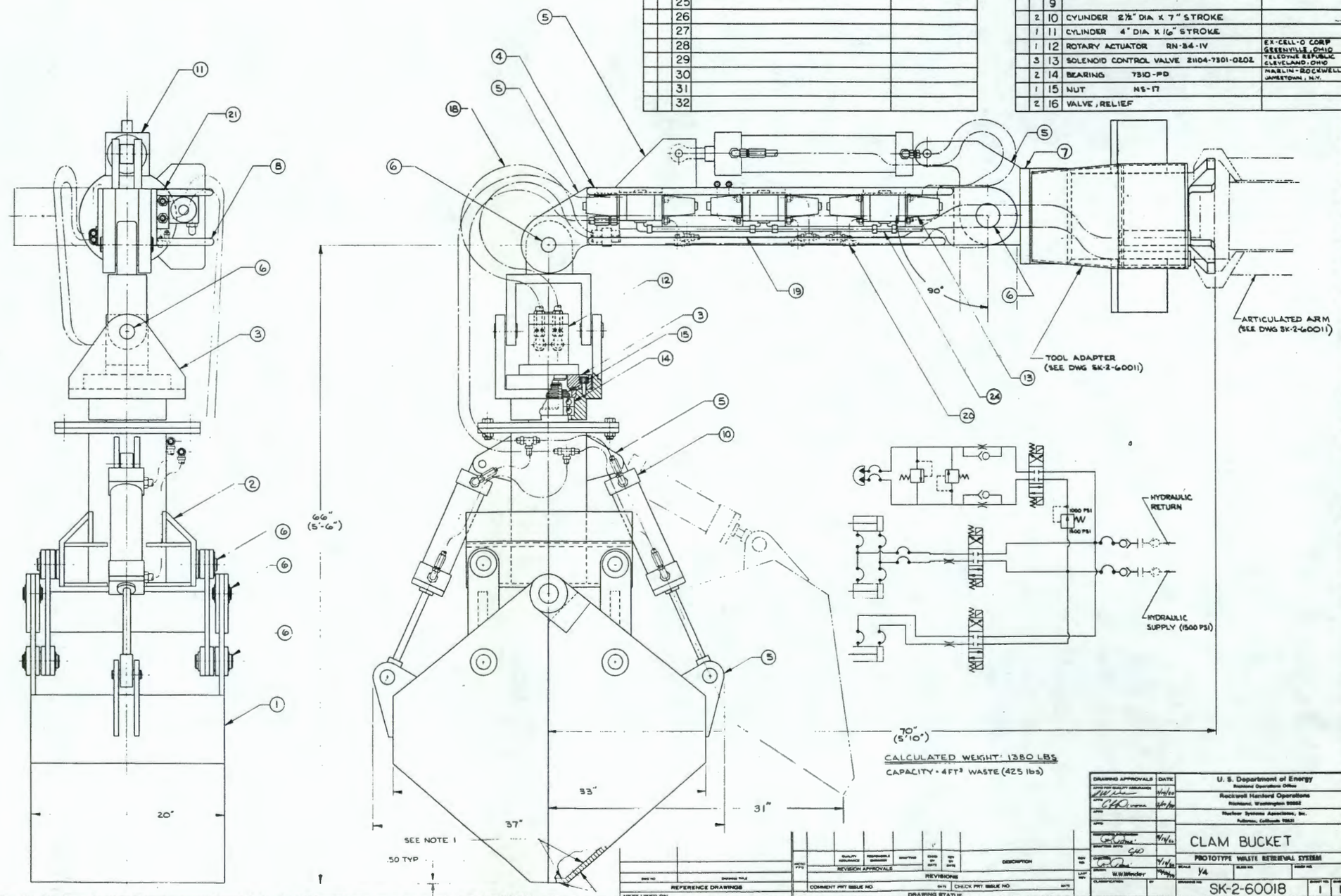

DRAWING APPROVALS	DATE
APPD FOR QUALITY ASSURANCE	4/14/82
APPD	4/14/82
APPD	
DRAWING APPROVAL	4/14/82
DRAWN W.W. Wendler	7/14/82

U. S. Department of Energy
Richland Operations Office
Rockwell Hanford Operations
Richland, Washington 99352
Nuclear Systems Associates, Inc.
Fullerton, California 92631

CLAM BUCKET
PROTOTYPE WASTE RETRIEVAL SYSTEM
SCALE 1/4
SK-2-60018
SHEET NO. 1 SHEETS 1

REFERENCE DRAWINGS
NEXT USED ON
REVISION APPROVALS
REVISIONS
COMMENT PRT ISSUE NO
CHECK PRT ISSUE NO
DRAWING STATUS

FIGURE 2-9. Clam Bucket Tool.

NOTES: UNLESS OTHERWISE SPECIFIED
1. ITEMS 17 & 18 MOUNTED IN-LINE AND NOT SHOWN ON DWG
2. APPLY WELD BEAD TO AREAS INDICATED FOR ABRASION RESISTANCE
3. DESIGN AND FABRICATION TO BE IN ACCORDANCE WITH SPECIFICATION N79-028-509
4. DO NOT FABRICATE FROM THIS DRAWING

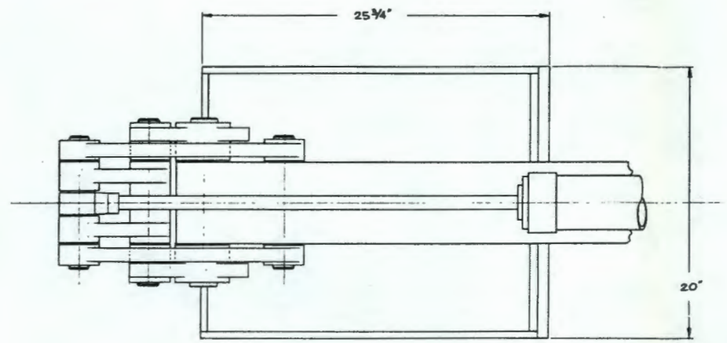

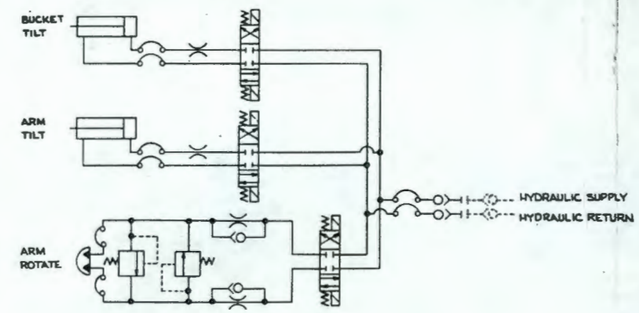

QTY	PT NO	DESCRIPTION	MATL/REF
1	1	BACKHOE ASSY	ASTM-A240 SS
1	2	ARM ASSY	ASTM-A240 SS
AR	3	BRACKETS	ASTM-A240 SS
AR	4	PINS	NITRONIC 60 OR EQUIV.
1	5	ARM ROTATE ASSY	ASTM-A240 SS
1	6	TOOL ADAPTER MOUNTING PLATE	ASTM-A240 SS
4	7	GUARD 5/4" O.D X .18 WALL TUBE	
4	8	LEVER	ASTM-A240 SS
	9		
1	10	HYDRAULIC CYLINDER 5 1/4" DIA X 32" STROKE	
1	11	HYDRAULIC CYLINDER 5" DIA X 7" STROKE	
1	12	HYDRAULIC ROTARY ACTUATOR HS-15-280	BIRD-JOHNSON WALPOLE, MASS
3	13	SOLENOID CONTROL VALVE D1BWCV (3 WAY 2 POS)	PARKER CLEVELAND, OHIO
3	14	SUB PLATE SPD12C1	PARKER CLEVELAND, OHIO
1	15	BEARING MTD 210	RAYDON MUSKEGON, MICH
	16		
4	17	VALVE, FLOW CONTROL	
2	18	VALVE, RELIEF	
AR	19	HYDRAULIC FLEX HOSE 3/8" I.D.	
AR	20	HYDRAULIC TUBING 3/8" I.D.	
AR	21	HYDRAULIC FITTINGS	
AR	22	ELECTRICAL WIRING (FOR SOLENOID VALVES)	
	23		
	24		
	25		

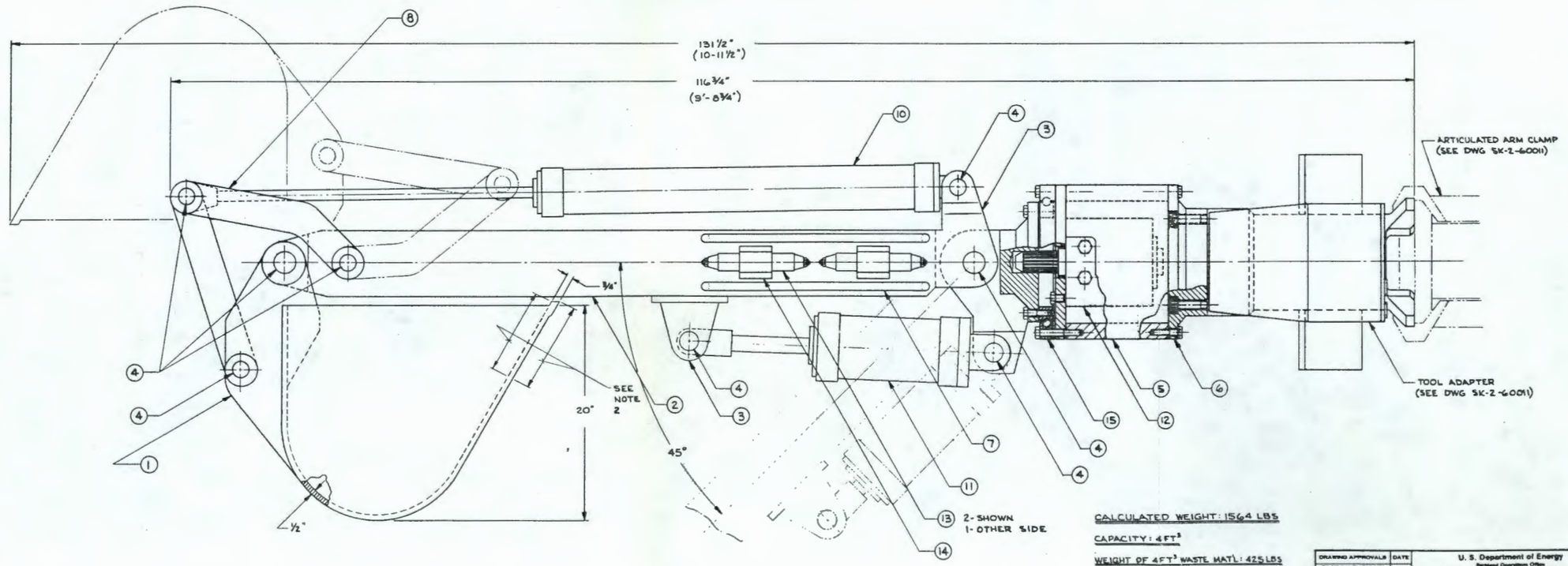

CALCULATED WEIGHT: 1564 LBS

CAPACITY: 4 FT³

WEIGHT OF 4 FT³ WASTE MATL: 425 LBS

DRAWING APPROVALS	DATE
APPD FOR QUALITY ASSURANCE	7/9/80
APPD	7/10/80
APPD	
APPD	
REPRODUCTION AUTH.	4/11/80
CHECKED	4/8/80
DRAWN W.R.Winder	7/9/79

U. S. Department of Energy
Richland Operations Office
Rockwell Hanford Operations
Richland, Washington 99352
Nuclear Systems Association, Inc.
Anaheim, California 92621

BACKHOE TOOL

PROTOTYPE WASTE RETRIEVAL SYSTEM

SCALE 1/4 | SIZE | CODE NO. | DRAWING NO. SK-2-60021 | SHEET NO. 1 | SHEETS 1

REFERENCE DRAWINGS

NEXT USED ON

REVISION APPROVALS | REVISIONS | DRAWING STATUS

FIGURE 2-10. Backhoe Tool.

NOTES: UNLESS OTHERWISE SPECIFIED
1. ITEMS 17 & 18 MOUNTED IN LINE AND NOT SHOWN ON DWG
2. DESIGN AND FABRICATION TO BE IN ACCORDANCE WITH SPECIFICATION N79-028-509
3. DO NOT FAB FROM THIS DRAWING

QTY	PT NO	DESCRIPTION	MATL/REF	
1	1	ARM ASSY	ASTM-A240	S.S.
2	2	BRACKET	ASTM-A240	S.S.
8	3	PIN	NITRONIC 60 OR EQUIV.	
1	4	ARM ROTATE ASSY	ASTM-A240	S.S.
1	5	TOOL ADAPTER MOUNTING PLATE	ASTM-A240	S.S.
4	6	GUARD 3/8" O.D. X .18 WALL TUBE		
4	7	LINK	ASTM-A240	S.S.
1	8	IMPACT HAMMER (HYDRAULIC BACKHOE IMPACTOR)	HUGHES TOOL CO. HOUSTON, TEXAS	
1	9	HYDRAULIC CYLINDER 3 1/4" DIA X 18" STROKE		
1	10	HYDRAULIC CYLINDER 5" DIA X 7" STROKE		
1	11	HYDRAULIC ROTARY ACTUATOR (HS-15-280)	BIED-JOHNSON WALPOLE, MASS.	
3	12	SOLENOID CONTROL VALVE D1BW1CV (4 WAY, 3 POS)	PARKER CLEVELAND, OHIO	
1	13	SOLENOID CONTROL VALVE D5W1MV (4 WAY, 2 POS)	PARKER CLEVELAND, OHIO	
3	14	SUB PLATE SPD1EC-1	PARKER CLEVELAND, OHIO	
1	15	SUB PLATE SPD31-GSA	PARKER CLEVELAND, OHIO	
1	16	BEARING MTO 210	HAYDON MUSKEGON, MICH.	
4	17	VALVE, FLOW CONTROL		
2	18	VALVE, RELIEF		
AR	19	HYDRAULIC FLEX HOSE 3/8" I.D.		
AR	20	HYDRAULIC FLEX HOSE 3/4" I.D.		
AR	21	HYDRAULIC TUBING 3/8" I.D.		
AR	22	HYDRAULIC TUBING 3/4" I.D.		
AR	23	HYDRAULIC FITTINGS		
AR	24	ELECTRICAL WIRING (FOR SOLENOID VALVES)		
1	25	STRAIGHT MOIL TOOL		
1	26	SPADE TOOL		

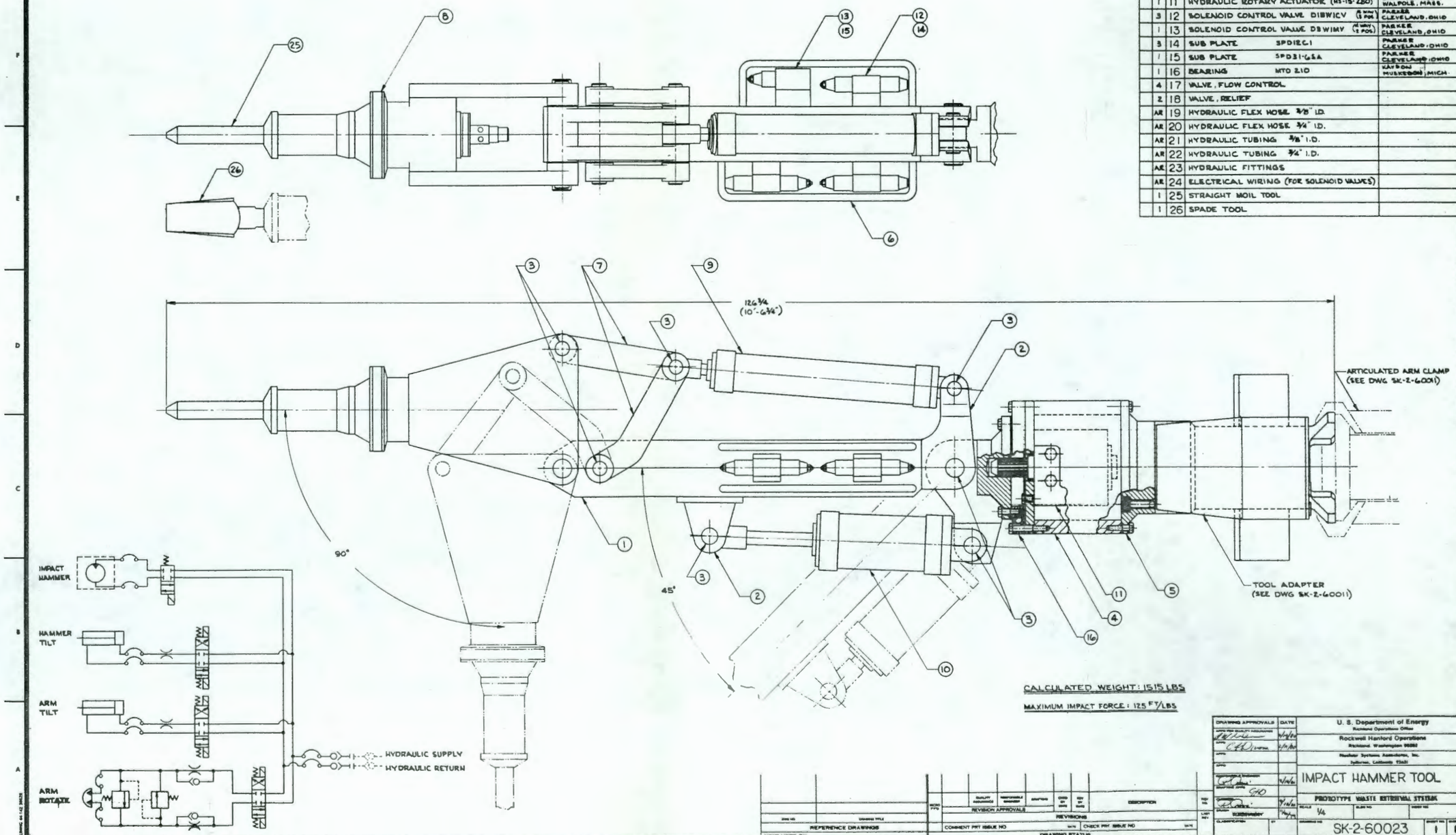

FIGURE 2-11. Impact Hammer Tool.

NOTES: UNLESS OTHERWISE SPECIFIED

1. ITEMS 14 & 15 MOUNTED IN LINE AND NOT SHOWN ON DRAWING
2. DESIGN AND FABRICATION TO BE IN ACCORDANCE WITH SPECIFICATION N79-028-309
3. DO NOT FABRICATE FROM THIS DRAWING

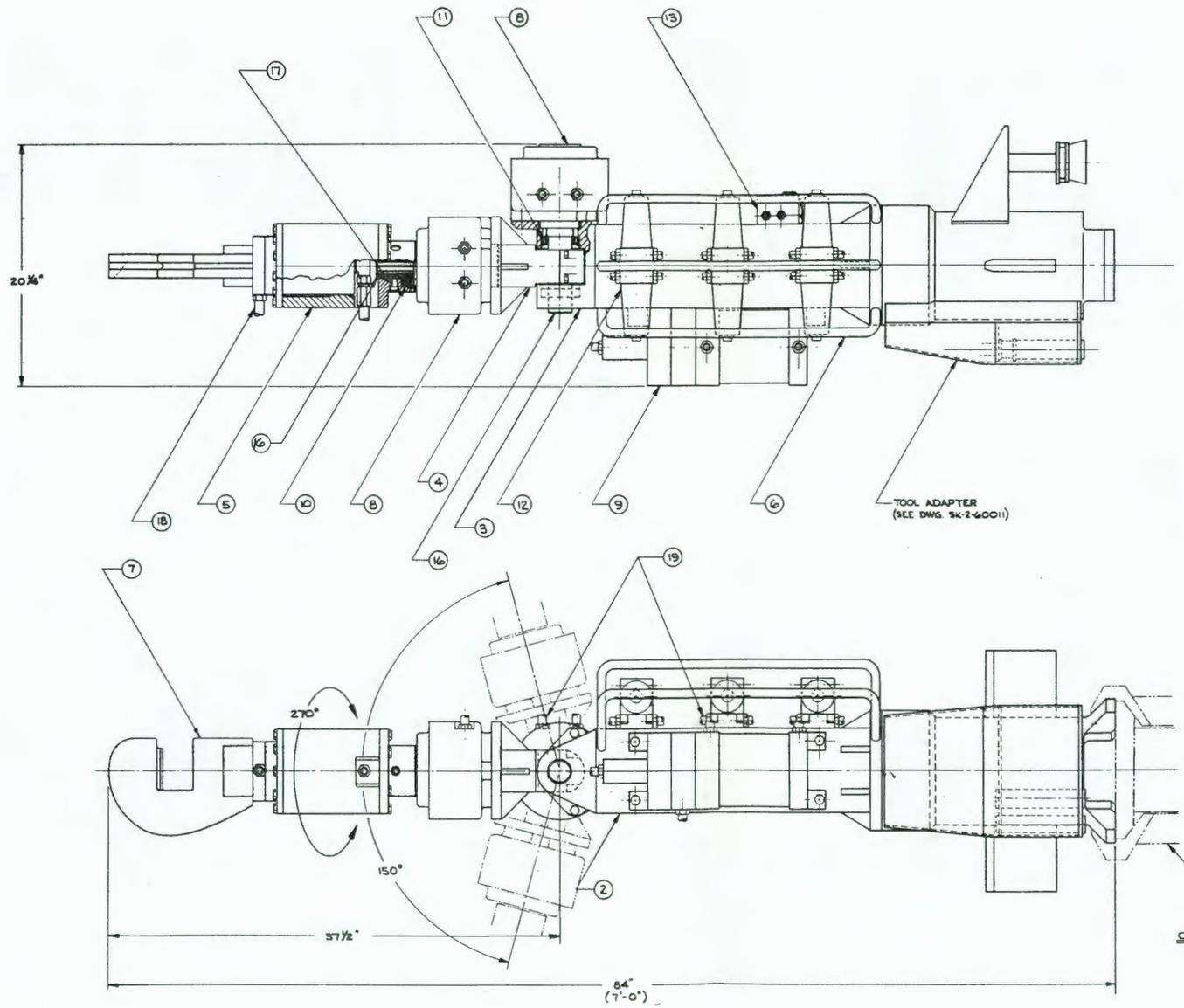

QTY	ITEM NO	DESCRIPTION	MATL/REF
	1		
1	2	ARM (MAKE FROM ¾" S.S. PLATE)	
1	3	CLEVIS	S.S. PLATE
1	4	ACTUATOR ADAPTER	S.S. PLATE
1	5	CUTTER HOUSING	S.S. PIPE
3	6	GUARD (¾" O.D X .18 WALL S.S. TUBE)	
1	7	CUTTER HISSOO (MODIFIED)	H.K. PORTER, INC. SOMERVILLE, MASS
2	8	ROTARY ACTUATOR HS-6-280	BIRD-JOHNSON NAUPOLE, MASS
1	9	B4 BOOSTER MODEL J, 6" BORE	MILLER FLUID POWER SCHAUMBURG, ILL.
1	10	THRUST BEARING NTHA-3258	TORRINGTON SOUTH BEND, IND.
2	11	TAPERED ROLLER BEARING CONE LM29749 CUP LM29710	HOOVER-NSK ANN ARBOR, MICH
3	12	VALVE, SOLENOID 4-WAY, 3-POSITION	
1	13	VALVE, SEQUENCE	
4	14	VALVE, RELIEF	
5	15	VALVE, FLOW CONTROL	
2	16	SHAFT 2" DIA	NITRONIC 60 OR EQUIV
3	17	SET SCREW	
AR	18	HYDRAULIC FLEX HOSE ⅜" I.D.	
AR	19	HYDRAULIC TUBING ⅜" I.D.	
AR	20	HYDRAULIC FITTINGS	
	21		
	22		
	23		
	24		
	25		

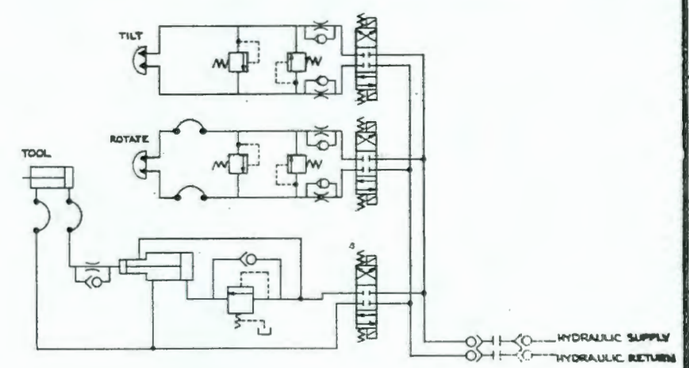

CALCULATED WEIGHT: 853 LBS

U. S. Department of Energy
Richland Operations Office
Rockwell Hanford Operations
Richland, Washington 99352
Nuclear Systems Associates, Inc.
Jefferson, Indiana 47130

ROD AND CABLE CUTTING TOOL
PROTOTYPE WASTE RETRIEVAL TOOLING

SCALE 1/4
SK-2-60019
SHEET NO. 1 OF 1

REFERENCE DRAWINGS
NEXT USED ON
REVISION APPROVALS
REVISIONS
DESCRIPTION
COMMENT PRT ISSUE NO.
CHECK PRT ISSUE NO.
DRAWING STATUS

FIGURE 2-12. Rod and Cable Cutting Tool.

NOTES: UNLESS OTHERWISE SPECIFIED

1. ITEMS 23 & 24 MOUNTED IN-LINE AND NOT SHOWN ON DWG.
2. DESIGN AND FABRICATION TO BE IN ACCORDANCE WITH SPECIFICATION N79-028-509
3. DO NOT FABRICATE FROM THIS DRAWING

QTY	PT NO	DESCRIPTION	MATL/REF
7	23	VALVE, FLOW CONTROL	
4	24	VALVE, RELIEF	
AR	25	HYDRAULIC FLEX HOSE 3/8" I.D.	
AR	26	HYDRAULIC TUBING 3/8" I.D.	
AR	27	HYDRAULIC FITTINGS	
AR	28	ELECTRICAL WIRING (FOR SOLENOID VALVES)	
	29		
	30		

QTY	PT NO	DESCRIPTION	MATL/REF
1	1	CLAMP ASSY	ASTM-A240 S.S.
1	2	CLAMP ROTATE ASSY	ASTM-A240 S.S.
AR	3	BRACKETS	ASTM-A240 S.S.
1	4	ARM ASSY	ASTM-A240 S.S.
AR	5	PINS	NITRONIC 60 OR EQUIV
1	6	ARM ROTATE ASSY	ASTM-A240 S.S.
1	7	TOOL ADAPTER MOUNTING PLATE	ASTM-A240 S.S.
4	8	GUARD 3/4" O.D. X .18 WALL TUBE	
	9		
	10		
1	11	HYDRAULIC CYLINDER 5" DIA X 15" STROKE	
1	12	HYDRAULIC CYLINDER 3 1/4" DIA X 15" STROKE	
2	13	HYDRAULIC CYLINDER 2 1/2" DIA X 6" STROKE	
1	14	HYDRAULIC ROTARY ACTUATOR HS-10-280	BIRD-JOHNSON WALPOLE, MASS
1	15	HYDRAULIC ROTARY ACTUATOR SS-40-280	BIRD-JOHNSON WALPOLE, MASS.
5	16	SOLENOID CONTROL VALVE D1B1VCV (4 WAY, 3 POSITION)	PARKER CLEVELAND, OHIO
5	17	SUB PLATE SPD12C1	PARKER CLEVELAND, OHIO
2	18	TAPERED ROLLER BEARING CONE 6580 CUP 6535	HOOVER-NSK ANN ARBOR, MICH
1	19	BEARING MTO 265	RAYDON MUSKEGON, MICH.
1	20	NUT NS 18	
2	21	RETAINING RING	
1	22	SEAL 415683	NATIONAL OIL SEAL SOUTHFIELD, MICH

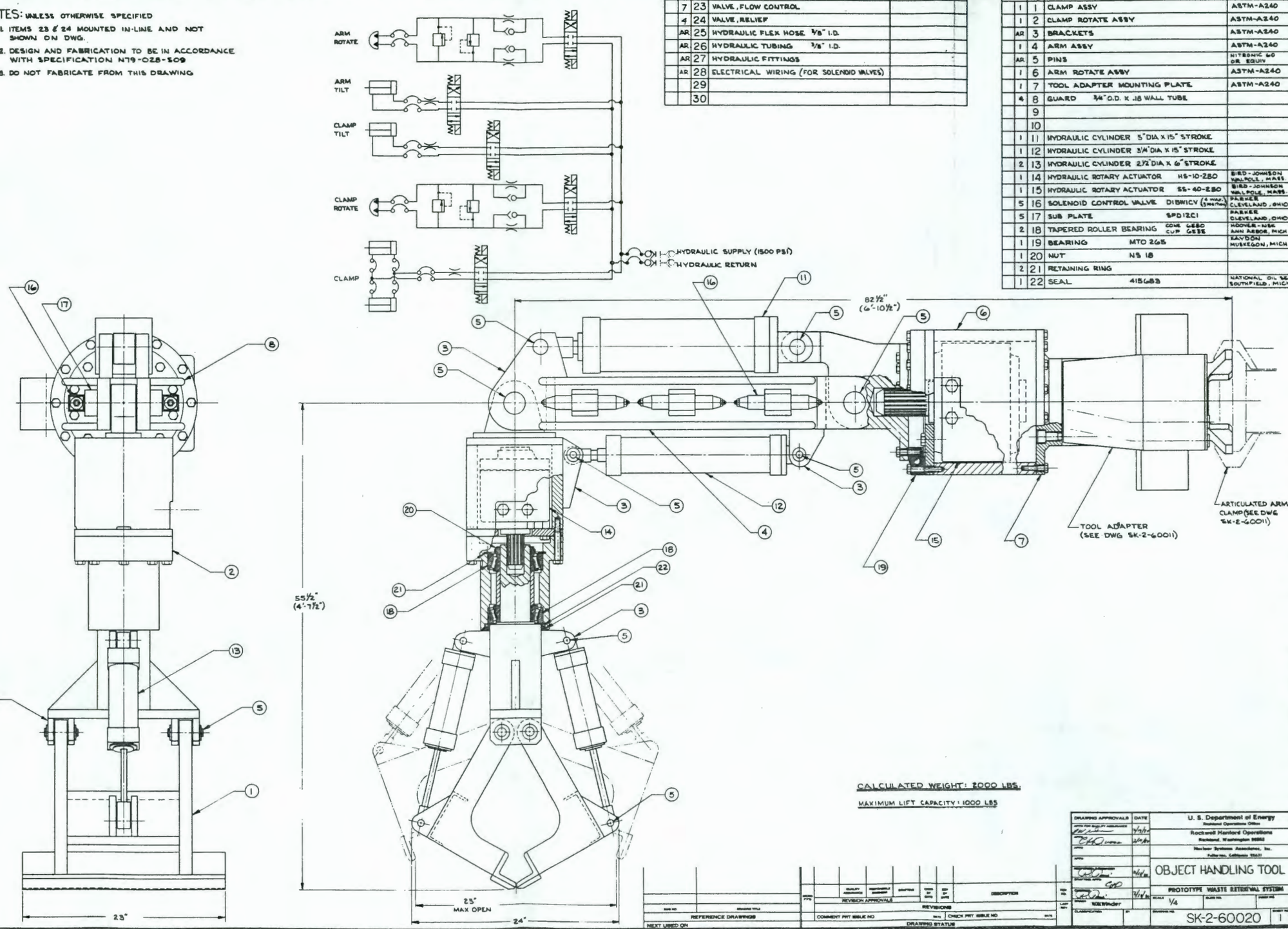

CALCULATED WEIGHT: 2000 LBS.

MAXIMUM LIFT CAPACITY: 1000 LBS

DRAWING APPROVALS	DATE	U. S. Department of Energy Richland Operations Office
		Rockwell Hanford Operations Richland, Washington 99352
		Nuclear Systems Associates, Inc. Fullerton, California 92631
		OBJECT HANDLING TOOL
		PROTOTYPE WASTE RETRIEVAL SYSTEM
		SCALE 1/4 — SK-2-60020 — SHEET NO. 1 — REVISION 1

FIGURE 2-13. Object Handling Tool.

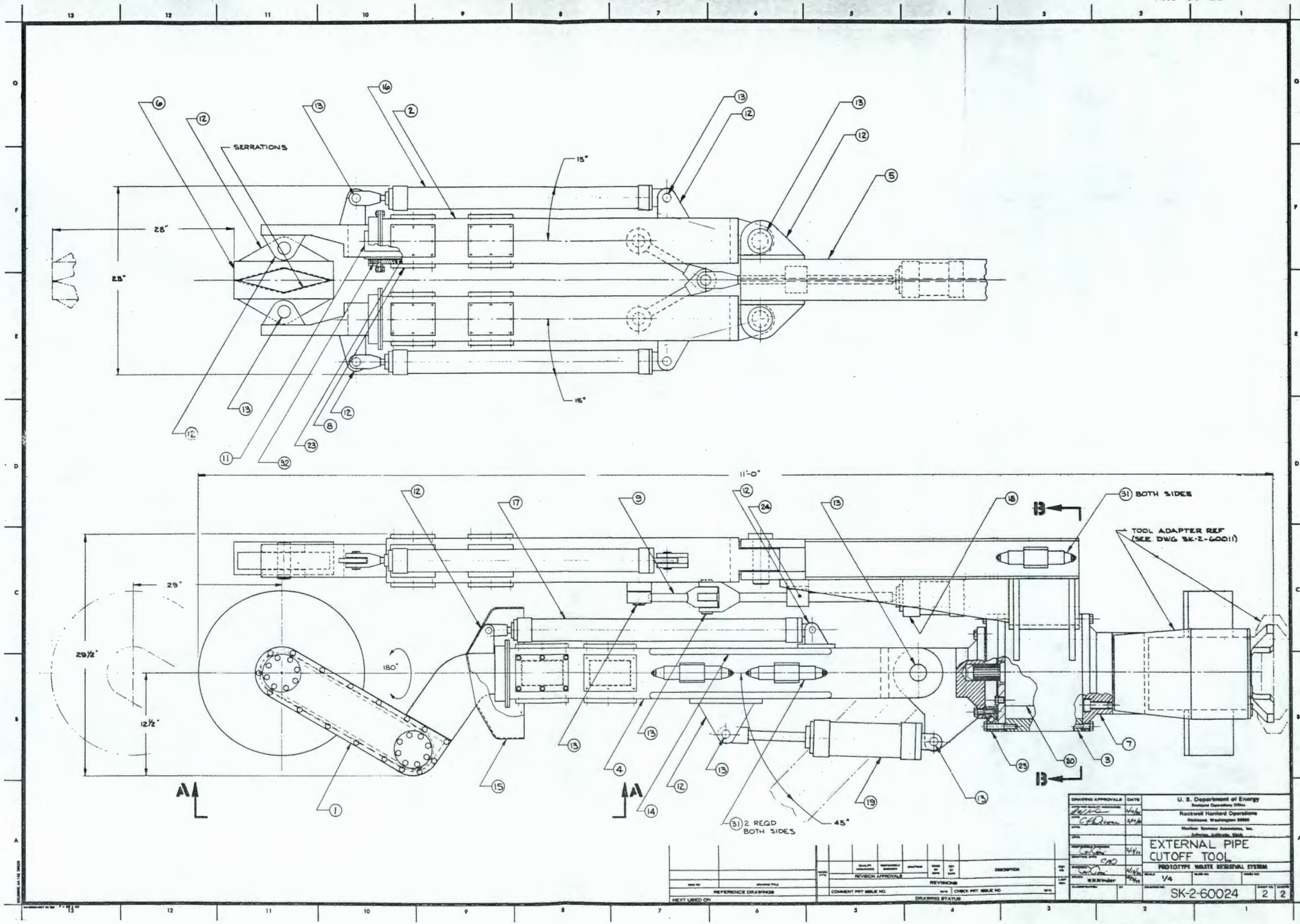

FIGURE 2-14. External Pipe Cutoff Tool.

NOTES: UNLESS OTHERWISE SPECIFIED

1. DESIGN AND FABRICATION TO BE IN ACCORDANCE WITH SPECIFICATION N79-028-505
2. DO NOT FABRICATE FROM THIS DRAWING

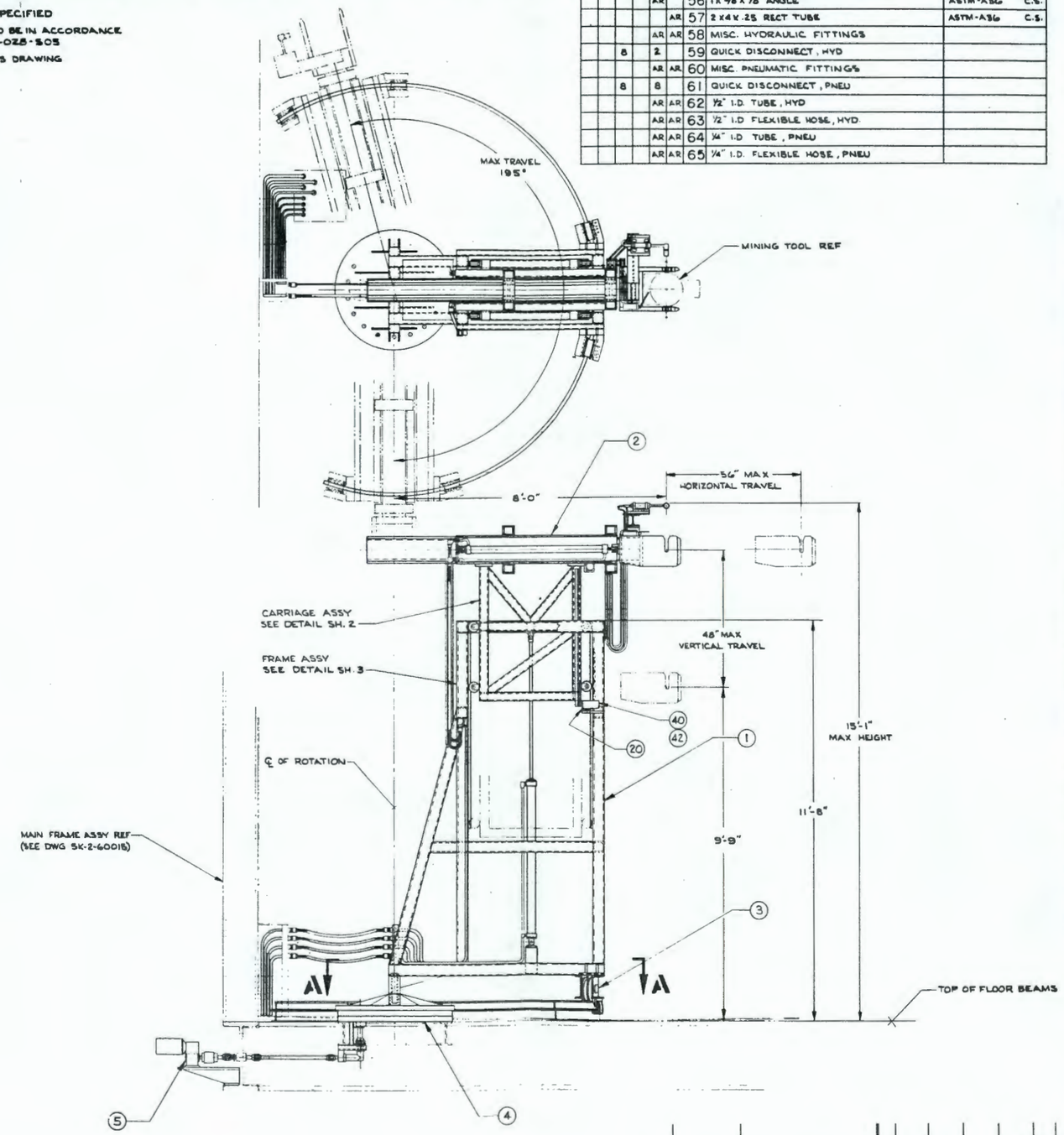

QTY						PT NO	DESCRIPTION	MATL REF
				AR		56	1 X 5/8 X 1/8 ANGLE	ASTM-A36 C.S.
					AR	57	2 X 4 X .25 RECT TUBE	ASTM-A36 C.S.
				AR	AR	58	MISC. HYDRAULIC FITTINGS	
			8	2		59	QUICK DISCONNECT, HYD	
				AR	AR	60	MISC. PNEUMATIC FITTINGS	
			8	8		61	QUICK DISCONNECT, PNEU	
				AR	AR	62	1/2" I.D. TUBE, HYD	
				AR	AR	63	1/2" I.D FLEXIBLE HOSE, HYD.	
				AR	AR	64	1/4" I.D TUBE, PNEU	
				AR	AR	65	1/4" I.D. FLEXIBLE HOSE, PNEU	

QTY						PT NO	DESCRIPTION	MATL/REF.
					X	1	FRAME ASSEMBLY	
				X		2	CARRIAGE ASSEMBLY	
				X		3	WHEEL ASSEMBLY	
			X			4	ROTATE ASSEMBLY	
		X				5	DRIVE ASSEMBLY	
	X					6	TRACK ASSEMBLY	
				AR		7	1.25 THK PLATE	ASTM-A240 S.S.
		AR		AR	AR	8	.38 THK PLATE	ASTM-A36 C.S.
			AR	AR	AR	9	.50 THK PLATE	↓ ↓
		AR	AR	AR	AR	10	.75 THK PLATE	
				AR	AR	11	1.00 THK PLATE	
				AR	AR	12	2 X 1 X 3/16 CHANNEL	
		AR			AR	13	4 X 4 X .25 SQ. TUBE	
				AR		14	3 X 3 X .25 SQ. TUBE	
					AR	15	6 X 4 X .25 RECT. TUBE	
			AR			16	C8 X 18.75	↓ ↓
				AR		17	C10 X 30	ASTM-A36 C.S.
				AR	AR	18	1 X 1 X 1/4 ANGLE	ASTM-A479 S.S.
				AR		19	1 1/2 X 1 1/2 X 1/4 ANGLE	ASTM-A36 C.S.
				AR		20	3 1/2 X 3 X 3/8 ANGLE	↓ ↓
				AR		21	S4 X 7.7 I-BEAM	
AR						22	W4 X 13	↓ ↓
	AR			AR	.	23	C4 X 6.25	ASTM-A36 C.S.
	1					24	MOTOR 1/3 H.P.	
	1					25	SPEED REDUCER 4MCTD	WINSMITH SPRINGVILLE, N.Y.
	1					26	TORQUE LIMITER MODEL TT4X	HELLAND MINNETONKA, MINN
	4					27	COUPLING FC25	BOSTON GEAR QUINCY, MASS.
	1					28	RIGHT ANGLE DRIVE R3330	PLESSEY DYNAMICS HILLSIDE, NEW JERSEY
	1					29	PILLOW BLOCK BEARING G4576-MB	BOSTON GEAR QUINCY, MASS.
	1					30	PINION P2.5-6.8D2	ROTEX AURORA, OHIO
		1				31	BEARING A10-36NZ	ROTEX AURORA, OHIO
			2			32	FLANGED WHEEL 3543	DOWNS CRANE & HOIST LOS ANGELES, CA.
AR						33	RAIL 30 lb.	
			4			34	FLANGED BEARING G4612-MBP	BOSTON GEAR QUINCY, MASS
					1	35	HYDRAULIC CYLINDER, 2 1/2" DIA, 48" STROKE	
				1		36	HYDRAULIC CYLINDER, 2" DIA, 56" STROKE	
				1		37	PNEUMATIC NUTRUNNER CP-5081-RUNNEN (MODIFIED)	CHICAGO PNEUMATIC UTICA, N.Y.
				1		38	PNEUMATIC DOVETAIL AIR SLIDE AS-4-60	ATLEAN INC. ANAHEIM, CA.
				8		39	V-TRACK WHEEL VLR^{2}3 1/2	OSBORN MFG. CORP. CLEVELAND, OHIO
	1			1	1	40	ENCODER NEMA 12	ASTROSYSTEMS, INC. LAKE SUCCESS, N.Y.
				2		41	RACK PITCH-24, FACE-.230, MDTH-480	
				1	1	42	PINION PITCH-24, FACE-3/8, NO. TEETH-60, P.D-2 1/2	
				AR		43	8 X 8 X .38 SQ. TUBE	ASTM-A36 C.S.
	2					44	VALVE, SOLENOID, 4 WAY-3 POS, HYD.	
	2					45	VALVE, SOLENOID, 3 WAY-2 POS, HYD.	
	2					46	VALVE, PRESSURE CONTROL, HYD	
	4					47	VALVE, FLOW CONTROL, HYD	
	2					48	VALVE, SOLENOID, 4 WAY-3 POS, PNEU.	
	2					49	VALVE, FLOW CONTROL, PNEU	
	1					50	PRESSURE REGULATOR, PNEU.	
	AR					51	DRIVE SHAFT 1" DIA	ASTM-A36 C.S.
	AR					52	DRIVE SHAFT 1 3/4" DIA	ASTM-A36 C.S.
	1					53	SPROCKET	
	2					54	SHAFT 2" DIA	NITRONIC 60 OR EQUIV
				1		55	LIMIT SWITCH TYPE ML	MICRO SWITCH FREEPORT, ILL.

CALCULATED WEIGHT: 8560 lbs

DRAWING APPROVALS	DATE
APPROVED BY SUBCONTRACTOR	1/1/80
APPR	1/19/80
APPR	
APPR	
SUBCONTRACTOR DRAWING APPR	4/11/80
DRAWN	4/11/80
DRAWN Wagner	1/80

U. S. Department of Energy
Richland Operations Office
Rockwell Hanford Operations
Richland, Washington 99352
Nuclear Systems Associates, Inc.
Anderson, California 96001

TOOL CHANGE MACHINE

PROTOTYPE WASTE RETRIEVAL SYSTEM

SCALE 3/4" = 1'-0"

DRAWING NO. SK-2-60014 SHEET NO. 1 OF 3

REFERENCE DRAWINGS

NEXT USED ON

REVISION APPROVALS

REVISIONS

COMMENT PRT ISSUE NO. CHECK PRT ISSUE NO.

DRAWING STATUS

FIGURE 2-15. Tool Change Machine.

2.3 WASTE MATERIAL REMOVAL SUBSYSTEM

The waste removal subsystem operates in the waste tank, the filling room, and its associated tower of the retriever.

Its primary components are the material elevator, the funnel assembly and associated controls. The material elevator consists of a bucket assembly to carry and dump the wastes, a hoist assembly to raise and lower the bucket, a telescoping tube assembly to guide and laterally support the bucket, and a counterweight assembly to control cable and hose slack during vertical travel. The funnel assembly is used to channel and wash the waste material into the shipping container. The subsystem has been designed for a minimum waste removal rate of 10 gallons per minute.

2.3.1 Bucket Assembly

Mounted to the lower end of the elevator is the bucket assembly. This assembly is 15 feet long and has a cross section that allows it to pass through the 42-inch-ID waste tank riser with a nominal 2-inch clearance. The bucket assembly consists of a bucket, the main body, a dumping mechanism, a rotation mechanism, and an offset system consisting of two pivoting support arms (Figure 2-16).

The bucket is approximately 35 inches wide, 38 inches long, and 55 inches high. The bucket shape is based upon the 24 cubic foot capacity requirement, the nominal riser clearance specified above and the clearance envelope available in the fill room for rotation and dumping. The walls of the bucket are fabricated from 0.5-inch plate and the bottom from 1.0-inch plate. Two 3-inch-diameter trunnions are provided on the side of the bucket for attachment of the supporting arms.

The main body of the material elevator bucket assembly is a 7-foot 3-inch long square tube fabricated from 0.5-inch plate. A flange is provided on the upper end of the main body for attachment of the rotation assembly. Two cylindrical bearing support housings are provided on the lower end of the main body. The two bucket support arms pivot about these housings by means of four bearings. The lower end of the support

arms attach to the bucket trunnions by means of additional bearings. The support arms are basically rectangular tubes, 42 inches long and 4 by 12 inches in cross section.

Two hydraulic cylinders mounted on the outside surface of the main body rotate the support arms 90 degrees relative to the bucket assembly vertical centerline. This offset position provides open space above the bucket during filling operations and transfers the bucket over the container for dumping.

The dumping mechanism is wholly contained inside the main body and support arms. A double-rod hydraulic cylinder mounted inside the main body drives a shaft which passes through the main body bearing housings by means of a double strand roller chain and sprockets. Two other chains inside the support arms connect the sprockets on each end of the shaft with sprockets on the two bucket trunnions. If the support arm internal roller chain systems remain stationary, the bucket will remain in the vertical position as it is pivoted by the arms. When the internal hydraulic cylinder is operated, the internal arm roller chain systems rotate the bucket about the trunnions to a maximum of 180 degrees (bucket inverted).

The bucket assembly rotation mechanism between the main body and the elevation system consists of two cylindrical housings and a 22-inch-diameter bearing equipped with internal gear teeth. An electric motor, gear reducer, and a drive pinion-idler gear arrangement rotate the bearing and the total elevator assembly ±180 degrees about its vertical axis.

2.3.2 Hoist Assembly

The hoist assembly is used to lower the bucket assembly into the waste tank and to raise the bucket assembly with its load of waste material into the retriever. It is identical to the hoist of the mining boom except that it has only a 17-ton capacity with 1-inch-diameter wire rope and a maximum speed of 30 feet per minute with a 40-hp drive motor to match the requirements of the material elevator. It incorporates all features of the mining boom hoist discussed above.

2.3.3 Telescoping Tube Assembly

The telescoping tube system of the material elevator is nearly identical to the telescoping tube system of the mining boom. The only difference is that the tubes and carriage are shorter because the bucket assembly requires a maximum of 62 ft of vertical travel.

2.3.4 Counterweight Assembly

The material elevator counterweight system is identical in function and components to the counterweight system of the mining boom. The only difference is the length and size of the electrical cables and hydraulic hoses.

2.3.5 Funnel Assembly

The funnel directs waste material from the material elevator bucket into the shipping container. The funnel assembly also has features to flush the material elevator bucket and the funnel surface (Figure 2-17).

The funnel assembly consists of the basic funnel, a mechanism to pivot the funnel over the fill station, a mechanism to lower the funnel into the open shipping container, the flush system, and the necessary supporting structure.

The funnel is constructed of an 0.25-inch plate measuring in diameter approximately 84 inches at the top, tapering to 55.5 inches at the bottom. A circular tapered flange around the funnel mates with another tapered flange around the turntable fill station opening when the funnel is lowered into the container, providing guidance and seating.

The funnel is supported by a frame attached to the filling room wall by means of a pivot mechanism and elevation mechanism. The pivot system consists of a vertical shaft and bearing arrangement which is pivoted by a hydraulic rotary actuator. The elevation mechanism consists of a vertical acme screw and nut arrangement which is driven by an electric motor-gear reducer located in the shipping and receiving room beside the hydraulic control components. Shafts, couplings, and a right

angle drive connect the reducer through the wall to the drive screw. The main structure supports the funnel assembly from the turntable enclosure and fill room wall.

The funnel flush system consists of a 1-inch tube provided with slotted holes, attached to the upper edge of the funnel. Waste water, supplied from the drain system, flows out the slots and washes waste material from the funnel surface into the shipping container. The material elevator bucket flush system consists of a single conical pattern spray nozzle mounted on a pivoting frame. After the waste material is dumped from the bucket, the frame and nozzle are pivoted into position by a hydraulic rotary actuator. The nozzle flushes waste material from the bucket into the shipping container. Used wash water, collected and stored in a tank in the mining room, is pumped into the shipping container through an additional 2-inch pipe at the top of the funnel. Flex lines connect the flush manifolds to the drain system piping. Structural materials include round and square tubing for frame and support, stainless steel for the funnel, guide flange, and piping, and the balance of components from carbon steel coated with epoxy paint. The total weight of the funnel assembly is 2130 lbs.

2.3.6 Subsystem Controls

All of the waste removal subsystem equipment is operated remotely either from the control trailer in the manual or semiautomatic control mode or from the personnel corridor of the waste retriever in the manual mode. In the manual mode, single-axis joysticks or spring return pots are used to initiate the signal to operate the solenoid valves of the hydraulic actuator or the electric motors. For the semiautomatic mode, the equipment is controlled in discrete sequential steps by pushbuttons arranged in vertical columns. The operator initiates each step by momentarily depressing the associated pushbutton. An example is the set of pushbuttons labeled FILL SHIPPING CONTAINER SEQUENCE. In this sequence, after the material elevator in the tank has been filled by the

articulated arm mining operations, the following steps occur: the bucket arms are lowered to put the bucket in line with the riser and simultaneously the whole material elevator assembly is rotated to the proper angular orientation for dumping, the material elevator is raised to the filling room, the bucket arm is raised to the dumping position, and the bucket is dumped and rinsed. The bucket arms are then lowered to return the bucket in line with the riser. It is lowered into the tank, rotated, and raised into position for receiving more material from the articulated arm.

While each operation is in progress (such as the bucket arm traveling from its vertical to a horizontal position) a green light, called a running light, is displayed in the pushbutton. When the equipment item, for example, reaches its destination and actuates a limit switch, the equipment stops and the green light in the pushbutton turns to white, indicating completion of the operation. The next step is interlocked so it cannot be initiated by the operator until the prior step has been completed. Moreover, the operator is expected to satisfy himself by observation that the step has been completed satisfactorily. He can observe adverse conditions that are not directly monitored by sensors. His initiation of the next step serves as verification that he has observed no problems.

The operator is not necessarily confined to the sequential steps. The interlocking system permits backtracking or reversing operations in some unusual situation. In the sequence mentioned above, for example, the filled material elevator bucket could be lowered back into the tank without dumping perhaps to wait for the availability of an empty shipping container.

NOTES: UNLESS OTHERWISE SPECIFIED
1. DESIGN AND FABRICATION TO BE IN ACCORDANCE WITH SPECIFICATION NT9-028-506.
2. DESIGN AND FABRICATION OF THE CCTV SYSTEM TO BE IN ACCORDANCE WITH SPECIFICATION NT9-028-608.
3. DO NOT FABRICATE FROM THIS DRAWING

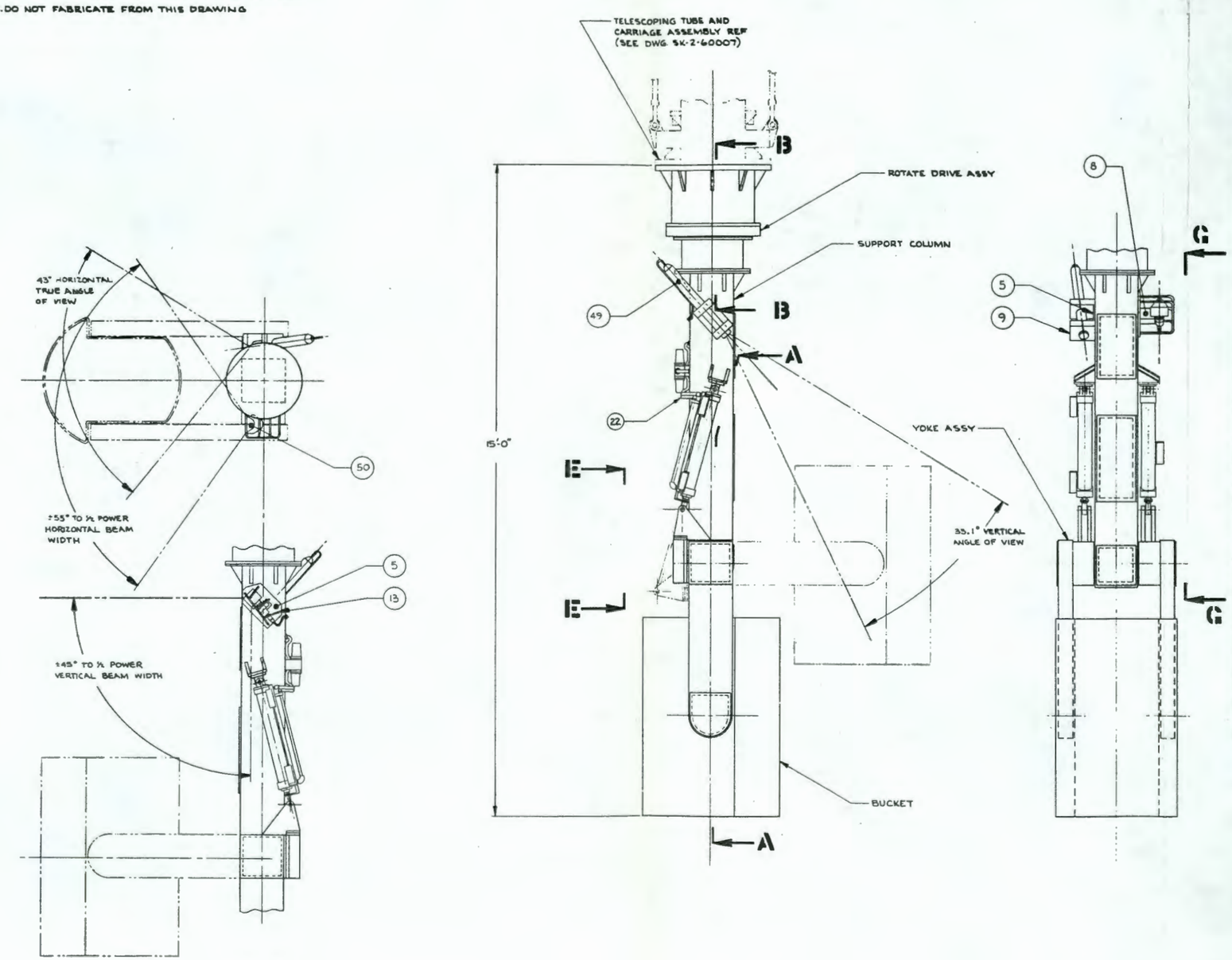

QTY		PT NO	DESCRIPTION		MATL/REF
		1			
	AR	2	PLATE	.12 THK	ASTM-A240 SS
	AR	3	PLATE	.25 THK	
	AR	4	PLATE	.38 THK	
	AR	5	PLATE	.50 THK	
	AR	6	PLATE	.75 THK	
	AR	7	PLATE	1.00 THK	
	AR	8	PLATE	1.50 THK	
	AR	9	PLATE	2.00 THK	ASTM-A240 SS
		10			
		11			
		12			
	AR	13	BAR	.50 DIA	ASTM-A276 SS
	AR	14	TUBE	4.0 O.D. X .75 WALL	ASTM-A269 SS
	AR	15	BAR	1.5 DIA	AMS-5643 SS
	AR	16	BAR	3.0 DIA	AMS-5643 SS
	AR	17	BAR	3.5 DIA	AMS-5643 SS
	AR	18	BAR	9.0 DIA	ASTM-A276 SS
	AR	19	ANGLE	1.0 X 1.0 X .12	ASTM-A479 SS
	AR	20	BILLET	14.0 X 14.0	ASTM-A316 SS
		21			
	AR	22	HYDRAULIC LINE, FLEXIBLE		
	AR	23	HYDRAULIC LINE, SOLID (ST STL)		
	2	24	SOLENOID VALVE, 4 WAY, 3 POS., HYD.		
	2	25	HYDRAULIC COUPLING		
	2	26	ELECTRICAL COUPLING		
	1	27	ELECTRICAL COUPLING		
	1	28	MOTOR, D.C. ¾ H.P 7590T OR EQUIV.		EASTERNCRAFT MENLO PARK, CALIF
	1	29	REDUCER 7VM OR EQUIV		WINSMITH SPRINGVILLE, N.Y.
	1	30	COUPLING FC 38 OR EQUIV		BOSTON GEAR QUINCY, MASS
	1	31	ROTATING UNION MODEL 2015 OR EQUIV		DEUBLIN CO NORTHBROOK, ILL
	6	32	LIMIT SWITCH HEAVY DUTY LS		MICRO SWITCH FREEPORT, ILL
	2	33	HYDRAULIC CYLINDER 3¼" BORE X 24" STROKE		
	1	34	HYDRAULIC CYLINDER 2" BORE X 12" STROKE		
	3	35	LIMIT SWITCH BRACKET EASY MOUNT (HORIZONTAL)		UNITROL CORP. FERNDALE, WASH
	1	36	ENCODER		
		37			
	AR	38	CHAIN, ROLLER ANSI 80, DOUBLE STRAND		
	1	39	BEARING L6-16P9Z ROTEK OR EQUIV		ROTEK INC. AURORA, OHIO
	4	40	BEARING SB-22208 OR EQUIV.		MCGILL MFG. CO. INC. VALPARAISO, INDIANA
	4	41	BEARING NA 4844 OR EQUIV.		INA BEARING CO. INC. CHERAW, S. CAROLINA
	4	42	BEARING NA 6917 OR EQUIV		INA BEARING CO. INC. CHERAW, S. CAROLINA
	2	43	BEARING SB-22216 OR EQUIV		MCGILL MFG. CO. INC. VALPARAISO, INDIANA
	1	44	GEAR	4 PITCH, 20° PA, 4.5 P.D., 18 TEETH	
	1	45	GEAR	4 PITCH, 20° PA, 7.0 P.D., 28 TEETH	
	4	46	SPROCKET, DOUBLE STRAND	¾ PITCH, 8.08 P.D. 32 TEETH	
	2	47	SPROCKET, DOUBLE STRAND	¾ PITCH, 8.15 P.D. 34 TEETH	
	AR	48	CHAIN, ROLLER	ANSI 60, DOUBLE STRAND	
	1	49	CCTV CAMERA	MODEL TC-125-SN-RAD WITH 16 MM LENS	HYDRO PRODUCTS SAN DIEGO, CALIF.
	1	50	LIGHT	MODEL HQ-250	HYDRO PRODUCTS SAN DIEGO, CALIF.

CALCULATED WEIGHT: EMPTY = 4355 lbs
LOADED = 6879 lbs (244 ft³ WASTE)

DRAWING APPROVALS	DATE
APPD FOR PRODUCT ASSURANCE	3/21/62
APPD	3/19/62
APPD	
APPD	
DRAFTING APPD	3/20/62
CHKD	3/19/62
DRAWN W. Winder	3/15/62

U. S. Department of Energy
Richland Operations Office
Rockwell Hanford Operations
Richland, Washington 99352
Nuclear Systems Associates, Inc.
Fullerton, California 92631

MATERIAL ELEVATOR BUCKET ASSEMBLY
PROTOTYPE WASTE RETRIEVAL SYSTEM
SCALE 1" = 1'-0"
SK-2-60008 SHEET 1 OF 3

REFERENCE DRAWINGS
NEXT USED ON
REVISIONS
COMMENT PRT ISSUE NO
CHECK PRT. ISSUE NO
DRAWING STATUS

FIGURE 2-16. Elevator Bucket.

NOTES: UNLESS OTHERWISE SPECIFIED

1. DESIGN AND FABRICATION TO BE IN ACCORDANCE WITH SPECIFICATION N79-028-S04
2. DO NOT FABRICATE FROM THIS DRAWING

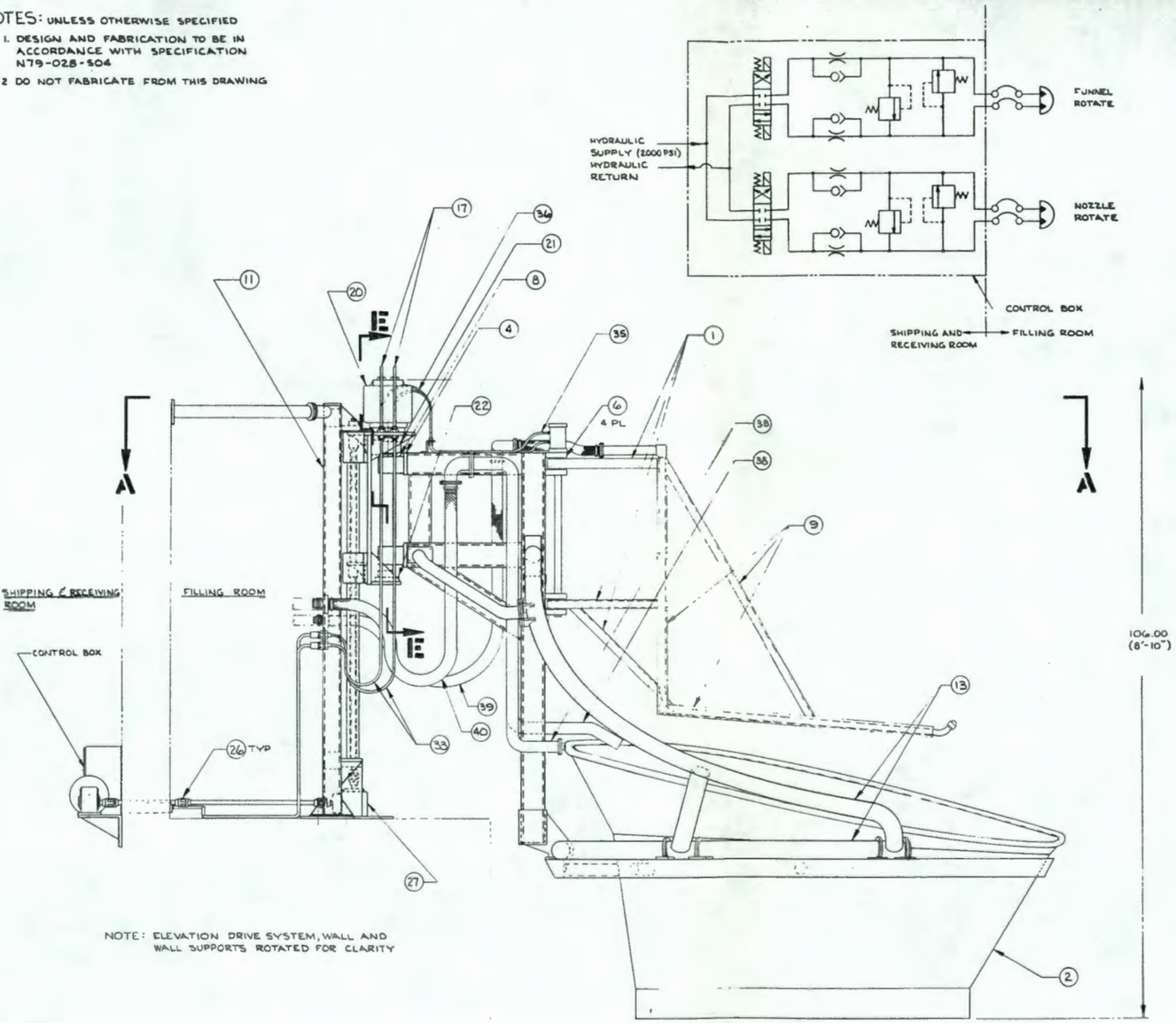

NOTE: ELEVATION DRIVE SYSTEM, WALL AND WALL SUPPORTS ROTATED FOR CLARITY

CALCULATED WEIGHT: 2130 lbs

QTY	PY NO	DESCRIPTION	MATL/REF
AR	1	3.0 X 1.5 X .18 WALL RECT TUBE	ASTM-A36 C.S.
AR	2	.25 PLATE	ASTM-A240 S.S.
AR	3	.38 PLATE	ASTM-A240 S.S.
AR	4	.50 PLATE	ASTM-A36 C.S.
AR	5	.75 PLATE	ASTM-240 S.S.
AR	6	1.00 PLATE	ASTM-A36 C.S.
AR	7	3.00 SQ BAR	ASTM-A276 S.S.
AR	8	3.00 PLATE	ASTM-A36 C.S.
AR	9	MC 3 X 7.1 CHANNEL	ASTM-A36 C.S.
AR	10	2.0 DIA BAR	ASTM-A36 C.S.
AR	11	3.0 X 4.0 X .25 RECT. TUBE	ASTM-A36 C.S.
AR	12	4.0 X 4.0 X .25 SQ. TUBE	
AR	13	3.0 O.D X .18 WALL TUBE	
AR	14	2.0 O.D X .18 WALL TUBE	
AR	15	C 3.0 X 5 CHANNEL	ASTM-A36 C.S.
AR	16	.75 BAR	ASTM-A306 C.S.
AR	17	1/8" TUBE, HYDRAULIC	
2	18	2.50 O.D X .25 WALL TUBE	
1	19	ROTARY ACTUATOR DS-3-3 (TORQUE-MOR)	EATO ACTUATOR CORP. ST. CLAIR SHORES, MICH
1	20	ROTARY ACTUATOR HS-10-2EVMAI (HYD-RO-AC)	BIRD-JOHNSON CO. WALPOLE, MASS.
1	21	PILLOW BLOCK BEARING 64578-MB	BOSTON GEAR QUINCY, MASS.
1	22	FLANGED BEARING 64595-MBF	BOSTON GEAR QUINCY, MASS.
4	23	LINEAR BEARING SPB-32-ADJ	THOMSON MANHASSET, N.Y.
1	24	BALL SCREW 1150-0200-SRT	SAGINAW SAGINAW, MICH.
2	25	BALL SCREW NUT (COMPATIBLE W/ITEM 24)	SAGINAW SAGINAW, MICH.
4	26	COUPLING FC 15-3/4	BOSTON GEAR QUINCY, MASS.
1	27	RIGHT ANGLE DRIVE MODEL 200	CURTIS MACHINE CO. DODGE CITY, KAN.
1	28	REDUCER 1MCTRW RATIO 10:1	WINSMITH SPRINGVILLE, N.Y.
1	29	BRAKE MOTOR 1/2 H.P.	
2	30	SHAFT 2.0 DIA THOMSON 60 CASE CLASS L	THOMSON MANHASSET, N.Y.
2	31	SHOCK 1X1 (BACK FLANGE MOUNTED)	TAYLOR DEVICES INC. N TONAWANDA, N.Y.
4	32	BULKHEAD CONNECTOR	
AR	33	3/8" HOSE, HYDRAULIC	
1	34	TORQUE-TENDER MODEL TT2X	HELLAND MINNETONKA, MINN.
AR	35	1/4" TUBE, HYDRAULIC	
AR	36	1/4" HOSE, HYDRAULIC	
AR	37	1 1/2" TUBE, WATER	
AR	38	2" TUBE, WATER	
AR	39	1 1/2" HOSE, WATER	
AR	40	2" HOSE, WATER	
4	41	VALVE, PRESSURE RELIEF	
4	42	VALVE, FLOW CONTROL	
2	43	VALVE, 4 WAY, 3 POS, SOLENOID	
AR	44	1" TUBE, WATER	
1	45	NOZZLE 3/4 HH7	SPRAYING SYSTEMS WHEATON, ILL.

FIGURE 2-17. Funnel.

DRAWING APPROVALS	DATE
APPD FOR QUALITY ASSURANCE	4/4/84
APPD	2/14/84
APPD	
APPD	
RESPONSIBLE ENGINEER	4/11/84
DRAFTING APPD	
CHECKED	4/13/84
DRAWN W.W.Winder	4/13/84
CLASSIFICATION	BY

U. S. Department of Energy
Richland Operations Office
Rockwell Hanford Operations
Richland, Washington 99352
Nuclear Systems Associates, Inc.
Fullerton, California 92631

FUNNEL ASSEMBLY

PROTOTYPE WASTE RETRIEVAL SYSTEM

SCALE 1/8 | DRAWING NO SK-2-60012 | SHEET NO 1 | SHEETS 2

REFERENCE DRAWINGS

NEXT USED ON

REVISION APPROVALS

REVISIONS

COMMENT PRT ISSUE NO | DATE | CHECK PRT ISSUE NO | DATE

DRAWING STATUS

2.4 CONTAINER HANDLING SUBSYSTEM

The container handling subsystem includes a 25-ton overhead crane with a lifting fixture, a turntable system, and a lid-handling machine. Although not part of the waste retriever, the description of the waste transfer vehicle and the waste containers are included.

2.4.1 Waste Container Set

A container set consists of a shielded shipping container within an unshielded sealing container. The shipping container is capable of transporting anything from wash water and pourable slurry to chunks of salt cake and miscellaneous debris (Figure 2-18).

2.4.1.1 Shipping Container. The shipping container has a 60-inch inside diameter and an overall height of 78.5 inches for a capacity of 96 ft^3. The walls and bottom of the container consists of 1.5 inches of poured lead sandwiched between 0.5-inch plates. A heavy flange forms the top edge of the container. The flange is equipped with two 3-inch-diameter trunnions which rotate the shipping container with the 25-ton crane and lifting fixture.

The 72-inch-diameter lid is equipped with a grapple handling lug at the center and six pneumatically operated locking devices. The lid also contains 1.5 inches of poured lead and is equipped with double-O rings mounted in dove-tailed grooves for sealing to the container. The locking devices consist of pneumatic cylinders connected to tapered pins. The pins protrude through holes in the lid's outer flange and engage a tapered groove in the container flange. The pins are maintained in the extended (locking) position by compression springs. When the lid is to be removed, the pneumatic cylinders are pressurized to retract the pins.

The lid handling lug interfaces with the grapple on the lid handling machine. When the grapple is locked onto the lug, a poppet-equipped, quick-disconnect type fitting in the lug supplies pneumatic pressure to the locking cylinders as required.

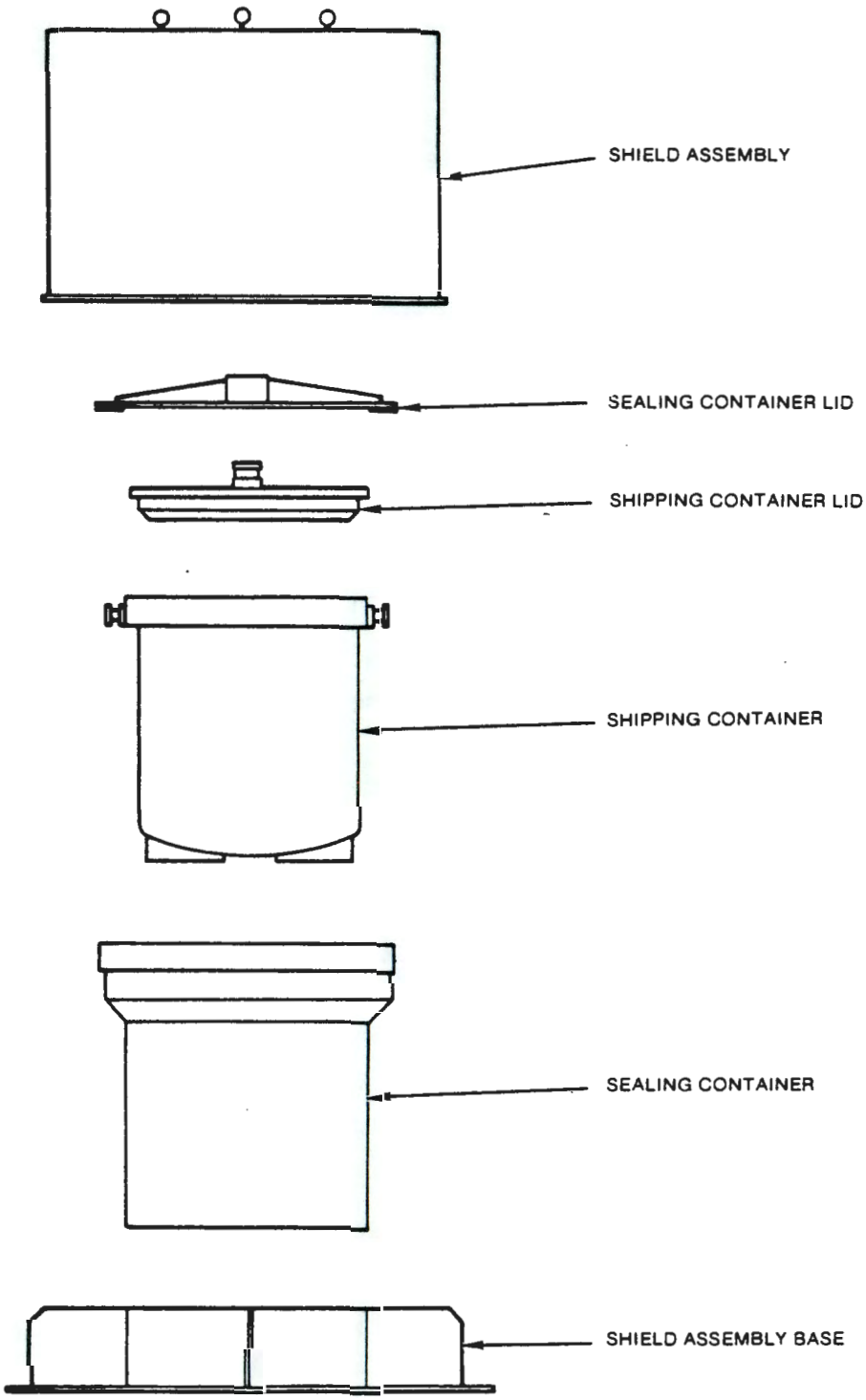

FIGURE 2-18. Waste Containers.

For corrosion resistance and ease of decontamination, the lid and container are completely fabricated from stainless steel (except for items such as O rings). The lid weighs 5470 lbs. The container weighs 15,800 lbs. A filled container has a maximum total weight of 31,500 lbs including the lid.

2.4.1.2 Sealing Container. The sealing container has a 68.5-inch inside diameter, an overall height of 84.25 inches and is designed to completely enclose the shipping container. The container wall is formed from 0.5-inch plate and the container bottom from 1-inch plate. The top of the container is formed by an 8-inch thick flange with an overall outside diameter of 88.0 inches. The flange is provided with two 3-inch-diameter trunnions which rotate the container with the 25-ton crane and lifting fixture. The trunnions on the shipping container and sealing container are equally spaced to allow both containers to be moved with the same nonadjustable lifting fixture. Standard channels are attached to the container inside surface to form guides for installation of the shipping container. In addition, "pockets" are provided in the inside diameter of the upper flange to allow clearance for shipping container trunnions and engagement/disengagement of the lifting fixture hook when the shipping container is installed in the sealing container.

The sealing container lid is an 0.75-inch thick disk with three stiffeners and handling shackles. A flat gasket, attached to the lid, seals the lid to the container. The lid is attached to the sealing container body by means of sixteen 1-inch bolts.

The sealing container and lid are fabricated from carbon steel except for the guides which are fabricated from stainless steel. The carbon steel components are coated with epoxy paint for corrosion resistance and ease of decontamination. The container weighs 7140 lbs and the lid 1790 lbs.

The total weight of a filled and lidded container set is 40,400 lbs.

2.4.2 Turntable Assembly

The turntable assembly of the waste retriever is used to remotely transfer the shipping containers between the unshielded shipping and receiving room and the shielded fill room. It is capable of processing one shipping container through the retriever every 72 minutes. It consists of a large diameter turntable within a sealed and shielded enclosure. The enclosure provides a loading/unloading station in the shipping and receiving room and a fill station in the fill room, each equipped with remotely operated hatch. The assembly also provides a wash station in the shipping and receiving room to wash each shipping container after filling. The turntable assembly is capable of processing three shipping containers simultaneously, one at the loading/unloading station, one at the fill station, and the third being decontaminated at the wash station (Figure 2-19).

The turntable is a circular, carbon steel, truss-like structure and consists basically of three equally spaced container support frames mounted on top of a 19-foot-diameter main frame. Each support frame consists of a 75-inch ring supported by tabular columns. When a shipping container is placed on the turntable, it is supported by means of its upper flange resting on the support frame ring.

Cylindrical enclosures of stainless steel are provided with each support frame to environmentally isolate the shipping container from the internal atmosphere of the turntable enclosure. When the turntable is positioned at the stations, inflatable seals incorporated into the station hatch openings seal against the top of these enclosures. When the hatches are open, these seals isolate the turntable enclosure atmosphere from the shipping-receiving and fill room atmospheres. When the hatches are closed, the containers are completely environmentally sealed within their individual enclosures.

The upper cylindrical enclosure of each support frame is equipped with a drain port and a quick disconnect type fitting. When a shipping container is being sprayed in the wash station, a drain line is remotely

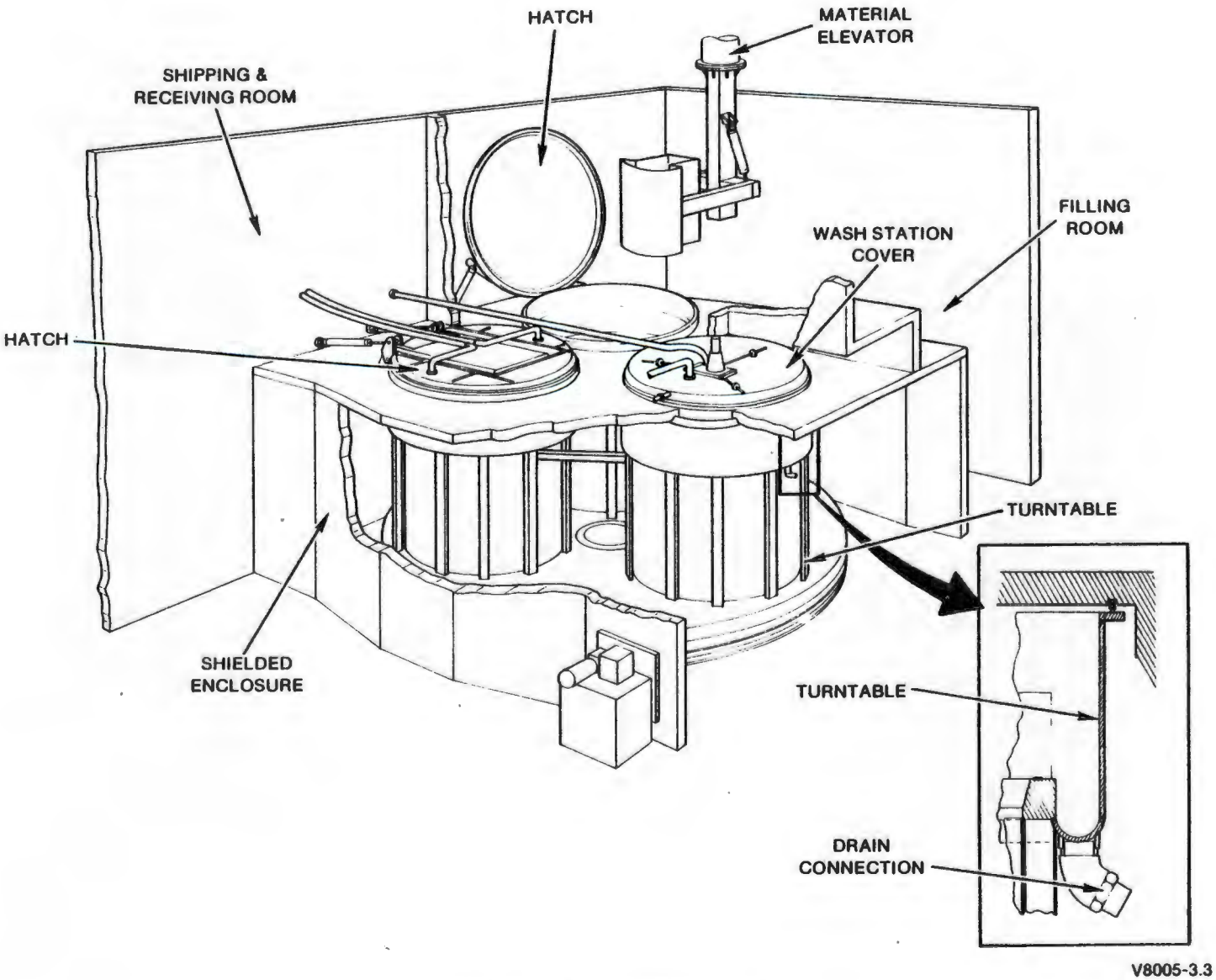

FIGURE 2-19. Turntable.

connected to the drain port such that waste wash water can be collected and drained to the disposal system.

The turntable rotates on a central 16-inch bearing and nine perimeter rollers mounted on the main frame of the turntable. The center bearing and its support structure and the track on which the rollers turn are bolted to the retriever main floor beams. The turntable is capable of supporting and rotating three filled shipping containers, each weighing 31,500 lbs (94,500 lbs total).

The turntable drive system consists of a roller chain and sprocket arrangement designed to function similar to a gear system. A 1-1/4 pitch, double-strand roller chain is attached to the outside circumference of the turntable main frame, thus forming a large gear-like configuration with an approximate pitch diameter of 19 ft. The drive assembly consists of a 1/2-hp electric motor and gear reducer, driving a 28-inch-diameter double-roller chain sprocket. The components are mounted in a support frame forming a single module. When the drive assembly is installed in the enclosure, the large sprocket mates with the roller chain on the turntable, thus providing the capability of rotating the turntable in either direction. With the drive assembly in the installed position, the motor and reducer are located outside of the turntable enclosure, in the shipping and receiving room, for contact adjustment and maintenance. The drive assembly can also be removed as a unit for maintenance.

The turntable and its enclosure are centered between the shipping and receiving room and the fill room. The enclosure is constructed from I-beams and channels covered with an 1/8-inch skin to environmentally isolate the turntable and the enclosure interior from the two room atmospheres. Shielding is provided by 1-1/2-inch lead plate installed in the vertical enclosure walls between the frame and the skin. The stainless steel enclosure skin in the fill room is welded in place to maintain environmental sealing. The enclosure vertical panels of carbon steel in the shipping and receiving room are bolted and can be removed for maintenance or turntable removal.

Each enclosure station (loading/unloading, fill and wash) provides a 90-inch-diameter opening in the enclosure top surface. A circular ring with an 86-inch ID is bolted into each opening. The rings contain inflatable seals for the turntable station sealing and also provide a sealing surface on top for the hatches or wash station cover. The fill station ring also includes a tapered funnel interface. The loading/unloading station and the fill station are each equipped with a hatch remotely operated by two hydraulic cylinders. In addition, fill and return ducts are provided in each hatch to allow flushing of the enclosed volume between the container and the closed hatch, prior seal deflation and turntable rotation.

The wash station cover is bolted in place over the wash station opening in the turntable enclosure. The cover contains a rotating spray manifold for high pressure water washing of each filled container and a hot air supply manifold for container drying. The water supply, air supply, and return lines penetrate for cover for connection to the various systems piping. The rotating manifold drive motor is mounted on top of the cover for ease of maintenance.

The hydraulic and pneumatic control components of the hatch actuators and inflatable seals are located in the shipping and receiving room for hands-on maintenance. The complete turntable system is operated remotely from the control trailer by a preprogrammed automatic system. Limit switches, pressure switches, and an encoder on the turntable drive system are used to monitor operation and position.

2.4.3 Lid Handling Machine

The lid handling machine is used to remotely remove and install the shipping container lid in the filling room. It is capable of lifting the lid 8 feet, 9 inches to provide clearance for the filling operations. The machine consists of a grapple assembly, a telescoping tube system, a hoist system, and a support frame mounted to the main structural members directly over the fill station. The lid handling machine forms a module which can be handled as a unit for installation/removal and maintenance (Figure 2-20).

The grapple assembly, attached to the lower end of the telescoping tube system, consists of an 8.5-inch-diameter cylindrical housing that surrounds the lug on the container lid. An inner sleeve, containing locking balls, is operated by two pneumatic cylinders to lock the grapple onto the lug. The inner sleeve contains a poppet-equipped pneumatic fitting which mates with a matching fitting on the lug. This feature allows pneumatic pressure to be supplied to the container lid's locking system.

The telescoping tube system provides lateral support and guidance for the grapple during raising and lowering operations and consists of three square tubes guided by a series of rollers and a support collar mounted on the support frame.

The hoist system consists of a 3.5 hp electric motor, a gear reducer and a 12-inch-diameter cable drum equipped with two independent 1/2-inch cables wrapped on right and left hand grooving. The two cables, each attached to the grapple by means of a turnbuckle assembly, raise and lower the grapple and lid as required. The motor, reducer, and drum are mounted on top of the support frame and connected by a drive shaft and coupling arrangement.

The pneumatic control components (solenoid valves, flow control valves, etc.) for the grapple operating system and the container lid locking system are attached to the handling machine frame. The control components are connected to the grapple by two pneumatic hoses mounted on a spring operated hose reel.

The lid handling machine will be operated from the control trailer using closed circuit television or it may be operated from the personnel corridor using local control stations during special safety and maintenance operations. Limit switches and a torque sensor are provided on the machine to monitor travel and loading conditions. It is fabricated primarily from carbon steel and coated with epoxy paint. The module weighs 4400 lbs.

2.4.4 Overhead Crane

The container handling subsystem uses a 25-ton overhead crane with its lifting fixture to:

- Remove the protective enclosure of the waste transfer vehicle
- Remove and transfer empty container sets from the vehicle into the waste retriever
- Remove the lid of the sealing container
- Remove the empty shipping container from the sealing container, transfer it to and place it in the turntable.
- Remove the filled shipping container from the turntable, transfer it to and place it in the sealing container
- Replace the lid on the sealing container
- Pick up the filled container set and transfer and place it on the waste transfer vehicle
- Replace the protective enclosure over the container set on the waste transfer vehicle.

The crane operates both in the shipping and receiving room of the waste retriever and outside above the transfer vehicles. Its working envelope is approximately 22 feet wide by 40 feet long by 17-1/2 feet high. The major components are the bridge, the trolley, the hoist, the lifting fixture, and the controls.

The bridge travels on 60-lb rails. It is powered by a 2-hp electric motor equipped with a disk brake and has a maximum speed of 40 feet per minute. The top riding trolley requires a 1-hp motor with a disk brake to provide a maximum speed of 30 feet per minute.

The hoist speed varies from 0 to 5 feet per minute. Its drum is single grooved and will accept the full cable length without overlap and is driven by a 10-hp motor. The hoist is equipped with two independent brakes, each rated at 150% of the rated capacity of the hoist. One is a

mechanical load brake that will automatically control the load during lowering to prevent undue acceleration and to hold the load independent of the electric brake. The other is a solenoid-operated hoist brake interlocked with the motor control to stop the drum when power to the motor is interrupted.

Two lifting fixtures are included. One is designed for hands-on operation, the other for remote operations. Both fixtures contain two lifting hooks and a spreader bar assembly to fix the hooks 76 inches apart. A 4-inch-diameter pin is provided in the spreader bar to attach the fixture to the crane. For hands-on operation, a 2-inch pin is provided in the spreader bar for attaching a wire rope sling, used for the installation and removal of the sealing container lid.

The remotely operated lifting fixture uses a remotely operated pin device to lock the lid to the fixture and pneumatic wrenches to loosen the bolts. For remote operation, a separate sealing container lid equipped with captive bolts and heads for remote engagement and with guide pins is required. Also a powered rotate hook would be added to the crane to allow the lifing fixture to be remotely oriented to any angular position.

Control of the crane can be performed from the control trailer and locally from a pendant on the crane or a control panel located in the personnel corridor at the shipping and receiving room window.

2.4.5 Waste Transfer Vehicle

The waste transfer vehicle is used to transport the doubly contained waste from the waste retriever to the onsite waste processing facility. The vehicle consists of a specially designed trailer which is towed by a standard diesel tractor. The waste container set is placed into the center of a protective enclosure tie-down fixture, attached to the bed of the special double-drop lowboy trailer. A protective enclosure is installed over the container set and held in place by the tie-down fixture.

The double-drop lowboy trailer is 10 ft wide with a bed length of 10 ft. The trailer has a payload capacity of 80,000 lbs and weighs approximately 16,000 lbs. The trailer has overall dimensions of 361 inches long by 120 inches wide. The tractor weighs 16,500 lbs and is driven by a 350 hp diesel engine. The tractor wheel base dimension is 180 inches and its overall length is 263 inches.

The tie-down fixture is constructed from a 1-inch thick steel base plate with dimensions of 120 inches by 120 inches. It is bolted to the trailer bed by attaching each of the base plate corners to the trailer bed beams. The base has eight equally positioned gusset plates with 1.5-inch-diameter holes for attachment to the protective enclosure. The waste container sits within a circular retainer that is welded to the tie-down fixture.

The protective enclosure weighs 24,866 pounds and has overall dimensions of 114 inches in diameter by 82 inches high. The walls are constructed of 0.38-inch-thick external circular steel skins which sandwich a shock absorbing material made of aluminum honeycomb. The top is circular, flat, and of similar construction to the wall. There are eight clevis-type tie-down brackets positioned equally around the base of the protective shipping enclosure. These are secured to the tie-down fixture on the trailer using eight 1.5-inch-diameter ball lock pins. Twelve equally positioned shock absorbers are mounted inside the top of the enclosure and extend down to make contact with the container set.

NOTES: UNLESS OTHERWISE SPECIFIED

1. DESIGN AND FABRICATION TO BE IN ACCORDANCE WITH SPECIFICATION N79-028-S04
2. DO NOT FABRICATE FROM THIS DRAWING

QTY	PT NO	DESCRIPTION	MATL/REF
1	31	HOSE REEL 615-23-24G (MODIFIED)	HANNAY REELS WESTERLO N.Y.
2	32	CYLINDER (SINGLE ACTING) 3-6-06-1-5	SCHRADER LOS ANGELES, CA.
2	33	TURNBUCKLE	
1	34	SPRING	
2	35	O-RING	
12	36	LOCKING BALLS (1½" DIA)	ST. STL.
1	37	BULKHEAD CONNECTOR	ST. STL.
1	38	BULKHEAD CONNECTOR	ST. STL.
2	39	DIVERTER	ST. STL.
AR	40	HOSE ½"	
2	41	SOLENOID VALVE, 3 WAY, 2 POSITION	
4	42	FLOW CONTROL VALVE	
AR	43	CABLE ½" DIA	
1	44	TUBE FITTING (MALE CONNECTOR) ½"	
1	45	IDLER HOSE SHEAVE	
1	46	PRESSURE REGULATOR	

QTY	PT NO	DESCRIPTION	MATL/REF
AR	1	.25 THK PLATE	ASTM-A36 C.S.
AR	2	.38 THK PLATE	ASTM-A240 S.S.
AR	3	.50 THK PLATE	ASTM-A36 C.S.
AR	4	1.00 THK PLATE	ASTM-A36 C.S.
AR	5	1.00 THK PLATE	ASTM-A240 S.S.
AR	6	1.50 THK PLATE	ASTM-A36 C.S.
	7		
AR	8	3.75 DIA BAR	ASTM-A276 S.S.
AR	9	5.4 X 9.5 BEAM	ASTM-A36 C.S.
AR	10	5.5 X 10 BEAM	C.S.
AR	11	2 X 2 X .188 WALL SQ. TUBE	C.S.
AR	12	3 X 3 X .313 WALL SQ. TUBE	C.S.
AR	13	5 X 5 X .375 WALL SQ. TUBE	C.S.
AR	14	7 X 7 X .875 WALL SQ. TUBE	C.S.
AR	15	9 X 9 X .50 WALL SQ. TUBE	ASTM-A36 C.S.
AR	16	14 X 14 X 17 LG. BILLET	ASTM-A314 S.S.
AR	17	.37 O.D. X .035 WALL TUBE	ASTM-A269 S.S.
AR	18	.50 O.D X .035 WALL TUBE	ASTM-A269 S.S.
AR	19	10.0 O.D X 1.0 WALL (MAKE FROM 10 IPS)	ASTM-A312 S.S.
AR	20	4.75 O.D X .37 WALL TUBE	ASTM-A269 S.S.
AR	21	4.0 O.D BAR	ASTM-A276 S.S.
AR	22	3 X 3 X .18 WALL SQ. TUBE	ASTM-A36 C.S.
AR	23	.75 X .75 X .08 WALL SQ. TUBE	ASTM-A36 C.S.
40	24	CAM FOLLOWER CYR-1-S	MCGILL VALPARAISO, IND.
2	25	BEARING 6462L-MBP	BOSTON GEAR QUINCY, MASS.
1	26	REDUCER 15 MCTD-50011-RU-L	WINSMITH SPRINGVILLE, N.Y.
1	27	BRAKE MOTOR 3.5 H.P	
1	28	TORQUE SENSOR	
1	29	CABLE DRUM (FABRICATED)	ST. STL.
4	30	HOIST RING CL-25-HR	CABLE LAYNE ST. LOUIS, MO.

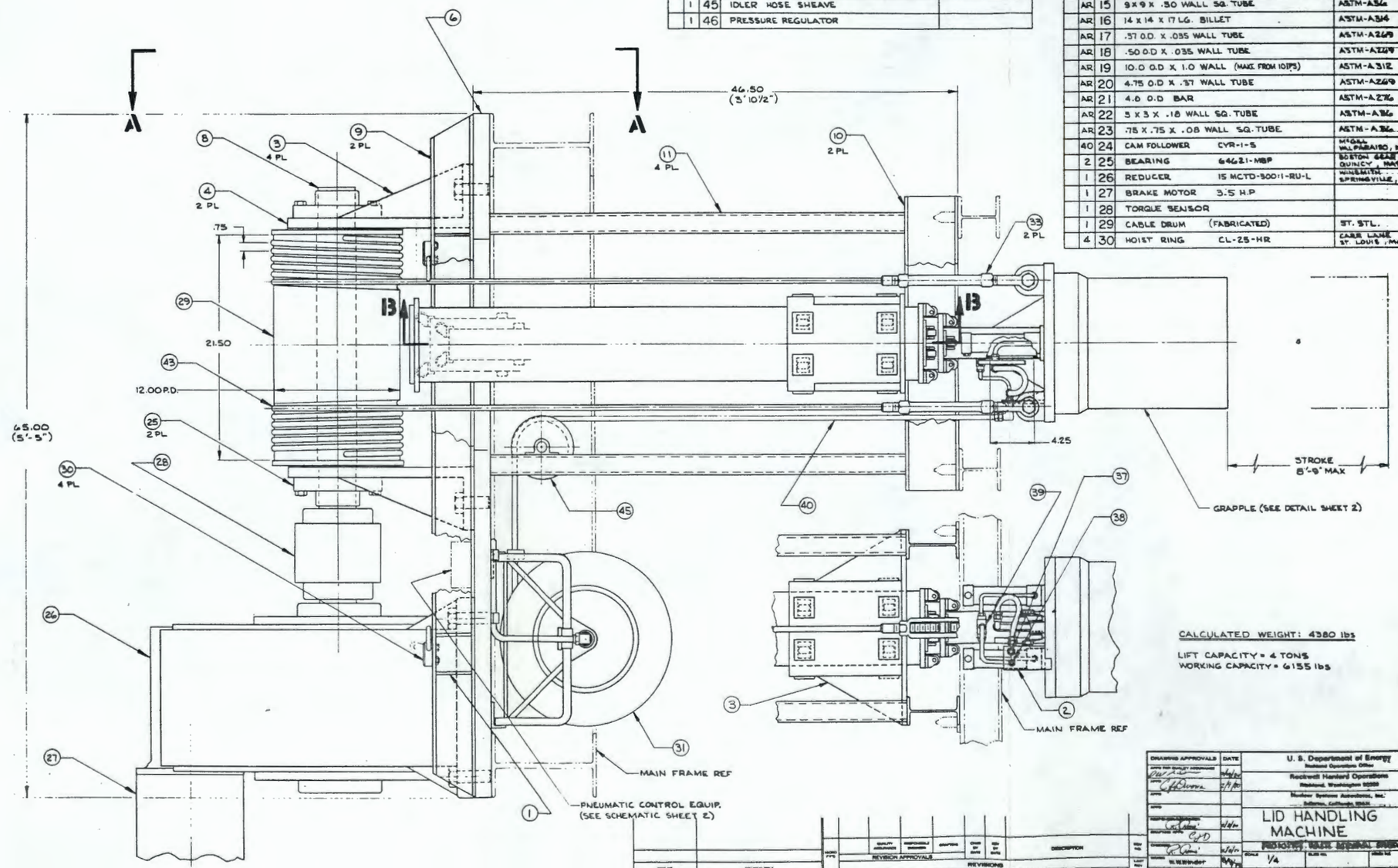

CALCULATED WEIGHT: 4380 lbs

LIFT CAPACITY = 4 TONS
WORKING CAPACITY = 6155 lbs

U. S. Department of Energy
Richland Operations Office
Rockwell Hanford Operations
Richland, Washington 99352
Nuclear Systems Associates, Inc.
Bellevue, California, 95620

LID HANDLING MACHINE

SCALE 1/4
SK-2-60010
SHEET 1 OF 2

FIGURE 2-20. Lid Handling Machine.

2.5 RETRIEVER PLATFORM STRUCTURE

The retriever structure which sets upon three transporters provides environmental isolation and support for the equipment of the waste retriever. It straddles the underground waste storage tank to minimize the loading on the tank dome. The T-shaped structure is of bolted joint, truss construction to provide maximum rigidity and minimum weight. The truss members are fabricated from structural steel I-beams, angles, and square tubing. The wall panels, floor, ceiling panels, and the shielding panels are attached to the truss structure to enclose the retriever. The operational rooms subject to contamination are lined with all welded stainless steel sheeting in order to withstand stringent decontamination processes. The articulated arm and material elevator towers are bolted to the structure as are the three transporter/bolster assemblies.

The center section, which contains the enclosed portion of the retriever, is 24 feet wide by 130 feet long. The two open structural sections, which form the arms of the "T", extend 27.5 feet distally from the side of the retriever. The articulated arm and material elevator towers extend upward 79 and 53 feet, respectively, above the top of the retriever.

Support beams and rails are provided in the shipping and receiving room for the 25-ton bridge crane. The beams and rails also extend out from the end of the shipping and receiving room to allow the crane to be used for waste transfer vehicle loading/unloading. Additional support beams and rails extend through the fill room, the mining room, the tool washroom, the maintenance room, and the personnel room for the 2-ton bridge crane and the bridge-mounted E-M manipulator.

The external walls and roof of the entire enclosed portion of the retriever are covered with standard prefabricated building-type ribbed panels with built-in insulation. The inside surfaces of the retriever room walls, ceilings, and floors are formed by bolting stainless steel plate to the truss members and welding the stainless seams to achieve

airtightness. The floors of the fill room, mining room, and tool washroom shall be sloped to a drain for waste water and decontamination chemicals collection. Additional thermal insulation is provided under the retriever room floor plates.

The portions of the articulated arm and material elevator towers, which contain the telescoping tube and carriage assemblies, are 6 by 6 feet in cross section and are each formed by four vertical square steel tubes at the four corners and covered by steel plate. In addition, sealed enclosures fabricated from structural steel shapes and sheet are provided on each tower to enclose the counterweight/cable slack system and the wire rope hoist systems to accommodate the telescoping tubes as they are fully retracted in the towers. The entire tower assemblies are sealed and form a common atmosphere with the internal retriever.

Shielding is incorporated into the retriever structure to protect personnel from radiation. The most critical requirement is the fill room where shielding is required on all four walls from floor level up to a height of 17 feet. The outside walls are fitted with prefabricated shielding panels which bolt to the outside of the truss structure, under the insulated building panels. The shield panels are formed by sandwiching lead plate between two steel plates. Similar shielding panels are attached to the fill room inside walls. The mining room and tool wash station require less shielding. This is provided by the existing inside steel surface plate and a similar plate welded to the outside surface of the truss structure. The remaining retriever rooms require only the existing inside steel surface plates and the building panels on the outside surfaces. Shielded panels, similar to the fill room panels, are also provided on the material elevator tower from the base to a height of 7 feet above the roof.

The personnel corridor is 4 feet wide and is fabricated from bolted structural steel shapes covered with insulated building panels, including the sloped roof. The floor of the corridor is positioned 5 feet

6 inches above the retriever floor to accommodate the preferred height of the retriever viewing windows.

The total weight of the retriever structure including panels and shielding is approximately 600,000 lbs.

The configuration of the retriever structure is based upon the results of a three-dimensional linear elastic analysis using the SPACE IV computer program. Input loads for the analysis consisted of the dead weight of the retriever, including the concentrated weight of all the retriever components (turntable, articulated arm, etc.), snow load and wind load based on the Uniform Building Code, 1976 edition. In addition, the retriever structure was analyzed for an operational failure mode in which a 100,000-lb horizontal load is imposed on the structure by the crawler transporter on the end of the central section, while the other two transporters are fixed. The structure design is based on the combination of these loads and the allowable stresses for A-36 structural steel per American Iron and Steel Institute specifications. The computer analysis was performed considering 131 joints, 319 members, five load conditions, and six degrees of freedom per joint.

2.6 RETRIEVER ANCILLARY EQUIPMENT

Many features have been built into the waste retriever to assist the retrieval operation. These include equipment for remote maintenance and repair, for remote viewing, for power distribution, and for contamination control.

2.6.1 Equipment for Contamination Control

The spread of contamination is kept low by the use of the wash down system, the ventilation system, and the coupling mechanism.

2.6.1.1 Wash System. The wash system uses high pressure water or detergent to wash the mining boom, the material elevator, and each shipping container processed through the retriever. The system also provides the capability to wash down the interiors of the filling and mining rooms and safely dispose of all liquid waste generated during the wash operations.

The high pressure wash equipment is housed in an enclosure over the retriever personnel room and consists basically of an insulated 600-gallon stainless steel tank and three high pressure piston pumps. Facility water is heated in the tank to 150°F by a 90-kW immersion heater. The hot water is then pressurized to 3000 psi by the pumps and supplied at a maximum rate of 60 gpm to the various equipment wash stations throughout the retriever. Local throttle valves are used as required to provide lower pressure. The tank heater is capable of heating the initial supply of water to 150°F in two hours and maintaining that temperature as water is removed by the pumps and resupplied from the facility.

The articulated arm and material elevator are washed in their respective towers prior to major maintenance operations or periodically to reduce waste deposit buildup. To perform a wash operation, the arm and elevator must be fully retracted into their towers and the hatches on the lower end of the towers are closed. The towers are provided with a series of fixed manifolds equipped with spray nozzles. The rotatable

portions of the articulated arm and material elevator are sprayed with 3000 psi water from flat pattern nozzles. In order to provide complete coverage with minimum water consumption, the arm and elevator are rotated while the individual spray manifolds are sequenced from top to bottom. The nonrotating portions of the arm and elevator (from the telescoping tube interface to the rotating portion) are sprayed by manifolds equipped with 1000 psi full cone pattern nozzles. The top section of the arm and elevator telescoping tube assemblies are flushed with low pressure water to wash off loose dust and debris from the inner telescoping tubes.

Each mining tool, after use in the waste tank, is washed in the wash station adjacent to the mining room. The wash station is equipped with a number of fixed manifolds, equipped with 3000 psi flat spray pattern nozzles. As the tool is rotated by the wash cart which supports it, the spray manifolds are sequenced to provide complete coverage with minimum water consumption. In order to assure complete decontamination, a wash wand is provided in the wash station wall to direct 3000 psi water directly on the working end of each tool. The wash wand is manually operated from the personnel room using a viewing window. The wand is equipped with a ball joint and a telescoping tube arrangement for complete maneuverability.

Each shipping container, after being filled with waste material and lidded in the fill room, is washed in a station incorporated into the turntable enclosure. It is washed with 3000 psi water from a rotating manifold equipped with flat pattern nozzles. The manifold is incorporated into the wash station cover. A remotely engaged/disengaged drain line directs waste water from the enclosure.

The fill room and mining room are each equipped with a high pressure spray wand, mounted on the end of a hose. The wands are maneuvered by the bridge-mounted electro-mechanical manipulator to wash down the interiors of the rooms.

Waste water generated in the various wash stations is collected by drain systems and directed to a sump (holding tank) under the retriever floor. The waste water is then pumped from the sump into a 900-gallon stainless steel waste holding tank in the mining room. A portion of the waste water in the holding tank is pumped to the shipping container fill station after each elevator bucket dump. The balance of the tank waste water, including the "sludge" that may settle to the bottom of the tank, is pumped directly into the open shipping container. In this manner, all waste water collected from various wash operations is eventually removed from the retriever with the solid waste in the shipping containers.

The pressurized hot water is distributed to the various wash stations by means of a stainless steel piping network consisting of 3-inch schedule 80 pipe for the 3000 psi water and various sizes of schedule 40 pipe for the lower pressure water. Distribution and sequencing is controlled by remotely operated pneumatic diaphragm valves.

The waste water system consists of various sizes of schedule 40 stainless steel pipe controlled by remotely operated solenoid valves. Centrifugal pumps are used to distribute the waste water, one on the sump tank and two on the bucket-funnel flush system. Stainless steel strainers are provided in the drain openings of fill room, mining room and tool wash station to prevent large chunks of waste from entering the drain piping. These strainers are remotely replaceable/cleanable.

Instrumentation is provided in the supply tank to monitor and control water level and temperature and in the waste tank to monitor water level. The wash down system also provides for the addition of chemicals or detergents to the wash water as required.

The system is sized for the following wash frequencies: (two 8-hour working shifts per 24 hours).

- One articulated arm wash down every ten 8-hour shifts
- One material elevator wash down every ten 8-hour shifts

- One tool wash every 8-hour shift
- One shipping container wash every 72 minutes
- One material elevator bucket-funnel flush every 18 minutes

The control and operation of the wash down system is performed from the control trailer.

2.6.1.2 Ventilation System. A secondary air circulation system, integral with the retriever, performs two functions. It circulates heated air that dries various components after washing, and it maintains the retriever atmosphere during the times it is not connected to the primary ventilation system via the tank, i.e., while the retriever is moving from one tank to the next. The secondary system contains two 675-cfm blowers in parallel for redundancy and a filter bank consisting of a moisture separator, a prefilter, a HEPA filter, and an activated charcoal filter. Included in the retriever are louvers and ducting to assure that air flow is always from the least contaminated area to the most contaminated area.

2.6.1.3 Coupling Mechanism. The coupling mechanism is used to connect the parts in the mining boom and filling rooms to the tank risers and to prevent contaminants from escaping to the environment. It consists of a riser coupling mechanism and a rotatable cover mechanism. The riser coupling mechanism consists of a remotely operable Hypalon-coated nylon bellows and a sealing flange mounted to the underside of the retriever main floor support structure. Three double-acting pneumatic cylinders 1.06-inch-diameter by 6-inch stroke are used to apply the pressure required to seal the 42-inch riser flange to the flange seal assembly. A pneumatic pressure of 70 psig is applied to the cylinders producing a sealing force of 62 lbs each, for a total of 186 lbs for the three cylinders. The sealing flange is designed to provide remote guidance and seal against a gasket in the riser flange (Figure 2-21).

The coupling mechanism assembly has an overall height dimension of 23.62 inches when extended and 17.62 inches when retracted prior to

sealing. The coupling mechanism has an overall dimension of 54 inches in diameter and weighs about 82 lbs.

The rotatable sealing closure cover module is mounted above the main retriever floor for the articulated arm and below the floor for the material elevator. These modules consist of a pivotable and elevating cover, inflatable seal and cover rotating drive. In order to allow the primary ventilation system air flow to exit the retriever, each pivotable cover is maintained in a raised position 6 inches away from the inflatable seal. The cover elevating mechanism consists of an electric motor drive gear reducer, coupled to a 1-ton capacity machine screw actuator that raises the cover in about 2 minutes and holds it in this position with a motor brake.

The cover rotating drive mechanism consists of an electric motor drive gear reducer that drives a spur gear. The spur gear is attached to the cover pivoting shaft which rotates the cover through a 110-degree arc at 1.2 rpm. A motor brake stops and holds the pivotable cover in either the open or closed position.

2.6.2 Power Distribution Center

The electrical, hydraulic, and pneumatic power systems distribute the power required to operate the system equipment. This equipment is located in the power center room.

2.6.2.1 Electric Power. Electrical power to operate the entire retriever during normal operations is derived from a 2400-V, 3-phase, 60-Hz supply line connected to the Hanford Site power. A 750-kVA transformer reduces the 2400-V input to 480-V, 3-phase, for distribution throughout the retriever and control trailer. Most of the large power-consuming equipment, such as the motors, heaters and TV-lighting systems are designed to operate from the 480-V source. The voltage is reduced again to 208/120-V, 3-phase, to operate instruments, controls, alarms, and other equipment that require the lower voltage. The power distribution panels and motor controllers are conventional, industrial-type units that have provisions for local control but are interlocked and controlled normally from the control trailer.

The connected load is about 900 kW; however, the total power required considering the duty cycle of the various components is approximately 400 kW during the winter season.

Interconnection cables are routed or distributed through cable trays, raceways, and conduits. Fire and radiation resistant materials are specified. The signal and power wiring are separated and critical wiring is routed and isolated from the main cable runs.

2.6.2.2 Hydraulic Power. The hydraulic power system consists of three 30-gpm, variable-displacement, pressure-compensated pumps, each powered by a 40-hp electric motor. The pumps are manifolded together at the common 180-gallon pressurized and temperature-controlled reservoir and also at the output. A solenoid and check valve are provided on each pump outlet enabling the pump to be shut off and prevent fluid backflow through the pump. The pressurized fluid (2000 psi) output is monitored by a flow meter and a pressure indicator. A pressure relief valve set at 200 psi above the working pressure controls the maximum output pressure. The fluid is distributed throughout the retriever to the various hydraulic-powered equipment items. Small needle valves are installed at the high points in the lines to assist in removing trapped air. The return line contains a 10-micron filter equipped with a differential pressure switch to indicate its status.

The hydraulic power system operates on a demand basis and requires operation of two pumps at a time. A third pump is on standby; to ensure equal wear between the units they are operated in rotation.

2.6.2.3 Pneumatic Power. Pneumatic power is provided to the waste retriever by a 120-psi, 23-cfm, electric motor driven compressor with a 60-gallon receiver. A desiccant air dryer filter removes moisture and dust from the air supply. A differential pressure switch monitors the filter status and indicates its condition on the control panel in the control trailer. The air pressure is controlled by pressure regulators at each of the pneumatic powered equipment items.

2.6.3 Remote Viewing System

A closed circuit television (CCTV) system is provided for viewing all waste handling operations, including material elevator bucket filling, container filling and handling, tool maintenance operations, and activities in the personnel corridor. A combination of fixed focal length and zoom lens TV cameras, each with a pan and tilt unit, are provided in the three major rooms of the waste retriever, i.e., shipping and receiving room, filling room, and mining room. In addition, cameras are located in the maintenance room and the tool wash station and on the material elevator and the 25-ton bridge crane.

There is one 14-inch TV monitor that can be switched locally to view any one of the TV cameras of the system. It is located outside the mining room on the personnel corridor wall. There are six additional monitors and a control unit for each camera located in the control trailer.

2.6.4 Equipment for Maintenance and Repair

Included in the waste retriever to facilitate maintenance and repair are a pair of master-slave manipulators, an electro-mechanical manipulator, a 2-ton bridge crane, a 2-ton double-monorail hoist, and a wash cart.

2.6.4.1 Master-Slave Manipulator (M-S). Master-slave manipulators are provided in the mining room external wall, adjacent to the articulated arm riser/tower. A modular enclosure adjacent to the wall forms an M-S manipulator operating room. The manipulators are an "off-the-shelf" rugged duty model capable of handling 100 lbs. They can also be transferred along with the operating module to the material elevator riser/tower area for use in the filling room.

2.6.4.2 Electro-Mechanical Manipulator (E-M). An E-M manipulator is mounted on an overhead bridge which travels on the same rails as the 2-ton bridge crane so that work may be performed in the maintenance room, the mining boom room, and the filling room. The bridge supports

a top-riding carriage which suspends a telescoping tube and hoist assembly. The bridge, carriage, and hoist give the manipulator arm access to all areas of the three rooms it serves.

The manipulator has a load capacity at the hand of 150 lbs. Two interchangeable hands are supplied: a parallel jaw having an opening of 5 inches and a grip force of 0 to 200 lbs, and a hook type having an opening of 3 inches and a grip force of 0 to 800 lbs. A 1000-lb capacity hook is fastened to the shoulder housing, easily reached by the hand.

Control of the manipulator is from the control trailer or locally from control panels at window locations in the personnel corridor and maintenance room.

2.6.4.3 Two-Ton Bridge Crane. The 2-ton overhead bridge crane serves the filling, mining, and maintenance rooms of the waste retriever. Remotely operated doors provided in the internal walls allow the crane passage between the rooms. The crane consists of a 0- to 40-fpm single girder-top running bridge, a 0- to 30-fpm trolley and a 2-speed hoist with a swivel-type hook. Overtravel of the hoist, trolley, and bridge is prevented by limit switches. A load limit switch is provided on the hoist. The crane has a maximum travel of 58 feet along the runway with a lifting height of 11 feet 8 inches. It is controlled from either the control trailer or a control panel at the window locations in the personnel corridor.

2.6.4.4 Two-Ton Monorail Hoist. The 2-ton overhead monorail hoist is located over the maintenance room and tool wash station. It consists of a 0- to 35-fpm trolley and a 2-speed hoist with a swivel-type hook. Limit switches prevent overloading or overtravel. The crane has a maximum travel of 36 feet along the tracks with a lifting height of 18 feet 6 inches. It can be controlled from the control trailer or locally from control panels in the maintenance room or in the personnel room at the maintenance room viewing window.

2.6.4.5 Wash Cart. The tool wash cart supports and rotates the mining boom mounted tools while they are being washed in the wash station, repaired in the maintenance room, or transferred between the two rooms. The wash cart consists of a 9-1/2-foot-high "C"-shaped tubular structure mounted on a rectangular 4-wheel dolly. Over the top of the structure is a saddle assembly which receives and supports the individual tools vertically by means of their guide lugs. It is capable of supporting a 2500-lb load in this fashion. The circular track and roller arrangement of the saddle, driven by a hydraulic motor, enables the tool to rotate ±100 degrees about its vertical axis. One pair of rail wheels on the dolly are driven by a hydraulic motor and roller chain arrangement, permitting a maximum travel speed of 6 fpm. Standard rails provided in the wash station and maintenance room allow the cart and tool to be transferred between the two areas as required. Four rail clamps are provided on the dolly to prevent the cart from overturning during a seismic event or other abnormal loading condition. Festooned hoses and cables, connected to the cart and wash station wall, link the cart to the remote control stations in the maintenance room, the personnel room and the control trailer and to the hydraulic power system. The entire wash cart is fabricated from carbon steel and painted with epoxy paint for corrosion protection and ease of cleaning.

NOTES: UNLESS OTHERWISE SPECIFIED

1. DESIGN AND FABRICATION TO BE IN ACCORDANCE WITH SPECIFICATION N79-028-5012.
2. SPUR GEAR MATERIAL SHALL BE HEAT TREATED CAST STEEL SAE 1035, BRINELL NO. 250 OR BETTER.
3. THE HYDRAULIC SCHEMATIC FOR THE COUPLING ASSEMBLY, PART NO. 32, IS SHOWN ON DRAWING SK-2-60026, SHEET 4.
4. THE PNEUMATIC SCHEMATIC FOR THE INFLATABLE SEAL, PART NO. 27, IS SHOWN ON DRAWING SK-2-60026, SHEET 1.
5. USE LOCKING BARS FOR AIR CYLINDERS DURING RETRIEVER TRANSPORT
6. LOCAL CONTROL FOR COUPLING OPERATION
7. DO NOT FABRICATE FROM THIS DRAWING

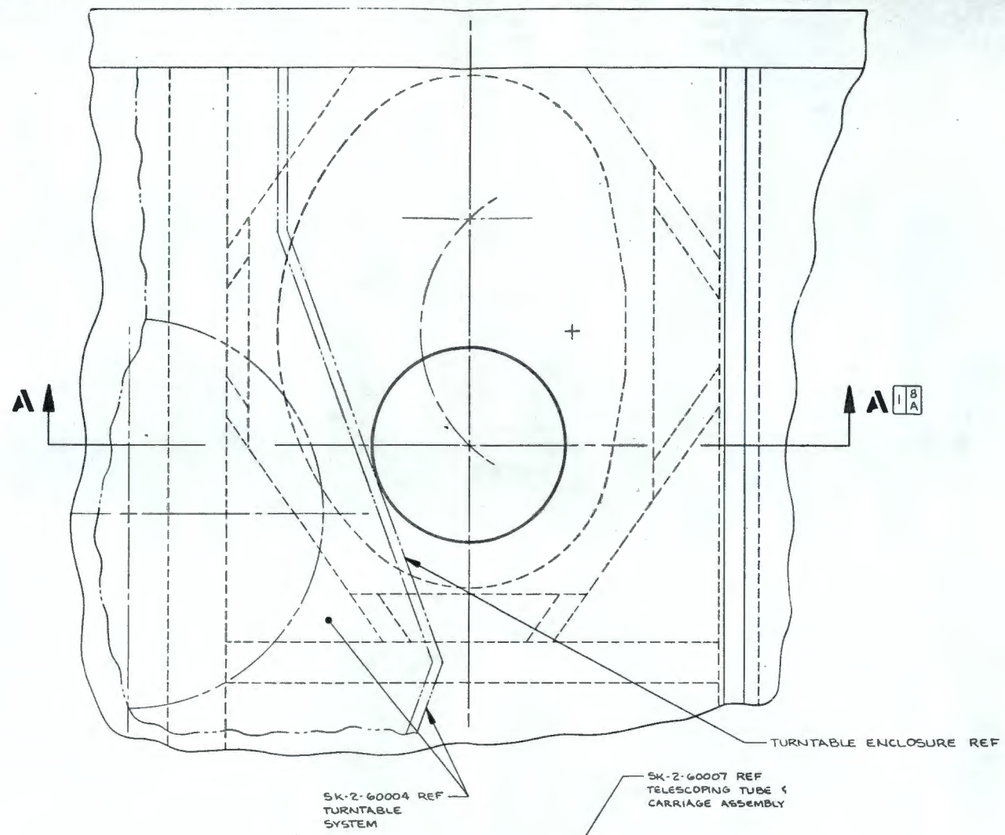

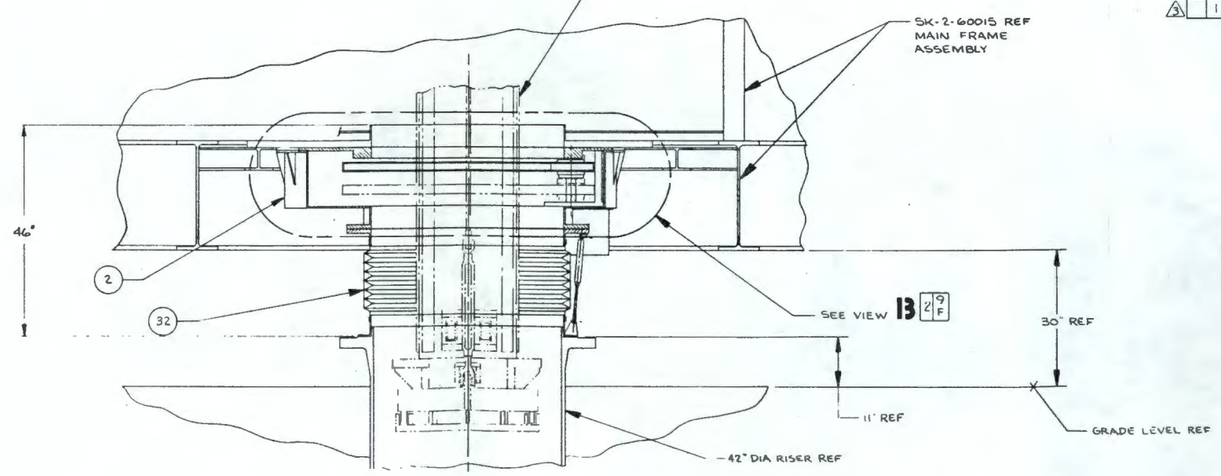

SECTION A-A 1 5 E

QTY		PT NO	DESCRIPTION		MATL/REF	
	X	1	ASSEMBLY			
X	1	2	VALVE ASSEMBLY			
		3				
		4				
AR		5	3/32" THK SHEET		ASTM-A6	C5
AR		6	1/4" THK PLATE			
AR		7	3/8" THK PLATE			
AR		8	1/2" THK PLATE			
AR		9	3/4" THK PLATE			
AR		10	1" THK PLATE			
AR		11	1 1/2" THK PLATE			
AR		12	2 1/2" THK PLATE			
AR		13	+ THK PLATE		ASTM-A6	C5
		14				
		15				
1		16	BALL SPLINE BEARING	LBF 70	THK CO., LTD TOYKO, JAPAN	
1		17	BALL SPLINE SHAFT	LBF 70	THK CO., LTD TOYKO, JAPAN	
2		18	ROLLER BEARING CONE	LM104949	SKF INDUSTRIES PHILADELPHIA, PA.	
2		19	ROLLER BEARING CUP	LM104911	SKF INDUSTRIES PHILADELPHIA, PA	
1		20	BALL BEARING	KC045XPO	KAYDON MUSKEGON, MICH.	
2 1		21	SPUR GEAR	NSS 2020	BROWNING MFG MAYSVILLE, KY.	
2 1		22	SPUR GEAR (MODIFIED TO EXTEND OUTPUT SHAFT 1/2" AND MAKE IT SPLINED)	NSS 2080	BROWNING MFG MAYSVILLE, KY.	
1		23	GEARMOTOR	NSH-1105 MODEL 536	BODINE ELECT. CHICAGO, ILL.	
1		24	MACHINE SCREW JACTUATOR	CM-2500-6	DUFF-NORTON CHARLOTTE, N.C.	
1		25	RATIOMOTOR	CF31085J1ADUTF	BOSTON GEAR QUINCY, MASS.	
1		26	TORQUE-TENDER	TT 2, 50 17/64, 1/2" BORE	HELLAND MINNETONKA, MINN	
1		27	INFLATABLE SEAL	PRS 594	PRESRAY PAWLING, N.Y.	
2		28	O-RING			
1		29	BRAKE	MODEL NO SAB-63	SIMPLATROL PROD. FORMSPRAG CO.	
2		30	BEARING	67178 NR30210C	BOSTON GEAR QUINCY, MASS.	
1		31	CLUTCH AND FAILSAFE BRAKE ASSY			
5	1	32	COUPLING ASSEMBLY	SK-2-60026 PT NO 4		
4	1	33	PRESSURE SWITCH 14PSIG PNEUMATIC			
4	1	34	PRESSURE SWITCH 25PSIG PNEUMATIC			
4	1	35	VALVE, 2 POS, 2 WAY, SOLENOID, PNEU.			
4	1	36	REGULATOR, 100/25 PSIG PNEU			
3	6	37	VALVE, FLOW CONT, ADJUSTABLE W/BYPASS			
3	1	38	VALVE, 2 POS, 4 WAY, SOLENOID			
3	1	39	VALVE, PRESSURE RELIEF			
3	1	40	VALVE, 2 POS, 2 WAY, SOLENOID			
3	1	41	VALVE, PRESSURE REDUCING			
3	1	42	ACCUMULATOR, GAS CHARGED			

CALCULATED WEIGHT: 1062 lbs

DRAWING APPROVALS	DATE
APPD FOR QUALITY ASSURANCE	1/21/80
APPD	2/19/80
APPD	
APPD	
RESPONSIBLE ENGINEER	1/24/80
DRAFTING SUPV	
CHECKED	1/24/80
DRAWN L. TERLEY	1/24/80
CLASSIFICATION	BY

U. S. Department of Energy
Richland Operations Office
Rockwell Hanford Operations
Richland, Washington 99352
Nuclear Systems Associates, Inc.
Fullerton, California 92631

COUPLING MECHANISM-
MATERIAL ELEVATOR

PROTOTYPE WASTE RETRIEVAL SYSTEM

SCALE 1"=1'-0"

DRAWING NO. SK-2-60027 SHEET NO. 1 SHEETS 2

REFERENCE DRAWINGS

NEXT USED ON

REVISION APPROVALS

REVISIONS

COMMENT PRT ISSUE NO. DATE CHECK PRT ISSUE NO DATE

DRAWING STATUS

FIGURE 2-21. Coupling Mechanism.

2.7 MOBILE CONTROL TRAILER

The control trailer contains all the control consoles and associated instrumentation and control equipment necessary to remotely control the mining, removing, and container handling operations of the Prototype Waste Retrieval System. The trailer can be parked up to 600 ft from the retriever structure, located above and attached to the waste tank being emptied. The trailer will usually be outside the boundaries of the tank farm being worked on (Figure 2-22).

2.7.1 Control Systems

The various types of control systems employed in the PWRS are described with the equipment being controlled. Closed circuit television cameras and microphones in the retriever and tank provide visual and acoustical feedback to the operators in the control trailer. Any of the camera pictures can be switched to any of the five TV monitors provided in the trailer. In addition, numerous sensors provide status information that is presented in various displays and recorded.

2.7.2 Interlocks

An extensive interlock system is incorporated into the controls. By-passing of interlocks is permitted but only with administrative control. The administrative control is exercised by using key switches. Three levels of by-passing are permitted. Each higher level by-passes more interlocks but each requires a higher level of administrative permission.

2.7.3 Programmable Controller

The interlocking functions are accomplished in a programmable logic controller. All the control panel pushbuttons, equipment limit switches, some position transducers, and other equipment switches and sensors are wired to the logic input terminal of the controller. Most motor starter coils, relay coils, valve solenoids, and control panel indicator lights are connected to the controller output terminal. The outputs are energized or not depending on the logical determinations programmed into the

controller. The programmable controller is under the surveillance of the computer system but is independent of it and can operate even when the computer is not operating.

2.7.4 Graphic Displays

Visual feedback to the operator is not only provided by the TV systems but also by two graphic display units. One provides a plan view of the orientation of the articulated arm joints in the tank along with an indication of obstacles in the tank. The other is an elevation view that shows the relative positions of the articulated arm and the material elevator with respect to each other and the tank parts. These views are generated by the graphics system from information derived from the sensors on the equipment. The orientation of the replica arm can be superimposed on the plan view for synchronization purposes. The elevation view is used to monitor the folding and unfolding of joints during the entry and exit operations of the articulated arm from the tank.

2.7.5 Data Acquisition System

Routine sensor data from continuously operating systems on the retriever will be gathered and transmitted to the control trailer by a remote multiplexer located on the retriever. This data includes ventilation damper positions, air flows, differential pressures and temperatures, washing system pressures, temperatures and levels, tank exhaust air temperature, hydrogen concentration, and radiation levels. The sensors or local signal conditioners produce signals in the range of 0- to 10-V that are fed to the multiplexer. The multiplexer scanning, digitizing, and addressing are controlled by the system computer.

All the equipment position signals and some critical sensor signals and alarms are hard-wired back to the control trailer. The alarms include off-normal levels of radiation, hydrogen concentration, and temperatures. Vital analog signals are transmitted to the control trailer by four 20-mA current loop signals.

2.7.6 Computer Systems

The computer system controls the multiplexer but in addition checks the data, stores it, and prints out any off-normal conditions. All normal data is printed out at periodic intervals. The computer system also performs surveillance on the programmable controller and signals any apparent discrepancy in its operation.

The computer serves as an operational aid during the mining operations in the tank. It stores the tank obstacle information and provides the obstacle-free command to the articulated arm during its automatic operation.

The computer is also used as an operational aid in the sequential step operations. The step-by-step operating procedures are stored in the computer's memory. As each step is accomplished the computer checks that it has been performed. The computer system displays operating instructions for the operator; should the operator fail to respond, it flashes an overdue impending operation message and, through the programmable controller, causes the green light on the pushbutton next in sequence to flash. The computer system can also display procedures of alternate actions for recovery from abnormal conditions. As operating experience develops, the software will be modified to include the benefits of such experience.

2.7.7 Safety, Reliability, and Recovery

The instrumentation and control (I&C) system provides for and aids in utilization of the personnel and equipment safety features of the retrieval system. All important sensor data is, of course, available for alarming. The extensive interlocking system has been described.

Instrumentation and control component failure and the consequent mechanical overload and possible damage have been major considerations in the design of the system. The mechanical equipment generally has been designed for very rugged use and, therefore, extreme measures are not believed necessary. Double and triple redundancy of sensors has not

been employed generally although backups are designed into the system. For example, slip clutches are usually included in the directly driven systems such as the funnel's horizontal and vertical drives. If a failure of a limit switch or position sensor occurs no damage is done to the system when a mechanical stop is hit. On continuous drive equipment without mechanical stops (such as the turntable) slip clutches can be engaged. Correct positioning of equipment is important. For example, the turntable system has two sets of transducers and limit switches that indicate three stopping points, and a continuous position sensor. The output of the two sensor measurements is compared in the programmable controller. This simple redundancy along with observation by the operator prior to filling ensures that a shipping container is indeed in place in the filling room before dumping of material occurs.

Other mechanical safety features pertain to the hoist. All hoists (articulated arm, material elevator, and cranes) have conventional double braking and double cabling as required for nuclear facilities. The hoist cable for the articulated arm and material elevator hoists are hidden. Therefore, a single broken cable detection scheme is incorporated in each as one of the disabling interlocks.

To avoid lengthy shutdowns for maintenance to repair simple failures such as a single electrical wire breaking to an in-tank component, some redundancy has been included in the design. For example, each control valve on the articulated arm has a dual winding. The windings for each are brought up to the retriever in separate cables so that if one set of wires opens, operations can continue. Similarly, the position transducers on the articulated arm consist of two units--one coarse, one fine. The wires for each of these is brought up in separate cables. If either breaks, operations can continue. In cases where double wiring is used, each set is monitored. When a break occurs the problem is flagged.

Features for recovery of the articulated arm from the tank after a failure are included in the system. The hydraulic valve circuits for the hydraulic piston actuators that position the joints have additional valves in the circuit that route piston port lines to the return line. During operation these valves are energized and closed. If the main control valve fails, it usually will fail closed and trap fluid in the piston, locking it in place. In order to remove the articulated arm from the tank, each joint must be straightened out. Deenergizing the additional valves opens both piston ports through an orifice to the return line, allowing gravity to straighten the joint.

The various components of the system interface with each other to a large extent, but the systems have been designed to preserve independence and autonomy during failed conditions. For example, the computer is not essential to any operation. The equipment control system can be operated in a slightly restricted fashion. The features lacking would be those pertaining to obstacle avoidance and operator prompting. The data acqusition system would not be totally operable but all critical signals and alarms would be functional.

2.7.8 Maintenance Aspects

All retriever equipment controls can be put into a manual jogging mode to aid in maintenance and cleaning. In addition to all controls being in the control trailer, local controls are provided in the retriever as described in the equipment section.

2.7.9 Accessory Control

In addition to controls for all the mining and operating equipment in the retriever and in the tank, the control trailer has controls for all the accessory equipment in the retriever. These include controls for the ventilation system, the various doors between rooms, the lights, positioning of the TV cameras, heating in the retriever, etc.

2.7.10 Control Trailer Structure

The various control consoles are installed in a 12-foot wide by 45-foot long tractor trailer typically used by the military for electronic instruments and electrical repair shops. It is towed by a vehicle equipped with a fifth wheel, and capable of highway travel according to the Department of Motor Vehicles restrictions for wide loads. Heating and air conditioning for both personnel and equipment are attached to the trailer. Storage bins located under the trailer contain the various power and signal cables plus spare parts. Power control relays and distribution panels are located in the equipment storage room. Cables from the retriever and ventilation towers attach to the bulkhead connector panel on the right front of the trailer. Access to the control room is provided by two doors and a stairway. A double door is provided for installation and removal of equipment from the trailer.

Internal arrangement of the control trailer consoles are such to provide maintenance access to the rear of the control units and to the cable tray located below the floor. Most of the control panels are removed and installed from the front. Standard electronic rack and panel construction is utilized throughout the control trailer. The interconnection cables are located in the back of the consoles. Critical noise sensitive wiring is isolated and routed separately from the main wiring bundle.

NOTES: UNLESS OTHERWISE SPECIFIED

1. DESIGN AND FABRICATION TO BE IN ACCORDANCE WITH SPECIFICATION N79-028-5018.
2. DO NOT FAB FROM THIS DRAWING.
3. SEE DRAWING SK-2-60047 FOR CONTROL CONSOLE GENERAL ARRANGEMENT AND DESCRIPTION.

QTY		RPD	DESCRIPTION		MATL/REF
	X	1	CONTROL TRAILER ASSEMBLY		
	1	2	TRAILER		
	1	3	REPLICA ARM GRAPHIC DISPLAY CONTROL CONSOLE	SK-2-60035 PT. NO. 1	
	1	4	COMPUTER TERMINAL & DESK	SK-2-60036 PT. NO. 1	
	1	5	CCTV AND LIGHTING CONTROL CONSOLE	SK-2-60037 PT. NO. 1	
	1	6	CCTV AND LIGHTING CONTROL CONSOLE	SK-2-60037 PT. NO. 2	
	1	7	ARTICULATED ARM & TOOLS CONTROL CONSOLE	SK-2-60038 PT. NO. 1	
	1	8	ARTICULATED ARM CONTROL CONSOLE	SK-2-60039 PT. NO. 1	
	1	9	MATERIAL ELEVATOR CONTROL CONSOLE	SK-2-60039 PT. NO. 2	
	1	10	HETRENER GENERAL EQUIPMENT CONTROL CONSOLE	SK-2-60040 PT. NO. 1	
	1	11	VENTILATION SYSTEM CONTROL CONSOLE	SK-2-60043 PT. NO. 1	
	1	12	UTILITY CONTROL CONSOLE	SK-2-60044 PT. NO. 1	
		13			
		14			
		15			
	2	16	DESK		
	6	17	CHAIR		
	2	18	FILE CABINET		
	2	19	STAIRWAY		
		20			

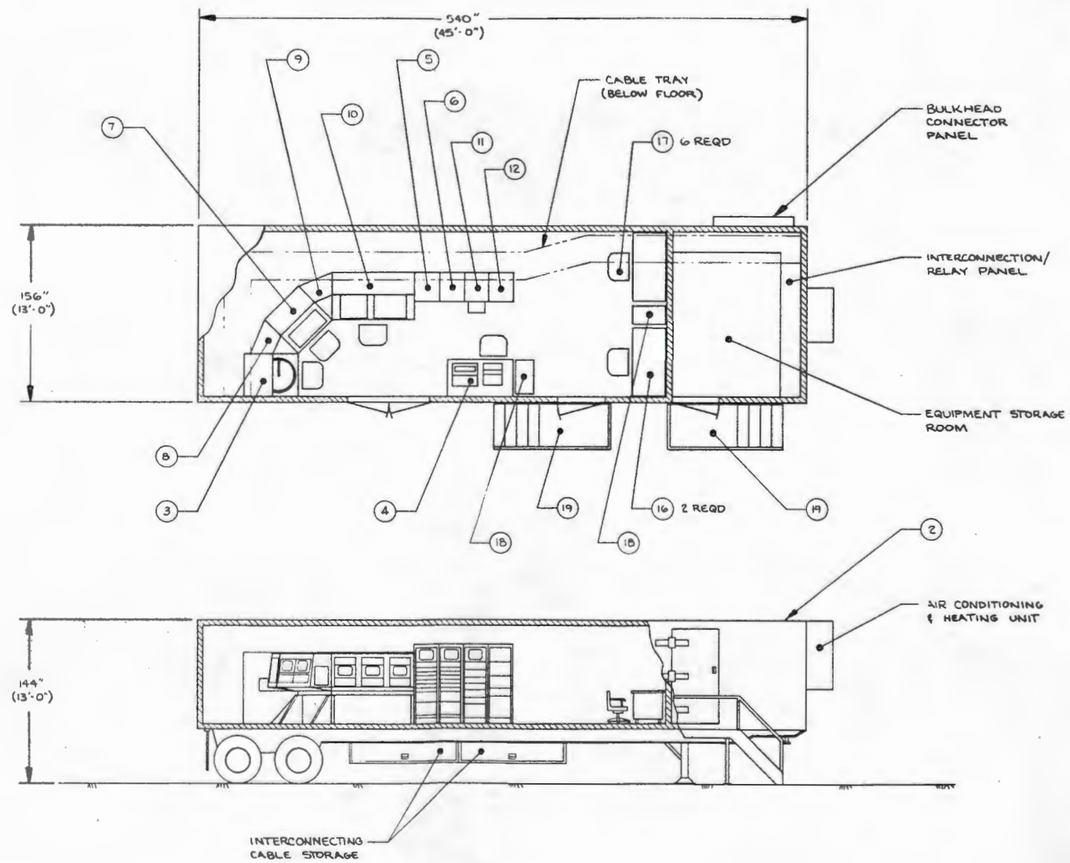

1 CONTROL TRAILER ASSEMBLY

DRAWING APPROVALS	DATE
QUALITY ASSURANCE	9/21/80
	9/4/80
RESPONSIBLE ENGINEER	9/11/80
	9/4/80
	9/4/80
DRAWN L. IERLEY	9/11/80
CLASSIFICATION	BY

U. S. Department of Energy
Richland Operations Office
Rockwell Hanford Operations
Richland, Washington 99352
Nuclear Systems Associates, Inc.
Fullerton, California 92631

CONTROL TRAILER

PROTOTYPE WASTE RETRIEVAL SYSTEM

SCALE 1/16" = 1'-0" | SHEET NO. 1 | SHEETS 1

DRAWING NO. SK-2-60032

REFERENCE DRAWINGS — NEXT USED ON

REVISION APPROVALS — REVISIONS — DRAWING STATUS

COMMENT PRT ISSUE NO. — CHECK PRT. ISSUE NO.

FIGURE 2-22. Control Trailer.

2.8 MOBILE AND SUPPORT SYSTEMS

2.8.1 Crawler-Transporter

The waste retriever is supported and transported to the various tanks by three crawler-transporters. Each transporter is connected to the retriever through a bolster assembly. There are three bolster design configurations permitting various degrees of freedom to prevent unwanted loads from being transmitted to the retriever structure. A jacking capability is provided on each of the transporters to provide vertical adjustment. An alignment and position control system is provided in each of the transporters so that each operator is fully aware and in command of the relative motion of the retriever and the transporter (Figure 2-23).

The crawler-transporter is a 400-ton capacity diesel self-powered track-type vehicle. A hydraulic jack system on each transporter is capable of raising the retriever approximately 16 inches. One transporter is also equipped with an auxiliary direct current generator and inverter to power the ventilation systems during relocation of the retriever to a new tank.

The bolster assemblies, designated A, B, and C, provide the following degrees of freedom:

A, B, and C: 360-degree rotation about the vertical Z-axis and a 7-1/2 degree gimbal-type movement provided by a ball-and-socket support that allows the floor of the retriever to tilt to accommodate travel over uneven terrain.

B: Lateral "float" of ±2 feet 6 inches in the X-Y plane.

C: Linear translation of ±1 foot 9 inches in the X direction.

Bolster A consists basically of a pressure-lubricated ball-and-socket assembly with the upper and lower portions attached to the structure and transporter, respectively. A resolver mounted adjacent to the ball is connected to the ball through a chain drive belt and transmits the angular rotation position to the position monitor control panel located in the transporter.

Bolster B provides only vertical support and normally does not provide any horizontal force to move the retriever. The ball connected to the retriever rests in a pressure-lubricated socket which is free to move laterally 2 feet 6 inches in any direction from center. An energy absorbing bumper (redwood) is provided around the perimeter of the bolster and is designed to absorb 10,000 foot/pounds of impact energy should the socket reach the maximum limits of travel. This feature reduces the impact loads being transmitted into the retriever structure. Two resolvers, X-axis and Y-axis, provide a graphical display of the socket position. The angular rotation position is also indicated on the control panel located in the transporter cab.

Bolster C is a pressurized ball-and-socket assembly mounted in a slide which provides ±1 foot 9 inches of lateral travel in the X-direction. Energy absorbing bumpers are located at the end of travel points. Two resolvers, X-plane and angular rotation, provide positional and rotational data to the position monitor control panel in the transporter cab.

Each of the three transporter crawlers uses a conventional set of controls for engaging and stopping each drive track and thereby running or turning the vehicle. The alignment and position control system has been added to aid the three operators in performing synchronized maneuvers. This system consists of the position transducers and their associated displays or indicators in the control panel. Each transporter control panel has a servo direction indicator that shows the heading of the transporter with respect to the retriever. The bolster positions are indicated on a light emitting diode (LED) single-axis display for bolster C and a two-axis LED display for bolster B.

Transporters A and B (corresponding to bolsters A and B) are equipped with mechanical followers that track a guiderail set up at the tank farm for alignment of the retriever. A position sensor measures the distance of each transporter (A and B) from the guiderail and that value is displayed to the driver. Each driver steers so as to put his indicator at center. In addition, drivers on transporters B and C steer so as to maintain their free travel indicators at mid-point. If any of the indicators reaches about 70% of its full travel, a panel light flashes and an audible alarm is sounded. If 90% is reached the throttles of all transporters are automatically shut down and the transporters are stopped. Overrides are provided to drive out of this condition.

Driving the transporters is a manual operation. There is only an automatic shut down in case the transporters are headed in such a way as to put large forces on the retriever structure. The energy absorbing bumpers and the structure, however, have been designed to take full thrust of the worst case (that is, transporter C continuing to travel at full speed with transporters A and B stopped) without damage. The energy absorbing bumpers, however, will become successively deformed with each impact, so such impacts are to be avoided.

Each transporter driver is to be equipped with a headset and microphone for constant communication with each other and with walkers who will provide additional guiding instructions.

2.8.2 In-Tank Viewing System

The in-tank viewing system consists of three separate free-standing enclosures, each containing a radiation hardened CCTV camera with zoom lens and two lights mounted on the bottom end of a telescoping tube assembly. The enclosures are located over 12-inch risers spaced at approximately 120-degree angles at a 26.5-foot radius from the waste tank center. Each enclosure consists of a square tabular framework structure with exterior aluminum siding. Each structure is approximately 5 feet 4 inches wide by 5 feet 4 inches deep by 30 feet high and is mounted on

a 12-foot-square concrete base. The upper four corners of the structure will be secured by cables to "deadman" anchors embedded in the ground. The cables prevent the structure from toppling during maximum wind conditions (Figures 2-24 and 2-25).

Each enclosure has a personnel access door for maintenance of TV camera, lights, hoist and cable takeup system. A wall-mounted ladder provides access to all of the equipment inside the enclosure. The enclosure is sealed around the riser to keep the interior at slightly below atmospheric pressure during its operation.

The TV camera and lights are attached to the bottom end of the innermost of the three telescoping square tubes. The vertical travel of these telescoping sections is approximately 44 feet. The camera can be lowered to within 13 feet 6 inches of the bottom of the tank and raised to a position inside the enclosure where it can be maintained or replaced. An electric-powered hoist is connected to the inner tube by a 1/4-inch-diameter steel cable.

The TV camera is mounted to a tilting mechanism to allow the camera to be tilted 120 degrees starting at 30 degrees above horizontal. An electric-driven pan motion unit enables the camera and light to rotate through 360 degrees for viewing all parts inside the waste tank.

Two 250W quartz halogen lights are used for illumination on each TV system. One right angle reflector light is mounted to the telescoping tube and one axial reflector light is mounted to the camera housing.

The electrical cable which provides power to the lights, tilt mechanism, zoom lens and camera, runs through the center of the three square telescoping tubes. The cable take-up system uses two idler and two 12-inch-diameter sheaves mounted near the top of the structure, and two lower 12-inch-diameter counter-weighted moving sheaves around which the cables pass to form a 4-part cable system. The lower sheaves move one-fourth the vertical travel distance of the camera, allowing the cable to be housed without the use of slip-rings.

A flange cover is provided to seal off the riser opening when the TV system is removed. A wall-mounted jib crane is used to remotely emplace the sealing flange cover.

Each of the TV positioner control panels controls two variable speed direct current motors for precise positioning of the cameras. For elevation and angular position of the camera a digital readout can be monitored on the TV positioning control panels.

2.8.3 Primary Ventilation System

The primary ventilation system is required to assure that the contaminated retriever atmosphere does not enter the environment and that operating personnel receive as-low-as-is-reasonably-achievable radiation exposure. This is accomplished by maintaining contaminated retriever rooms at slightly negative differential pressure and channeling flow from areas of least contamination to areas of greater contamination prior to exhausting it through a bank of filters to a stack. The system, consisting of redundant blowers, filters, and radiation monitoring instruments, coupled with the secondary systems onboard the retriever, provides contamination protection for operating and maintenance personnel and the environment. The entire ventilation system is monitored and controlled automatically from the control trailer.

The primary ventilation system is a module mounted on a skid. Its two separate redundant circuits include moisture separators, 5-micron prefilters, 0.3-micron HEPA filters, activated charcoal filters, 2600 cfm capacity blowers, and monitoring and control equipment. The module weighs approximately 4500 lbs and has overall dimensions of 21 feet in length by 6 feet in width by 5 feet 6 inches in height. A 12-inch-diameter flexible inlet duct connects the module inlet to a 12-inch waste tank riser. On the outlet end of the module a 12-inch-diameter flexible duct is connected to the retriever stack. This system takes incoming fresh outside air and preheats it to a temperature of 52°F to prevent freezing and condensing of water. The air initially enters the air lock room and is diverted to the other rooms in the retriever to

allow for clean air to flow from the least contaminated area to the most contaminated area. The air leaves the retriever and enters the waste tank via the 42-inch risers. The air then leaves the waste tank through the 12-inch riser. It passes through the filters and is exhausted to the stack.

2.8.4 Standby Power System

The standby power system consists of a diesel generator and an uninterruptible power supply mounted on a semitrailer. An enclosure over the diesel and power supply provides protection from weather conditions.

A 2400-V, 500-kVA diesel generator provides emergency power to the retriever in case site power is lost. Its main purpose is to keep the ventilation system operational. Since the ventilation system has the largest power consumption, mainly because of its heaters, the diesel has been sized large enough to operate not only the ventilation system but the entire retriever system in near normal manner.

The diesel can be started and take on full load in about 10 seconds. However, if a problem is encountered in starting the diesel, it is expected that a diesel from another retriever can be transported and started within 30 minutes. To provide power to critical loads during the period before a diesel generator is running, an uninterruptible 120-V, 60-Hz, 30-kVA power supply is provided. It consists of a bank of batteries, a rectifier system for charging the batteries, and an inverter for converting direct current battery power to alternating current. The uninterruptible power supply takes over in about 4 milliseconds and will supply power to the computer system, the communications systems, emergency lighting, radiation monitors and some ventilation. (It cannot provide full normal ventilation.) The uninterruptible power system is sized to provide this emergency power up to 30 minutes.

While the retriever is being relocated by the crawler transporters and the 2400-V site power is disconnected, some electric power is required on the retriever to run an auxiliary ventilation blower and to

provide heat and some lighting. The blower keeps air circulating inside the retriever in the same direction as the normal ventilation system. Otherwise, back currents might dislodge contaminated dust. The heat is required to prevent any water left in the system from freezing. The power is derived from a static inverter connected to a direct current generator driven by the diesel engine of one of the transporters.

NOTES: UNLESS OTHERWISE SPECIFIED

1. THIS DRAWING IS NOT TO BE USED FOR FABRICATION
2. DESIGN AND PERFORMANCE REQUIREMENTS TO BE IN ACCORDANCE WITH SPECIFICATION N79-028-521.

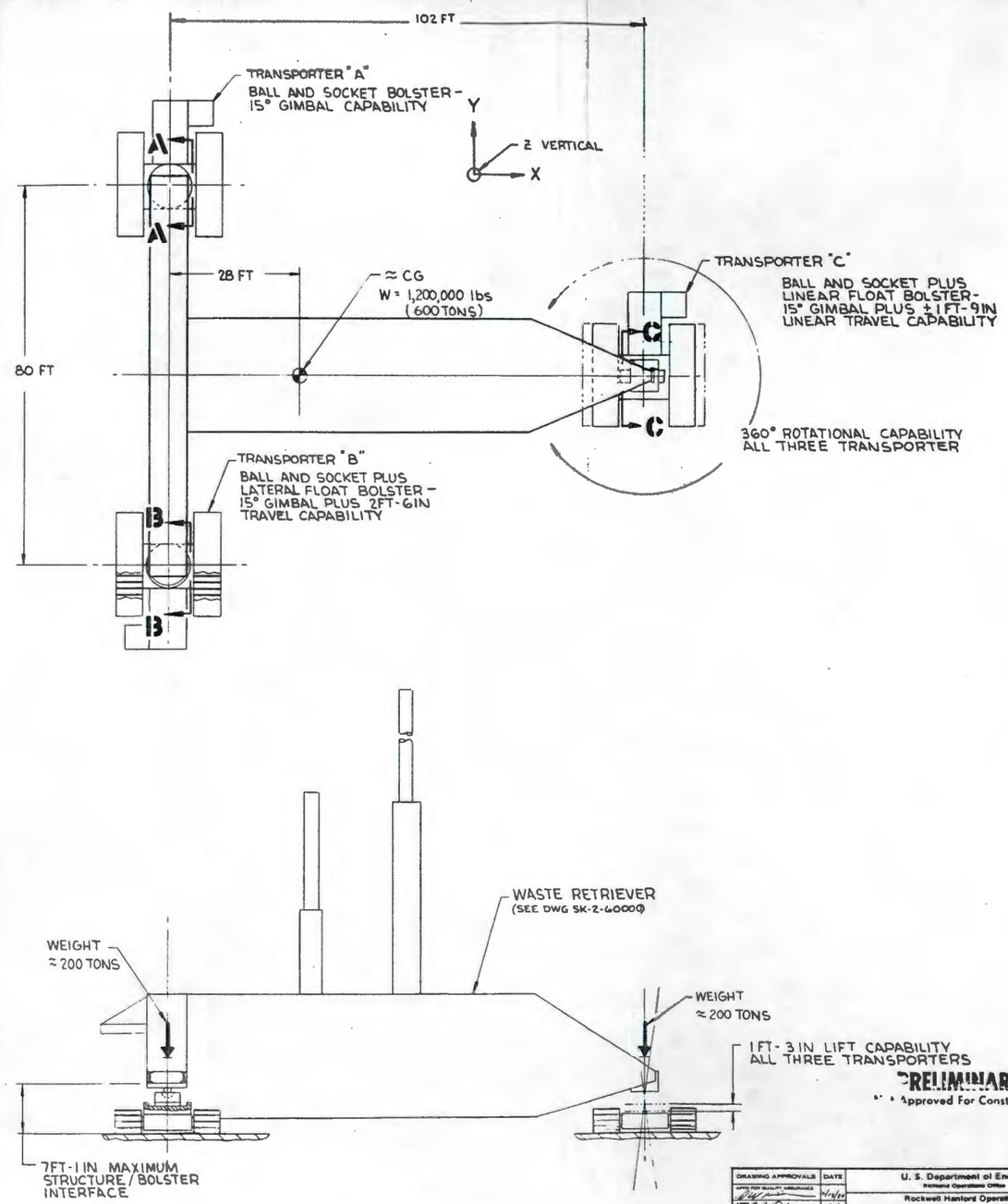

FIGURE 2-23. Crawler-Transporter Arrangement.

NOTES:
1. TOTAL CALCULATED WEIGHT PT 1 ASSY 4170 LB.
2. DESIGN & FABRICATION TO BE IN ACCORDANCE WITH SPECIFICATION NO. N79-028-507.
3. DO NOT FABRICATE FROM THIS DRAWING

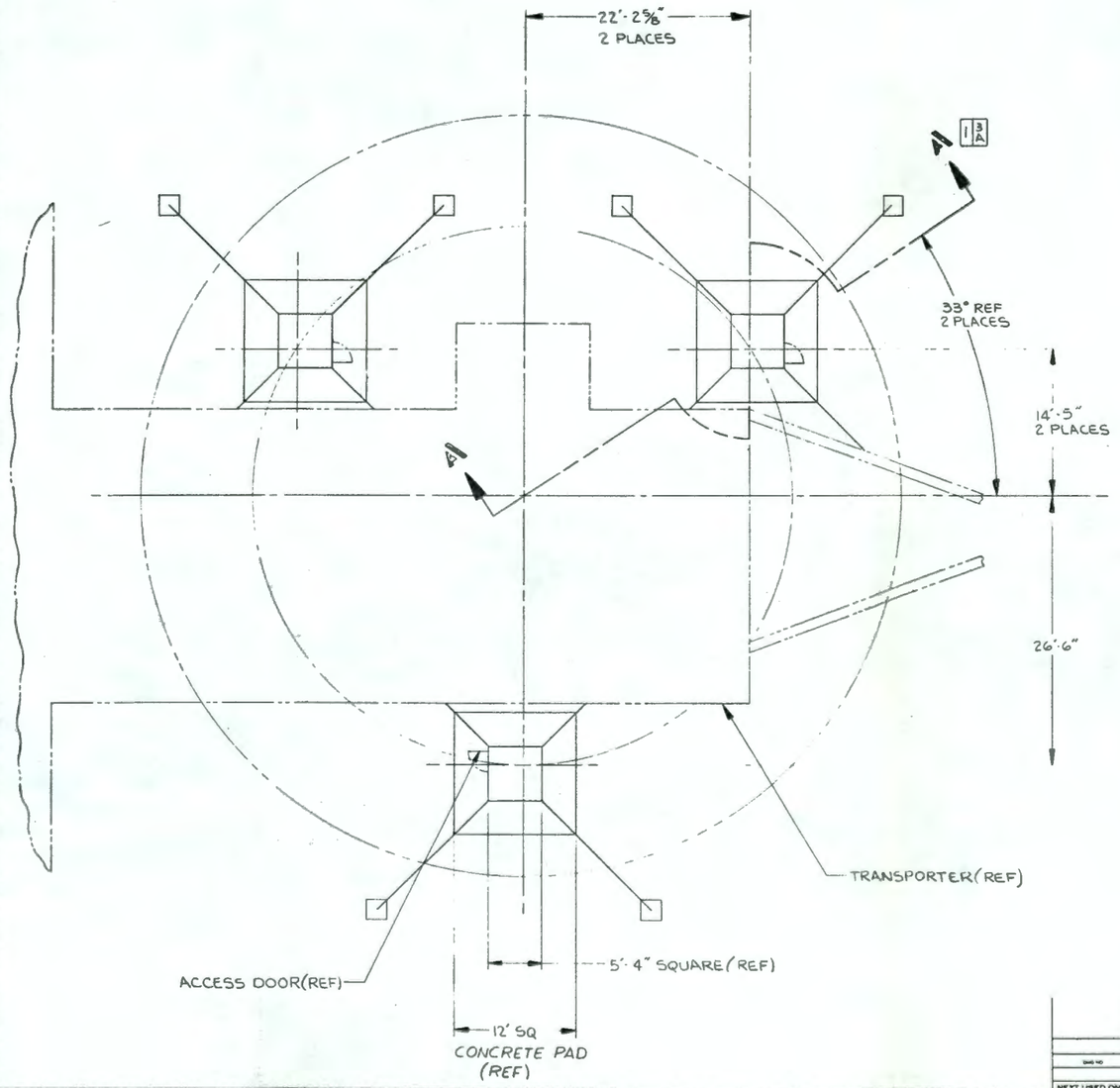

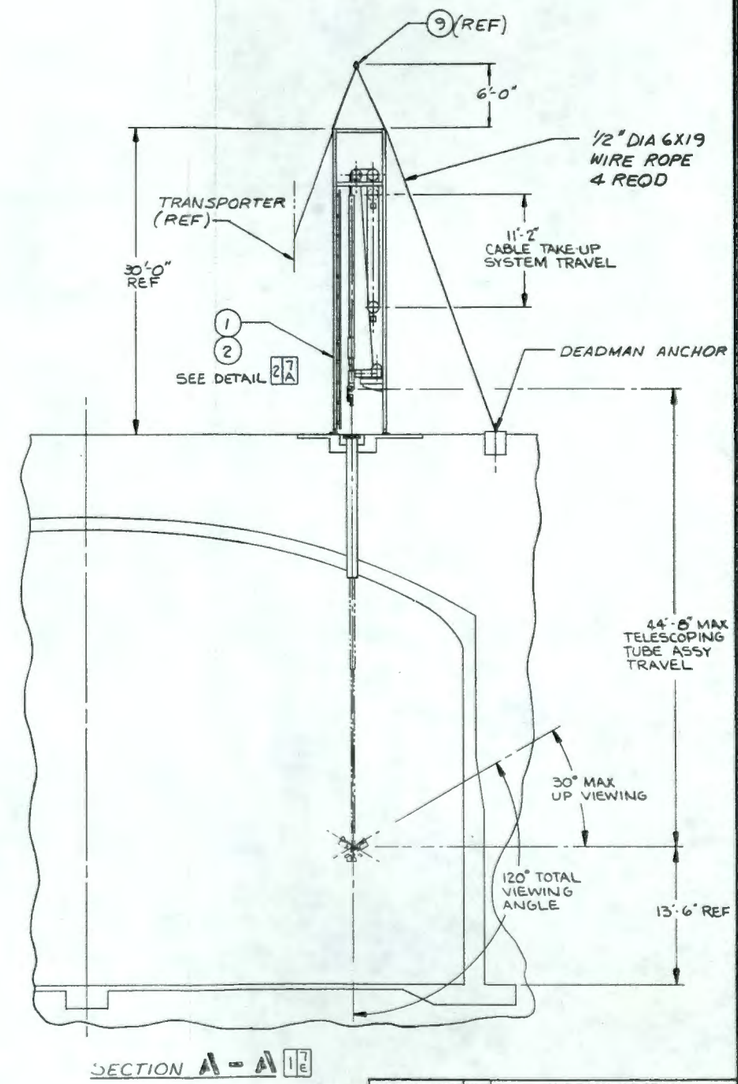

DRAWING APPROVALS	DATE	U. S. Department of Energy Richland Operations Office
APPD FOR QUALITY ASSURANCE	4/9/79	Rockwell Hanford Operations Richland, Washington 99352
APPD	4/9/79	Nuclear Systems Associates, Inc. Pittsburg, California 94565
APPD		IN-TANK CCTV VIEWING LIGHTING SYSTEM
DESIGN LEAD ENGINEER DRAFTING APPD	4/9/79	PROTOTYPE WASTE RETRIEVAL SYSTEM
CHECKED L. IERLEY	4/9/79	SCALE 3/16"=1'0" DRAWING NO SK-2-60017 SHEET 1 OF 5

REFERENCE DRAWINGS — NEXT USED ON

REVISIONS — REVISION APPROVALS: QUALITY ASSURANCE, RESPONSIBLE ENGINEER, DRAFTING, CHKD BY DATE, REV BY DATE — DESCRIPTION — REV NO — LAST REV

COMMENT PRT ISSUE NO — DATE — CHECK PRT ISSUE NO — DATE — DRAWING STATUS

FIGURE 2-24. In-Tank Viewing and Lighting System.

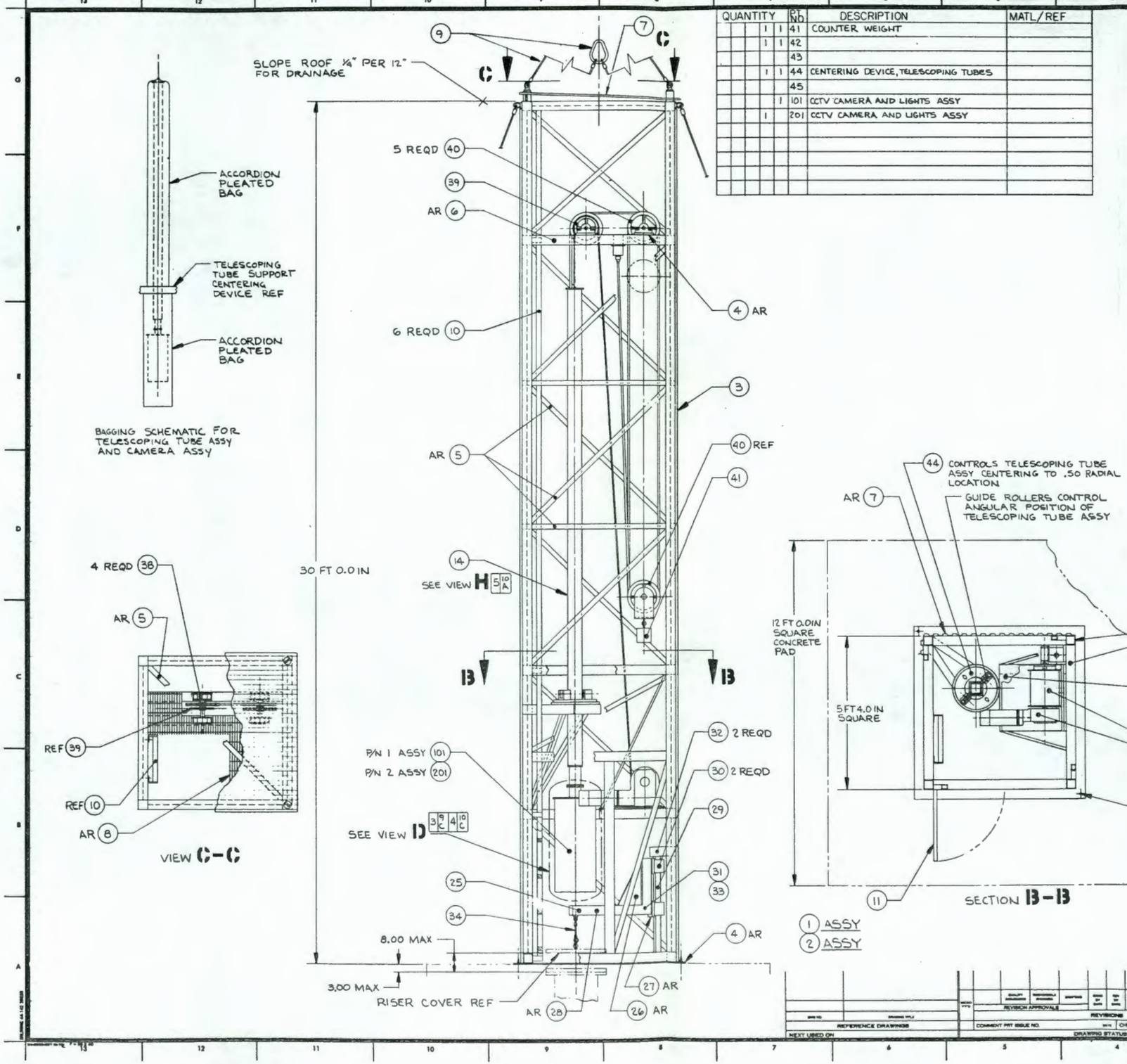

QUANTITY					PT NO	DESCRIPTION	MATL/REF
			1	1	41	COUNTER WEIGHT	
			1	1	42		
					43		
			1	1	44	CENTERING DEVICE, TELESCOPING TUBES	
					45		
				1	101	CCTV CAMERA AND LIGHTS ASSY	
			1		201	CCTV CAMERA AND LIGHTS ASSY	

QUANTITY					PT NO	DESCRIPTION	MATL/REF
				X	1	ASSY	
			X		2	ASSY	
		X	1	1	3	STRUCTURE ASSY	
	AR				4	PLATE, ½" THK	ASTM-A36 C.S.
	AR				5	TUBE, 2" SQ x 1/16" THK WALL	ASTM-A500 GR B, C.S.
	AR				6	TUBE, 4" SQ x 1/8" THK WALL	ASTM-A500 GR B, C.S.
	AR				7	SIDING & ROOFING, .040 THK 4" PITCH	ASTM-B209 ALCLAD 3003, AL.
	AR				8	GRATING, ALUMINUM I-BAR 6878T17	McMASTER-CARR LOS ANGELES, CA.
	1				9	WIRE ROPE SLING, STANDARD CONSTRUCTION, TYPE B1-4, 3/8" DIA x 7FT LONG WITH SHACKLE & THIMBLE END FITTINGS	BROOKRICK & BOLSON INC. ST. LOUIS, MO.
	6				10	LADDER, 5 FT SECTION 7988T14	McMASTER-CARR LOS ANGELES, CA.
	1				11	DOOR, STEEL - 2'6" x 6'8"	
					12		
					13		
X			1	1	14	TELESCOPING TUBE ASSY	
AR					15	PLATE, 3/16" THK	ASTM-A36 C.S.
AR					16	PLATE, ¼" THK	ASTM-A36 C.S.
AR					17	PLATE, 3/8" THK	ASTM-A36 C.S.
AR					18	TUBE, 4" SQ x 1/8" THK WALL	ASTM-A500 GR B, C.S.
AR					19	TUBE, 5" SQ x 3/16" THK WALL	ASTM-A500 GR B, C.S.
AR					20	TUBE, 6" SQ x 3/16" THK WALL	ASTM-A500 GR B, C.S.
16					21	BALL TRANSFER BEARINGS P/N. 4271-32	GENERAL BEARING WEST NYACK, N.Y.
2					22	LIMIT STOP, LINEAR TRAVEL	
					23		
					24		
X			1	1	25	JIB CRANE ASSY	
AR					26	PLATE, 3/16" THK	ASTM-A36 C.S.
AR					27	PLATE, ½" THK	ASTM-A36 C.S.
AR					28	TUBE, 4" SQ x 1/8" THK WALL	ASTM-A500 GR B, C.S.
1					29	BEARING SHAFT, 2.48" SQ P/N SHG2500	TURNOMAT ROCHESTER, N.Y.
2					30	BEARING, LINEAR P/N BUS 2500	TURNOMAT ROCHESTER, N.Y.
1					31	LINEAR ACTUATOR P/N DCA-5PMA 8" STROKE	WARNER ELECTRIC BELOIT, WI.
2					32	SUPPORT BEARING ASSY	
1					33	ROTATION DRIVE MOTOR & GEAR REDUCER P/N FNA 3134, 112001 RATIO WITH 3/8 BF INSTA	BOSTON GEAR QUINCY, MASS.
1					34	WIRE ROPE SLING, STANDARD CONSTRUCTION, TYPE B1-AA, 3/8" DIA x 10' LG WITH SHACKLE AND END FITTINGS	BROOKRICK & BOLSON INC. ST. LOUIS, MO.
					35		
					36		
			1	1	37	WORM DRIVE HOIST P/N WD-908	DUFF-NORTON CHARLOTTE, N.C.
			4	4	38	PILLOW BLOCK P/N 06866-8H	BOSTON GEAR QUINCY, MASS.
			1	1	39	SHEAVE, WIRE ROPE P/N 10-10	McKISSICK, CROSBY GROUP TULSA, OKLA.
			5	5	40	SHEAVE, TV & ELECTRIC CABLE P/N 14-1	McKISSICK, CROSBY GROUP TULSA, OKLA.

DRAWING APPROVALS	DATE	U. S. Department of Energy Richland Operations Office	
		Rockwell Hanford Operations Richland, Washington 99352	
		Nuclear Systems Associates, Inc. Fullerton, California 92631	
		IN-TANK CCTV VIEWING AND LIGHTING SYSTEM	
		PROTOTYPE WASTE RETRIEVAL SYSTEM	
L. IERLEY		3/4" = 1'0"	SK-2-60017

FIGURE 2-25. Viewing System Enclosure.

3.0 POTENTIAL APPLICATIONS OF HANFORD MECHANICAL RETRIEVAL TECHNOLOGY

The intent of the Hanford retrieval system development described herein is in accordance with the national plan for full retrieval, processing, and transfer of immobilized waste to to a federal repository (Figure 1-6). The favorable Hanford 200 Area geography, topography, geology, hydrology, and climate offer the potential opportunity for in situ disposal. As public and environmental safety criteria are developed, it may be found possible to entomb and leave the solid HLW in Hanford tanks *as is* at substantially reduced cost.

However, it is quite possible that in situ disposal may require partial or fairly complete immobilization of interstitial liquor, semi-fluid sludges, and soluble salts. Partial in situ immobilization may be accomplished within the tanks using the retriever described herein. All known low temperature immobilizing agents would require approximately a 2 to 1 ratio of immobilizing agent to raw waste volume. Some tanks are nearly full, while others are nearly empty. Effective mixing of any immobilizing agent with raw waste will require mining raw waste from full tanks and redistributing it to nearly empty tanks. Total solid waste inventory is about one third of total tank capacity. The effectiveness of mechanical mixing in-tank, around obstructions and to the top, will clearly be limited. The immobilization achieved is also limited by raw waste chemistry, such as sodium, organic complexant content, etc.

Potentially satisfactory immobilization of in-tank HLW for in situ disposal might be achieved by immobilizing the waste external to the tanks (Figure 3-1). Here the sludge may be washed of salts, organic complexants may be removed, good mixing and blending may be achieved and a quality immobilization agent such as the supergroup type cements may be mixed and returned to the tanks for in situ disposal of solid HLW. A specially designed "bucket" tool for the articulated mining boom of the retriever might replace up to 9 ft^3 per bucketload (1/3 yd^3 concrete) or about 7 yd^3/hr.

This intermediate version of in situ disposal has higher probability of meeting public and environmental safety criteria at costs still substantially reduced from the baseline geologic disposal plans.

Consequently, the probability of applying Hanford retriever technology remains high when considering all possible waste disposal plans. The development plan described herein specifically attempts to minimize development costs prior to the 1985 leave-or-retrieve decision date. In order to provide credibility to a leave-or-retrieve decision, and to meet the 1995-1996 date for planned implementation of Hanford HLW disposal, substantial development and demonstration must be achieved by 1985.

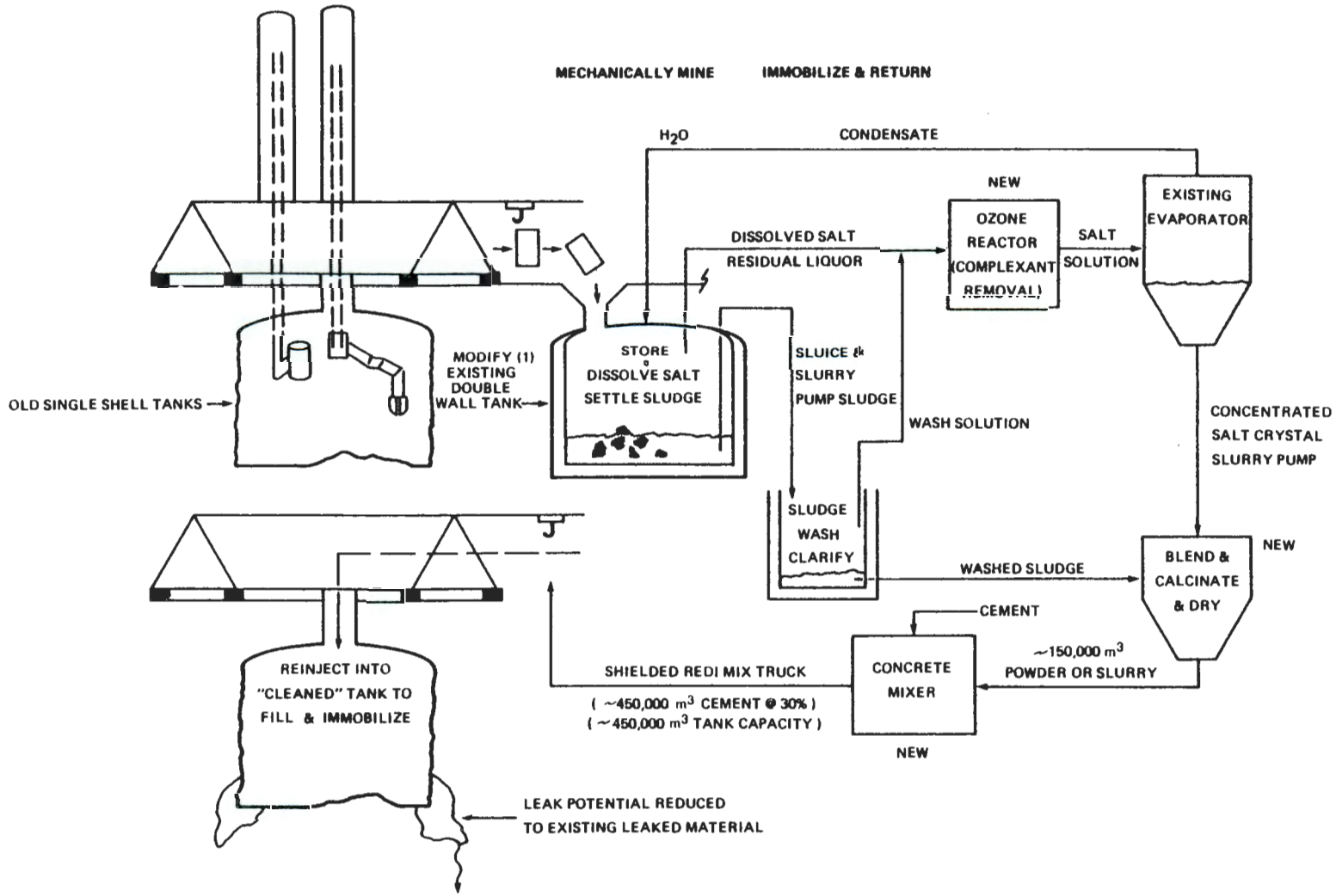

FIGURE 3-1. A Possible Retrieval, Immobilization and In Situ Disposal Scheme for Hanford HLW.

4.0 DESIGN ASSESSMENT DEVELOPMENT PLAN AND SCHEDULE

4.1 DESIGN ASSESSMENT

The reference preliminary design described herein summarizes the design work conducted from February 1979 to March 1980 by Rockwell Hanford Operations and its subcontractor, Nuclear Systems Associated, Inc., Brea, California. The preliminary design includes 122 component, assembly and structural, layout and schematic drawings.

Subsystem engineering packages containing criteria, static calculations and specification outlines were prepared. This preliminary design will serve as the baseline design for further development and incorporation of advanced criteria and retrieval equipment test and evaluation information.

As development progresses, the baseline design will be maintained and updated to ensure configuration control and ultimate component and subsystem integration into a successful prototype system.

The system is conceived and designed to integrate current principles into a complex system to accomplish a unique and versatile set of tasks.

4.1.1 Highlights of the Engineering Design

The engineering design effort has accomplished its goal of defining the PWRS in sufficient detail so that any or all elements of the system can be detail designed, and fabricated with assurance that they will fit and function within the allotted space. All features and functions of the conceptual design have been retained although many appear different because of refinement. The following are some of the more notable accomplishments of the engineering design.

- Turntable Sealing. A solution was found to the problem of sealing the turntable which transfers the shipping containers between the clean shipping and receiving room and the contaminated filling room. The solution was to enclose the entire turntable with only two hatch access points and to expose only the top of the container to the contaminated atmosphere by the

use of inflatable seals. Full scale testing is necessary to establish the adequacy of this solution. Protection from wear and abrasion must be evaluated, and a reliable method developed to detect a failed seal.

- Articulated Arm. The arrangement of the articulated arm was completed. Its parts and components were sized and fitted into the confined space available. Provision has been made for the hydraulic, pneumatic and electrical piping and cables. The adapter provides the capability of interchanging tools. Although all of the components and materials of the arm are being used in industry today, an extensive development and testing program is required to achieve the necessary reliability and maintainability, and to integrate it with the remote controls. The proving of the articulated arms ability is of top priority because of the severity of its service requirements and the dependence of the rest of the system on it.

- Mining Tools. Preliminary design for six tools are completed. These first-generation designs will require extensive development, testing, and demonstration evaluation. New designs may also be required to mine all of the varied wastes that will exist at the time of retrieval operations.

- Material Elevator Bucket. The bucket has changed from a bottom dumping one in the conceptual design to a pivot-and-tilt dumping arrangement. This arrangement has the advantage of holding fluid and fine material better, of reducing the chance of material becoming lodged in the bucket because it is being dumped out the same opening it is put in, and providing better access for filling in the tank by the mining boom. The reliability and maintainability of its drive mechanism need to be proven.

- Tool Change Machine. The capability to change tools remotely on the distal end of the articulated arm needs to be developed. The engineering design provides an arrangement of components for a tool change. Development testing of the change machine and the various tools is required to provide the needed reliability. It is ready for detail design, fabrication, and testing.

- Controls. A major continuing effort is required to develop the software and refine the controls of the system. The engineering design has provided the basic philosophy and one-line schematic drawings for the controls but details of the logic and circuits need to be developed in the next phase.

Many components of the PWRS have already been proven and thus will not need development. Items such as the crawler-transporters, the waste transfer vehicle, the overall structure, the stand-by generator, the cranes, hoists, and the monitors and alarms need only to be integrated into the overall system. Other elements of the system, such as remote viewing and lighting, ventilation, and wash systems will require testing for adequacy and optimum placement or performance.

4.1.2 Review of Design Concept

Review of the design concept to date reveals the following favorable conclusions:

1. The overall design concept is capable, upon completion of engineering and development, of satisfying the identified design criteria.

2. The system, as conceived, is capable of accomplishing tasks required for retrieval of in-tank wastes. It may also become a basic tool for implementing tank decommissioning and decontamination.

3. All aspects of the design are based upon current materials and engineering principles.

4. The design, with minimal departure, will serve as a basis for completion of development.

The existing design provides the basis for the required additional detailed work in the following overall areas.

1. Component and subsystem interfaces and individual performance, reliability, and quality criteria remain to be identified, determined and specified.
2. Detailed analysis, planning and possible redesigning for expeditious component decontamination is needed.
3. Considerable testing of methods and types of nozzles for the wash systems is envisioned.
4. Remote maintenance and repair of equipment in the filling and mining rooms requires definition and demonstration.
5. A formal program for reliability analysis, failure modes and effects analysis, system failure diagnosis, and failure response plans must be developed and implemented to guide developmental design, fabrication, testing and the evaluation program.
6. The following tasks remain to be completed before the experimental prototype subsystem elements can be built and tested:
   - configuration management plan
   - drawing trees
   - specifications tree
   - parts lists
   - quality assurance program criteria and implementation plans
   - final design criteria, and
   - fabrication and procurement plans.
7. Design, development, fabrication, and testing costs are being estimated.

8. Final operational system procurements, waste retrieval operating costs, retrieval system performance and availability determinations are the major objectives of the planned development program.

Immediate aspects of the design that require further design and development are:

1. Detail review, mock-up, and full-scale system testing of the hydraulic subsystem dynamics, as related to the articulated arm, material elevator, hoists and hose slack control systems. Of specific concern is elimination of hydraulic shocks and induced vibrations caused by pressure surges in the actuator and return to tank lines in the flex joints and hose sections. The complexity of the system defies satisfactory analysis currently and requires system assembly, testing and modification.

2. Integration of the electro-mechanical remote sensing and automatic control valves, actuators, shock absorbers and accumulators. Simulated systems must be subjected to plausible operating and failure conditions prior to full-scale prototype system operation.

3. Specifications for in-tank contaminated equipment welding surface finishes, fillet requirements, crack and porosity control, and chemical resistance to corrosion, and attack from in-tank salts and decontamination chemicals.

4. Further work on the CCTV system to provide suitable viewing for boom tool spatial placement relative to excavation or cutting location. Design review reveals that at least better lighting and larger lens apertures than currently planned are required. Actual testing of a full-scale working model is required to determine the combination of equipment and techniques needed to accomplish the tasks in a cost-effective and safe manner.

5. The economics requiring high system availability also requires further design of failure-prone elements for quick remote removal and replacement. Further modularization is possible and will be examined for incorporation into the baseline design. A typical candidate assembly is the hydraulic actuator, shock absorber, control valve, interconnecting line, electrical connections, position sensors-encoders and limit switches of each segment of the articulated arm.

6. The bucket-tilt mechanism of the material removal subsystem has a high reliability rating. However, if or when it fails it could be very difficult to replace or repair. Evaluation and comparison to other methods of bucket-tilt or modularization of the present system for easier access and replacement are required. Determination will be resolved by hands-on experience with developmental hardware.

7. The retriever system structure and room layouts appear to be generally adequate. Detailed review indicates that maintenance will be facilitated with 2 feet more head room in the structure. Manipulators are available in each contaminated area for equipment maintenance. Further remote maintenance time and availability studies may well suggest that all major contaminated assemblies should be easily removable and replaceable for external decontamination and maintenance. Some structure modifications may be desirable to facilitate articulated arm segment or elevator bucket removal.

Because of these considerations the articulated mining boom subsystem, the material removal subsystem and the controls will be designed, developed, and functionally tested prior to fabrication of the prototype retriever structure.

4.2 DEVELOPMENT PLAN AND SCHEDULE

The development plan approach is to address initial development efforts toward those more unique and complex subsystems that require extensive modeling, breadboarding,* functional testing, development, integration, feedback assessment, and qualification. This activity will be undertaken immediately. It will be conducted while awaiting prototype component and subsystem test facility construction. (Project B-227 Engineering Development Facility and Mock Waste Tank.) The advanced development task will use a near one-third scale working model of the articulated mining boom. The model mining boom and its hydraulics will be coupled initially to the manually operated remote breadboard control system. Following functional testing, the control system will be expanded to include the replica arm. Development of failure diagnosis techniques will be a major objective of the breadboard test program. Thus, functional testing of the mining boom control scheme can be completed by the time the full scale experimental prototype mining boom control system is assembled. See Figure 4-1, Retrieval Development Schedule.

The basic mining tool controls can be breadboarded and functionally tested with the hydraulic actuators of the mining tools in a bench test stand concurrently but lagging the articulated arm model-control testing. Model and control testing will begin early in FY 1982 (Figure 4-1).

Final design and fabrication of the experimental prototype full scale mining boom subsystem, including its telescoping tube elevator assembly, will proceed during model and breadboard functional testing. The experimental prototype mining boom will also incorporate quick remote component replacement capabilities for remote maintenance assessment. Current plans call for installation of the experimental prototype mining boom assembly and controls on a test stand suspended over the Mock Waste Tank associated with Project B-227 Engineering Development Facility planned for FY 1982. The test stand will simulate structure and arrangements of the prototype

---

*Breadboarding, i.e., control components and simulated components arranged in a flexible manner to provide for ease of circuit change and component replacement.

retriever structure. Installation is planned during the last half of FY 1983. Functional startup testing will commence in early 1984. Functional testing will be followed by the detailed development test program. The experimental mining boom test program will include mining tool functional integration, mining and cutting operation tests, remote tool changing tests, remote servicing and maintenance tests, failure diagnosis, system simplification, determination of limit switch, position encoder adequacies, etc.

The waste material removal subsystem and the replica arm-computer integrated control system design, fabrication, installation, and startup will follow the experimental prototype mining boom system by about one year in design and about 1-1/2 years for startup.

Integrated subsystem testing of the basic mining subsystems commence in early 1986. This testing will incorporate all functions of the mining boom subsystem and the material removal subsystem, including the integrated control systems. Upon completion of integration tests, the system will actually mine and remove debris and simulated waste material from the Mock Waste Tank. Projected waste removal rates and efficiencies will be verified and reliability demonstrated and the various mining boom tools will be available for demonstration. Addition of the tool changing machine and remote maintenance equipment to the test stand will permit demonstration of the serviceability and projected availability of the key elements of the total retriever system. Approximately 1-1/2 years of integrated subsystem testing will be completed by mid-FY-1987 when request for authorization for FY-1989 Line Items must be made for a 1996 retrieval operations startup.

The final design phase of the prototype retriever structure and its ancillary equipment will follow the material removal system by 14 months. The mobile prototype retriever structure and equipment will become available for installation of mining and material removal subsystems in 1988. Total mobile prototype retriever integration and shakedown will be completed by early FY-1990. Final proof "hot" tank demonstration will commence in FY-1990, at the time Title II design commences for the operational retrievers. (See Figure 4-2, Master Program Schedule.)

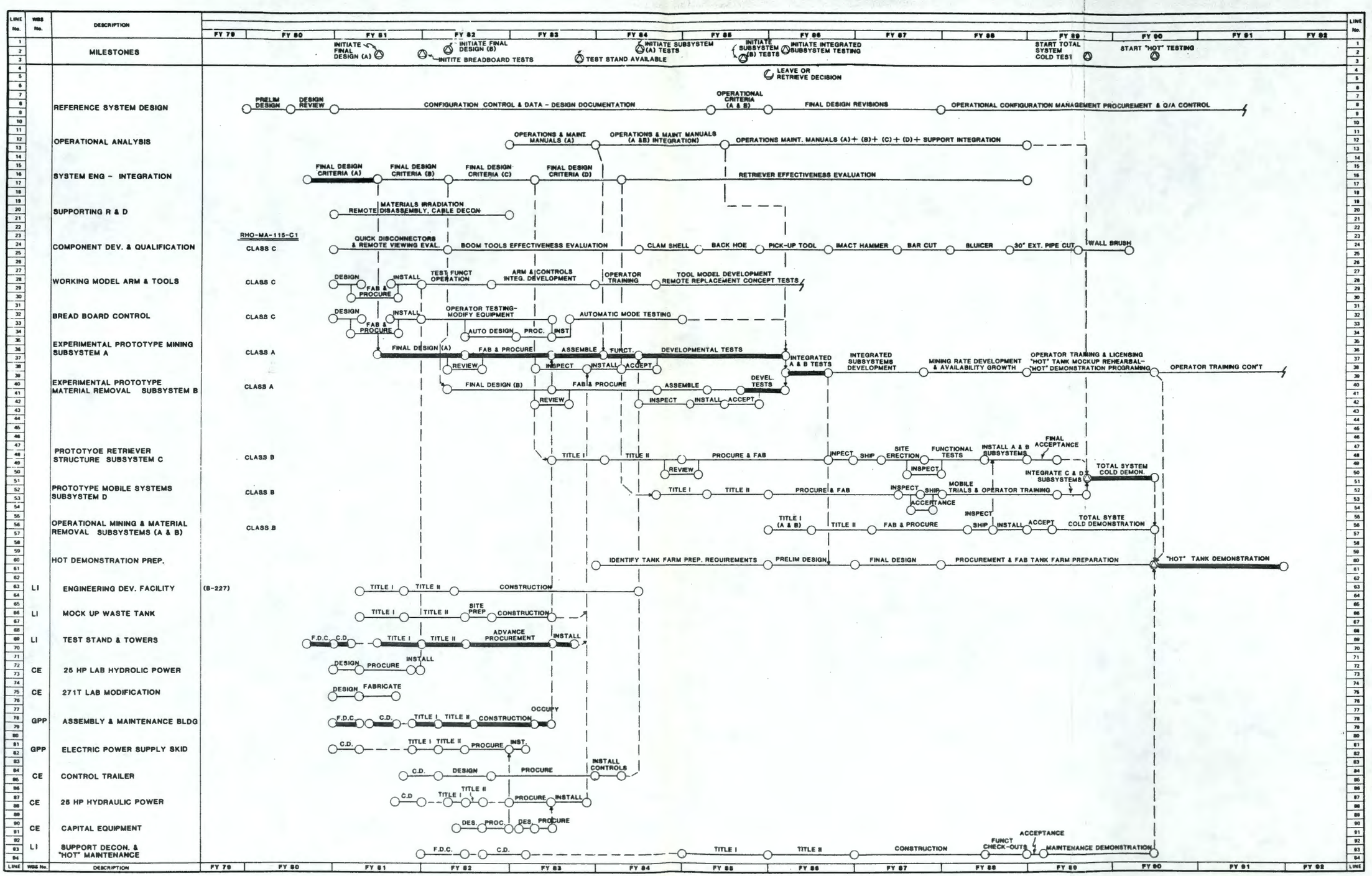

FIGURE 4-1. Retrieval Development Schedule.

4-9/4-10 blank

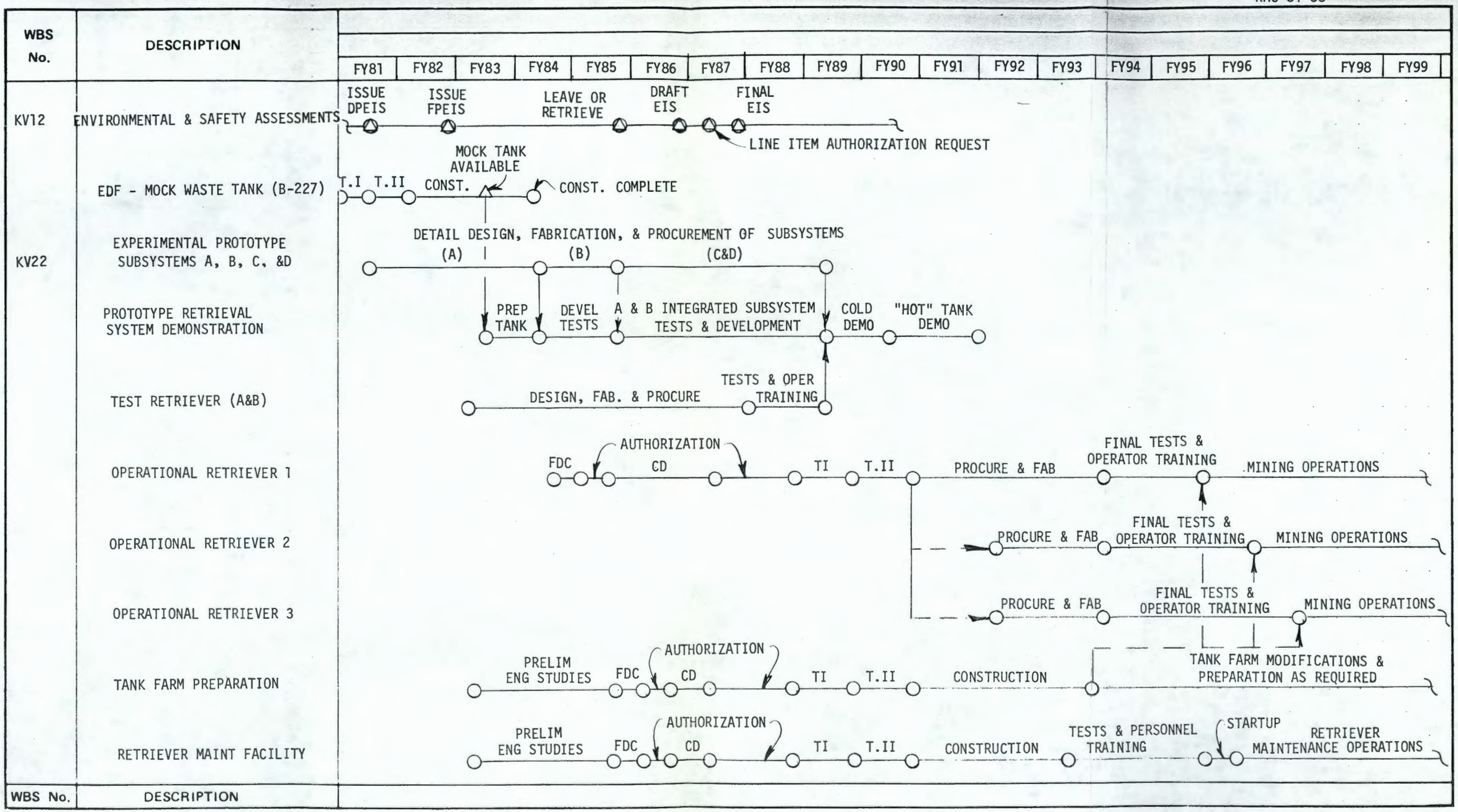

FIGURE 4-2. Master Program Schedule.

5.0 REFERENCES

1. Nuclear Waste Management Summary Program Document FY-1980, DOE/ET-0094, April 1979.

2. Strategy Document, Long-Term High-Level Waste Technology Program, DOE/SR-WM-79-3, December 1979.

3. Report to the President by the Interagency Review Group on Nuclear Waste Management, Washington, D.C., TID-29442, March 1979.

4. U.S. Energy Research and Development Administration, Alternatives for Long-Term Management of Defense High-Level Radioactive Wastes, Hanford Reservation, Richland, Washington, ERDA 77-44, September 1977.

5. A Technical Report on the Environmental Aspects of Long-Term Management of High-Level Defense Waste at the Hanford Site, Richland, Washington, June 1980.

6. Prototype Waste Retrieval System, Conceptual Design Final Report, ARH-C-20, Richland, Washington, May 1977.

7. Kaiser Engineers, KE Report 77-09-RE, volumes 1 and 2, Hanford Defense High-Level Waste Management Studies, Richland, Washington, September 1977.

APPENDIX

Table A-1 provides estimates of the liquid, sludge and salt cake volume distribution among 169 Hanford underground high-level waste storage tanks. Table A-1 also indicates which tanks are known leakers and tank status. Table A-2 lists by tank farm the range of content volumes, thermal problems and number of tanks of questionable integrity. Figure A-1 shows the general arrangement and the current status of all tanks.

TABLE A-1. Waste Storage Tank Contents.
Status as of April 30, 1980
Values in 1000 Gallons
(Page 1 of 3)

Tank	Liquid	Sludge	Salt Cake	Tank	Liquid	Sludge	Salt Cake
1,000,000-Gallon Tanks (Single-Shell)							
A-Farm				SX-Farm			
101	12	3	330	101	385	128	275
102	83	8	9	102	346	117	380
103	496	3	300	103	27	112	602
104L[a]	0	28	0	104	201	169	586
105L	0	19	0	105	146	73	668
106	618	50	0	106	173	12	75
				107L	0	109	0
AX-Farm				108L	0	87	0
				109L	0	257	0
101	13	3	597	110N	0	62	0
102	275	6	33	111L	0	125	0
103	909	6	0	112L	0	106	0
104N	6	3	0	113L	0	10	0
				114N	0	200	0
				115L	0	10	0
1,000,000-Gallon Tanks (Double-Shell)							
AY-Farm				AW-Farm			
101	264	52	0	101	0	0	0
102	382	6	0	102	0	0	0
				103	0	0	0
AZ-Farm				104	0	0	0
				105	0	0	0
101	962	1	0	106	0	0	0
102	875	23	0				
				AN-Farm			
SY-Farm							
				101	0	0	0
101	217	0	135	102	0	0	0
102	596	0	105	103	0	0	0
103	960	0	0	104	0	0	0
				105	0	0	0
				106	0	0	0
				107	0	0	0
758,000-Gallon Tanks							
BY-Farm				TX-Farm			
101N	8	109	330	101	102	73	0
102N	0	0	417	102N	0	0	334
103L	3	1	457	103	482	145	0
104N	11	43	580	104N	8	0	40
105N	0	87	539	105N	0	0	609
106N	0	95	531	106N	0	0	453
107N	0	150	176	107L	0	0	40
108L	0	178	181	108N	0	0	131
109N	33	79	354	109N	0	0	450
110N	3	123	382	110N	0	0	530
111N	0	26	589	111N	33	0	370
112N	0	15	295	112N	9	0	564

TABLE A-1. Waste Storage Tank Contents.
Status as of April 30, 1980
Values in 1000 Gallons
(Page 2 of 3)

Tank	Liquid	Sludge	Salt Cake	Tank	Liquid	Sludge	Salt Cake
758,000-Gallon Tanks (Cont.)							
S-Farm				TX-Farm (Cont.)			
101	379	244	88				
102	99	4	506	113N	0	0	681
103	522	10	143	114N	0	0	645
104N	0	299	0	115N	0	0	640
105N	0	2	486	116N	0	0	631
106N	0	32	580	117N	0	0	626
107	107	293	50	118	287	0	340
108N	0	4	608				
109N	0	13	555	TY-Farm			
110N	0	131	561				
111N	0	139	484	101N	0	169	0
112N	0	6	667	102N	3	0	70
				103L	0	172	0
				104N	0	46	0
				105L	0	285	0
				106L	0	21	0
533,000-Gallon Tanks							
B-Farm				C-Farm			
101N	0	103	0	101L	0	73	0
102N	14	18	19	102N	0	431	0
103N	24	0	68	103N	25	175	0
104N	14	301	94	104N	22	293	0
105N	0	40	253	105N	22	150	0
106N	14	125	0	106N	22	197	0
107L	3	191	0	107N	0	337	0
108N	33	0	70	108N	0	65	0
109N	14	0	120	109N	0	62	0
110N	0	282	0	110N	0	211	0
111N	3	246	0	111N	0	62	0
112N	6	37	0	112N	0	109	0
BX-Farm				T-Farm			
101N	0	46	0	101N	28	103	0
102L	0	40	0	102N	0	15	0
103N	0	76	0	103N	0	35	0
104	36	134	2	104N	0	483	0
105	99	65	3	105N	0	114	0
106N	14	29	0	106L	0	26	0
107N	0	376	0	107N	11	167	0
108L	0	26	0	108N	0	46	0
109N	0	208	0	109N	0	147	0
110N	2	189	11	110N	0	466	0
111N	22	68	143	111N	0	488	0
112N	0	169	0	112N	6	62	0

TABLE A-1. Waste Storage Tank Contents.

Status as of April 30, 1980
Values in 1000 Gallons
(Page 3 of 3)

Tank	Liquid	Sludge	Salt Cake	Tank	Liquid	Sludge	Salt Cake
533,000-Gallon Tanks (Cont.)							
U-Farm							
101L	5	21	0				
102N	0	43	335				
103N	42	32	379				
104L	0	125	0				
105N	25	32	349				
106N	16	26	185				
107	242	15	141				
108N	17	29	415				
109N	11	48	369				
110L	0	161	0				
111	116	26	355				
112L	2	46	0				
55,000-Gallon Tanks							
B-Farm				C-Farm			
201L	1	27	0	201N	4	0	0
202N	0	27	0	202N	2	0	0
203N	3	47	0	203N	4	4	0
204N	3	46	0	204N	3	0	0
T-Farm				U-Farm			
201N	0	27	0	201N	1	3	0
202N	0	20	0	202N	1	3	0
203N	0	36	0	203N	1	2	0
204N	0	37	0	204N	1	1	0

[a]L = leaker, N = inactive.

TABLE A-2. Single-Shell Tank Farms.

Tank Farm Number	Number of Tanks	Number Empty	Salt Cake Range/Tank m^3	Sludge Range/Tank m^3	Interstitial Liquor Range per Tank m^3	Thermal Problem[a] Number/Farm	Tanks Which Have Leakers or Have Q[b] Number/Farm
A	6	0	10.4 - 187	104 - 1770	0 - 93.7	3	2
AX	4	0	10.4 - 208	10.4 - 1770	0 - 74.9	2	0
B	16	0	0 - 1090	102 - 1550	0 - 54.8	0	8
BX	12	0	52 - 1370	99.4 - 1420	0 - 61.0	0	5
BY	12	0	0 - 749	1170 - 2400	0 - 51.7	0	5
C	16	3	0 - 1580	89.0 - 1680	0 - 51.7	3	3
S	12	0	32.2 - 2790	1070 - 2720	0 - 51.7	5	1
SX	15	0	32.8 - 3610	36.1 - 3670	0 - 80.0	12	9
T	16	0	52.0 - 1800	52.0 - 1800	0 - 50.0	0	6
TX	18	0	0 - 625	151 - 2580	0 - 51.7	2	8
TY	6	0	156 - 1160	78.5 - 1080	0 - 79.8	0	5
U	16	0	9.64 - 1990	8.90 - 1690	0 - 375	1	5

[a]Tanks generating more than 7.74×10^7 J/hr.

[b]Questionable Integrity.

All values as of 1985 and will change only slightly until solids are removed.

HANFORD TANK FARM FACILITIES

STATUS as of MARCH 31, 1980

UPDATED QUARTERLY

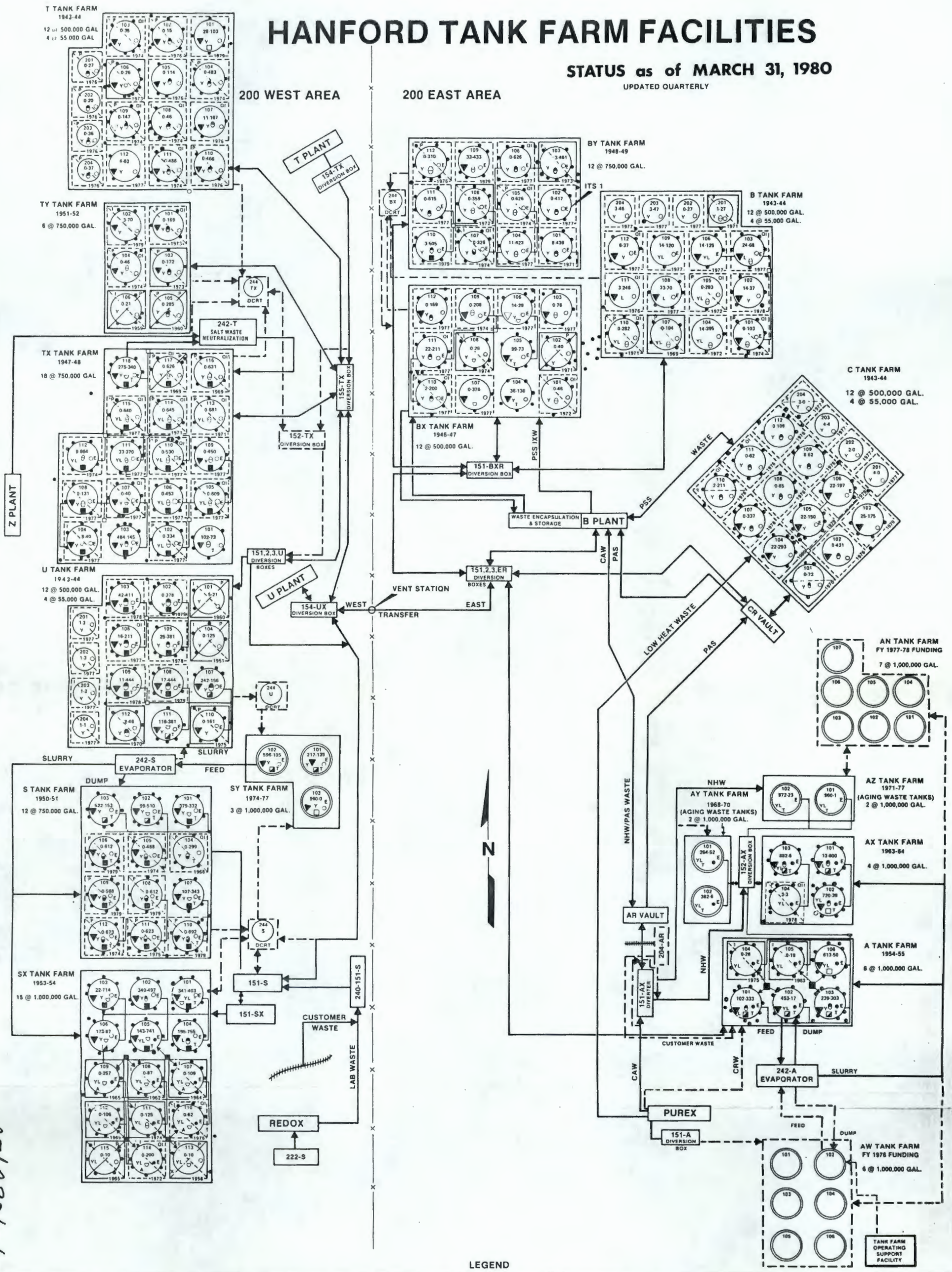

A7/A8 Blank

RHO-ST-33

FIGURE A-1. Hanford Tank Farm Facilities, March 31, 1980.

DISTRIBUTION

Number of Copies

OFFSITE

3 Argonne National Laboratory

J. H. Kittel (2)
M. J. Steindler

1 Colorado State University

F. W. Whicker

1 Cornell University

J. C. Smith

U.S. Department of Energy

2 Albuquerque Operations Office

R. Y. Lowrey (2)

1 Chicago Operations Office

S. A. Mann

6 Headquarters

G. H. Daly
J. E. Dieckhoner
C. A. Heath
D. J. McGoff
G. K. Oertel
R. D. Walton, Jr.

2 Oak Ridge Operations Office

S. W. Ahrends (2)

2 San Francisco Operations Office

S. G. Harbinson (2)

3 Savannah River Operations Office

E. S. Goldberg (2)
T. B. Hindman, Jr.

DISTRIBUTION (Continued)

Number of Copies

OFFSITE

4 E. I. DuPont de Nemours and Company

Savannah River Laboratory

J. L. Crandall
R. G. Garvin
D. L. McIntosh
M. C. Schroeder

1 Savannah River Plant

R. Maher

1 Lawrence Livermore Laboratory

J. D. Tewhey

1 North Carolina State University

H. Palmour, III

3 Oak Ridge National Laboratory

A. L. Lotts (3)

1 Office of Nuclear Waste Isolation

Battelle Memorial Institute

W. Carbeiner

1 Pennsylvania State University

R. Roy

4 Rockwell International - Canoga Park, CA

Energy Systems Group

J. Burton
L. Maki
A. B. Martin (2)

1 Sandia Laboratories - Albuquerque, NM

R. G. Kepler

DISTRIBUTION (Continued)

Number of Copies

OFFSITE

1 Stanford University

I. Remson

1 University of Florida

L. L. Hench

2 Vanderbilt University

F. L. Parker
D. C. Van Dine

ONSITE

9 U.S. Department of Energy - Richland Operations Office

P. A. Craig
O. J. Elgert
P. G. Harris
J. J. Schreiber (3)
F. R. Standerfer
M. J. Zamorski

7 Pacific Northwest Laboratories

R. D. Nelson (3)
A. M. Platt (3)
J. V. Robinson

DISTRIBUTION (Continued)

Number of Copies

ONSITE

73 Rockwell Hanford Operations

M. M. Beary
D. L. Becker
G. A. Beitel (2)
D. E. Braden
R. W. Carlson
D. R. Carpenter
C. R. Carter
D. C. Cockeram
J. W. Crow
J. L. Deichman
R. A. Deju
G. T. Dukelow
P. Felise
R. J. Gimera
D. R. Gustavson
R. D. Hammond
D. G. Harlow
A. R. Hawkins
W. T. Hotarek
G. P. Janicek
F. M. Jungfleisch
R. D. Keck
R. L. Koontz
E. J. Kosiancic
M. J. Kupfer
D. C. Lini
R. Y. Lyon
C. W. Manry
R. L. Martell
T. R. McKenzie
R. G. Oliver
R. D. Prosser
R. Raphael
P. E. Ray
I. E. Reep (2)
R. C. Roal
J. H. Roecker
W. W. Schulz
R. M. Schwenk
H. Spanheimer
P. F. Shaw
J. E. Stafford
R. J. Staudacher
J. K. Strickler (3)
C. L. Thomas
R. J. Thompson
H. A. Wallskog (3)
R. A. Watrous
J. R. Wetch (3)
D. D. Wodrich (3)
Correspondence Control (1)
Document Control (10)
Report Coordination
& Production (2)

RHO-ST-33
UC-70

THE SYSTEM FOR RETRIEVAL OF SOLIDIFIED HANFORD HIGH-LEVEL DEFENSE WASTES

A DESIGN DESCRIPTION

J. K. Strickler
H. A. Wallskog
J. R. Wetch

July 1980

Prepared for the United States
Department of Energy
Under Contract DE-AC06-RL01030

Rockwell International
Rockwell Hanford Operations
Energy Systems Group
Richland, Washington 99352

DOE Richland, WA