CP-14977
Revision 11

Plutonium Uranium Extraction Facility Documented Safety Analysis

Prepared for the U.S. Department of Energy
Assistant Secretary for Environmental Management

Contractor for the U.S. Department of Energy
under Contract DE-AC06-08RL14788

CH2MHILL
Plateau Remediation Company

P.O. Box 1600
Richland, Washington 99352

Approved for Public Release;
Further Dissemination Unlimited

CP-14977
Revision 11
EDC#: ECR-18-000341

Plutonium Uranium Extraction Facility Documented Safety Analysis

Document Type: DSA Program/Project: CPRM

C. J. Francy
CH2M HILL Plateau Remediation Company

Date Published
March 2019

Prepared for the U.S. Department of Energy
Assistant Secretary for Environmental Management

Contractor for the U.S. Department of Energy
under Contract DE-AC06-08RL14788

CH2MHILL
Plateau Remediation Company
P.O. Box 1600
Richland, Washington 99352

DATE:
Mar 13, 2019
HANFORD RELEASE

APPROVED
By Janis D. Aardal at 9:16 am, Mar 13, 2019

Release Approval | Date | Release Stamp

Approved for Public Release;
Further Dissemination Unlimited

TRADEMARK DISCLAIMER

Reference herein to any specific commercial product, process, or service by tradename, trademark, manufacturer, or otherwise, does not necessarily constitute or imply its endorsement, recommendation, or favoring by the United States Government or any agency thereof or its contractors or subcontractors.

This report has been reproduced from the best available copy.

Printed in the United States of America

Total pages: 206

CHPRC RECORD OF REVISION (ROR)	(1) Document Number CP-14977

(2) Title
Plutonium-Uranium Extraction Facility Documented Safety Analysis

Change Control Record

(3) Revision	(4) Description of Change – Replace, Add, and Delete Pages ADD ROW	Authorized for Release (5) DA/TA Date
0	EDC-03-15425 Initial Release	☒
0A	EDC-04-20992 Page Change to revise SMP TSR to be consistent with revised HNF-11724	AM Horner 7/23/04 ☒
1	EDC-05-27712 Annual Update	EN Dodd III 9/05 ☒
2	EDC-05-28139 Changes DSA and FHA fire related recommendations to a set that is uniform with other DSAs	EN Dodd III 6/14/06 ☒
3	EDC-06-31237 Full revision that merges annual update. Annual update includes effects of revised seismic spectra plus directed TSR changes	EN Dodd III 9/26/06 ☒
4	EDC-08-38181 Update to better reflect current facility configuration, to re-evaluate accident scenarios using RADIDOSE v.3, and make the format more consistent with other facility DSAs	EN Dodd III 1/21/09 ☒
5	PRC-EDC-09-43137 Major change is reflecting the change in facility ownership from FH to CHPRC.	EN Dodd III 2/24/10 ☒
5A	ECR-10-000958 Page change revision. Major change is correcting Radidose accident calculations for correct solubility class.	WA Dautel 1/5/11 ☒
6	ECR-12-001274 Annual Update. Major changes include deleting Inventory control TSR, adding DE-Ci limit to Staged Waste TSR, and inclusion of Storage Tunnel No. 1 MAR in the Seismic event.	ET Berg 2/12/13 ☒
7	ECR-14-000459 Annual Update. Major changes include discussion on why Tunnel 1 was analyzed and considered bounding for the fire scenario, detail added to the aircraft description in Appendix A.2 and reference to CP S&M Aircraft Impact Frequency. Structures previously listed as Design Features were revised to defense-in-depth to more accurately reflect how those structures are credited. Waste Inventory Control TSR basis updated to reflect current analyses regarding staged LLW/LLMW in ERDF containers.	AJ Olsen 5/8/14 ☒
8	ECR-15-000375 Annual Update. The major changes include upgrading the Waste Inventory Administrative Control to a Specific Administrative Control, incorporating Margin of Safety discussion, including a Recovery Plan definition in the TSR, and clarifying discussion on the hazard controls considered for Risk Bin II or greater events. Other changes include updating the hazards analysis (HA) table in Appendix A and Chapter with SMPs consistent with today's SMP titles and recording new HA SME reviewers, updating the facility figure with the current configuration of the facility layout, including adjacent sampling activities in planned activities, updating the facility description to provide discussion on neighboring contractors, updating the Fire Protection section to exclude KA 11-5, and removing the building DID structure from the TSR and ensuring it is adequately covered in Chapter 4.	AJ Olsen 11/30/15 ☒

CHPRC RECORD OF REVISION (ROR) (Continued)	(1) Document Number CP-14977
(2) Title Plutonium-Uranium Extraction Facility Documented Safety Analysis	

(3) Revision	(4) Description of Change – Replace, Add, and Delete Pages ADD ROW	Authorized for Release (5) DA/TA	Date
9	ECR-16-000884 Annual Update. Major changes include: updated hazard classifications of several structures in the PUREX Yard area to Less Than Hazard Category 3, and added those facilities' D&D to the approved activity list; updated accident analyses to remove damage ratios and release fractions of less than 1, update modeling of PUREX Tunnel releases, updated Crane Drop accident to split a Storage Tunnel crane drop accident out from the 202A Building crane drop accident, and updated other X/Q values; added a specific aircraft impact accident analysis; added two new SAC D.5.2 "Waste Inventory Control" requirements (TRU waste array staging separation and non-addition of radioactive inventory to the PUREX facility); and added the PUREX Storage Tunnel Soil Overburden as a new SS DF.	DM Carson 3/6/2017	☒
10	ECR-17-000452 Annual Update. Major changes include: Discussion on May 2017 Storage Tunnel 1 partial collapse, incorporated Storage Tunnel stabilization as an anticipated activity, update the Storage Tunnel fire accident to account for both tunnels and the introduction of electrical systems, recalculated tunnel siesmic event as a point source rather than a line source, added a siesmic with fire BDBA, credited 3' of soil over the tunnels as a passive SS DF providing a LPF of 0.5, renamed Waste Inventory Control to Material Management and rewrote accoding to DOE-STD-1186, provided more discussion on 324 hot cell wastes in Storage Tunnel 2, credited the 324 hot cell waste containers as DID.	DM Carson 8/16/2017	☒
11 RS	ECR-18-000341 Annual Update. Major Changes Include: Re-derived Tunnel 2 inventory, decayed entire inventory to 1/1/2018, deleted Tunnel 1 accidents, recalculated remaining accidents, removed SS designation from the Tunnel 1 overburden, and removed DID designation from the 324 waste containers and Tunnel 1 structure, added Criticality Safety AC	3/6/19	☒

CP-14977, Rev. 11

Plutonium-Uranium Extraction Facility Documented Safety Analysis

Prepared by:

CH2M HILL Plateau Remediation Company
Richland, Washington

September 2018

Executive Summary

ES.1 Facility Background and Mission

Over its life cycle, the PUREX Facility was designed and operated to recover plutonium, uranium, and neptunium from irradiated fuel elements received from the 100N Reactor and the single-pass reactors on the DOE Hanford Site.

Construction of the PUREX Facility began in 1952 and the facility began operating in 1956. The operation was shut down in September 1972. The facility was maintained in wet standby until 1978, with process and support equipment operating on a regular basis. From 1978 to 1983, the facility progressed from wet standby through cold start up tests and, in November 1983, resumed operations to recover plutonium from irradiated fuel. The PUREX Facility was operational until 1988, when it was again shut down. The facility began transitioning into a cold standby in October 1990, and was placed in cold standby in September 1992. In December 1992, planning was initiated to change the status of the PUREX Facility from cold standby to deactivation (or transition to shutdown). Deactivation was completed in 1998 and the facility has been in surveillance and maintenance (S&M) status since that time.

ES.2 Facility Overview

The PUREX Facility is located approximately 32 km (19.9 mi) northwest of Richland, Washington, near the center of the Hanford Site.

Public access to the Hanford Site is currently restricted and controlled at the Wye Barricade on Route 4, and the Yakima and Rattlesnake Barricades on State Highway 240. Unauthorized access to the PUREX Facility is prohibited. The PUREX complex buildings and structures are locked and a 1.8 m (6 ft) cyclone fence encloses the immediate areas, with entrance to the Facility controlled by the Central Plateau Risk Management Organization.

The closest operational facility is the 241-AW Tank Farm, which is under control of Washington River Protection Solutions (WRPS).

The 202A Building consists of three main structural components: a thick-walled, heavily-shielded concrete portion called the canyon, which contains the former processing equipment; a section composed of three gallery levels parallel to and isolated from the canyon; and a steel and transite annex to the north of the gallery section that houses offices, the laboratory, and a number of building service areas.

The canyon is subdivided into a single row of 12 process cells paralleled on the south side by a hot (radioactive) pipe trench and an air tunnel connected to the cells, which runs underneath the pipe trench. East of the canyon, a railroad spur enters the plant through a below-grade tunnel.

Two, below-grade storage tunnels containing contaminated equipment extend southward from the east end of the 202A Building. One of these, Storage Tunnel 1, was stabilized in November 2017, by being filled with engineered grout, following a partial collapse in May 2017. Storage Tunnel 2 will undergo a similar grout stabilization beginning in 2018.

Active systems at PUREX are limited to the electrical distribution, exhaust ventilation, instrumentation systems, and fire detection/alarms systems in 252AB and 217A.

There are no operating processes in the PUREX Facility and current planned activities consist primarily of S&M, Storage Tunnel 2 stabilization (grouting), and D&D of Less Than Hazard Category 3 (LTHC3) minor structures.

ES.3 Facility Hazard Categorization

PUREX is a Hazard Category 2 nuclear facility.

ES.4 Safety Analysis Overview

The significant hazards associated with PUREX are summarized in the table below. The Seismic Event is the bounding accident, and accidents representing risk bin II or greater are highlighted.

Scenario	Frequency	Co-located Worker [rem]	Offsite Public [rem]	Risk Bins
3.4.1 (SP-1) 202A Crane Drop	Anticipated	10.9	0.07	III/III
3.4.2 (SP-2) Tunnel Crane Drop	Anticipated	3.5	0.02	III/III
3.4.3 (EE-1) 202A Aircraft Impact	Extremely Unlikely	40.8	0.26	III/IV
3.4.4 (SP-3) Waste Container Drop	Anticipated	5.6	0.04	III/III
3.4.5 (FIR-1) Staged Waste Fire	Anticipated	2.8	0.02	III/III
3.4.6 (FIR-2) N-Cell Fire	Unlikely	29.6	0.20	II/III
3.4.7 (NPH-1) Seismic Event	Unlikely	49.2	0.32	II/III
3.4.8 (BEBE-1) BEBE Event	Beyond Extremely Unlikely	52.6	0.34	N/A

The Technical Safety Requirement (TSR) controls include:

- D.5.1 Safety Management Programs (AC)
  - Implement HNF-11724, CHPRC Safety Management Programs
- D.5.2 Material Management (SAC)
  - No radioactive waste from other facilities
  - Staged waste limit of 40 DE-Ci (239 grams of 202A mixture)
- D.5.3 Nuclear Criticality Safety (AC)
  - Establishes a Criticality Safety Program

Three ft of soil over Storage Tunnel 2 is credited as a Safety Significant (SS) Design Feature which provides a 50% reduction of dose consequences from tunnel related accidents.

ES.5 Organizations

The contractor responsible for maintenance of PUREX and development of this Documented Safety Analysis (DSA) is CH2M HILL Plateau Remediation Company (CHPRC).

ES.6 Safety Analysis Conclusions

The PUREX safety basis is appropriate and no issues have been identified that are significant to the PUREX safety basis.

ES.7 DSA Organization

This DSA complies with the 2016 revision of DOE-STD-1120, *Preparation of Documented Safety Analysis for Decommissioning and Environmental Restoration Activities*, supplemented with DOE-STD-3009-2014, *Preparation of Nonreactor Nuclear Facility Documented Safety Analysis*.

Contents

1.0 Introduction 1-1
1.1 Rationale for DSA Methodology 1-1
1.2 Facility Overview 1-2
1.3 Summary of Facility Hazard Categorization 1-3
1.4 Summary of Safety Analysis Results 1-3

2.0 Facility Description 2-1
2.1 Facility and Work Description 2-1
2.1.1 PUREX Facility 2-1
2.1.2 Surveillance and Maintenance 2-2
2.1.3 Decontamination and Decommissioning 2-2
2.2 Site Location 2-2
2.3 Facility Life Cycle Planned Activities 2-12
2.3.1 Routine Area Surveillance 2-13
2.3.2 Surveillance and Maintenance of Barriers and Postings 2-13
2.3.3 Identification and Removal of Asbestos 2-13
2.3.4 Waste Container Management 2-13
2.3.5 Equipment Calibration, Testing, Maintenance, and Repair 2-14
2.3.6 Repair and Upgrades of Confinement Systems 2-14
2.3.7 Repair and Upgrades of Structural Components 2-14
2.3.8 Inspection for and Response to Spills 2-14
2.3.9 Removal and Disposal of Hazardous Wastes 2-15
2.3.10 Nondestructive Assay Waste Characterization and Sampling 2-15
2.3.11 Removal of Equipment and Legacy Waste 2-15
2.3.12 Radiological Surveys 2-16
2.3.13 General Inspections and Tours 2-16
2.3.14 D&D Activities in the PUREX Yard 2-16
2.3.15 Stabilization of PUREX Storage Tunnel 2 2-16
2.3.16 Administrative Activities 2-17
2.4 Facility Description 2-18
2.4.1 202A Building (Main Canyon Building) 2-20
2.4.2 271AB Building (Office/Maintenance Annex) 2-21
2.4.3 Laboratory Annex 2-22
2.4.4 203A Storage Area 2-22
2.4.5 204A Building (U-Cell) 2-22
2.4.6 221A Building (Pipefitter Shop) 2-22
2.4.7 276A Building (R-Cell) 2-23
2.4.8 218-E-14 (Storage Tunnel 1) 2-23

2.4.9 218-E-15 (Storage Tunnel 2) 2-24
2.5 Structures, Systems, and Components 2-25
2.5.1 Electrical System 2-25
2.5.2 Ventilation System 2-28
2.5.3 Surveillance and Monitoring Control System (SAMCONS) Unit 2-33
2.5.4 Water Systems 2-33
2.5.5 Fire Systems 2-33

3.0 Hazards and Accident Analyses 3-34
3.1 Summary of Hazards 3-34
3.1.1 Radioactive Material Inventory 3-34
3.1.2 Hazardous Chemical and Toxic Material Inventory 3-38
3.1.3 Industrial Hazards 3-39
3.2 Nuclear Facility Hazard Categorization 3-39
3.2.1 Hazard Category 3-39
3.2.2 Criticality 3-39
3.3 Hazard Analysis 3-40
3.3.1 Evaluation Guideline 3-40
3.3.2 Facility Worker 3-41
3.3.3 Chemical Consequence Levels 3-41
3.3.4 Environmental Consequence Levels 3-41
3.4 Accident Analysis 3-43
3.4.1 (SP-1) 202A Crane Drop 3-44
3.4.2 (SP-2) Tunnel Crane Drop 3-46
3.4.3 (EE-1) 202A Aircraft Impact 3-49
3.4.4 (SP-3) Waste Container Drop 3-53
3.4.5 (FIR-1) Staged Waste Fire 3-55
3.4.6 (FIR-2) N-Cell Fire 3-57
3.4.7 (NPH-1) Seismic Event 3-61
3.4.8 (BEBE-1) Beyond Evaluation Basis Event 3-66
3.5 Safety Structures, Systems, and Components 3-67
3.6 Margin of Safety 3-67

4.0 Safety Structures, Systems, and Components 4-1
4.1.1 Safety Class SSCs 4-1
4.2 Safety Significant SSCs 4-1
4.3 Specific Administrative Controls 4-2
4.3.1 Material Management (SAC) 4-2
4.4 Defense-in-Depth Systems, Structures, and Components 4-4
4.5 Administrative Controls 4-5
4.5.1 AC D.5.1: Safety Management Programs (AC) 4-5

4.5.2 AC D.5.3: Nuclear Criticality Safety 4-5
4.6 Hazard Control Derivation Basis 4-6

5.0 Derivation of Technical Safety Requirements 5-1
5.1 TSR Coverage 5-1
5.2 Derivation of Facility Modes 5-1
5.2.1 S&M Mode 5-1
5.3 TSR Derivation 5-1
5.3.1 Limiting Conditions for Operation and Surveillance Requirements 5-1
5.3.2 Administrative Controls 5-1
5.4 Design Features 5-2
5.4.1 Storage Tunnel 2 Soil Overburden – Tunnel Collapse Events 5-2
5.5 Interface with Technical Safety Requirements from Other Facilities 5-2
5.6 Step Out Criteria 5-2

6.0 Prevention of Inadvertent Criticality 6-1
6.1 Introduction 6-1
6.2 Governing Documents 6-1
6.3 Criticality Safety Program 6-1
6.4 Supporting Safety Management Programs 6-1

7.0 Safety Management Programs 7-1
7.1 Radiation Protection 7-1
7.2 Fire Protection 7-1
7.3 Maintenance 7-1
7.4 Procedures 7-1
7.5 Training 7-1
7.6 Conduct of Operations 7-2
7.7 Quality Assurance 7-2
7.8 Emergency Preparedness 7-2
7.9 Radioactive and Hazardous Waste Management 7-2
7.10 Hazardous Material Protection 7-2
7.11 Provisions for Decontamination and Decommissioning 7-3
7.12 Management, Organization, and Institutional Safety Provisions 7-3

8.0 References 8-1

Appendices

A Hazard Analysis Summary Data A-1
B RADIDOSE Calculations B-1
C Hazardous Material Inventories C-1

D Technical Safety Requirements for PUREX Facility D-1

Figures

Figure 2-1. PUREX Facility Location 2-3
Figure 2-2. PUREX Nuclear Facility Boundary 2-4
Figure 2-3. PUREX Facility Structures 2-5
Figure 2-4. 202A Building Perspective Cutaway 2-6
Figure 2-5. 202A Cross Section 2-7
Figure 2-6. 202A Partial Plan at Storage Gallery Level 2-8
Figure 2-7. 202A Cell Block and Vessel Location 2-9
Figure 2-8. Storage Tunnel 2 Cross Section 2-10
Figure 2-9. N-Cell Floor Plan 2-11
Figure 2-10. Storage Tunnel 1 Partial Collapse 2-24
Figure 2-11. The PUREX Facility Electrical System 2-27
Figure 2-12. PUREX HVAC System Flow Diagram 2-31
Figure 2-13. HVAC Consolidation Flow Schematic 2-32

Tables

Table 2-1. PUREX Facility Structures 2-18
Table 3-1. PUREX Facility Inventory in Grams, January 2018 3-35
Table 3-2. PUREX Facility Inventory in DE-Ci, January 2018 3-35
Table 3-3. 202A Inventory in Grams, January 2018 3-36
Table 3-4. 202A Inventory in DE-Ci, January 2018 3-37
Table 3-5. PUREX Storage Tunnel 2 Inventory, January 2018 3-37
Table 3-6. PUREX Hazard Categorization 3-39
Table 3-7. Qualitative Frequency Classification 3-40
Table 3-8. Consequence Thresholds 3-41
Table 3-9. Qualitative Risk Ranking Bins 3-41
Table 3-10. Hazard Analysis Environmental Consequence Categories 3-42
Table 3-11. Scenarios Originally Selected for Quantitative Review 3-42
Table 3-12. SP-1 Source Term 3-45
Table 3-13. SP-1 Unmitigated Consequences 3-45
Table 3-14. SP-2 Source Term 3-47
Table 3-15. SP-2 Unmitigated Consequences 3-47
Table 3-16. SP-2 Mitigated Consequences 3-48
Table 3-17. EE-1 Source Term (Mechanical Component) 3-50
Table 3-18. EE-1 Source Term (10% Flammable Component) 3-51
Table 3-19. EE-1 Source Term (90% Non-Flammable Component) 3-51

Table 3-20. EE-1 Unmitigated Consequences 3-52
Table 3-21. SP-3 Source Term 3-53
Table 3-22. SP-3 Unmitigated Consequences 3-54
Table 3-23. FIR-1 Source Term 3-56
Table 3-24. FIR-1 Unmitigated Consequences 3-56
Table 3-25. FIR-2 Source Term (10% Flammable Component) 3-59
Table 3-26. FIR-2 Source Term (90% Non-Flammable Component) 3-59
Table 3-27. FIR-2 Unmitigated Consequences 3-60
Table 3-28. NPH-1 Source Term (202A and Deep-Bed Filters) 3-62
Table 3-29. NPH-1 Source Term (Tunnel 2 Items from 202A) 3-63
Table 3-30. NPH-1 Source Term (Tunnel 2 324 Waste) 3-64
Table 3-31. NPH-1 Unmitigated Consequences 3-64
Table 3-32. NPH-1 Mitigated Consequences 3-65
Table 3-33. BEBE-1 Unmitigated Consequences 3-66
Table 4-1 PUREX Facility Unmitigated Accident Summary 4-1
Table 4-2. Summary of SACs 4-2
Table 4-3 PUREX 202A Waste Composition 4-4
Table 4-4. Defense-in-Depth Equipment 4-5

Terms

AC	administrative control
AMU	aqueous makeup
ARF	airborne release fraction
BEBE	Beyond Evaluation Basis Event
BEU	Beyond Extremely Unlikely
CFR	*Code of Federal Regulations*
CHPRC	CH2M HILL Plateau Remediation Company
Ci	curie
CPRM	Central Plateau Risk Management
CSER	Criticality Safety Evaluation Report
CSP	Criticality Safety Program
CW	Co-located Worker
D&D	Deactivation and Decommissioning
DBA	Design Basis Accident
DE-Ci	dose-equivalent curie
DF	Design Feature
DID	Defense-in-Depth
DOE	U.S. Department of Energy
DR	damage ratio
DSA	Documented Safety Analysis
ECMP	east crane maintenance platform
Ecology	State of Washington, Department of Ecology
EG	Evaluation Guideline
EPP	Emergency Preparedness Program
ERDF	Environmental Restoration Disposal Facility
FHA	Fire Hazards Analysis
FSAR	Final Safety Analysis Report
FW	Facility Worker
HA	Hazards Analysis
HC	Hazard Category
HEPA	high-efficiency particulate air
HSEAS	Hanford Site Emergency Alerting System
HVAC	heating, ventilation, and air conditioning
I&C	instrument and control
JHA	job hazards analysis
KA	key attribute
LLMW	low-level mixed waste
LLW	low-level waste
LPF	leak path factor

LTHC3	Less Than Hazard Category 3
MAR	material at risk
MOI	maximally-exposed offsite individual
NDA	nondestructive assay
NPH	natural phenomena hazard
P&O	piping and operating
PBS	polymeric barrier system
PFP	Plutonium Finishing Plant
PPE	personal protective equipment
PR	product removal
PUREX	Plutonium-Uranium Extraction
QA	Quality Assurance
RCRA	*Resource Conservation and Recovery Act of 1976*
RF	respirable fraction
RL	U.S. Department of Energy - Richland Operations Office
RPP	Radiation Protection Program
S&M	surveillance and maintenance
SAC	Specific Administrative Control
SAMCONS	Surveillance and Monitoring Control System
SC	safety class
SIH	standard industrial hazard
SMP	Safety Management Program
SS	safety significant
SSC	structure, system, and component
TED	total effective dose
TK	tank
TRU	transuranic
TSD	treatment, storage, and disposal
TSR	Technical Safety Requirement
UBC	Uniform Building Code
USQ	Unreviewed Safety Question
WAC	*Washington Administrative Code*
WDOH	State of Washington, Department of Health
WRPS	Washington River Protection Solutions

1.0 Introduction

This document provides the Documented Safety Analysis (DSA) and Technical Safety Requirements (TSRs) that apply to activities at the Plutonium-Uranium Extraction (PUREX) Facility. This DSA was developed in accordance with DOE-STD-1120-2016, *Preparation of Documented Safety Analysis for Decommissioning and Environmental Restoration Activities*, and is compliant with 10 CFR 830, "Nuclear Safety Management." The following documents were also used for guidance in the preparation of this document:

- DOE-STD-3009-2014, *Preparation of Nonreactor Nuclear Facility Documented Safety Analysis*
- DOE-HDBK-3010-94, *Airborne Release Fraction/Rates and Respirable Fractions for Nonreactor Nuclear Facilities*
- DOE-HDBK-1224-2018, *Hazard and Accident Analysis Handbook*

1.1 Rationale for DSA Methodology

The PUREX Facility has been in an extended Surveillance and Maintenance (S&M), and as discussed in DOE-STD-1120-2016 and DOE-STD-3011-2016, *Preparation of Documented Safety Analysis for Interim Operations at DOE Nuclear Facilities*, a DSA based on the guidance provided in DOE-STD-3011-2016 would be the recommended safe harbor. Previous revisions of this DSA have been prepared based on the guidance provided in earlier versions of DOE-STD-1120, therefore, based on discussions with U.S. Department of Energy (DOE) - Richland Operations Office (RL), this and subsequent revisions will be maintained in accordance with the guidance provided in DOE-STD-1120-2016.

For background on the reason previous editions of this DSA were written to the DOE-STD-1120 standard; from 02-ABD-0091, *Contract No. DE-AC06-96RL13200 – FHI Nuclear Safety Expectation for Nuclear Facilities in Surveillance and Maintenance*:

> The safe harbor permitted for deactivation or transition surveillance and maintenance of a nuclear facility is either method described in DOE-STD-3009 or DOE-STD-3011. The safe harbor permitted for decommissioning of a nuclear facility encompasses methods described in DOE-STD-1120-98, "Integration of Environment, Safety and Health into Facility Disposition Activities," and provisions in 29 CFR 1910.120 or 29 CFR 1926.65 (HAZWOPER). Additionally, an evaluation of public safety impacts and development of necessary controls is required when the facility being decommissioned contains radiological inventory or contamination exceeding the Rule's definition for low-level residual fixed radioactivity.
>
> DOE-STD-1120-98 states that the standard applies to "all phases of facility disposition." While not explicitly stated in the Rule, the "Implementation Guide for Use in Developing Documented Safety Analyses to Meet Subpart B of 10 CFR Part 830" also refers to guidance contained in DOE-STD-1120 as applicable to deactivation, transition surveillance and maintenance, and decommissioning.

> Many aspects of DOE-STD-1120-98 are desirable for Hanford facilities that are either in an inactive state, or undergoing deactivation or decommissioning. In particular, the standard encourages the performance of both a facility and task-level hazard analysis. These activities provide the foundation for both the facility safety basis and worker protection. The standard also includes clarification on when to update DSA's; encourages maximum use of existing safety basis documents and provides clarification on when this is appropriate; addresses cost-effective methods for addressing and integrating hazard analysis requirements such as natural phenomena assessment; and provides useful guidance with respect to how to manage "uncertainties" in material inventories or facility configurations. Further, DOE-STD-1120 provides the appropriate linkages to DOE-STD-3009, DOE-STD-3011, and HAZWOPER for preparing DSA's.

As discussed in DOE-STD-1120-2016, the hazards and accident analysis process (including control selection and TSR derivation) described in DOE-STD-3009-2014 should be used as a reference. The guidance provided in DOE-STD-3009-2014 was followed in the development and revision of the hazards and accident analyses contained in this DSA. Although the layout is not in alignment with DOE-STD-1120-2016, the content meets or exceeds the requirements of DOE-STD-1120-2016.

1.2 Facility Overview

Over its life cycle, the PUREX Facility was designed and operated to recover plutonium, uranium, and neptunium from irradiated fuel elements received from the 100N Reactor and the single-pass reactors on the DOE Hanford Site. Construction of the PUREX Facility began in 1952 and the facility began operating in 1956. The operation was shut down in September 1972. The facility was maintained in wet standby until 1978, with process and support equipment operating on a regular basis. Failed equipment was either upgraded or replaced. From 1978 to 1983, the facility progressed from wet standby through cold start-up tests and, in November 1983, resumed operations to recover plutonium from irradiated fuel. The PUREX Facility was operational until 1988, when it was again shut down. The facility began transitioning into a cold standby in October 1990, and was placed in cold standby in September 1992. In December 1992, planning was initiated to change the status of the PUREX Facility from cold standby to deactivation (or transition to shutdown). Deactivation was completed in 1998 and the facility has been in S&M status since that time.

The PUREX Facility is composed of the Main Canyon Building (202A) and several support structures, including two annex buildings (the office annex and the laboratory annex) located on the north side of the canyon. Two, below-grade storage tunnels containing contaminated equipment extend southward from the east end of the 202A Building. One of these, Storage Tunnel 1, was stabilized in November 2017, by being filled with engineered grout, following a partial collapse in May 2017. Storage Tunnel 2 will undergo a similar grout stabilization beginning in 2018.

There were additional facilities (tank farms, cribs, and retention basins) used to support PUREX during processing operations.

For PUREX operational history, see SD-HS-SAR-001, *PUREX Final Safety Analysis Report*, Rev. 3, Appendix B.

For PUREX technical details the following documents are suggested:

- HW-31000, 1955, *PUREX Technical Manual*
- RHO-MA-116, 1980, *PUREX Technical Manual*
- WHC-SP-0479, 1989, *PUREX Technical Manual*

1.3 Summary of Facility Hazard Categorization

Based on the facility inventory and potential energy sources, all three facility segments (i.e., 202A Building, 202A Building ventilation system, and Storage Tunnels 1 and 2) are categorized as Hazard Category (HC) 2 nuclear facilities. It is noted that the term "segment" does not imply that credit is taken for providing segmentation. Determination of the HC is presented in Section 3.2. Other facilities (shops, sample stations, etc.) that were used to support PUREX during processing operations are considered part of the 202A segment.

For criticality, the facility is classified as a limited control facility. A limited control facility may contain greater than one-half of a minimum critical mass, but a criticality is determined to be incredible due to the physical form and distribution of the fissionable material. Controls are required to protect the declaration of incredibility.

1.4 Summary of Safety Analysis Results

The hazard and accident analyses for PUREX are described in detail in Chapter 3.0 of this DSA. All unmitigated accident scenarios resulted in potential consequences that are less than 5 rem total effective dose (TED) to the maximally-exposed offsite individual (MOI) receptor. This corresponds to low risk (i.e., Risk Bins III or IV) for bounding accidents per the risk evaluation guidelines in DOE-STD-3009-2014. As such, there are no safety class structures, systems, and components (SSCs) identified with mitigation or reduction of hazards to the MOI.

The bounding accident scenario for PUREX is the PUREX Facility and Storage Tunnel 2 Seismic Event, which results in a dose consequence of 49.2 rem TED to the Co-located Worker (CW) for the unmitigated scenario. This event (see Section 3.4.7) assumes that the material at risk (MAR) consists of the inventories of the 202A Building, deep-bed filters, and all of the Storage Tunnel 2 MAR, including the waste items from the 324 facility.

In addition, the 202A Building Aircraft Impact and the N-Cell Fire accidents also result in consequences that exceed a 25 rem dose to the CW for unmitigated accident scenarios (i.e., above "low"). Safety significant (SS) SSCs were considered for these events, though none were identified that would not require significant physical upgrades to the facility. The remaining accident scenarios identified in Chapter 3.0 resulted in less than 25 rem TED to the CW.

The building structures and components such as the cell cover blocks in the canyon were considered for SS classification, however because these areas are not routinely surveilled, and because the structure is an aging facility that is minimally maintained (repaired only as necessary to ensure confinement) it is not appropriate to classify these structures as SS, nor is it feasible to perform the surveillance requirements associated with SS structures.

One passive SS Design Feature (DF) is identified in the Hazards Analysis (HA) and in Chapter 4.0: 0.9 m (3 ft) of the soil overburden over Storage Tunnel 2. This DF mitigates releases from an impact, seismic, or age related collapse of Storage Tunnel 2. This SS DF is protected by the Unreviewed Safety Question (USQ) Process, and inspection during the annual facility surveillance.

The 202A Building structures (including canyon, galleries, and cover blocks) are classified as Defense-in-Depth (DID) structures providing confinement of hazardous materials. The deep-bed filter physical boundaries, including the below-grade foundations and wall structures and the cover blocks are classified as DID structures providing a degree of confinement of the MAR within the filters during normal operations and some accident conditions.

Three TSRs are implemented to protect accident assumptions and reduce the risk of these events. The Material Management Specific Administrative Control (SAC) protects the accident assumptions of these events by ensuring that the MAR does not increase, and by limiting the radiological inventory of transuranic (TRU) waste or TRU-containing equipment removed from PUREX Facilities that may be staged outside at the PUREX Facility. The Criticality Safety Administrative Control (AC) establishes a Criticality Safety program and provides measures that ensure Criticality Safety Program key elements are in place to prevent an accidental criticality at PUREX. The Safety Management Program (SMP) AC reduces the risk of these events by implementing applicable SMPs, such as the Fire Protection Program.

A Beyond Evaluation Basis Event (BEBE), a seismic event with subsequent crane drop, was evaluated to determine the adequacy of the controls identified. Based on this evaluation, the selected controls were determined to be adequate and no additional controls are required.

2.0 Facility Description

This chapter provides a description of the PUREX Facility, including the PUREX storage tunnels, with emphasis on the major features of the facility and the processes that were carried out, to understand the basis of the hazards and accident analyses. A graded approach was established for this chapter by providing a model of the facilities that would allow an independent reader to develop an understanding of facility operations and an appreciation of facility structure without extensive consultation of references. The level of detail required in the facility description is based on the degree of facility complexity necessary to understand the analyses. These descriptions are intended as a general reference, and reference documents are cited for further details.

2.1 Facility and Work Description

2.1.1 PUREX Facility

Over its life cycle, the PUREX Facility was designed and operated to recover plutonium, uranium, and neptunium from irradiated fuel elements received from the 100N Reactor and the single-pass reactors on the DOE Hanford Site. Plutonium was recovered as an acidic solution of plutonium nitrate or was converted to plutonium oxide in N-Cell. Various products were then transferred to the Plutonium Finishing Plant (PFP). Uranium was recovered as uranyl nitrate hexahydrate, which was transferred for further processing to the Uranium Trioxide Plant. Neptunium was recovered and transferred to other Hanford Site facilities. The location of the PUREX Facility on the Hanford Site is illustrated in Figure 2-1.

Construction of the PUREX Facility began in 1952, and the facility began operating in 1956. The operation was shut down in September 1972. The facility was maintained in wet standby mode until 1978. During this period, major plant components, such as extraction columns and associated tanks, were periodically flushed with nitric acid solution. Pumps, column pulsers, jets, and other mechanical components were operated on a regular basis. Failed equipment was either upgraded or replaced. From 1978 to 1983, the plant progressed from wet standby through cold start-up tests and resumed recovery operations in November 1983. The PUREX Facility was operational until 1988 when it was again shut down. The facility began transitioning into cold standby mode in October 1990, and was placed in cold standby in September 1992. In December 1992, planning was initiated to change the status of the PUREX Facility from cold standby to deactivation (or, transition to shutdown). Deactivation was completed in 1998, and the facility has been in S&M since that time. The PUREX Facility, which consists of the main canyon building (202A), adjacent buildings, facilities, and PUREX Storage Tunnels 1 and 2, is illustrated in Figure 2-3. Figure 2-4 is a perspective cutaway view of the PUREX 202A Building. Figure 2-5 illustrates a cross section view of the 202A Building. Figure 2-6 provides a partial plan view of 202A at the Storage Gallery level. Figure 2-7 shows how the canyon cells are configured.

Since the facility was placed into S&M, a new roof was placed over the 202A Canyon and aqueous makeup (AMU) areas (see HNF-11698, *PUREX Roof Collapse Accident Analysis*). Conditions in the facility have been relatively stable since deactivation with minor exceptions.

In May 2017, Storage Tunnel 1 suffered a partial collapse of the tunnel roof: see section 2.4.8 for more details, and section 2.3.15 for a description of the stabilization of Storage Tunnel 2.

2.1.2 Surveillance and Maintenance

S&M activities are performed in accordance with the current S&M plan, DOE/RL-98-35, *Surveillance and Maintenance Plan for the Plutonium-Uranium Extraction (PUREX) Facility*.

2.1.3 Decontamination and Decommissioning

PUREX has been solely in S&M since the completion of deactivation. There are no plans for any Decontamination and Decommissioning (D&D) activities for any of the HC-2 PUREX facilities at this time; those ancillary structures in the PUREX yard which have been categorized as Less Than Hazard Category 3 (LTHC3) may undergo D&D after appropriate planning and analysis, see Section 2.3.14 for more details.

2.2 Site Location

The PUREX Facility is located approximately 32 km (19.9 mi) northwest of Richland, Washington, near the center of the Hanford Site. See Figure 2-1.

Public access to the Hanford Site is currently restricted and controlled at the Wye Barricade on Route 4, and the Yakima and Rattlesnake Barricades on State Highway 240. Unauthorized access to the PUREX Facility is prohibited. The PUREX complex buildings and structures are locked and a 1.8 m (6 ft) cyclone fence encloses the immediate areas, with entrance to the Facility controlled by the Central Plateau Risk Management (CPRM) Organization.

The closest operational facility is the 241-AW Tank Farm, which is under control of Washington River Protection Solutions (WRPS), and shown on Figure 2-2.

Detailed site characteristics are provided in Section 1.0 of HNF-11724, *CH2M HILL Plateau Remediation Company Safety Management Program*.

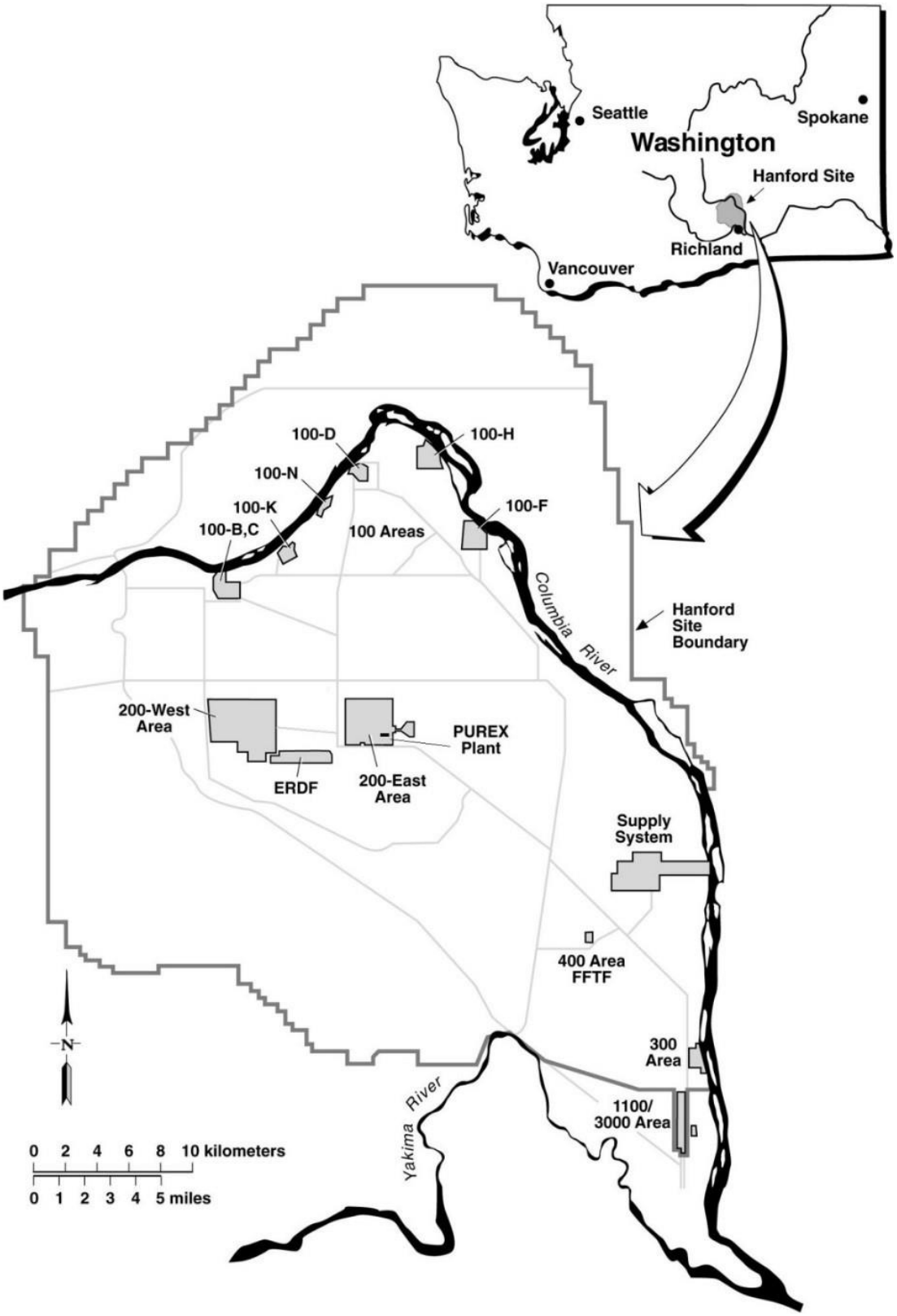

Figure 2-1. PUREX Facility Location

Figure 2-2. PUREX Nuclear Facility Boundary

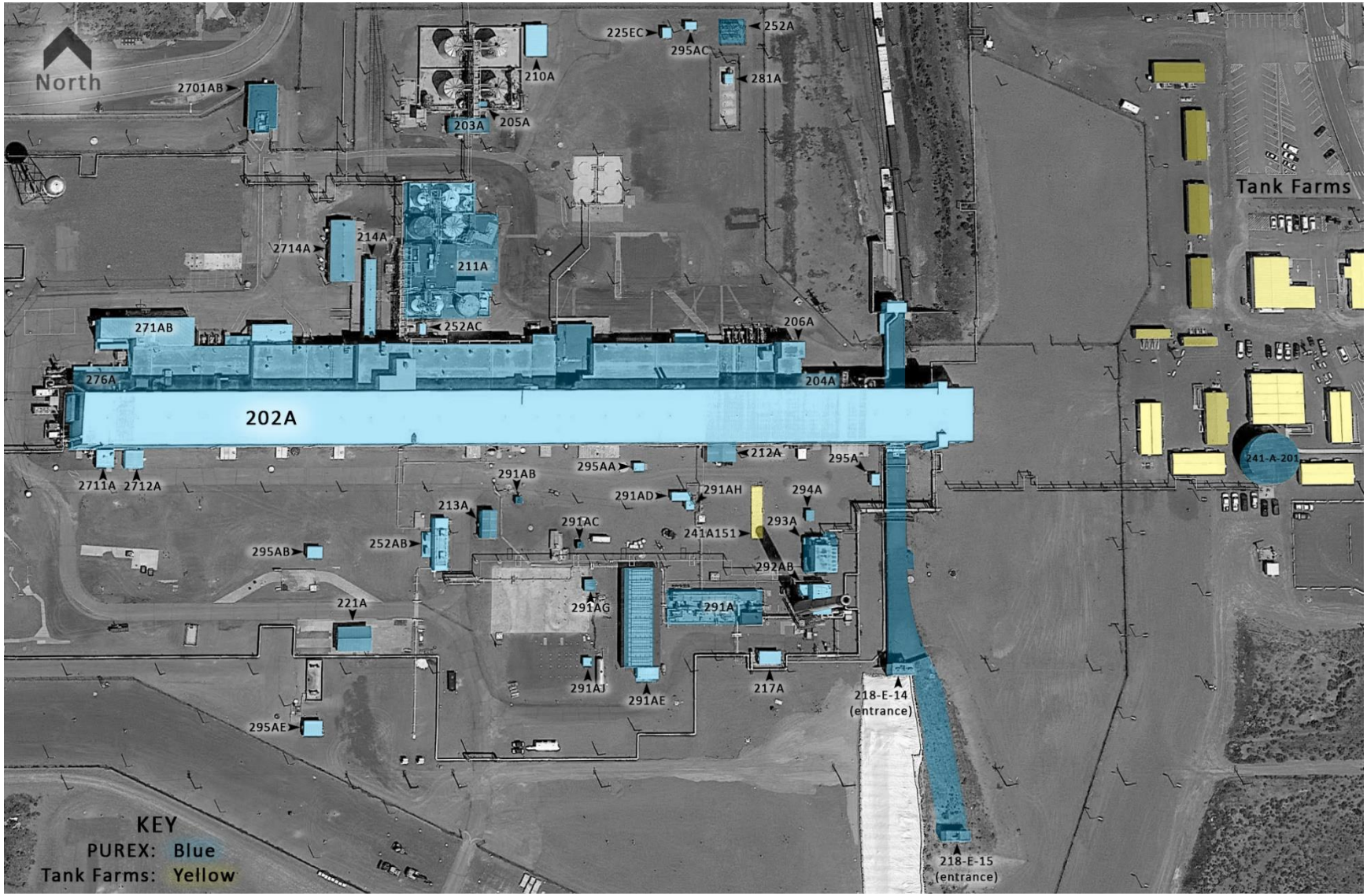

Figure 2-3. PUREX Facility Structures

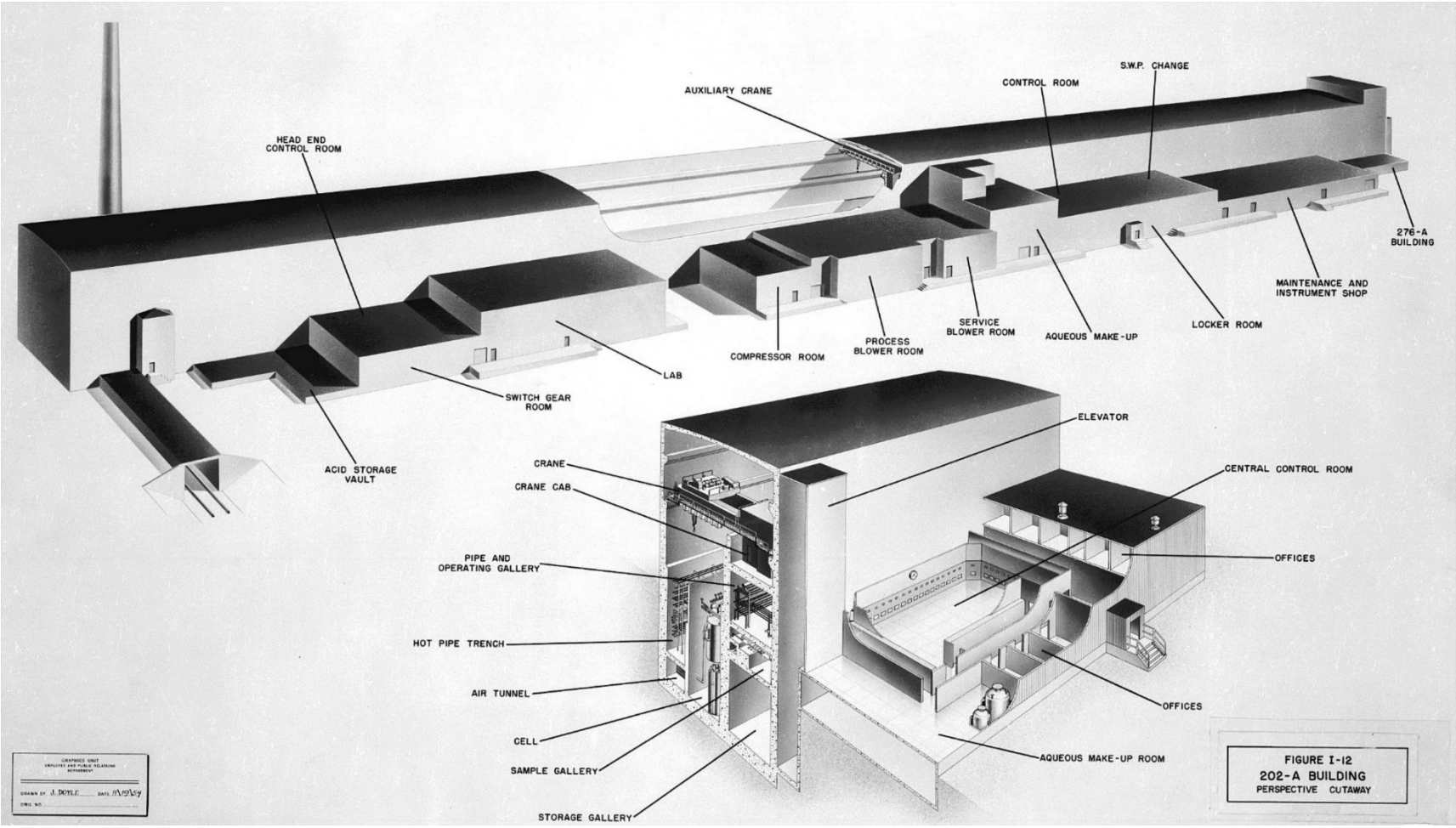

Figure 2-4. 202A Building Perspective Cutaway

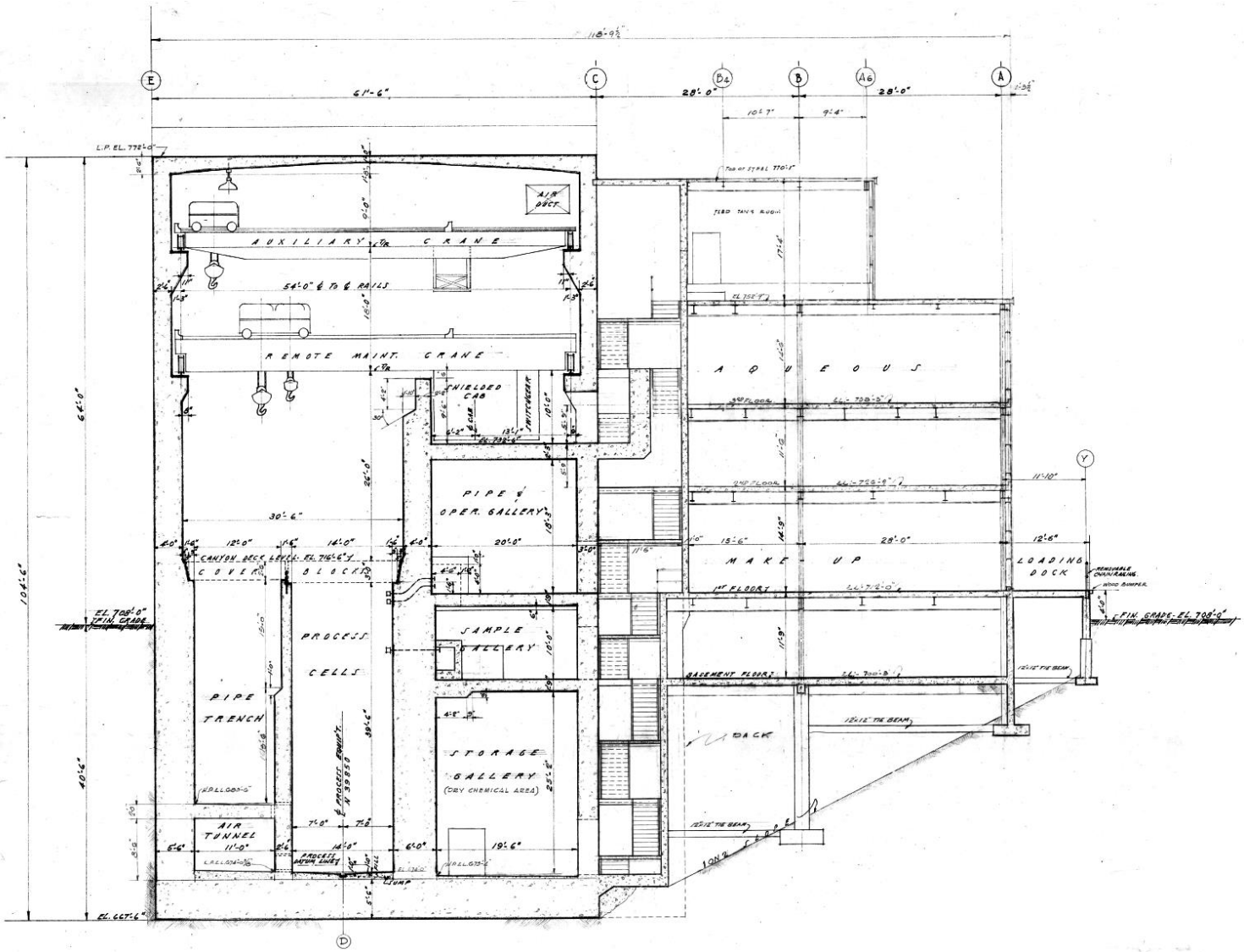

Figure 2-5. 202A Cross Section

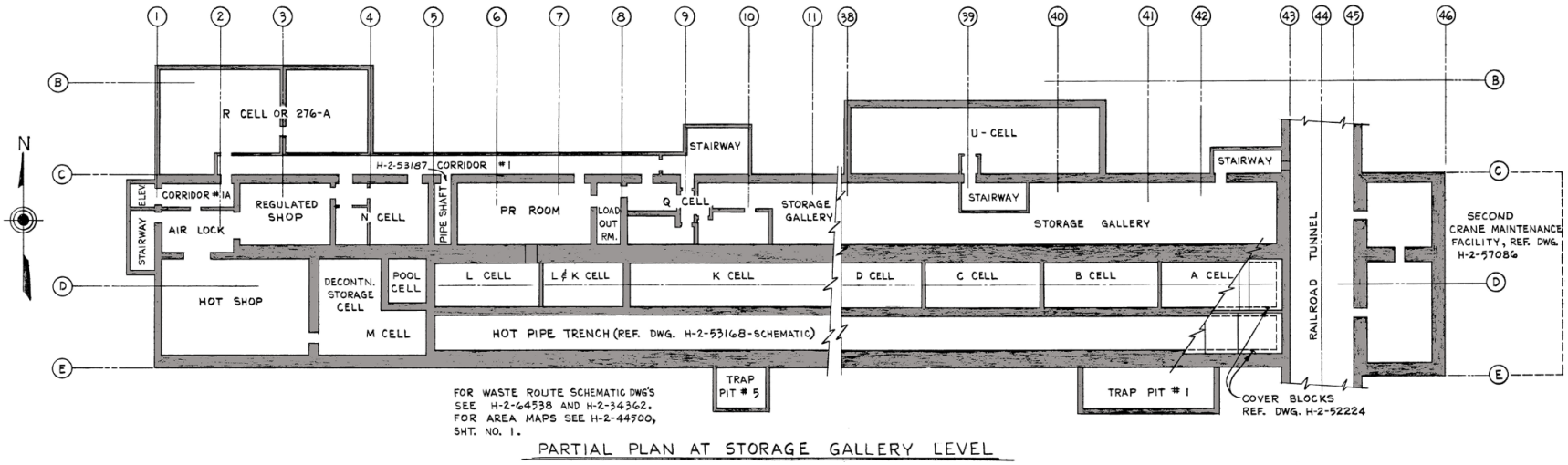

Figure 2-6. 202A Partial Plan at Storage Gallery Level

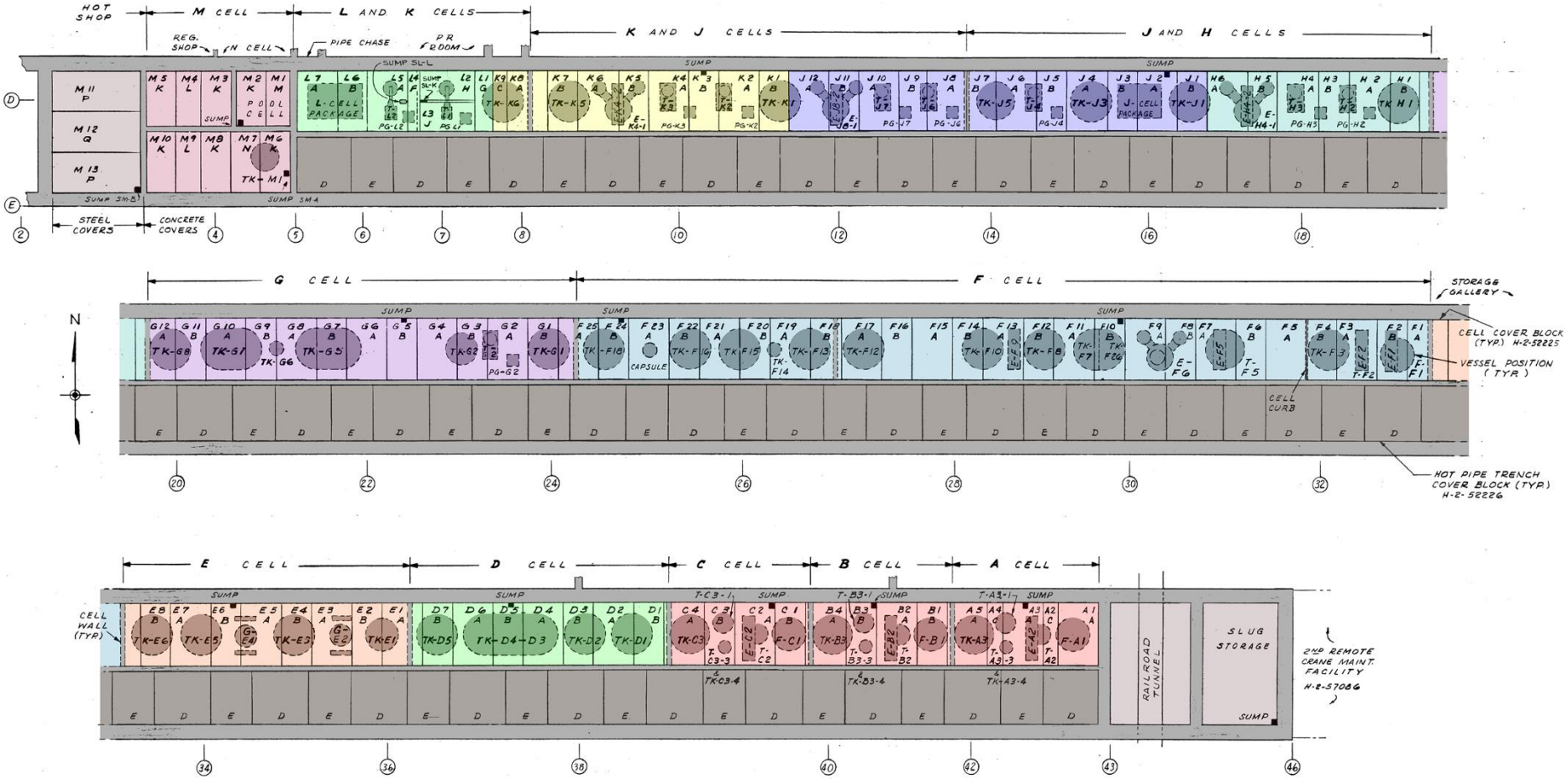

Figure 2-7. 202A Cell Block and Vessel Location

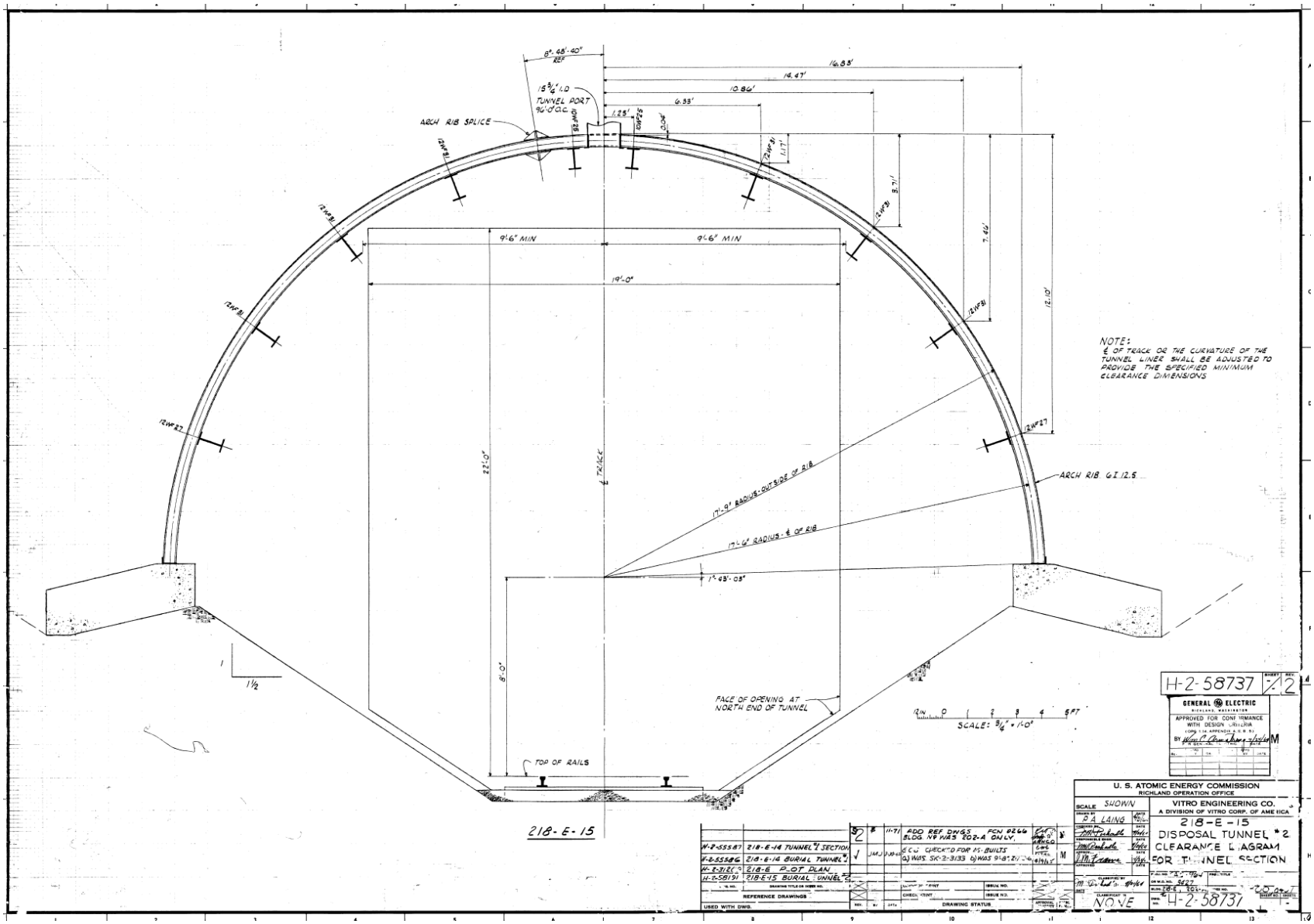

Figure 2-8. Storage Tunnel 2 Cross Section

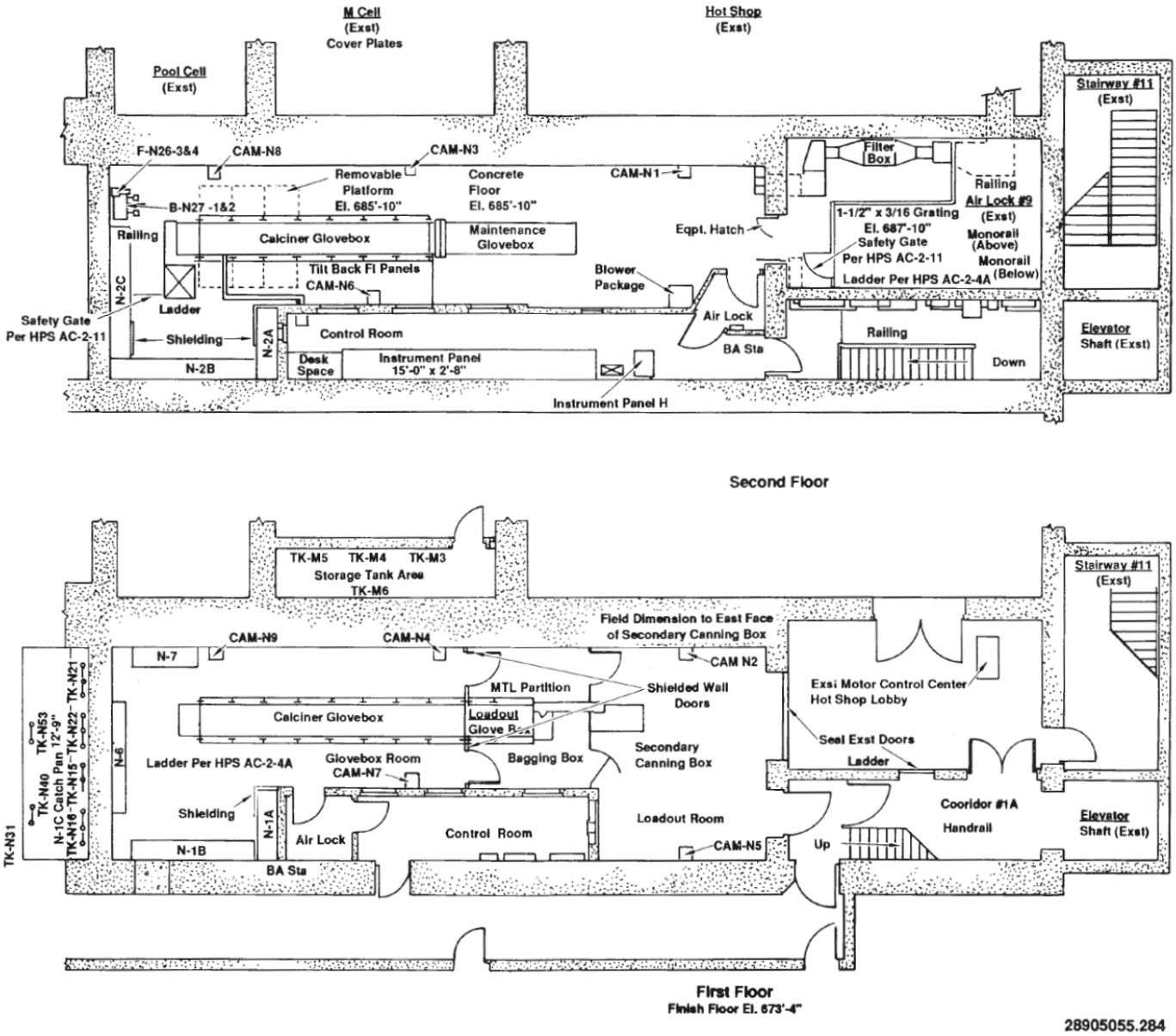

Figure 2-9. N-Cell Floor Plan

2.3 Facility Life Cycle Planned Activities

There are no operating processes in the PUREX Facility and current planned activities consist primarily of S&M, Storage Tunnel 2 stabilization (grouting), and D&D of LTHC3 minor structures.

Active facility systems are limited to the following:

- Electrical distribution
- Exhaust ventilation
- Instrumentation systems
- Fire detection/alarms systems in 252AB and 217A

The storage of supplies and materials related to S&M activities and limited deactivation activities is anticipated.

The scope of work includes S&M activities that maintain confinement of hazardous wastes and protect the worker. This includes pre-approved activities for surveillance of the facility, preventative maintenance of selected equipment, and incidental storage of necessary supplies and equipment.

The work scope also includes activities that are anticipated, but are not currently defined by pre-approved procedures. Examples of anticipated activities without pre-approved procedures include:

- Specific asbestos abatement actions
- Replacement or upgrades of postings and barriers
- Container management
- Repairs to SSCs
- Spill response
- Characterization
- Response to or investigation of surveillance results

Facility characterization activities are anticipated to support future D&D activities. Characterization, sampling, and geophysical logging activities may include the insertion, setup, sampling, and (if needed) decommissioning of boreholes (wells).

Limited removal of equipment is appropriate to repair equipment, or address equipment or structural failure. Any hot work or introduction of combustible material, such as a temporary containment, within the facility must be reviewed and approved by fire protection personnel in accordance with site procedures.

The USQ process is a programmatic control used to aid in change management. Procedures, when revised, are screened and evaluated as required under USQ requirements. Original and revised work instruction packages are screened and evaluated as required under the USQ

process. Surveillance results, audits, and similar documents are reviewed to determine if they meet the criteria for review under discovery requirements of the USQ process.

2.3.1 Routine Area Surveillance

Routine area surveillances are implemented by approved procedures.

2.3.2 Surveillance and Maintenance of Barriers and Postings

Barriers and postings are used to prevent inadvertent access to hazardous areas and to inform personnel of conditions that exist at the PUREX Facility. Barriers and postings consist of locks and tags, door locks, fencing, confined-space postings, and radiological-area postings. Barriers and postings are installed and inspected as part of the S&M activities, as specified in the work instructions. Discrepant conditions regarding barriers or postings are identified on associated data/inspection sheets and corrected.

2.3.3 Identification and Removal of Asbestos

Asbestos-containing materials or presumed asbestos-containing materials are inspected before renovation or equipment removal/repair activities. If damaged friable asbestos is present, the actions to be taken will depend upon the scope and severity of the damage. Repair, encapsulation, or removal will be managed through the requirements of the hazardous material control SMP and the Fire Protection program.

To reduce the hazard intrinsically associated with asbestos, asbestos may be removed in bulk anywhere in the PUREX Facility footprint, consistent with established asbestos remediation and fire protection requirements. This will allow for safer eventual intrusive decommissioning activities, and reduced personal protective equipment (PPE) requirements. Asbestos removal activities that support repair or D&D of LTHC3 structures in the PUREX yard are also anticipated.

2.3.4 Waste Container Management

Normally, relatively small volumes of waste are accumulated during S&M activities. Risk reduction actions or other non-routine activities provide the need for conservative contingency plans. Designated areas may be used to accumulate waste before shipping. The addition of radiological material from other facilities to the PUREX inventory is prohibited per TSR D.5.2 Material Management (SAC). This requirement does not apply to instrument check sources, calibration check sources, and contaminated tools or equipment. TRU waste staged for transport is placed in waste containers that comply with HNF-EP-0063, *Hanford Solid Waste Acceptance Criteria*, as well as any other Transportation Safety requirements.

Surveillance activities include inspecting existing containers, sampling, identifying, and labeling unlabeled containers. TRU waste containers are removed and transported to an authorized treatment, storage, and disposal (TSD) facility. Periodic container inspections are performed to identify container deterioration or signs of leakage. If a deteriorating or leaking container is found, the situation is evaluated and actions are taken based on the severity of the situation, e.g., the container may be monitored, repackaged, or moved to an appropriate TSD. Corrective action is taken, when applicable, to prevent recurrence.

Occasional use of Environmental Restoration Disposal Facility (ERDF) roll-off waste boxes or other containers designated low-level waste (LLW) or low-level mixed waste (LLMW) is anticipated. For the purpose of compliance with TSR D.5.2, this minimal LLW or LLMW stream can be assigned a value of 0.15 DE-Ci per ERDF container. CP-51329, *Evaluation of TSR Compliance for the 224-T Waste Storage Area and all Surveillance and Maintenance Satellite Accumulation Waste Areas* provides a basis for why the use of 0.15 DE-Ci per ERDF container is conservative.

The activities are managed consistent with applicable requirements of the radioactive and hazardous waste management, hazardous material protection, work control, fire protection, and radiation protection SMPs.

2.3.5 Equipment Calibration, Testing, Maintenance, and Repair

Calibration and testing are conducted as appropriate on equipment such as level monitoring systems, ventilation systems, and electrical components. Elements and schedules for these activities are included in the procedures and task instructions.

Maintenance and repairs are performed as necessary to maintain equipment. Proposed changes will be evaluated individually to determine if these are within the bounds of the safety analysis as required by the Work Control and USQ Programs.

Maintenance may include pumping of condensate collected in Catch Tank V-11-10-1 and 216-A-TK2. Based on previous performance of this activity, the collected condensate has contained insignificant quantities of radionuclides (i.e., well below HC 3 quantities).

2.3.6 Repair and Upgrades of Confinement Systems

Maintenance and repair will be performed to the PUREX confinement systems as necessary to maintain system capability. Upgrades or physical changes to these systems may be undertaken if the changes provide equivalent or improved confinement. Proposed changes will be evaluated individually to determine if they are within the bounds of the safety basis per the requirements of the work control and USQ Programs.

2.3.7 Repair and Upgrades of Structural Components

Structural components necessary to ensure confinement will be repaired or upgraded as needed to maintain control of hazardous wastes. Proposed changes will be evaluated individually to determine if they are within the bounds of the safety basis per the requirements of the work control and USQ Programs.

2.3.8 Inspection for and Response to Spills

Accessible areas of the PUREX Facility are routinely surveilled for indications of spills of hazardous wastes. If a spill is discovered, the affected area will be isolated to prevent personnel exposure, and corrective measures will be determined and performed.

Repairs may be made to the PUREX components as necessary to contain hazardous materials. This includes repairs to, or removal of components with visible leakage or residue.

Cleanup of contamination areas, including application of fixatives, is anticipated.

2.3.9 Removal and Disposal of Hazardous Wastes

Any hazardous waste removed from the PUREX Facility may, after proper waste designation, be disposed of at ERDF or another approved disposal facility, as appropriate. Wastes will be packaged and shipped to an appropriate disposal facility in compliance with requirements of the hazardous material protection SMP. LLW may be placed into LLW containers and staged outside of the 224-T Facility.

The PUREX Facility is subject to the requirements of 40 CFR 265, "Interim Status Standards for Owners and Operators of Hazardous Waste Treatment, Storage, and Disposal Facilities," Subpart DD, as prescribed by *Washington Administrative Code* (WAC) 173-303-400, "Interim Status Facility Standards." The following are the TSD Units that are subject to the standards:

- TK-D5
- TK-E5
- TK-E6
- TK-F3
- TK-F4
- T-F5
- E-F11
- TK-F15
- TK-F16
- TK-F18
- TK-G1
- TK-G2
- T-G2
- TK-G5
- TK-G7
- TK-G8
- TK-H1
- T-H2
- E-H4
- TK-J1
- TK-J3
- T-J6
- T-J7
- TK-J21
- T-J22
- T-J23
- TK-K1
- T-K2
- T-K3
- TK-K6
- T-L2
- TK-L3
- T-L4
- TK-M2
- TK-Q21
- TK-Q22
- TK-R1
- TK-R2
- T-R2
- TK-R7
- TK-US
- TK-P4
- TK-40
- TK-156
- Containment Building 202A

Waste was removed from 202A and placed in the storage tunnels during deactivation, except for the steel, open-top skip containing waste from the E-Cell floor, which is currently stored in F-Cell. The PUREX storage tunnels are managed as final status TSD storage units under the RCRA Part B Permit.

2.3.10 Nondestructive Assay Waste Characterization and Sampling

Nondestructive assay (NDA), waste characterization, and sampling are anticipated in the PUREX Facility. These activities may be performed to better identify and characterize radioactive material inventory and location, determine quantity and makeup of newly-discovered material, or support planning for eventual disposition. Characterization activities such as recording radiation and contamination levels, making video recordings, and sampling residues are included. The activities will be performed in accordance with established programs and procedures and shall comply with special controls (e.g., criticality reviews) as stated in this document.

2.3.11 Removal of Equipment and Legacy Waste

Equipment (e.g., abandoned conduits, deactivated electrical equipment) may be removed from the PUREX Facility to reduce the risks from known hazards and to redeploy obsolete equipment as spare and replacement equipment (e.g., switchgears, motor control centers). Legacy waste items may be removed from the PUREX Facility and disposed of in accordance with the applicable requirements. General deactivation, such as large-scale removal of facility equipment, is not anticipated unless it is in response to indications of degradation of equipment or spread of contamination that impacts continued safe operation.

2.3.12 Radiological Surveys

Radiological surveys are routinely conducted to support activities at PUREX and are performed in accordance with established programs and procedures.

2.3.13 General Inspections and Tours

General inspections and tours may be performed at any time. Inspections and tours will be conducted in accordance with appropriate programs and procedures. Inspections may include equipment identification and walk-downs of future work scope-associated activities. These newly-identified work scopes shall be communicated to the nuclear safety organization so that appropriate hazard analyses may be performed for future inclusion in the DSA.

2.3.14 D&D Activities in the PUREX Yard

The D&D activities described below are anticipated to limit the hazards outside of the PUREX Canyon and to facilitate future D&D of the PUREX Facility.

- Cleanup/removal of LTHC-3 components in the PUREX yard (e.g., steam lines, electrical components, and other components such as tanks that are no longer in use).
- D&D activities (partial or complete) of the LTHC-3 structures and associated tanks outside the canyon that are listed in Table 2-1. This may include removal of retained liquids by draining or adding absorbent material, removal of hazardous materials such as asbestos, and removal of components.

This does not include the following property that is under the control of Tank Farms within the PUREX footprint:

- Diversion Box 241A151
- Catch Tank 241A302A

2.3.15 Stabilization of PUREX Storage Tunnel 2

Subsequent to the partial collapse, initial remediation, and stabilization of Storage Tunnel 1, a plan has been instituted for long-term stabilization of Storage Tunnel 2 to ensure the safe storage of the materials stored within it until the time of the tunnels' permanent disposition.

The stabilization of the Storage Tunnel 2 uses engineered grout to fill the void spaces and encapsulate the equipment stored within. Use of engineered grout is a technology previously proven on the Hanford Site in stabilizing or filling portions of other retired processing facilities (e.g., U Plant, Waste Encapsulation and Storage Facility, Hot Semiworks, Storage Tunnel 1).

The fill material is tailored to match the specific required compressive strength, cure time, water resistance, and flow characteristics chosen for the tunnel stabilization. To control the stresses to the tunnel structures during the filling process, and to avoid rearrangement of the stored equipment due to buoyancy effects, the engineered grout is emplaced in fairly shallow-depth "lifts," which will be allowed to partially cure before the next lift is started.

Existing 76 cm (30 in.) diameter observation risers spaced along the length of Storage Tunnel 2 will be utilized as locations for:

- Grout insertion
- Cameras and lighting
- Displaced air exhaust (which is routed to high-efficiency particulate air [HEPA]-filtered exhaust skids)
- Radcon and Industrial Hygiene monitoring equipment
- Other low-voltage instrumentation as needed for surveillance, troubleshooting, and facility worker (FW) safety

Additionally, a mobile batch plant for supplying grout will be placed south of the nuclear facility boundary by the currently unused Integrated Disposal Facility (IDF) burial trench. This will allow the mixer trucks to travel back-and-forth between the batch plant and the tunnel conveyance system without needing to co-mingle with the general Hanford Site traffic.

When complete, the stabilization of Storage Tunnel 2 is expected to:

- Remove the possibility of a partial or full collapse
- Remove tunnel accidents such as crane drops, aircraft crash penetrations, etc.
- Protect the stored equipment and materials from damage
- Provide additional security with respect to hazardous waste items
- Provide an additional amount of radiation shielding for the material held within the items stored in the tunnel
- Not preclude any future actions taken for final remediation of the tunnels (i.e., eventual removal of the stored equipment and materials, and the tunnel structures)
- Reduce risk to the Public, DOE, and Hanford Contractors

All work associated with tunnel stabilization is subject to USQ review. See CHPRC-03587, *Functional Design Criteria for PUREX Tunnel 2 Stabilization Grouting System*.

2.3.16 Administrative Activities

Administrative Activities are performed to support the facility's operation. These activities are primarily administrative, training, and technical support activities that do not deal directly or indirectly with hazardous materials. Administrative activities will be conducted for all CPRM facilities. The following is a non-comprehensive list of examples of administrative activities:

- Managing records and controlling documents dealing with the facility
- Preparing, providing, and tracking required training for facility personnel
- Planning work activities
- Maintaining the facility safety basis and evaluating new activities
- Managing the facility and providing technical support to Operations
- Monitoring work status and tracking system configurations

- Maintaining databases associated with chemical, hazardous material, and waste inventories.

2.4 Facility Description

The physical layout of the PUREX Facility is shown in Figure 2-3 and the buildings included in the PUREX Facility are listed in Table 2-1. The following subsections contain descriptions of the main PUREX structures in the final deactivated configuration. These configurations and conditions were used in the HA to support this DSA (see Appendix A). Only key structures are described in this section. The previous FSAR contained a more detailed description of the facility and systems based on the operations of the facility (SD-HS-SAR-001, *PUREX Final Safety Analysis Report*). All of the information used to assess the facility hazards and controls for S&M activities has been included in this document.

The PUREX nuclear facility boundary is provided in Figure 2-2; it includes the buildings and structures with HC 3 or greater inventories. The facility boundary includes the yard area within the inner fence topped with concertina wire surrounding the facility, excluding marked WRPS Tank Farm Facilities. While these WRPS Facilities are on the PUREX Facility footprint and within 100 m (328 ft) of the PUREX Facility, WRPS is responsible for their maintenance and operation.

In the event of an emergency at PUREX, potentially-affected WRPS personnel are notified and instructed on what emergency actions to take through the Hanford Site Emergency Alerting System (HSEAS) operated by the Hanford Site Emergency Management organization. Other contractors that may be located within 100 m (328 ft) of the facility would also receive emergency notification and instruction through the HSEAS. Specific response actions to an event at PUREX may also be directed by the CPRM Building Emergency Director.

The total inventory of the 202A Building and ventilation system and Storage Tunnels 1 and 2 are conservative and bounding for all buildings identified as HC 2 in Table 2-1. The structures identified as LTHC3 were determined to have less than a HC 3 quantity of material based on process knowledge and historical information. CP-59591, *Hazard Categorization for Plutonium-Uranium Extraction Facilities 203-A. 211-A, 214-A, and 271-AB* provides the basis for downgrading the facilities listed in its title.

Table 2-2. PUREX Facility Structures

Building ID	Building Description/Components	Hazard Category
202A	Main Canyon Building (including canyon, galleries, lab annex, PR dock, support areas)	HC 2
203A	UNH Pump House, Storage Area, Control Room	LTHC3
204A	U-Cell	HC 2
205A	Silica Gel Facility	LTHC3
206A	Fractionator	LTHC3
210A	Drum Storage	LTHC3
211A	Liquid Chemical Tank Farm	LTHC3

Table 2-2. PUREX Facility Structures

Building ID	Building Description/Components	Hazard Category
212A	Fission Product Load-Out	LTHC3
213A	Fission Product Load-In/Maintenance Shop	HC 2
214A	A/B/C/D PUREX Facility Warehouse	LTHC3
217A	SAMCON Unit	LTHC3
218-E-14	Storage Tunnel 1	HC 2
218-E-15	Storage Tunnel 2	HC 2
221A	Pipefitter Shop (radioactive materials storage area)	HC 2
225-EC	Treated Effluent Disposal Facility Monitoring Building	LTHC3
241-A-151	Shielded Valve Pit	LTHC3
241-A-201	Cooling Water Tank	LTHC3
252A	Switchgear/Transformer Station	LTHC3
252AB	Electrical Substation	LTHC3
252AC	Surveillance Lighting Electrical Substation	LTHC3
271AB	PUREX Office/Maintenance Facility	LTHC3
276A	R-Cell	HC 2
281A	Emergency Generator Facility	LTHC3
291AE	No 4 Filter Building	HC 2
291A	Exhaust Plenum, Fans, and Main Stack	HC 2
291AB	Sample Shack	LTHC3
291AC	Instrument Shack	LTHC3
291AD	Ammonia Off-Gas Filter Building	LTHC3
291AG	Instrument Shack	LTHC3
291AH	Ammonia Off-Gas Sampler Building	LTHC3
291AJ	Instrument Shack	LTHC3
291AK	Air Tunnel Enclosure	LTHC3
292AA	PR Stack Sample House, PR Exhaust Sampling and Monitoring	LTHC3
292AB	Main Stack Building	LTHC3
293A	Dissolver Off-Gas Station	LTHC3
294A	Off-Gas Instrument Shack	LTHC3
295A	Ammonia Scrubber Distillate Sample Station	LTHC3
295AA	Steam Condensate Discharge Sample/Pump Station	LTHC3
295AB	Process Distillate Discharge Sample Station	LTHC3
295AC	Chemical Sewer Line Sample Station	LTHC3
295AE	Process Distillate Discharge Monitoring Station	LTHC3
2701AB	Badge House	LTHC3
2711-A-1	Air Compressor Building	LTHC3

Table 2-2. PUREX Facility Structures

Building ID	Building Description/Components	Hazard Category
2712	Pump House	LTHC3
2714A	Chemical Warehouse	LTHC3
2901A	Water Tower	LTHC3
200-E-58	Process Distillate Discharge Diversion Tank	LTHC3
DBF1 and DBF2	Deep-bed Filters 1 and 2	HC 2

For the building summaries, the majority of the physical dimensions were removed as having them listed in paragraph format impaired readability. If this level of detail is needed, it is provided in HNF-SD-CP-ISB-004.

2.4.1 202A Building (Main Canyon Building)

The 202A Building consists of three main structural components: a thick-walled, heavily-shielded concrete portion called the canyon, which contains the former processing equipment; a section composed of three gallery levels parallel to and isolated from the canyon; and a steel and transite annex to the north of the gallery section that houses offices, the laboratory, and a number of building service areas.

The canyon area proper is a narrow structure that has the following dimensions, with 12.2 m (40 ft) of the structure is below grade:

- Length: 306.3 m (1,005 ft)
- Width: 9.3 m (30 ft 6 in.)
- Height: 31.7 m (104 ft)

The basic features and arrangement are shown in Figure 2-4. The portion of the canyon below grade is subdivided into a row of process equipment cells paralleled by a ventilation air tunnel and pipe tunnel through which intercell solution transfers are made. The air tunnel exhausts the ventilation air from the cells to the main ventilation filters and stack.

The canyon is subdivided into a single row of 12 process cells paralleled on the south side by a hot (radioactive) pipe trench and an air tunnel connected to the cells, which runs underneath the pipe trench. East of the canyon, a railroad spur enters the plant through a below-grade tunnel. At the east end of the canyon there is a fuel storage basin. All fuel was removed and the floor of the basin was stabilized during deactivation. See Figure 2-7 for the configuration of the canyon process cells.

The east crane maintenance platform (ECMP) is in an extension that was added to the existing 202A Building in 1957. The extension is a reinforced-concrete and steel-beamed structure and the three exterior sides are made of asbestos-cement board, which is in turn covered with precast concrete panels. Three interior steel-plate shielding doors separate the canyon from the ECMP.

The hot-pipe trench contains an array of pipe headers interconnecting the cells that permitted intercell transfers of radioactive solutions. Also, the pipe trench contains the piping for transfers to facilities outside the 202A Building, which have been isolated.

The air tunnel lies directly below the pipe trench. Air flows into the PUREX Canyon through infiltration, is drawn through the cells, then flows through the air tunnel to the HEPA filters, and is discharged out the 291-A-1 exhaust stack. See Section 2.5.2 for additional details.

A craneway runs nearly the entire length of the canyon for three (two master and one slave) bridge-type, 40-ton capacity cranes. The slave crane was remotely controlled from the other two cranes and used primarily to assist in removing large equipment items from cells.

Three gallery levels, located parallel to, but isolated from, the canyon on the north side of the structure by shielding walls, contain service piping and process instrumentation, equipment for process samples, and storage space for equipment and dry chemicals.

The Piping and Operating (P&O) gallery contains deactivated instrument racks, electrical motor controls, steam and cooling water supply lines, and the piping and associated valves for transferring nonradioactive solutions that served the in-cell equipment. The deactivated instrument racks are a known beryllium hazard.

The Sample Gallery contains the remote samplers that were used for obtaining process samples from the cell equipment. A shielded pipe chase behind the remote sampler boxes contains header piping for recovered nitric acid, organic solvent, sampler drains, and sampler lines to and from the cell equipment.

The west end of the Storage Gallery is a separate area that was used for the neptunium purification and loadout facility (in Q-Cell), the plutonium product removal (PR) room, and the plutonium oxide production facility (in N-Cell). An equipment maintenance and decontamination area (in M-Cell) and a low-level contaminated equipment maintenance shop, which was used for maintenance of equipment removed from the canyon, are located at this level, but were not part of the storage gallery proper. The floor plan for N-Cell is provided in Figure 2-9.

The service annex is adjacent to the galleries and consists of two separate areas. The larger main area contains the maintenance shops, offices, lunch room, locker room, radiation zone entry lobby, ventilation air and supply room, a switchgear room, compressor room, central control room, and the AMU Facility. The smaller laboratory area contains the analytical laboratory, the head-end control room, and a switchgear room.

External to the 202A Building are U-Cell and R-Cell, located on the north side of the structure. The U-Cell is just east of the laboratory area and contains the former recovered nitric acid storage tanks and laboratory waste tanks. The R-Cell is located west of the main area and contains process equipment for cleanup of process solvents.

2.4.2 271AB Building (Office/Maintenance Annex)

The 271AB office/maintenance annex is a two-story building located on the north side and at the west end of the 202A Building. The exterior walls are steel-on-steel frame with a built-up roof

of steel decking on a steel frame. Interior walls are gypsum board with wood doors and carpeted floors. This annex contained operations offices and maintenance facilities.

2.4.3 Laboratory Annex

The laboratory annex is a two-story building; the first floor was occupied by numerous laboratories. The second floor houses the heating, ventilation, and air conditioning (HVAC) equipment for the annex, as well as concrete HEPA filter enclosures for the hoods located in the laboratories below. The laboratory annex ventilation system is no longer in service. There are several small steel-on-steel frame, transite-on-steel frame, and partially and fully enclosed structures located on the north side of this annex. These structures housed flammable gas manifolds, and provided compressed gas cylinder storage and regulated/non-regulated drum storage. Currently there are no compressed gas cylinders stored in the laboratory annex.

2.4.4 203A Storage Area

The 203A storage area is a 1.8 m (6 ft) high, reinforced-concrete, diked area surrounding storage tanks used for uranyl nitrate hexahydrate and other acidic solutions. The area is located to the north of the 202A Building and the 211A liquid chemical tank farm. The area is isolated from utilities and other structures that remained at the end of deactivation. Four 378,541 L (100,000 gal) capacity tanks are also located within individual diked sections, and three smaller capacity tanks are located within the diked area. All tanks are empty or flushed in accordance with approved endpoint criteria, with only a minimum heel remaining at the completion of the deactivation project. Adjacent to this diked area is the 203A Building, which is a reinforced-concrete structure used to house pumps and the control room for the 203A Storage Tanks. A rail car and truck loading/unloading station is located on the west side of this area. To the east of the 203A Area is 210A, a metal building that was used to store empty metal drums.

2.4.5 204A Building (U-Cell)

The 204A Building (U-Cell) is a concrete structure (vault), built below grade, with removable concrete cover blocks extending above grade to form the building roof. U-Cell contains four large tanks, two (TK-U1 and TK-U2) of which were used for recovered nitric acid and laboratory waste collection. Currently, U-Cell is accessed through the 202A Sample Gallery.

2.4.6 221A Building (Pipefitter Shop)

The 221A Building (pipefitter shop) was used to support PUREX operations. The building is a stand-alone, slab-on-grade, one-room, wood-framed structure with metal siding. A roll-up door provides equipment access on the east side of the building and a personnel door is located on the west side. No active utilities are provided in the deactivated building.

The building is controlled as a radiological materials storage area and is used to support activities at PUREX and provides space for the following:

- Interim storage and staging of miscellaneous radiological waste containers
- Maintenance area for controlled equipment (ventilation equipment) associated with the PUREX Facility

- Storage of non-contaminated equipment (filters) used for S&M of the PUREX Facility
- Storage of laundered and unlaundered PPE

An area north of the 221A Building and an area south of the deep-bed filters also serve to stage LLW for Disposal.

2.4.7 276A Building (R-Cell)

The 276A Building (R-Cell) is a concrete structure (vault), built below grade, with removable concrete coverblocks extending above grade to form the building roof. R-Cell provided organic solvent decontamination and storage. Currently, R-Cell is accessed through the 202A Sample Gallery (R-Cell centrifuge platform) or through the PR corridor (R-Cell vault floor).

2.4.8 218-E-14 (Storage Tunnel 1)

General Electric designed and constructed Storage Tunnel 1 in 1956 as part of PUREX Facility construction. Between 1960 and 1962, eight railroad cars carrying failed equipment were stored in Storage Tunnel 1 (see Figure C-16). The layout of the PUREX Storage Tunnels is shown in Figure 2-3.

The main portion of Storage Tunnel 1 is 109.1 m (358 ft) long and is composed of two sections. The inside dimensions of the storage tunnel, for both sections, are:

- Height: 6.7 m (22 ft)
- Width: 5.8 m (19 ft)

On the east side of the tunnel, the first 31.4 m (103 ft) facing south is composed of a 0.91-m (3-ft) thick reinforced-concrete wall, which allowed for the later construction of Storage Tunnel 2 without disturbing Storage Tunnel 1. The remaining 77.7 m (255 ft) length portion of the east wall, the entirety of the west wall, and the roof are all composed of 0.30 m x 0.36 m (12 in x 14 in.) creosote-treated timbers. The same types of timbers are used in both sections. All exterior surfaces of the timber structure are covered with mineral-surfaced, asphalt-coated roofing felt. The entire structure is covered with earth fill to provide a minimum cover of 2.4 m (8 ft) for radiation shielding.

The materials used in the construction of Storage Tunnel 1 were controlled by the original drawings and specifications given in GE 1955, *Specifications for Disposal Facility for Failed Equipment*.

The storage section of Storage Tunnel 1 is sloped at a 1 percent grade to the south. A concrete plenum structure at the south end of the tunnel originally had a HEPA-filtered exhaust system, which is now deactivated. The plenum served as an observation point during filling of Storage Tunnel 1 with engineered grout; the subsurface volume of the plenum is now filled with the grout.

In May 2017, a roughly square section of the northern portion of the Storage Tunnel 1 roof collapsed, allowing the roof timbers and the soil overburden above to fall into the interior of the tunnel. The materials fell straight down into the tunnel, followed by the soil overburden, onto position #7, which contained a failed E-F11 waste concentrator. A review of the aerial footage

from the event supports crediting the soil in the mitigated accident analysis; the largest item in the tunnel was indiscernible in any of the known exterior photographs or videos as seen in Figure 2-10.

Figure 2-10. Storage Tunnel 1 Partial Collapse

The immediate remediation activities for the collapse consisted of two parts: filling the hole with Hanford Site local soil and gravel, followed by the emplacement and securing of a temporary plastic barrier over the entire length of Storage Tunnel 1.

Grout stabilization of Storage Tunnel 1 began in October 2017, and was documented as complete on November 16, 2017 in CHPRC-03519, Rev 1, *PUREX Tunnel 1 Stabilization Acceptance Specification*.

In total, over 3,300 m^3 of engineered grout was pumped into the tunnel, on both sides of the earthen mound at the collapse site. In its final state, all of the stored equipment in Storage Tunnel 1 is covered, encased by grout. This effectively removes the possibility of releases due to any further collapse of Storage Tunnel 1, or other events such as fires, aircraft crash penetrations, etc. Therefore, although the radiological and chemical inventories within Storage Tunnel 1 remain as they were, they are no longer treated as MAR. This is reflected in the revised accident analyses in Section 3.4.

2.4.9 218-E-15 (Storage Tunnel 2)

Construction of Storage Tunnel 2 was started in 1964 and completed in 1966. The storage tunnel is currently deactivated with no access provided.

Storage Tunnel 2 consists of the following three areas: the water-fillable shielding door, the storage area, and the ventilation shaft. For deactivation, water was removed from the water-fillable shielding door, and the door was sealed. The ventilation shaft for the former HEPA-filtered exhaust stack is located at the south end of Storage Tunnel 2. Storage Tunnel 2 does not provide for an inlet air supply. The ventilation shaft has been sealed and capped, and the exhaust fan abandoned in place. Figure 2-8 shows a cross section view of Storage Tunnel 2.

The nominal inside dimensions of Storage Tunnel 2 are as follows:

- Length: 514.5 m (1,688 ft)
- Width: 10.4 m (34 ft)
- Height: 7.9 m (26 ft)

The storage portion of Storage Tunnel 2 extends southward from the water-fillable door, and is sloped at a 0.1 percent grade to the south, to ensure that the rail cars remain in their storage position. This portion consists of a steel semicircular-shaped roof of 0.5-cm (0.2-in.) thick steel plate. It is supported by internal I-beam wales that are attached to external reinforced-concrete arches. The interior and exterior surfaces of the steel roof are coated with a bituminous coating compound to inhibit corrosion. The entire storage area is covered with 2.4 m (8 ft) of earth fill to serve as radiation shielding.

Beginning at the ends of the rail ties, the earth floor is sloped upward on a 1 (vertical) to 1-1/2 (horizontal) grade on the east and west sides of the tunnel. A railcar bumper is located 2.4 m (8 ft) from the south end of the tracks to act as a stop. The nominal capacity of the storage area is forty 12.8-m (42-ft) long railcars; there are 28 rail cars in Storage Tunnel 2 (see Figure C-17).

Potential degradation of PUREX Storage Tunnel 2 concrete due to gamma irradiation was evaluated and based on the dose calculations performed in CHPRC-1204181, "Estimated PUREX Tunnels Concrete Dose," the gamma radiation exposure to the storage tunnel structures was determined to be below the threshold of concern established in INEEL/EXT-04-02319, *Literature Review of the Effects of Radiation and Temperature on the Aging of Concrete*. The effects of neutron radiation were not evaluated. The source term in the storage tunnels is predominantly from fission products, most of which emits gamma from ^{137}Cs.

2.5 Structures, Systems, and Components

Active systems at PUREX are limited to the electrical distribution, exhaust ventilation, instrumentation systems, and fire detection/alarms systems in 252AB and 217A.

2.5.1 Electrical System

The legacy electrical system used for chemical processing at PUREX has been isolated/disconnected prior to the 252A substation (HNF-SD-CP-HIE-004).

Two electrical substations (252AB and 252AC) provide power to the PUREX Facility during post-deactivation S&M. One substation (252AB) has 1,500 kVA of electrical power to each of two busses, which provide power to the following:

- Operating and Standby Canyon Exhaust Fans
- 292AB Stack Monitoring Building
- 291AE Filter Building
- 291-A-1 Monitoring System
- 241-A-302A East Tank Farms monitoring station

- Surveillance and Monitoring Control System (SAMCONS) Instrument and Control (I&C) skid

In addition, electric heat is provided to the 291AE and 292AB Buildings to protect instrumentation during cold weather. Cooling is provided to the 292AB Building during warm weather to prevent the instrumentation from overheating.

The 252AC substation is powered from either of the two 1,500 kVA busses through a transfer switch and supplies 750 kVA of electrical power to dedicated surveillance lighting throughout the facility. Figure 2-11 illustrates the key elements of the electrical system.

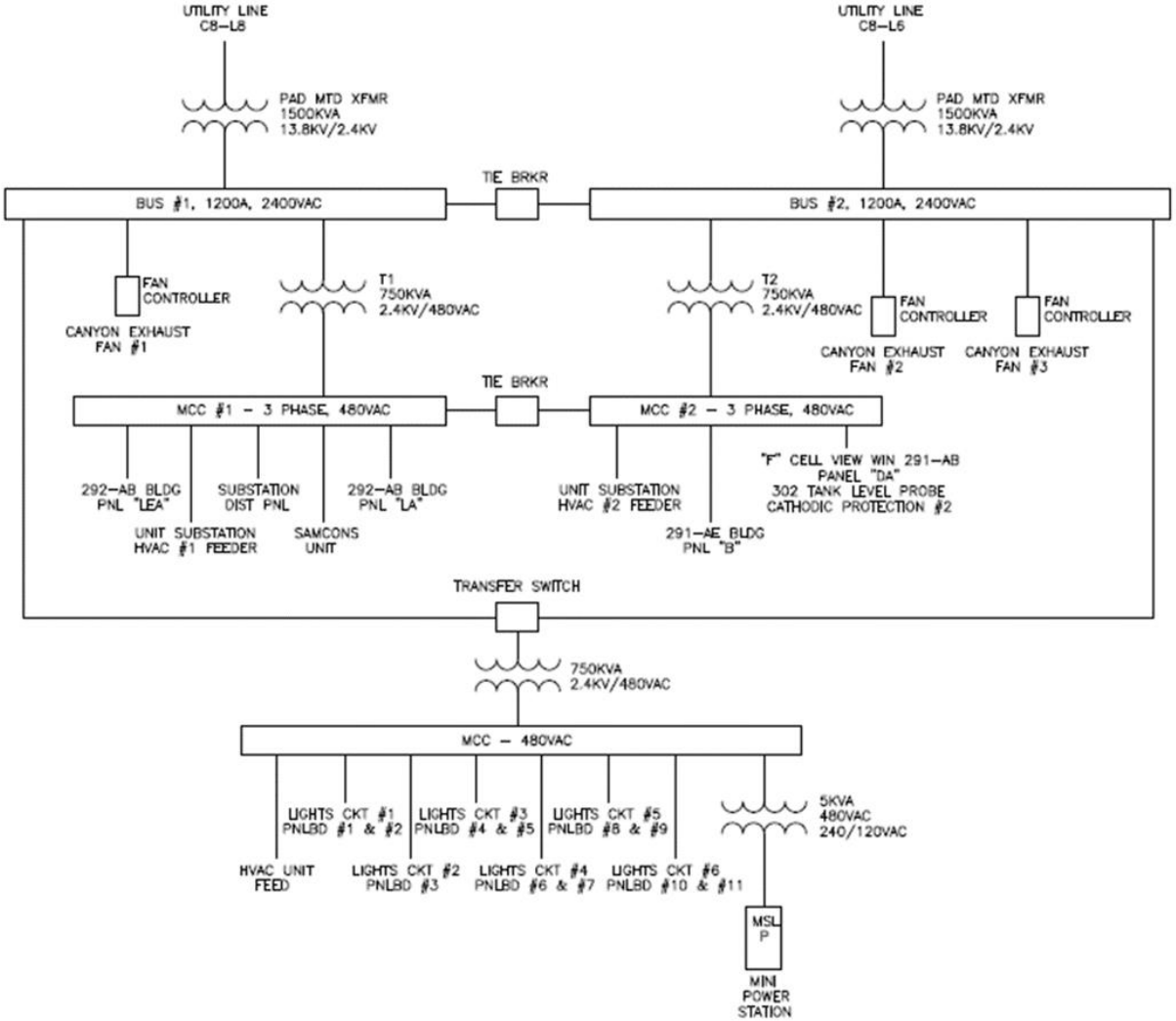

Figure 2-11. The PUREX Facility Electrical System

2.5.2 Ventilation System

The PUREX deactivation project reduced the four separate ventilation systems in the original facility configuration to one cascaded flow scheme, and the original 13 effluent points from the PUREX Facility and storage tunnels were reduced to one main exhaust stack. Of the 177 fans in the facility, only two main exhaust fans (one active and one on standby) continue to function. A third main exhaust fan has been abandoned-in-place. No supply fans are operational. Therefore, with the exception of the active portions of the 202A HVAC described here, all PUREX ventilation systems (including HEPA filters and stacks) are capped/isolated to prevent unintended releases to the atmosphere.

HNF-SD-CP-CR-037, *PUREX Heating, Ventilation, and Air Conditioning Consolidation Document*, provides a more detailed description of the HVAC system in the deactivated PUREX Facility.

The 202A Building ventilation system is an active system that provides a reduction in the release of hazardous material to the environment and the public. The building is maintained at a negative air pressure relative to the environment and exhaust air is filtered. The exhaust system has been determined to be a general-service feature and is not classified as a Safety Class (SC), an SS, or a DID safety system. Requirements that drive the operation, sampling, and monitoring of the exhaust system are driven by applicable Federal and State of Washington, Department of Health (WDOH) requirements.

The 202A Building, including U- and R-Cells, is ventilated by cascading systems into the canyon ventilation system. A negative pressure will continue to be maintained inside the 202A Building process canyon with the exhaust through the 61 m (200 ft) stack. Airflow through the canyon galleries is routed to the canyon. Openings were made in existing gallery rooms and closed ventilation duct systems so a cascade-type airflow supports the building exhaust ventilation system. The ventilation system will continue to flow air from clean areas to progressively more contaminated areas. Figure 2-12 is a flow diagram of the consolidated ventilation system.

The supply fans for the 202A and 271AB annexes were shut down as part of the plant deactivation process. Building ventilation air enters through the existing ventilation annex supply ducts into the P&O gallery, sample gallery, and storage galleries. The supply fans were disconnected and controlling dampers were installed on the inlets. One of the 291A exhaust stack 2.4-kV motor-driven fans operates to draw air through the 202A Building. One additional backup motor-driven fan may be used should the first fan fail or otherwise be out of service. The ventilation system flow rates for the modified system are in the nominal range of 30,000 to 45,000 cfm, which is about 15 percent of the original capacity.

The air flows into the P&O gallery in the center of the building, flows through the White Room at the west end of the P&O gallery and is routed to the canyon deck through the canyon lobby (Figure 2-13). The airflow into the sample gallery enters at the center of the gallery and is routed to the canyon craneway via the stairwell at the northeast end of the building. The airflow into the storage gallery enters the center of the gallery, cascades through the Q-Cell, PR room, and N-Cell glovebox rooms, into the hot shop, and is tied into the air tunnel. Wherever possible, the engineered ventilation path cascades through portions of the existing ductwork and through as much of the building as possible. New ductwork and control louvers were installed to provide

control and to maintain airflow, preventing contamination movement into the clean areas of the plant.

The air flowing into the canyon from the P&O and sample galleries flows downward into the process cells in the spaces around the coverblocks on the canyon deck. The air then flows into the air tunnel through air holes in the walls at the bottom of each cell, where it combines with the sample gallery airflow. The air tunnel exhausts through an underground duct to Deep-bed Filter 2, Filter Building 4, and the exhaust fan. The air tunnel then discharges through the 61 m (200 ft) main stack to the atmosphere. Filter Housings 1 and 2 have been isolated and bypassed. See Figures 2-12 and 2-13.

The major portions of the 202A Building HVAC system that remain active are Deep-bed Filter 2, portions of Filter Bank 4 (291-A-1 Stack HEPA filters in the 291AE Building), 291A electric exhaust fans, air tunnels, 292AB Building, and sampling instrumentation. Service areas, including the process and canyon blower rooms, the compressor room, office areas, and AMU are not ventilated. All ventilation to the laboratory area has been shut down.

A 2.4-m (8-ft) wide by 2.4-m (8-ft) high reinforced-concrete exhaust air duct connects the 202A Building to Deep-bed Filter 1 (bypassed) and deep-bed filter 2 located in the south yard area and is composed of below-grade concrete exhaust air treatment and discharge equipment.

The overall dimensions of the Deep-bed Filter 2 area are:

- Length: 25.0 m (82 ft)
- Width: 15.9 m (52 ft)
- Depth: 4.0 m (13 ft)

Deep-Bed Filter 2 was designed to remove 99.9 percent of the particulates from the air stream. The filter area has two glass-fiber bed sections: the pre-filter and the cleanup filter. The pre-filter bed consists of five separate layers, each packed with a different density of fiberglass. The cleanup filter beds consist of 132 deep-bed filter units each 2.5 cm (1 in.) thick. Liquid condensate from the filter collects in Catch Tank V-11-10-1.

In 1999, a cover of shotcrete over Deep-Bed Filter 2 was installed to minimize water infiltration due to run-on and run-off.

The 291AE Filter Building is a reinforced-concrete building, which houses 10 modular filter units, each with upstream and downstream isolation dampers. A typical modular filter unit consists of a stainless-steel housing containing an inlet damper, an in-place-filter testing assembly, two banks (primary and secondary) of 4 x 3 arrays of HEPA filters, and an outlet damper. During S&M, three filter arrays remain operable, two of which are operating, with the third in reserve. The remaining filter arrays are not generally ready to be placed into service.

Two reinforced-concrete air ducts are located below the 291AE Building, parallel to each other and running in the north-south direction. The west duct is an inlet air duct connected to the underground air duct from Deep-bed Filter 2. The east duct is the discharge air duct from the HEPA filter units and connects with the aboveground, reinforced-concrete exhaust air plenum. Attached to the south side of the building is a 2.7 m (9 ft) high metal building, which houses the mechanical and electrical equipment and is the entrance vestibule for the 291AE Building.

The 291A Exhaust Plenum and Fan Area consists of an underground air duct connected to the 291AE Discharge Air Duct and an aboveground segment that houses three electric-motor-driven ventilation fan units discussed above. The walls and floor are constructed of reinforced-concrete. The 2.4-kV motor-driven fans are located on the south side of the aboveground plenum segment.

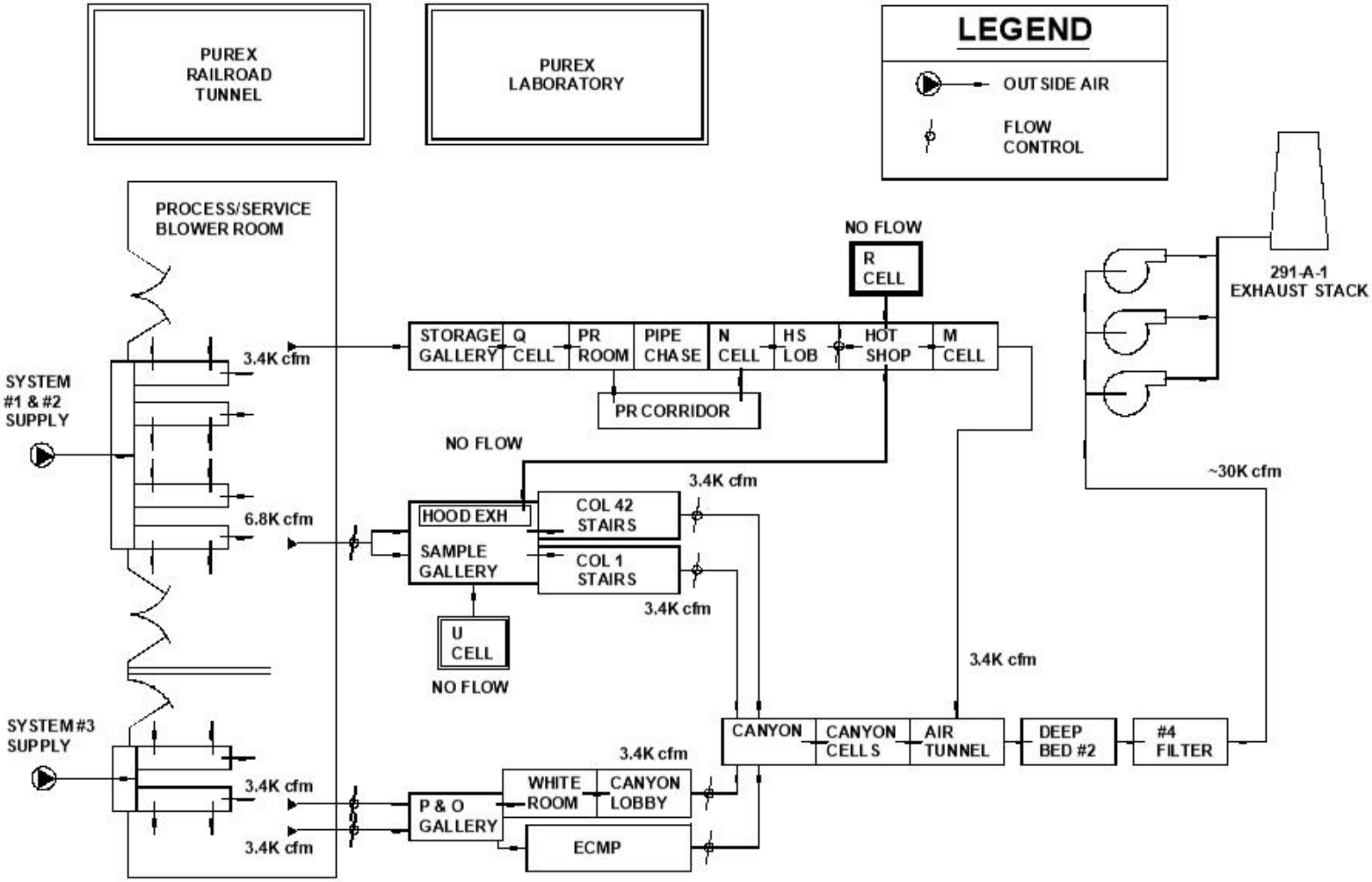

Figure 2-12. PUREX HVAC System Flow Diagram

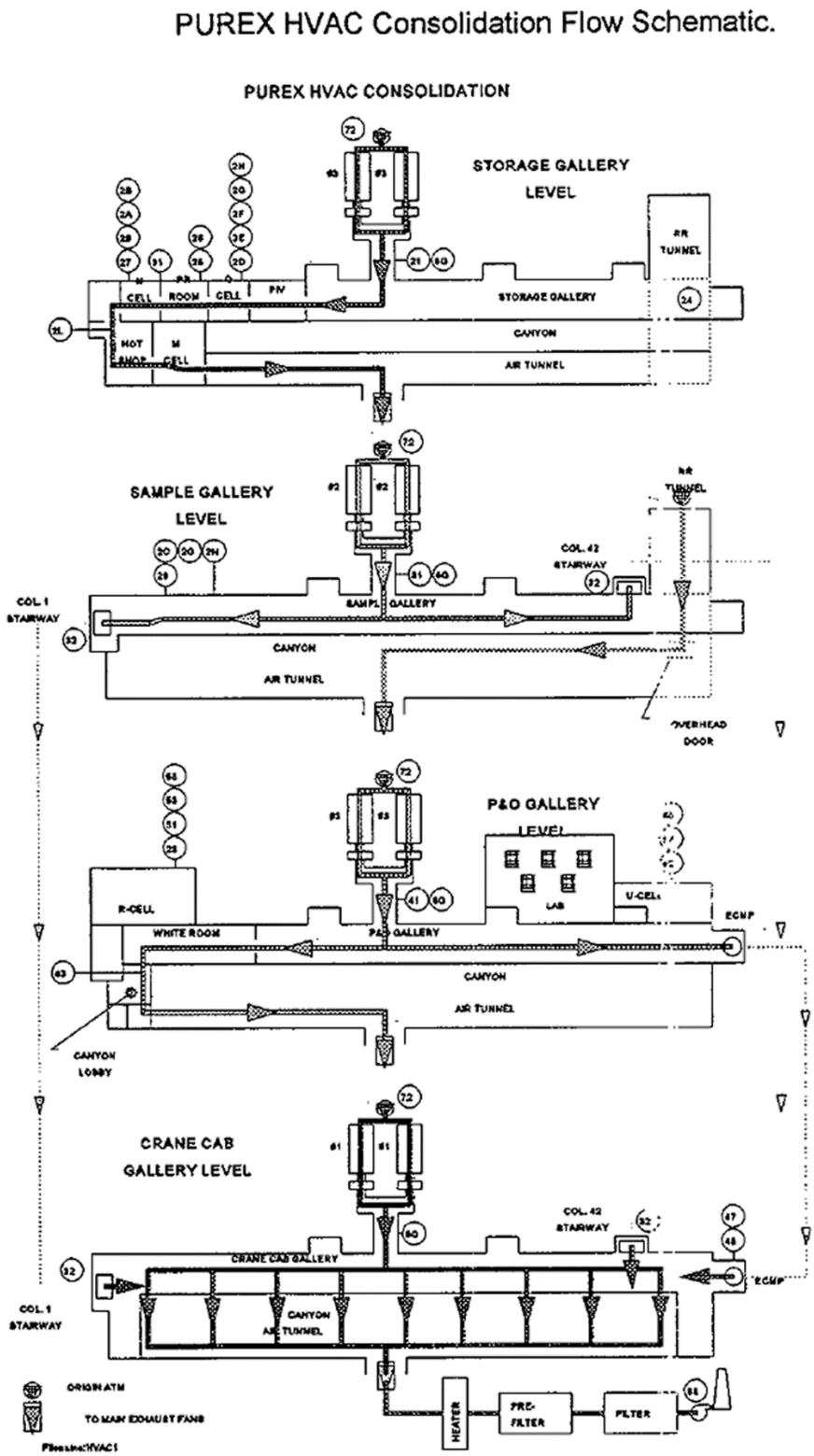

Figure 2-13. HVAC Consolidation Flow Schematic

The 291-A-1 main stack is of reinforced-concrete construction and rises 61 m (200 ft) above grade. The stack has a free-standing, 2.1 m (7 ft) inner diameter, stainless-steel liner. The top of the liner is covered to protect the annulus between the stack and the liner. The liquid condensate from the stack collects in Catch Tank 216-A-TK2. The 291-A-1 Stack is registered under FF-01 with the WDOH and is approved by the U.S. Environmental Protection Agency as a potential radionuclide emitter and as a major stack under 40 CFR 61, "National Emissions Standards for Hazardous Air Pollutants," Subpart H, and WAC 246-247, *Radiation Protection – Air Emissions*. Other stacks used during operations have been deactivated.

The 291-A-1 Stack is addressed in the Hanford Site air operating permit in compliance with 40 CFR 70, "State Operating Permit Programs," and WAC 173-401, *Operating Permit Regulations*. The Hanford Site air operating permit is administered by the State of Washington, Department of Ecology (Ecology). Ecology oversees criteria and toxic airborne emissions compliance and WDOH oversees radioactive airborne emissions compliance.

The 292AB Building is a two-story metal building. The second floor is constructed on metal grate, with a metal plating over approximately 80 percent of the floor area. The building is an enclosure for stack sampling equipment.

2.5.3 Surveillance and Monitoring Control System (SAMCONS) Unit

A SAMCONS I&C skid unit (217A), located south of the 202A Building, serves as the main data acquisition center for monitoring ventilation exhaust airflow data. This unit processes the status of key operating systems including exhaust fan and motor operating parameters, filter differential pressures, and damper positions.

In addition, the SAMCONS unit provides automatic notification to key individuals of system alarms and failures, and remote readout and control capability for PUREX systems and components associated with the SAMCONS.

2.5.4 Water Systems

All water systems have been isolated from the PUREX Facility with the exception of several fire hydrants as identified in the Fire Hazards Analysis (FHA), CP-41822, *Fire Hazard Analysis for Plutonium-Uranium Extraction Plant*.

2.5.5 Fire Systems

There are no fire suppression systems still active in the facility. Fire detection/alarm systems are active in only 252AB and 217A as discussed in the FHA.

3.0 Hazards and Accident Analyses

This chapter presents the results of the safety analysis performed for the PUREX Facility. The analysis was performed to evaluate current S&M activities as well as potential decommissioning activities. Prior to initiating any D&D of HC 3 or greater structures, a USQ review, and possibly a new HA and safety basis revision will be generated.

The purpose of the analysis is to systematically identify and evaluate the hazards associated with the current and potential decommissioning activities at the PUREX Facility. The analysis is intended to meet the guidance and/or requirements of the following documents:

- DOE-STD-1027-92, *Hazard Categorization and Accident Analysis Techniques for Compliance with DOE Order 5480.23, Nuclear Safety Analysis Reports*
- DOE-STD-1120-2016, *Preparation of Documented Safety Analysis for Decommissioning and Environmental Restoration Activities*

The analysis and development of this DSA was completed using the guidance of DOE-STD-1120-2016. Therefore, this DSA provides for compliance with the expectations of 10 CFR 830.

3.1 Summary of Hazards

The PUREX deactivation project removed, reduced, or stabilized the major radioactive sources and waste within the PUREX Facility. Radiological contamination throughout the PUREX Facility consists of uranium, plutonium and other TRU elements, and/or mixed fission products. The conservatisms used in developing the plutonium and americium inventory bounds any other TRU elements (e.g., neptunium) that may be present. The radioactive material inventory remaining at the end of deactivation is primarily in the form of contaminated equipment and surfaces (primarily within the processing cells), dust and debris, with some remaining plutonium and oxide dust stabilized in gloveboxes.

3.1.1 Radioactive Material Inventory

Based on guidance provided in Appendix A of HNF-EP-0063, *Hanford Site Solid Waste Acceptance Criteria*, daughter fission products, such as ^{90}Y and ^{137m}Ba, are not included in the inventory used for the accident analyses in this DSA. The guidance states that daughter fission products with half-lives less than 10 days (e.g., ^{90}Y has a half-life of approximately 64 hr, ^{137m}Ba has a half-life of approximately 2.6 min) whose parent radionuclide half-life is greater (e.g., ^{90}Sr has a half-life of approximately 29 yr) are not reportable as separate isotopes. The dose contributions from the daughter products are captured in the conversion factor from curie (Ci) to dose equivalent curie (DE-Ci).

To assist in avoiding confusion, gram values are shown as dark green throughout this document, DE-Ci values are shown as dark brown, and curies are shown in dark purple.

Appendix C contains additional information related to the inventory values in the tables within this section. This includes, but is not limited to the values provided in the reference documents, the basis for assumed isotopic distributions, unit conversions, and how the material was decayed to 2018.

Table 3-1 summarizes the PUREX inventory in grams, decayed to January 2018.

Table 3-1. PUREX Facility Inventory in Grams, January 2018

Isotope	202A	Deep-Bed Filters	Tunnel 2 202A Items	Tunnel 2 324 Items	Total
^{238}Pu	9	0	23	0	32
^{239}Pu	11,621	338	4,348	21	16,332
^{240}Pu	1,822	53	508	3	2,382
^{241}Pu	32	1	39	0	72
^{242}Pu	38	1	0	0	39
^{241}Am	347	10	55	0	412
^{90}Sr	43	4	65	711	823
^{137}Cs	83	7	129	1,365	1,585
Pu	**13,521**	**393**	**4,918**	**25**	**18,857**
Cs/Sr	**126**	**11**	**194**	**2,076**	**2,408**
Total	**13,994**	**414**	**5,167**	**2,102**	**21,677**

Table 3-2 summarizes the PUREX inventory in DE-Ci, decayed to January 2018. The use of DE-Ci normalizes isotopes for a ^{239}Pu inhaled dose equivalency.

Table 3-2. PUREX Facility Inventory in DE-Ci, January 2018

Isotope	202A	Deep-Bed Filters	Tunnel 2 202A Items	Tunnel 2 324 Items	Total
^{238}Pu	139	4	362	0	505
^{239}Pu	722	21	270	1	1,014
^{240}Pu	415	12	116	1	543
^{241}Pu	59	2	73	1	133
^{242}Pu	0	0	0	0	0
^{241}Am	999	29	159	1	1,187
^{90}Sr	3	0	4	47	54
^{137}Cs	1	0	1	11	13
Pu	**1,334**	**39**	**820**	**3**	**2,195**
Cs/Sr	**3**	**0**	**5**	**58**	**67**
Total	**2,337**	**68**	**984**	**62**	**3,450**

3.1.1.1 202A Building

As part of the hazards assessment and categorization process, an estimate of the total remaining radioactive material within the PUREX Facility was performed. This estimate was based on the

best available data, process knowledge, and experience. The high-end estimates are considered conservative and bounding, based on the data available. See Appendix C for additional details on the basis for the inventory values provides.

Tables 3-3 and 3-4 provide a summary of the PUREX Facility inventory, as measured and estimated during the PUREX deactivation project. Storage Tunnel 1 is not included as the material is no longer at risk. Values for Storage Tunnel 1 can be found in Section 3.2.1 or in Appendix C.

For conservative estimated values, an isotopic distribution was assumed to be characteristic of N-Reactor Mark 1A fuel at 180 days after irradiation to 3,000 Megawatt-days per metric ton of Uranium (MWd/t), not including the short-lived (i.e., less than 1-yr half-life) nuclides (i.e., this is the bounding irradiated fuel).

Table 3-3 summarizes the 202A inventory in grams, decayed to January 2018.

Table 3-3. 202A Inventory in Grams, January 2018

[grams]	L-Cell	N-Cell	PR Room	White Room	202A Remainder	202A Total
^{238}Pu	3	1	1	0	3	9
^{239}Pu	3,863	1,610	1,207	435	4,507	11,621
^{240}Pu	613	258	188	66	696	1,822
^{241}Pu	11	4	3	1	12	32
^{242}Pu	13	5	4	1	15	38
^{241}Am	116	48	36	13	134	347
^{90}Sr	0	0	0	0	43	43
^{137}Cs	0	0	0	0	83	83
Pu	**4,502**	**1,879**	**1,403**	**503**	**5,234**	**13,521**
Cs/Sr	**0**	**0**	**0**	**0**	**126**	**126**
Total	**4,619**	**1,927**	**1,439**	**516**	**5,494**	**13,994**

Table 3-4 summarizes the 202A inventory in DE-Ci, decayed to January 2018. The use of DE-Ci normalizes isotopes for a ^{239}Pu inhaled dose equivalency.

Table 3-4. 202A Inventory in DE-Ci, January 2018

[DE-Ci]	L-Cell	N-Cell	PR Room	White Room	202A Remainder	202A Total
^{238}Pu	46	20	14	5	54	139
^{239}Pu	240	100	75	27	280	722
^{240}Pu	140	59	43	15	159	415
^{241}Pu	19	8	6	2	23	59
^{242}Pu	0	0	0	0	0	0
^{241}Am	335	138	103	37	386	999
^{90}Sr	0	0	0	0	3	3
^{137}Cs	0	0	0	0	1	1
Pu	445	187	138	49	516	1,334
Cs/Sr	0	0	0	0	3	3
Total	781	324	241	86	905	2,337

3.1.1.2 PUREX Storage Tunnel 2

Table 3-5 provides a summary of the MAR within Storage Tunnel 2. The inventory within Storage Tunnel 1 is no longer considered MAR, therefore it is not shown. See Section 2.4.8 for details.

Table 3-5. PUREX Storage Tunnel 2 Inventory, January 2018

[Grams]	202A Items	324 Items	Total	[DE-Ci]	202A Items	324 Items	Total
^{238}Pu	23	0	**23**	^{238}Pu	361	0	**361**
^{239}Pu	4,348	21	**4,369**	^{239}Pu	270	1	**271**
^{240}Pu	508	3	**511**	^{240}Pu	115	1	**116**
^{241}Pu	39	0	**39**	^{241}Pu	73	1	**74**
^{241}Am	55	0	**55**	^{241}Am	159	1	**160**
^{90}Sr	65	711	**776**	^{90}Sr	4	47	**51**
^{137}Cs	129	1,365	**1,494**	^{137}Cs	1	11	**12**
All Pu	**4,918**	**25**	**4,943**	**All Pu**	**819**	**3**	**822**
All Cs/Sr	**194**	**2,076**	**2,270**	**All Cs/Sr**	**5**	**58**	**63**
Total	**5,167**	**2,102**	**7,269**	**Total**	983	62	**1,045**

The inventory for PUREX Storage Tunnels was originally developed in Appendix B of HNF-SD-CP-HIE-002, *Plutonium-Uranium Extraction (PUREX) Facility Storage Tunnel Hazard Analysis.* The inventory was developed based on a review of the data regarding the Ci

estimated for the PUREX equipment storage locations. In HNF-SD-CP-HIE-002, process knowledge of the PUREX process was used to identify the isotopic distribution of the estimated inventory from the PUREX equipment (see Section C.2). This isotopic distribution, corrected for decay, is used for the HC and consequence analysis.

For evaluation of the final HC for the PUREX Facility, only the TRU isotopes and the dominant fission product isotopes, ^{90}Sr and ^{137}Cs, are included; the inventories have been decay-corrected to January 2018. These isotopes are the major contributors to dose, with the other isotopes estimated to result in an increase of less than 1 percent in the total dose. The isotopes including ^{60}Co, ^{90}Y, ^{129}I, ^{154}Eu are excluded. A summary of the total dispersible inventory of the storage tunnels used for the HC determination and the consequence analysis is presented in Table 3-5.

An additional consideration for 324 Building hot cell wastes stored within Storage Tunnel 2 is radiolytic hydrogen production within the packaged wastes (from degradation of any bound water or organic materials within the waste), and from the concrete of the burial box within which the steel canisters are housed. CHPRC-NS-17-003, "Email Discussion of 324 Building Hot Cell Stored Waste Radiolytic Hydrogen Production in PUREX Storage Tunnel 2" states that a maximum, conservatively-calculated hydrogen production rate at the time of emplacement of the 324 Building wastes was 120 L/day. The waste containers, the stainless-steel liner box, and the concrete burial box are each equipped with HEPA-filtered vents, with a gas flow path into the tunnel airspace, allowing for diffusion and dispersion throughout the large air volume of the tunnel.

In 23 years of continuous radiation exposure, it is not considered likely that any significant amounts of material remain within the wastes themselves that can degrade and release hydrogen, nor would the hydrogen production from the concrete burial box itself be anywhere near as large as when first emplaced. In addition, with no access to the tunnel possible, and no utilities or active energy sources available within the tunnel to provide a source of ignition for any hydrogen accumulations (except the low-voltage lighting and monitoring equipment to be used within the tunnel prior to and during stabilization), a hydrogen explosion is not thought to be possible in the present day. When Storage Tunnel 2 is stabilized by filling with engineered grout, the gas flow path will be obstructed, but with negligible hydrogen production and even less likelihood of ignition, it is not considered to represent a problem. Therefore, a new event for a hydrogen explosion has been added to the HA given in Appendix A, in which the frequency is "Beyond Extremely Unlikely," leading to Moderate consequences for all receptors. (Note that the initial analysis at time of waste entry into the tunnel considered a hydrogen explosion event "Extremely Unlikely"). This Beyond Extremely Unlikely (BEU) does not require further analysis or application of controls.

3.1.2 Hazardous Chemical and Toxic Material Inventory

Hazardous materials that remain are a relatively minor risk, as there are no substantial volatiles, caustics, or reactives remaining. Former process solution and stocks of other unused solutions and dry chemicals were removed as part of deactivation. Only residual quantities of chemicals remain in the tanks, vessels, and piping systems that were pumped, emptied, and/or flushed during deactivation. A summary of the remaining inventory of hazardous materials is provided in Appendix C.

3.1.3 Industrial Hazards

The PUREX Facility is in S&M and is not normally occupied. Entries to the building are periodically made for inspections, maintenance activities, and other activities described in Section 2. Industrial hazards associated with these entries are the hazards associated with entry to any large industrial facility that is not normally occupied. Hazards associated are mitigated by the SMPs described in Chapter 7.0.

3.2 Nuclear Facility Hazard Categorization

3.2.1 Hazard Category

Using the inventory values identified for the PUREX segments in Table 3-1, the HC of each segment was calculated with the 2018 decayed values using the guidance in DOE-STD-1027-92. All segments reviewed exceeded the HC-2 threshold as shown in Table 3-6. The Deep-Bed Filters are included with the 202A inventory.

Table 3-6. PUREX Hazard Categorization

Isotope	HC 2 [g]	202A Grams	202A HC 2 Ratio	Tunnel 1 Grams	Tunnel 1 HC 2 Ratio	Tunnel 2 Grams	Tunnel 2 HC 2 Ratio
^{238}Pu	3.60E+00	9	2.52E+00	---	---	23	6.38E+00
^{239}Pu	9.00E+02	11,959	1.33E+01	1,014	1.13E+00	4,369	4.85E+00
^{240}Pu	2.47E+02	1,874	7.59E+00	---	---	511	2.07E+00
^{241}Pu	2.80E+01	33	1.16E+00	2	5.36E-02	39	1.41E+00
^{242}Pu	1.51E+04	39	2.56E-03	---	---	0	5.03E-07
^{241}Am	1.60E+01	357	2.23E+01	---	---	56	3.47E+00
^{90}Sr	1.60E+02	46	2.90E-01	5	3.19E-02	777	4.85E+00
^{137}Cs	1.00E+03	91	9.08E-02	10	9.80E-03	1,494	1.49E+00
Total	---	---	**4.73E+01**	---	**1.22E+00**	---	**2.45E+01**

3.2.2 Criticality

In accordance with the requirements of HNF-7098, *Criticality Safety Program*, the 202A Building at PUREX is classified as a Limited Control Facility. This is due to the inventory exceeding one-half of a minimum critical mass, but a criticality has been determined to be incredible due to the physical form and distribution of the fissionable material, and controls are required to protect the declaration of incredibility. More information can be found in the following Criticality Safety Evaluation Report (CSER):

- WHC-SD-SQA-CSA-511, *CSER 96-012, Criticality Safety Evaluation Report and Quick Screen Facility Re-classification and Criticality Alarm System Shutoff for De-activated PUREX*

Grouting operations and continued storage in the PUREX Tunnels are exempt from criticality safety control. This conclusion was determined from the analyses in the following CSER:

- CHPRC-03416, CSER 17-002, *Criticality Safety Evaluation Report – Grouting PUREX Tunnels*

3.3 Hazard Analysis

The HA, including discussions of the methodology and HA results, is given in Appendix A.

The preliminary HA was performed for those buildings and structures with sufficient inventory and energies to present a potential for release. The evaluation was performed by first postulating an event involving a specific hazard (e.g., fissionable material) at a specific location (e.g., canyon area).

The engineered controls (SSCs) and ACs that would serve to prevent or mitigate the event were then identified. The identification of controls was based primarily upon a review of available facility and operations documentation and by consulting experienced facility personnel.

The frequency and consequence categories used by the HA team are given in Table 3-7 and Table 3-8. The consequences identified in the HA are based on consideration of the MOI and the 100 m (328 ft) CW receptors. Also addressed in the HA are the hazards to the FW.

Using the scenario frequency and consequence categories assigned by the HA team from the HA process, the overall risk is determined using Table 3-9. Any scenarios identified as a risk bin value of III or higher in overall risk are candidates for quantitative consequence analysis as design basis accidents (DBA). The HA is presented in Appendix A.

3.3.1 Evaluation Guideline

If the unmitigated release consequence exceeds the EG (25 rem), SC controls shall be applied to prevent the accident or mitigate the consequences to below the EG. If unmitigated off-site doses between 5 rem and 25 rem are calculated (i.e., challenging the EG), SC controls should be considered, and the rationale should be described for decisions on whether or not to classify controls as SC.

Per DOE-STD-3009-2014, the EG is established for the purpose of identifying and evaluating the effectiveness of needed SC SSCs. The 25 rem TED EG is not a safety standard because it does not define an acceptable or unacceptable dose from an accident. The 25 rem EG is a criterion used by DOE to help identify and define what measures and controls are necessary.

Table 3-7. Qualitative Frequency Classification

Description	Likelihood Range (per yr)	Definition
Anticipated (A)	Greater than 10^{-2}	Events that may occur several times during the lifetime of the facility.
Unlikely (U)	Between 10^{-2} and 10^{-4}	Events that are not anticipated to occur during the lifetime of the facility.
Extremely Unlikely (EU)	Between 10^{-4} and 10^{-6}	Events that will probably not occur during the lifetime of the facility.
Beyond Extremely Unlikely (BEU)	Less than 10^{-6}	All other accidents.

Table 3-8. Consequence Thresholds

Consequence Level	Public	Co-located Worker	Facility Worker
High (H)	25 rem or more	100 rem or more	Prompt death, serious injury, or significant radiological and chemical exposure.
Moderate (M)	Between 5 rem 25 rem	Between 25 rem and 100 rem	No distinguishable threshold.
Low (L)	Less than 5 rem	Less than 25 rem	No distinguishable threshold.

Table 3-9. Qualitative Risk Ranking Bins

Consequence Level	BEU	EU	U	A
High	III	II	I	I
Moderate	IV	III	II	II
Low	IV	IV	III	III

3.3.2 Facility Worker

Impacts of evaluated hazards on the FW were considered. A qualitative evaluation of the unmitigated consequence to the FW was performed based on the criteria specified in DOE-STD-3009-2014, Section 3.1.3.1.

3.3.3 Chemical Consequence Levels

In those cases where significant chemical releases are postulated, chemical consequences and threshold levels would be developed using DOE-STD-3009-2014. The PUREX Facility is deactivated and no longer maintains bulk chemical inventories; therefore, the HA team did not identify any hazards that would result in significant chemical releases.

3.3.4 Environmental Consequence Levels

The team qualitatively assessed impacts to the environment based on the criteria in Table 3-10. There are no events identified with environmental "Y" consequences.

Table 3-10. Hazard Analysis Environmental Consequence Categories

Consequence Category	Environmental Effects
Y	The release is qualitatively judged to create potential for significant future groundwater contamination or create the need for significant offsite soil remediation (e.g., 1.0 rem MOI).
N	Lesser radiological releases are marked "N" because typical hazards at CHPRC facilities result in the hazards to the environment tracking consistently with the impacts to the CW and MOI receptors, and the hazard controls established for the CW and MOI are also effective for the environment.

The scenarios identified as candidates for quantitative consequence analysis in the original HA are presented in Table 3-11. The preliminary risk bin values were based on the qualitative judgment of the HA team at the time. The preliminary bounding risk bin values were based on a qualitative review and, therefore, may be different than the quantitative risk bin values determined in the accident analyses.

Storage Tunnel 1 has been filled with grout as of November 2017 and the inventory within is no longer at risk (MAR). The crane drop accident has been changed to Storage Tunnel 2, and the Storage Tunnel Fire accident has been deleted as it is not credible in Storage Tunnel 2.

Table 3-11. Scenarios Originally Selected for Quantitative Review

ID	Hazardous Condition	Preliminary Bounding Risk Bin Values (CW/MOI)	Accident Analysis Section
2	Isolated failure of portion of 202A Building from vehicle impact or crane drop	III / III	3.4.1
14	Crane or vehicle accident resulting in failure of Storage Tunnel 1	I / III	3.4.2
22	202A Building aircraft impact	III / IV	3.4.3
10	Container drop resulting in a release of material	III / III	3.4.4
11	Fire involving staged waste	III / III	3.4.5
13	Fire within Storage Tunnel 1	II / III	deleted
4	Localized fire involving limited inventory; N-Cell	III / III	3.4.6
1	Failure of the 202A and Storage Tunnels 1 and 2 building structures from an NPH	I / III	3.4.7

Based on the scenarios selected for quantitative consequence analysis, the scenarios identified in the HA can be evaluated by considering the following representative cases:

- Facility structural failure from natural phenomena hazard (NPH), man-made external events, or operational accidents
- Waste handling scenarios including loss of confinement/spills and fires
- Building/structure fires

3.4 Accident Analysis

The potential dose consequences of the PUREX Facility accidents selected for analysis are determined using RADIDOSE Version 3.0, a dose consequence spreadsheet for the Hanford Site. Dose is reported as TED (rem).

The dose to the CW receptor is evaluated at 100 m (328 ft) from the facility. The nearest site boundary is 15,290 m (9.5 mi) to the west, and is used as the minimum distance to the MOI (ref: Hanford Map Version 2.0).

Airborne Release Fractions (ARFs) and Respirable Fractions (RFs) were developed using guidance from DOE-HDBK-3010-94 whenever possible. For values not found in DOE-HDBK-3010-94, a reference containing a technical basis is provided.

The atmospheric dispersion factor χ/Q accounts for the effects of atmospheric dispersion of material released under postulated accident conditions at a specified receptor location. It is defined as the concentration in air per unit release rate of the material from an upwind source at a particular receptor location, and the unit associated with it is sec/m^3. The value of χ/Q is a function of the type of release (e.g., elevated, buoyant, ground-level, etc.), release duration, wind speed, atmospheric stability class, and distance from the source.

Section 3.2.4.2 of DOE-STD-3009-2014 states a χ/Q value of 3.5E-03 sec/m^3 shall be used for a ground-level release evaluation at the 100 m (328 ft) CW receptor location for accidents that occur inside of or within proximity of a physical structure (the 202A Canyon Building).

A leak path factor (LPF) of 1.0 is used for all unmitigated PUREX Facility accident analyses per Section 3.2.4.1 of DOE-STD-3009-2014. Storage Tunnel 2 accidents (or components of accidents) credit a LPF of 0.5 in the mitigated analysis. The basis for the LPF of 0.5 is that the tunnel soil overburden will mitigate the consequences of tunnel accidents. The tunnel soil overburden accomplishes this by acting akin to a sand filter when the soil falls on top of the equipment and railcars within the tunnel; see Figure 2-10 for an example.

To justify the 0.5 LPF figure, the REDOX Sand Filter is used for comparison: The REDOX sand filter contains 2.0 m (6.5 ft) of filter media (several layers of sand of graded sizes), and it is regularly tested (CPSM-PRO-MN-50717, *REDOX Sand Filter in-place Leak Test (Aerosol Test)*) to ensure a 99.95 percent efficiency rate. Additionally, letter HW-11103, *200 Areas Sand Filter Program*, states that testing of 0.61-m (2-ft)-deep sand filter beds showed efficiencies ranging from 99.3 to 99.5 percent. Because the equipment within the tunnel is large and irregularly-shaped, and the possibility that there may be some open penetrations related to Storage Tunnel 2 stabilization at the time of an accident, efficiencies this high cannot be credited to the Storage Tunnel 2 soil overburden without additional analysis. To account for items within the tunnel not being able to be completely buried, a LPF of 0.5 is conservatively assumed.

Unless stated otherwise, the physical form of the material modeled for releases is a moderately soluble powder, and dose conversion factors were derived from ICRP 68, *Dose Coefficients for Intakes of Radionuclides by Workers-a Replacement of ICRP Publication 61*, and ICRP 71, *Age-dependent Doses to Members of the Public from Intake of Radionuclides – Part 4, Inhalation Dose Coefficients*.

Screenshots of RADIDOSE inputs and outputs are provided in Appendix B.

3.4.1 (SP-1) 202A Crane Drop

3.4.1.1 SP-1 Scenario Development

The 202A Crane Drop accident represents a Loss of Confinement/Spill caused by a large crane losing control of its load and striking contaminated equipment within 202A. This accident bounds any potential load drops from the PUREX canyon cranes, as well as suspended loads over the 202A structure from a crane outdoors.

Within 202A, most of the MAR is located at the bottom of the facility (up to 35 ft. below grade) within canyon remote process cells or in the PR Room and N-Cell areas at the west end of the Storage Gallery level (Figure 2-5 and Figure 2-6). The canyon process cells are designed to be shielded (and protected) on top by 3 ft. thick removable concrete cover blocks. The PR Room and N-Cell areas have a cumulative 6 ft 9 in. of reinforced concrete above them from the roof and gallery floors (H-2-52064).

The PUREX canyon cranes have not been operated in approximately 20 years and there are currently no known plans to remove cover blocks; however, there are also no controls requiring them to be in place. Therefore, for this accident, it is assumed the cover blocks over L-Cell are not in place, exposing the MAR to the direct impact force of a dropped load. The frequency for this event is anticipated as human error is a potential cause.

3.4.1.2 SP-1 Source Term Analysis

The MAR is assumed to be the total inventory for L-Cell as shown on Table 3-3: 4,619 g. L-Cell contains over twice as much holdup compared to any other area within 202A (Table C-8); therefore, assuming the entire inventory is involved bounds any realistic impact-related events.

A damage ratio (DR) of 1.0 and a LPF of 1.0 is used for the unmitigated analysis per DOE-STD-3009-2014. This is extremely conservative as the majority of the MAR in 202A is up to 35 ft. below grade in remote cells with shielding walls that are between 2.5 ft. to 6 ft. of reinforced concrete (ref: H-2-52064).

The material form is expected to be residuals on the cell floor and in process tanks, pipes, and equipment. For the accident analysis the holdup is treated as powder in a can; an ARF of 1.0E-03 and an RF of 1.0E-01 are provided in Section 4.4.3.3.2 of DOE-HDBK-3010-94. The case of contamination in the PUREX Facility is similar to the case of contamination in a can. The piping is like a small can, the equipment is like a moderate-sized can, the process cells are like a large can, and the canyon, galleries, and railroad tunnel are like very large cans.

The 202A Crane Drop is modeled using a χ/Q of 3.5E-03 [sec/m^3].

Table 3-12 summarizes the input parameters used for SP-1, with their bases.

Table 3-12. SP-1 Source Term

Parameter	Value	Basis
MAR [g]	4,619	Table 3-3
MAR Form	Powder in a Can	Conservative/Bounding
Accident Type	Spill (Crush/Impact)	DOE-HDBK-1224-2018 (4.4.2)
DR	1	DOE-STD-3009-14 (3.2.4.1)
LPF	1	DOE-STD-3009-14 (3.2.4.1)
ARF	1.0E-03	DOE-HDBK-3010-94 (4.4.3.3.2)
RF	1.0E-01	DOE-HDBK-3010-94 (4.4.3.3.2)
χ/Q [sec/m^3]	3.50E-03	DOE-STD-3009-14 (3.2.4.2)

3.4.1.3 SP-1 Consequence Analysis

Table 3-13 provides the unmitigated dose consequences from an anticipated 202A Crane Drop accident.

Table 3-13. SP-1 Unmitigated Consequences

SP-1	TED to CW [rem]	TED to MOI [rem]
202A Crane Drop	10.9	0.07

- The unmitigated TED from a 202A crane drop to the MOI is 0.07 rem.
  - The frequency is anticipated
  - Consequence class is Low
  - MOI Risk Bin III
- The unmitigated TED from a 202A crane drop to the CW is 10.9 rem.
  - The frequency is anticipated
  - Consequence class is Low
  - CW Risk Bin III

3.4.1.4 SP-1 Comparison to the Evaluation Guideline

For the unmitigated 202A Crane Drop dose consequences to the MOI:

- The TED of 0.07 neither challenges nor exceeds the EG.
- No SC controls are required.

For the unmitigated 202A Crane Drop dose consequences to the CW:

- 100 rem threshold for designation of controls was not met.
- No SS controls are required.

3.4.1.5 SP-1 Summary of Safety SSCs and TSR Controls

The 202A Crane Drop accident does not result in an amount of risk that drives new TSR controls and is generally protected by the SMPs. The following TSRs are recognized as providing additional DID for this event:

- D.5.1 Safety Management Programs (AC): This AC ensures that applicable SMPs are established, implemented, and maintained.
- D.5.2 Material Management (SAC): This SAC prohibits the addition of MAR to the existing PUREX inventory, which protects accident assumptions.

Noteworthy components of the CHPRC SMP include, while not being limited to:

Emergency Preparedness Program

- CHPRC ensures that Emergency Response Organizations (EROs) are appropriately structured and staffed.
- CHPRC confirms that the ERO makes prompt, accurate, and efficient notifications and properly communicates the required and relevant information.

Hazardous Material Protection

- Work place hazards and job hazards are evaluated (JHAs).

Management, Organization, and Institutional Safety Provisions

- CHPRC implements the hazard controls specified in the nuclear facility's DSA and TSRs.

Operational Safety

- CHPRC implements the requirements of CRD O 422.1, *Conduct of Operations*.
- CHPRC implements the requirements of DOE/RL-92-36, *Hanford Site Hoisting and Rigging Manual*.

Radioactive and Hazardous Waste Management

- Configuration, location, and quantities of hazardous waste are controlled.

3.4.2 (SP-2) Tunnel Crane Drop

3.4.2.1 SP-2 Scenario Development

The Tunnel Crane Drop accident represents a Loss of Confinement/Spill caused by a large crane losing control of its load and striking the top of Storage Tunnel 2.

A suspended load impacting Storage Tunnel 2 is anticipated to create a localized failure of the tunnel roof, which then propagates into a complete catastrophic failure, and the load is assumed to impact the contents on which it falls.

While a crane load is not expected to span the entire length of the tunnel, is it feasible that a structural failure can self-propagate by a zippering effect. To bound all potential scenarios involving a structural failure, including those from age-related degradation, the load impacts two cars with a combined inventory equal to 25% of the total Storage Tunnel 2 inventory from 202A, and the entire tunnel is assumed to collapse. The frequency for this event is anticipated as human error is a potential cause.

3.4.2.2 SP-2 Source Term Analysis

The MAR is assumed to be 25% of the 202A related inventory within Tunnel 2, shown on Table 3-1, or 1,292 grams.

A DR of 1.0 and a LPF of 1.0 is used for the unmitigated analysis per DOE-STD-3009-14. This is very conservative as some of the waste items are within multiple layers of confinement, below grade.

The MAR associated with most of the rail cars in Storage Tunnel 2 consists of residuals in process tanks, jumpers, and equipment. For the accident analysis the holdup is treated as powder in a can; an ARF of 1.0E-03 and an RF of 1.0E-01 are provided in Section 4.4.3.3.2 of DOE-HDBK-3010-94. The case of contamination in Storage Tunnel 2 is being similar to contamination in a can is supported by the structure of the tunnel, as well as the internally contaminated process vessels on the rail cars.

The Storage Tunnel 2 Crane Drop modeled using a χ/Q of 3.5E-03 [sec/m^3].

Table 3-14 summarizes the input parameters used for SP-2, with their bases.

Table 3-14. SP-2 Source Term

Parameter	Value	Basis
MAR [g]	1,292	Table 3-1
MAR Form	Powder in a Can	Conservative/Bounding
Accident Type	Spill (Crush/Impact)	DOE-HDBK-1224-2018 (4.4.2)
DR	1	DOE-STD-3009-14 (3.2.4.1)
LPF	1	DOE-STD-3009-14 (3.2.4.1)
ARF	1.0E-03	DOE-HDBK-3010-94 (4.4.3.3.2)
RF	1.0E-01	DOE-HDBK-3010-94 (4.4.3.3.2)
χ/Q [sec/m^3]	3.50E-03	DOE-STD-3009-14 (3.2.4.2)

3.4.2.3 SP-2 Consequence Analysis

Table 3-15 provides the unmitigated dose consequences from an anticipated Storage Tunnel 2 Crane Drop accident.

Table 3-15. SP-2 Unmitigated Consequences

SP-2	TED to CW [rem]	TED to MOI [rem]
Tunnel 2 Crane Drop	3.5	0.02

- The unmitigated TED from a Tunnel 2 Crane Drop to the MOI is 0.02 rem.
  - The frequency is anticipated
  - Consequence class is Low
  - MOI Risk Bin III
- The unmitigated TED from a Tunnel 2 Crane Drop to the CW is 3.5 rem.
  - The frequency is anticipated

- Consequence class is Low
- CW Risk Bin III

3.4.2.4 SP-2 Comparison to the Evaluation Guideline

For the unmitigated Storage Tunnel 2 Crane Drop dose consequences to the MOI:

- The TED of 0.02 neither challenges nor exceeds the EG.
- No SC controls are required.

For the unmitigated Storage Tunnel 2 Crane Drop dose consequences to the CW:

- 100 rem threshold for designation of controls was not met.
- No SS controls are required.

A passive DF is credited as SS for this event:

- 0.9 m (3 ft) of Storage Tunnel 2 Soil Overburden

The SS Storage Tunnel 2 Soil Overburden is credited with providing an LPF of 0.5, reducing the dose consequences in half. The mitigated values are provided in Table 3-16.

Table 3-16. SP-2 Mitigated Consequences

Mitigated	TED to CW [rem]	TED to MOI [rem]
Tunnel 2 Crane Drop	1.8	0.01

The basis for use of this LPF is provided in Section 3.4.

3.4.2.5 SP-2 Summary of Safety SSCs and TSR Controls

The Storage Tunnel 2 Crane Drop accident does not result in an amount of risk that drives new TSR controls and is generally protected by the SMPs. The following TSRs are recognized as providing additional DID for this event:

- D.5.1 Safety Management Programs (AC): This AC ensures that applicable SMPs are established, implemented, and maintained.
- D.5.2 Material Management (SAC): This SAC prohibits the addition of MAR to the existing PUREX inventory, which protects accident assumptions.

Noteworthy components of the CHPRC SMP include, while not being limited to:

Emergency Preparedness Program

- CHPRC ensures that Emergency Response Organizations (EROs) are appropriately structured and staffed.
- CHPRC confirms that the ERO makes prompt, accurate, and efficient notifications and properly communicates the required and relevant information.

Hazardous Material Protection

- Work place hazards and job hazards are evaluated (JHAs).

Management, Organization, and Institutional Safety Provisions

- CHPRC implements the hazard controls specified in the nuclear facility's DSA and TSRs.

Operational Safety

- CHPRC implements the requirements of CRD O 422.1, *Conduct of Operations*.
- CHPRC implements the requirements of DOE/RL-92-36, *Hanford Site Hoisting and Rigging Manual*.

Radioactive and Hazardous Waste Management

- Configuration, location, and quantities of hazardous waste are controlled.

Additionally, a SS DF is credited for mitigating this event by providing a LPF of 0.5: 0.9 m (3 ft) of soil overburden.

3.4.3 (EE-1) 202A Aircraft Impact

3.4.3.1 EE-1 Scenario Development

The 202A Aircraft Impact accident is a Man-Made External Event that causes a localized failure of the 202A Building and a release of material. DOE-STD-3014-2006, *Accident Analysis for Aircraft Crash into Hazardous Facilities* requires an evaluation to assess the frequency of an aircraft crash at the PUREX Facility. A frequency analysis is documented in CP-59723, Rev. 0, *Assessment of Aircraft Impact on CP S&M Nuclear Facilities in the 200 East and West Areas*.

CP-59723, Rev 0 determined in Section 3.3 that the impact frequency per year for the 202A Building is 4.22E-06 which equates to a frequency category of "Extremely Unlikely." In accordance with DOE-STD-3014-2014, an aircraft impact accident analysis is provided for the 202A Building in Chapter 4 of CP-59723. The methodology is overall sound however the calculations need to be reviewed due to the update to the PUREX inventory.

An aircraft impact to Storage Tunnel 2 is not analyzed; although CP-59723 determined an aircraft frequency of "Extremely Unlikely" for the Storage Tunnel 2, this analysis did not credit the 2.4 m (8 ft) of soil overburden over the Storage Tunnels. Attachment 3 of DOE-STD-1120-2005, *Integration of Environment, Safety, and Health into Facility Disposition Activities*, provides an evaluation of general aviation aircraft accidents involving soil penetration. The evaluation concludes that no impacts to soil were found beyond 0.9 m (3 ft) deep. As such, the frequency of an aircraft impacting the MAR within the Storage Tunnels is considered "Beyond Extremely Unlikely" and, therefore, an accident analysis for this event is not required.

3.4.3.2 EE-1 Source Term Analysis

Three separate calculations had to be performed for an Aircraft Impact Event. The accident was split into the following components:

a. Mechanical: Aircraft engine block penetrates the roof and strikes L-Cell
b. Fire: Burning fuel ignites contaminated debris and step-off pad waste
c. Fire: Burning fuel covers process equipment and other contaminated surfaces

3.4.3.2.1 Structural Penetration (Mechanical Impact)

The logic for the mechanical component of the Aircraft Impact Event is provided in CP-59723, Section 4.2.1.1.

The MAR for the impact component is assumed to be the total inventory for N-Cell, PR Room, White Room, and L-Cell as shown on Table 3-3: 8,500 g, which bounds 202A impact events.

A DR of 1.0 and a LPF of 1.0 is used for the unmitigated analysis.

An ARF of 1.0E-03 and an RF of 1.0E-01 are provided in Section 4.4.3.3.2 of DOE-HDBK-3010-94 for powders in a can. Section 3.4.1.2 provides discussion regarding the use of these values at PUREX.

All components of the Aircraft Impact Event are modeled using a χ/Q of 3.5E-03 [sec/m^3].

Table 3-17 summarizes the input parameters used for the mechanical impact component of EE-1, with their bases.

Table 3-17. EE-1 Source Term (Mechanical Component)

Parameter	Value	Basis
MAR [g]	8,500	Table 3-3
MAR Form	Powder in a Can	Conservative/Bounding
Accident Type	Man-Made External Event	DOE-STD-1224-2018 (4.7.1)
DR	1	DOE-STD-3009-14 (3.2.4.1)
LPF	1	DOE-STD-3009-14 (3.2.4.1)
ARF	1.0E-03	DOE-HDBK-3010-94 (4.4.3.3.2)
RF	1.0E-01	DOE-HDBK-3010-94 (4.4.3.3.2)
χ/Q [sec/m^3]	3.50E-03	DOE-STD-3009-14 (3.2.4.2)

3.4.3.2.2 Burning Debris and Minor Waste

The MAR for the combustible waste involved in the Aircraft Impact Event is assumed to be 10 percent of the inventory within N-Cell, PR Room, White Room, and L-Cell: 850 g. This inventory is assumed to be associated with dust, debris, sludge, and some remaining plutonium and oxide and minor quantities of step-off pad or packaged waste. For this accident, the waste is assumed to be in burning plastic bags.

A DR of 1.0 and a LPF of 1.0 is used for the unmitigated analysis per DOE-STD-3009-14.

The MAR is analyzed as packaged waste, and Section 5.2.1.1 of DOE-HDBK-3010-94 provides an ARF of 5.0E-04 and an RF of 1.0. For this purpose, even waste in taped plastic bags or pails is considered packaged. DOE-HDBK-3010-94 states these values are both conservative and bounding. The use of these values is justified by viewing the cell and rooms as “packages”.

This component of the Aircraft Impact Event is modeled using a χ/Q of 3.5E-03 [sec/m^3].

Table 3-18 summarizes the input parameters used for the burning flammable material in EE-1, with their bases.

Table 3-18. EE-1 Source Term (10% Flammable Component)

Parameter	Value	Basis
MAR [g]	850	Table 3-3
MAR Form	Packaged Waste	Bounding
Accident Type	Man-Made External Event	DOE-STD-1224-2018 (4.7.1)
DR	1	DOE-STD-3009-14 (3.2.4.1)
LPF	1	DOE-STD-3009-14 (3.2.4.1)
ARF	6.0E-03	DOE-HDBK-3010-94 (5.2.1.1)
RF	1.0E-01	DOE-HDBK-3010-94 (5.2.1.1)
χ/Q [sec/m^3]	3.50E-03	DOE-STD-3009-14 (3.2.4.2)

3.4.3.2.3 Noncombustible Contaminated Equipment

The MAR for the component that covers non-combustible contaminated solids that are involved in the fire is represented with the remaining 90 percent of the inventory within N-Cell, PR Room, White Room, and L-Cell: 7,650 g.

A DR of 1.0 and a LPF of 1.0 is used for the unmitigated analysis.

The MAR is analyzed as non-reactive PuO_2 powder subjected to thermal stress; an ARF of 6.0E-03 and an RF of 1.0E-02 are provided in Section 4.4.1.1 of DOE-HDBK-3010-94. This is justified by much of the material being holdup likely plated out on the inner surfaces of meal components.

This component of the Aircraft Impact Event is modeled using a χ/Q of 3.5E-03 [sec/m^3].

Table 3-19 summarizes the input parameters used for the non-flammable items engulfed in flames for EE-1, with their bases.

Table 3-19. EE-1 Source Term (90% Non-Flammable Component)

Parameter	Value	Basis
MAR [g]	7,650	Table 3-3
MAR Form	Non-Reactive PuO_2 Powder	Conservative/Bounding
Accident Type	Man-Made External Event	DOE-STD-1224-2018 (4.7.1)
DR	1	DOE-STD-3009-14 (3.2.4.1)
LPF	1	DOE-STD-3009-14 (3.2.4.1)
ARF	6.0E-03	DOE-HDBK-3010-94 (4.4.1.1)
RF	1.0E-02	DOE-HDBK-3010-94 (4.4.1.1)
χ/Q [sec/m^3]	3.50E-03	DOE-STD-3009-14 (3.2.4.2)

3.4.3.3 EE-1 Consequence Analysis

Table 3-20 provides the unmitigated consequences from an extremely unlikely 202A Aircraft Impact accident.

Table 3-20. EE-1 Unmitigated Consequences

202A Aircraft Impact	TED to CW [rem]	TED to MOI [rem]
Mechanical Impact	20.0	0.13
Fire – Debris and Misc. Waste	10.0	0.06
Fire – Contaminated Non-Flammable	10.8	0.07
EE-1 Totals:	**40.8**	**0.26**

- The unmitigated TED from a 202A Aircraft Impact to the MOI is 0.26 rem.
  - The frequency is extremely unlikely
  - Consequence class is Low
  - MOI Risk Bin IV
- The unmitigated TED from a 202A Aircraft Impact to the CW is 40.8 rem.
  - The frequency is extremely unlikely
  - Consequence class is Moderate
  - CW Risk Bin III

3.4.3.4 EE-1 Comparison to the Evaluation Guidelines

For the unmitigated 202A Aircraft Impact dose consequences to the MOI:

- The TED of 0.26 neither challenges nor exceeds the EG.
- No SC controls are required.

For the unmitigated 202A Aircraft Impact dose consequences to the CW:

- 100 rem threshold for designation of controls was not met.
- No SS controls are required.

3.4.3.5 EE-1 Summary of Safety SSCs and TSR Controls

The 202A Aircraft Impact accident does not result in an amount of risk that drives new TSR controls and is generally protected by the SMPs. The following TSRs are recognized as providing additional DID for this event:

- D.5.1 Safety Management Programs (AC): This AC ensures that applicable SMPs are established, implemented, and maintained.
- D.5.2 Material Management (SAC): This SAC prohibits the addition of MAR to the existing PUREX inventory, which protects accident assumptions.

Noteworthy components of the CHPRC SMP include, while not being limited to:

Emergency Preparedness Program

- CHPRC ensures that Emergency Response Organizations (EROs) are appropriately structured and staffed.

- CHPRC confirms that the ERO makes prompt, accurate, and efficient notifications and properly communicates the required and relevant information.

Radioactive and Hazardous Waste Management

- Configuration, location, and quantities of hazardous waste are controlled.

3.4.4 (SP-3) Waste Container Drop

3.4.4.1 SP-3 Scenario Development

The Waste Container Drop accident represents a Loss of Confinement/Spill accident caused by a waste container being dropped and damaged, or a large contaminated object such as a process vessel being dropped on the ground outdoors while loading it into a waste container.

3.4.4.2 SP-3 Source Term Analysis

The quantity of MAR is assumed to be 40 DE-Ci (239 g of the 202A isotope mixture).

A DR of 1.0 and a LPF of 1.0 is used for the unmitigated analysis.

The MAR is analyzed as unpackaged materials with appreciable mass that generate significant forces upon impact with a surface (forces adequate to result in dislodgement of the surface contamination). An ARF of 1.0E-3 and an RF of 1.0 are provided in Section 5.2.3.2 of DOE-HDBK-3010-94. This is conservative because it bounds any accident with a packaged container in addition to accidents while loading one.

The Waste Container Drop is modeled using a χ/Q of 3.5E-03 [sec/m^3].

Table 3-21 summarizes the input parameters used for SP-3, with their bases.

Table 3-21. SP-3 Source Term

Parameter	Value	Basis
MAR [g]	40 DE-Ci (239 g)	Table 4-3
MAR Form	Unpackaged Waste	Conservative/Bounding
Accident Type	Loss of Confinement/Spill	DOE-HDBK-1224-2018 (4.4.2)
DR	1	DOE-STD-3009-14 (3.2.4.1)
LPF	1	DOE-STD-3009-14 (3.2.4.1)
ARF	1.0E-03	DOE-HDBK-3010-94 (5.2.3.2)
RF	1.0	DOE-HDBK-3010-94 (5.2.3.2)
χ/Q [sec/m^3]	3.50E-03	DOE-STD-3009-14 (3.2.4.2)

3.4.4.3 SP-3 Consequence Analysis

Table 3-22 provides the unmitigated consequences from an anticipated Waste Container Drop accident.

Table 3-22. SP-3 Unmitigated Consequences

SP-3	TED to CW [rem]	TED to MOI [rem]
Waste Container Drop	5.6	0.04

- The unmitigated TED from a Waste Container Drop to the MOI is 0.04 rem.
  - The frequency is anticipated
  - Consequence class is Low
  - MOI Risk Bin III
- The unmitigated TED from a Waste Container Drop to the CW is 5.6 rem.
  - The frequency is anticipated
  - Consequence class is Low
  - CW Risk Bin III

3.4.4.4 SP-3 Comparison to the Evaluation Guideline

For the unmitigated Waste Container Drop dose consequences to the MOI:

- The TED of 0.04 neither challenges nor exceeds the EG.
- No SC controls are required.

For the unmitigated Waste Container Drop dose consequences to the CW:

- 100 rem threshold for designation of controls was not met.
- No SS controls are required.

3.4.4.5 SP-3 Summary of Safety SSCs and TSR Controls

The Waste Container Drop accident does not result in an amount of risk that drives new TSR controls and is generally protected by the SMPs. This accident is one of the drivers for the Material Management (SAC). The amount of MAR analyzed in this accident forms the basis for the limit defined in TSR D.5.2.b; it protects the assumption that bounds the analysis.

- D.5.2 Material Management (SAC): This SAC prohibits the addition of MAR to the existing PUREX inventory, which protects accident assumptions.

The following TSR is recognized as providing additional DID for this event:

- D.5.1 Safety Management Programs (AC): This AC ensures that applicable SMPs are established, implemented, and maintained.

Noteworthy components of the CHPRC SMP include, while not being limited to:

Emergency Preparedness Program

- CHPRC ensures that Emergency Response Organizations (EROs) are appropriately structured and staffed.
- CHPRC confirms that the ERO makes prompt, accurate, and efficient notifications and properly communicates the required and relevant information.

Hazardous Material Protection

- Work place hazards and job hazards are evaluated (JHAs).

Management, Organization, and Institutional Safety Provisions

- CHPRC implements the hazard controls specified in the nuclear facility's DSA and TSRs.

Operational Safety

- CHPRC implements the requirements of CRD O 422.1, *Conduct of Operations*.
- CHPRC implements the requirements of DOE/RL-92-36, *Hanford Site Hoisting and Rigging Manual*.

Radioactive and Hazardous Waste Management

- HNF-EP-0063, *Hanford Site Solid Waste Acceptance Criteria*, establishes the acceptance criteria for waste generators.
- Configuration, location, and quantities of hazardous waste are controlled.
- Radioactive waste containers are managed in accordance with CRD O 435.1, *Radioactive Waste Management*, including container integrity.

3.4.5 (FIR-1) Staged Waste Fire

3.4.5.1 FIR-1 Scenario Development

The Staged Waste Fire accident represents a fully-loaded TRU waste container is involved in a fire while staged in the PUREX yard (inside the inner fence). The model analyzes radioactive waste, packaged in plastic taped bags, burning outdoors.

3.4.5.2 FIR-1 Source Term Analysis

The quantity of MAR is assumed to be 40 DE-Ci (239 g of the 202A isotope mixture).

A DR of 1.0 and a LPF of 1.0 is used for the unmitigated analysis.

The MAR is analyzed as packaged waste, and Section 5.2.1.1 of DOE-HDBK-3010-94 provides an ARF of 5.0E-04 and an RF of 1.0. For this purpose, even waste in taped plastic bags or pails is considered packaged. DOE-HDBK-3010-94 states these values are both conservative and bounding.

The Staged Waste Fire is modeled using a χ/Q of 3.5E-03 [sec/m^3]. Table 3-23 summarizes the input parameters used for FIR-1, with their bases.

Table 3-23. FIR-1 Source Term

Parameter	Value	Basis
MAR [g]	40 DE-Ci (239 g)	Table 4-3
MAR Form	Packaged Waste	Bounding (Includes plastic bags)
Accident Type	Fire	DOE-STD-1224-2018 (4.2.1)
DR	1	DOE-STD-3009-14 (3.2.4.1)
LPF	1	DOE-STD-3009-14 (3.2.4.1)
ARF	5.0E-04	DOE-HDBK-3010-94 (5.2.1.1)
RF	1.0	DOE-HDBK-3010-94 (5.2.1.1)
χ/Q [sec/m^3]	3.50E-03	DOE-STD-3009-14 (3.2.4.2)

3.4.5.3 FIR-1 Consequence Analysis

Table 3-24 provides the unmitigated consequences from an anticipated Staged Waste Fire accident.

Table 3-24. FIR-1 Unmitigated Consequences

FIR-1	TED to CW [rem]	TED to MOI [rem]
Staged Waste Fire	2.8	0.02

- The unmitigated TED from a Staged Waste Fire to the MOI is 0.02 rem.
  - The frequency is anticipated
  - Consequence class is Low
  - MOI Risk Bin III
- The unmitigated TED from a Staged Waste Fire to the CW is 2.8 rem.
  - The frequency is anticipated
  - Consequence class is Low
  - CW Risk Bin III

3.4.5.4 FIR-1 Comparison to Evaluation Guideline

For the unmitigated Staged Waste Fire dose consequences to the MOI:

- The TED of 0.02 neither challenges nor exceeds the EG.
- No SC controls are required.

For the unmitigated Staged Waste Fire dose consequences to the CW:

- 100 rem threshold for designation of controls was not met.
- No SS controls are required.

3.4.5.5 FIR-1 Summary of Safety SSCs and TSR Controls

The Staged Waste Fire accident does not result in an amount of risk that drives new TSR controls and is generally protected by the SMPs. This accident is one of the drivers for the Material Management (SAC). The amount of MAR analyzed in this accident forms the basis for the limit defined in TSR D.5.2.b; it protects the assumption that bounds the analysis.

- D.5.2 Material Management (SAC): This SAC prohibits the addition of MAR to the existing PUREX inventory, which protects accident assumptions.

The following TSR is recognized as providing additional DID for this event:

- D.5.1 Safety Management Programs (AC): This AC ensures that applicable SMPs are established, implemented, and maintained.

Noteworthy components of the CHPRC SMP include, while not being limited to:

Emergency Preparedness Program

- CHPRC ensures that Emergency Response Organizations (EROs) are appropriately structured and staffed.
- CHPRC confirms that the ERO makes prompt, accurate, and efficient notifications and properly communicates the required and relevant information.

Hazardous Material Protection

- Work place hazards and job hazards are evaluated (JHAs).

Management, Organization, and Institutional Safety Provisions

- CHPRC implements the hazard controls specified in the nuclear facility's DSA and TSRs.

Operational Safety

- CHPRC implements the requirements of CRD O 422.1, *Conduct of Operations*.
- CHPRC implements a Fire Protection Program that meets the requirements of CRD O 420.1C, *Facility Safety*.
- Nuclear Facilities control combustible material loading and ignition sources below levels assumed in the safety basis or FHA by performing periodic inspections.

Radioactive and Hazardous Waste Management

- HNF-EP-0063, *Hanford Site Solid Waste Acceptance Criteria*, establishes the acceptance criteria for waste generators.
- Configuration, location, and quantities of hazardous waste are controlled.

3.4.6 (FIR-2) N-Cell Fire

3.4.6.1 FIR-2 Scenario Development

The N-Cell Fire accident was selected for this fire since personnel access is anticipated for this area as part of routine S&M. For this analysis, a fire engulfs the entire radiological inventory in N-Cell. The N-Cell floor plan is shown in Figure 2-9.

This analysis is very conservative as all glovebox process solutions were removed and the vessels were flushed. As much combustible material as possible was removed from the gloveboxes. The gloveboxes are highly contaminated internally, and the initial deactivation step involved painting the internal surfaces with a Class A polymeric barrier system (PBS) material to

affix the contamination to the glovebox surfaces and remaining equipment. All outside glovebox process and electrical connections were isolated and/or shut off. The gloveboxes ports previously used for gloves and bagouts were sealed by placing an aluminum pan over the port, taping the pan in place, and using a plastic cover taped in place to cover the pan and the port.

3.4.6.2 FIR-2 Source Term Analysis

Two separate calculations had to be performed for the N-Cell Fire. The accident was split into the following components:

a. Fire: Burning leaded acrylic (PMMA) glovebox windows
b. Fire: Contaminated process equipment engulfed in flames

3.4.6.2.1 FIR-2 Source Term for Burning Glovebox Windows

The MAR for the glovebox fire component of the N-Cell Fire is assumed to be 10 percent of the N-Cell inventory as shown in Table 3-3: 193 g. This value was chosen based on a review of the gloveboxes, it was estimated that 10 percent of the surface area of the gloveboxes is composed of leaded acrylic (PMMA) windows.

A DR of 1.0 and a LPF of 1.0 is used for the unmitigated analysis per DOE-STD-3009-14.

The MAR is modeled as loose non-fixed powder on burning PMMA; an ARF of 6.0E-03 and an RF of 1.0 are used. The shielding over the glovebox windows is fabricated of transparent acrylic-lead materials and is not highly combustible. The PBS coating, which was applied to the entire interior surface of the gloveboxes, is not readily combustible and will not sustain combustion.

DOE-HDBK-3010-94, Chapter 5.0 "Surface Contamination: Contaminated, Combustible Solids," section 5.2.1 "Thermal Stress," 5.2.1.4.2 "Polymethylmethacrylate (Lucite/Perspex, Windows)" provides a bounding ARF x RF of 5.0E-02 for burning of acrylic (PMMA). This value is based on bounding values for combustion of PMMA with loose depleted uranium powder or dried UNH.

As a result, the bounding uncontained release value is not appropriate for the fixed material. In CHPRC-02287, *Determination of ARF*RF for Explosion Accidents and Fire Accidents Involving Plastic Surfaces*, Rev 1, an ARF x RF of 6.0E-03 and 1 are provided for releases from PMMA surfaces where the contaminant is on the surface opposite the fire and there is no fixative. For fixed contamination, the analysis states that while the ARF*RF is likely less than 6.0E-3, in the absence of applicable test data an ARF and RF of 6.0E-3 and 1.0 are selected as bounding. These ARF x RF values are consistent with the guidance in DOE-HDBK-3010-94 for fires involving non-reactive materials (section 4.4.1.1, with a conservative RF = 1.0).

This component of the N-Cell Fire is modeled using a χ/Q of 3.5E-03 [sec/m^3].

Table 3-25 summarizes the input parameters used for FIR-2, with their bases.

Table 3-25. FIR-2 Source Term (10% Flammable Component)

Parameter	Value	Basis
MAR [g]	193	Table 3-3
MAR Form	Powder on PMMA - No Fixative	Conservative/Bounding
Accident Type	Fire	DOE-STD-1224-2018 (4.2.1)
DR	1	DOE-STD-3009-14 (3.2.4.1)
LPF	1	DOE-STD-3009-14 (3.2.4.1)
ARF	6.0E-03	CHPRC-02287 (2.3) DOE-HDBK-3010-94 (4.4.1.1)
RF	1.0E+00	
χ/Q [sec/m^3]	3.50E-03	DOE-STD-3009-14 (3.2.4.2)

3.4.6.2.2 FIR-2 Source Term for Contaminated Process Equipment

The MAR for the component that covers the non-flammable process equipment engulfed in flames is remaining 90 percent of the N-Cell inventory as shown in Table 3-3: 1,734 g. This is conservative due to the size and intensity of fire required to involve the entire inventory within a two-hour window.

A DR of 1.0 and a LPF of 1.0 is used for the unmitigated analysis. This is conservative due to N-Cell being at the very bottom of the facility, 35 ft. below grade, with a relatively convoluted travel path to the environment; see Figure 2-5 and Figure 2-6.

The MAR is analyzed as non-reactive PuO_2 powder subjected to thermal stress; an ARF of 6.0E-03 and an RF of 1.0E-02 are provided in Section 4.4.1.1 of DOE-HDBK-3010-94.

This component of the N-Cell Fire is modeled using a χ/Q of 3.5E-03 [sec/m^3].

Table 3-26 summarizes the input parameters used for FIR-2, with their bases.

Table 3-26. FIR-2 Source Term (90% Non-Flammable Component)

Parameter	Value	Basis
MAR [g]	1,734	Table 3-3
MAR Form	Non-Reactive PuO_2 Powder	Conservative/Bounding
Accident Type	Fire	DOE-STD-1224-2018 (4.2.1)
DR	1	DOE-STD-3009-14 (3.2.4.1)
LPF	1	DOE-STD-3009-14 (3.2.4.1)
ARF	6.0E-03	DOE-HDBK-3010-94 (4.4.1.1)
RF	1.0E-02	DOE-HDBK-3010-94 (4.4.1.1)
χ/Q [sec/m^3]	3.50E-03	DOE-STD-3009-14 (3.2.4.2)

3.4.6.3 FIR-2 Consequence Analysis

Table 3-27 provides the unmitigated consequences from an N-Cell Fire accident.

Table 3-27. FIR-2 Unmitigated Consequences

N-Cell Fire	TED to CW [rem]	TED to MOI [rem]
Burning Glovebox Windows	27.2	0.18
Process Equipment Engulfed in Flames	2.4	0.02
FIR-2 Totals:	**29.6**	**0.20**

- The unmitigated TED from an N-Cell Fire to the MOI is 0.20 rem.
  - The frequency is unlikely
  - Consequence class is Low
  - MOI Risk Bin III
- The unmitigated TED from an N-Cell Fire to the CW is 29.6 rem.
  - The frequency is unlikely
  - Consequence class is Moderate
  - CW Risk Bin II

3.4.6.4 FIR-2 Comparison to the Evaluation Guidelines

For the unmitigated N-Cell Fire dose consequences to the MOI:

- The TED of 0.20 neither challenges nor exceeds the EG.
- No SC controls are required.

For the unmitigated N-Cell Fire dose consequences to the CW:

- 100 rem threshold for designation of controls was not met.
- No SS controls are required.

3.4.6.5 FIR-2 Summary of Safety SSCs and TSR Controls

The N-Cell Fire accident does not result in an amount of risk that drives new TSR controls and is generally protected by the SMPs. The following TSRs are recognized as providing additional DID for this event:

- D.5.1 Safety Management Programs (AC): This AC ensures that applicable SMPs are established, implemented, and maintained.
- D.5.2 Material Management (SAC): This SAC prohibits the addition of MAR to the existing PUREX inventory, which protects accident assumptions.

Noteworthy components of the CHPRC SMP include, while not being limited to:

Emergency Preparedness Program

- CHPRC ensures that Emergency Response Organizations (EROs) are appropriately structured and staffed.
- CHPRC confirms that the ERO makes prompt, accurate, and efficient notifications and properly communicates the required and relevant information.

Hazardous Material Protection

- Work place hazards and job hazards are evaluated (JHAs).

Management, Organization, and Institutional Safety Provisions

- CHPRC implements the hazard controls specified in the nuclear facility's DSA and TSRs.

Operational Safety

- CHPRC implements the requirements of CRD O 422.1, *Conduct of Operations*.
- CHPRC implements a Fire Protection Program that meets the requirements of CRD O 420.1C, *Facility Safety*.
- Nuclear Facilities control combustible material loading and ignition sources below levels assumed in the safety basis or FHA by performing periodic inspections.

Radioactive and Hazardous Waste Management

- Configuration, location, and quantities of hazardous waste are controlled.

3.4.7 (NPH-1) Seismic Event

3.4.7.1 NPH-1 Scenario Development

The 202A and Tunnel 2 Seismic accident very conservatively represents a complete structural failure of all the major PUREX structures (i.e., 202A Building, Deep-bed filters, and Storage Tunnel 2).

The 202A Building structures were built in accordance with the 1952 Uniform Building Code (UBC) Zone 2 earthquake regulations. Based on the PUREX Facility design criteria, a UBC seismic demand is expected to result in some structural damage (cracking, spalling, and minor structural damage) to building structures. The event frequency is classified as "unlikely," consistent with the seismic discussion provided in HNF-11724.

3.4.7.2 NPH-1 Source Term Analysis

Two separate calculations had to be performed for the 202A and Tunnel 2 Seismic accident. The calculations were split into the following components:

a. Seismic: Catastrophic Failure of 202A and Deep-Bed Filters
b. Seismic: Catastrophic Failure of Storage Tunnel 2

3.4.7.2.1 202A Building & Deep-Bed Filters

The MAR is assumed to be the total inventory of 202A, combined with the inventory of the Deep-Bed Filters, as shown on Table 3-1; 14,408 g.

A DR of 1.0 and a LPF of 1.0 is used for the unmitigated analysis. This is extremely conservative as the majority of the MAR in 202A is up to 35 ft. below grade surrounded by 3 ft. to 9 ft. of reinforced concrete (ref: H-2-52064).

The MAR is analyzed as powder in a can; an ARF of 1.0E-03 and an RF of 1.0E-01 are provided in Section 4.4.3.3.2 of DOE-HDBK-3010-94. For more details on the selection of these values, see Section 3.4.1.2.

For the 202A Building, a χ/Q of 3.5E-03 [sec/m^3] is used at the 100 m (328 ft) CW receptor location to account for building wake effects. While the entire 202A Canyon Building is assumed to fail, it is anticipated that the debris created by the structural failure is large enough that it will still provide a building wake.

Regarding the conservatism in the analysis, if enough structural material is still available to provide a building wake upon catastrophic failure, it is reasonable to conclude a portion of the material will remain effectively trapped below grade for the short-term duration of the accident.

Table 3-28 summarizes the input parameters used for the 202A and Deep-Bed Filter component of NPH-1, with their bases.

Table 3-28. NPH-1 Source Term (202A and Deep-Bed Filters)

Parameter	Value	Basis
MAR [g]	14,408	Table 3-1
MAR Form	Powder in Cans	Conservative/Bounding
Accident Type	Natural Phenomena Hazard	DOE-STD-1224-2018 (4.6.1)
DR	1	DOE-STD-3009-14 (3.2.4.1)
LPF	1	DOE-STD-3009-14 (3.2.4.1)
ARF	1.0E-03	DOE-HDBK-3010-94 (4.4.3.3.2)
RF	1.0E-01	DOE-HDBK-3010-94 (4.4.3.3.2)
χ/Q [sec/m^3]	3.50E-03	DOE-STD-3009-14 (3.2.4.2)

3.4.7.2.2 Storage Tunnel 2 (202A Items)

The MAR is assumed to be the total 202A inventory for Storage Tunnel 2 as shown on Table 3-1: 5,167 g. This value does not include any of the 324 waste items.

A DR of 1.0 and a LPF of 1.0 is used for the unmitigated analysis per DOE-STD-3009-14. This is conservative as the tunnel railbed is below grade and the structure is covered with soil.

The MAR associated with most of the rail cars in Storage Tunnel 2 consists of residuals in process tanks, jumpers, and equipment. For the accident analysis the material is treated as powder in a can; an ARF of 1.0E-03 and an RF of 1.0E-01 are provided in Section 4.4.3.3.2 of DOE-HDBK-3010-94. The case of contamination in Storage Tunnel 2 is being similar to contamination in a can is supported by the structure of the tunnel, as well as the internally contaminated process vessels on the rail cars.

The Storage Tunnel 2 portion of the seismic event is modeled using a χ/Q of 3.5E-03 [sec/m^3].

Table 3-29 summarizes the input parameters used for the items from 202A within Tunnel 2 component of NPH-1, with their bases.

Table 3-29. NPH-1 Source Term (Tunnel 2 Items from 202A)

Parameter	Value	Basis
MAR [g]	5,167	Table 3-1
MAR Form	Powder in Cans	Conservative/Bounding
Accident Type	Natural Phenomena Hazard	DOE-STD-1224-2018 (4.6.1)
DR	1	DOE-STD-3009-14 (3.2.4.1)
LPF	1	DOE-STD-3009-14 (3.2.4.1)
ARF	1.0E-03	DOE-HDBK-3010-94 (4.4.3.3.2)
RF	1.0E-01	DOE-HDBK-3010-94 (4.4.3.3.2)
χ/Q [sec/m^3]	3.50E-03	DOE-STD-3009-14 (3.2.4.2)

3.4.7.2.3 Storage Tunnel 2 (324 Waste Items)

The MAR is assumed to be all 324 waste items except for the vitrified glass in Storage Tunnel 2, as shown on Table 3-1: 2,102 g. The vitrified glass is excluded as glass has an ARF x RF = 0, details are provided in section C.2.3.2.

A DR of 1.0 and a LPF of 1.0 is used for the unmitigated analysis per DOE-STD-3009-14. This is conservative as the tunnel railbed is below grade and the structure is covered with soil.

The MAR from the 324 facility is contained within a concrete burial box. Inside the concrete box are cask liners, some containing grouted waste, others holding stainless steel engineered capsules holding dispersible material (C.2.3.3). The grouted waste includes items such as refractory bricks, glass melter components, HEPA filter media, and four SrF_2 capsules. For the accident analysis the material is treated as powder in a can; an ARF of 1.0E-03 and an RF of 1.0E-01 are provided in Section 4.4.3.3.2 of DOE-HDBK-3010-94. The contamination in Storage Tunnel 2 is similar to contamination in a can due to the structure of the tunnel, as well as the nested containers holding these items.

The Storage Tunnel 2 portion of the seismic event is modeled using a χ/Q of 3.5E-03 [sec/m^3].

Table 3-30 summarizes the input parameters used for the items from 324 within Tunnel 2 component of NPH-1, with their bases.

Table 3-30. NPH-1 Source Term (Tunnel 2 324 Waste)

Parameter	Value	Basis
MAR [g]	2,102	Table 3-1
MAR Form	Powder in Cans	Conservative/Bounding
Accident Type	Natural Phenomena Hazard	DOE-STD-1224-2018 (4.6.1)
DR	1	DOE-STD-3009-14 (3.2.4.1)
LPF	1	DOE-STD-3009-14 (3.2.4.1)
ARF	1.0E-03	DOE-HDBK-3010-94 (4.4.3.3.2)
RF	1.0E-01	DOE-HDBK-3010-94 (4.4.3.3.2)
χ/Q [sec/m^3]	3.50E-03	DOE-STD-3009-14 (3.2.4.2)

3.4.7.3 NPH-1 Consequence Analysis

Table 3-31 provides the unmitigated consequences from a seismic accident.

Table 3-31. NPH-1 Unmitigated Consequences

Seismic Event	TED to CW [rem]	TED to MOI [rem]
Catastrophic Failure of 202A and Deep-Bed Filters	33.6	0.22
Catastrophic Failure of Storage Tunnel 2, Items from 202A	13.9	0.09
Catastrophic Failure of Storage Tunnel 2, Items from 324	1.7	0.01
NPH-1 Totals:	**49.2**	**0.32**

- The unmitigated TED from a Seismic Event to the MOI is 0.32 rem.
  - The frequency is unlikely
  - Consequence class is Low
  - MOI Risk Bin III
- The unmitigated TED from a Seismic Event to the CW is 49.2 rem.
  - The frequency is unlikely
  - Consequence class is Moderate
  - CW Risk Bin II

3.4.7.4 NPH-1 Comparison to the Evaluation Guideline

For the unmitigated 202A and Tunnel 2 Seismic dose consequences to the MOI:

- The TED of 0.32 neither challenges nor exceeds the EG.
- No SC controls are required.

For the unmitigated 202A and Tunnel 2 Seismic dose consequences to the CW:

- 100 rem threshold for designation of controls was not met.
- While no SS controls are required, SS controls were considered.

A passive DF is credited as SS for this event:

- 0.9 m (3 ft) of Storage Tunnel 2 Soil Overburden

The SS Storage Tunnel 2 Soil Overburden is credited with providing an LPF of 0.5, reducing the dose consequences in half. The mitigated values are provided in Table 3-32.

Table 3-32. NPH-1 Mitigated Consequences

Mitigated	TED to CW [rem]	TED to MOI [rem]
Catastrophic Failure of 202A and Deep-Bed Filters	33.6	0.22
Catastrophic Failure of Storage Tunnel 2, 202A Items	7.0	0.05
Impact to 324 Waste Items	0.9	0.01
NPH-1 Totals:	**41.5**	**0.28**

The basis for use of this LPF is provided in Section 3.4.

3.4.7.5 NPH-1 Summary of Safety SSCs and TSR Controls

The 202A and Tunnel 2 Seismic accident does not result in an amount of risk that requires new TSR controls and is generally protected by the SMPs.

While not required, SS controls were considered; of the approximately 2.4 m (8 ft) of soil overburden above the tunnel, the closest 0.9 m (3 ft) of soil is credited as a SS DF to protect the CW by mitigating a release from a seismic-induced collapse event. This is represented in the mitigated analysis with a LPF of 0.5 (a 50% reduction).

The following TSRs are recognized as bounding the accident and providing additional DID:

- D.5.1 Safety Management Programs (AC): This AC ensures that applicable SMPs are established, implemented, and maintained.
- D.5.2 Material Management (SAC): This SAC prohibits the addition of MAR to the existing PUREX inventory, which protects accident assumptions.

Noteworthy components of the CHPRC SMP include, while not being limited to:

Emergency Preparedness Program

- CHPRC ensures that Emergency Response Organizations (EROs) are appropriately structured and staffed.
- CHPRC confirms that the ERO makes prompt, accurate, and efficient notifications and properly communicates the required and relevant information.

Radioactive and Hazardous Waste Management

- Configuration, location, and quantities of hazardous waste are controlled.

It is noted that upon documented completion of the planned Storage Tunnel 2 stabilization/ grouting, the MAR associated with the tunnel will be removed from the accident analysis upon the subsequent revision to this document.

3.4.8 (BEBE-1) Beyond Evaluation Basis Event

3.4.8.1 BEBE-1 Scenario Development

Per DOE-STD-1120-2016, the evaluation must consider a BEBE. The list provided in OE-1: 2013:01, "Improving Department of Energy Capabilities for Mitigating Beyond Design Basis Events" was reviewed. Since the PUREX Facility has been deactivated and most services have long been disconnected, the majority of the list was not applicable. Furthermore, while identified as providing DID, no credit has been taken for the structure and it is already assumed to fail during a seismic event.

Fire accidents in conjunction with the seismic event were first considered, however with the all the legacy utility systems disconnected, identifying a credible fire initiator is difficult. Additionally, during deactivation, combustibles were removed to the greatest extent possible and the facility is no longer occupied. More details can be found in the FHA (CP-41822, Rev 5, Section 8).

For a Beyond Evaluation Basis Event, the 202A and Tunnel 2 Seismic accident occurs while a Critical Lift is being performed over Storage Tunnel 2. In addition to the damage caused by the seismic event, the crane drops the suspended load, which directly impacts the rail cars underneath.

3.4.8.2 BEBE-1 Source Term Analysis

The MAR is assumed to be all the material within 202A, as well as the contents of Storage Tunnel 2. The inputs for the calculations are not provided here as the consequences for this accident were obtained by summing the dose consequences from SP-2 and NPH-1; see Sections 3.4.2 and 3.4.7 for more details.

3.4.8.3 BEBE-1 Consequence Analysis

Table 3-33 provides the unmitigated consequences from a Beyond Evaluation Basis Event.

Table 3-33. BEBE-1 Unmitigated Consequences

Seismic with Crane Drop	TED to CW [rem]	TED to MOI [rem]
(SP-2) Tunnel Crane Drop	3.5	0.02
(NPH-1) Seismic Event	49.1	0.32
BEBE-1 Totals:	**52.6**	**0.34**

- The unmitigated TED from the Beyond Evaluation Basis Event to the MOI is 0.34 rem.
  - This is a BEBE event
- The unmitigated TED from the Beyond Evaluation Basis Event to the CW is 52.6 rem.
  - This is a BEBE event

3.4.8.4 BEBE-1 Comparison to the Consequence Thresholds

This is a BEBE. The frequency of occurrence for NPH events cannot be reduced. There are no new SC SSCs, SS SSCs or other safety controls identified, in addition to those previously identified in the Evaluation Basis Accident (EBA) discussions.

3.4.8.5 BEBE-1 Summary of Safety SSCs, SACs, and TSR Controls

The Beyond Evaluation Basis Accident did not drive the need for additional controls.

The following TSRs are recognized as bounding the accident and providing additional DID:

- D.5.1 Safety Management Programs (AC): This AC ensures that applicable SMPs are established, implemented, and maintained.
- D.5.2 Material Management (SAC): This SAC prohibits the addition of MAR to the existing PUREX inventory, which protects accident assumptions.

Noteworthy components of the CHPRC SMP include, while not being limited to:

Emergency Preparedness Program

- CHPRC ensures that Emergency Response Organizations (EROs) are appropriately structured and staffed.
- CHPRC confirms that the ERO makes prompt, accurate, and efficient notifications and properly communicates the required and relevant information.

Radioactive and Hazardous Waste Management

- Configuration, location, and quantities of hazardous waste are controlled.

It is noted that upon documented completion of the planned Storage Tunnel 2 stabilization/ grouting, the MAR associated with the tunnel will be removed from the accident analysis upon the subsequent revision to this document.

3.5 Safety Structures, Systems, and Components

There are two SSCs associated with the PUREX Facility that are evaluated in Section 3.4 and Appendix A. The SSCs of interest are the building structure and the ventilation. The evaluation of these SSCs is discussed in Section 4.1.

3.6 Margin of Safety

This section addresses margins of safety to facilitate USQ determinations for changes affecting PUREX.

Based on the guidance in DOE G 424.1-1B *Implementation Guide for Use in Addressing Unreviewed Safety Question Requirements*, Appendix A, and PRC-PRO-NS-062, *Unreviewed Safety Question Process*, the safety basis was reviewed to determine if there were instances of DOE-defined functional requirements for equipment that would provide a basis for the identification of margins of safety.

Margin of Safety must be an explicit function between a design or assumed failure point and its associated safety limit.

- The PUREX safety basis has no explicit margin of safety.
- The PUREX safety basis does not contain safety limits.

- The PUREX safety basis does not credit SC SSCs that would result in releases of 25+ rem to the MOI upon failure.

As such, there are no explicit or implicit margins of safety associated with PUREX. The margin of safety question in USQ determinations performed against this DSA shall be answered "No."

4.0 Safety Structures, Systems, and Components

This chapter identifies the facility features and control elements required for the currently anticipated activities at PUREX. It provides details about facility equipment and features that are necessary to satisfy the current risk evaluation guidelines, provide DID, and contribute to worker safety. The controls presented here are based on the results of the HA (Appendix A) and accident analyses for S&M activities at the PUREX Facility, as described in Section 3.0).

This section evaluates the PUREX SSCs for SC, SS, or DID classification. Table 4-1 provides a summary of the accidents analyzed in Chapter 3.0 for reference.

Table 4-1 PUREX Facility Unmitigated Accident Summary

Scenario	Frequency	CW TED [rem]	MOI TED [rem]	CW/MOI Risk Bins
3.4.1 (SP-1) 202A Crane Drop	A	10.9	0.07	III/III
3.4.2 (SP-2) Tunnel Crane Drop	A	3.5	0.02	III/III
3.4.3 (EE-1) 202A Aircraft Impact	EU	40.8	0.26	III/IV
3.4.4 (SP-3) Waste Container Drop	A	5.6	0.04	III/III
3.4.5 (FIR-1) Staged Waste Fire	A	2.8	0.02	III/III
3.4.6 (FIR-2) N-Cell Fire	U	29.6	0.20	II/III
3.4.7 (NPH-1) Seismic Event	U	49.2	0.32	II/III
3.4.8 (BEBE-1) BEBE Event	BEU	52.6	0.34	N/A

4.1.1 Safety Class SSCs

All of the accident analyses in Chapter 3.0 identified "low" consequences to the MOI, as such, no SC SSCs are required or identified at the PUREX Facility.

4.2 Safety Significant SSCs

There were no accidents that resulted in consequences equal to or greater than 100 rem to the CW (Risk Bin I). Scenarios with a Risk Bin value of I or II for the CW require consideration of Safety Significant SSCs. Two scenarios resulted in a Risk Bin II event: The N-Cell Fire accident and the Seismic Event. SS SSCs were considered for these event although no new SSCs were identified that would not require significant physical upgrades to the facility.

SS controls are also required to be considered for events that present high consequences to the FW, such as events that could cause prompt death, serious injury, or significant radiological or chemical exposure. There were no events identified in the HA or accident analyses that identified high consequences to the FW.

One SSC is identified as a SS DF for the PUREX Facility. A depth of 0.9 m (3 ft) of the soil overburden over Storage Tunnel 2 is considered SS as it mitigates releases from seismic, fire,

impact, or age induced collapses of the Storage Tunnel. The function of this SS DF is described in Section 3.4.

4.3 Specific Administrative Controls

A summary of the SACs credited for protecting accident analysis assumptions is given in Table 4-2.

Table 4-2. Summary of SACs

Control	Type	Accidents
TSR D.5.2	Directive Action SAC	All

4.3.1 Material Management (SAC)

SAC D.5.2 is identified to perform the following functions:

a. Inventory Control: Prohibit the addition of radiological material to the existing PUREX Facility radiological inventory.

b. Inventory Limit: Limit the amount of TRU material at the PUREX Facility, located in externally-staged waste or equipment removed from PUREX structures, to 40 DE-Ci (239 g of the 202A mixture). SAC D.5.2 is identified as a SAC as it is required to protect key accident assumptions and consequences.

4.3.1.1 Safety Function – Material Management Specific Administrative Control

SAC D.5.2 ensures that the radioactive waste inventories assumed in the PUREX DSA will not be exceeded, and will only decrease. This control is designated as a SAC because its function is credited to maintain the container drop and staged waste fire accident consequences within the bounds of the analysis, and would be SS if performed by a physical SSC.

4.3.1.2 Control Description – Material Management Specific Administrative Control

SAC D.5.2 prohibits the addition of radiological inventory to the existing PUREX Facility inventory and provides a limit on the amount of TRU waste in externally-staged waste or removed equipment at the PUREX Facility.

PUREX DSA-analyzed accidents rely on assumed, conservative radiological inventories to provide reliable accident consequence analysis. If additional inventory were added to the PUREX Facility, it would result in the facility being immediately outside the established, analyzed, approved safety basis for operations, and represent a positive USQ.

Established processes track the TRU inventory of staged waste or equipment removed from PUREX Facility structures. A lower operational limit may be established to prevent violating the limit established in the SAC D.5.2. Operations personnel are trained to verify that the SAC limit will not be violated prior to initiating waste movements.

4.3.1.3 Functional Requirements – Material Management Specific Administrative Control

The function requirements to fulfill the safety function for SAC D.5.2 are as follows:

a. Inventory Control: ensure that the PUREX Facility radiological inventory does not increase outside the approved analyzed accident envelope.

b. Inventory Limit: ensure that the TRU inventory of externally-staged waste or equipment removed from PUREX facilities is less than the maximum analyzed amount.

4.3.1.4 Control Evaluation – Material Management Specific Administrative Control

Prohibiting the addition of radiological material to the PUREX Facility inventory (SAC D.5.2.a) protects accident assumptions as documented in Chapter 3.0. The USQ process and implementing procedures protect this SAC element.

For TRU staged waste operations, a conservative material inventory limit has been established (SAC D.5.2.b). The staged waste fire accident analysis (FIR-1) assumed that a hypothetical waste container with an inventory of 239 g of PUREX 202A isotopic distribution is engulfed in a fire while being removed from the 202A Building. As described in Appendix C, the isotopic quantities were determined based on a bounding initial isotopic distribution of irradiated reactor fuel, and decay-corrected to 2018 values. The MAR inventory is assumed to be approximately 239 g, which corresponds to 40 DE-Ci using the isotopic distribution discussed above. This is considered to be conservative, as a typical waste container is expected to consist primarily of step-off pad and contamination control waste, and has historically been below 1 gram of ^{239}Pu; any TRU-containing equipment removed from a PUREX Facility and staged outside is assumed to have the same inventory. Furthermore, a CSER would need to be implemented for any activities involving 15 or more grams of fissile material.

Table 4-3 provides the conversions for the 40 DE-Ci limit for waste stored outside PUREX, to protect the accident MAR assumptions of the Waste Container Drop and Waste Container Fire accidents as analyzed in Chapter 3.

Table 4-3 PUREX 202A Waste Composition

Isotope	[g per g]	SA [Ci/g]	[DE-Ci/Ci]	[FGE/g]	[grams]	[DE-Ci]	[FGE]
^{238}Pu	6.29E-04	1.71E+01	9.22E-01	1.13E-01	0.2	2.4	0.0
^{239}Pu	8.30E-01	6.21E-02	1.00E+00	1.00E+00	198.9	12.4	198.9
^{240}Pu	1.30E-01	2.28E-01	1.00E+00	2.25E-02	31.2	7.1	0.7
^{241}Pu	2.26E-03	1.03E+02	1.80E-02	2.25E+00	0.5	1.0	1.2
^{242}Pu	2.69E-03	3.93E-03	9.60E-01	7.50E-03	0.6	0.0	0.0
^{241}Am	2.48E-02	3.43E+00	8.40E-01	1.88E-02	5.9	17.1	0.1
^{90}Sr	3.05E-03	1.37E+02	4.80E-04	0.00E+00	0.7	0.0	0.0
^{137}Cs	5.96E-03	8.70E+01	9.20E-05	0.00E+00	1.4	0.0	0.0
Total Pu	--	--	--	--	**231.4**	**22.8**	**200.8**
Total FP	--	--	--	--	**2.2**	**0.1**	**0.0**
Total:	1.0	--	--	--	**239.5**	**40.0**	**200.9**

4.3.1.5 Technical Safety Requirement Control

SAC D.5.2 is written as a directive action TSR per DOE G 423.1-1B, *Implementation Guide for Use in Developing Technical Safety Requirements*, and DOE-STD-1186-2016, *Specific Administrative Controls*, to ensure that the PUREX Facility inventory and externally-staged TRU waste or TRU-containing equipment removed from PUREX facilities inventories are protected at all times.

4.4 Defense-in-Depth Systems, Structures, and Components

SSCs are evaluated for DID designation if they are below the criteria for SC or SS.

DOE G 424.1-1B, Section 1 "Introduction" states:

> For the purposes of this Guide, equipment important to safety should be understood to include any equipment whose function, malfunction, or failure can affect safety either directly or indirectly. This includes safety class and safety significant structures, systems, and components (SSCs), and other systems that perform an important defense-in-depth function, equipment relied on for safe shutdown, and in some cases, process equipment. Support systems to safety system that are required for the safety function are also safety systems and should be included.

The accident analyses in Section 3.4 postulate structural damage to the facility and identify the radiological inventories at risk. There are SSCs identified to mitigate the consequences of these accidents, see Section 4.2.

Although no credit is taken for reduction of accident dose consequences in this DSA, PUREX Facility structures provide a degree of confinement of releases beyond the facility structure under both normal and some accident conditions. Therefore, the PUREX Facility structures in Table

4-4 are designated as DID, as they serve a confinement function for the residual materials within the facility.

Table 4-4. Defense-in-Depth Equipment

Element	Boundary and Passive Functions
202A Building Structures (including the canyon, galleries, and coverblocks)	**Boundary**: The physical boundary includes the foundation, cover blocks, walls, and ceiling/roof of the structures (see Figure 2-5). **Passive Function:** **Confinement** – The reinforced concrete facility structures provide a degree of confinement of the MAR within the facility during normal operations and some accident conditions.
Deep Bed Filters 1 & 2	**Boundary**: The Deep-bed filter physical boundaries include the below-grade foundations and wall structures, and the cover blocks. **Passive Function**: **Confinement** – The Deep-bed filter structures provide a degree of confinement of the MAR within the filters during normal operations and some accident conditions.
Storage Tunnel 2 Structure	**Boundary**: The physical boundary includes the doors, walls, ceiling/roof of the structure, and ventilation shafts (see Figure 2-8). **Passive Function**: **Confinement** – The Storage Tunnel 2 structure provides a degree of confinement of the MAR within Storage Tunnel 2 during normal operations and some accident conditions.

4.5 Administrative Controls

To ensure that assumptions of this DSA are maintained and to ensure continued safety management of the facility, two Administrative Controls are provided.

4.5.1 AC D.5.1: Safety Management Programs (AC)

AC D.5.1 is identified to ensure establishment, implementation, and assessment of applicable SMPs.

This AC is not classified as a SAC because it does not meet the criteria described in DOE-STD-1186-2016, *Specific Administrative Controls*, Section 2.1, "Identification of SACs." That is, the AC is not needed to prevent or mitigate an accident scenario and the safety function would not be safety class or safety significant if the function were provided by an SSC because all accidents analyzed in Section 3.4 resulted in acceptable (i.e., did not challenge guidelines for consideration of SS or SC controls) CW and MOI receptor consequences without the application of controls.

4.5.2 AC D.5.3: Nuclear Criticality Safety

AC D.5.3 is identified to establish a Criticality Safety Program and provide measures that ensure Criticality Safety Program key elements are in place to prevent an accidental criticality at the PUREX Facility. Elements include criticality limits and controls, engineered safety features, notifications, and reporting of criticality safety nonconformances.

The Criticality Safety Program is described in Section 6.0.

4.6 Hazard Control Derivation Basis

Building features and controls serve to reduce the potential risk to the public, CWs, and FWs from uncontrolled releases of radioactive materials. PUREX Facility structures are identified as DID within the accident analyses presented in Section 3.4. Key programmatic commitments in Chapter 3.0 and Chapter 4.0 are elements of the Site SMPs as described in Chapter 7.0 and specified in AC D.5.1.

5.0 Derivation of Technical Safety Requirements

There are no Safety Limits, Limiting Control Settings, or Limiting Conditions for Operation applicable to the PUREX Facility.

5.1 TSR Coverage

This chapter describes the type of TSR coverage to be implemented for each control that is carried over to the TSR Appendix D. It summarizes all identified SC and SS SSCs, SACs, and programmatic ACs to be covered in the TSRs. Chapter 4 discussed the SC and SS SSCs and SACs that were identified in Chapter 3. Section 4.2 provides the complete discussion of the safety function, functional requirement, performance criteria, and applicable TSR controls for the identified SS SAC.

5.2 Derivation of Facility Modes

Facility modes are used to describe the applicability of Limiting Conditions for Operation and some SACs and ACs. This section describes, based on hazard analysis and accident analysis, where different facility modes are appropriately distinguished to facilitate application of the Limiting Conditions for Operation, SACs, and ACs. The PUREX Facility currently has only one mode defined: S&M Mode.

5.2.1 S&M Mode

The scope of work activities taking place at the PUREX Facility during S&M Mode are those intended to maintain confinement of hazardous materials and protect workers. These include pre-approved activities for S&M, as well as activities anticipated to occur but are not necessarily already defined by pre-approved procedures.

5.3 TSR Derivation

5.3.1 Limiting Conditions for Operation and Surveillance Requirements

Chapter 3 does not currently identify any TSR Limiting Conditions for Operation requiring coverage in the TSRs.

5.3.2 Administrative Controls

5.3.2.1 Material Management (SAC D.5.2)

SAC D.5.2 is established, implemented, and maintained to ensure that the initial MAR (source inventory) conditions assumed in the PUREX Facility accident analyses will not be exceeded, as described in DOE-STD-1186-2016 Section 1.7, “SACs for Hazardous Material Inventory Limits.”

During the current PUREX Facility S&M life-cycle phase, planned activities will consist primarily of S&M, the storage of supplies and materials related to S&M activities, and limited deactivation activities. More information on these activities is provided in Section 2.3.

All of these activities center on the PUREX Facility's existing inventory and do not include or authorize the introduction of any external radioactive inventory.

5.4 Design Features

This section identifies and describes the passive DFs that, if altered or modified, would have a significant effect on safety.

5.4.1 Storage Tunnel 2 Soil Overburden – Tunnel Collapse Events

As noted in section 4.2.1 above, the Storage Tunnels are covered by 2.4 m (8 ft) of soil overburden. Storage Tunnel 1 has been filled with grout, therefore it is no longer considered. The 2.4 m (8 ft) of soil overburden atop Storage Tunnel 2 represents a total volume greater than 25,202 m^3 (890,000 ft^3). If a seismic event, load drop, or age-related weakening causes the tunnel to collapse, this soil will immediately fall into the volume of the collapsed tunnel (akin to the E-F11 concentrator under the Tunnel 1 collapse site in Figure 2-10), and will trap and effectively mitigate any releases in a manner similar to the filtration mechanism of sand filters still used as ventilation filters in the older Hanford processing facilities (e.g., REDOX). Therefore, 0.9 m (3 ft) of Storage Tunnel 2 Soil Overburden is credited as a mitigative SS DF to mitigate releases from events causing a collapse of a storage tunnel, and can be represented by applying an LPF of 0.5. The basis for using this LPF is provided in Section 3.4.

This passive DESIGN FEATURE is inspected on an annual basis via CPSM-PRO-OP-50668, *Surveillance of PUREX Facility*.

5.5 Interface with Technical Safety Requirements from Other Facilities

There are no interfaces required with other facilities' TSRs.

5.6 Step Out Criteria

The PUREX Facility can be reclassified as a LTHC3 Facility when sufficient radioactive material is removed to lower the radioactive material inventory below the HC- 3 threshold. Reclassification of the PUREX Facility as a LTHC3 Facility will require DOE approval and a formal Implementation Verification Review.

Those buildings identified as LTHC3 facilities within this DSA may undergo demolition and final remediation activities using an approved Health and Safety Plan and applicable SMPs. Likewise, utilities that exist in the facility 'yard' area (outside the HC-2 and HC-3 structures but within the facility boundary) that are determined to be LTHC3 may also undergo demolition and final remediation. Demolition and remediation activities are anticipated to include the use of equipment such as dump trucks, front-end loaders, graders, fork lifts, cranes, etc. The activities may require the use of scaffolding or other temporary structures to facilitate demolition.

Demolition and final remediation impacts on adjacent nuclear facilities shall be evaluated using the USQ process and may be pursued, provided the USQ evaluation yields a negative USQ.

For buildings and utilities that are not designated as LTHC3 in the existing DSA, a Hazard Categorization demonstrating that the building/utilities are LTHC3 shall be prepared and submitted to DOE-RL as a separate document or summarized in the DSA for approval. Upon approval, the demolition and final remediation activities associated with the buildings and utilities adjacent to the nuclear facilities shall be evaluated using the USQ process and, provided the USQ review yields a negative USQ, they may undergo demolition and final remediation using an approved Health and Safety Plan and applicable SMPs. Demolition and remediation activities are anticipated to include the use of equipment such as dump trucks, front-end loaders, graders, fork lifts, cranes, etc. The activities may require the use of scaffolding or other temporary structures to facilitate demolition. The DSA, if not revised during the Hazard Categorization process, will be revised to reflect this new hazard categorization and building status in the next annual update as appropriate.

6.0 Prevention of Inadvertent Criticality

6.1 Introduction

This chapter describes the CHPRC Criticality Safety Program (CSP) as specified by DOE-STD-3009-2014, Chapter 6, "Prevention of Inadvertent Criticality."

6.2 Governing Documents

The CHPRC CSP is described in PRC-NS-00004, *CH2M HILL Plateau Remediation Company Criticality Safety Program Description Document*. A summary of the CSP, including specific key attributes (KAs), is provided in Chapter 6 of HNF-11724. All KAs have been implemented at PUREX except for KA 6-6, "Criticality Alarm Systems." Criticality alarm systems are not required in Limited Control Facilities. The Criticality Safety Program is implemented in HNF-7098 at the site level, and in PRC-PRO-NS-52334, *Criticality Safety*, for PUREX at the project level. This project procedure provides details that reinforce HNF-7098 and identify approved exceptions that may apply to PUREX.

6.3 Criticality Safety Program

Both the 202A Building and the Storage Tunnels are Limited Control Facilities per HNF-7098. A Limited Control Facility is defined as a facility in which greater than half of a minimum critical mass is present, a criticality is documented to be incredible, and limits and controls are required to maintain incredibility. PRC-PRO-NS-52334 requires that all Criticality Safety Evaluation Reports demonstrate that a criticality is incredible to allow operation as a Limited Control Facility. Specifically, criticality incredibility has been shown for limited activities in the PUREX 202A Building, including surveillance, maintenance, removal of Pu-contaminated equipment, and storage of TRU-bearing waste containers as documented in WHC-SD-SQA-CSA-511. No activities involving 15 g or more of Pu are authorized. CHPRC-03416 has shown that grouting operations and continued storage in the PUREX tunnels are exempt from criticality safety control. TSR AC D.5.3 "Nuclear Criticality Safety" ensures that a criticality safety program exists at the PUREX Facility. This makes certain that future activities are analyzed with respect to criticality safety requirements.

6.4 Supporting Safety Management Programs

Implementation of the CSP at PUREX is supported by several Safety Management Programs and processes.

CRD O 422.1, *Conduct of Operations*, is implemented at CHPRC through the specifications noted in Section 11.3 of HNF-11724. Each nuclear facility is required to establish an implementing matrix that addresses each of the guideline requirements from CRD O 422.1. These guidelines support mission success and promote worker, public, and environmental protection. It was stated in CRD O 422.1 that a Conduct of Operations Program supports ISMS by providing techniques and practices to implement the Core Functions of 'Develop and Implement Hazard Controls' and 'Perform Work Within Controls.' It is stated in Section 1.2.3

of HNF-7098 that the CHPRC Criticality Safety Program applies the principles of ISMS in developing, authorizing, and implementing criticality safety documents.

The Quality Assurance (QA) Program SMP is presented in Section 14 of HNF-11724. The QA Program establishes requirements for several activities as discussed in Section 14 of HNF-11724: work process, design, procurement, inspection and testing for acceptance, and assessments (management and independent). Section 1.4 of HNF-7098 assigns responsibilities to several groups within CHPRC. In particular, Section 1.4.9 assigns the Quality Assurance Program responsibility to verify equipment design features and installations essential to criticality safety, as requested by the CSR or criticality safety engineer, and to verify compliance with other criticality safety limits, upon request.

The QA Program also establishes the provisions for CHPRC configuration management as noted in Section 17.4.2 of HNF-11724. Engineering configuration control requirements were stated to be further described in engineering implementing procedures. Section 6.3 of HNF-7098 acknowledges one such procedure, PRC-PRO-EN-20050, *Engineering Configuration Management*, in specifying safety significant safety features on a safety equipment list.

The provisions of the Initial Testing, In Service Surveillance, and Maintenance SMP are applicable to facility systems or equipment that provide a preventive and/or mitigative function as noted in the DSA hazard evaluation. Section 10 of HNF-11724 presents six key attributes of the CHPRC initial testing, in service surveillance, and maintenance program that support the implementation of criticality safety limits and controls. Initial testing and subsequent surveillance and maintenance are specifically discussed for fixed neutron absorber systems and criticality accident alarm systems in HNF-7098. In addition, all other active, safety significant, engineered safety features, as detailed on the safety equipment list, must have operability conditions and surveillance specifications in the TSRs.

It is noted in Section 12.4 of HNF-11724 that CHPRC Training Program develops, implements, and manages a program that includes identification of known requirements, definition of training standards, implementation of program training classes, certification/qualification of required skills, and verification of ongoing job qualifications. Section 1.4.10 of HNF-7098 assigns the Training Program responsibility to provide a formal criticality safety training program for certified fissionable material handlers, qualified fissionable material operators, supervisors, CSRs, and support personnel as described in Section 3 of that document

7.0 Safety Management Programs

7.1 Radiation Protection

The Radiation Protection Program (RPP) implements applicable regulatory (10 CFR 835 "Occupational Radiation Protection") and other contractual requirements. The program is based on a functional or operational organization implementing the necessary requirements. The RPP is described in Chapter 7.0 of HNF-11724. No exceptions are taken to the RPP KAs as described in HNF-11724.

7.2 Fire Protection

The Fire Protection SMP ensures that sufficient fire protection is provided to protect the health and safety of employees and the health and welfare of the public in the event of a fire, to prevent unacceptable delays in vital DOE Programs, and to prevent exceeding specific dollar-loss values should a fire occur.

The fire hazards are identified in CP-41822. Activities described in this DSA will be performed consistent with the requirements of the Hanford Site Fire Protection Program. Facility-specific controls and recommendations are identified in the FHA. The Fire Protection Program is described in Chapter 11 of HNF-11724. Fire protection KAs described in HNF-11724 apply to PUREX; exception is taken to KA 11-5 related to fire suppression systems. There are no safety basis requirements for the deactivated 202A Canyon Building fire suppression system. NFPA inspection, testing, and maintenance requirements are not applicable to this deactivated system.

7.3 Maintenance

The PUREX Facility is in the S&M phase of its life cycle, with limited occupancy for S&M activities. PUREX Facility buildings are normally locked, and access is controlled by approved procedures of the CPRM Organization. The scope of activities to be performed is summarized in Section 2.4. The Initial Testing, In-service Surveillance, and Maintenance Program is found in Chapter 10.0 of HNF-11724. No exceptions are taken to the KAs as described in HNF-11724.

7.4 Procedures

The procedure development program employs a graded approach to ensure that work processes are controlled by approved instructions, procedures, design documents, technical standards, or other hazard controls adopted to meet regulatory or contractual requirements appropriate to the specific tasks to be performed. A description of the procedures development and training programs may be found in Chapter 12.0 of HNF-11724. No exceptions are taken to the KAs as described in HNF-11724.

7.5 Training

The training program provides employees, required to perform specified job requirements, with the training necessary to become qualified and maintain qualification. A description of the

procedures development and training programs may be found in Chapter 12.0 of HNF-11724. No exceptions are taken to the KAs as described in HNF-11724.

7.6 Conduct of Operations

Conduct of Operations provides a formal and disciplined method for safely performing work and operating site facilities. Conduct of Operations is based on the concept that workers are provided with adequate knowledge of requirements, and are disciplined in observing these requirements. It is founded on training, qualification, and use of procedures. It promotes implementation of a set of standards that establishes safe operations. Provisions of the program specify that: appropriately-trained personnel using approved, adequate, and controlled procedures perform work; that this work is properly supervised; that prior approval is obtained for the work; and that accountability exists for work performance.

The Conduct of Operations SMP is implemented at the PUREX Facility consistent with the description provided in Chapter 11 of HNF-11724, which provides a summary description of Conduct of Operations applicable for use at the PUREX Facility.

7.7 Quality Assurance

CHPRC implements a Quality Assurance (QA) program meeting the requirements of 10 CFR 830, Subpart A, "Quality Assurance Requirements," in accordance with PRC-MP-QA-599, *Quality Assurance Program*. The QA program is described in Chapter 14.0 of HNF-11724. No exceptions are taken to the KAs as described in HNF-11724.

7.8 Emergency Preparedness

CHPRC implements the DOE Emergency Management Plan through its EPP. The implementing organization prepares and maintains hazard assessments and response plans for applicable facilities. Facility staff is trained and practice drills are used to ensure a timely and effective response should an emergency occur. While the CPRM Organization will perform drills annually, they will not be performed for every facility annually. The EPP is described in Chapter 15.0 of HNF-11724. No exceptions are taken to the KAs as described in HNF-11724.

There are WRPS facilities on the PUREX Facility footprint within 100 m (328 ft) of the PUREX Facility, maintained and operated by WRPS. See Section 2.3 for a discussion of consideration of WRPS personnel during emergency conditions at PUREX.

7.9 Radioactive and Hazardous Waste Management

The Radioactive and Hazardous Waste Management Program is found in Chapter 9.0 of HNF-11724. No exceptions are taken to the KAs as described in HNF-11724.

7.10 Hazardous Material Protection

The Hazardous Material Protection Program is found in Chapter 8.0 of HNF-11724. No exceptions are taken to the KAs as described in HNF-11724.

7.11 Provisions for Decontamination and Decommissioning

Certain tanks both inside and outside the 202A Canyon Building, the process cells, and the PUREX Storage Tunnels are managed as final status TSD storage units under the RCRA Part B Permit. The process for D&D of the rest of the PUREX Facility will be regulated under the *Comprehensive Environmental Response, Compensation, and Liability Act*.

A description of the D&D program is provided in Chapter 16.0 of HNF-11724. Execution of the D&D SMP ensures that D&D activities are performed in compliance with applicable federal and state laws and regulations, provisions for D&D are developed, and that modifications to facilities or newly-constructed facilities include features to simplify future D&D activities. No exceptions are taken to the KAs as described in HNF-11724.

7.12 Management, Organization, and Institutional Safety Provisions

The details of Management, Organization, and Institutional Safety policies are summarized in Chapter 17.0 of HNF-11724. No exceptions are taken to the KAs as described in HNF-11724.

8.0 References

02-ABD-0091, 2002, "Contract No. DE-AC06-96RL13200 – FHI Nuclear Safety Expectation for Nuclear Facilities in Surveillance and Maintenance" (letter from K. A. Klein to E. K. Thomson, Fluor Hanford, Inc., May 8, 2002) U.S. Department of Energy, Richland, Operations Office, Richland, Washington.

10 CFR 830, "Nuclear Safety Management," *Code of Federal Regulations*, as amended.

10 CFR 835, "Occupational Radiation Protection," *Code of Federal Regulations*, as amended.

40 CFR 61, "National Emissions Standards for Hazardous Air Pollutants," *Code of Federal Regulations*, as amended.

40 CFR 70, "State Operating Permit Programs," *Code of Federal Regulations*, as amended.

40 CFR 265, "Interim Status Standards for Owners and Operators of Hazardous Waste Treatment, Storage, and Disposal Facilities," *Code of Federal Regulations*, as amended.

Comprehensive Environmental Response, Compensation, and Liability Act of 1980, 42 U.S.C. 9601, et seq.

CHPRC-02287, 2015, *Determination of ARF*RF for Explosion Accidents and Fire Accidents Involving Plastic Surfaces*, Rev 1, CH2M HILL Plateau Remediation Company, Richland, Washington.

CHPRC-03416, 2018, *CSER 17-002: Grouting PUREX Tunnels*, Rev 1, CH2M HILL Plateau Remediation Company, Richland, Washington.

CHPRC-03519, 2017, *PUREX Tunnel 1 Stabilization Acceptance Specification*, Rev. 1, CH2M HILL Plateau Remediation Company, Richland, Washington.

CHPRC-03587, 2018, *Functional Design Criteria for PUREX Tunnel 2 Stabilization Grouting System*, Rev. 0, CH2M HILL Plateau Remediation Company, Richland, Washington.

CHPRC-1204181, 2012, "Estimated PUREX Tunnels Concrete Dose," (internal letter from J. E. Kurtz, to R. D. Carrell, September 24), CH2M HILL Plateau Remediation Company, Richland, Washington.

CHPRC-NS-17-003, "Email Discussion of 324 Building Hot Cell Stored Waste Radiolytic Hydrogen Production in PUREX Storage Tunnel 2"

CP-41822, 2018, *Fire Hazard Analysis for Plutonium-Uranium Extraction Plant*, Rev. 5, CH2M HILL Plateau Remediation Company, Richland, Washington.

CP-51329, 2014, *Evaluation of TSR Compliance for the 224-T Waste Storage Area and all Surveillance and Maintenance Satellite Accumulation Waste Areas*, Rev. 2, CH2M HILL Plateau Remediation Company, Richland, Washington.

CP-59591, 2016, *Hazard Categorization for Plutonium-Uranium Extraction Facilities 203-A, 211-A, 214-A, 271-AB*, Rev. 0, CH2M HILL Plateau Remediation Company, Richland, Washington.

CP-59723, 2016, *Assessment of Aircraft Impact on CPS&M Nuclear Facilities in the 200 East and West Areas*, Rev. 0, CH2M HILL Plateau Remediation Company, Richland, Washington.

CPSM-PRO-MN-50717, 2014, *REDOX Sand Filter In-Place Leak Test (Aerosol Test)*, Rev. 1-2, CH2M HILL Plateau Remediation Company, Richland, Washington.

CPSM-PRO-OP-50668, *Surveillance of PUREX Facility*

CRD O 420.1C, *Facility Safety*, as supplemented or amended by CHPRC contract, U.S. Department of Energy, Richland, Washington.

CRD O 422.1, *Conduct of Operations*, as supplemented or amended by CHPRC contract, U.S. Department of Energy, Richland, Washington.

CRD O 435.1, *Radioactive Waste Management*, as supplemented or amended by CHPRC contract, U.S. Department of Energy, Washington, D.C.

DOE G 423.1-1B, *Implementation Guide for Use in Developing Technical Safety Requirements*, U.S. Department of Energy, Washington, D.C.

DOE G 424.1-1B, *Implementation Guide for Use in Addressing Unreviewed Safety Question Requirements*, U.S. Department of Energy, Washington, D.C.

DOE-HDBK-3010-94, 2000, *Airborne Release Fractions/Rates and Respirable Fractions for Nonreactor Nuclear Facilities*, Change Notice No. 1, U.S. Department of Energy, Washington, D.C.

DOE/RL-92-36, *Hanford Site Hoisting and Rigging Manual*, as amended, U.S. Department of Energy, Richland Operations Office, Richland, Washington.

DOE/RL-98-35, *Surveillance and Maintenance Plan for the Plutonium-Uranium Extraction (PUREX) Facility*.

DOE-STD-1027-92, 1997, *Hazard Categorization and Accident Analysis Techniques for Compliance with DOE Order 5480.23, Nuclear Safety Analysis Reports*, Change Notice No. 1, U.S. Department of Energy, Washington, D.C.

DOE-STD-1120-2005, 2005, *Integration of Environment, Safety, and Health into Facility Disposition Activities*, U.S. Department of Energy, Washington, D.C.

DOE-STD-1120-2016, 2016, *Preparation of Documented Safety Analysis for Decommissioning and Environmental Restoration Activities*, U.S. Department of Energy, Washington, D.C.

DOE-STD-1186-2016, 2016, *Specific Administrative Controls*, U.S. Department of Energy, Washington, D.C.

DOE-STD-3009-2014, *Preparation of Nonreactor Nuclear Facility Documented Safety Analysis*, U.S. Department of Energy, Washington, D.C.

DOE-STD-3011-2016, 2016, *Preparation of Documented Safety Analysis for Interim Operations at DOE Nuclear Facilities*, U.S. Department of Energy, Washington, D.C.

DOE-STD-3014-2006, 2006, *Accident Analysis for Aircraft Crash into Hazardous Facilities*, U.S. Department of Energy, Washington, D.C.

GE 1955, *Specifications for Disposal Facility for Failed Equipment*, General Electric, Richland, Washington.

H-2-52064, 1953, *Scope – Architectural Typical Cross Section*, General Electric, Richland, Washington.

HNF-7098, *Criticality Safety Program*, as amended, CH2M HILL Plateau Remediation Company, Richland, Washington.

HNF-11698, 2002, *PUREX Roof Collapse Accident Analysis*, Rev. 0, Fluor Hanford, Inc., Richland, Washington.

HNF-11724, 2018, *CH2M HILL Plateau Remediation Company Safety Management Programs*, Rev 14, CH2M HILL Plateau Remediation Company, Richland, Washington.

HNF-EP-0063, *Hanford Site Solid Waste Acceptance Criteria*, as amended, CH2M HILL Plateau Remediation Company, Richland, Washington.

HNF-SD-CP-CR-037, 1997, *PUREX Heating, Ventilation, and Air Conditioning Consolidation Document*, Rev. 2, B&W Hanford Company, Richland, Washington.

HNF-SD-CP-HIE-002, 1997, *Plutonium-Uranium Extraction (PUREX) Facility Storage Tunnel Hazard Analysis*, Rev. 0, B&W Hanford Company, Richland, Washington.

HW-11103, 1948, *200 Areas Sand Filter Program*, Hanford Works, Richland, Washington.

HW-31000, 1955, *PUREX Technical Manual*, General Electric, Richland, Washington.

ICRP 68, 1994, *Dose Coefficients for Intakes of Radionuclides by Workers*, International Commission on Radiological Protection, Elsevier Ltd., Tarrytown, New York.

ICRP 71, 1995, *Age-Dependent Doses to Members of the Public of Radionuclides – Part 4 Inhalation Dose Coefficients*, International Commission on Radiological Protection, Elsevier Ltd., Tarrytown, New York.

INEEL/EXT-04-02319, 2004, *Literature Review of the Effects of Radiation and Temperature on the Aging of Concrete*, Idaho National Engineering and Environmental Laboratory, Idaho Falls, Idaho.

OE-1: 2013:01, 2013, "Improving Department of Energy Capabilities for Mitigating Beyond Design Basis Events," Office of Health, Safety and Security, U.S. Department of Energy, Washington, D.C.

PRC-MP-QA-599, *Quality Assurance Program*, as amended, CH2M HILL Plateau Remediation Company, Richland, Washington.

PRC-NS-00004, *CH2M HILL Plateau Remediation Company Criticality Safety Program Description Document*, as amended, CH2M HILL Plateau Remediation Company, Richland, Washington.

PRC-PRO-EN-20050, *Engineering Configuration Management*, as amended, CH2M HILL Plateau Remediation Company, Richland, Washington.

PRC-PRO-NS-062, *Unreviewed Safety Question Process*, as amended, CH2M HILL Plateau Remediation Company, Richland, Washington.

PRC-PRO-NS-52334, *Criticality Safety*, as amended, CH2M HILL Plateau Remediation Company, Richland, Washington.

Resource Conservation and Recovery Act of 1976, 42 USC 6901, et seq.

RHO-MA-116, 1980, *PUREX Technical Manual*, Rockwell Hanford Operations, Richland, Washington.

SD-HS-SAR-001, 1985, *PUREX Final Safety Analysis Report*, Rev 3, Westinghouse Hanford Company, Richland, Washington.

WAC 173-303-400, "Interim Status Facility Standards," *Washington Administrative Code*, as amended.

WAC 173-401, "Operating Permit Regulations," *Washington Administrative Code*, as amended.

WAC 246-247, "Radiation Protection - Air Emissions," *Washington Administrative Code*, as amended.

WHC-SP-0479, 1989, *PUREX Technical Manual*, Westinghouse Hanford Company, Richland, Washington.

WHC-SD-SQA-CSA-511, 2014, *CSER 96-012, Facility Reclassification and Criticality Alarm System Shutoff for Deactivated PUREX*, Rev. 1, CH2M HILL Plateau Remediation Company, Richland, Washington.

Appendix A

Hazard Analysis Summary Data

Contents

A.1 Hazard Analysis Summary Data A-3

A.2 Hazard ID Discussions A-20

A.3 References A-28

Tables

Table A-1. Hazard Identification Checklist and Energy Designators A-5
Table A-2. Hazards Analysis A-12
Table A-3. Disposition of Energy Checklist Items A-22
Table A-4 Binning of Accidents A-26

Appendix A
Hazard Analysis Summary Data

A.1 Hazard Analysis Summary Data

A discussion of the Hazards Analysis (HA) methodology and results is presented in this section.

The HA focuses primarily on hazardous conditions that can lead to releases of material currently remaining within the Plutonium-Uranium Extraction (PUREX) Facility, and consequently the exposure of facility workers (FWs), co-located workers, or the offsite public. The information gathered during the HA was used to establish representative and bounding accident types, define a spectrum of accidents, and supports the assumptions used in the consequence analysis and control selection process.

In evaluating potential hazards associated with the PUREX Facility, existing safety basis documents were used as the primary source of information regarding the inventory and potential hazardous materials. Since the personnel involved in performing the HA were directly involved in the current activities at the PUREX Facility, the review team completed a more detailed hazard baseline checklist of potential hazards (Table A-1). The result of the hazard baseline checklist, combined with the current safety basis documents formed the basis for the HA process. The HA review team included nuclear safety, fire protection, engineering, operations, radiological control, and industrial safety personnel.

In preparing for the HA, other sources of information were used to determine potential hazards. Key documents considered included the following:

- HNF-SD-CP-ISB-004, *Plutonium Uranium Extraction (PUREX) End State Basis for Interim Operation (BIO) for Surveillance and Maintenance*
- HNF-SD-CP-HIE-004, *PUREX Deactivated End-State Hazard Analysis*

In addition, the FHA was developed in parallel with this HA and input was provided from the fire protection engineer regarding the fires of concern for this building. The FHA describes relevant fire scenarios and consequences regarding the PUREX Facility.

The frequency and consequence categories used by the HA team are presented in the main body of this DSA within Table 3-7 and Table 3-8. Using the scenario frequency and consequence categories assigned by the HA team from the analysis, the overall risk is determined using Table 3-9. Results of the HA are presented in Table A-2. These results were derived from the HA session and have not been altered to reflect actual consequence and dose rates. Note that, as a result of the stabilization of Storage Tunnel 1, the material with is no longer at risk (not MAR), therefore the Storage Tunnel 1 entries in Table A-2 have been deleted.

As part of the hazard identification process, standard industrial hazards (SIHs) are identified, documented, and then screened from further evaluation in the safety basis development effort. DOE-STD-3009-2014, *Preparation of Nonreactor Nuclear Facility Documented Safety Analysis* defines SIHs as “Hazards that are routinely encountered in general industry and construction, and for which national consensus codes and/or standards (e.g., Occupational Safety and Health

Administration, Transportation Safety) exist to guide safe design and operation without the need for special analyses to design safe design and/or operational parameters." Accidents that do not represent more than SIHs to the FW are identified in Table A-2 and screened from further evaluation in Table A-3.

Table A-4 bins the accidents evaluated in Table A-2 by accident type and identifies their accident analysis section in Chapter 3 when applicable.

The HA was reviewed and edited in 2016 to ensure consistency and flow from the HA to the analyzed accidents in Chapter 3. The following subject matter experts reviewed and concurred with the revisions made to the HA and Chapter 3:

- Radiological Control
- Fire Protection
- Facility Operations
- Nuclear Safety
- Engineering
- Occupational Safety and Health
- Emergency Preparedness
- Criticality Safety
- Environmental Protection

Table A-1. Hazard Identification Checklist and Energy Designators

LOTE Low Thermal Energy		AE Acoustic Energy		BIO Biological	
☒ 1	Cryogenic Systems	☐ 1	Equipment /Platform Vibration	☒ 1	Animal/Insect Hazard
☐ 1.1	Freeze Seal Equipment	☒ 2	Equipment Rooms	☒ 1.1	Dead Animals
☒ 1.2	Liquid N_2 in Dewars	☒ 2.1	Motor Rooms	☒ 1.2	Animal Droppings
☐ 1.3	Liquid N_2 in Tanks	☐ 2.2	Pump Rooms	☒ 1.3	Animal Bites
☐ 1.4	Liquid N_2 Production	☒ 2.3	Ran Rooms	☒ 1.4	Insect Bites
☐ 1.5	Other Cryogenic Systems _____	☐ 2.4	Compressor Rooms	☒ 1.5	Insect Stings
☒ 2	Low Ambient Temperatures	☐ 2.5	Other Equipment Rooms _____	☒ 2	Plant Hazards
☒ 2.1	Loss of HVAC [system impacts]	☒ 3	Decontamination & Size Reduction Tools	☒ 2.1	Allergens
☐ 2.3	Freezers/Chillers	☒ 3.1	Cutting Devices	☐ 2.2	Toxins
☐ 2.4	Other Low Temperatures _____	☒ 3.2	Decontamination Devices	☒ 3	Disease Related Hazards
☐ 3	Other LOTE Hazards _____	☒ 3.3	Abrading Devices	☒ 3.1	Bacteria
		☐ 3.4	Other AE Tools _____	☒ 3.2	Viruses
		☐ 4	Other AE Hazards _____	☐ 3.3	Sewage
				☐ 3.4	Blood/Body Fluids
				☐ 3.5	Medical Waste
				☐ 4	Other BIO Hazards _____

Table A-1. Hazard Identification Checklist and Energy Designators

NPH Natural Phenomena		OTH Other		KE Kinetic Energy	
☒ 1	Earthquakes	☒ 1	Inert/Low O_2 Atmosphere	☒ 1	Vehicle/Transport Devices in Motion
☒ 2	Natural Radiation	☒ 1.1	Dust [breathing]	☒ 1.1	Rail Cars/Trains
☒ 3	Lightning	☒ 1.2	N_2/He Atmosphere	☒ 1.2	Excavators/Backhoes
☒ 4	Solar/Heat Wave	☒ 1.3	Confined Spaces	☒ 1.3	Cranes/Crane Loads
☒ 5	Range Fire	☒ 1.3.1	Tanks	☒ 1.4	Trucks/Cars
☒ 6	Dust/Sand	☐ 1.3.2	Basins	☒ 1.5	Forklifts/Loaders
☒ 7	Fog	☒ 1.3.3	Manholes	☐ 1.6	Conveyors
☒ 8	Heavy Rain	☒ 1.3.4	Pits	☒ 1.7	Man-Powered Devices in Motion
☒ 8.1	Flooding [from rain]	☒ 1.4	Trench/Excavation Collapse	☒ 1.7.1	Hoists
☐ 8.2	Sediment Transport	☒ 1.5	Water in Confined Space	☒ 1.7.2	Carts/Dollies
☒ 9	Hail	☐ 1.6	Other Low O_2 Atmospheres _____	☒ 1.8	Other Device in Motion Drilling Vehicles
☒ 10	Low Temperatures	☒ 2	Inadequate Visibility	☒ 2	Loaded Transports in Motion
☒ 11	Freeze	☒ 2.1	Respirator Fogging	☒ 2.1	Crane Loads [loaded]
☒ 12	Heavy Snow	☒ 2.2	Dust [visibility] in yard	☒ 2.2	Trucks [loaded]
☒ 13	High Winds	☒ 2.3	Glare	☒ 2.3	Forklifts [loaded]
☒ 14	Tornadoes	☐ 2.4	Other Impaired Visibility _____	☐ 2.4	Conveyors [loaded]
☐ 15	Volcanos	☒ 3	External/Offsite Event	☒ 2.5	Loaded Man-Powered Transports in Motion
☒ 16	Volcanic Ash	☒ 3.1	Aircraft Crash	☒ 2.5.1	Hoists [loaded]
☐ 17	Other NPH _____	☐ 3.2	Offsite Transportation Accident	☒ 2.5.2	Pallet Jacks [loaded]
		☒ 3.3	Offsite Explosion	☒ 2.5.3	Carts/Dollies [loaded]
		☒ 3.4	Major Fire	☐ 2.6	Other Transport in Motion _____
		☐ 3.5	Reservoir Failure	☒ 3	Decontamination & Size Reduction Tools
		☐ 3.6	Other External Event _____	☒ 3.1	Impact Tools
		☒ 4	Unknown Material	☒ 3.2	Projectile Tools
		☒ 5	Unknown Configuration	☐ 3.3	Other KE Tools _____
		☐ 6	Other OTH Hazards _____	☐ 4	Relief Valve Blow-down
				☐ 5	Other KE Hazards _____

Table A-1. Hazard Identification Checklist and Energy Designators

LOEE Loss of Electrical Energy		CM Chemical Materials		CE Chemical Energy	
☒ 1	Loss of Powered Equipment	☒ 1	Toxins	☒ 1	Oxidizers
☒ 1.1	Motor Stoppage	☒ 1.1	Hepatotoxins [Carbon Tetrachloride]	☐ 1.1	Organic Peroxides
☒ 1.2	Pump Stoppage	☐ 1.2	Nephrotoxins [Chloroform]	☒ 1.2	Corrosives/Acids/Reagents/Bleaches [in use]
☒ 1.3	Fan Stoppage in areas with Differential Pressure	☒ 1.3	Neurotoxins [Mercury]	☒ 1.3	Residual Corrosives/Acids
☐ 1.3.1	Flow Reversal	☒ 1.4	Reproductive Toxins [Lead]	☒ 1.4	Battery Banks
☐ 1.3.2	Supply Fan Pressurization	☐ 1.5	Toxic Agents [Strychnine]	☐ 1.5	Other Oxidizers
☒ 1.3.3	Static Air Situation	☒ 1.6	Agents that Attack the Lungs [Asbestos]		_____
☒ 1.4	Fan Stoppage in Ventilated Areas	☒ 1.6.1	Ceiling tiles/Insulation	☐ 2	Reactives
☒ 1.4.1	Accumulation of Hazardous Vapors	☒ 1.7	Agents that Attack the Skin [Acetone]	☐ 2.1	Water Reactives [Sodium]
☒ 1.4.2	Accumulation of Asphyxiants	☒ 1.8	Agents that Attack the Eyes [Organic Solvents]	☐ 2.2	Shock Sensitive Chemicals [Nitrates]
☒ 1.4.3	Accumulation of Flammable Gases	☒ 1.9	Agents that Attack the Mucous Membranes [Ammonia]	☐ 2.3	Peroxides/Superoxides/Ethers
☐ 1.5	Compressor Stoppage	☒ 1.10	Agents that Attack the Blood [Carbon Monoxide/Cyanides]	☐ 2.4	Explosive Substances
☐ 1.5.1	Loss of Air [dry-pipe]	☒ 1.11	Carcinogens [Carbon Tetrachloride PCBs]	☐ 2.4.1	Electric Squibs
☐ 1.5.2	Loss of Air [no inert]	☒ 1.12	Sensitizers [Beryllium/Epoxy Resins]	☐ 2.4.2	Dynamites/Caps/Primer Cord
☐ 1.5.3	Reduced PPE Pressure	☒ 1.13	Irritants [Calcium Chloride]	☐ 2.4.3	Dusts [explosive]
☒ 1.6	Loss of Heaters	☒ 1.14	Pesticides/Insecticides	☐ 2.5	Other Reactives
☒ 1.6.1	System Freeze Impacts	☒ 1.15	Herbicides		_____
☒ 1.6.2	Worker Freeze Impacts	☐ 1.16	Other Toxins	☒ 3	Other Chemical Energy Hazards
☒ 1.7	Loss of Coolers/Chillers		_____	☒ 3.1	Corrosion/Oxidation [rust]
☒ 1.7.1	System Overheat Impacts	☒ 2	Asphyxiants	☒ 3.2	Bonding Agents
☒ 1.7.2	Worker Overheat Impacts	☒ 3	Miscellaneous Chemicals/Groups	☒ 3.2.1	Sealants/Fixatives
☐ 1.8	Misdirected Flow due to loss of Valves/Dampers	☒ 3.1	Hazardous Wastes [RCRA, TSCA]	☒ 3.2.2	Epoxies/Adhesives
☒ 1.9	Loss Instrumentation	☒ 3.2	Creosote	☒ 3.3	Refrigerants/Coolants [Propylene Glycol]
☐ 1.10	Other Equipment Loss	☐ 3.3	Other Miscellaneous Chemicals	☐ 3.4	Water Treatment Products
	_____		_____	☒ 3.5	Decontamination Chemicals
☒ 2	Inadequate Light/Illumination	☐ 4	Other CM Hazards	☒ 3.6	Miscellaneous Laboratory Chemicals
☒ 2.1	Operations Impacts		_____	☐ 3.7	Soil/Air/Water Reactions [Buried Materials]
☒ 2.2	Worker Impacts			☒ 4	Incompatible Wastes
☒ 3	Loss of Batteries/Direct Current Systems			☐ 5	High Temperature Wastes
☒ 4	Other LOEE Hazards LOEE for portable equipment			☐ 6	Other CE Hazards
	_____				_____

Table A-1. Hazard Identification Checklist and Energy Designators

ME Mechanical Energy		TP Thermal Potential Energy		EE Electrical Energy	
☒ 1	Transverse [single direction] Motion Devices	☒ 1	Flammable Gases	☒ 1	High Voltage Equipment
☒ 1.1	Forklift Tines [puncture]	☒ 1.1	Natural Gas/Propane	☒ 1.1	Power Transmission Equipment
☒ 1.2	piston Compressors [crush]	☒ 1.2	Welding/Cutting Gases	☒ 1.1.1	Wiring [high voltage]
☐ 1.3	Presses [crush]	☐ 1.3	Laboratory/Calibration Gases	☒ 1.1.2	Overhead Transmission Lines
☒ 1.4	Pinch Points [pinch]	☐ 1.3.1	Methane/Butane	☒ 1.1.3	Transformers [high voltage]
☒ 1.5	Sharp Edges/Objects [cut]	☐ 1.3.2	H_2 [lab]	☒ 1.1.4	Switchgear [high voltage]
☒ 1.6	Drills [puncture]	☒ 1.4	Process/Reaction Off-Gases	☐ 1.2	Capacitor Banks
☒ 1.7	Sanders/brushes [wear]	☒ 1.4.1	H_2 [containers]	☐ 1.3	Lightning Grids
☒ 1.8	Shears/Pipe Cutters [shear]	☐ 1.4.2	H_2 [process]	☐ 1.4	Other High Voltage Hazards _____
☒ 1.9	Grinders [crush/pinch/shear]	☐ 1.4.3	Sewer Gas	☒ 2	Low Voltage Equipment
☐ 1.10	Other Transverse Motion _____	☐ 1.4.4	Carbon Monoxide	☒ 2.1	480/240/120 Volt Equipment
☒ 2	Reciprocating [back and forth] Motion Devices	☐ 1.5	Other Flammable Gases _____	☒ 2.1.1	Wiring [low voltage]
☒ 2.1	Vibration [wear]	☒ 2	Flammable/Combustible Liquids	☒ 2.1.2	Cable Runs
☒ 2.2	Saws [cut]	☒ 2.1	HEPA Test Aerosol Fluid	☒ 2.1.3	Overhead Wiring
☐ 2.3	Other Reciprocating Motion _____	☒ 2.2	Petroleum Based Products	☒ 2.1.4	Underground Wiring
☒ 3	Circular Motion Devices	☒ 2.2.1	Gasoline Forklifts	☒ 2.1.5	Transformers [low voltage]
☒ 3.1	Belts/Hoist Cables [pull/wrap]	☒ 2.2.2	Diesel Fuel	☒ 2.1.6	Switchgear [low voltage]
☒ 3.2	Bearings/Shafts [wrap]	☒ 2.2.3	Oils [lube, coolant]	☒ 2.1.7	Service Outlets
☒ 3.3	Gears/Couplings [pull]	☒ 2.2.4	Grease	☒ 2.1.8	Other Electrical Equipment _____
☒ 3.4	Diesel Generators/Turbines [wrap]	☒ 2.3	Vehicle/Equipment Fuel Tanks	☒ 2.2	Temporary Power Equipment
☒ 3.5	Pumps [wrap]	☒ 2.3.1	Gasoline [tank]	☒ 2.2.1	Diesel Units
☒ 3.6	Fans [wrap]	☒ 2.3.2	Diesel Fuel [tank]	☒ 2.2.2	Battery Banks
☒ 3.7	Rotary Compressors [wrap]	☒ 2.4	Paint/Cleaning/Decontamination Solvents	☒ 2.2.3	12-32 V DC Systems
☐ 3.8	Centrifuges [wrap]	☒ 2.5	Paints/Epoxies/Resins	☐ 2.2.4	Other Temporary Electrical _____
☒ 3.9	Drills/Rotary Sanders [wrap]	☐ 2.6	Other Flammable Liquids _____	☒ 2.3	Electrical Equipment [low voltage]
☒ 3.10	Grinders [wrap]	☒ 3	Combustible Solids	☒ 2.3.1	Motors
☒ 3.11	Other Circular Motion rotary cleaner _____	☒ 3.1	Paper/Wood Products	☒ 2.3.2	Pumps
☐ 4	Other Me Hazards _____	☒ 3.2	Cloth/Rags	☒ 2.3.3	Fans
		☒ 3.3	Rubber	☒ 2.3.4	Compressors
		☒ 3.4	Plastic Materials	☒ 2.3.5	Heaters
		☒ 3.4.1	Size reduction Tents/Permacons	☒ 2.3.6	Valves/Dampers
		☒ 3.4.2	Benelex/Lexan/HDPE	☒ 2.3.7	Power Tools
		☒ 3.4.3	Rigid Liners/Poly-Liners Bagging Materials	☒ 2.3.8	Instrumentation
		☒ 3.5	Other Combustible Solids Containment tents _____	☐ 2.3.9	Other Electrical Use Equipment _____
				☐ 2.4	Grounding Grids
				☒ 2.5	Static Charger
				☒ 2.6	Other Low Voltage Hazards _Lights & cameras for Tunnel 2 stabilization._____

Table A-1. Hazard Identification Checklist and Energy Designators

RE Radiant Energy		RM Radioactive Material		TE Thermal Energy	
☒ 1	Direct Radiation Sources	☒ 1	Fissile Material [Metals/Oxides/Residues]	☒ 1	Chemical Reactions
☒ 1.1	Calibration Sources	☒ 1.1	Bag	☐ 2	Pyrophoric Material
☒ 1.2	Other Radioactive Material	☒ 1.2	Glovebox [exposed]	☐ 2.1	Plutonium/Uranium Metal
☒ 1.2.1	Fissile Material Storage/Holdup	☒ 1.3	Can	☐ 2.2	Pyrophoric Chemicals
☐ 1.2.2	Actinide Solutions	☐ 1.4	Welded Can	☐ 2.3	Other Pyrophoric Material
☒ 1.2.3	Waste Containers	☒ 1.5	Drum		_____
☒ 1.2.4	Contamination	☒ 1.6	Overpack	☒ 3	Spontaneous Combustion Material
☐ 1.3	Other Direct Radiation Hazards	☒ 1.7	Type B Shipping Container	☒ 3.1	Petroleum Based Products
	_____	☒ 1.8	Ducting [exposed]	☒ 3.2	Reactive Chemicals
☐ 2	Ionizing Radiation Devices	☒ 1.9	Plenum [exposed]	☒ 3.3	Nitric Acids/Organics
☐ 2.1	Radiography Equipment	☒ 1.10	Filter [exposed]	☒ 3.4	Paint/Cleaning/Decontamination Solvents
☐ 2.2	X-Ray Machines	☐ 1.11	Cooler	☒ 4	Open Flame Sources
☐ 2.3	Electron Beams	☒ 1.12	Hood [exposed]	☒ 4.1	Cutting Torches
☐ 2.4	Ultra-Intense Lasers	☐ 1.13	Other Solid Fissile Material	☒ 4.2	Welding Torches
☐ 2.5	Accelerators		_____	☐ 4.3	Laboratory Burners
☐ 2.6	Other Ionizing Hazards	☐ 2	Actinide Solution	☐ 4.4	Other Open Flames
	_____	☐ 2.1	Bottle		_____
☒ 3	Non-Ionizing Radiation Sources	☐ 2.2	Drum	☒ 5	Heating Devices/Systems
☐ 3.1	Electromagnetic Sources	☒ 2.3	Piping	☒ 5.1	Furnaces
☐ 3.1.1	Electromagnetic Communication Waves	☒ 2.4	Tank	☐ 5.2	Boilers
☐ 3.1.2	Radio-Frequency Generators	☐ 2.5	Other Liquid Fissile Material	☒ 5.3	Heaters
☐ 3.1.3	Microwave Frequencies		_____	☐ 5.4	Hot Plates
☐ 3.1.4	Electromagnetic Fields	☒ 3	Waste [LLW/LLM/TRU/TRM]	☐ 5.5	RTGs
☒ 3.1.5	Electric Furnaces	☒ 3.1	Bag	☐ 5.6	Other Heating Equipment
☐ 3.1.6	Computers	☒ 3.2	Glovebox [exposed]		_____
☒ 3.2	Welding/Cutting Devices	☒ 3.3	Drum	☒ 6	Radioactive Decay
☒ 3.2.1	Plasma Arc Magnetic Field	☒ 3.4	Metal Crate	☒ 7	High Temperature Items
☒ 3.2.2	Plasma Arc Infrared/Ultraviolet Light	☒ 3.5	Pipe Overpack Container	☐ 7.1	Lasers
☒ 3.2.3	Welding	☒ 3.6	Overpack	☐ 7.2	Incinerators/Fire Boxes
☒ 3.3	Low Power Lasers	☒ 3.7	Shipping Cask	☒ 7.3	Engine Exhaust Surfaces
☐ 3.4	Other Non-Ionizing Hazards	☒ 3.8	Ducting [exposed]	☐ 7.4	Steam Lines
	_____	☒ 3.9	Plenum [exposed]	☒ 7.5	Electrical Equipment
☒ 4	Potential RE Sources	☒ 3.10	Filter [exposed]	☒ 7.5.1	Electrical Wiring
☒ 4.1	Critical Masses	☒ 3.11	Hood [exposed]	☒ 7.5.2	Portable Lamps/Lighting
☒ 4.1.1	Solid Fissile Material	☒ 3.12	Wooden Crate	☒ 7.6	Welding/Cutting/Grinding Surfaces
☒ 4.1.2	Liquid Fissile Material	☒ 3.13	Cargo Container	☒ 7.6.1	Plasma Arc Surfaces
☒ 4.1.3	Containerized Fissile Material	☒ 3.14	Other Waste Material	☒ 7.6.2	Welding Surfaces
☒ 4.2	Irradiated Equipment		_____	☒ 7.6.3	Grinder/Saw Surfaces
		☒ 4	General Contamination	☒ 7.7	Friction Heated Surfaces
		☒ 4.1	Contamination Soils		

Table A-1. Hazard Identification Checklist and Energy Designators

RE Radiant Energy (cont'd)	RM Radioactive Material (cont'd)	TE Thermal Energy (cont'd)
☒ 4.3 Other Potential RE Hazards _____	☒ 4.2 Contaminated Water	☒ 7.7.1 Belts [friction]
☐ 5 Other RE Hazards _____	☒ 4.3 Contaminated Oil/Antifreeze	☒ 7.7.2 Bearings [friction]
	☒ 4.3 Other Contamination airborne areas _____	☒ 7.7.3 Gears [friction]
		☒ 7.7.4 Power Tools [friction]
		☒ 7.7.5 Motors/Fans [Friction]
	☐ 5 Burial Grounds	☐ 7.8 Other High Temperature Items _____
	☒ 6 Other RM Hazards _Tunnels_____	☒ 8 High Ambient Temperature Areas
		☒ 8.1 Loss of Ventilation
		☐ 8.2 Areas Around Furnaces/Boilers
		☒ 8.3 Multiple Layers PPE
		☐ 9 Other TE Hazards _____

Table A-1. Hazard Identification Checklist and Energy Designators

PE Potential Energy		PE Potential Energy (cont'd)		PE Potential Energy (cont'd)	
☒ 1	Pressure-Related PE Hazards	☐ 1.4.5	Fire Suppression Systems	☐ 2.4.6	Other Elevated Surfaces
☒ 1.1	Compressed Gases	☐ 1.4.6	Other Pressurized Systems		_____
☒ 1.1.1	Breathing Air/Compressed Air/O_2		_____	☐ 2.5	Other Gravity PE Hazards
☒ 1.1.2	He/Argon/Specialty Gases	☒ 1.5	Vacuum Systems		_____
☒ 1.1.3	Refrigerants/CO_2 Bottles	☐ 1.6	Other Pressure PE Hazards	☒ 3	Momentum-Related PE Hazards
☒ 1.1.4	Other Bottled Gases		_____	☒ 3.1	Moving Vehicle/Transport Devices
☒ 1.1.5	Gas/Air Receivers/Compressors	☒ 2	Gravity-Related PE Hazards	☒ 3.1.1	Rail Cars/Trains [in motion]
☐ 1.1.6	Other Compressed Gas	☒ 2.1	Elevated Equipment/Structures	☒ 3.1.2	Cranes [in motion]
	_____	☒ 2.1.1	Cranes/Hoists	☒ 3.1.3	Trucks [in motion]
☒ 1.2	High Pressure Gas Systems	☒ 2.1.2	Ducting/Lights/Piping	☒ 3.1.4	Forklifts/Loaders [in motion]
☐ 1.2.1	Pressure Vessels	☒ 2.1.3	Rollup Doors	☐ 3.1.5	Other Moving Materials
☐ 1.2.2	Instrument/Plant Air	☒ 2.1.4	Elevators		_____
☐ 1.2.3	Chemical Reaction Vessels/Autoclaves	☒ 2.1.5	Roofs/Plenums	☒ 3.2	Rotating Equipment
☐ 1.2.4	Furnaces/Boilers	☒ 2.1.6	Upper Floor Components	☒ 3.2.1	Bearings/Rollers/Shafts
☐ 1.2.5	Steam Header/Lines	☒ 2.1.7	Tanks/Solutions in Elevated Equipment	☒ 3.2.2	Gears/Couplings/Pivot Joints
☒ 1.2.6	Pneumatic Lines	☐ 2.1.8	Steam/Natural Gas Lines	☒ 3.2.3	Diesel Generators/Turbines
☒ 1.2.7	Impact Tools	☒ 2.1.9	Power Lines/Transformers	☒ 3.2.4	Pumps
☒ 1.2.8	Sand/CO_2 Blasting Equipment	☐ 2.1.10	Other Elevated Equipment	☒ 3.2.5	Fans/Air Movers
☐ 1.2.9	Other Pressurized Gas		_____	☒ 3.2.6	Rotary Compressors
	_____	☒ 2.2	Elevated Hazardous Materials	☐ 3.2.7	Centrifuges
☒ 1.3	High Pressure Liquid Systems	☒ 2.2.1	Crane Loads	☐ 3.2.8	Other Rotating Equipment
☐ 1.3.1	Water Heaters	☒ 2.2.2	Truck Loads		_____
☒ 1.3.2	Excavators/Backhoes [hydraulics]	☒ 2.2.3	Forklift/Other Lifts Loads	☐ 3.2	Other Momentum PE Hazards
☒ 1.3.3	Cranes [hydraulics]	☐ 2.2.4	Conveyor Loads		_____
☒ 1.3.4	Trucks/Cars [hydraulics]	☒ 2.2.5	Hoist Loads	☐ 4	Other PE Hazards
☒ 1.3.5	Forklifts [hydraulics]	☒ 2.2.6	Cart loads		_____
☐ 1.3.6	Conveyors [hydraulics]	☒ 2.2.7	Hand Carried Loads		
☒ 1.3.7	Hydrolazing Equipment	☒ 2.2.8	Stacked Hazardous Materials		
☒ 1.3.8	Tool Hydraulic Lines	☐ 2.2.9	Other Elevated Materials		
☒ 1.3.9	Solution Transfer Systems		_____		
☐ 1.3.10	Other Pressurized Liquids	☒ 2.3	Pits/Trenches/Excavations		
	_____	☒ 2.4	Elevated Work Surfaces		
☒ 1.4	Pressurized Systems/Components	☒ 2.4.1	Roofs/Elevated Doors/Loading Docks		
☒ 1.4.1	Coiled Springs	☒ 2.4.2	Stairs/Elevators		
☒ 1.4.2	Stressed Members	☒ 2.4.3	Ladders/Fixed Ladders		
☒ 1.4.3	Torqued Bolts	☒ 2.4.4	Cherry-Pickers/Hysters		
☒ 1.4.4	Gaskets/Seals/O 'Rings	☒ 2.4.5	Scaffolding/Scissor Jack Scaffolds		

Table A-2. Hazards Analysis

Item	Hazard/Event Summary			Preventive and Mitigative Features		Event Rank				Unmitigated Risk Bin Values (CW/MOI) and Selection for Additional Analysis	Event Rank				Comments
	Hazard Condition	Contributing Events	Nature of Release	SSCs	Admin	Freq	Unmitigated Consequences				Freq	Mitigated Consequences			
							CW	MOI	FW			CW	MOI	FW	
1	Failure of the 202A Building structure and Storage Tunnel structures	Seismic event, ash or snow load, high wind	Some portion of the facility radiological inventory released to the environment and/or exposure to personnel/receptors.	202A Building structure, Storage Tunnel structures	SAC D.5.2 Material Management Radioactive and Hazardous Waste Management Emergency Preparedness Program	U	M	L	H	Risk Bin I[b]/III This is the bounding seismic event since it involves the entire 202A Facility and the Storage Tunnel 2 inventory.	U	L	L	L	Building structures provide no credited mitigation for FW, CW, or MOI. Storage Tunnels are isolated with no access. While seismic events are anticipated in general industry, total failure and release of radiological inventory of PUREX structures could present high dose consequences to the FW. No additional controls beyond the Material Management SAC and SMPs are identified.
	Partial failure of building structure	Seismic event, ash or snow load, high wind	Some portion of the facility radiological inventory released to the environment and/or exposure to personnel/receptors.	202A Building structure	SAC D.5.2 Material Management Radioactive and Hazardous Waste Management Emergency Preparedness Program	U	M	L	L	Risk Bin II/III This event is the lower energy seismic event which results in partial failure of building (ECMP and impacts Cells A, B, and C).	U	L	L	L	Building structure provides no credited mitigation for FW, CW, or MOI. High doses to the FW are not anticipated. No additional controls beyond SMPs are required.
2	Isolated to complete failure of a structure, or a portion of it	Vehicle impact, crane drop	Some portion of the facility radiological inventory released to the environment and/or exposure to personnel/receptors The accident analysis for this event was revised in 2016 to use the MAR from N-Cell and the PR-Room; these locations and MAR are more conservative than the previously analyzed A, B, and C.	202A Building structure	Initial Testing, In-service Surveillance, and Maintenance Program Operational Safety Program (DOE/RL-92-36) Hazardous Material Protection Program Emergency Preparedness Program	A	M	L	L	Risk Bin I[b]/III The release is the same for this event as ID-1; however, the initiator is more frequent and very different. As a result, this is included as a separate event.	A	L	L	L	Building structure provides no credited mitigation for FW, CW, or MOI. Equipment drops are SIHs and this situation does not present high doses to the FW. As such, no additional controls beyond SMPs are required.

Table A-2. Hazards Analysis

Item	Hazard/Event Summary			Preventive and Mitigative Features		Event Rank				Unmitigated Risk Bin Values (CW/MOI) and Selection for Additional Analysis	Event Rank				Comments
	Hazard Condition	Contributing Events	Nature of Release	SSCs	Admin	Freq	Unmitigated Consequences				Freq	Mitigated Consequences			
							CW	MOI	FW			CW	MOI	FW	
3	Isolated failure, loss of confinement	Wear, aging, weather	Some portion of the facility radiological inventory released to the environment and/or exposure to personnel.	Building and Storage Tunnel structures	Initial Testing, in-service Surveillance and Maintenance Program	A	L	L	L	Risk Bin III/III	A	L	L	L	Degradation does not represent a scenario with sufficient energy to result in a significant release.
4	Localized Fire	Ignition from ongoing activities; range fire	Portion of the facility inventory is released due to localized fire. There is not sufficient energy to propagate to the entire building. It is assumed that N-Cell burns with an open path to the environment.	202A Building structure	SAC D.5.2 Material Management Operational Safety Program (Fire Protection Program) and HFD response Hazardous Material Protection Program Radiation Protection Program	U	L	L	M	Risk Bin II[b]/III This is the bounding fire for the 202A building and considers the N-Cell inventory.	U	L	L	L	Building structure provides no credited mitigation for FW, CW, or MOI. The concern to the FW is the fire which could cause serious injury or death; dose consequences to the FW are anticipated to be moderate. No additional controls beyond the Material Management SAC and SMPs are required.
5	Localized Fire	Ignition from ongoing activities; range fire	Portion of the facility inventory is released due to localized fire. There is not sufficient energy to propagate to the entire building. It is assumed that the labs burn in this event. Bounded by the N-Cell fire.	N/A	Operational Safety Program (Fire Protection Program) and HFD response Hazardous Material Protection Program Radiation Protection Program	U	L	L	M	Risk Bin III/III	U	L	L	L	The concern to the FW is the fire which could cause serious injury or death; dose consequences to the FW are anticipated to be moderate. No additional controls beyond SMPs are required.

Table A-2. Hazards Analysis

Item	Hazard/Event Summary			Preventive and Mitigative Features		Event Rank				Unmitigated Risk Bin Values (CW/MOI) and Selection for Additional Analysis	Event Rank				Comments
	Hazard Condition	Contributing Events	Nature of Release	SSCs	Admin	Freq	Unmitigated Consequences				Freq	Mitigated Consequences			
							CW	MOI	FW			CW	MOI	FW	
6	FW exposure radiation	Personnel error in surveying and/or posting of the radiation areas	N/A. This could result in an external exposure to personnel. The event could occur in any of the radiation areas within the facility.	N/A	Hazardous Material Protection Program Radiation Protection Program	A	L	L	L	Risk Bin III/III	A	L	L	L	Radiation exposure is a hazard covered by SMPs. Exposure of this type would not meet the criteria for additional controls.
7	FW exposure to toxic materials	FW enters area containing toxicological materials without the proper equipment. Personnel error, inadequate characterization.	N/A. This could result in either an external or internal exposure to personnel. The event could occur in any of the facility areas with toxicological residual materials.	N/A	Hazardous Material Protection Program	A	L	L	L	Risk Bin III/III	A	L	L	L	Toxic material exposure is a hazard covered by SMPs. Exposure of this type would not meet the criteria for additional controls.
8	Water intrusion/water or liquid spill	Water intrusion from natural sources (rain)	Some release of contaminated water to the environment	Confinement system	In-Service Surveillance and Maintenance Program Operational Safety Program	A	L	L	L	Risk Bin III/III	A	L	L	L	Risks to the FW are standard industrial hazards since the dominant hazard is water intrusion or water/liquid spill, which applies to industrial facilities. No controls beyond SMPs are required.
9	Criticality	Unauthorized movement of material	Release of fission product to environment/workers	N/A	Criticality Safety Program	N/A	N/A	N/A	N/A	N/A The facility is a limited control facility and criticality is not evaluated due to the conclusion that criticality is not credible for S&M (WHC-SD-SQA-CSA-511; CHPRC-03416).	N/A	L	N/A	N/A	Risk to the FW is not evaluated due to the conclusion that criticality is not credible for the S&M period based on form and/or distribution of materials. (WHC-SD-SQA-CSA-511; CHPRC-03416) TSR AC D.5.3

Table A-2. Hazards Analysis

Item	Hazard/Event Summary			Preventive and Mitigative Features		Event Rank				Unmitigated Risk Bin Values (CW/MOI) and Selection for Additional Analysis	Event Rank				Comments
	Hazard Condition	Contributing Events	Nature of Release	SSCs	Admin	Freq	Unmitigated Consequences				Freq	Mitigated Consequences			
							CW	MOI	FW			CW	MOI	FW	
10	Drop of equipment during removal, or waste container during handling	Personnel error; equipment failure	Portion of the contamination on the equipment being removed Addresses the potential for equipment removal and accidents related to that event.	N/A	Radiation Protection Program Hazardous Material Protection Program	A	M	L	L	Risk Bin III/III This event was evaluated separately to ensure that any different release mechanisms versus the seismic event are captured.	A	L	L	L	Material at risk does not provide significant dose to the FW and equipment drops are standard industrial hazards. No additional controls beyond the SMPs are required.
11	Fire impacting staged waste either internal or external to the facility	Personnel error, incompatible wastes, equipment events	Some portion of the contamination within the waste; equipment vehicular accidents.	N/A	SAC D.5.2 Material Management Operational Safety Program (Fire Protection Program) and HFD response Hazardous Material Protection Program Radiation Protection Program	A	M	L	L	Risk Bin II/III This event was evaluated separately to ensure that any different release mechanisms versus the other fire events are captured.	A	L	L	L	Material at risk does not provide significant dose to the FW; therefore, the risk to the FW is the fire which may cause serious injury or death. The risk is adequately protected by the Material Management SAC and SMPs.
12	Fire in Storage Tunnel 1	N/A	N/A	N/A	N/A	N/A	N/A	N/A	N/A	N/A	N/A	N/A	N/A	N/A	N/A
13	Crane or vehicle accident resulting in partial failure of the Storage Tunnel 1 structure	N/A	N/A	N/A	N/A	N/A	N/A	N/A	N/A	N/A	N/A	N/A	N/A	N/A	N/A

Table A-2. Hazards Analysis

Item	Hazard/Event Summary			Preventive and Mitigative Features		Event Rank				Unmitigated Risk Bin Values (CW/MOI) and Selection for Additional Analysis	Event Rank				Comments
	Hazard Condition	Contributing Events	Nature of Release	SSCs	Admin	Freq	Unmitigated Consequences				Freq	Mitigated Consequences			
							CW	MOI	FW			CW	MOI	FW	
14	Crane or vehicle accident resulting in either partial or total failure of the Storage Tunnel 2 structure	Crane use around the storage tunnel areas. If the structural integrity is compromised, the failure may self-propagate into a total failure.	Some portion of the storage tunnel material released due to crane or vehicle accident.	N/A	SAC D.5.2 Material Management Initial Testing, In-service Surveillance and Maintenance Program Operational Safety Program (DOE/RL-92-36) Hazardous Material Protection Program	A	L	L	H	Risk Bin III/III This event was evaluated to determine if Storage Tunnel 1 or 2 was the greater risk for this scenario.	A	L	L	L	Equipment drops are SIHs, however this situation may present high doses to the FW. No controls beyond the Material Management SAC and SMPs are identified for FW protection. Self-propagating (zippering) collapses are bounded by this event.
15	Loss of Ventilation or filtration	Equipment failure; loss of electrical power	Some portion of the 202A Building material released due to loss of ventilation or filtration	N/A	Initial Testing, In-service Surveillance and Maintenance Program Hazardous Material Protection Program	A	L	L	L	Risk Bin III/III	A	L	L	L	Material release from this mechanism would be minimal. Exposure of this type would not meet the criteria for additional controls.

Table A-2. Hazards Analysis

Item	Hazard/Event Summary			Preventive and Mitigative Features		Event Rank				Unmitigated Risk Bin Values (CW/MOI) and Selection for Additional Analysis	Event Rank				Comments
	Hazard Condition	Contributing Events	Nature of Release	SSCs	Admin	Freq	Unmitigated Consequences				Freq	Mitigated Consequences			
							CW	MOI	FW			CW	MOI	FW	
16	Structural failure of < HC 3 buildings	NPH, Crane Failure	No Significant Release	N/A	Initial Testing, In-service Surveillance and Maintenance Program Operational Safety Program, Operational Safety Program (DOE/RL-92-36) Hazardous Material Protection Program	A	L	L	L	Risk Bin III/III	A	L	L	L	Risk to the FW is a standard hazard since the dominant hazard is structural failure of the buildings, which applies to all facilities. No controls beyond SMPs are required.
17	Fire Involving: < HC 3 Buildings	Personnel error, mechanical failure	No significant release	N/A	Operational Safety Program (Fire Protection Program) and Fire Department response Hazardous Material Protection Program Radiation Protection Program	A	L	L	L	Risk Bin III/III	A	L	L	L	Risk to the FW is a standard hazard since the dominant hazard is a fire that does not involve significant MAR. No controls beyond SMPs are required.
18	Crane or vehicle accident impacting deep-bed filters	Crane and vehicle use around deep-bed filters	Some portion of deep-bed filter material	Filter Structures	Operational Safety Program (DOE/RL-92-36) Hazardous Material Protection Program	A	L	L	L	Risk Bin III/III	A	L	L	L	Risk to the FW is a standard hazard since the dominant hazard is crane or vehicle impact, which applies to all facilities. No controls beyond SMPs are required. Bounds age related structural failure.

Table A-2. Hazards Analysis

Item	Hazard/Event Summary			Preventive and Mitigative Features		Event Rank				Unmitigated Risk Bin Values (CW/MOI) and Selection for Additional Analysis	Event Rank				Comments
	Hazard Condition	Contributing Events	Nature of Release	SSCs	Admin	Freq	Unmitigated Consequences				Freq	Mitigated Consequences			
							CW	MOI	FW			CW	MOI	FW	
19	Hydrogen explosion	Vent Failure	Inventory and shrapnel explodes from a tank	Configuration of tanks and lack of energy sources in the canyon	Hazardous Material Protection Program USQ Process	EU	L	L	H	Risk Bin IV/IV	EU	L	L	L	The DSA prohibits cutting into or otherwise accessing pipes, tanks, or other spaces with the potential to contain explosive gas: the USQ process and the Hazardous Material Protection Program (which executes the Job Hazards Analysis process) protect against this event.
20	Spray Release	Personnel error, mechanical failure	While pumping liquids from Tank V11-10-1 or 216-A-TK2 for maintenance, material is released in spray	N/A	Initial Testing, In-service Surveillance and Maintenance Program Hazardous Material Protection Program	A	L	L	L	Risk Bin III/III	A	L	L	L	Risk to FW is minimal since Section 2.2 of this DSA only allows pumping of Tank V-11-10-1 and 216-A-TK2, which contain liquids with insignificant quantities of radionuclides.
21	Partial failure of the 202A Building structure with fire	Aircraft Impact	Some portion of the facility radiological inventory released to the environment and/or exposure to personnel/receptors	N/A	SAC D.5.2 Material Management Emergency Preparedness Program	EU	M	M	H	Risk Bin III/III	EU	L	L	L	Building structure provides no credited mitigation for FW, CW, or MOI. Fire and dose present high consequences to the FW. No additional controls beyond the SAC D.5.2 Material Management SAC and SMPs are identified.
22	Partial Failure of Storage Tunnel 2 with fire	Aircraft Impact	Some portion of the facility radiological inventory is released to the environment and/or exposure to personnel receptors	Storage Tunnel Soil Overburden (SS DF)	SAC D.5.2 Material Management Emergency Preparedness Program	BEU	M	M	H	Risk Bin IV/IV	BEU	L	L	L	Tunnel Structure provides no credited mitigation for FW, CW, or MOI. Personnel cannot access tunnels, and therefore the fire is not the hazard of concern to the FW. Risk to the FW is considered high due to potential radiological exposure. This risk is adequately protected by the Material Management SAC and SMPS.

Table A-2. Hazards Analysis

Item	Hazard/Event Summary			Preventive and Mitigative Features		Event Rank				Unmitigated Risk Bin Values (CW/MOI) and Selection for Additional Analysis	Event Rank				Comments
	Hazard Condition	Contributing Events	Nature of Release	SSCs	Admin	Freq	Unmitigated Consequences				Freq	Mitigated Consequences			
							CW	MOI	FW			CW	MOI	FW	
23	Hydrogen explosion in Storage Tunnel 2	Radiolytic hydrogen production in stored 324 hot cell waste	Hydrogen concentration above LFL within storage container, explosion breaches containers, box, and tunnel, causing release	Storage Tunnel Soil Overburden (SS DF)	Operational Safety Program (DOE/RL-92-36)	BEU	M	M	L	Risk Bin III/III	BEU	L	L	L	Initial radiolytic hydrogen production from water and organic materials in waste plus concrete of burial box calculated at < 120 L/day in 1995. Waste containers, storage liner, and concrete burial box are all equipped with HEPA-Filtered vents, allowing evolved hydrogen to enter the tunnel airspace. No utilities, access, or other ignition sources are possible within the tunnel. After 22 yr in place in Storage Tunnel 2, there should be no remaining significant radiolytic hydrogen production.

Notes:
[a] It is noted that the Accident Analysis determined 'Moderate' CW consequences
[b] It is noted that the Accident Analysis determined 'Low' CW consequences
DOE/RL-92-36, *Hanford Site Hoisting and Rigging Manual*
WHC-SD-SQA-CSA-511, CSER 96-012, *Facility Reclassification and Criticality Alarm System Shutoff for Deactivated PUREX*
CHPRC-03416, *CSER 17-002: Grouting PUREX Tunnels*

A	=	anticipated	MOI	=	maximally-exposed offsite individual
BEU	=	beyond extremely unlikely	N/A	=	not applicable
CW	=	collocated worker	PPE	=	personal protection equipment
DR	=	damage ratio	S&M	=	surveillance and maintenance
ECMP	=	east crane maintenance platform	SMP	=	safety management program
EU	=	extremely unlikely	SSC	=	structure, system, and component
FW	=	facility worker	TSR	=	technical safety requirement
L	=	low	U	=	unlikely
M	=	moderate			

A.2 Hazard ID Discussions

(Note that the following numbers match the ID numbers in Table A-2 above)

1. The event considered here is the catastrophic failure of the 202A Building Structure and Storage Tunnel 2: due to natural phenomena events such as seismic activity, ash/snow loading, or high winds.
2. The event considered here is the failure of a portion of the building structure as a result of vehicle impact or drop of a crane load onto the facility.
3. The event considered here is the failure of a portion of the building structure as a result of facility degradation over the extended surveillance and maintenance period. This is considered a low-energy event with minimal material release.
4. The event evaluated here is a localized fire within N-Cell.
5. The event considered here is a localized fire with the labs. The combustible loading is considered to be insufficient to propagate to the entire facility.
6. This event considers the potential for personnel working within the facility to be exposed to radiation hazards.
7. This event considers the potential for FWs to be exposed to toxic material residuals during activities.
8. The event considered here is a water spill within the facility during performance of surveillance and maintenance activities. The water is released in a contaminated area and contaminated water is released to the environment outside the facility.
9. The event considered here is criticality. Since the facility is a limited control facility, criticality is determined to be incredible due to the physical form and distribution of the fissionable material and controls that are required to protect the declaration of incredibility.
10. The event considered here is the removal of contaminated equipment or waste and the equipment is dropped resulting in a release to the environment.
11. The event considered here is a fire involving the staged waste, either within the facility or external to the facility.
12. The event is N/A, as Storage Tunnel 1 has been stabilized and is no longer liable to accident releases.
13. The event is N/A, as Storage Tunnel 1 has been stabilized and is no longer liable to accident releases.
14. The event considered here is a crane or vehicle incident resulting in a partial or total collapse of Storage Tunnel 2.
15. The event considered here is an unfiltered ground-level release of material. This conservatively bounds a loss of filtration and loss of ventilation resulting in an over filtered release from passive building air exchange.

16. The event considered here is the structural failure of the LTHC3 buildings.
17. The event considered here is the fire involving the LTHC3 buildings.
18. The event considered here is a crane or vehicle accident impacting the deep-bed filters.
19. Hydrogen accumulation within a facility vessel is considered in this event.
20. The event considered here is a spray release while pumping fluids from Tank V-11-10-1 or 216-A-TK2.
21. The event considered here is the release of radiological material due to an aircraft impact into the 202A Building. A separate frequency analysis, CP-59723 Rev. 0, 2016, *Assessment of Aircraft Impact on CPS&M Nuclear Facilities in the 200 East and West Areas,* and determined that the assignment of an "EU" frequency was appropriate.
22. The event considered here is the release of radiological material from an aircraft impact into Storage Tunnel 2.
23. The event here is entered to cover the potential for an explosion from hydrogen generated by the 324 Building hot cell waste.

Table A-3. Disposition of Energy Checklist Items

Hazards Checklist Item	Evaluation	SMP Disposition
LOTE 1, 1.2	Liquid Nitrogen in Dewars was identified as a possible hazard associated with NDA activities	Management, Organization, and Institutional Safety Provisions
LOTE 2, 2.1	Loss of HVAC – system impacts were considered	Initial Testing, In-Service Surveillance and Maintenance; PHA ID 16
LOTE 2.2	Loss of HVAC – worker impacts are limited to working in high temperatures	Management, Organization, and Institutional Safety Provisions
AE (ALL)	Areas with operating equipment have acoustic energy considerations	Management, Organization, and Institutional Safety Provisions
BIO (ALL)	Biological hazards are an expected hazard, especially in non-occupied facilities in long term surveillance and maintenance	Management, Organization, and Institutional Safety Provisions
NPH 1, 12, 13, 16	Various NPHs that could result in failure of the building structure and loss of confinement	Initial Testing, In-Service Surveillance and Maintenance; PHA IDS 1, 2
NPH 2, 3, 4, 5	Various NPHs that could result in a building fire	Operational Safety; PHA IDS 5, 6
NPH 6, 7	Various NPHs that could contribute to a vehicle impact that could result in partial failure of the building structure	Initial Testing, In-Service Surveillance and Maintenance; Operational Safety PHA IDS 3, 14
NPH 8, 8.1, 9	NPH considerations for water intrusion	Initial Testing, In-Service Surveillance and Maintenance PHA ID 9
NPH 10, 11	NPH considerations for low/freezing temperatures	Initial Testing, In-Service Surveillance and Maintenance; Management, Organization, and Institutional Safety Provisions
OTH 1 (All)	Potential confined space (low oxygen) hazards identified at the facility	Management, Organization, and Institutional Safety Provisions
OTH 2 (All)	Potential visibility hazards identified at the facility	Management, Organization, and Institutional Safety Provisions

Table A-3. Disposition of Energy Checklist Items

Hazards Checklist Item	Evaluation	SMP Disposition
OTH 3, 3.1	External event of an aircraft impact to the facility	Emergency Preparedness; PHA IDs 22, 23
OTH 3.4	External event of a major fire impacting the facility	Operational Safety; PHA IDs 5, 6, 12, 13, 18, 22, 23
OTH 4, 5	These items were checked by the HA team in recognition that the characterization information at the facility is not current and may be subject to change	The hazard is dispositioned by use of conservative assumptions in modeling the accidents and by the identification of characterization activities as a primary authorized activity
KE 1 (All)	Vehicles in motion are an expected hazard for facilities in long-term S&M	Operational Safety; Management, Organization, and Institutional Safety Provisions PHA IDs 3, 14, 15, 17, 19
KE 2 (All)	Vehicles in motion with loads	Operational Safety; Management, Organization, and Institutional Safety Provisions PHA IDs 3, 11, 14, 15, 17, 19
KE 3 (All)	The tools are identified for use in decontamination and/or size reductions that may be performed under long-term S&M	Management, Organization, and Institutional Safety Provisions
KE 4	There are relief valves in PUREX	Management, Organization, and Institutional Safety Provisions
LOEE 1 TO 1.4 (All)	These items identify the potential hazards associated with a loss of the ventilation system	Initial Testing, In-Surveillance and Maintenance, Management, Organization, and Industrial Safety Provisions; PHA ID 16
LOEE 1.6, 1.7 (All)	Hazards associated with the loss of electrical power resulting in a lack of climate control for the workers	Management, Organization, and Institutional Safety Provisions
LOEE 1.9	Loss of electrical power leading to a loss of instruments at the facility	The HA team identified the loss of instrumentation within the facility but no impacts beyond failure of the instrument were identified
LOEE 2, 3, and 4 (All)	Loss of electrical power including loss of portable equipment being used and worker lighting	Management, Organization, and Industrial Safety Provisions; PHA ID 16

Table A-3. Disposition of Energy Checklist Items

Hazards Checklist Item	Evaluation	SMP Disposition
CM (All)	From the facility history and conditions as well as past S&M activities performed by the HA team members these are the types of residual chemical materials that are expected within the facility. This addresses the potential for personnel exposure to the materials	Management, Organization, and Industrial Safety Provisions; PHA ID 8
CE (All)	From the facility history and conditions as well as past S&M activities performed by the HA team members these are the types of chemical energies that are expected within the facility	Radioactive and Hazardous Waste Management; Operational Safety Management; Management, Organization, and Industrial Safety Provisions; PHA ID 8
ME (All)	Mechanical energy hazards associated with the current operating systems as well as the equipment associated with planned or authorized activities	Radiation Protection; Hazardous Material Protection; Management, Organization, and Institutional Safety Provisions; PHA IDs 3, 11, 14, 15, 17, 19
TP (All)	Thermal potential energy hazards associated with the current facility conditions and equipment as well as those associated with planned or authorized activities	Operational Safety; Management, Organization, and Institutional Safety Provisions PHA IDs 5, 6, 12
EE (All)	Electrical energy hazards associated with the current operating systems as well as the equipment associated with planned or authorized activities	Operational Safety; Management, Organization, and Institutional Safety Provisions PHA IDs 16
Re 1 (All)	Radiant energies associated with residual inventory and authorized activities	Radiation protection PHA IDs 7, 10
Re 3 (All)	Radiant energies associated with cutting and welding activities	Operational Safety; Management, Organization, and Institutional Safety Provisions PHA IDs 5, 6
RE 4 (All)	Radiant energies associated with residual inventory and authorized activities	Prevention of Inadvertent Criticality; PHA IDs 7, 10
RM 1 (All)	Radioactive material associated with the residual inventory and the authorized activities	Prevention of Inadvertent Criticality; Radiation Protection; PHA IDs 7, 10
RM 2.3	Radioactive material associated with residual inventory in piping	Radiation Protection; Management, Organization, and Institutional Safety Provisions; PHA IDs 7, 8
RM 3 (All)	Radioactive material associated with the residual inventory and the authorized activities as waste components	Radiation Protection; Radioactive and Hazardous Waste Management; Operational Safety; Management, Organization, and Institutional Safety Provisions; PHA IDs 8, 11, 12, 19

Table A-3. Disposition of Energy Checklist Items

Hazards Checklist Item	Evaluation	SMP Disposition
RM 4 (All)	Contaminated radioactive materials	Radiation Protection; Management, Organization, and Institutional Safety Provisions; PHA IDs 7, 8, 19
TE 3, 4, 5, 6, 7 (All)	Thermal energy hazards associated with the inventory, authorized activities and systems. Sources considered hot enough to result in ignition	Operational Safety; Management, Organization, and Institutional Safety Provisions PHA IDs 5, 6
TE 8 (All)	Thermal energy hazards to the worker related to loss of ventilation and PPE	Management, Organization, and Institutional Safety Provisions
PE 1 (All)	Pressurized systems potential energy hazards	Management, Organization, and Institutional Safety Provisions; PHA IDs 20, 21
PE 2.1 (except 2.1.1), 2.3, 2.4 (All)	Potential energy hazards associated with elevated working surfaces	Management, Organization, and Institutional Safety Provisions
PE 2.1.1, 2.2	Potential energy hazards associated with crane work	Radiation Protection; Initial Testing, In-Service Surveillance and Maintenance; Operational Safety; Management, Organization, and Institutional Safety Provisions; PHA IDs 3, 11, 14, 15, 17, 19
PE 3 (All)	Rotating devices potential energy associated with current systems or possible equipment	Initial Testing, In-Service Surveillance and Maintenance; Operational Safety; Management, Organization, and Institutional Safety Provisions

Notes:

DOE/RL-92-36, *Hanford Site Hoisting and Rigging Manual*

AE	=	acoustic energy	BIO	=	biological
CE	=	chemical energy	CM	=	Chemical material
EE	=	electrical energy	HA	=	hazard analysis
HVAC	=	heating, ventilation, and air conditioning	IS	=	industrial safety
IH	=	industrial hygiene	KE	=	kinetic energy
LOEE	=	loss of electrical energy	LOTE	=	low thermal energy
ME	=	mechanical energy	NDA	=	nondestructive assay
NPH	=	natural phenomena hazard	OTH	=	other
PE	=	potential energy	PHA	=	preliminary hazards analysis
PPE	=	personal protective equipment	RE	=	radiant energy
RM	=	radioactive material	TE	=	thermal energy
TP	=	thermal potential energy			

Table A-4 Binning of Accidents

Accident ID	Representative & Bounding Event	Basis	Consequence Analysis in DSA	Selected Control(s)
Impact/Seismic				
1	PUREX Facility and Storage Tunnel 2 Seismic/NPH Event	This is the bounding seismic event, since it involves the entire PUREX Facility inventory	3.4.7	TSR AC D.5.1 TSR SAC D.5.2 SS DF
	Seismic/NPH Event	This event is the lower-energy seismic event impacting the ECMP	Not Analyzed	N/A
2	202A Building Crane Drop Event	The release is the same for this event as ID-1; however, the initiator is more frequent and very difficult. As a result, this is included as a separate event	3.4.1	TSR AC D.5.1 TSR SAC D.5.2
	Crane Drop and/or Seismic Event (ID-2 or ID-1)	The release is bounded by either ID 1 or 2 events since this is a lower energy event.	Not Analyzed	N/A
10	Drop of equipment/waste during handling	This event was evaluated separately to ensure that any different release mechanisms versus the seismic event are captured	3.4.4	TSR AC D.5.1 TSR SAC D.5.2
13	Partial Failure of Storage Tunnel 1	Storage Tunnel 1 is stabilized, this is no longer a possible accident	N/A	N/A
14	Storage Tunnel 2 Crane Drop Event	This event bounds tunnel impact events as it now assumes a complete catastrophic failure due to self-propagation/zippering. Bounds all collapses from age related degradation	3.4.2	TSR AC D.5.1 TSR SAC D.5.2
16	Structural failure of < HC 3 buildings	This event addresses the structural failure of < HC 3 support buildings	Not Analyzed	N/A
19	Crane drop on deep-bed filters	Bounded by ID-3	Not Analyzed	N/A
22	Aircraft Impact to the 202A Building	This event considers the failure of the 202A Building structure due to aircraft impact. This event is bounded by PHA ID1	3.4.3	N/A
23	Aircraft Impact to Storage Tunnel 2	This event considers a radiological release due to an aircraft impact to Storage Tunnel 2	Not Analyzed	N/A
Fires				
4	Localized Fire in N-Cell	This is the bounding fire for the 202A Building and considers the N-Cell Inventory	3.4.6	TSR AC D.5.1 TSR SAC D.5.2
5	Localized fire in the Labs	This event is bounded by PHA ID 4	Not Analyzed	N/A
11	Fire of Staged Waste	This event was evaluated separately to ensure that any different release mechanisms versus the other fire events are captured	3.4.5	TSR AC D.5.1 TSR SAC D.5.2

Table A-4 Binning of Accidents

Accident ID	Representative & Bounding Event	Basis	Consequence Analysis in DSA	Selected Control(s)
22	Fire in Storage Tunnel 2	This event was determined to not be a credible event, which agrees with the FHA	Not Analyzed	N/A
17	Fire of <HC 3 buildings	This event addresses fire impacting the <HC 3 support buildings	Not Analyzed	N/A
19	Hydrogen accumulation in the facility vessel	This was a low risk event in the HA and was not selected for additional analysis	Not Analyzed	N/A
Miscellaneous				
6	Facility Worker exposure to radiation	This is a worker level hazard. The energy is not sufficient to result in a release to the environment. As a personnel receptor event, it is used to evaluate controls/programs to ensure the safety of the worker	Not Analyzed	N/A
7	Facility Worker exposure to toxic materials	This is a worker level hazard. The energy is not sufficient to result in a release to the environment. As a personnel receptor event, it is used to evaluate controls/programs to ensure the safety of the worker	Not Analyzed	N/A
8	Water intrusion/spill	This is a low energy event. The potential release to the environment is bounded by the fire events. No analysis of the water event is performed	Not Analyzed	N/A
9	Criticality	This event is too low a probability to evaluate	Not Analyzed	TSR AC D.5.3
16	Loss of ventilation	This was a low risk event in the HA and was not selected for additional analysis	Not Analyzed	N/A
20	Spray release	This is a worker level hazard. The energy is not sufficient to result in a release to the environment	Not Analyzed	N/A

AC = administrative control
HA = hazard analysis
ID = identification
N/A = not applicable

A.3 References

CHPRC-03416, 2018, *CSER 17-002: Grouting PUREX Tunnels*, Rev 1, CH2M HILL Plateau Remediation Company, Richland, Washington.

CP-41822, 2018, *Fire Hazard Analysis for Plutonium-Uranium Extraction Plant*, Rev. 5, CH2M HILL Plateau Remediation Company, Richland, Washington.

CP-59723 Rev. 0, 2016, *Assessment of Aircraft Impact on CPS&M Nuclear Facilities in the 200 East and West Areas*.

HNF-SD-CP-HIE-004, 1999, *PUREX Deactivated End-State Hazard Analysis*, Rev. 0, B&W Hanford Company, Richland, Washington.

HNF-SD-CP-ISB-004, 1999, *Plutonium Uranium Extraction (PUREX) End State Basis for Interim Operation (BIO) for Surveillance and Maintenance*, Rev. 0, B&W Hanford Company, Richland, Washington.

DOE-STD-3009-2014, *Preparation of Nonreactor Nuclear Facility Documented Safety Analysis*

DOE-STD-3014-2006, 2006, *Accident Analysis for Aircraft Crash into Hazardous Facilities*, U.S. Department of Energy, Washington, D.C.

DOE/RL-92-36, *Hanford Site Hoisting and Rigging Manual*, as amended, U.S. Department of Energy, Richland, Washington.

WHC-SD-SQA-CSA-511, 2014, *CSER 96-012, Facility Reclassification and Criticality Alarm System Shutoff for Deactivated PUREX*, Rev. 1, CH2M HILL Plateau Remediation Company, Richland, Washington.

Appendix B

RADIDOSE Calculations

Figures

Figure B-1 (SP-1) 202A Crane Drop B-4
Figure B-2 (SP-2) Tunnel Crane Drop B-5
Figure B-3 (EE-1) 202A Aircraft Impact – Mechanical Impact B-6
Figure B-4 (EE-1) 202A Aircraft Impact – Burning Debris and Minor Waste B-7
Figure B-5 (EE-1) 202A Aircraft Impact – Noncombustible Contaminated Equipment..... B-8
Figure B-6 (SP-3) Waste Container Drop B-9
Figure B-7 (FIR-1) Staged Waste Fire B-10
Figure B-8 (FIR-2) N-Cell Fire – Glovebox Windows B-11
Figure B-9 (FIR-2) N-Cell Fire – Contaminated Process Equipment B-12
Figure B-10 (NPH-1) Seismic Event – 202A and Deep Bed Filters B-13
Figure B-11 (NPH-1) Seismic Event – Tunnel 2 (No 324 Waste)..... B-14
Figure B-12 (NPH-1) Seismic Event – Tunnel 2 324 Waste (No Glass) B-15

Appendix B
RADIDOSE Calculations

RADIDOSE Version 3.0 (5-18-2005)

Input Parameter	User Input	Default	Description (based on user input)
Facility/Material (1-14):	13		User-defined mixture ("InSource" page)
Form of Material (1-10):	7		Pu Oxide and Other Powders
Accident Type (1-6):	2		External Impact
Quantity at Risk (MAR):	4.62E+03		g
Damage Ratio:		1	
Airborne Release Fraction:	1.00E-03		ARF
Respirable Fraction:	1.00E-01		RF
Leak Path Factor:		1	LPF (applies to particulate only)
HEPA Filter Factor:	1		DF = 1 (applies to particulate only)
Collocated Worker Dose Factor:		3	ICRP 68, 5 µm AMAD
Onsite & Offsite Public Dose Factor:		7	ICRP 72 for Adult
Material Solubility Class:		2	compounds are generally soluble
Hanford Processing Area (1-4):		2	200 Area
Distance or X/Q for Collocated Worker:	3.50E-03	at 369 m	s/m3
Distance or X/Q for Onsite Public:	8,550		meters
Distance or X/Q for Offsite Public:	15,209		meters
Emission Source Type (1-4):		1	Point source at ground level
Release Duration (0 to 8760 h):		0.5	hours

Description of Accident Scenario: Edit using function key F2. Carriage returns are not allowed.

Section 3.4.1: (SP-1) 202A Crane Drop
MAR = 4,619 grams (January 2018)
DR and LPF = 1.0 (DOE-STD-3009-14; 3.2.4.1)
ARF x RF = 1.0E-03 x 1.0E-01 (DOE-HDBK-3010-94; 4.4.3.3.2)
X/Q' = 3.50E-03 (DOE-STD-3009-14; 3.2.4.2)

Dose Results for the Postulated Accident:

User-defined mixture ("InSource" page)
Pu Oxide and Other Powders
Point Source At Ground Level **200 Area**
Total Respirable Release: 4.62E-01 g

Dose Factors:	ICRP 68, 5µm	ICRP 72 for Adult		Release
Receptor:	**Collocated Worker**	**Onsite Public**	**Offsite Public**	Duration 0.5 h
Distance:	369 m	8,550 m	15,209 m	
X/Q:	3.50E-03	3.06E-05	1.48E-05	s/m3
Breathing Rate:	3.35E-04	3.29E-04	3.29E-04	m3/s
Unit DCF:	2.01E+07	3.13E+07	3.13E+07	rem/g
Total Dose:	**1.09E+01**	**1.45E-01**	**7.01E-02**	**rem**
Consequence:	Low	na	Low	

Material source amounts are listed on the "UnitDF" page.

Nuclide	Grams per g	Specific Activity, Ci/g	Curies per g	FGR Index	4.137E-01 Fraction
Pu-238	6.31E-04	1.71E+01	1.08E-02	775	2.61E-02
Pu-239	8.36E-01	6.21E-02	5.19E-02	776	1.25E-01
Pu-240	1.33E-01	2.28E-01	3.02E-02	777	7.31E-02
Pu-241	2.27E-03	1.03E+02	2.34E-01	778	5.66E-01
Pu-242	2.76E-03	3.93E-03	1.08E-05	779	2.62E-05
Am-241	2.52E-02	3.43E+00	8.66E-02	788	2.09E-01
Sr-90	0.00E+00	1.37E+02	0.00E+00	164	0.00E+00
Cs-137	0.00E+00	8.70E+01	0.00E+00	371	0.00E+00

Figure B-1 (SP-1) 202A Crane Drop

RADIDOSE Version 3.0 (5-18-2005)

Input Parameter	User Input	Default	Description (based on user input)
Facility/Material (1-14):	13		User-defined mixture ("InSource" page)
Form of Material (1-10):	7		Pu Oxide and Other Powders
Accident Type (1-6):	2		External Impact
Quantity at Risk (MAR):	1.29E+03		g
Damage Ratio:		1	
Airborne Release Fraction:	1.00E-03		ARF
Respirable Fraction:	1.00E-01		RF
Leak Path Factor:		1	LPF (applies to particulate only)
HEPA Filter Factor:	1		DF = 1 (applies to particulate only)
Collocated Worker Dose Factor:		3	ICRP 68, 5 µm AMAD
Onsite & Offsite Public Dose Factor:		7	ICRP 72 for Adult
Material Solubility Class:	2		compounds are generally soluble
Hanford Processing Area (1-4):		2	200 Area
Distance or X/Q for Collocated Worker:	3.50E-03	at 369 m	s/m3
Distance or X/Q for Onsite Public:	8,550		meters
Distance or X/Q for Offsite Public:	15,209		meters
Emission Source Type (1-4):		1	Point source at ground level
Release Duration (0 to 8760 h):		0.5	hours

Description of Accident Scenario: Edit using function key F2. Carriage returns are not allowed.

Section 3.4.2: (SP-2) Tunnel 2 Crane Drop
MAR = 1,292 grams (January 2018)
DR and LPF = 1.0 (DOE-STD-3009-14; 3.2.4.1)
ARF x RF = 1.0E-03 x 1.0E-01 (DOE-HDBK-3010-94; 4.4.3.3.2)
X/Q' = 3.50E-03 (DOE-STD-3009-14; 3.2.4.2)

Dose Results for the Postulated Accident:

User-defined mixture ("InSource" page)
Pu Oxide and Other Powders
Point Source At Ground Level **200 Area**

Total Respirable Release: 1.29E-01 g

Dose Factors:	ICRP 68, 5µm	ICRP 72 for Adult		Release
Receptor:	**Collocated Worker**	**Onsite Public**	**Offsite Public**	Duration 0.5 h
Distance:	369 m	8,550 m	15,209 m	
X/Q:	3.50E-03	3.06E-05	1.48E-05	s/m3
Breathing Rate:	3.35E-04	3.29E-04	3.29E-04	m3/s
Unit DCF:	2.29E+07	3.54E+07	3.54E+07	rem/g
Total Dose:	**3.46E+00**	**4.59E-02**	**2.22E-02**	**rem**
Consequence:	Low	na	Low	

Material source amounts are listed on the "UnitDF" page.

Nuclide	Grams per g	Specific Activity, Ci/g	Curies per g	FGR Index	4.867E+00 Fraction
Pu-238	4.44E-03	1.71E+01	7.61E-02	775	1.56E-02
Pu-239	8.41E-01	6.21E-02	5.22E-02	776	1.07E-02
Pu-240	9.83E-02	2.28E-01	2.24E-02	777	4.60E-03
Pu-241	7.59E-03	1.03E+02	7.82E-01	778	1.61E-01
Pu-242	0.00E+00	3.93E-03	0.00E+00	779	0.00E+00
Am-241	1.07E-02	3.43E+00	3.66E-02	788	7.53E-03
Sr-90	1.27E-02	1.37E+02	1.73E+00	164	3.55E-01
Cs-137	2.50E-02	8.70E+01	2.17E+00	371	4.46E-01

Figure B-2 (SP-2) Tunnel Crane Drop

RADIDOSE Version 3.0 (5-18-2005)

Input Parameter	User Input	Default	Description (based on user input)
Facility/Material (1-14):	13		User-defined mixture ("InSource" page)
Form of Material (1-10):	4		Uncontaminated Contaminated Organic Solids
Accident Type (1-6):	1		Fire
Quantity at Risk (MAR):	8.50E+03		g
Damage Ratio:		1	
Airborne Release Fraction:	1.00E-03		ARF
Respirable Fraction:	1.00E-01		RF
Leak Path Factor:		1	LPF (applies to particulate only)
HEPA Filter Factor:	1		DF = 1 (applies to particulate only)
Collocated Worker Dose Factor:		3	ICRP 68, 5 µm AMAD
Onsite & Offsite Public Dose Factor:		7	ICRP 72 for Adult
Material Solubility Class:	2		compounds are generally soluble
Hanford Processing Area (1-4):		2	200 Area
Distance or X/Q for Collocated Worker:	3.50E-03	at 369 m	s/m3
Distance or X/Q for Onsite Public:	8,550		meters
Distance or X/Q for Offsite Public:	15,209		meters
Emission Source Type (1-4):	1		Point source at ground level
Release Duration (0 to 8760 h):		0.5	hours

Description of Accident Scenario: Edit using function key F2. Carriage returns are not allowed.

Section 3.4.3.a: (EE-1) 202A Aircraft Impact - Mechancial Impact
MAR = 8,500 grams; L-Cell, N-Cell, PR Room, and White Room (January 2018)
DR and LPF = 1.0 (DOE-STD-3009-14; 3.2.4.1)
ARF x RF = 1.0E-03 x 1.0E-01 (DOE-HDBK-3010-94; 4.4.3.3.2)
X/Q' = 3.50E-03 (DOE-STD-3009-14; 3.2.4.2)

Dose Results for the Postulated Accident:

User-defined mixture ("InSource" page)
Uncontaminated Contaminated Organic Solids
Point Source At Ground Level **200 Area**
Total Respirable Release: 8.50E-01 g

Dose Factors:	ICRP 68, 5µm	ICRP 72 for Adult		Release
Receptor:	**Collocated Worker**	**Onsite Public**	**Offsite Public**	Duration 0.5 h
Distance:	369 m	8,550 m	15,209 m	
X/Q:	3.50E-03	3.06E-05	1.48E-05	s/m3
Breathing Rate:	3.35E-04	3.29E-04	3.29E-04	m3/s
Unit DCF:	2.00E+07	3.12E+07	3.12E+07	rem/g
Total Dose:	**1.99E+01**	**2.66E-01**	**1.29E-01**	**rem**
Consequence:	Low	na	Low	

Material source amounts are listed on the "UnitDF" page.

Nuclide	Grams per g	Specific Activity, Ci/g	Curies per g	FGR Index	4.132E-01 Fraction
Pu-238	6.31E-04	1.71E+01	1.08E-02	775	2.61E-02
Pu-239	8.37E-01	6.21E-02	5.19E-02	776	1.26E-01
Pu-240	1.32E-01	2.28E-01	3.02E-02	777	7.30E-02
Pu-241	2.27E-03	1.03E+02	2.34E-01	778	5.67E-01
Pu-242	2.69E-03	3.93E-03	1.06E-05	779	2.56E-05
Am-241	2.50E-02	3.43E+00	8.60E-02	788	2.08E-01
Sr-90	0.00E+00	1.37E+02	0.00E+00	164	0.00E+00
Cs-137	0.00E+00	8.70E+01	0.00E+00	371	0.00E+00

Figure B-3 (EE-1) 202A Aircraft Impact – Mechanical Impact

RADIDOSE Version 3.0 (5-18-2005)

Input Parameter	User Input	Default	Description (based on user input)
Facility/Material (1-14):	13		User-defined mixture ("InSource" page)
Form of Material (1-10):	1		Packaged Waste (bags, drums, boxes)
Accident Type (1-6):	1		Fire
Quantity at Risk (MAR):	8.50E+02		g
Damage Ratio:		1	
Airborne Release Fraction:	5.00E-04		ARF
Respirable Fraction:	1.00E+00		RF
Leak Path Factor:		1	LPF (applies to particulate only)
HEPA Filter Factor:	1		DF = 1 (applies to particulate only)
Collocated Worker Dose Factor:		3	ICRP 68, 5 µm AMAD
Onsite & Offsite Public Dose Factor:		7	ICRP 72 for Adult
Material Solubility Class:	2		compounds are generally soluble
Hanford Processing Area (1-4):		2	200 Area
Distance or X/Q for Collocated Worker:	3.50E-03	at 369 m	s/m3
Distance or X/Q for Onsite Public:	8,550		meters
Distance or X/Q for Offsite Public:	15,209		meters
Emission Source Type (1-4):	1		Point source at ground level
Release Duration (0 to 8760 h):		0.5	hours

Description of Accident Scenario: Edit using function key F2. Carriage returns are not allowed.

Section 3.4.3.b: (EE-1) 202A Aircraft Impact - Burning Debris and Minor Waste
MAR = 850 grams; 10% of L-Cell, N-Cell, PR Room, and White Room (January 2018)
DR and LPF = 1.0 (DOE-STD-3009-14; 3.2.4.1)
ARF x RF = 5.0E-04 x 1.0 (DOE-HDBK-3010-94; 5.2.1.1)
X/Q' = 3.50E-03 (DOE-STD-3009-14; 3.2.4.2)

Dose Results for the Postulated Accident:

User-defined mixture ("InSource" page)
Packaged Waste (bags, drums, boxes)
Point Source At Ground Level **200 Area**
Total Respirable Release: 4.25E-01 g

Dose Factors:	ICRP 68, 5µm	ICRP 72 for Adult		Release
Receptor:	**Collocated Worker**	**Onsite Public**	**Offsite Public**	Duration 0.5 h
Distance:	369 m	8,550 m	15,209 m	
X/Q:	3.50E-03	3.06E-05	1.48E-05	s/m3
Breathing Rate:	3.35E-04	3.29E-04	3.29E-04	m3/s
Unit DCF:	2.00E+07	3.12E+07	3.12E+07	rem/g
Total Dose:	**9.97E+00**	**1.33E-01**	**6.43E-02**	**rem**
Consequence:	Low	na	Low	

Material source amounts are listed on the "UnitDF" page.

Nuclide	Grams per g	Specific Activity, Ci/g	Curies per g	FGR Index	4.132E-01 Fraction
Pu-238	6.31E-04	1.71E+01	1.08E-02	775	2.61E-02
Pu-239	8.37E-01	6.21E-02	5.19E-02	776	1.26E-01
Pu-240	1.32E-01	2.28E-01	3.02E-02	777	7.30E-02
Pu-241	2.27E-03	1.03E+02	2.34E-01	778	5.67E-01
Pu-242	2.69E-03	3.93E-03	1.06E-05	779	2.56E-05
Am-241	2.50E-02	3.43E+00	8.60E-02	788	2.08E-01
Sr-90	0.00E+00	1.37E+02	0.00E+00	164	0.00E+00
Cs-137	0.00E+00	8.70E+01	0.00E+00	371	0.00E+00

Figure B-3 (EE-1) 202A Aircraft Impact – Burning Debris and Minor Waste

RADIDOSE Version 3.0 (5-18-2005)

Input Parameter	User Input	Default	Description (based on user input)
Facility/Material (1-14):	13		User-defined mixture ("InSource" page)
Form of Material (1-10):	3		Non-combustible Contaminated Solids
Accident Type (1-6):	1		Fire
Quantity at Risk (MAR):	7.65E+03		g
Damage Ratio:		1	
Airborne Release Fraction:	6.00E-03		ARF
Respirable Fraction:	1.00E-02		RF
Leak Path Factor:		1	LPF (applies to particulate only)
HEPA Filter Factor:	1		DF = 1 (applies to particulate only)
Collocated Worker Dose Factor:		3	ICRP 68, 5 µm AMAD
Onsite & Offsite Public Dose Factor:		7	ICRP 72 for Adult
Material Solubility Class:	2		compounds are generally soluble
Hanford Processing Area (1-4):		2	200 Area
Distance or X/Q for Collocated Worker:	3.50E-03	at 369 m	s/m3
Distance or X/Q for Onsite Public:	8,550		meters
Distance or X/Q for Offsite Public:	15,209		meters
Emission Source Type (1-4):	1		Point source at ground level
Release Duration (0 to 8760 h):		0.5	hours

Description of Accident Scenario: Edit using function key F2. Carriage returns are not allowed.

Section 3.4.3.c: (EE-1) 202A Aircraft Impact - Nonflammable Components
MAR = 7,650 grams; 90% of L-Cell, N-Cell, PR Room, and White Room (January 2018)
DR and LPF = 1.0 (DOE-STD-3009-14; 3.2.4.1)
ARF x RF = 6.0E-03 x 1.0E-02 (DOE-HDBK-3010-94; 4.4.1.1)
X/Q' = 3.50E-03 (DOE-STD-3009-14; 3.2.4.2)

Dose Results for the Postulated Accident:

User-defined mixture ("InSource" page)
Non-combustible Contaminated Solids
Point Source At Ground Level **200 Area**
Total Respirable Release: 4.59E-01 g

Dose Factors:	ICRP 68, 5µm	ICRP 72 for Adult		Release Duration
Receptor:	**Collocated Worker**	**Onsite Public**	**Offsite Public**	0.5 h
Distance:	369 m	8,550 m	15,209 m	
X/Q:	3.50E-03	3.06E-05	1.48E-05	s/m3
Breathing Rate:	3.35E-04	3.29E-04	3.29E-04	m3/s
Unit DCF:	2.00E+07	3.12E+07	3.12E+07	rem/g
Total Dose:	**1.08E+01**	**1.44E-01**	**6.94E-02**	**rem**
Consequence:	Low	na	Low	

Material source amounts are listed on the "UnitDF" page.

Nuclide	Grams per g	Specific Activity, Ci/g	Curies per g	FGR Index	4.132E-01 Fraction
Pu-238	6.31E-04	1.71E+01	1.08E-02	775	2.61E-02
Pu-239	8.37E-01	6.21E-02	5.19E-02	776	1.26E-01
Pu-240	1.32E-01	2.28E-01	3.02E-02	777	7.30E-02
Pu-241	2.27E-03	1.03E+02	2.34E-01	778	5.67E-01
Pu-242	2.69E-03	3.93E-03	1.06E-05	779	2.56E-05
Am-241	2.50E-02	3.43E+00	8.60E-02	788	2.08E-01
Sr-90	0.00E+00	1.37E+02	0.00E+00	164	0.00E+00
Cs-137	0.00E+00	8.70E+01	0.00E+00	371	0.00E+00

Figure B-5 (EE-1) 202A Aircraft Impact – Noncombustible Contaminated Equipment

RADIDOSE Version 3.0 (5-18-2005)

Input Parameter	User Input	Default	Description (based on user input)
Facility/Material (1-14):	13		User-defined mixture ("InSource" page)
Form of Material (1-10):	1		Packaged Waste (bags, drums, boxes)
Accident Type (1-6):	2		External Impact
Quantity at Risk (MAR):	2.39E+02		g
Damage Ratio:		1	
Airborne Release Fraction:	1.00E-03		ARF
Respirable Fraction:	1.00E+00		RF
Leak Path Factor:		1	LPF (applies to particulate only)
HEPA Filter Factor:	1		DF = 1 (applies to particulate only)
Collocated Worker Dose Factor:		3	ICRP 68, 5 µm AMAD
Onsite & Offsite Public Dose Factor:		7	ICRP 72 for Adult
Material Solubility Class:		2	compounds are generally soluble
Hanford Processing Area (1-4):		2	200 Area
Distance or X/Q for Collocated Worker:	3.50E-03	at 369 m	s/m3
Distance or X/Q for Onsite Public:	8,550		meters
Distance or X/Q for Offsite Public:	15,209		meters
Emission Source Type (1-4):		1	Point source at ground level
Release Duration (0 to 8760 h):		0.5	hours

Description of Accident Scenario: Edit using function key F2. Carriage returns are not allowed.

Section 3.4.4: (SP-3) Waste Container Drop
MAR = 40 DE-Ci (239 g of 202A mixture; January 2018)
DR and LPF = 1.0 (DOE-STD-3009-14; 3.2.4.1)
ARF x RF = 1.0E-03 x 1.0 (DOE-HDBK-3010-94; 5.2.3.2)
X/Q' = 3.50E-03 (DOE-STD-3009-14; 3.2.4.2)

Dose Results for the Postulated Accident:

User-defined mixture ("InSource" page)
Packaged Waste (bags, drums, boxes)
Point Source At Ground Level **200 Area**
Total Respirable Release: 2.39E-01 g

Dose Factors:	ICRP 68, 5µm	ICRP 72 for Adult		Release
Receptor:	**Collocated Worker**	**Onsite Public**	**Offsite Public**	Duration 0.5 h
Distance:	369 m	8,550 m	15,209 m	
X/Q:	3.50E-03	3.06E-05	1.48E-05	s/m3
Breathing Rate:	3.35E-04	3.29E-04	3.29E-04	m3/s
Unit DCF:	1.99E+07	3.09E+07	3.09E+07	rem/g
Total Dose:	**5.57E+00**	**7.43E-02**	**3.59E-02**	**rem**
Consequence:	Low	na	Low	

Material source amounts are listed on the "UnitDF" page.

Nuclide	Grams per g	Specific Activity, Ci/g	Curies per g	FGR Index	1.344E+00 Fraction
Pu-238	6.29E-04	1.71E+01	1.08E-02	775	8.01E-03
Pu-239	8.30E-01	6.21E-02	5.15E-02	776	3.83E-02
Pu-240	1.30E-01	2.28E-01	2.96E-02	777	2.21E-02
Pu-241	2.26E-03	1.03E+02	2.33E-01	778	1.73E-01
Pu-242	2.69E-03	3.93E-03	1.06E-05	779	7.87E-06
Am-241	2.48E-02	3.43E+00	8.51E-02	788	6.33E-02
Sr-90	3.05E-03	1.37E+02	4.16E-01	164	3.09E-01
Cs-137	5.96E-03	8.70E+01	5.19E-01	371	3.86E-01

Figure B-6 (SP-3) Waste Container Drop

RADIDOSE Version 3.0 (5-18-2005)

Input Parameter	User Input	Default	Description (based on user input)
Facility/Material (1-14):	13		User-defined mixture ("InSource" page)
Form of Material (1-10):	1		Packaged Waste (bags, drums, boxes)
Accident Type (1-6):	1		Fire
Quantity at Risk (MAR):	2.39E+02		g
Damage Ratio:		1	
Airborne Release Fraction:	5.00E-04		ARF
Respirable Fraction:	1.00E+00		RF
Leak Path Factor:		1	LPF (applies to particulate only)
HEPA Filter Factor:	1		DF = 1 (applies to particulate only)
Collocated Worker Dose Factor:		3	ICRP 68, 5 µm AMAD
Onsite & Offsite Public Dose Factor:		7	ICRP 72 for Adult
Material Solubility Class:	2		compounds are generally soluble
Hanford Processing Area (1-4):		2	200 Area
Distance or X/Q for Collocated Worker:	3.50E-03	at 369 m	s/m3
Distance or X/Q for Onsite Public:	8,550		meters
Distance or X/Q for Offsite Public:	15,209		meters
Emission Source Type (1-4):	1		Point source at ground level
Release Duration (0 to 8760 h):		0.5	hours

Description of Accident Scenario: Edit using function key F2. Carriage returns are not allowed.

Section 3.4.5: (FIR-1) Staged Waste Fire
MAR = 40 DE-Ci (239 g of 202A mixture; January 2018)
DR and LPF = 1.0 (DOE-STD-3009-14; 3.2.4.1)
ARF x RF = 5.0E-04 x 1.0 (DOE-HDBK-3010-94; 5.2.1.1)
X/Q' = 3.50E-03 (DOE-STD-3009-14; 3.2.4.2)

Dose Results for the Postulated Accident:

User-defined mixture ("InSource" page)
Packaged Waste (bags, drums, boxes)
Point Source At Ground Level **200 Area**

Total Respirable Release: 1.20E-01 g

Dose Factors:	ICRP 68, 5µm	ICRP 72 for Adult		Release
Receptor:	**Collocated Worker**	**Onsite Public**	**Offsite Public**	Duration 0.5 h
Distance:	369 m	8,550 m	15,209 m	
X/Q:	3.50E-03	3.06E-05	1.48E-05	s/m3
Breathing Rate:	3.35E-04	3.29E-04	3.29E-04	m3/s
Unit DCF:	1.99E+07	3.09E+07	3.09E+07	rem/g
Total Dose:	**2.78E+00**	**3.72E-02**	**1.79E-02**	**rem**
Consequence:	Low	na	Low	

Material source amounts are listed on the "UnitDF" page.

Nuclide	Grams per g	Specific Activity, Ci/g	Curies per g	FGR Index	1.344E+00 Fraction
Pu-238	6.29E-04	1.71E+01	1.08E-02	775	8.01E-03
Pu-239	8.30E-01	6.21E-02	5.15E-02	776	3.83E-02
Pu-240	1.30E-01	2.28E-01	2.96E-02	777	2.21E-02
Pu-241	2.26E-03	1.03E+02	2.33E-01	778	1.73E-01
Pu-242	2.69E-03	3.93E-03	1.06E-05	779	7.87E-06
Am-241	2.48E-02	3.43E+00	8.51E-02	788	6.33E-02
Sr-90	3.05E-03	1.37E+02	4.16E-01	164	3.09E-01
Cs-137	5.96E-03	8.70E+01	5.19E-01	371	3.86E-01

Figure B-7 (FIR-1) Staged Waste Fire

RADIDOSE Version 3.0 (5-18-2005)

Input Parameter	User Input	Default	Description (based on user input)
Facility/Material (1-14):	13		User-defined mixture ("InSource" page)
Form of Material (1-10):	3		Non-combustible Contaminated Solids
Accident Type (1-6):	1		Fire
Quantity at Risk (MAR):	1.93E+02		g
Damage Ratio:		1	
Airborne Release Fraction:	6.00E-03		ARF
Respirable Fraction:	1		RF
Leak Path Factor:		1	LPF (applies to particulate only)
HEPA Filter Factor:	1		DF = 1 (applies to particulate only)
Collocated Worker Dose Factor:		3	ICRP 68, 5 µm AMAD
Onsite & Offsite Public Dose Factor:		7	ICRP 72 for Adult
Material Solubility Class:	2		compounds are generally soluble
Hanford Processing Area (1-4):		2	200 Area
Distance or X/Q for Collocated Worker:	3.50E-03	at 369 m	s/m3
Distance or X/Q for Onsite Public:	8,550		meters
Distance or X/Q for Offsite Public:	15,209		meters
Emission Source Type (1-4):	1		Point source at ground level
Release Duration (0 to 8760 h):		0.5	hours

Description of Accident Scenario: Edit using function key F2. Carriage returns are not allowed.

Section 3.4.6.a: (FIR-2) N-Cell Glovebox Fire Component
MAR = 193 grams; 10% of N-Cell (January 2018)
DR and LPF = 1.0 (DOE-STD-3009-14; 3.2.4.1)
ARF x RF = 6.0E-03 x 1.0 (CHPRC-02287)
X/Q' = 3.50E-03 (DOE-STD-3009-14; 3.2.4.2)

Dose Results for the Postulated Accident:

User-defined mixture ("InSource" page)
Non-combustible Contaminated Solids
Point Source At Ground Level **200 Area**

Total Respirable Release: 1.16E+00 g

Dose Factors:	ICRP 68, 5µm	ICRP 72 for Adult		Release
Receptor:	**Collocated Worker**	**Onsite Public**	**Offsite Public**	Duration 0.5 h
Distance:	369 m	8,550 m	15,209 m	
X/Q:	3.50E-03	3.06E-05	1.48E-05	s/m3
Breathing Rate:	3.35E-04	3.29E-04	3.29E-04	m3/s
Unit DCF:	2.00E+07	3.12E+07	3.12E+07	rem/g
Total Dose:	**2.72E+01**	**3.63E-01**	**1.75E-01**	**rem**
Consequence:	Moderate	na	Low	

Material source amounts are listed on the "UnitDF" page.

Nuclide	Grams per g	Specific Activity, Ci/g	Curies per g	FGR Index	4.160E-01 Fraction
Pu-238	6.48E-04	1.71E+01	1.11E-02	775	2.67E-02
Pu-239	8.36E-01	6.21E-02	5.19E-02	776	1.25E-01
Pu-240	1.34E-01	2.28E-01	3.05E-02	777	7.34E-02
Pu-241	2.30E-03	1.03E+02	2.37E-01	778	5.71E-01
Pu-242	2.64E-03	3.93E-03	1.04E-05	779	2.50E-05
Am-241	2.48E-02	3.43E+00	8.51E-02	788	2.05E-01
Sr-90	0.00E+00	1.37E+02	0.00E+00	164	0.00E+00
Cs-137	0.00E+00	8.70E+01	0.00E+00	371	0.00E+00

Figure B-8 (FIR-2) N-Cell Fire – Glovebox Windows

RADIDOSE Version 3.0 (5-18-2005)

Input Parameter	User Input	Default	Description (based on user input)
Facility/Material (1-14):	13		User-defined mixture ("InSource" page)
Form of Material (1-10):	3		Non-combustible Contaminated Solids
Accident Type (1-6):	1		Fire
Quantity at Risk (MAR):	1.73E+03		g
Damage Ratio:		1	
Airborne Release Fraction:	6.00E-03		ARF
Respirable Fraction:	1.00E-02		RF
Leak Path Factor:		1	LPF (applies to particulate only)
HEPA Filter Factor:	1		DF = 1 (applies to particulate only)
Collocated Worker Dose Factor:		3	ICRP 68, 5 µm AMAD
Onsite & Offsite Public Dose Factor:		7	ICRP 72 for Adult
Material Solubility Class:	2		compounds are generally soluble
Hanford Processing Area (1-4):		2	200 Area
Distance or X/Q for Collocated Worker:	3.50E-03	at 369 m	s/m3
Distance or X/Q for Onsite Public:	8,550		meters
Distance or X/Q for Offsite Public:	15,209		meters
Emission Source Type (1-4):	1		Point source at ground level
Release Duration (0 to 8760 h):		0.5	hours

Description of Accident Scenario: Edit using function key F2. Carriage returns are not allowed.

Section 3.4.6.b: (FIR-2) N-Cell Fire Noncombustible Component
MAR = 1,734 grams; 90% of N Cell (January 2018)
DR and LPF = 1.0 (DOE-STD-3009-14; 3.2.4.1)
ARF x RF = 6.0E-03 x 1.0E-02 (DOE-HDBK-3010-94; 4.4.1.1)
X/Q' = 3.50E-03 (DOE-STD-3009-14; 3.2.4.2)

Dose Results for the Postulated Accident:

User-defined mixture ("InSource" page)
Non-combustible Contaminated Solids
Point Source At Ground Level **200 Area**
Total Respirable Release: 1.04E-01 g

Dose Factors:	ICRP 68, 5µm	ICRP 72 for Adult		Release
Receptor:	**Collocated Worker**	**Onsite Public**	**Offsite Public**	Duration 0.5 h
Distance:	369 m	8,550 m	15,209 m	
X/Q:	3.50E-03	3.06E-05	1.48E-05	s/m3
Breathing Rate:	3.35E-04	3.29E-04	3.29E-04	m3/s
Unit DCF:	2.00E+07	3.12E+07	3.12E+07	rem/g
Total Dose:	**2.44E+00**	**3.26E-02**	**1.57E-02**	**rem**
Consequence:	Low	na	Low	

Material source amounts are listed on the "UnitDF" page.

Nuclide	Grams per g	Specific Activity, Ci/g	Curies per g	FGR Index	4.160E-01 Fraction
Pu-238	6.48E-04	1.71E+01	1.11E-02	775	2.67E-02
Pu-239	8.36E-01	6.21E-02	5.19E-02	776	1.25E-01
Pu-240	1.34E-01	2.28E-01	3.05E-02	777	7.34E-02
Pu-241	2.30E-03	1.03E+02	2.37E-01	778	5.71E-01
Pu-242	2.64E-03	3.93E-03	1.04E-05	779	2.50E-05
Am-241	2.48E-02	3.43E+00	8.51E-02	788	2.05E-01
Sr-90	0.00E+00	1.37E+02	0.00E+00	164	0.00E+00
Cs-137	0.00E+00	8.70E+01	0.00E+00	371	0.00E+00

Figure B-9 (FIR-2) N-Cell Fire – Contaminated Process Equipment

RADIDOSE Version 3.0 (5-18-2005)

Input Parameter	User Input	Default	Description (based on user input)
Facility/Material (1-14):	13		User-defined mixture ("InSource" page)
Form of Material (1-10):	3		Non-combustible Contaminated Solids
Accident Type (1-6):	2		External Impact
Quantity at Risk (MAR):	1.44E+04		g
Damage Ratio:		1	
Airborne Release Fraction:	1.00E-03		ARF
Respirable Fraction:	1.00E-01		RF
Leak Path Factor:		1	LPF (applies to particulate only)
HEPA Filter Factor:	1		DF = 1 (applies to particulate only)
Collocated Worker Dose Factor:		3	ICRP 68, 5 µm AMAD
Onsite & Offsite Public Dose Factor:		7	ICRP 72 for Adult
Material Solubility Class:		2	compounds are generally soluble
Hanford Processing Area (1-4):		2	200 Area
Distance or X/Q for Collocated Worker:	3.50E-03	at 369 m	s/m3
Distance or X/Q for Onsite Public:	8,550		meters
Distance or X/Q for Offsite Public:	15,209		meters
Emission Source Type (1-4):		1	Point source at ground level
Release Duration (0 to 8760 h):		0.5	hours

Description of Accident Scenario: Edit using function key F2. Carriage returns are not allowed.

Section 3.4.7.a: (NPH-1) Seismic - 202A and Deep-Bed Filters
MAR = 14,408 grams (January 2018)
DR and LPF = 1.0 (DOE-STD-3009-14; 3.2.4.1)
ARF x RF = 1.0E-03 x 1.0E-01 (DOE-HDBK-3010-94; 4.4.3.3.2)
X/Q' = 3.50E-03 (DOE-STD-3009-14; 3.2.4.2)

Dose Results for the Postulated Accident:

User-defined mixture ("InSource" page)
Non-combustible Contaminated Solids
Point Source At Ground Level **200 Area**
Total Respirable Release: 1.44E+00 g

Dose Factors:	ICRP 68, 5µm	ICRP 72 for Adult		Release
Receptor:	**Collocated Worker**	**Onsite Public**	**Offsite Public**	Duration 0.5 h
Distance:	369 m	8,550 m	15,209 m	
X/Q:	3.50E-03	3.06E-05	1.48E-05	s/m3
Breathing Rate:	3.35E-04	3.29E-04	3.29E-04	m3/s
Unit DCF:	1.99E+07	3.09E+07	3.09E+07	rem/g
Total Dose:	**3.36E+01**	**4.48E-01**	**2.16E-01**	**rem**
Consequence:	Moderate	na	Low	

Material source amounts are listed on the "UnitDF" page.

Nuclide	Grams per g	Specific Activity, Ci/g	Curies per g	FGR Index	1.397E+00 Fraction
Pu-238	6.29E-04	1.71E+01	1.08E-02	775	7.70E-03
Pu-239	8.30E-01	6.21E-02	5.15E-02	776	3.69E-02
Pu-240	1.30E-01	2.28E-01	2.96E-02	777	2.12E-02
Pu-241	2.26E-03	1.03E+02	2.33E-01	778	1.67E-01
Pu-242	2.69E-03	3.93E-03	1.05E-05	779	7.55E-06
Am-241	2.48E-02	3.43E+00	8.51E-02	788	6.09E-02
Sr-90	3.22E-03	1.37E+02	4.39E-01	164	3.14E-01
Cs-137	6.30E-03	8.70E+01	5.48E-01	371	3.92E-01

Figure B-10 (NPH-1) Seismic Event – 202A and Deep Bed Filters

RADIDOSE Version 3.0 (5-18-2005)

Input Parameter	User Input	Default	Description (based on user input)
Facility/Material (1-14):	13		User-defined mixture ("InSource" page)
Form of Material (1-10):	3		Non-combustible Contaminated Solids
Accident Type (1-6):	2		External Impact
Quantity at Risk (MAR):	5.17E+03		g
Damage Ratio:		1	
Airborne Release Fraction:	1.00E-03		ARF
Respirable Fraction:	1.00E-01		RF
Leak Path Factor:		1	LPF (applies to particulate only)
HEPA Filter Factor:	1		DF = 1 (applies to particulate only)
Collocated Worker Dose Factor:		3	ICRP 68, 5 µm AMAD
Onsite & Offsite Public Dose Factor:		7	ICRP 72 for Adult
Material Solubility Class:		2	compounds are generally soluble
Hanford Processing Area (1-4):		2	200 Area
Distance or X/Q for Collocated Worker:	3.50E-03	at 369 m	s/m3
Distance or X/Q for Onsite Public:	8,550		meters
Distance or X/Q for Offsite Public:	15,209		meters
Emission Source Type (1-4):		1	Point source at ground level
Release Duration (0 to 8760 h):		0.5	hours

Description of Accident Scenario: Edit using function key F2. Carriage returns are not allowed.

Section 3.4.7.b: (NPH-1) Seismic - Tunnel 2 - All Except 324 Waste
MAR = 5,167 grams (January 2018)
DR and LPF = 1.0 (DOE-STD-3009-14; 3.2.4.1)
ARF x RF = 1.0E-03 x 1.0E-01 (DOE-HDBK-3010-94; 4.4.3.2)
X/Q' = 3.50E-03 (DOE-STD-3009-14; 3.2.4.2)

Dose Results for the Postulated Accident:

User-defined mixture ("InSource" page)
Non-combustible Contaminated Solids
Point Source At Ground Level **200 Area**

Total Respirable Release: 5.17E-01 g

Dose Factors:	ICRP 68, 5µm	ICRP 72 for Adult		Release
Receptor:	**Collocated Worker**	**Onsite Public**	**Offsite Public**	Duration 0.5 h
Distance:	369 m	8,550 m	15,209 m	
X/Q:	3.50E-03	3.06E-05	1.48E-05	s/m3
Breathing Rate:	3.35E-04	3.29E-04	3.29E-04	m3/s
Unit DCF:	2.29E+07	3.54E+07	3.54E+07	rem/g
Total Dose:	**1.39E+01**	**1.84E-01**	**8.86E-02**	**rem**
Consequence:	Low	na	Low	

Material source amounts are listed on the "UnitDF" page.

Nuclide	Grams per g	Specific Activity, Ci/g	Curies per g	FGR Index	4.867E+00 Fraction
Pu-238	4.44E-03	1.71E+01	7.61E-02	775	1.56E-02
Pu-239	8.41E-01	6.21E-02	5.22E-02	776	1.07E-02
Pu-240	9.83E-02	2.28E-01	2.24E-02	777	4.60E-03
Pu-241	7.59E-03	1.03E+02	7.82E-01	778	1.61E-01
Pu-242	0.00E+00	3.93E-03	0.00E+00	779	0.00E+00
Am-241	1.07E-02	3.43E+00	3.66E-02	788	7.53E-03
Sr-90	1.27E-02	1.37E+02	1.73E+00	164	3.55E-01
Cs-137	2.50E-02	8.70E+01	2.17E+00	371	4.46E-01

Figure B-11 (NPH-1) Seismic Event – Tunnel 2 (No 324 Waste)

RADIDOSE Version 3.0 (5-18-2005)

Input Parameter	User Input	Default	Description (based on user input)
Facility/Material (1-14):	13		User-defined mixture ("InSource" page)
Form of Material (1-10):	7		Pu Oxide and Other Powders
Accident Type (1-6):	2		External Impact
Quantity at Risk (MAR):	2.10E+03		g
Damage Ratio:		1	
Airborne Release Fraction:	1.00E-03		ARF
Respirable Fraction:	1.00E-01		RF
Leak Path Factor:		1	LPF (applies to particulate only)
HEPA Filter Factor:	1		DF = 1 (applies to particulate only)
Collocated Worker Dose Factor:		3	ICRP 68, 5 µm AMAD
Onsite & Offsite Public Dose Factor:		7	ICRP 72 for Adult
Material Solubility Class:	1		compounds are generally very soluble
Hanford Processing Area (1-4):		2	200 Area
Distance or X/Q for Collocated Worker:	3.50E-03	at 369 m	s/m3
Distance or X/Q for Onsite Public:	8,550		meters
Distance or X/Q for Offsite Public:	15,209		meters
Emission Source Type (1-4):		1	Point source at ground level
Release Duration (0 to 8760 h):		0.5	hours

Description of Accident Scenario: Edit using function key F2. Carriage returns are not allowed.

Section 3.4.7.c: (NPH-1) Seismic - Tunnel 2 - 324 Waste Excluding Glass
MAR = 2,102 grams (January 2018)
DR and LPF = 1.0 (DOE-STD-3009-14; 3.2.4.1)
ARF x RF = 1.0E-03 x 1.0E-01 (DOE-HDBK-3010-94; 4.4.3.2)
X/Q' = 3.50E-03 (DOE-STD-3009-14; 3.2.4.2)
Solubility set to 1/high/very soluble/fast

Dose Results for the Postulated Accident:

User-defined mixture ("InSource" page)
Pu Oxide and Other Powders
Point Source At Ground Level **200 Area**

Material source amounts are listed on the "UnitDF" page.

Total Respirable Release: 2.10E-01 g

Dose Factors:	ICRP 68, 5µm	ICRP 72 for Adult		Release
Receptor:	**Collocated Worker**	**Onsite Public**	**Offsite Public**	Duration 0.5 h
Distance:	369 m	8,550 m	15,209 m	
X/Q:	3.50E-03	3.06E-05	1.48E-05	s/m3
Breathing Rate:	3.35E-04	3.29E-04	3.29E-04	m3/s
Unit DCF:	6.76E+06	5.94E+06	5.94E+06	rem/g
Total Dose:	**1.67E+00**	**1.26E-02**	**6.06E-03**	**rem**
Consequence:	Low	na	Low	

Nuclide	Grams per g	Specific Activity, Ci/g	Curies per g	FGR Index	1.027E+02 Fraction
Pu-238	9.64E-06	1.71E+01	1.65E-04	775	1.61E-06
Pu-239	1.01E-02	6.21E-02	6.28E-04	776	6.11E-06
Pu-240	1.56E-03	2.28E-01	3.56E-04	777	3.46E-06
Pu-241	1.32E-04	1.03E+02	1.36E-02	778	1.33E-04
Pu-242	3.61E-06	3.93E-03	1.42E-08	779	1.38E-10
Am-241	2.11E-04	3.43E+00	7.24E-04	788	7.05E-06
Sr-90	3.38E-01	1.37E+02	4.62E+01	164	4.50E-01
Cs-137	6.50E-01	8.70E+01	5.65E+01	371	5.50E-01

Figure B-12 (NPH-1) Seismic Event – Tunnel 2 324 Waste (No Glass)

Appendix C

Hazardous Material Inventories

Contents

C.1 PUREX Canyon Building and Ventilation System C-4
C.1.1 Overview C-4
C.1.2 Quantity and Composition of Measured Plutonium C-4
C.1.3 202A Inventory Decay and Consolidation C-6

C.2 PUREX Storage Tunnels C-10
C.2.1 Overview C-10
C.2.2 PUREX Storage Tunnel 1 ..... C-10
C.2.3 PUREX Storage Tunnel 2 ..... C-11
C.2.3.1 Inventory Excluding 324 Facility Items C-11
C.2.3.2 324 Facility Waste Activity C-13
C.2.3.3 324 Facility Waste Containers C-21

C.3 Hazardous Material Inventories C-31

C.4 References C-39

Tables

Table C-1. Isotopic Distribution for Measured Pu C-5
Table C-2. Assumed Composition of the Measured Pu (12/1996) C-6
Table C-3. 202A Summarized, January 2018 [grams] C-6
Table C-4. 202A Summarized, January 2018 [DE-Ci] C-7
Table C-5. 202A and Filter Inventory Starting Values: March 2003 [Curies] C-8
Table C-6. 202A and Filter Inventory Decayed to January 2018 [Curies] C-8
Table C-7. 202A and Filter Inventory Decayed to January 2018 [DE-Ci] C-9
Table C-8. 202A and Filter Inventory Decayed to January 2018 [grams] C-9
Table C-9. Storage Tunnel 1 Inventory C-11
Table C-10. Storage Tunnel 2 Inventory (Excluding 324 Waste Items) C-12
Table C-11. Consolidated Tunnel 2 Inventory From 202A C-12
Table C-12. 324 Waste Item Shipments, 1997 ..... C-17
Table C-13. 324 Waste Decayed and Consolidated, 2018 ..... C-18
Table C-14. Consolidated 324 Waste Items (No Glass) C-19
Table C-15. DAH-8M400-95-015, Appendix A, Vitrified Glass Data Sheets C-20
Table C-16. Chemical Hazards Material in Deactivated PUREX C-31
Table C-17. Radiological Inventory in Deactivated PUREX C-32
Table C-18. Detailed Residual Radiological Material in Deactivated PUREX C-34

Figures

Figure C-1. Second Page of June 1996 Haas DSI C-13
Figure C-2. Third Page of June 1996 Haas DSI C-14
Figure C-3. Third Page of June 1996 Haas DSI C-15
Figure C-4. Fourth Page of June 1996 Haas DSI C-16
Figure C-5. 324 Hotcell Floor Debris C-21
Figure C-6. Engineered Container Diagram C-22
Figure C-7. Engineered Containers in 324 B-Cell C-23
Figure C-8. Payload Configuration for Dispersible Waste C-24
Figure C-9. RODC Staged in PUREX G-Cell C-24
Figure C-10. Drawing of Grout Container C-25
Figure C-11. Drawing of SEG Cask Liner C-26
Figure C-12. SEG Cask Liner Packages Staged in G-Cell C-27
Figure C-13. Position 24 Loading Plan C-28
Figure C-14. Position 25 Loading Plan C-29
Figure C-15. 324 Waste Items in Storage Tunnel 2 ..... C-30
Figure C-16. Stored Material in PUREX Storage Tunnel 1 (218-E-14) C-35
Figure C-17. Stored Material in PUREX Storage Tunnel 2 (218-E-15) C-36

Appendix C
Hazardous Material Inventories

C.1 PUREX Canyon Building and Ventilation System

C.1.1 Overview

The radiological inventory of the Plutonium-Uranium Extraction (PUREX) 202A Building is provided in HNF-2545, *Plutonium-Uranium Extraction Facility (PUREX) Plutonium and Fission Product Residual Estimates*. A summary of the inventory by location is provided in Section C.3.

This section describes the evaluation and assessment of the measured and estimated quantities of plutonium in the canyon cells, rooms, and deep-bed filters. Fission products other than those that are assumed present in some of the plutonium, as discussed below, are not addressed here. However, the fission products are included in the Section C.3 summary and were considered in the accident analyses (Chapter 3.0).

HNF-2545 provided "measured" and "estimated" amounts of plutonium and processing residuals in the PUREX Canyon, cells, and other areas, from which a current estimate of the nuclide composition was made. The measured plutonium values were obtained in accessible areas of the facility by nondestructive assay (NDA), while estimated quantities of plutonium in inaccessible areas were based on process knowledge and facility operating history. As there was no information to the contrary, the estimated residual plutonium was assumed to be from the processing of irradiated N-Reactor fuel.

Specifically, the nuclide mix in the estimated plutonium was conservatively assumed to be characteristic of N-Reactor Mark 1A fuel at 180 days after irradiation to 3,000 MWd/t, but not including the short-lived (i.e., less than 1 year half-life) nuclides. This particular fuel type and exposure (characteristic of fuel-grade plutonium) was chosen because the yield of the nuclides that principally contribute to the accident dose is largest for Mark 1A fuel at 3,000 MWd/t.

Where <u>measured</u> amounts of plutonium were noted in HNF-2545, the composition of the plutonium was taken to be appropriate to fuel-grade plutonium, decay-corrected from the approximate midpoint of the first PUREX processing period to March 2003 and consolidated. The values derived in 2003 were then decayed to January 2018. It was assumed that no significant fission products were present in the measured plutonium, since the NDA method used for the measurement would not have been possible in the presence of significant fission product activity. Details of the evaluation and assessment are discussed in the following sections.

C.1.2 Quantity and Composition of Measured Plutonium

The Pu quantities listed in HNF-2545 and Section C.1.3 that were measured via NDA are assumed to be ^{239}Pu. The basis for this assumption is that NDA aids in the identification of radioactive material by matching the energy of the detected radiation with unique values associated with different isotopes, akin to a fingerprint. Plutonium is effectively never found

pure at the macro level; if ^{239}Pu is detected there will also be other Pu isotopes at minimum. Therefore, the amount measured is divided by the fraction of Pu in the plutonium known (or assumed) to be present at the time of the measurement.

December 1996 was used as the measurement date, and the assumed original source is N-Reactor Mark 1A fuel in December 1964 for a bounding result.

Table C-1 shows the isotopic composition (from SD-HS-SAR-001) for the "measured" plutonium at 180 days after irradiation, which has been set as December 1964, 32 yr later (December 1996). Due to the isotopes within the mixture decaying at different rates, the isotopic distribution has changed over time, most visible with ^{241}Pu and ^{241}Am. When the inventory was decayed to 2018, these values were not updated other otherwise changed; they are included to show the assumptions upon which the starting inventory values are based.

Table C-1. Isotopic Distribution for Measured Pu

Isotope	12/1/1964 [g/t]	Mass Fraction	12/1/1996 [g/t]	Mass Fraction
^{238}Pu	2.15E+00	9.47E-04	1.67E+00	7.36E-04
^{239}Pu	1.90E+03	8.36E-01	1.90E+03	8.37E-01
^{240}Pu	2.98E+02	1.31E-01	2.97E+02	1.31E-01
^{241}Pu	6.59E+01	2.90E-02	1.41E+01	6.23E-03
^{242}Pu	6.16E+00	2.71E-03	6.16E+00	2.72E-03
^{241}Am	--	--	5.17E+01	2.28E-02
Total:	**2.27E+03**	**1.00E+00**	**2.27E+03**	**1.00E+00**

Note: [g/t] = Grams per ton of uranium after irradiation.

As indicated in Table C-1, the ^{239}Pu fraction in the measured plutonium at the time of the measurement is 0.837. Therefore, the total of the measured plutonium (including the ^{241}Am) at the time of the measurement is:

$$1 \div 0.837 = 1.195$$

This shows the total amount of Pu present is actually 1.195 times the measured value of ^{239}Pu.

Table C-2 shows the assumed isotopic composition of the measured plutonium at the time of the measurements for each canyon location where measurements were made. Note that the values given in all three of these tables have been rounded to show only 2 significant digits, to reflect the actual uncertainties in the measurements.

Table C-2. Assumed Composition of the Measured Pu (12/1996)

[grams]	E-Cell (Skip)	L-Cell	N-Cell	PR Room	Total
Measured	**400**	**3,896**	**1,643**	**1,199**	**7,138**
^{238}Pu	0.4	3.4	1.4	1.1	6.3
^{239}Pu	400	3,900	1,600	1,200	7,100
^{240}Pu	63	610	260	190	1,123
^{241}Pu	3.0	29.0	12.0	9.0	53.0
^{242}Pu	1.3	13.0	5.3	3.9	23.5
Total Pu	**468**	**4,555**	**1,879**	**1,404**	**8,306**
^{241}Am	11	110	45	33	199

C.1.3 202A Inventory Decay and Consolidation

Tables C-3 and C-4 show the inventory for 202A and the Deep Bed Filters, consolidated and decayed to January 2018, in both grams and DE-Ci.

Table C-3. 202A Summarized, January 2018 [grams]

[grams]	L-Cell	N-Cell	PR Room	White Room	202A Remainder	202A Total
^{238}Pu	3	1	1	0	3	9
^{239}Pu	3,863	1,610	1,207	435	4,507	11,621
^{240}Pu	613	258	188	66	696	1,822
^{241}Pu	11	4	3	1	12	32
^{242}Pu	13	5	4	1	15	38
^{241}Am	116	48	36	13	134	347
^{90}Sr	0	0	0	0	43	43
^{137}Cs	0	0	0	0	83	83
Pu	**4,502**	**1,879**	**1,403**	**503**	**5,234**	**13,521**
Cs/Sr	**0**	**0**	**0**	**0**	**126**	**126**
Total	**4,619**	**1,927**	**1,439**	**516**	**5,494**	**13,994**

Table C-4. 202A Summarized, January 2018 [DE-Ci]

[DE-Ci]	L-Cell	N-Cell	PR Room	White Room	202A Remainder	202A Total
^{238}Pu	46	20	14	5	54	139
^{239}Pu	240	100	75	27	280	722
^{240}Pu	140	59	43	15	159	415
^{241}Pu	19	8	6	2	23	59
^{242}Pu	0	0	0	0	0	0
^{241}Am	335	138	103	37	386	999
^{90}Sr	0	0	0	0	3	3
^{137}Cs	0	0	0	0	1	1
Pu	**445**	**187**	**138**	**49**	**516**	**1,334**
Cs/Sr	**0**	**0**	**0**	**0**	**3**	**3**
Total	**781**	**324**	**241**	**86**	**905**	**2,337**

The following tables document the decay of the 202A inventory to January 2018 and the conversion into grams and DE-Ci.

Table C-5: 202A and Filter inventory starting values, March 2003 [Curies]

These are the values provided in the initial revision of this document, with values being rounded up to reflect uncertainty.

Table C-6: 202A and Filter inventory decayed to January 1, 2018 [Curies]

The 2003 inventory was decayed to 2018 using the radioactive decay equation in an Excel spreadsheet.

Table C-7: 202A and Filter inventory converted [DE-Ci]

The 2018 inventory was converted to DE-Ci using the conversion factors provided in Appendix A of HNF-EP-0063.

Table C-8: 202A and Filter inventory converted [grams]

The 2018 inventory was converted to grams using the specific activity values provided in RADIDOSE Rev 3.

.

Table C-5. 202A and Filter Inventory Starting Values: March 2003 [Curies]

[Curies]	A-Cell	B-Cell	C-Cell	D-Cell	E-Cell no skip	E-Cell skip	H-Cell	J-Cell (J5A)	J-Cell	L-Cell	White Room	N-Cell	PR Room	Deep-Bed Fil	Total
^{238}Pu	9	9	9	15	10	6	5	1	2	56	6	24	17	5	**174**
^{239}Pu	37	37	37	64	43	25	21	5	11	240	27	100	75	21	**743**
^{240}Pu	21	21	21	37	24	14	12	3	6	140	15	59	43	12	**428**
^{241}Pu	340	340	340	590	390	230	200	49	97	2200	240	930	680	200	**6,826**
^{242}Pu	0.008	0.008	0.008	0.013	0.009	0.005	0.004	0.001	0.002	0.05	0.005	0.02	0.015	0.004	**0**
^{241}Am	60	60	60	100	69	40	34	9	17	390	43	160	120	34	**1,196**
^{90}Sr	1300	1300	1300	2200	1500		730							730	**9,060**
^{137}Cs	1600	1600	1600	2700	1800		900							900	**11,100**
All Pu	**407**	**407**	**407**	**706**	**467**	**275**	**238**	**58**	**116**	**2,636**	**288**	**1,113**	**815**	**238**	**8,171**
All Cs/Sr	**2,900**	**2,900**	**2,900**	**4,900**	**3,300**	**0**	**1,630**	**0**	**0**	**0**	**0**	**0**	**0**	**1,630**	**20,160**
Total:	**3,367**	**3,367**	**3,367**	**5,706**	**3,836**	**315**	**1,902**	**67**	**133**	**3,026**	**331**	**1,273**	**935**	**1,902**	**29,527**

Table C-6. 202A and Filter Inventory Decayed to January 2018 [Curies]

[Curies]	A-Cell	B-Cell	C-Cell	D-Cell	E-Cell no skip	E-Cell skip	H-Cell	J-Cell (J5A)	J-Cell	L-Cell	White Room	N-Cell	PR Room	Deep-Bed Fil	Total
^{238}Pu	8	8	8	13	9	5	4	1	2	50	5	21	15	4	**155**
^{239}Pu	37	37	37	64	43	25	21	5	11	240	27	100	75	21	**743**
^{240}Pu	21	21	21	37	24	14	12	3	6	140	15	59	43	12	**427**
^{241}Pu	167	167	167	290	192	113	98	24	48	1,082	118	457	334	98	**3,356**
^{242}Pu	0	0	0	0	0	0	0	0	0	0	0	0	0	0	**0**
^{241}Am	61	61	61	102	71	41	35	9	17	399	44	164	123	35	**1,225**
^{90}Sr	911	911	911	1,542	1,052	0	512	0	0	0	0	0	0	512	**6,352**
^{137}Cs	1,139	1,139	1,139	1,922	1,281	0	641	0	0	0	0	0	0	641	**7,901**
All Pu	**233**	**233**	**233**	**404**	**268**	**157**	**136**	**33**	**66**	**1,511**	**165**	**637**	**467**	**136**	**4,681**
All Cs/Sr	**2,050**	**2,050**	**2,050**	**3,464**	**2,333**	**0**	**1,152**	**0**	**0**	**0**	**0**	**0**	**0**	**1,152**	**14,252**
Total:	**2,345**	**2,345**	**2,345**	**3,971**	**2,671**	**198**	**1,323**	**42**	**84**	**1,911**	**209**	**801**	**590**	**1,323**	**20,158**

Table C-7. 202A and Filter Inventory Decayed to January 2018 [DE-Ci]

[DE-Ci]	A-Cell	B-Cell	C-Cell	D-Cell	E-Cell no skip	E-Cell skip	H-Cell	J-Cell (J5A)	J-Cell	L-Cell	White Room	N-Cell	PR Room	Deep-Bed Fil	Total
^{238}Pu	7	7	7	12	8	5	4	1	2	46	5	20	14	4	**143**
^{239}Pu	37	37	37	64	43	25	21	5	11	240	27	100	75	21	**743**
^{240}Pu	21	21	21	37	24	14	12	3	6	140	15	59	43	12	**427**
^{241}Pu	3	3	3	5	3	2	2	0	1	19	2	8	6	2	**60**
^{242}Pu	0	0	0	0	0	0	0	0	0	0	0	0	0	0	**0**
^{241}Am	52	52	52	86	59	34	29	8	15	335	37	138	103	29	**1,029**
^{90}Sr	0	0	0	1	1	0	0	0	0	0	0	0	0	0	**3**
^{137}Cs	0	0	0	0	0	0	0	0	0	0	0	0	0	0	**1**
All Pu	**68**	**68**	**68**	**118**	**79**	**46**	**39**	**9**	**19**	**445**	**49**	**187**	**138**	**39**	**1,373**
All Cs/Sr	**1**	**1**	**1**	**1**	**1**	**0**	**0**	**0**	**0**	**0**	**0**	**0**	**0**	**0**	**4**
Total:	**121**	**121**	**121**	**205**	**139**	**80**	**68**	**17**	**34**	**781**	**86**	**324**	**241**	**68**	**2,406**

Table C-8. 202A and Filter Inventory Decayed to January 2018 [grams]

[grams]	A-Cell	B-Cell	C-Cell	D-Cell	E-Cell no skip	E-Cell skip	H-Cell	J-Cell (J5A)	J-Cell	L-Cell	White Room	N-Cell	PR Room	Deep-Bed Fil	Total
^{238}Pu	0	0	0	1	1	0	0	0	0	3	0	1	1	0	**9**
^{239}Pu	596	596	596	1,030	692	402	338	80	177	3,863	435	1,610	1,207	338	**11,959**
^{240}Pu	92	92	92	162	105	61	53	13	26	613	66	258	188	53	**1,874**
^{241}Pu	2	2	2	3	2	1	1	0	0	11	1	4	3	1	**33**
^{242}Pu	2	2	2	3	2	1	1	0	1	13	1	5	4	1	**39**
^{241}Am	18	18	18	30	21	12	10	3	5	116	13	48	36	10	**357**
^{90}Sr	7	7	7	11	8	0	4	0	0	0	0	0	0	4	**46**
^{137}Cs	13	13	13	22	15	0	7	0	0	0	0	0	0	7	**91**
All Pu	**692**	**692**	**692**	**1,199**	**802**	**466**	**393**	**94**	**204**	**4,502**	**503**	**1,879**	**1,403**	**393**	**13,914**
All Cs/Sr	**20**	**20**	**20**	**33**	**22**	**0**	**11**	**0**	**0**	**0**	**0**	**0**	**0**	**11**	**137**
Total:	**729**	**729**	**729**	**1,262**	**845**	**478**	**414**	**97**	**209**	**4,619**	**516**	**1,927**	**1,439**	**414**	**14,408**

C.2 PUREX Storage Tunnels

C.2.1 Overview

The radiological inventory of the PUREX Storage Tunnels is provided in HNF-SD-CP-HIE-002, *Plutonium-Uranium Extraction (PUREX) Facility Storage Tunnel Hazard Analysis*. A summary of the inventory by location, with the activity of the item when it was placed in the tunnel, is provided in Section C.3. The following sections describe the evaluation and assessment of the storage tunnel inventories.

The HNF-SD-CP-HIE-002 document provided the activity content (in curies) of the waste emplaced in the PUREX Storage Tunnels, from which an estimate of the current isotopic composition was made. The emplaced waste, except for specific quantities of plutonium as noted below, was assumed to be residuals from the processing of irradiated fuel. The nuclide mix was decay-corrected from January 1, 1997 to January 1, 2018. No nuclides were added or removed from those provided in HNF-SD-CP-HIE-002 aside from ^{241}Am ingrowth in Tunnel 2.

C.2.2 PUREX Storage Tunnel 1

There are eight modified railcars containing contaminated wastes in Storage Tunnel 1. The first railcar was placed in the storage tunnel in June 1960 and the last (eighth) railcar was emplaced in January 1965. Per HNF-SD-CP-HIE-002, these railcars contained a total of 87,800 Ci of activity when they were placed in Storage Tunnel 1.

For a starting point, Appendix B of HNF-SD-CP-HIE-002 was used. This reference was chosen due to it evaluating multiple other references, and being a long-accepted reference document, whose values are close to the majority of other reference documents that were reviewed.

In Appendix B, the inventory values were taken from “Tunnel #1 Curie Estimate Worksheet” on page 40. Half-life values were obtained from Nuclides and Isotopes, Chart of Nuclides, Rev 16, and specific activity values were obtained from RADIDOSE Version 3. The inventory was then decayed from January 1, 1997 to January 1, 2018, which is provided in Table C-7

As noted previously, Storage Tunnel 1 has been stabilized by being filled with an engineered grout, as described in CHPRC-03519, Rev 1, *PUREX Tunnel 1 Stabilization Specification*. Therefore, none of the Storage Tunnel 1 inventory can become MAR liable to release as the result of an accident. While there are no longer accidents involving Tunnel 1, these values are shown in Table C-9 to provide a consistent methodology for both Tunnels.

Table C-9. Storage Tunnel 1 Inventory

Isotope	1997 [Ci]	Halflife [y]	HC2 [g]	SA [Ci/g]	[DE-Ci/Ci]	2018 [g]	2018 [DE-Ci]	2018 [Ci]	HC2 Ratio
^{239}Pu	63	2.41E+04	9.00E+02	6.21E-02	1.00E+00	1,014	63	63	1.13E+00
^{241}Pu	438	1.44E+01	2.80E+01	1.03E+02	1.80E-02	2	3	159	5.53E-02
^{90}Sr	1,146	2.88E+01	1.60E+02	1.37E+02	4.80E-04	5	0	691	3.15E-02
^{137}Cs	1,390	3.01E+01	1.00E+03	8.70E+01	9.20E-05	10	0	857	9.85E-03
^{95}Zr	0	1.75E-01	6.90E+01	2.15E+04	5.00E-05	0	0	0	0.00E+00
^{95}Nb	0	9.59E-02	--	3.90E+04	3.00E-05	0	0	0	--
^{106}Ru	0	1.02E+00	1.90E+00	3.35E+03	1.58E-04	0	0	0	0.00E+00
All Pu	**501**					**1,015**	**66**	**222**	**--**
Major FP	**2,536**					**15**	**0**	**1,548**	**--**
Minor FP	**0**					**0**	**0**	**0**	**--**
Total:	**3,037**					**1,030**	**66**	**1,770**	**1.22E+00**

C.2.3 PUREX Storage Tunnel 2

Storage Tunnel 2 houses 28 railcars containing contaminated wastes. The first railcar was placed in the storage tunnel in December 1967 and the last railcar was placed in June 1996.

For a starting point with respect to Tunnel 2, two separate references were required. HNF-SD-CP-HIE-002, Appendix B was chosen for all the radiological inventory except the 324 Facility items (Tunnel Positions #24 and #25). The material from the 324 Facility had analysis performed on it beyond simple radioactive decay, and for that reason the numbers were not used. As with Tunnel 1, this reference was chosen due to it evaluating multiple other references, and being a long-accepted reference document with values reasonably close to many other accepted reference documents.

C.2.3.1 Inventory Excluding 324 Facility Items

On page 42 of HNF-SD-CP-HIE-002, there is a consolidated distribution of radionuclides for Tunnel 2 inventory, excluding the 324 items. This distribution is the starting point for the Tunnel 2 inventory, which is shown in Table C-10, along with the conversion factors used

Table C-10. Storage Tunnel 2 Inventory (Excluding 324 Waste Items)

Isotope	1997 [g]	[DE-Ci]	1997 [Ci]	Halflife [y]	SA [Ci/g]	[DE-Ci/Ci]	2018 [g]	[DE-Ci]	2018 [Ci]
^{238}Pu	27	428	464	**88**	1.71E+01	9.22E-01	23	362	393
^{239}Pu	4,350	270	270	**24,100**	6.21E-02	1.00E+00	4,348	270	270
^{240}Pu	509	116	116	**6,560**	2.28E-01	1.00E+00	508	116	116
^{241}Pu	108	200	11,100	**14**	1.03E+02	1.80E-02	39	73	4,039
^{241}Am	53	154	183	**433**	3.43E+00	8.40E-01	55	159	189
^{90}Sr	108	7	14,800	**29**	1.37E+02	4.80E-04	65	4	8,927
^{137}Cs	209	2	18,200	**30**	8.70E+01	9.20E-05	129	1	11,216
^{3}H	0	0	77	**12**	9.56E+03	5.20E-06	0	0	24
^{85}Kr	4	0	1,550	**11**	3.93E+02	0.00E+00	1	0	401
^{106}Ru	1	1	3,200	**1.0**	3.35E+03	1.58E-04	0	0	0
^{125}Sb	1	0	842	**2.8**	1.03E+03	2.80E-05	0	0	4
^{134}Cs	1	0	1,360	**2.1**	1.30E+03	1.32E-04	0	0	1
^{144}Ce	2	4	5,170	**0.8**	3.19E+03	7.20E-04	0	0	0
^{147}Pm	17	2	16,000	**2.6**	9.28E+02	1.00E-04	0	0	62
Totals:	**5,391**	**1,182**	**73,332**				**5,168**	**985**	**25,642**

Table C-10 then consolidates down to Table C-11. Table C-10 shows why the minor fission products can be omitted; the DE-Ci values associated with them are affectively zero, especially compared to the other nuclides.

Table C-11. Consolidated Tunnel 2 Inventory From 202A

Isotope	2018 [g]	[DE-Ci]	2018 [Ci]
^{238}Pu	23	362	393
^{239}Pu	4,348	270	270
^{240}Pu	508	116	116
^{241}Pu	39	73	4,039
^{241}Am	55	159	189
^{90}Sr	65	4	8,927
^{137}Cs	129	1	11,216
Totals:	**5,167**	**985**	**25,150**

C.2.3.2 324 Facility Waste Activity

For the waste items from the 324 Facility, the Haas DSI is used as a starting point for developing the inventory. The relevant pages from the Haas DSI are provided below in Figure C-1, Figure C-2, Figure C-3, and Figure C-4.

There were seventeen shipments from the 324 Facility to PUREX, two of which contained material that is considered dispersible and at least four that contain vitrified glass. The engineered containers holding the dispersible waste were transported to PUREX on a rail car in the 22.5 Ton cask, otherwise known as the Steel Waste Package (SWP) during shipments #7 and #8. These shipments are documented in manifests PNL-324-96-005 and PNL-324-96-012.

The remainder of the items were grouted into grout containers and shipped to PUREX by rail in the SEG cask.

A DSI issues by C.R. Haas on June 28, 1996 provides details on these items. Tables providing information on the 324 waste items from the Haas DSI are provided in Figures C-1 though C-4.

Shipment #	Date Received	Package ID #	Gross Weight Kg (lbs)	Container Type	Waste Description
1	12-20-95	BP 195046	714 (1574)	SEG	Mild steel grout container, vacuum cleaner, steel disc; Paper HEPA filter media
2	1-3-96	BP 195047	982 (2165)	SEG	Mild steel grout container; Stainless steel shield plug; Paper HEPA filter media
3	1-10-96	BP 195048	865 (1907)	SEG	Mild steel grout container, cover plate, wire mesh; Stainless steel offgas jumper; Paper HEPA filter media
4	1-16-96	BP 195049	1232 (2716)	SEG	Mild steel grout container, cover plate, screens; Stainless steel electrode; Paper HEPA filter media
5	1-22-96	PNL-324-96-004	2523 (5562)	SEG	Mild steel grout container, 5-gallon bucket; Wood; Liquid metal seal solid flange; Lead shot, bricks; Window oil rags
6	1-31-96	BP 195050	797 (1757)	SEG	Mild steel grout container, steel plate; Paper HEPA filter media
7	3-1-96	PNL-324-96-012	2253 (4967)	22.5 Ton	Stainless steel engineered containers of hazardous and nonhazardous dispersible debris, special case waste container
8	3-6-96	PNL-324-96-005	1823 (4019)	22.5 Ton	Stainless steel engineered dispersible containers, can storage basket, hazardous feed cans
Total			11,189 (24,667)		

Shipments 1-8 moved to storage in tunnel #2, position 24, on April 26, 1996

Figure C-1. Second Page of June 1996 Haas DSI

Shipment #	Dose Rate @ Contact	Curie Content	Activation Nuclides	Pu Content (g)	Dangerous Waste	Waste Category/ Classification
1	120 Rem	5.41E+02	Cs-137 2.34E+02 Sr-90 3.65E+01	1.07E-02	N/A	Cat 3/TRU
2	1000 Rem	3.96E+02	Cs-137 8.80E+01 Sr-90 1.10E+02 Cs-134 1.00E-02 Co-60 1.00E-02 Eu-154 2.00E-02 Eu-155 2.00E-02	1.41E-01	N/A	Cat 3/TRU
3	1000 Rem	2.36E+03	Cs-137 5.25E+02 Sr-90 6.56E+02 Cs-134 4.00E-02 Co-60 5.00E-02 Eu-154 7.00E-02 Eu-155 3.00E-02	2.24E-01	N/A	Cat 3/TRU
4	1700 Rem	2.49E+03	Cs-137 5.54E+02 Sr-90 6.92E+02 Cs-134 5.50E-02 Co-60 7.40E-02 Eu-154 9.80E-02 Eu-155 3.30E-02	3.00E-01	N/A	Cat 3/TRU
5	340 R/Hr	9.00E+02	Cs-137 2.00E+02 Sr-90 2.50E+02	0.00	Pb ~ 1800 Kg Cd ~10.5 Kg Oil ~ 8.5 Kg	Cat 3/MW
6	200 Rem	2.84E+02	Cs-137 1.03E+02 Sr-90 3.90E+01 Cs-134 9.70E-02 Co-60 1.30E-01 Eu-154 1.70E-01 Eu-155 2.70E-02	7.75E-01	N/A	Cat 3/TRU
7	19K R/Hr	3.12E+04	Cs-137 1.00E+04 Sr-90 5.58E+03 Co-60 1.08E-01 Eu-154 6.56E+00	8.52E+00	Pb ~ <1 g Cr ~ <1 g Cd ~ <1 g	>Cat 3/TRU-M
8	22K R/Hr	2.05E+05	Cs-137 5.96E+04 Sr-90 4.32E+04 Eu-154 2.05E+00	1.40E+01	Pb ~ 1.5 Kg Cr ~1 Kg Ba ~ 3 Kg	>Cat 3/TRU-M
Total		~244,000 Ci		~24 g	Pb ~ 1802 Kg Cd ~ 10.5 Kg Oil ~ 8.5 Kg Cr ~ 1 Kg Ba ~ 3 Kg	

Shipments 1-8 moved to storage in tunnel #2, position 24, on April 26, 1996

Figure C-2. Third Page of June 1996 Haas DSI

Shipment #	Date Recevied	Package ID #	Gross Weight Kg (lbs)	Container Type	Waste Description
9	4-1-96	BP196003	2482 (5472)	SEG	Stainless steel grout container, engineered containers; refractory used in melter operations
10	4-28-96	BP196001	1778 (3920)	SEG	Stainless steel grout container; refractory used in melter operations
11	5-2-96	BP196002	2800 (6173)	SEG	Mild steel grout container; refractory brick/throat block refractory used in melter operations
12	5-7-96	PNLD-96-224	3332 (7346)	SEG	Mild steel grout container; stainless steel melter lid; Alfrax/Duraboard; grout
13	5-10-96	PNLD-96-225	2200 (4850)	SEG	Mild steel grout container; rubber hose; plastic; cloth; stainless steel; glass
14	5-23-96	BP196015	1115 (2458)	SEG	Mild steel grout container, funnel; glass
15	5-31-96	PNL-324-96-048	1550 (3417)	SEG	Mild steel grout container; stainless steel melter parts; paper HEPA filter media; SrF_2 capsules
16	6-3-96	BP196017	2818 (6213)	SEG	Mild steel grout container; melter glass canisters
17	6-8-96	BP196018	2818 (6213)	SEG	Mild steel grout container; melter glass canisters
Total			20,893 (46,062)		

Shipments 9-17 moved to storage in tunnel #2, position 25, on June 12, 1996

Figure C-3. Third Page of June 1996 Haas DSI

Shipment #	Dose Rate @ Contact	Curie Content	Activation Nuclides	Pu Content (g)	Dangerous Waste	Waste Category/ Classification
9	6159 R/Hr	3.54E+04	Cs-137 1.49E+04 Sr-90 2.79E+03	8.68E-02	N/A	>Cat 3/TRU
10	9550 R/Hr	3.90E+04	Cs-137 1.63E+04 Sr-90 3.22E+03	9.44E-02	N/A	>Cat 3/TRU
11	18372 R/Hr	7.35E+04	Cs-137 3.07E+04 Sr-90 6.07E+03	1.78E-01	N/A	>Cat 3/TRU
12	8169 R/Hr	1.99E+05	Cs-137 4.43E+04 Sr-90 5.53E+04	0.00	N/A	>Cat 3/LLW
13	1340 R/Hr	1.57E+05	Cs-137 3.48E+04 Sr-90 4.35E+04	0.00	N/A	>Cat 3/LLW
14	22K+ R/Hr	7.62E+05	Cs-137 2.71E+05 Sr-90 1.10E+05	1.75E+00	N/A	>Cat 3/TRU
15	4000 R/Hr	1.16E+05	Cs-137 1.52E+04 Sr-90 4.30E+04	1.00E+00	Ba ~ 4.2 g Cd ~ 1 g Cr ~ 1.8 g Pb ~ 1 g	>Cat 3/MW
16	20K+ R/Hr	2.56E+05	Cs-137 9.74E+04 Sr-90 3.08E+04	2.26E+01	N/A	>Cat 3/LLW
17	20K+ R/Hr	1.07E+05	Cs-137 3.94E+04 Sr-90 1.41E+04	1.69E+01	N/A	>Cat 3/LLW
Total		~1.75M Ci		~43.0 g	Ba ~ 4.2 g Cd ~ 1 g Cr ~ 1.8 g Pb ~ 1 g	

Shipments 9-17 moved to storage in tunnel #2, position 25, on June 12, 1996

Figure C-4. Fourth Page of June 1996 Haas DSI

Table C-12 contains the values provided in the Haas DSI. The Activation Nuclides column is used, the Curie Content column also includes ^{90}Y and ^{137m}Ba daughter products. Use of the daughter products will almost double the inventory, and their presence is already accounted for when using DE-Ci values.

In Table C-12, the rows 13, 14, 16, and 17 (shaded light gray) represent shipments of vitrified glass.

Table C-12. 324 Waste Item Shipments, 1997

Shipment	Pu [g]	^{137}Cs [Ci]	^{90}Sr [Ci]	^{134}Cs [Ci]	^{60}Co [Ci]	^{154}Eu [Ci]	^{155}Eu [Ci]	Pu [Ci]	Total [Ci]
1	0	234	37					0.0	**271**
2	0	88	110	0.0	0.0	0.0	0.0	0.0	**198**
3	0	525	656	0.0	0.1	0.1	0.0	0.0	**1,181**
4	0	554	692	0.1	0.1	0.1	0.0	0.0	**1,246**
5	0	200	250					0.0	**450**
6	1	103	39	0.1	0.1	0.2	0.0	0.0	**142**
7	9	10,000	5,580		0.1	6.6		0.5	**15,587**
8	14	59,600	43,200			2.1		0.9	**102,803**
9	0	14,900	2,790					0.0	**17,690**
10	0	16,300	3,220					0.0	**19,520**
11	0	30,700	6,070					0.0	**36,770**
12	0	44,300	55,300					0.0	**99,600**
13	0	34,800	43,500					0.0	**78,300**
14	2	271,000	110,000					0.1	**381,000**
15	1	15,200	43,000					0.1	**58,200**
16	23	97,400	30,800					1.4	**128,201**
17	17	39,400	14,100					1.0	**53,501**
All Disp	**23**	**69,600**	**48,780**	**0.0**	**0.1**	**8.6**	**0.0**	**1.4**	**118,390**
All Glass	**41**	**442,600**	**198,400**	**0.0**	**0.0**	**0.0**	**0.0**	**2.6**	**641,003**
All Other	**3**	**123,104**	**112,164**	**0.2**	**0.3**	**0.4**	**0.1**	**0.2**	**235,269**
Total:	**67**	**635,304**	**359,344**	**0.2**	**0.4**	**9.0**	**0.1**	**4.1**	**994,661**

Table C-13 provides the results of decaying, consolidating, and converting Table C-12 to Curies, DE-Ci, and grams.

Table C-13. 324 Waste Decayed and Consolidated, 2018

[Curies]	^{137}Cs	^{90}Sr	Pu	Total
All Disp	42,892	29,421	1.4	72,315
All Glass	272,760	119,664	2.6	392,427
All Other	75,865	67,651	0.2	143,516
Total:	**391,517**	**216,737**	**4.1**	**608,258**
[DE-Ci]	^{137}Cs	^{90}Sr	Pu	Total
All Disp	4	14	1.4	19
All Glass	0	0	0	0
All Other	7	32	0.2	40
Total:	**11**	**47**	**1.6**	**59**
[grams]	^{137}Cs	^{90}Sr	Pu	Total
All Disp	493	216	22.5	731
All Glass	3,136	877	41.2	4,054
All Other	872	496	2.8	1,371
Total:	**4,501**	**1,588**	**66.5**	**6,155**

In the DE-Ci portion of the table, the values for the vitrified glass were already very low, however values of 0 were entered manually due to the difficulty associated with receiving an inhaled dose from glass (ARFxRF=0).

From DOE-HDBK-3010-94, Section 4.3.1.1 Vitrified Waste:

> Monolithic borosilicate glasses incorporating high-level waste do not appear to have the potential to release any significant amount of non-volatile radionuclides. These materials would have been heated to temperatures exceeding those anticipated for most fire situation during formation and are not anticipated to undergo any chemical change under fire conditions.
>
> Notwithstanding, a bounding ARF and RF cannot be assessed at this time due to the lack of applicable data. From the information available, however, any release under industrial-type fire conditions appears to be negligible.

From DOE-HDBK-3010-94, Section 4.3.2.2 Blast Effects:

> For the pressure impulses generated by explosive events that may entrain and hurl aggregate materials, the crush-impact correlation presented in section 4.3.3 may be used to characterize the response provided an impact velocity can be estimated. No experimentally measured values for ARF and RF are available. If aggregate materials are

not hurled at considerable velocity, no significant airborne release is postulated. The potential releases for loose surface contamination on the solid are covered in Chapter 5.

The decayed, consolidated and converted 324 waste inventory, shipments of glass, is provided is Table C-14. This inventory has not been further consolidated into the remainder of the Storage Tunnel 2 inventory for the purpose of calculating dose consequences in RADIDOSE; the ^{137}Cs and ^{90}Sr waste have a higher solubility class associated with them. Since the exact isotopic composition of the Pu is not known, it is assigned the same isotopic composition as "Bounding Solid TRU Waste" in RADIDOSE, which corresponds to 12% ^{240}Pu.

Table C-14. Consolidated 324 Waste Items (No Glass)

Isotope	2018 [g]	[DE-Ci]	2018 [Ci]
^{238}Pu	0.02	0.32	0.35
^{239}Pu	21.25	1.32	1.32
^{240}Pu	3.28	0.75	0.75
^{241}Pu	0.28	0.52	28.68
^{242}Pu	0.01	0.00	0.00
^{241}Am	0.44	1.28	1.52
^{90}Sr	711	47	97,427
^{137}Cs	1,365	11	118,782
Totals:	2,102	62	216,242

To confirm the correct waste items are being assigned an ARFxRF value of zero, the inventory listings in DAH-8M400-95-015, *Radiological Consequence Analysis of a Hypothetical Release from PUREX Storage Tunnel No. 2 Associated with Interim Storage of Material from 324 Building*, Appendix A were reviewed. The tables in Appendix A of DAH-8M400-95-015 contain the isotopic makeup of the 324 waste items, including the glass waste. These values are provided in Table C-15.

Table C-12 shows that in the late 1990s shipments 13, 14, 16, and 17 had a combined total of ~641,000 Ci. Table C-15 shows a total of ~766,000 Ci of ^{137}Cs and ^{90}Sr. This confirms the correct shipments have been identified as containing vitrified glass waste.

Table C-15. DAH-8M400-95-015, Appendix A, Vitrified Glass Data Sheets

[curies]	Glass-1	Glass-2	Glass-3	Glass-4	Glass-5	Glass-6	Glass-7	Glass-8	Glass-9	Glass-10	Glass-11	Glass-12	Glass-13	Glass-14	Glass-14a	
Item	**WSEP**	**ZVDP**	**ZVDP**	**ZVDP**	**ZVDP**	**WV1**	**WV2**	**FRG A**	**FRG B**	**FRG 4**	**FRG 13**	**FRG 19**	**RLFCM**	**RLFCM**	**RLFCM**	**Total**
^{238}Pu						0.0	0.0	0.0	0.0	0.0	0.0	0.0	0.0	0.0	0.0	**0**
^{239}Pu											0.0	0.0	0.0	0.0	0.0	**0**
^{240}Pu											0.0	0.0	0.0	0.0	0.0	**0**
^{241}Pu						0.0	0.0	0.0	0.0	0.0	0.4	0.6	0.3	0.3	0.1	**2**
^{241}Am											0.1	0.1	0.1	0.1	0.0	**0**
^{90}Sr	726	161	806	645	645	429	429	360	90	360	51,600	73,700	39,200	39,200	13,100	**221,451**
^{137}Cs	1,430	19,200	3,900	21,500	18,600	4,160	4,160	3,490	873	3,490	126,000	164,000	87,100	87,100	0	**545,003**
^{90}Y	726	161	806	645	645	429	429	360	90	360						**4,651**
^{134}Cs						6	6	5	1	5						**25**
^{137m}Ba	1,370	18,300	3,730	20,600	17,800	3,980	3,980	3,350	837	3,350						**77,297**
^{154}Eu						27	27	23	6	23						**106**
^{234}U											0	0	0	0	0	**0**
^{235}U						0	0	0	0	0	0	0	0	0	0	**0**
^{236}U											0	0	0	0	0	**0**
^{238}U						0	0	0	0	0	0	0	0	0	0	**0**
^{243}Am											0	0	0	0	0	**0**
^{243}Cm																**0**
Pu	**0**	**0**	**0**	**0**	**0**	**0**	**0**	**0**	**0**	**0**	**1**	**1**	**0**	**0**	**0**	**2**
Cs/Sr	**2,156**	**19,361**	**4,706**	**22,145**	**19,245**	**4,589**	**4,589**	**3,850**	**963**	**3,850**	**177,600**	**237,700**	**126,300**	**126,300**	**13,100**	**766,454**
Total	**4,252**	**37,822**	**9,242**	**43,390**	**37,690**	**9,031**	**9,031**	**7,588**	**1,897**	**7,588**	**177,601**	**237,701**	**126,300**	**126,300**	**13,100**	**848,535**

C.2.3.3 324 Facility Waste Containers

In the mid-1990s, waste items were packaged in the 324 Facility hotcells, shipped to PUREX by rail, and then stored in Storage Tunnel 2 (218-E-15).

The items from the 324 facility are in two different configurations, which can be seen on the "Container Type" column of the Haas DSI, Figures C-1 and C-3. These configurations are identified on the Haas DSI as:

- 22.5 Ton
- SEG

The names come from the casks they were shipped to PUREX in. Further details, along with information about the waste can be found in DOE/RL-95-95 and WHC-SD-TP-SEP-042. Note that much of the documentation discusses shipping the items by truck, which was changed to rail shortly before they were shipped.

C.2.3.3.1 22.5 Ton Waste Containers

The containers shipped in the 22.5 Ton cask hold the dispersible 324 Facility hotcell waste. This waste consists of items such as dried melter feed and floor debris. An example is provided in Figure C-5.

Figure C-5. 324 Hotcell Floor Debris

This dispersible waste was packaged into Engineered Containers. The Engineered Containers are shown in Figure C-6 and Figure C-7; see H-3-308669 for more information.

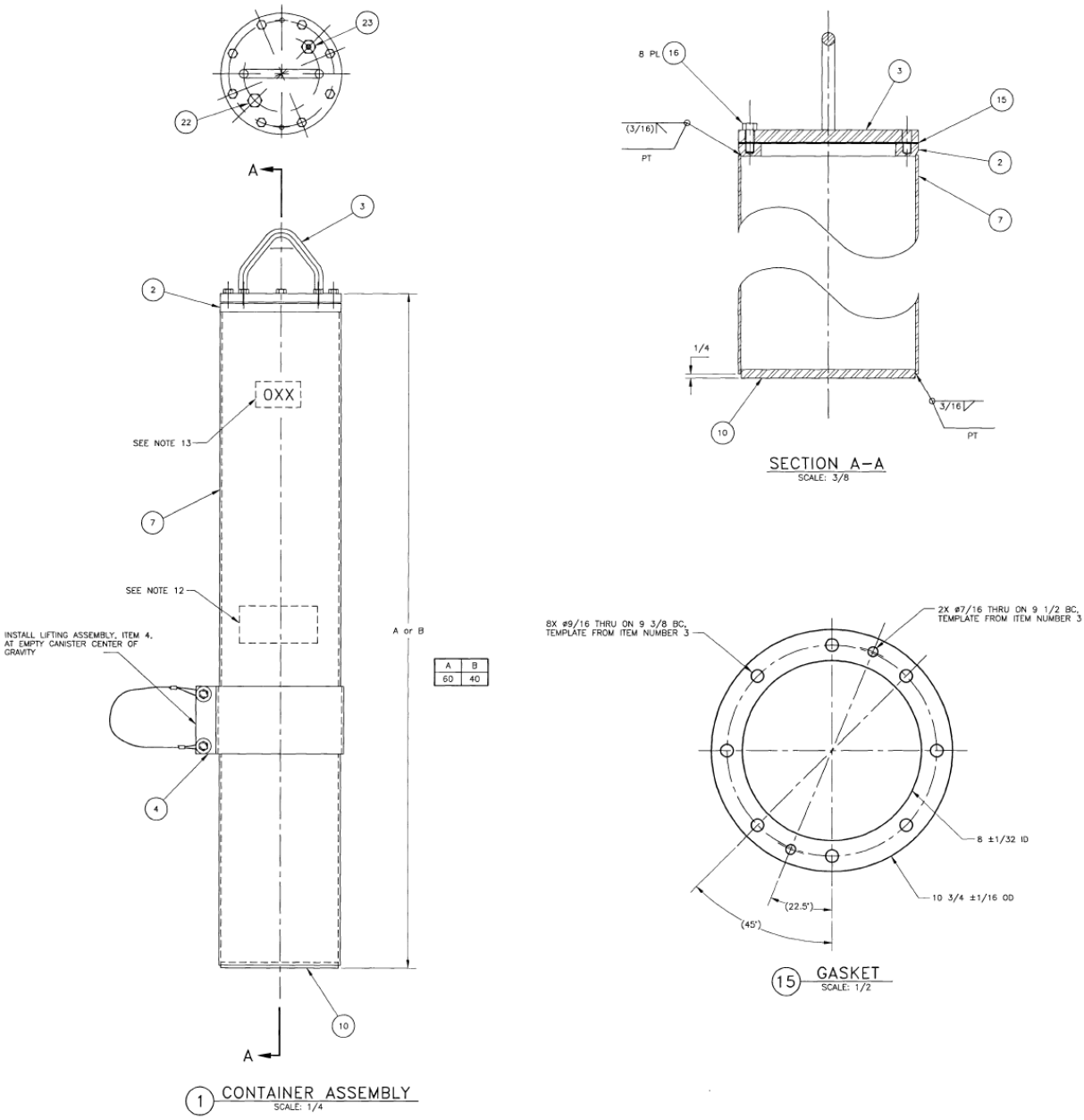

Figure C-6. Engineered Container Diagram

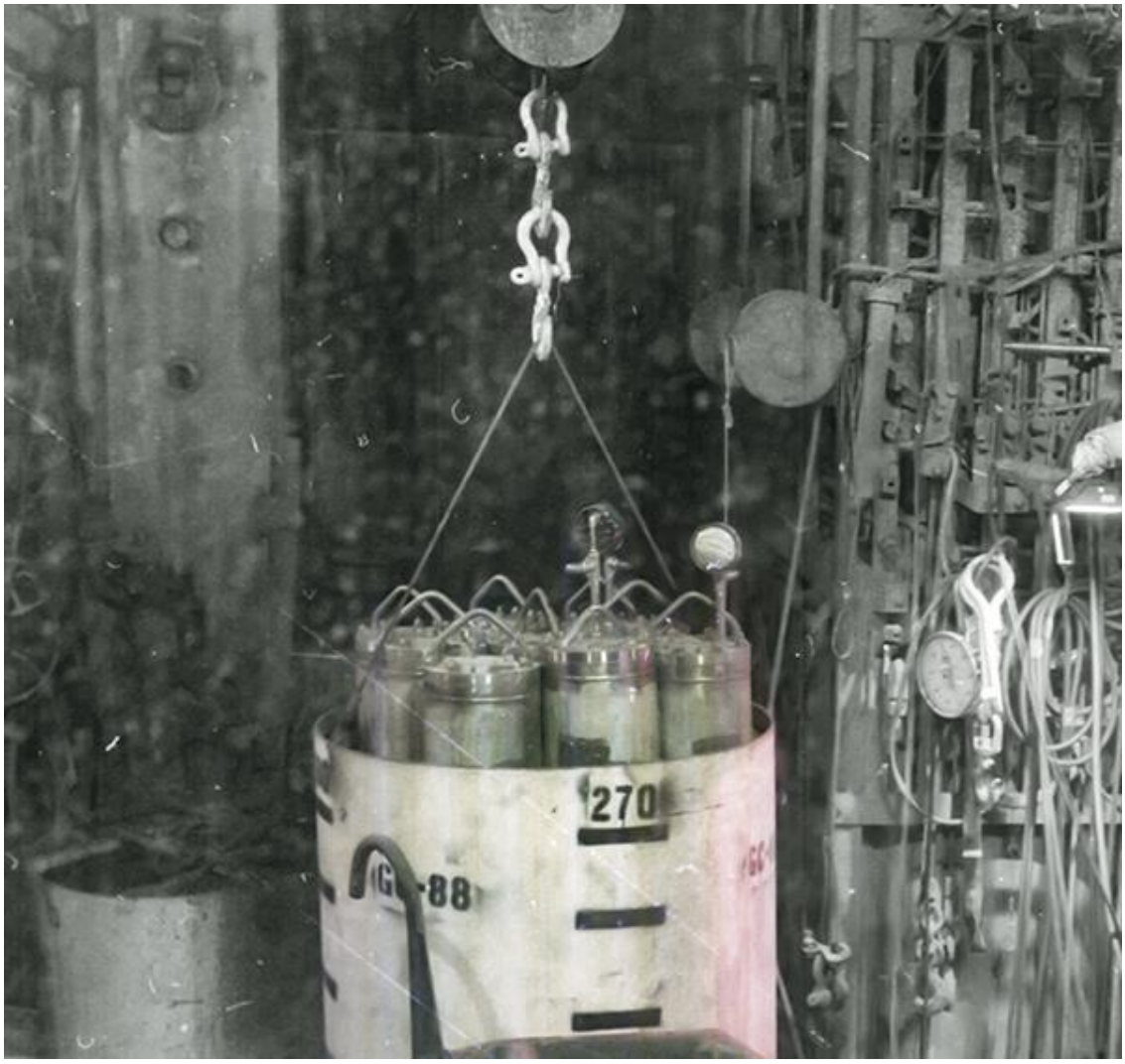

Figure C-7. Engineered Containers in 324 B-Cell

These Engineered Containers were then loaded into a Rectangular Overpack Disposal Container (RODC), which was shipped to PUREX in the 22.5 cask (H-3-70453). A drawing showing the configuration of the Engineered Containers within the RODC is shown in Figure C-8, and a photo of the RODC associated with manifest PNL-324-96-005, staged in PUREX G-Cell, is provided in Figure C-9.

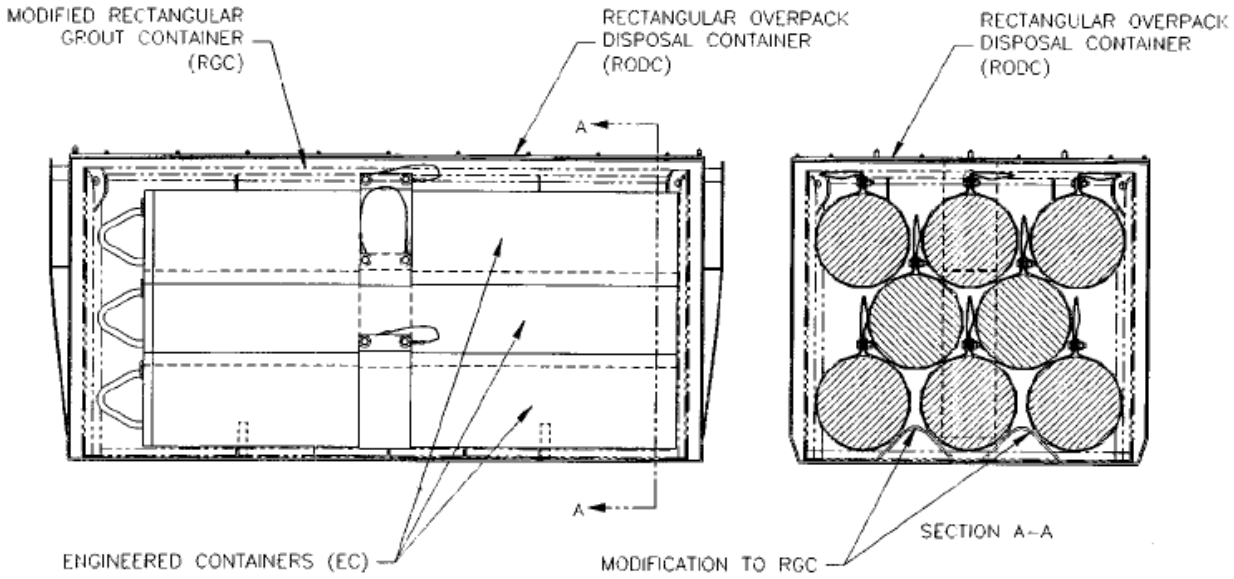

Figure C-8. Payload Configuration for Dispersible Waste

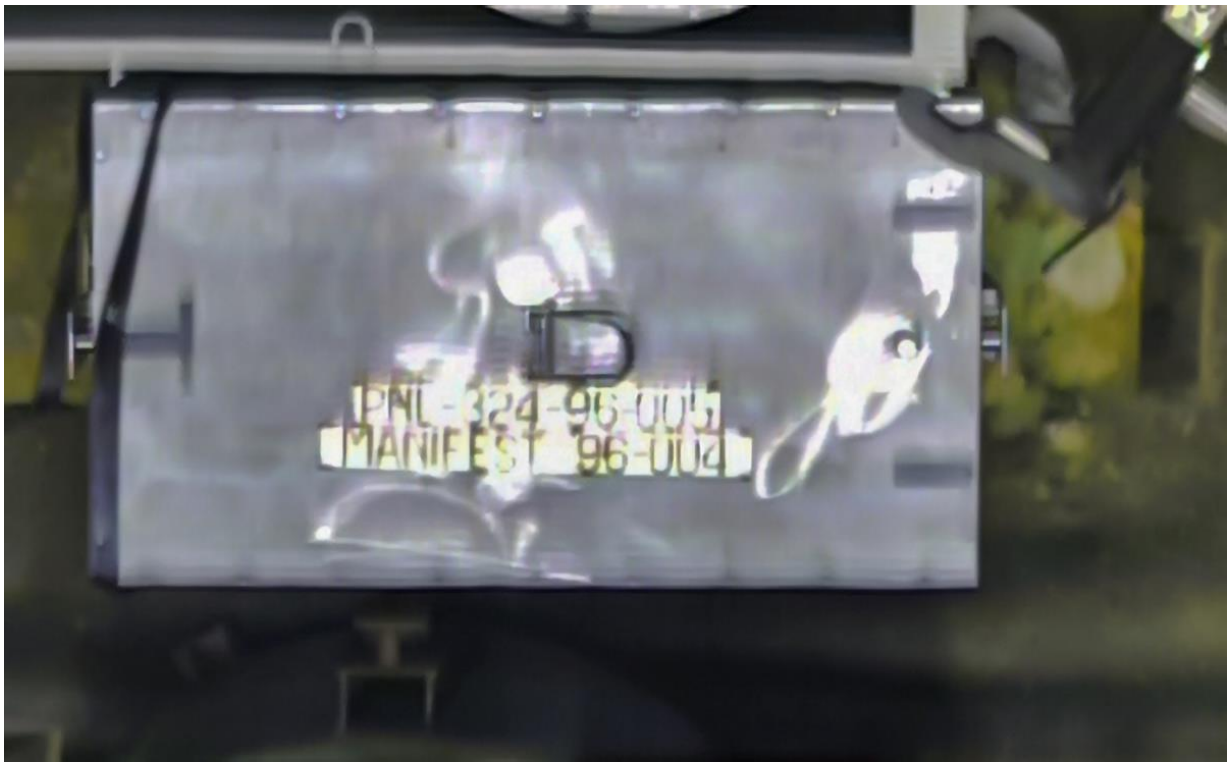

Figure C-9. RODC Staged in PUREX G-Cell

C.2.3.3.2 SEG Waste Containers

The containers shipped in the SEG cask liners contain the remainder of the 324 Facility waste. These items were loaded into grout containers shown in Figure C-10 (H-3-49415), grouted, placed in SEG cask liners shown in Figure C-11 and Figure C-12 (H-3-70273), and shipped to PUREX by rail in the SEG cask.

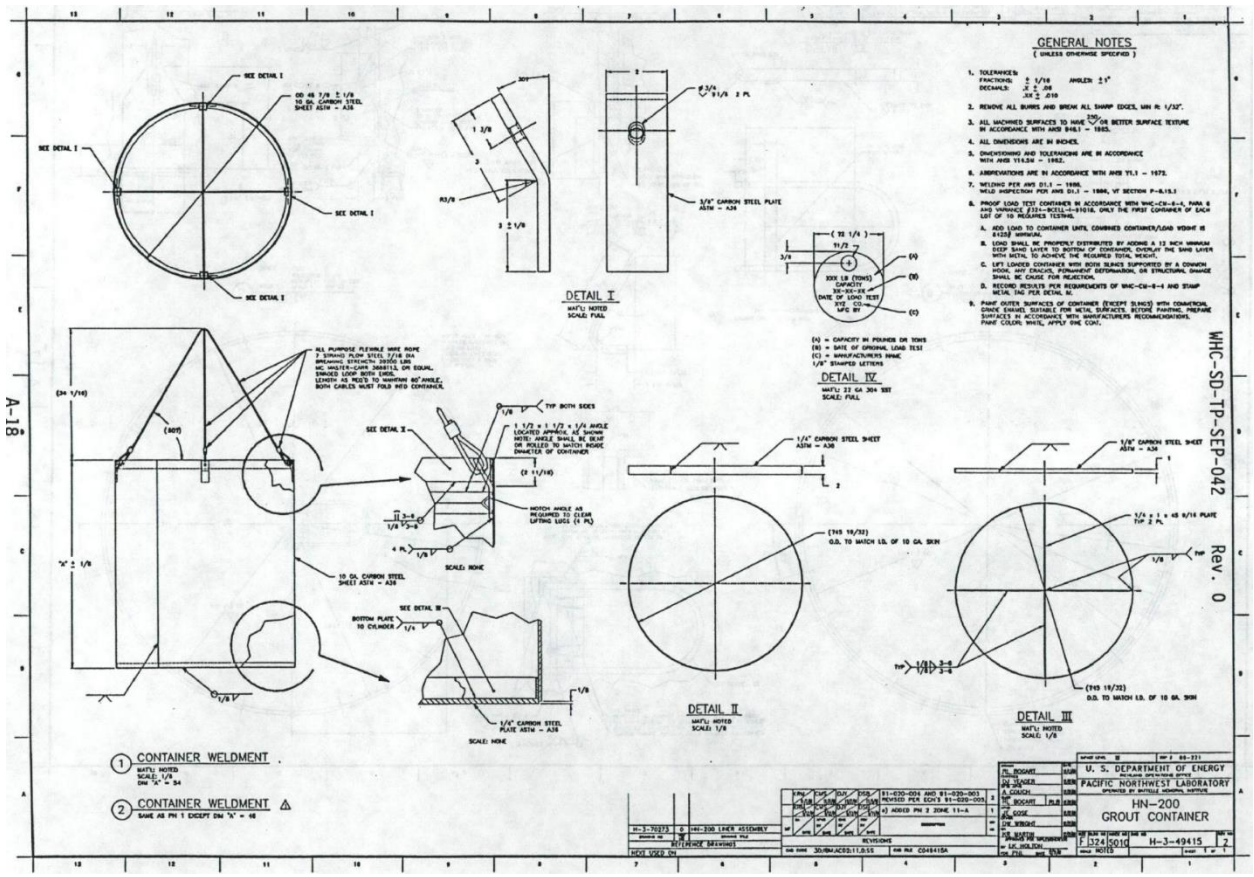

Figure C-10. Drawing of Grout Container

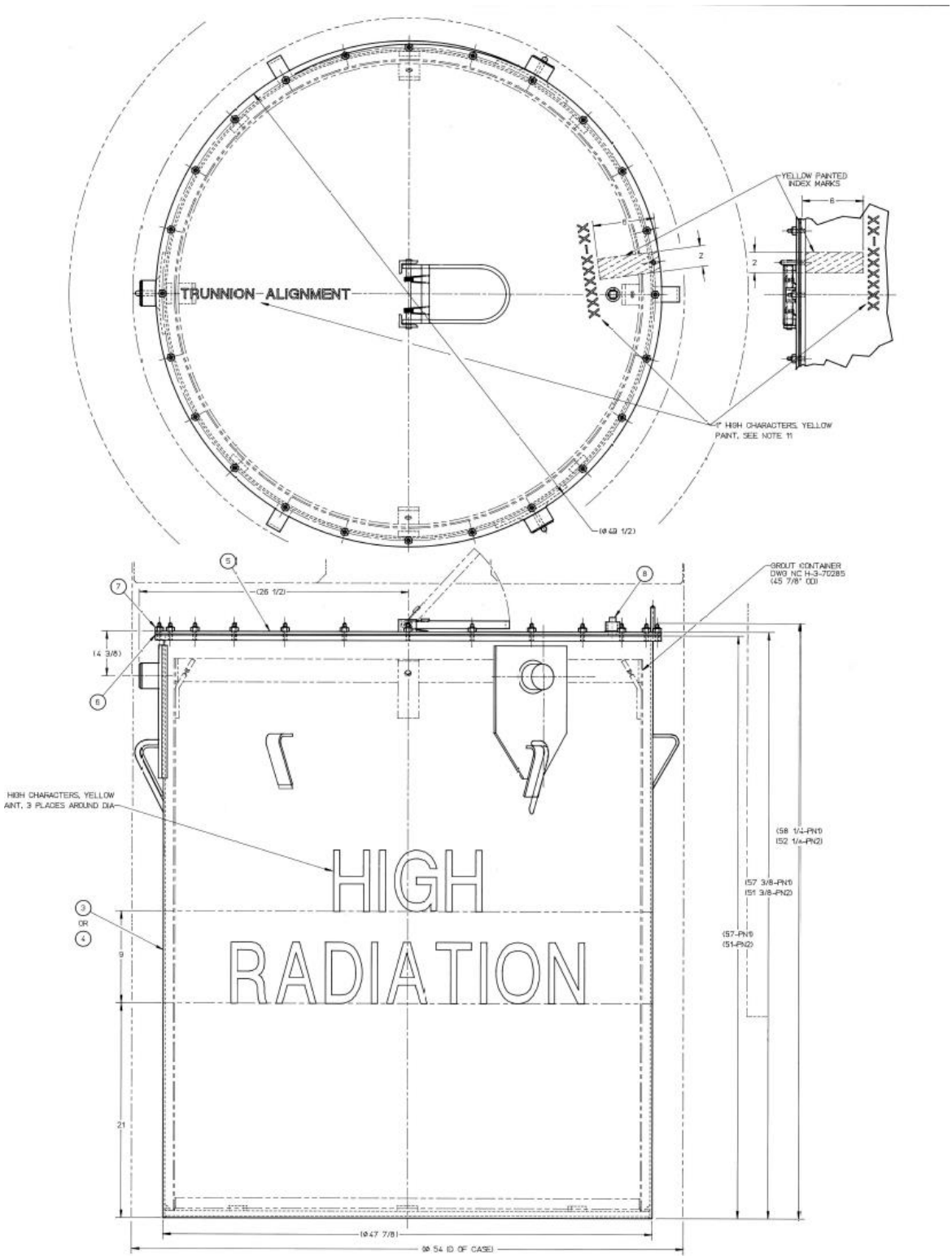

Figure C-11. Drawing of SEG Cask Liner

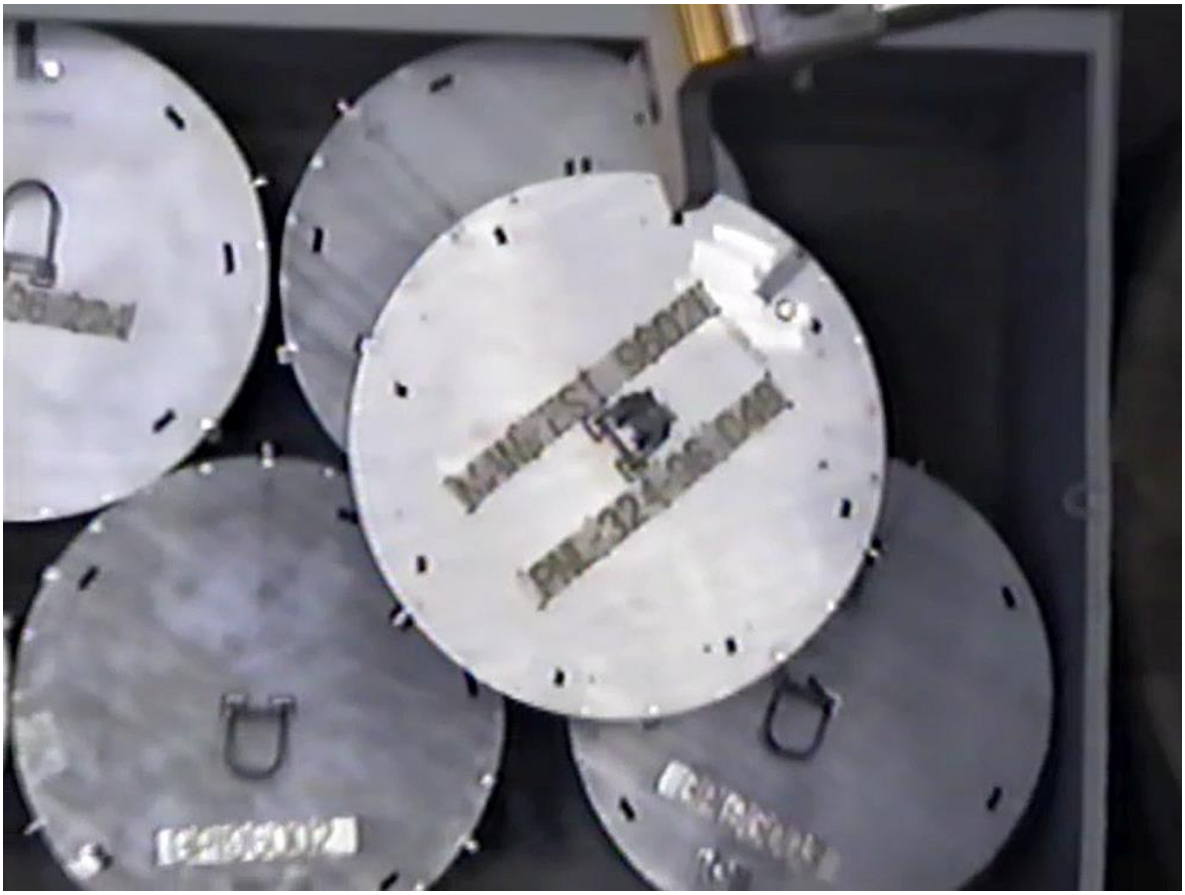

Figure C-12. SEG Cask Liner Packages Staged in G-Cell

C.2.3.3.3 Concrete Burial Boxes

Upon collection in the 202A canyon, the RODC holding the Engineered Containers and the SEG cask liners holding the grout containers were loaded into two concrete burial boxes (H-1-44908), and placed in Storage Tunnel 2 positions 24 and 25. Figure C-13 shows the loading plan for the burial box in position 24, Figure C-14 shows the loading plan for the burial box in position 25, and Figure C-15 is a photograph from inside the tunnel, showing both cars.

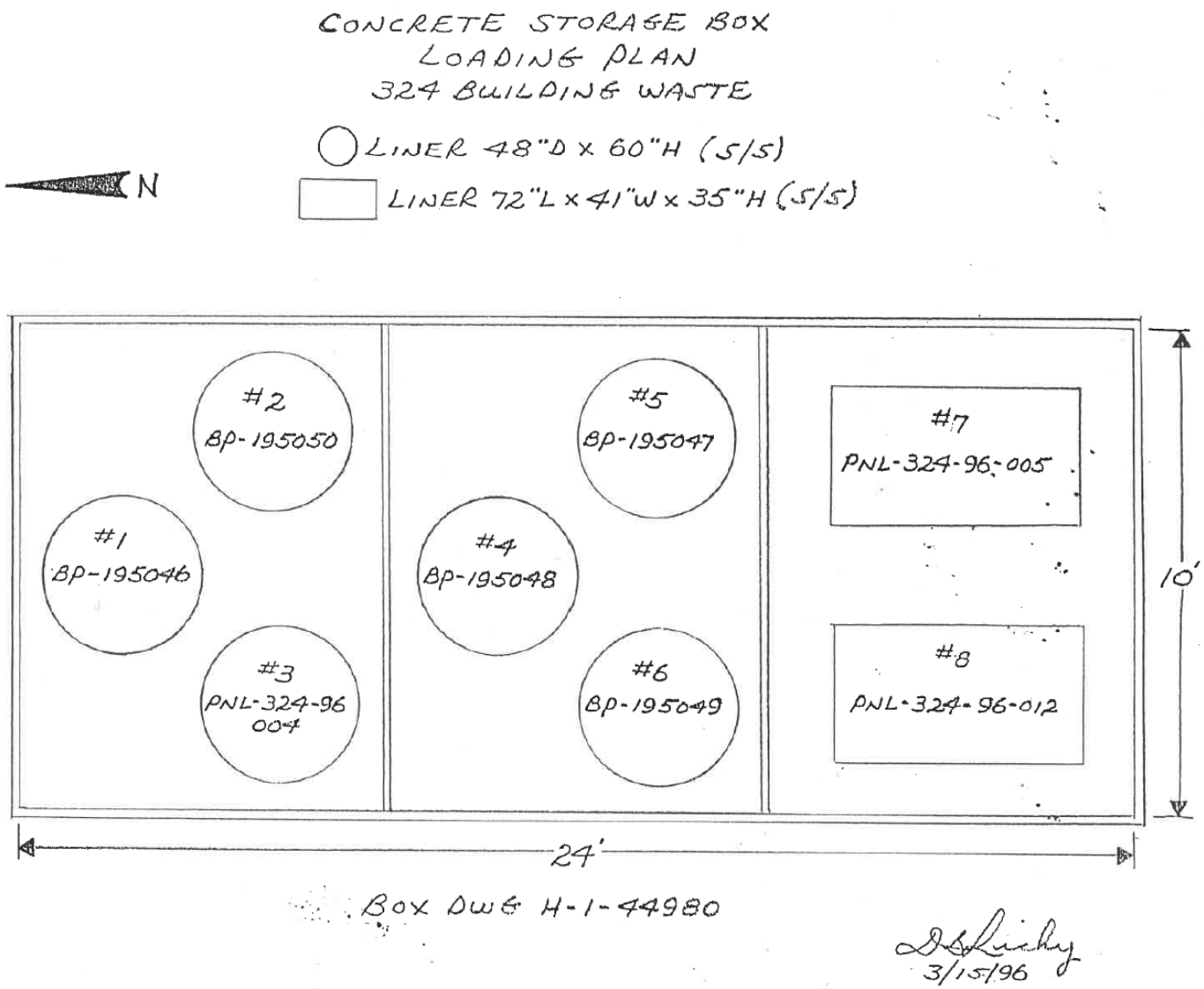

Figure C-13. Position 24 Loading Plan

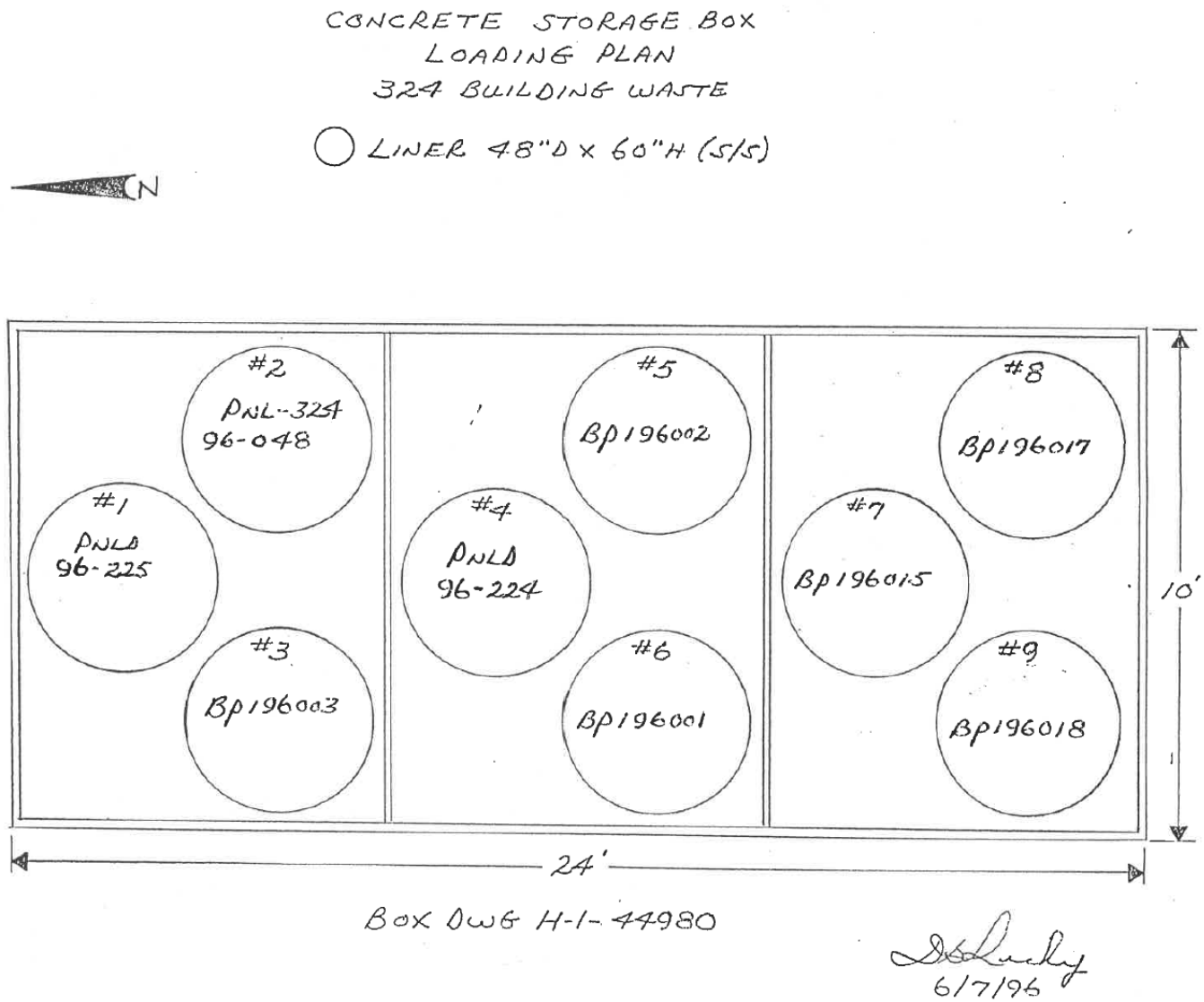

Figure C-14. Position 25 Loading Plan

Figure C-15. 324 Waste Items in Storage Tunnel 2

C.3 Hazardous Material Inventories

Table C-16 shows chemical hazards assumed to be located in the deactivated PUREX Facility. Residuals cited in 211A may also be encountered in 202A based on facility surveillances.

Table C-16. Chemical Hazards Material in Deactivated PUREX

Building/Area	Material	Inventory
202A	Lead	~40,000 lb solid or as shielding
	Silver	<750 lb
	Cadmium	283.8 lb
	Mercury	250.8 lb
Lab Annex	Lead	360 lb
203A	Residuals	None Identified
U-Cell	Asbestos	"Large amounts of friable"
211A	Residuals	Inventory may include: nitric acid, sulfuric acid; sodium hydroxide; potassium hydroxide; tributyl phosphate; normal paraffin hydrocarbon; AFAN and ANN
214A	Residuals	None Identified
221A	Residuals	None Identified
294A	Residuals	None Identified

Notes:

The basis for this table can be found in Appendix A of DOE/RL-98-35, *Surveillance and Maintenance Plan for the Plutonium-Uranium Extraction (PUREX) Facility*.

AFAN = ammonium fluoride ammonium nitrate

ANN = aluminum nitrate nonahydrate

Table C-17 provides a listing of the estimated and measured plutonium and mixed fission products at each location.

Table C-17. Radiological Inventory in Deactivated PUREX

Location	Measurable Pu		Estimated		Mixed Fission Products	
	Grams	Form	Grams	Form	Curies	Form
A-Cell	N/A	N/A	100 to 700	Dust, debris, sludge, spills	20 ^{90}Sr 30 ^{137}Cs	Debris, sludge, absorbed spills
B-Cell	N/A	N/A	100 to 700	Dust, debris, sludge, spills	20 ^{90}Sr 30 ^{137}Cs	Debris, sludge, absorbed spills
C-Cell	N/A	N/A	100 to 700	Dust, debris, sludge, spills	20 ^{90}Sr 30 ^{137}Cs	Debris, sludge, absorbed spills
D-Cell	N/A	N/A	300 to 1,200	Dust, debris, sludge, spills	20 ^{90}Sr 30 ^{137}Cs	Debris, sludge, absorbed spills
E-Cell—skip	400	Debris, sludge, spills	N/A	N/A	N/A	N/A
E-Cell (excluding skip)	N/A	N/A	200 to 800	Dust, debris, sludge, spills	20 ^{90}Sr 30 ^{137}Cs	Debris, sludge, absorbed spills
H-Cell	N/A	N/A	50 to 400	Dust, debris, sludge, spills	20 ^{90}Sr 30 ^{137}Cs	Debris, sludge, absorbed spills
J-Cell (J5A)	N/A	N/A	30 to 100	Dust, debris, sludge, spills	<0.1 ^{90}Sr <0.1 ^{137}Cs	Debris, sludge, absorbed spills
J-Cell (excluding J5A)	N/A	N/A	50 to 200	Dust, debris, sludge, spills	<0.1 ^{90}Sr <0.1 ^{137}Cs	Debris, sludge, absorbed spills
F-Cell	N/A	N/A	Negl	N/A	100 ^{90}Sr 100 ^{137}Cs	Debris, sludge, absorbed spills
G-Cell	N/A	N/A	Negl	N/A	0.1 to 1	Debris, sludge, absorbed spills
K-Cell	N/A	N/A	Negl	N/A	<0.1 ^{90}Sr 0.1 ^{137}Cs	Debris, sludge, absorbed spills
L-Cell	3,896	N/A	N/A	N/A	<0.1 ^{90}Sr <0.1 ^{137}Cs	Debris, sludge, absorbed spills
M-Cell	N/A	N/A	Negl	Decontamination work residues	0.1 to 1	Debris, sludge, absorbed spills
N-Cell	1,643	Fixed with PBS	N/A	N/A	N/A	N/A
PR Room	1,199	Fixed with PBS	N/A	N/A	N/A	N/A
Q-Cell	N/A	N/A	Negl	N/A	N/A	N/A
White Room	N/A	N/A	50 to 500	Pu fixed under multiple coats of paint	N/A	N/A
R-Cell	N/A	N/A	Negl	N/A	0.1 to 1	Debris, sludge, absorbed spills

Table C-17. Radiological Inventory in Deactivated PUREX

Location	Measurable Pu		Estimated		Mixed Fission Products	
	Grams	Form	Grams	Form	Curies	Form
Deep-bed Filter 1	N/A	N/A	100 to 200	Pu trapped in glass fiber matrix along with traces of TBP, dirt, debris, and ammonia nitrate	250,000 µCi ^{241}Am 20-200 Ci —Cs/Sr	^{241}Am trapped in fiber Cs/Sr trapped in fiber
Deep-bed Filter 2	N/A	N/A	100 to 200	Pu trapped in glass fiber matrix along with traces of TBP, dirt, debris, and ammonia nitrate	250,000 µCi ^{241}Am 20-200 Ci —Cs/Sr	^{241}Am trapped in fiber Cs/Sr trapped in fiber

Notes:

N/A = not applicable
Negl = negligible
PBS = polymer barrier system
TBP = tributyl phosphate

Table C-18 provides a more detailed evaluation of some key areas and equipment within the PUREX Facility. The values identified in Table C-18 were bounded by the values identified in Table C-17 and are provided here as additional information for use during S&M.

Table C-18. Detailed Residual Radiological Material in Deactivated PUREX

Location	Measurable Pu		Estimated		Mixed Fission Products	
	Grams	Form	Grams	Form	Curies	Form
M-Cell Vault	N/A	N/A	< 10	Sludge, process residuals	< 0.5	Process residuals
Slug Basin	N/A	N/A	< 1	Sludge, residual liquid	< 1	Liquid and solid phases
Sample Gallery Hoods	N/A	N/A	< 50	Process residuals, spills	< 100	Dirt, debris, process residuals
Sample Gallery Exhaust Duct	N/A	N/A	< 1	Process residuals	< 5	Dirt, debris, salts, process residuals
Canyon Vessels (Total)	N/A	N/A	120	Process residuals after flushing	< 1	Flushed vessels assuming no sludge
205A Silica Gel Facility	N/A	N/A	N/A	N/A	< 6 Ci beta[a]	Dust, debris, sludge, spills
206A Fractionator	N/A	N/A	< 1	Dirt, debris, process residuals	< 10	Dust, debris, sludge, spills
293A	N/A	N/A	< 1	Dirt, debris, process residuals	< 10	Dust, debris, sludge, spills
Tk-216-A2	N/A	N/A	< 1	Dirt, debris, process residuals	< 1	Dust, debris, sludge, spills
Tk-V11-1	N/A	N/A	< 1	Dirt, debris, process residuals	< 10	
Laboratory Hoods	N/A	N/A	< 0.1	Analytical residuals	< 1	Dust, debris, sludge, spills
Laboratory Pipe Chase	N/A	N/A	< 50	Residuals	< 1	

Notes:

For facilities not listed in this table, it is possible that residual contaminants may have remained in the facility following deactivation. However, this residual material is small in quantity and not readily dispersible

[a] Based on information contained in RHO-SD-DD-FL-001, *Rockwell Retired Facility Listing and Description*

N/A = not applicable

Figures C-16 and C-17 show the material stored in each storage tunnel location and the activity associated with it when it was placed in the tunnel.

PUREX STORAGE TUNNEL #1 (218-E-14)

TUNNEL IS AT CAPACITY AS OF 1/22/1965
TUNNEL IS GROUTED AS OF 11/16/2017

PUREX Storage Tunnel #1 is located at the southeast end of the PUREX Plant and is an extension of the railroad tunnel. The storage area is approximentely 109 meters long, 6.9 meters high, and 5.8 meters wide. The tracks have a 1 percent down-grade toward the south end of the tunnel. The capacity of the Storage Tunnel is 8 modified railroad cars, 12.8 meters long.

Position	
1. & 2.	CAR PLACED IN TUNNEL ON 6/60; HA COLUMN AND MISC. JUMPERS IN BOX (H-2-58372); HA COLUMN: 4,700 CU. FT.; 400 CURIES; JUMPERS: 2,190 CU. FT.; 2,000 CURIES; ~115 kg Pb; 5 rem/hr. @ 60'
3.	CAR PLACED IN TUNNEL ON 7/29/60; E-F11 (#1) (1WW WASTE) CONCENTRATOR; 1,900 CU. FT.; 40,000 CURIES; 12.5 rem/hr. @ 100'
4.	CAR PLACED IN TUNNEL ON 12/24/60; G-E2 CENTRUFUGE, 2 TUBE BUNDLES, MISC. JUMPERS; 2,465 CU. FT.; 3,000 CURIES; ~115 kg Pb; 1.5 rem/hr. @ 150'
5.	CAR PLACED IN TUNNEL ON 1/4/61; E-H4 (3WB) CONCENTRATOR; 2,336 CU. FT.; 1,000 CURIES; 0.15 rem/hr. @ 50'
6.	CAR PLACED IN TUNNEL ON 4/21/61; E-F6 (2WW WASTE) CONCENTRATOR; 2,336 CU. FT.; 700 CURIES; 5 rem/hr. @ 20'
7.	CAR PLACED IN TUNNEL ON 2/8/62; E-F11 (#2) (1WW WASTE) CONCENTRATOR; 2,336 CU. FT.; 40,000 CURIES; 25 rem/hr. @ 150'
8.	FLAT CAR 3621 PLACED IN TUNNEL ON 1/22/65; E-F6 (#3 SPARE) (2WW WASTE) CONCENTRATOR; 2,400 CU. FT.; 700 CURIES; 5 rem/hr. @ 20'

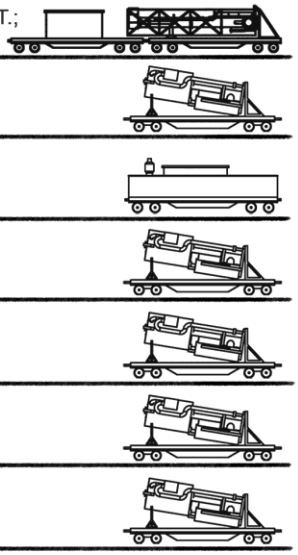

HNF-62216

Figure C-16. Stored Material in PUREX Storage Tunnel 1 (218-E-14)

PUREX STORAGE TUNNEL #2 (218-E-15)

PUREX Storage Tunnel #2 is located at the southeast end of the PUREX Plant and is an extension of the railroad tunnel. The storage area is approximately 514.5 meters long, 7.9 meters high and 10.4 meters wide. The tracks have a 0.1 percent down-grade toward the south end of the tunnel. The capacity of the Storage Tunnel is 38-40 modified railroad cars, 12.8 meters long. The Tunnel contains 28 cars as of 6/19/1996.

Position		
1.	CAR 61439 PLACED IN TUNNEL ON 12/12/67; E-F6 (2WW WASTE) CONCENTRATOR, TK-F15-2, TUBE BUNDLE, AGITATOR MOTORS; 2,400 CU. FT.; 700 CURIES; 1.3 rem/hr. @ 100'	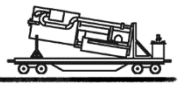
2.	CAR MILW 60883 PLACED IN TUNNEL ON 3/26/69; E-F6 (#5) CONCENTRATOR (PREVIOUSLY E-H4 3WB), 2 TUBE BUNDLES; 2,400 CU. FT.; 500 CURIES; 0.8 rem/hr. @ 2'	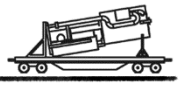
3.	CAR 3612 PLACED IN TUNNEL ON 3/19/70; E-F6 (#6) (2WW WASTE) CONCENTRATOR, 2 TUBE BUNDLES; 2,400 CU. FT.; 700 CURIES; 0.5 rem/hr. @ 2'	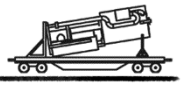
4.	CAR MILW 60033 PLACED IN TUNNEL ON 12/30/70; L-CELL PACKAGE IN A SEALED STEEL BOX (H-2-66092); 2,400 CU. FT.; 500 g Pu; 0.2 rem/hr. @ CONTACT	
5.	GONDOLA CAR 4610 PLACED IN TUNNEL ON 2/26/71; T-F2 SILVER REACTOR, T-F6 DEMISTER, VESSEL VENT LINE, STEEL CATWALK AND GUARD RAILS; 2,400 CU. FT.; 20 CURIES; ~625 kg Ag; 2 rem/hr. @ CONTACT	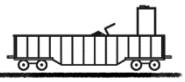
6.	GONDOLA CAR 4611 PLACED IN TUNNEL ON 12/12/71; MODIFIED T-A3-1 TOWER, SCRUBBER, LID, VAPOR LINE; 2,400 CU. FT.; 10 CURIES; 1 rem/hr. @ CONTACT	
7.	CAR B58 (9' SHORTENED) PLACED IN TUNNEL ON 12/22/71; TK-A3 ANNULAR DISSOLVER; 2,400 CU. FT.; 50 CURIES; ~45 kg Hg; 5 rem/hr. @ 5'	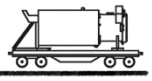
8.	CAR 19808 PLACED IN TUNNEL ON 8/29/72; A1W1 FUEL ENDS IN STEEL LINER BOX AND NPR FUEL HANDLING EQPT. USED WITH SUSPECTED CANISTERS; 800 CU. FT.; 17,500 CURIES; 10 rem/hr. @ 150'	
9.	CAR 19811 PLACED IN TUNNEL ON 9/30/72; TK-C3 ANNULAR DISSOLVER; 1,590 CU. FT.; 50 CURIES; ~45 kg Hg; 5 rem/hr. @ 5'	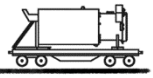
10.	CAR CDX-1 PLACED IN TUNNEL ON 8/30/83; E-H4 (3WB) CONCENTRATOR, TUBE BUNDLE, PROTOTYPE COOLING COIL, F-F1 FILTER TANK; 2,400 CU. FT.; 500 CURIES; 0.8 rem/hr. @ 2'	
11.	CAR 3613 PLACED IN TUNNEL ON 1/18/86; TK-A3 ANNULAR DISSOLVER (#10) AND E-A2 HEATER (#6); 3,960 CU. FT.; 0.81 CURIES; ~40 kg Hg; ~43 kg Cd; 3 mrem/hr. @ 3'	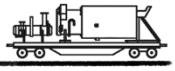
12.	CAR 3611 PLACED IN TUNNEL ON 1/20/86; WHITE BOX (H-2-58456) CONTAINING 8 TUBE BUNDLES, PG-J6 PULSE GENERATOR (#5), DISSOLVER LID, 9 DUMPING TRUNNIONS; 5,438 CU. FT.; 540 CURIES, 2 rem/hr. @ 3'	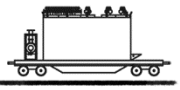

HNF-62216

Figure C-17. Stored Material in PUREX Storage Tunnel 2 (218-E-15)

PUREX STORAGE TUNNEL #2 (218-E-15)

Position	
13.	CAR 19806 PLACED IN TUNNEL ON 1/21/86; TK-J5 2A FEED TANK (#30), E-F1 CONDENSER (#13), F12-B CELL BLOCK, DISSOLVER 4-WAY DUMPER, DISSOLVER YOKE, FLANGE PLATE; 2,500 CU. FT.; 90 CURIES; 3 rem/hr. @ 1'
14.	CAR PX-10 PLACED IN TUNNEL ON 11/18/87; L-1 PULSER, 2 COLUMN CARTRIDGES, JUMPER CUTTER, STORAGE RACK, 3 JUMPER ALIGNMENT TOOLS, 9 EXTERIOR DUMPING TRUNNIONS, 10 PUMPS, 3 AGITATORS, 4 TUBE BUNDLES, 2 VENT JUMPERS, 7 YOKES; 50 TONS; 3,600 CU. FT.; 33,740 CURIES; 2,540 kg Pb; 5 rem/hr. @ 15' (REF: LETTER 12110-88-074)
15.	CAR PX-9 PLACED IN TUNNEL ON 5/13/88; T-A2 SILVER REACTOR (#5 SPARE), S/R CRADLE, E-F2 STEAM HEATER, STORAGE LINER (H-2-65095) FILLED WITH CUT UP JUMPERS; 20 TONS; 2,775 CU. FT.; 240 CURIES; ~13 kg Cd; ~115 kg Ag; ~230 kg Pb; 20 mrem/hr. @ 20' (REF: LETTER 12110-88-074)
16.	CAR PX-6 (H-2-99608) PLACED IN TUNNEL ON 4/6/89; E-J8-1 UNITIZED CONCENTRATOR (#1) (H-2-52477); ESTIMATED 42 TONS; 6,000 CU. FT.; 1.5 CURIES; 0.5 mrem/hr. @ 10' (REF: LETTER 12113-89-027)
17.	CAR PX-19 PLACED IN TUNNEL ON 8/5/89; NORTH STORAGE LINER (H-2-65095) CONTAINING 6 PUMPS, AN AGITATOR AND CUT UP JUMPERS (14 TONS). SOUTH STORAGE LINER (H-2-65095) CONTAINING A PUMP, #15 YOKE, AND CUT UP JUMPERS (11.5 TONS); ESTIMATED 25.5 TONS; 2,574 CU. FT.; 3.0 CURIES; 80 mrem/hr. @ 1' (REF: LETTER 12113-89-051)
18.	CAR PX-2 PLACED IN TUNNEL ON 4/8/94; T-F5 ACID ABSORBER (H-2-52535, H-2-52487, H-2-52488); ESTIMATED 22 TONS; 835 CU. FT.; 185 CURIES; 80 mrem/hr. @ CONTACT
19.	CAR PX-23 PLACED IN TUNNEL ON 9/16/94; 4 METAL LINER STORAGE BOXES (H-2-65095) (H-2-100187) CONTAINING FAILED JUMPERS AND MISC. OBSOLETE CANYON EQUIPMENT; ESTIMATED 60 TONS; 4,032 CU. FT.; 927 CURIES; 30 mrem/hr. @ 2'
20.	CAR PX-28 PLACED IN TUNNEL ON 1/27/95; E-H4-1 UNITIZED CONCENTRATOR (H-2-52477) (H-2-56213); ESTIMATED 40 TONS; 5,760 CU. FT.; 3,070 CURIES; ~8 kg Cr; 1 rem/hr. @ 5'
21.	CAR PX-3609 PLACED IN TUNNEL ON 2/8/95; H4 CONCENTRATOR TOWER (H-2-58102), TK-E5 (H-2-52453), LEAD STORAGE BOX (H-2-131629), HOT SHOP "Q" COVER PLATE (H-2-52222), TUBE BUNDLE WASH CAPSULE (H-2-58647), DISSOLVER CHARGING INSERT (H-2-75875), LIFTING YOKE #7A (H-2-96837), LIFTING YOKE #9 (H-2-52458); ESTIMATED 44 TONS; 3,457 CU. FT.; 26,000 CURIES. ~1,930 kg Pb; 1 rem/hr. @ 4'

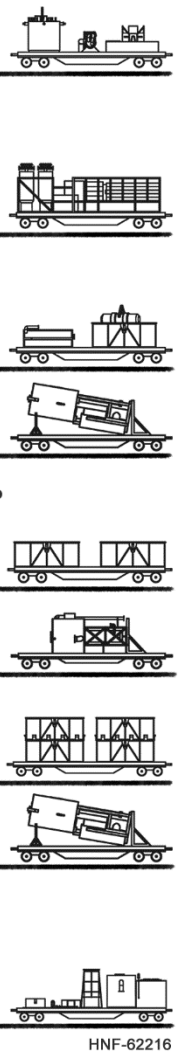

Figure C-17. Stored Material in PUREX Storage Tunnel 2 (218-E-15) Cont'd

PUREX STORAGE TUNNEL #2 (218-E-15)

Position		
22.	CAR 3616 PLACED IN TUNNEL ON 3/11/96; METAL LINER BOX (H-2-65095) CONTAINING JUMPERS AND FAILED/ OBSOLETE CANYON EQUIPMENT, F7 NEUTRON MONITOR (H-2-75825), LEAD STORAGE BOX (H-2-131629) CONTAINING JUMPER COUNTERWEIGHTS AND MISC. LEAD ITEMS, SCRAP HOPPER (H-2-57347) CONTAINING MISC. CANYON EQUIPMENT, CANISTER CAPPING STATION (H-2-821831), TEST CANISTER CONTAINING VARIOUS LENGTHS OF CARBON STEEL PIPE; ESTIMATED 22 TONS; 1,712 CU. FT.; 15 CURIES; ~3,232 kg Pb; ~2 kg Cd; 0.1 rem/hr. @ 1'	
23.	CAR PX-31 PLACED IN TUNNEL ON 3/11/96; 2 BURIAL BOXES (H-2-100187) CONTAINING JUMPERS AND FAILED/OBSOLETE CANYON EQUIPMENT. LIFTING YOKE (H-2-99652); ESTIMATED 21 TONS; 2,116 CU. FT.; 2 CURIES; 10 mrem/hr. @ 1'	
24.	CAR PX-29 PLACED IN TUNNEL ON 4/26/96; CONCRETE BURIAL BOX (H-1-44980) STORING 8 CONTAINERS OF 324 BUILDING B-CELL WASTE; ESTIMATED 36 TONS; 1,890 CU. FT.; <244,000 CURIES; ~1,802 kg Pb; ~10.5 kg Cd; ~8.5 kg ABSORBED OIL; ~1 kg Cr; ~3 kg Ba; ~24 g Pu; ~15 mrem/hr. @ 150' (FOR DETAILS SEE PUREX WORK PLAN WP-P-95-60)	
25.	CAR 10A-3619 PLACED IN TUNNEL ON 6/12/96; CONCRETE BURIAL BOX (H-1-44980) STORING 9 CONTAINERS OF 324 AND 325 BUILDING HOT CELL WASTE; ESTIMATED 46.5 TONS; 1,890 CU. FT.; <1,750,000 CURIES; <1 g Pb; < 1 g Cd; ~2 g Cr; ~4 g Ba; ~43 g Pu; ~0.2 rem/hr. @ 150' (FOR DETAILS SEE PUREX WORK PLAN WP-P-96-015)	
26.	CAR HO-10H-18582 PLACED IN TUNNEL ON 6/19/96; 20,000-GALLON LIQUID WASTE TANK CAR (LWTC); EMPTY PER RCRA; ESTIMATED 30 TONS; 23 CURIES; ~11 g Pu; 0.65 rem/hr. @ 3'	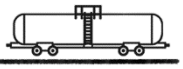
27.	CAR HO-10H-18579 PLACED IN TUNNEL ON 6/19/96; 20,000-GALLON LIQUID WASTE TANK CAR (LWTC); EMPTY PER RCRA; ESTIMATED 30 TONS; 9 CURIES; ~131 g Pu; 0.3 rem/hr. @ 3'	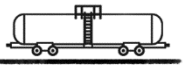
28.	CAR HO-10H-18580 PLACED IN TUNNEL ON 6/19/96; 20,000-GALLON LIQUID WASTE TANK CAR (LWTC); EMPTY PER RCRA; ESTIMATED 30 TONS; 5 CURIES; ~53 g Pu; 0.1 rem/hr. @ 3'	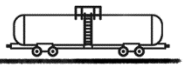

HNF-62216

Figure C-17. Stored Material in PUREX Storage Tunnel 2 (218-E-15) Cont'd

C.4 References

2004, *Nuclides and Isotopes, Chart of Nuclides*, Rev 16, Knolls Atomic Power Laboratory, Schenectady, New York.

CHPRC-03519, 2017, *PUREX Tunnel 1 Stabilization Specification*, Rev 1, CH2M HILL Plateau Remediation Company, Richland, Washington.

DAH-8M400-95-015, 1995, *Radiological Consequence Analysis of a Hypothetical Release from PUREX Storage Tunnel No. 2 Associated with Interim Storage of Material from 324 Building*, Westinghouse Hanford Company, Richland, Washington.

DOE-HDBK-3010-94, 2000, *Airborne Release Fractions/Rates and Respirable Fractions for Nonreactor Nuclear Facilities*, Change Notice No. 1, U.S. Department of Energy, Washington, D.C.

DOE/RL-95-95, 1995, *Radioactive Air Emissions Notice of Construction Transfer and Receipt of Waste in the 324 Building for Storage in PUREX Storage Tunnel Number 2*, U.S. Department of Energy, Richland Operations Office, Richland, Washington.

DOE/RL-98-35, 2008, *Surveillance and Maintenance Plan for the Plutonium-Uranium Extraction (PUREX) Facility*, Rev. 3, U.S. Department of Energy, Richland Operations Office, Richland, Washington.

H-1-44980, 1983, *Concrete Burial Box for N-Reactor Fuel Spacers*, Rev. 1, United Nuclear Industries Inc., Richland, Washington.

H-3-49415, 1991, *HN-200 Grout Container*, Rev. 2, Pacific Northwest Laboratory, Richland, Washington.

H-3-70273, 1995, *HN-200 / 3-82 B Liner Assembly*, Rev. 3, Pacific Northwest Laboratory, Richland, Washington.

H-3-70453, 1992, Rectangular Overpack Disposal Container, Rev. 0, Pacific Northwest Laboratory, Richland, Washington.

H-3-308669, 2001, *Engineered Container Assembly*, Rev 1, Fluor Hanford, Inc., Richland, Washington.

HNF-2545, 1998, *Plutonium-Uranium Extraction Facility (PUREX) Plutonium and Fission Product Residual Estimates*, Rev. 0, B&W Hanford Company, Richland, Washington.

HNF-EP-0063, *Hanford Site Solid Waste Acceptance Criteria*, as amended, CH2M HILL Plateau Remediation Company, Richland, Washington

HNF-SD-CP-HIE-002, 1997, *Plutonium-Uranium Extraction (PUREX) Facility Storage Tunnel Hazard Analysis*, Rev. 0, B&W Hanford Company, Richland, Washington.

ICRP 68, 1994, *Dose Coefficients for Intakes of Radionuclides by Workers*, International Commission on Radiological Protection, Elsevier Ltd., Tarrytown, New York.

PNL-324-96-005, 1996, Solid Waste Storage/Disposal Record, Pacific Northwest National Laboratory, Richland, Washington.

PNL-324-96-012, 1996, Solid Waste Storage/Disposal Record, Pacific Northwest National Laboratory, Richland, Washington.

RHO-SD-DD-FL-001, 1982, *Rockwell Retired Facility Listing and Description*, Rockwell Hanford Operations, Richland, Washington.

SD-HS-SAR-001, 1986, *PUREX Final Safety Analysis Report*, Westinghouse Hanford Company, Richland, Washington.

WHC-SD-TP-SEP-042, 1996, *Scientific Ecology Group, Inc., 3-82B Cask Safety Evaluation for Packaging*, Rev 0, Westinghouse Hanford Company, Richland, Washington.

Appendix D

Technical Safety Requirements for PUREX Facility

Contents

D.1 Use and Applications D-3
D.1.1 Acronyms D-3
D.1.2 Definitions D-4
D.1.3 Logical Connectors D-6
D.1.4 Operational Modes D-7
D.1.5 Completion Time D-7
D.1.6 Alternate Emergency Actions D-8
D.1.7 AC Element Not Met D-8
D.1.8 TSR AC Violations D-9
D.1.9 General Principles of Operability D-9

D.2 Safety Limits D-9

D.3 Limiting Conditions of Operations D-9

D.4 Operating Limits and Surveillance Requirements D-9

D.5 Administrative Technical Safety Requirements D-9
D.5.1 Safety Management Programs (AC) D-10
D.5.1.1 Applicability D-10
D.5.1.2 Requirements D-10
D.5.1.3 Responsibility D-11
D.5.1.4 Recovery D-11
D.5.1.5 Basis D-11
D.5.2 Material Management (SAC) D-11
D.5.2.1 Applicability D-11
D.5.2.2 Critical Safety Function D-12
D.5.2.3 Basis D-13
D.5.3 Nuclear Criticality Safety (AC) D-14

D.6 Design Features D-15

D.7 References D-16

Tables

Table D-1. Criteria Constituting TSR AC VIOLATIONS D-8
Table D-2. PUREX TRU Waste Inventory Limits D-12
Table D-3. PUREX Waste Isotope Mixture D-14

Appendix D
Technical Safety Requirements for PUREX Facility

D.1 Use and Applications

This section contains basic information and instructions for using and applying the Technical Safety Requirements (TSRs) and complies with the relevant sections of 10 CFR 830, "Nuclear Safety Management," as implemented by CH2M HILL Plateau Remediation Company (CHPRC) agreements and procedures.

D.1.1 Acronyms

AC	ADMINISTRATIVE CONTROL
CHPRC	CH2M HILL Plateau Remediation Company
CPS	Criticality Prevention Specification
DOE	U.S. Department of Energy
DSA	Documented Safety Analysis
ERDF	Environmental Restoration Disposal Facility
LCO	Limiting Condition for Operation
LLMW	low-level mixed waste
LLW	low-level waste
MAR	material at risk
PUREX	Plutonium-Uranium Extraction
RL	Richland Operations Office
RO/RO	roll-on/roll-off
S&M	surveillance and maintenance
SAC	Specific Administrative Control
SL	SAFETY LIMIT
SMP	Safety Management Program
TRU	transuranic
TSR	Technical Safety Requirement
USQ	Unreviewed Safety Question

D.1.2 Definitions

Note: Defined terms in this list appear in uppercase type throughout these TSRs.

Term	Definition
ACTION	An ACTION statement describes the action or actions to be taken in the event a SAC element is not met. ACTION statements should be broken down, whenever possible, into separate statements describing a single deviated condition requiring operator action
ACTIVITY	An ACTIVITY is the term representing the collection of tasks or steps commonly associated with a process
ADMINISTRATIVE CONTROLS (ACs)	Provisions relating to organization and management, procedures, record keeping, assessment, and reporting necessary to ensure safe operation of a facility
DESIGN FEATURE	DESIGN FEATURES of the facility specified in the TSRs that, if altered or modified, would have a significant effect on safety operation
COMPLETION TIME	The amount of time allowed to complete an ACTION.
IMMEDIATE/ IMMEDIATELY	Term used as a completion time when a step is to be initiated as soon as possibly achievable after discovery without creating a less stable condition and continuously and aggressively pursued until complete
LIMITING CONDITION FOR OPERATION (LCO)	The lowest functional capability or performance levels of essential safety-related hardware
OPERABLE/ INOPERABLE/ OPERABILITY	A system, subsystem, train, component, or device SHALL be operable or have OPERABILITY when it is capable of performing its specified function(s), and when all necessary attendant instrumentation, controls, electrical power, cooling or seal water, lubrication, or other auxiliary equipment that are required for the system, subsystem, train, component, or device to perform its function(s) are also capable of performing their related support function(s). See Section D.1.9, "General Principles of OPERABILITY."
OPERATIONAL MODES	OPERATIONAL MODE for the Plutonium-Uranium Extraction (PUREX) Facility is S&M MODE. See Section D.1.4, "OPERATIONAL MODES."

Term	Definition
SHALL	Denotes a mandatory requirement that must be complied with to maintain the requirements, assumptions, or conditions of the facility safety basis.
SPECIFIC ADMINISTRATIVE CONTROL (SAC)	An administrative control (AC) that provides a specific preventative or mitigative function for accident scenarios identified in the Documented Safety Analysis (DSA) where the safety function has importance similar to, or the same as, the safety function of a safety SSC (e.g., discrete operator actions, combustible loading program limits, hazardous material limits protecting hazard analyses or facility categorization)
SURVEILLANCE REQUIREMENT	Requirements related to testing, calibration, or inspection to ensure OPERABILITY of safety-related equipment and required support systems, or to ensure that operations are within the specified LCO.
TIME OF DECLARATION	The actual time when the facility manager or designee declares that a SAC or AC element is not met. As soon as possible upon notification of a problem, the problem should be evaluated and a declaration made by the facility manager or his designee if it is determined that a SAC or AC element is not met. Time specified for completion of ACTION is measured from the TIME OF DECLARATION unless otherwise specified within the ACTION Statement.
VIOLATION	See Section D.1.8, “TSR AC VIOLATION.”

D.1.3 Logical Connectors

PURPOSE

The purpose of this section is to explain the use and application of logical connectors.

BACKGROUND

Logical connectors are used in TSRs to discriminate between (and yet connect) discrete conditions, ACTIONS, COMPLETION TIMES, SRs, and FREQUENCIES. The logical connectors include the "**AND**" and **"OR.**" The physical arrangement of this connector on a page constitutes a specific meaning in accordance with the convention established in DOE G 423.1-1A.

USE OF LOGICAL CONNECTORS

Several levels of logic may be used to state ACTIONS. These levels are identified by the placement (or nesting) of the logical connectors and by the number assigned to each ACTION. The first level of logic is identified by the first digit of the number assigned to an ACTION and the placement of the logical connector in the first level of nesting (e.g., left-justified with the number of the ACTION). The successive levels of logic are identified by additional digits of the ACTION number and by successive indenting of the logical connectors.

When logical connectors are used to state a condition, usually only the first level of logic is used and the logical connector is left justified with the condition statement. For cases where successive levels of logic are used, the lower level is identified solely by indenting the logical connector because subparts of a condition statement are not numbered separately.

DEFINITION OF LOGIC TERMS

The defined terms of this section appear in capitalized type, bolded, and underlined throughout the TSR document. ACTION statements are read top to bottom (e.g., a, b, c, d, etc.). A more detailed definition for logic connector interpretations for each TSR can be found in the Bases.

Term	Definition
AND	Used to connect two or more sets of criteria that must both (all) be satisfied for a given logical decision.
OR	Used to denote alternate combinations or conditions, meaning either one or the other criterion will satisfy a given logical decision.

D.1.4 Operational Modes

The operational conditions and modes that apply to the PUREX Facility and its operations are defined as follows:

Term	Definition
S&M MODE	Surveillance and maintenance (S&M) activities are performed. (See Section 2.3)

D.1.5 Completion Time

PURPOSE	The purpose of this section is to explain the use and application of COMPLETION TIMES.
BACKGROUND	The SPECIFIC ADMINISTRATIVE CONTROL conditions for which functional or performance requirements are not met, and the ACTION(s) that may be taken within a limited time (the COMPLETION TIME) or within a specified periodicity under these conditions. The ACTION statements provide interim remedial ACTION(s) or compensatory protection for the same safety concerns as the SAC while attempting to restore the functional capabilities or performance levels required by the SAC.
USE OF COMPLETION TIME	The COMPLETION TIME is the amount of time allowed to complete an ACTION. It is referenced to the TIME OF DECLARATION. If situations require entry into more than one condition within a single LCO or SAC ACTION (multiple conditions), the ACTION(s) for each condition SHALL be performed within the associated COMPLETION TIMES. When in multiple conditions, separate COMPLETION TIMES are tracked for each condition, starting from the TIME OF DECLARATION of the situation that required entry into the condition. Once a condition has been entered, subsequent discovery of subsystems, components, or variables that are inoperable or not within limits as a result of cascading effects from entering the condition SHALL NOT result in separate entry into the condition. The ACTION(s) of the condition continue to apply to each additional failure, and COMPLETION TIMES are based on initial entry into the condition. Entry into a SAC ACTION and SAC ACTION COMPLETION TIMES SHALL be documented.

D.1.6 Alternate Emergency Actions

Emergency actions may be taken in special circumstances. In an emergency, if a situation develops that is not addressed by the TSR, staff members are expected to use their training, expertise, and applicable emergency response procedures to take actions to correct or mitigate the situation. Also, staff may take actions that depart from a requirement in the TSR provided that the following conditions apply:

- An emergency situation exists
- These actions are needed IMMEDIATELY to protect the public health and safety
- No action consistent with the TSR can provide adequate or equivalent protection

Such actions SHALL be approved, at a minimum, by the Facility Manager or the Building Emergency Director. If emergency actions are taken, verbal notifications SHALL be made to the Department of Energy (DOE), Richland Operations Office (RL) Facility Representative as soon as practicable (10 CFR 830.205 [b]).

D.1.7 AC Element Not Met

Deficiencies in a program or procedure non-compliances that indicate a programmatic breakdown significant enough to render the safety analysis invalid, or failure to comply with a Safety Management Program (SMP) key attribute is an AC element not met. Isolated discrepancies in a program or procedure do not, by themselves, constitute a TSR AC VIOLATION.

If an AC element is discovered not to have been performed or not have been followed, this would not necessarily result in a TSR AC VIOLATION. If failure to meet an AC element does not result in a TSR AC VIOLATION based on any one of the criteria listed in Table D-1, then this would be reported as a noncompliance with a hazard control (occurrence reporting severity category SC3). If the failure to meet an AC element results from any one of the criteria listed in Table D-1, then this constitutes a TSR AC VIOLATION and the steps in Section D.1.8 must be completed.

Table D-1. Criteria Constituting TSR AC VIOLATIONS

• A required program has not been established
• The program has been established but the facility has not attempted to implement the program
• Time frames or actions specified upon failure to meet an AC element are not met
• Failure to comply with the program requirements specified in this document results in multiple recurrences of a specific key element not being met, indicating a programmatic breakdown

D.1.8 TSR AC Violations

The following actions SHALL be taken in the event that a TSR AC VIOLATION occurs (this includes SACs):

24. Terminate Affected ACTIVITY(ies) IMMEDIATELY except as necessary to achieve a safe configuration.
25. Take the following reporting actions:
    a. Make appropriate entries documenting the failure to meet the AC element(s) in the Facility record, indicating any operational areas affected and restrictions imposed. Maintain the status of restrictions and operational areas affected in the facility as recovery progresses.
    b. Notify RL in accordance with DOE occurrence reporting requirements
    c. Prepare an Occurrence Report and implement the corrective action management process, as required.
26. Restore administrative element within 10 working days.

Affected ACTIVITY(ies) may be resumed at any time when the relevant AC element(s) have been restored.

D.1.9 General Principles of Operability

There are no LCOs. Therefore, Principles of OPERABILITY are not required.

D.2 Safety Limits

There are no SLs for the PUREX Facility.

D.3 Limiting Conditions of Operations

There are no LCOs for the PUREX Facility.

D.4 Operating Limits and Surveillance Requirements

There are no OPERATING LIMITS identified for the PUREX Facility. There are no SURVEILLANCE REQUIREMENTS associated with the administrative TSRs presented below.

D.5 Administrative Technical Safety Requirements

This section presents the ADMINISTRATIVE CONTROLS (ACs) for the PUREX Facility. The ADMINISTRATIVE CONTROLS are provisions relating to organization and management, procedures, record keeping, assessment, and reporting necessary to ensure the safe operation of the facility.

This section also identifies the SPECIFIC ADMINISTRATIVE CONTROLS (SACs) required with the issuance of DOE-STD-1186-2016, to provide increased attention and heightened assurance of effectiveness and reliability of the safety functions performed by the ACs designated as SACs.

The SACs identified in this section were designated based on their roles in the accident analyses in Section 3.4 of this DSA as being relied upon in preventing and mitigating postulated accident scenarios. These SACs, along with the other programmatic ACs, SHALL be established, implemented, and maintained. Designation of SACs does not reduce the requirement for compliance with the other ACs in this TSR.

D.5.1 Safety Management Programs (AC)

D.5.1.1 Applicability

SMP applicability will be established, implemented, and maintained to ensure that the overall safety function of an SMP is maintained through implementation of all applicable key attributes of the SMPs identified in HNF-11724, *CH2M Hill Plateau Remediation Company Safety Management Programs,* as modified by Chapter 7.0 of this DSA. This AC applies to the planned activities (e.g., S&M and pre-demolition) until such time as the facility inventory is reduced and the facility can be re-categorized as less than a Hazard Category 3 nuclear facility.

D.5.1.2 Requirements

a. The following SMPs, as described in HNF-11724, SHALL be established, implemented, and maintained as applicable, unless otherwise noted in the DSA.

- Prevention of Inadvertent Criticality*—as applicable per HNF-7098, *Criticality Safety Program* (Chapter 6)
- Radiation Protection* (Chapter 7)
- Hazardous Material Protection* (Chapter 8)
- Radioactive and Hazardous Waste Management* (Chapter 9)
- Initial Testing, In-Service Surveillance, and Maintenance (Chapter 10)
- Operational Safety* (Conduct of Operations/Fire Protection) (Chapter 11)
- Procedures and Training (Chapter 12)
- Human Factors (Chapter 13)
- Quality Assurance* (Chapter 14)
- Emergency Preparedness Program* (Chapter 15)
- Management, Organization, and Institutional Safety Provisions (Chapter 17)

Note: Program key element c, listed below, only applies to those SMPs identified above by an asterisk (*).

b. Project Management SHALL ensure the overall safety function of an SMP (identified above) is maintained through implementation of all applicable program key attributes identified in HNF-11724, as modified in Chapter 7.0 of this DSA. They will also ensure SMP implementation assessments are performed on those SMPs identified in Part "a" above.

c. For those SMPs identified above by an asterisk (*), the resulting data will be provided to the appropriate program manager for tracking and trending, and corrective action management required by PRC-PRO-QA-052, *Issues Management*, or successor document.

D.5.1.3 Responsibility

Facility Management is responsible to ensure that the applicable commitments of the SMPs are implemented and that the continuous improvement commitment of the Integrated Safety Management System is maintained.

D.5.1.4 Recovery

See Section D.1.8.

D.5.1.5 Basis

These SMPs provide significant contributions to worker safety and are an integral part of safe S&M operations at the PUREX Facility.

D.5.2 Material Management (SAC)

This Directive Action SAC provides control to ensure that no additional radiological material will be added to the PUREX Facility inventory, and that inventories of externally-staged, packaged radioactive waste or TRU-containing equipment removed from PUREX facilities assumed in the accident analyses will not be exceeded, to prevent the facility from being outside those conditions which have been formally analyzed.

D.5.2.1 Applicability

This SAC applies to the PUREX Facility radiological inventory within the PUREX nuclear facility boundary (Figure 2-2).

D.5.2.2 Critical Safety Function

The function of the Material Management control is to protect the assumptions made in the accident analyses for the PUREX Facility, by preventing the addition of radiological material to the PUREX Facility inventory, and by limiting the maximum amount of TRU wastes that may be staged outside (but within the PUREX Facility boundary).

CONTROL DESCRIPTION

a. Inventory Control: Addition of radiological material to the existing PUREX Facility radiological inventory is prohibited.

b. Inventory Limit: PUREX Facility externally-staged radioactive inventory (TRU waste containers and TRU-containing equipment removed from PUREX facilities) SHALL be maintained in accordance with limits given in Table D-2.

Table D-2. PUREX TRU Waste Inventory Limits

	Limit (DE-Ci)	Limit (g 202A isotope mix)	BASIS ACCIDENTS
Externally Staged Waste Limit	40	239	3.4.4, 3.4.5

D.5.2.3 Basis

TOPIC	BASIS
BACKGROUND SUMMARY	SAC D.5.2 "Material Management" prohibits the addition of radiological material to the existing PUREX Facility inventory, and provides inventory limits for staged TRU waste and TRU-containing equipment removed from PUREX in DE-Ci, with a gram equivalency for the 202A isotope mixture. The functional requirement of this SAC is to protect the analytical assumptions on MAR inventory used in the accident analyses documented in Chapter 3.
APPLICATION TO SAFETY ANALYSIS	One element of this SAC (D.5.2 a "Inventory Control) is applicable to all PUREX analyzed accidents; SAC elements D.5.2 b "Inventory Limit" is applicable to basis accidents SP-3 and FIR-1.
SAC D.5.2	This control provides the following elements:
SAC D.5.2 a Inventory Control	Accidents analyzed in this DSA each have an assumed MAR value, from which the accident consequences are calculated. This aspect of the SAC protects these accident assumptions by ensuring that no additional radiological inventory will be added to that already known to be present in PUREX facilities. Were additional inventory allowed to be added, this would invalidate the existing accident analyses and leave the facility in an analytically-unknown configuration outside of the approved safety basis.
SAC D.5.2 b Inventory Limits	Accidents SP-3 and FIR-1 assume a radiological inventory and configuration that define the analyzed dose consequences for externally-staged TRU waste and TRU-contaminated equipment external to PUREX Facility buildings. This SAC ensures that the applicable MAR inventory assumption of 40 DE-Ci (239 g 202A isotope mix) derived from the inventory in the DSA (see 4.3.1.4) is maintained. Table D-3 below provides details including unit conversions.
APPLICABILITY	PUREX has only one defined Mode: S&M Mode. The PUREX Facility consists of all the area within the boundary as shown in Figure 2-3. This SAC applies to all radiological inventory within the PUREX boundary, and specifically to externally-staged TRU waste containers (and TRU-containing equipment removed from PUREX facilities) within the facility boundary at all times.

Table D-3. PUREX Waste Isotope Mixture

Isotope	[g per g]	SA [Ci/g]	[DE-Ci/Ci]	[FGE/g]	[grams]	[DE-Ci]	[FGE]
^{238}Pu	6.29E-04	1.71E+01	9.22E-01	1.13E-01	0.2	2.4	0.0
^{239}Pu	8.30E-01	6.21E-02	1.00E+00	1.00E+00	198.9	12.4	198.9
^{240}Pu	1.30E-01	2.28E-01	1.00E+00	2.25E-02	31.2	7.1	0.7
^{241}Pu	2.26E-03	1.03E+02	1.80E-02	2.25E+00	0.5	1.0	1.2
^{242}Pu	2.69E-03	3.93E-03	9.60E-01	7.50E-03	0.6	0.0	0.0
^{241}Am	2.48E-02	3.43E+00	8.40E-01	1.88E-02	5.9	17.1	0.1
^{90}Sr	3.05E-03	1.37E+02	4.80E-04	0.00E+00	0.7	0.0	0.0
^{137}Cs	5.96E-03	8.70E+01	9.20E-05	0.00E+00	1.4	0.0	0.0
Total Pu	--	--	--	--	**231.4**	**22.8**	**200.8**
Total FP	--	--	--	--	**2.2**	**0.1**	**0.0**
Total:	1.0	--	--	--	**239.5**	**40.0**	**200.9**

Per CP-51329, *Evaluation of TSR Compliance for the 224-T Waste Storage Area and all Surveillance and Maintenance Satellite Accumulation Waste Areas,* an excessive amount of LLW/MLLW (as characterized in the waste profile WPPRCIFSM001, *Waste Stream Profile: Central Plateau Surveillance and Maintenance Facilities*) is necessary to exceed the MAR limits established in the CPRM safety bases. For perspective, two ERDF roll-off waste boxes have a total volume of 44.80 m^3 (1582 ft^3) with a maximum gross container weight of 100,000 lbs. which equates to approximately 0.3 DE-Ci based on the general low-level waste profile described in WPPRCIFSM001. Administratively per waste packaging procedures, ERDF roll-off waste boxes are limited to 40,000 lb, so one ERDF box is approximately 0.15 DE-Ci.

D.5.3 Nuclear Criticality Safety (AC)

This AC establishes a Criticality Safety Program and provides measures that ensure that Criticality Safety Program key elements are in place to prevent an accidental criticality at PUREX.

Location Applicability: This AC is applicable where non-exempt quantities of fissionable material are present.

This AC includes the following elements:

a. Limits and Controls – Criticality limits and controls SHALL be derived in Criticality Safety Evaluation Reports (CSERs) and implemented in Criticality Prevention Specifications (CPSs) and/or procedures.

b. Engineered Safety Features – Engineered safety features important to criticality safety will be evaluated for safety significance and this TSR updated where needed as specified by the Criticality Safety Program (HNF-7098).

c. Notification – A process SHALL be in place to provide notification, determine cause, and provide corrective action in the event a Criticality Safety Program (HNF-7098) requirement is not met.

d. Nonconformances – Criticality Safety Nonconformances that involve a Programmatic Noncompliance (i.e., one of the above key elements is not met) SHALL be reported as TSR AC elements not met. More serious nonconformances or infractions that indicate a programmatic breakdown that renders the DSA summary invalid SHALL be reported as TSR VIOLATIONS in accordance with Section D.1.8.

D.6 Design Features

A depth of 0.9 m (3 ft) of the Storage Tunnel 2 Soil Overburden is a passive, mitigative SS DESIGN FEATURE that is credited to mitigate fire- or collapse-related releases from the Storage Tunnels. This is represented by using a LPF of 0.5.

The Storage Tunnel 2 Soil Overburden is approximately 2.4 m (8 ft) deep; only 0.9 m (3 ft) of soil is required to prevent a penetration of the tunnel due to an aircraft impact per DOE-STD-1120-2005, *Integration of Environment, Safety, and Health into Facility Disposition Activities*.

See section 3.4.3.1 for more information.

Severe climate and wind erosion could not realistically threaten the 0.9 m (3 ft) limit identified above by removing 5 ft of dirt from the soil overburden. In addition, this passive, mitigative DESIGN FEATURE is inspected on an annual basis via CPSM-PRO-OP-50668.

D.7 References

10 CFR 830, "Nuclear Safety Management," *Code of Federal Regulations*, as amended.

CP-51329, 2014, *Evaluation of TSR Compliance for the 224-T Waste Storage Area and all Surveillance and Maintenance Satellite Accumulation Waste Areas*, Rev. 2, CH2M HILL Plateau Remediation Company, Richland, Washington.

CPSM-PRO-OP-50668, 2015, *Surveillance of PUREX Facility*, Rev. 5-1, CH2M HILL Plateau Remediation Company, Richland, Washington.

DOE-STD-1120-2005, 2005, *Integration of Environment, Safety, and Health into Facility Disposition Activities*, U.S. Department of Energy, Washington, D.C.

DOE-STD-1186-2016, 2016, *Specific Administrative Controls*, U.S. Department of Energy, Washington, D.C

HNF-7098, *Criticality Safety Program*, as amended, CH2M HILL Plateau Remediation Company, Richland, Washington.

HNF-11724, *CH2M HILL Plateau Remediation Company Safety Management Programs*, as amended, CH2M HILL Plateau Remediation Company, Richland, Washington.

PRC-PRO-QA-052, *Issues Management*, CH2M HILL Plateau Remediation Company, as amended, Richland, Washington.

WPPRCIFSM001, 2012, *Waste Stream Profile: Central Plateau Surveillance and Maintenance Facilities*, Rev. 0, Washington Closure Hanford, Richland, Washington.