1250773
[0064090H] S

SUPPORTING DOCUMENT

1. Total Pages 71

2. Title	3. Number	4. Rev No.
The 242-A Evaporator/Crystallizer Tank System Integrity Assessment Report	WHC-SD-WM-ER-124	1

5. Key Words

Waste, Processing, Evaporator, Integrity, Assessment, Slurry, Condensate

APPROVED FOR PUBLIC RELEASE

KMB 4/27/94

6. Author

Name: P. C. Ohl

Signature

Organization/Charge Code 7E600/N3BR1

7. Abstract

The integrity of the existing 242-A Evaporator/Crystallizer Facility was assessed by leak testing, inspections, ultrasonic examination, and technical review. All applicable requirements of the Washington State Dangerous Waste Regulations, Washington Administrative Code (WAC) 173-303-640 were considered in the assessment and a single issue was identified. The Pump Room sump may require secondary containment.

8. ~~PURPOSE AND USE OF DOCUMENT - This document was prepared for use within the U.S. Department of Energy and its contractors. It is to be used only to perform, direct, or integrate work under U.S. Department of Energy contracts. This document is not approved for public release until reviewed.~~

~~PATENT STATUS - This document copy, since it is transmitted in advance of patent clearance, is made available in confidence solely for use in performance of work under contracts with the U.S. Department of Energy. This document is not to be published nor its contents otherwise disseminated or used for purposes other than specified above before patent approval for such release or use has been secured, upon request, from the Patent Counsel, U.S. Department of Energy Field Office, Richland, WA.~~

DISCLAIMER - This report was prepared as an account of work sponsored by an agency of the United States Government. Neither the United States Government nor any agency thereof, nor any of their employees, nor any of their contractors, subcontractors or their employees, makes any warranty, express or implied, or assumes any legal liability or responsibility for the accuracy, completeness, or any third party's use or the results of such use of any information, apparatus, product, or process disclosed, or represents that its use would not infringe privately owned rights. Reference herein to any specific commercial product, process, or service by trade name, trademark, manufacturer, or otherwise, does not necessarily constitute or imply its endorsement, recommendation, or favoring by the United States Government or any agency thereof or its contractors or subcontractors. The views and opinions of authors expressed herein do not necessarily state or reflect those of the United States Government or any agency thereof.

9. Impact Level N/A D.H. 3-4-94

10. RELEASE STAMP

OFFICIAL RELEASE BY WHC (5)
DATE APR 27 1994
Stan 4

RECEIVED
DEC 18 2018
EDMC

106

RECORD OF REVISION	(1) Document Number WHC-SD-WM-ER-124	Page 1

(2) Title
The 242-A Evaporator/Crystallizer Tank System Integrity Assessment Report

CHANGE CONTROL RECORD

(3) Revision	(4) Description of Change - Replace, Add, and Delete Pages	Authorized for Release (5) Cog. Engr.	(6) Cog. Mgr. Date
0	(7) EDT-140982 (6/2/93)		
~~RS~~ 1	Incorporate ECN-608025	P. C. Ohl	P. C. Ohl 3/24/94

DECLASSIFIED DEC 14 2018 ECN

WHC-SD-WM-ER-124
Revision 1

The 242-A Evaporator/ Crystallizer Tank System Integrity Assessment Report

Prepared for the U.S. Department of Energy
Office of Environmental Restoration and
Waste Management

Westinghouse
Hanford Company Richland, Washington

Hanford Operations and Engineering Contractor for the
U.S. Department of Energy under Contract DE-AC06-87RL10930

Approved for Public Release

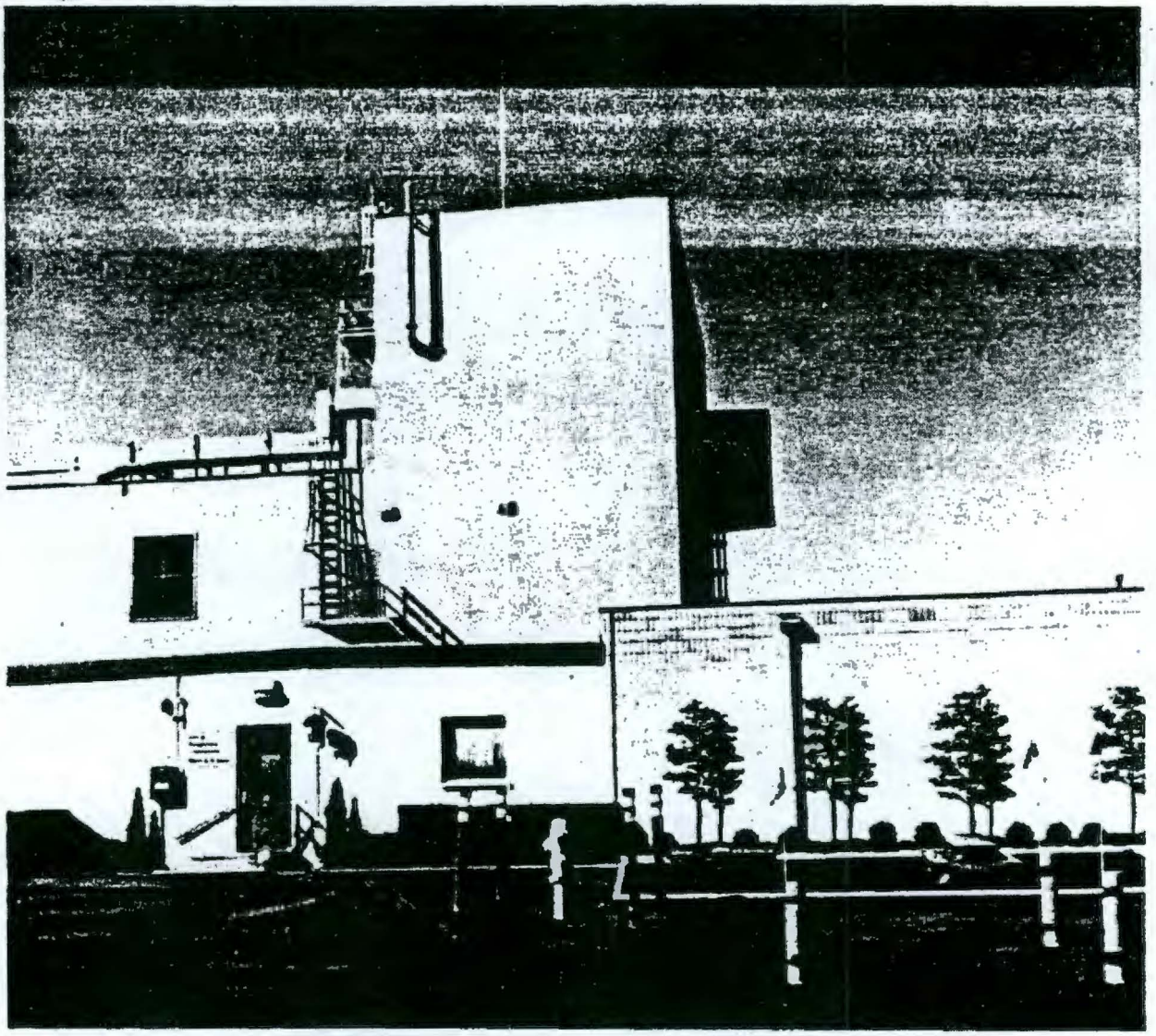

242-A EVAPORATOR FACILITY

United States Department of Energy
200 East Area, Hanford Operations
Richland, Washington 99352

Document Title: 242-A EVAPORATOR/CRYSTALLIZER TANK SYSTEM INTEGRITY ASSESSMENT REPORT

Author: _____ 4/29/93
Phillip C. Ohl, Senior Engineer — Date
Engineering and Projects Department
Tank Waste Remediation System (TWRS) Division

Author: _____ 5/5/93
Edward S. Ruff, Principal Engineer — Date
Materials & Welding Engineering Section
Engineered Applications Division

Manager: _____ 4/29/93
Mary Ann McLaughlin, Manager — Date
Technical Assessments Group
TWRS Division

Manager: _____ 5/5/93
Keith V. Scott, Manager — Date
System Structural Integrity Assessments

Reviewer: _____ 5/12/93
David S. Haring, 242-A Evaporator Cognizant Engineer — Date
Waste Concentration Process Engineering Group
TWRS Division

_____ 4/29/93
Richard J. Nicklas, Manager — Date
Waste Concentration Process Engineering Group
TWRS Division

_____ for J.E. Fomey 5/12/93
James E. Geary, Facility Manager 242-A — Date
200 East Tank Farm Facilities Group
TWRS Division

_____ 5/12/93
H. K. Ananda, Principal Engineer — Date
Environmental Quality Assurance Section
TWRS Division

_____ 5-3-93
Ana R. Sherwood, Senior Engineer — Date
RCRA Compliance Support Group
Restoration and Remediation Division

INDEPENDENT, QUALIFIED, REGISTERED PROFESSIONAL ENGINEER (IQRPE) CERTIFICATION

Approval of

WHC-SD-ER-WM-124 REV 0
242-A Evaporator/Crystallizer TANK SYSTEM
INTEGRITY ASSESSMENT REPORT

"I have reviewed this document and believe the inspections, tests and analyses described herein are sufficient for assessment of the tank system integrity in accordance with Washington Administrative Code (WAC) Section 173-303-640(2)."

"I certify under penalty of law, that I have personally examined and, am familiar with, the information submitted in this document and all attachments and that, based on my inquiry of those individuals immediately responsible for obtaining the information, I believe that the information is true, accurate, and complete. I am aware that there are significant penalties for submitting false information, including the possibility of fine and imprisonment."

Albert D. Edmondson
United Engineers and Constructors, Inc.
Registered Professional Engineer
Washington State PE Registration #20550

May 14, 1993
Date

ALBERT D. EDMONDSON
STATE OF WASHINGTON
20550
REGISTERED
PROFESSIONAL ENGINEER
EXPIRES Feb. 06, 1995

ACKNOWLEDGEMENTS AND CONTRIBUTORS

H. K. Ananda, Quality Assurance Support

K. A. Beecher, Nuclear Facility Safety Support

W. C. Carlos, NACE Corrosion Specialist Review

J. I. Diehl, Leak Test and Walkdown QC Inspections

C. Entrop, Technical Editing and Publications Support

J. N. Furth, NDE Support

J. E. Geary, Facility Engineering Support

D. S. Haring, Facility Engineering Support

R. D. Lipp, Technical Support to Integrity Assessment Plan

J. W. McMullen, Facility Operations Support

D. A. Moody, Design Standards Evaluation

W. H. Nelson, NDE Support

T. B. Paulsell, Facility Operations Support

L. A. Rathbun, Radiation Effects to Gaskets

A. R. Sherwood, RCRA Compliance Support

F. R. Vollert, Structural Engineering Review

CONTENTS

1.0 INTRODUCTION 1

2.0 SCOPE OF THE INTEGRITY ASSESSMENT 8
- 2.1 PROCESS DESCRIPTION 8
- 2.2 SYSTEM DESCRIPTION 9
  - 2.2.1 Evaporator Process and Slurry Subsystem 10
  - 2.2.2 Vapor Condenser Subsystem 10
  - 2.2.3 Vessel Vent Subsystem (Non-dangerous Waste) 10
  - 2.2.4 Process Condensate Subsystem 10
  - 2.2.5 Steam Condensate Subsystem (Non-dangerous Waste) 10
  - 2.2.6 Used Raw Water Subsystem (Non-dangerous Waste) 11
  - 2.2.7 Building and Secondary Containment Subsystem 11

3.0 RESULTS AND DATA 25
- 3.1 LEAK TEST 25
- 3.2 INSPECTION 25
  - 3.2.1 Visual Walkdown 25
  - 3.2.2 Non-Destructive Examination 26
- 3.3 ANALYSIS 26
  - 3.3.1 Structural Evaluation 26
  - 3.3.2 Corrosion Evaluation 26

4.0 DISCUSSION 29
- 4.1 DESIGN STANDARDS 29
- 4.2 DANGEROUS CHARACTERISTICS OF THE WASTE 29
- 4.3 EXISTING CORROSION PROTECTION 29
  - 4.3.1 Environments 33
  - 4.3.2 Materials 33
  - 4.3.3 Compatibilities 35
- 4.4 TANK SYSTEM AGE 36
- 4.5 TANK SYSTEM LEAK TEST AND INSPECTION 37
  - 4.5.1 Leak Test 37
  - 4.5.2 Inspection 38

5.0 QUALITY ASSURANCE 40

6.0 FUTURE INTEGRITY ASSESSMENTS 41
- 6.1 FUTURE INTEGRITY ASSESSMENT FREQUENCY 41
- 6.2 FUTURE INTEGRITY ASSESSMENT SCOPE 41

7.0 CONCLUSIONS, DEFICIENCIES, AND RECOMMENDATIONS 42
- 7.1 CONCLUSIONS 42
- 7.2 DEFICIENCIES 42
- 7.3 RECOMMENDATIONS 43

8.0 REFERENCES 44

APPENDIX A DATA PACKAGE FOR 242-A EVAPORATOR/CRYSTALLIZER TANK SYSTEM INTEGRITY REPORT (WHC-SD-WM-DP-019)

LIST OF FIGURES

1 The 242-A Evaporator Perspective 2

2 The 242-A Evaporator Simplified Schematic 3

3 The 242-A Evaporator Process Loop 4

4 The 242-A Evaporator Simplified Process Flow Diagram 5

5 The 242-A Evaporator First Floor Plan 6

6 The 242-A Evaporator Second Floor Plan 7

7 The 242-A Evaporator Process and Slurry Subsystem 13

8 The 242-A Evaporator Vapor Condenser Subsystem 14

9 The 242-A Evaporator Vessel Vent Subsystem 15

10 The 242-A Evaporator Process Condensate Subsystem 16

11 The 242-A Evaporator Steam Condensate Subsystem 17

12 The 242-A Evaporator Steam Condensate Subsystem 18

13 The 242-A Evaporator Used Raw Water Subsystem 19

14 The 242-A Evaporator Used Raw Water Subsystem 20

15 The 242-A Evaporator Used Raw Water Subsystem 21

16 The 242-A Evaporator Building and Secondary Containment Subsystem 22

17 The 242-A Evaporator Building and Secondary Containment Subsystem 23

18 Pump Room Sump Schematic 24

LIST OF TABLES

1 Nondestructive Examination Results 27

2 242-A Design Standards 30

3 242-A Evaporator Bulk Chemistry Solutions 32

4 242-A Facility Piping and Component Materials 34

5 242-A Component Qualification 39

ACRONYMS AND ABBREVIATIONS

ALARA	As Low As Reasonably Achievable
ANSI	American National Standards Institute
ASME	American Society of Mechanical Engineers
ASTM	American Society for Testing and Materials
CS	carbon steel
CFR	Code of Federal Regulations
Data Package	*Data Package for 242-A Evaporator/Crystallizer Tank System Integrity Assessment Report*, WHC-SD-WM-DP-019
DOE	U.S. Department of Energy
DSSF	double-shell slurry feed
Ecology	Washington State Department of Ecology
HEPA	High-Efficiency Particulate Air (Filter)
IQRPE	Independent Qualified Registered Professional Engineer
IX	Ion Exchange
LERF	Liquid Effluent Retention Facility
NACE	National Association of Corrosion Engineers
NDE	nondestructive examination
pH	negative logarithm of hydrogen ion concentration ($-\log[H^+]$)
QA	quality assurance
QC	quality control
SCC	stress corrosion cracking
SD	supporting document
SS	stainless steel
SSE	safe shutdown earthquake
UT	ultrasonic testing
VT	visual test (visual inspection)
WAC	Washington Administrative Code
WHC	Westinghouse Hanford Company

EXECUTIVE SUMMARY

The 242-A Evaporator/Crystallizer was assessed through inspection, testing, and analysis to determine if the facility components had adequate structural integrity and compatibility with the wastes to be processed through the facility. This facility processes wastes generated from previous Hanford defense production operations. These wastes are segregated by the evaporator/crystallizer process into a concentrated slurry, which is returned to large underground tanks for continued storage at a greatly reduced volume, and a process condensate, which is transferred to the Liquid Effluent Retention Facility for storage before further processing. During inspection of the facility, corrective maintenance items were identified and, subsequently, work activities associated with closing these items have been completed.

Washington State Dangerous Waste Regulations, *Washington Administrative Code* (WAC) 173-303, require integrity assessments of existing dangerous waste tank systems to consider the following, as a minimum:

(i) Design Standards

(ii) Dangerous Characteristics of the Waste

(iii) Existing Corrosion Protection

(iv) Tank System Age

(v) Results of a Leak Test, Internal Inspection, or Other Integrity Examination.

The 242-A Evaporator/Crystallizer (Hanford Project B-100) was designed and constructed in 1977 in accordance with appropriate national consensus codes and standards and U.S. Department of Energy (DOE) orders for the defined

mission of high-level radioactive waste concentration and volume reduction for a design life of 10 years. To extend the mission of the facility through the year 2003, the recent Project B-534 used appropriate national consensus codes and standards and DOE orders for upgrade of the facility components. Review of the Project B-100 construction files indicates that the building structure was designed and constructed to withstand a design basis earthquake. Detailed seismic analyses were not retrievable for the majority of the piping and components.

Dangerous characteristics of the wastes processed through the 242-A Evaporator/Crystallizer are defined in the Part A Permit. The wastes are categorized as "Extremely Hazardous" in WAC-173-303.

Existing corrosion protection is provided by material selection, facility design, and protective coatings. These controls were found to be adequate for continued corrosion protection of the facility and components.

The "tank system age" for the facility and the majority of the components is 16 years. The facility was constructed in 1977 under Hanford project B-100. The E-C-1 Primary Condenser (fabricated as a spare in 1976), P-B-1 Pump, P-B-2 Bottoms Pump, and miscellaneous piping were replaced as part of the Project B-534 Upgrades in 1990. The TK-C-100 Condensate Catch Tank was originally fabricated in 1951 as part of a separate Hanford project that was canceled. This tank was modified in 1977 for installation in the 242-A Evaporator/Crystallizer facility.

Leak tests and inspections were performed on the 242-A Evaporator/Crystallizer facility and components. The C-A-1 Evaporator, E-A-1 Reboiler, and TK-C-100 Condensate Catch Tank were leak tested in November 1992 in accordance with an approved leak test procedure. Accessible areas of the facility and components were visually inspected during a facility walkdown in October 1990 for evidence of degradation and failure. In addition to the walkdown inspections, critical components were examined using Ultrasonic Testing for wall thickness measurements. During inspection of the facility, corrective maintenance items were identified and subsequently, work activities associated with closing the items have been completed.

The pump room sump could not be demonstrated to provide compliant secondary containment. This sump provides secondary containment for the Evaporator/Crystallizer but also acts as a liquid seal between the Evaporator/Crystallizer and the 241-AW-102 Feed Tank. Although the liquid seal is raw water, the sump and consequently the liquid seal water are assumed to be contaminated with dangerous waste(s). The pump room sump is noted as a deficiency requiring further study in Section 7.2, "Deficiencies", of this report.

The conclusion of this integrity assessment is that the 242-A Evaporator/Crystallizer system is not leaking and is fit for use. The inspections, tests, and analyses performed provide reasonable assurance that the 242-A Evaporator/Crystallizer tank system has adequate design, sufficient structural strength, and sufficient compatibility with the wastes to not collapse, rupture, or fail during service loads associated with normal

operations. Specific recommendations for continued operation of the facility and operational enhancement are included in Section 7.0, "Conclusions, Deficiencies, and Recommendations", of this report.

This page intentionally left blank.

242-A EVAPORATOR/CRYSTALLIZER TANK SYSTEM INTEGRITY ASSESSMENT REPORT

1.0 INTRODUCTION

Portions of the 242-A Evaporator/Crystallizer facility on the U.S. Department of Energy (DOE) Hanford Site must periodically be assessed to meet the requirements of the Washington State Department of Ecology (Ecology) *Dangerous Waste Regulations*, Washington Administrative Code (WAC) 173-303. The integrity assessment was limited to the provisions of WAC Sections 173-303-640(2) and (3)(a).

The 242-A Evaporator/Crystallizer facility processes waste solutions from most of the operating laboratories and plants on the Hanford Site. The waste solutions are concentrated in the evaporator to a slurry of liquid and crystallized salts. This concentrated slurry is returned to Hanford Site waste tanks at a significantly reduced volume. The water vapor from the evaporation process is condensed, filtered, and pumped through an ion exchange column before transfer to the Liquid Effluent Retention Facility for continued storage. The noncondensable portion of the vapor is filtered and continuously monitored before venting to the atmosphere. Figures 1 through 6 show schematics and process flow sheets of the 242-A Evaporator/Crystallizer facility.

The 242-A Evaporator/Crystallizer facility was assessed as seven subsystems. Four of the subsystems store, transport, or treat Washington State listed dangerous waste (WAC 173-303). The other three subsystems are integral parts of the process; however, they do not directly store, transfer, or treat material regulated by the WAC. The seven subsystems are defined in *242-A Evaporator/Crystallizer Tank System Integrity Assessment Plan* (WHC 1991) and Section 2.2 of this report.

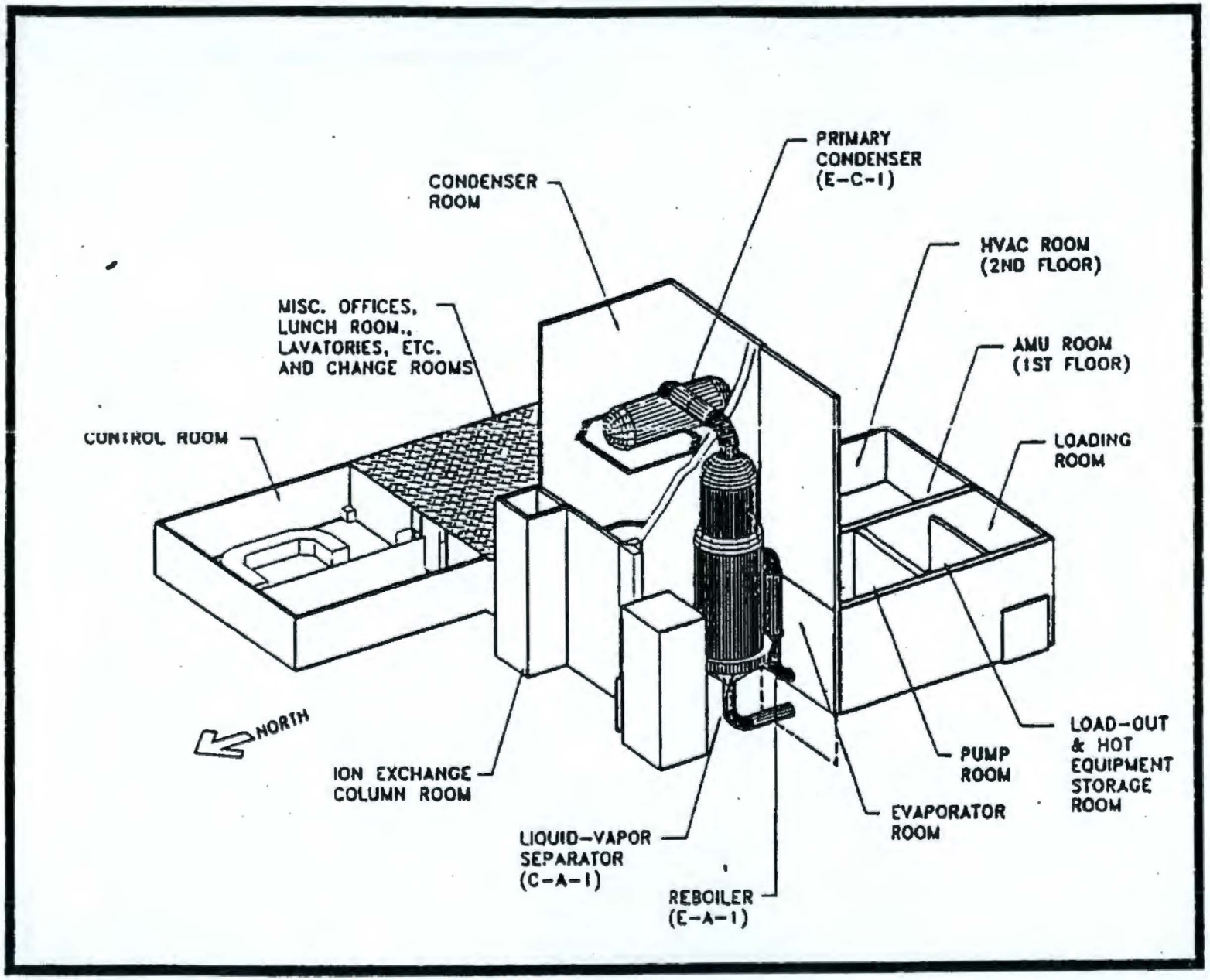

Figure 1. The 242-A Evaporator Perspective.

Figure 2. The 242-A Evaporator Simplified Schematic.

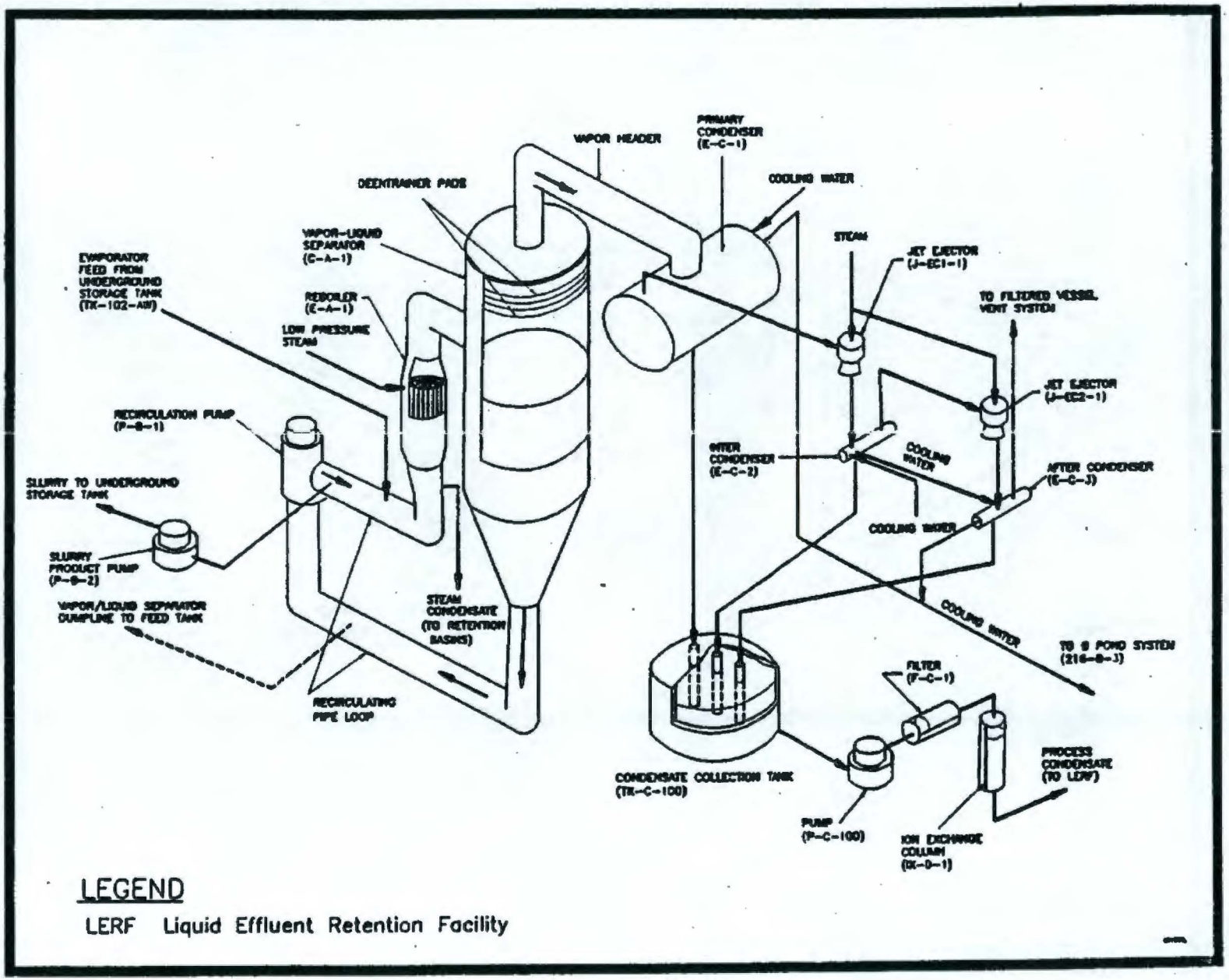

LEGEND

LERF Liquid Effluent Retention Facility

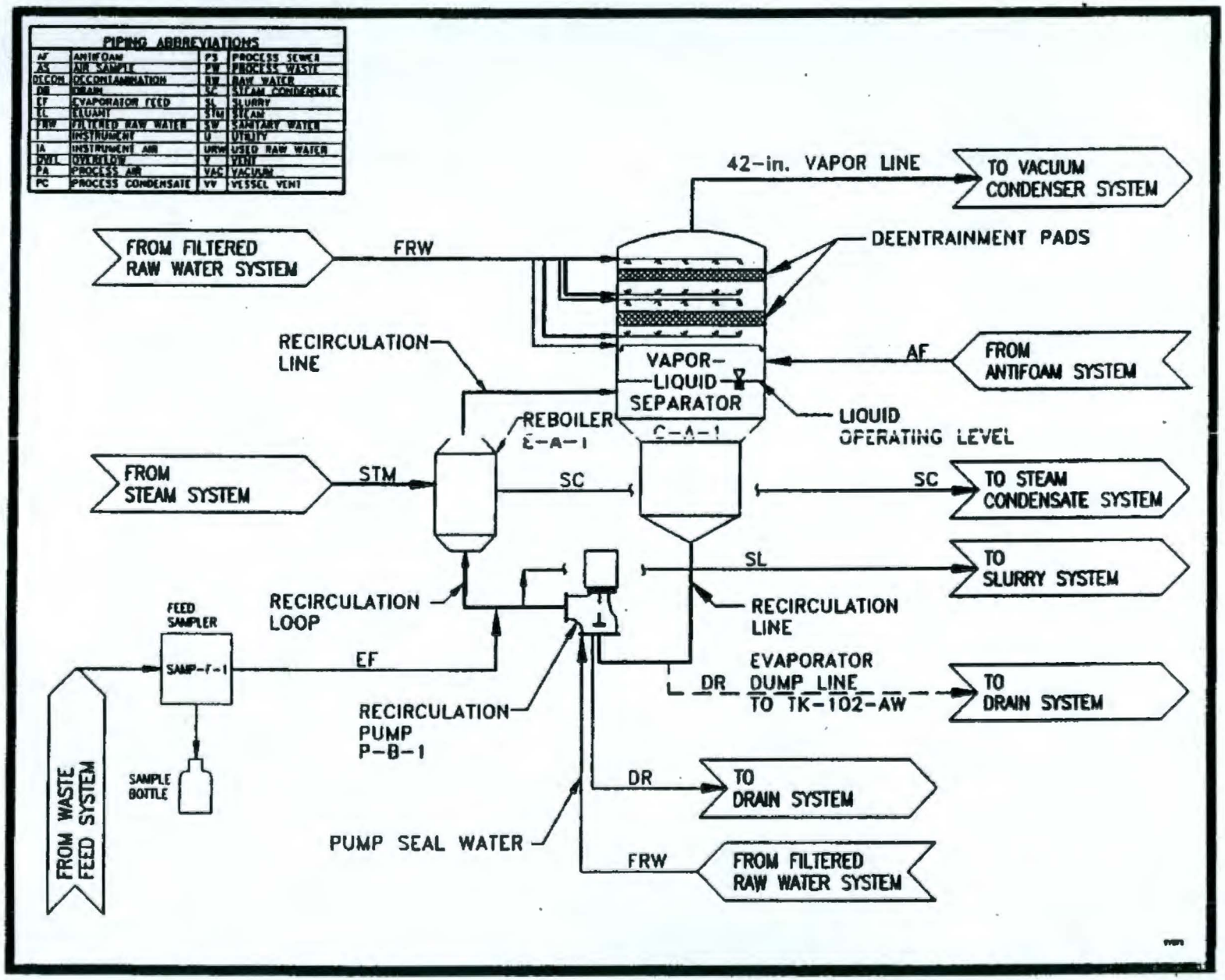

Figure 3. The 242-A Evaporator Process Loop.

Figure 4. The 242-A Evaporator Simplified Process Flow Diagram.

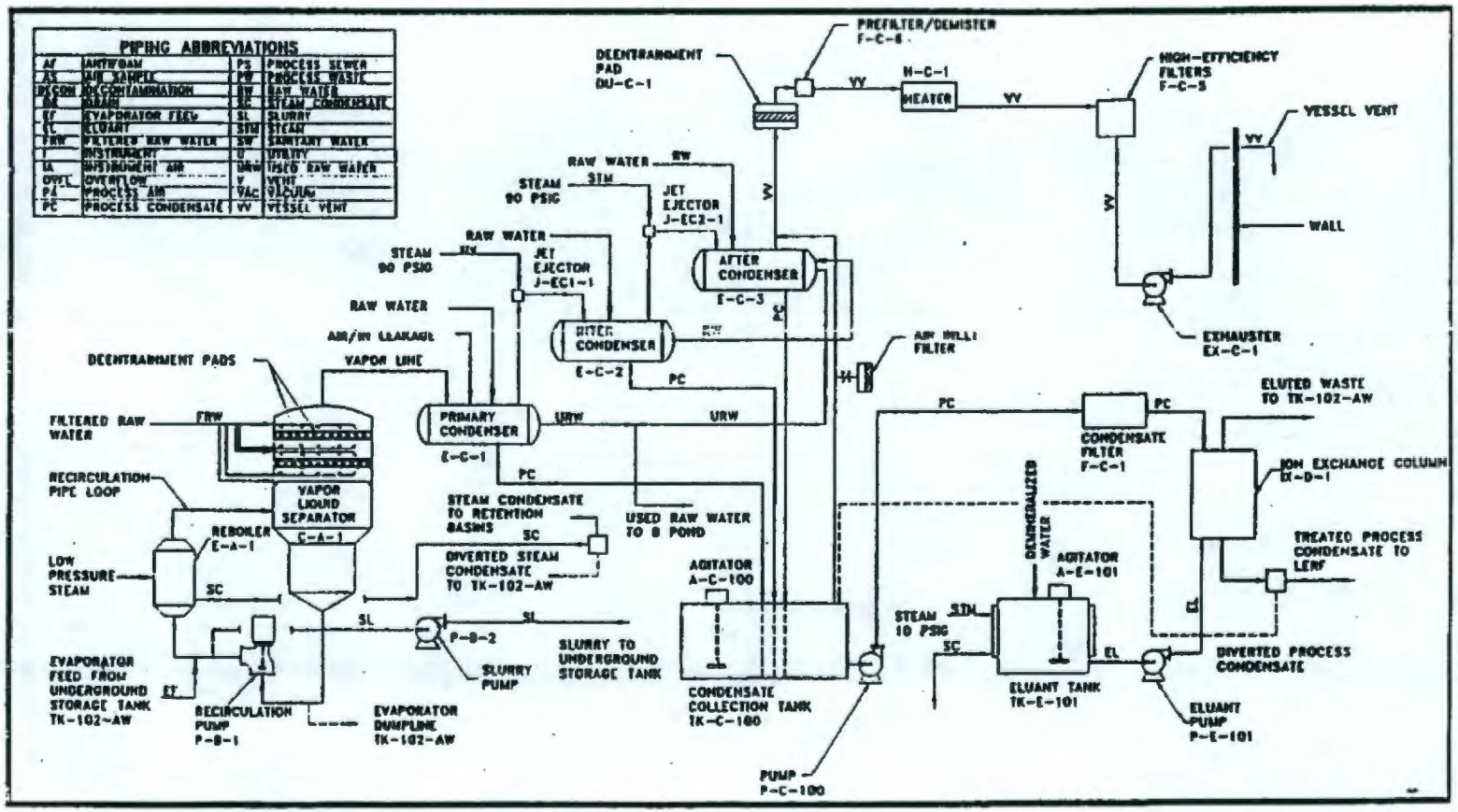

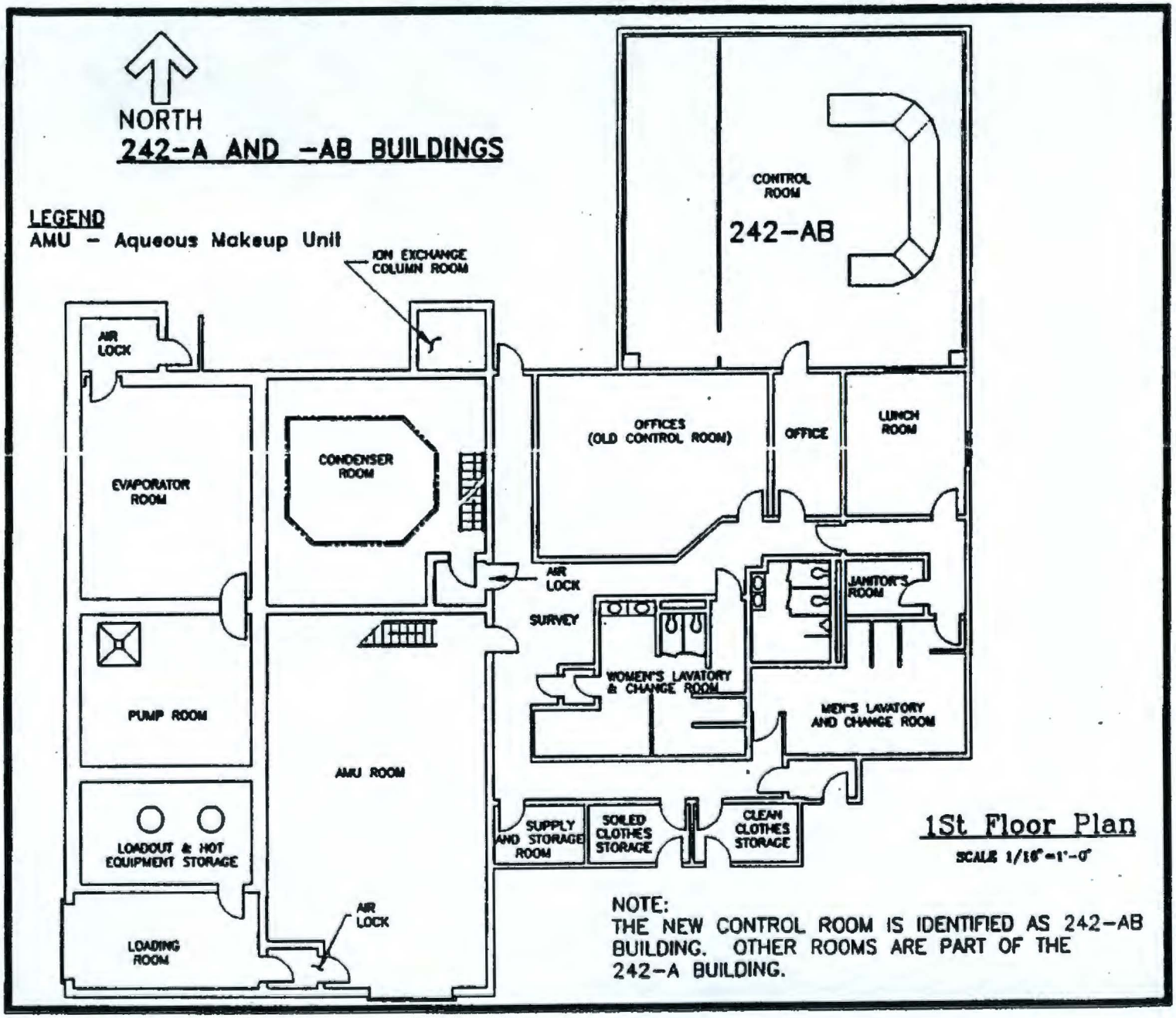

Figure 5. The 242-A Evaporator First Floor Plan.

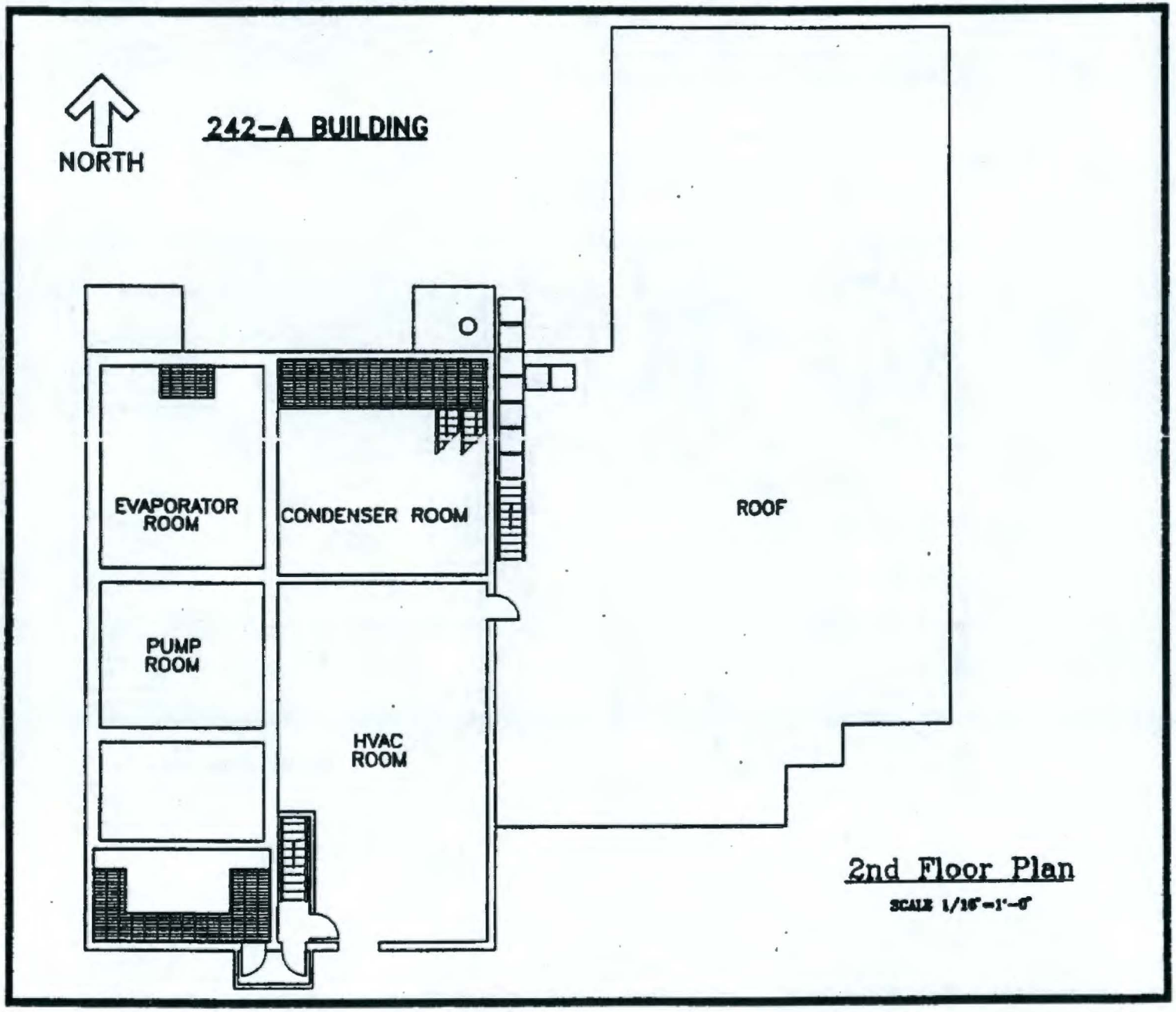

Figure 6. The 242-A Evaporator Second Floor Plan.

2.0 SCOPE OF THE INTEGRITY ASSESSMENT

The boundaries of the 242-A Evaporator/Crystallizer Dangerous Waste Tank System were defined in the integrity assessment plan (WHC 1991) as follows:

> "All associated piping, drains, valves, sumps, secondary containment and tanks which receive, store, accumulate, transfer or treat Washington State listed dangerous waste, or waste components, within the 242-A Facility."

The components and piping included in this integrity assessment are as follows:

> "Piping systems that introduce liquid waste streams into the building, <u>or</u> that transfer solids, liquids, or vapors to other facilities."

These systems were assessed up to, but not including, the last valve or flanged connection inside the 242-A facility perimeter.

The following components and equipment were specifically <u>not</u> considered in this assessment.

- Dangerous waste feed and drain lines from/to 241-AW Tank Farm. (These are to be assessed by the 241-AW Tank System Integrity Assessment.)
- Dangerous waste drain lines to the Liquid Effluent Retention Facility (LERF). (These are to be assessed as part of the LERF permitting process.)
- Drain lines to B-Pond. (These lines do not carry dangerous wastes and consequently, they are not required to be assessed under WAC requirements.)
- Eluent tank and pump. (These do not contain/carry dangerous waste and, also, they are no longer required for operation of the Ion Exchange Column.)

2.1 PROCESS DESCRIPTION

Solutions containing dangerous waste from operating areas and laboratories on the Hanford Site are transferred from DST storage tanks to the 242-A Evaporator/Crystallizer facility for treatment to reduce the storage volume. In the 242-A Evaporator Complex, feed solutions are circulated continuously from the evaporator vessel, through the shell and tube reboiler and back to the evaporator. Heat is added to the circulating solution in the reboiler, and evolved vapor is separated from the mother liquor in the evaporator body. This results in two process streams: (1) A concentrated slurry, commonly referred to as double-shell slurry feed (DSSF), which is

transferred to a DST and (2) vapor that passes through the condensers to become process condensate (PC). The vapor passes through two de-entrainment pads, and then flows to the primary condenser.

Uncondensed vapors and noncondensable gases are pulled from the PC in the primary condenser by a steam jet ejector and then condensed in the intermediate condenser. The process is repeated a third time by the final condenser. The Process Condensate is sent to the LERF for interim storage.

Slurry is transferred to double-shell storage tanks where the suspended solids are allowed to settle. The remaining supernatant is then transferred back to the evaporator feed tank (TK-102-AW) for further processing.

Offgases are filtered and monitored for radioactive contamination before discharge to the atmosphere. Steam condensate is monitored continuously and, if contaminated, is routed to the evaporator feed tank. Uncontaminated cooling water is pumped to evaporation ponds. The steam condensate stream is pumped to interim storage basins (while samples are analyzed) and then to evaporation ponds.

The purpose of the Evaporator is to reduce the volume of wastes requiring interim storage in underground DSTs and eventual treatment and disposal. This reduction is achieved via evaporative concentration. The facility was designed and equipment selected to maintain a set boil-off rate of 40 gal/min (2.65 L/s) at a feed rate of 70-120 gal/min (4.4 to 7.6 L/s), yielding a waste volume deduction factor (WVRF) ranging from 35% to 60%.

2.2 SYSTEM DESCRIPTION

The 242-A Evaporator/Crystallizer facility is described according to the function or process of each of seven subsystems. Four of the subsystems store, transfer, or treat dangerous waste, as listed in WAC 173-303, and three of the subsystems do not.

The 242-A Evaporator/Crystallizer facility consists of the following:

1. Evaporator Process and Slurry Subsystem
2. Vapor Condenser Subsystem
3. Vessel Vent Subsystem (Non-dangerous Waste)
4. Process Condensate Subsystem
5. Steam Condensate Subsystem (Non-dangerous Waste)
6. Used Raw Water Subsystem (Non-dangerous Waste)
7. Building and Secondary Containment Subsystem.

The function of each subsystem is described in the following sections. Equipment and component lists and descriptions of each of the subsystems are included in the integrity assessment plan (WHC 1991).

2.2.1 Evaporator Process and Slurry Subsystem

The Evaporator Process and Slurry subsystem (Figure 7) circulates waste feed through the Evaporator/Crystallizer and the Reboiler, thereby distilling off water vapor (process condensate) and concentrating the waste into a slurry. Distilled water vapor is routed through the Vapor Condenser subsystem and the DSSF is sent to a double-shell tank farm for settling of suspended solids.

2.2.2 Vapor Condenser Subsystem

The Vapor Condenser subsystem (Figure 8) includes the three condensers (E-C-1, E-C-2, and E-C-3), which condense the distilled water vapor from the Evaporator/Crystallizer to form process condensate, which then travels to the Process Condensate subsystem. Uncondensed vapors and noncondensable gases are discharged to the atmosphere through the Vessel Vent subsystem.

2.2.3 Vessel Vent Subsystem (Non-dangerous Waste)

The Vessel Vent subsystem (Figure 9) contains a series of HEPA filters, de-entrainment pads, and various heating, ventilation, and air conditioning equipment. Uncondensed vapors and noncondensable gases coming from the Vapor Condenser subsystem are filtered and vented to the atmosphere through this subsystem.

2.2.4 Process Condensate Subsystem

The Process Condensate subsystem (Figure 10) receives condensed water vapors (process condensate) from the Vapor Condenser subsystem. Process condensate is sent through the IX-D-1 Ion Exchange Column to remove any residual cesium and strontium ions and then to the LERF for interim storage. The Process Condensate subsystem is continuously monitored for radioactive contamination with the RC-3 radiation monitor. In the event of radioactive contamination in the system, process condensate is automatically diverted back to the TK-C-100 Condensate Catch Tank or the 241-AW-102 Feed Tank.

2.2.5 Steam Condensate Subsystem (Non-dangerous Waste)

The Steam Condensate subsystem (Figures 11 and 12) routes condensed steam (that was used to heat the reboiler) to the Steam Condensate Retention Basin for sampling before discharge to B-Pond. The Steam Condensate subsystem is continuously monitored for radioactive contamination with the RC-1 radiation monitor. In the event of radiation detection in the system, the steam condensate is automatically rerouted to the 241-AW-102 Feed Tank.

2.2.6 Used Raw Water Subsystem (Non-dangerous Waste)

The Used Raw Water subsystem (Figures 13 through 15) discharges raw water used as the coolant for the E-C-1, E-C-2, and E-C-3 Condensers to B-Pond. The Used Raw Water subsystem is continuously monitored for radioactive contamination with the RC-2 radiation monitor. In the event of radioactive contamination in the system, an alarm sounds and the system is shut down.

2.2.7 Building and Secondary Containment Subsystem

The Building and Secondary Containment subsystem is shown in Figures 16 and 17. The concrete building and drain/sump form the secondary containment of liquid waste as defined by the WAC 173-303-640(4). Secondary containment must be, as a minimum: (1) structurally sound, (2) compatible with the waste, (3) capable of detecting a leak within 24 hours, and, (4) capable of removing accumulated liquid waste leaks or spills and any precipitation within 24 hours. This subsystem is designed and operated similar to a tank vault. The operating area is a monolithic concrete structure divided into six specific rooms sloped to six primary floor drains that flow by gravity to the pump room sump, which in turn gravity flows back to the 241-AW-102 Feed Tank. A schematic of the pump room sump is included as Figure 18.

The Building and Secondary Containment subsystem is designed to contain 100% of the maximum operating capacity of the evaporator/reboiler loop. The feed tank is also maintained with sufficient contingency space to receive 100% of the operating capacity of the evaporator/reboiler loop. The sump and drain systems have sufficient capacity to drain this entire 27,267 gal in less than the required 24 hours (WHC 1993).

The 242-A concrete building is constructed in accordance with ACI 301-72. A chemical resistant acrylic coating system compatible with the wastes processed through the facility is used to coat the floors and walls of the evaporator, condenser, and pump rooms to a height 10 ft (3 m). The pump room and portions of the evaporator room are also lined with stainless steel catch pans and the pump room sump is fully lined with stainless steel. Preformed bituminous joint fillers (ASTM D994-71) are used as waterstops in all concrete joints. The joints are then sealed with a single-component polysulfide rubber compound [FS TT-S-230A(1)].

The liquid level in the pump room sump is maintained at 38 weight factor in. (96.5 cm) or 479 gal (1,813 L) during operation which is necessarily above the sump drain line opening in order to maintain the air seal between the facility and the 241-AW-102 Feed Tank. This precludes the entry of airborne contaminants from the feed tank. Leak detection for the facility is provided at the sump by weight factor level indication (differential pressure system) with a detectibility of +/-1.4 in. (3.6 cm) or +/-15 gal (56.8 L). The output of the sensor (WFT-SUMP-1) is continuously recorded at the 242-A Control Room Leak detection can also be confirmed by weight factor level indication in the C-A-1 Evaporator and conductivity probe level indication in the feed tank.

During operation, a system leak is detected by a rising liquid level in the pump room sump. The sump level indication is reviewed at the control room at least once each shift. A high level alarm sounds in the control room at 44 weight factor in. (111.8 cm) or 567 gal (2,146 L) and the high-high level alarm sounds at 47 weight factor in. (119.4 cm) or 614 gal (2,324 L).

After a spill, the pump room sump is part of the secondary containment subsystem. The spilled liquid flows by gravity to the sump and then out to the feed tank. The sump can then be steam jetted out to the 241-AW-102 Feed Tank and rinsed/backfilled with raw water.

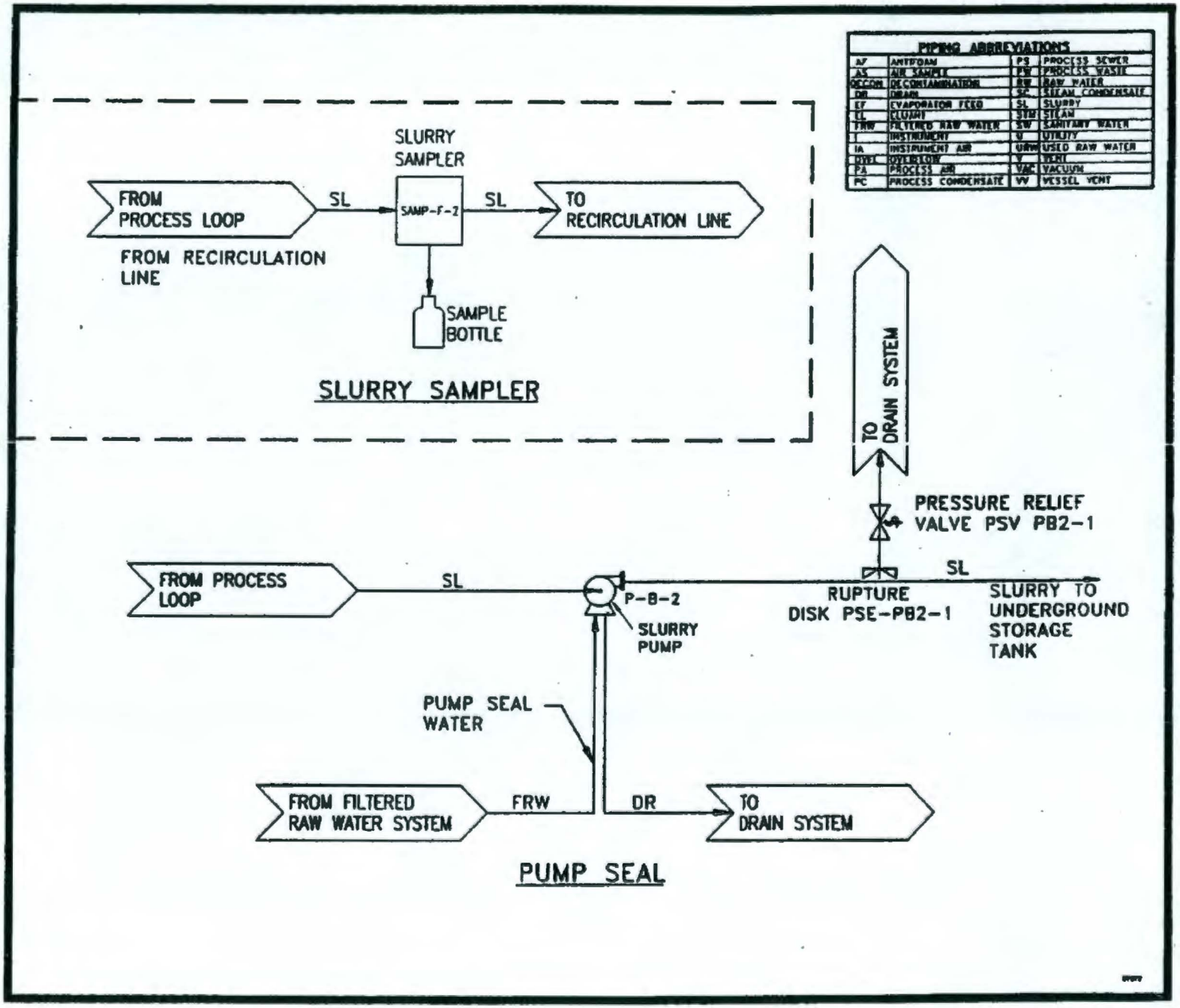

Figure 7. The 242-A Evaporator Process and Slurry Subsystem.

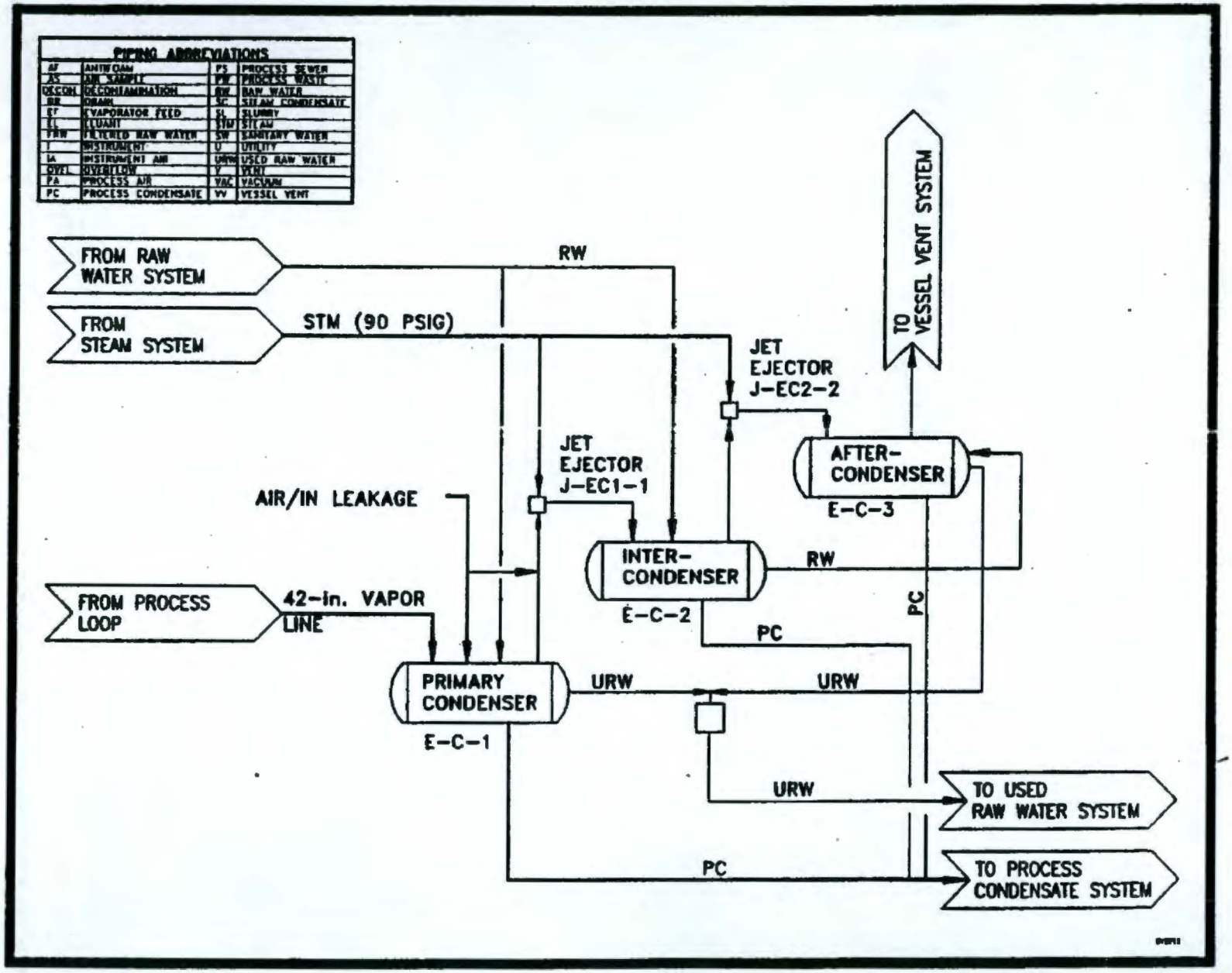

Figure 8. The 242-A Evaporator Vapor Condenser Subsystem.

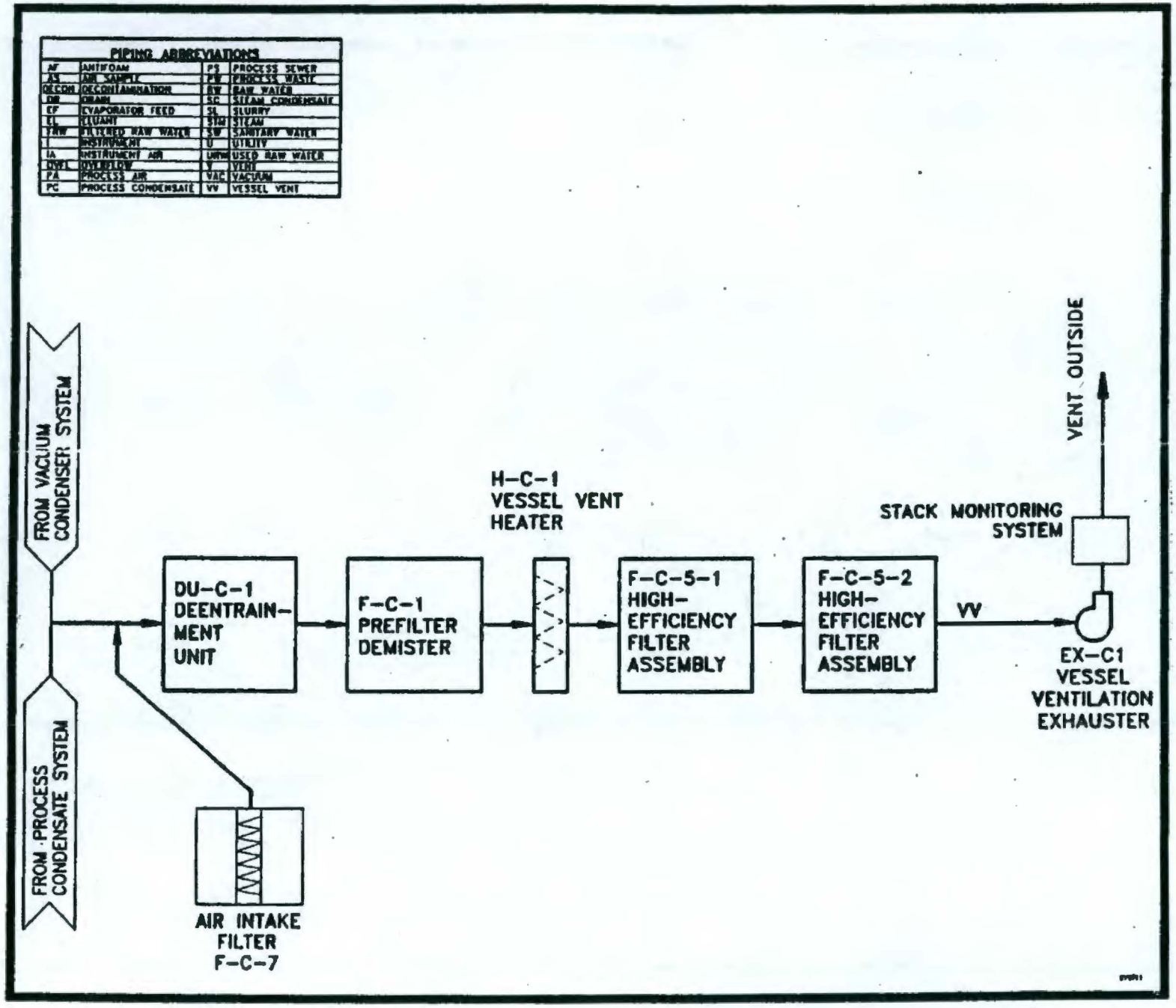

Figure 9. The 242-A Evaporator Vessel Vent Subsystem.

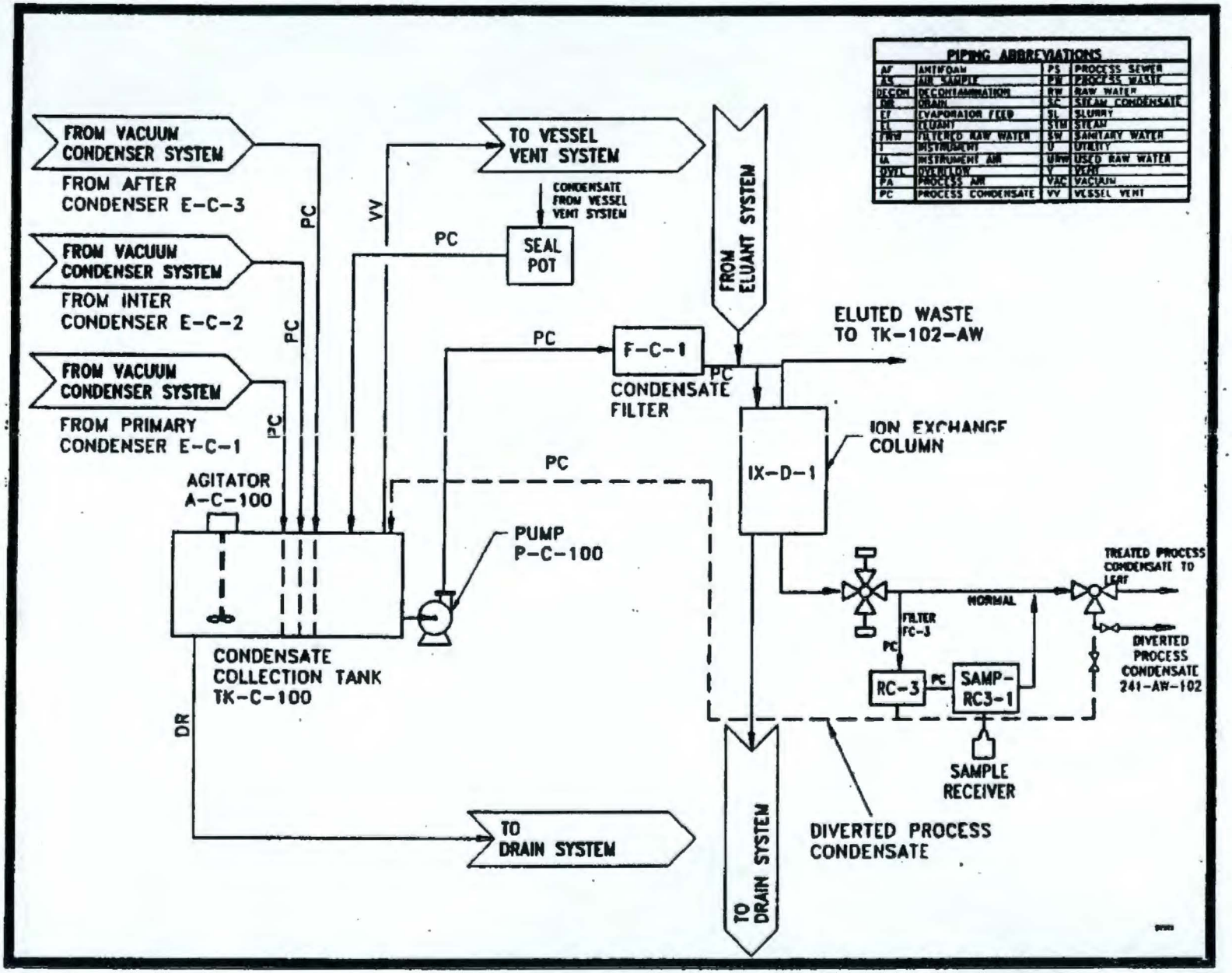

Figure 10. The 242-A Evaporator Process Condensate Subsystem.

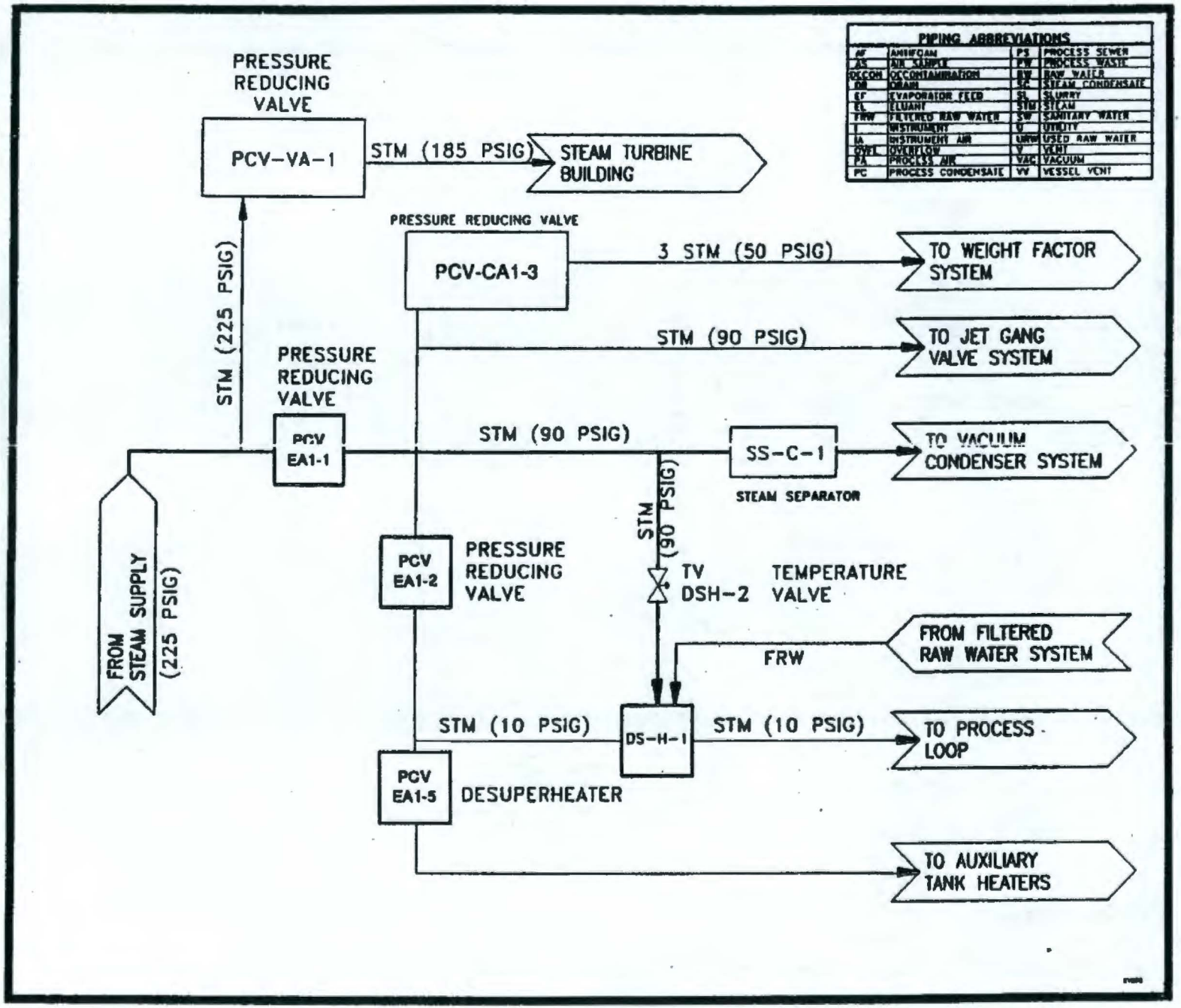

Figure 11. The 242-A Evaporator Steam Condensate Subsystem.

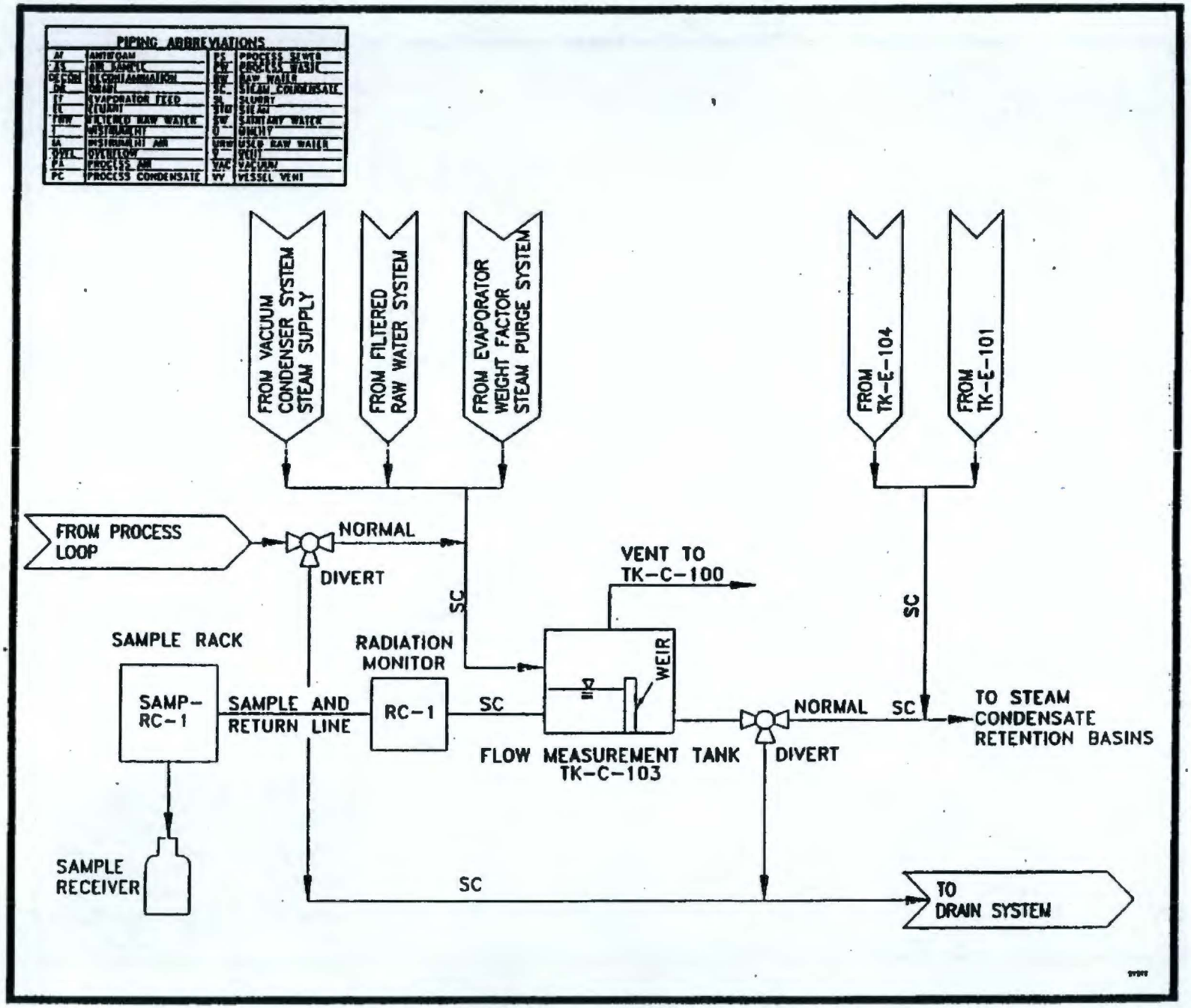

Figure 12. The 242-A Evaporator Steam Condensate Subsystem.

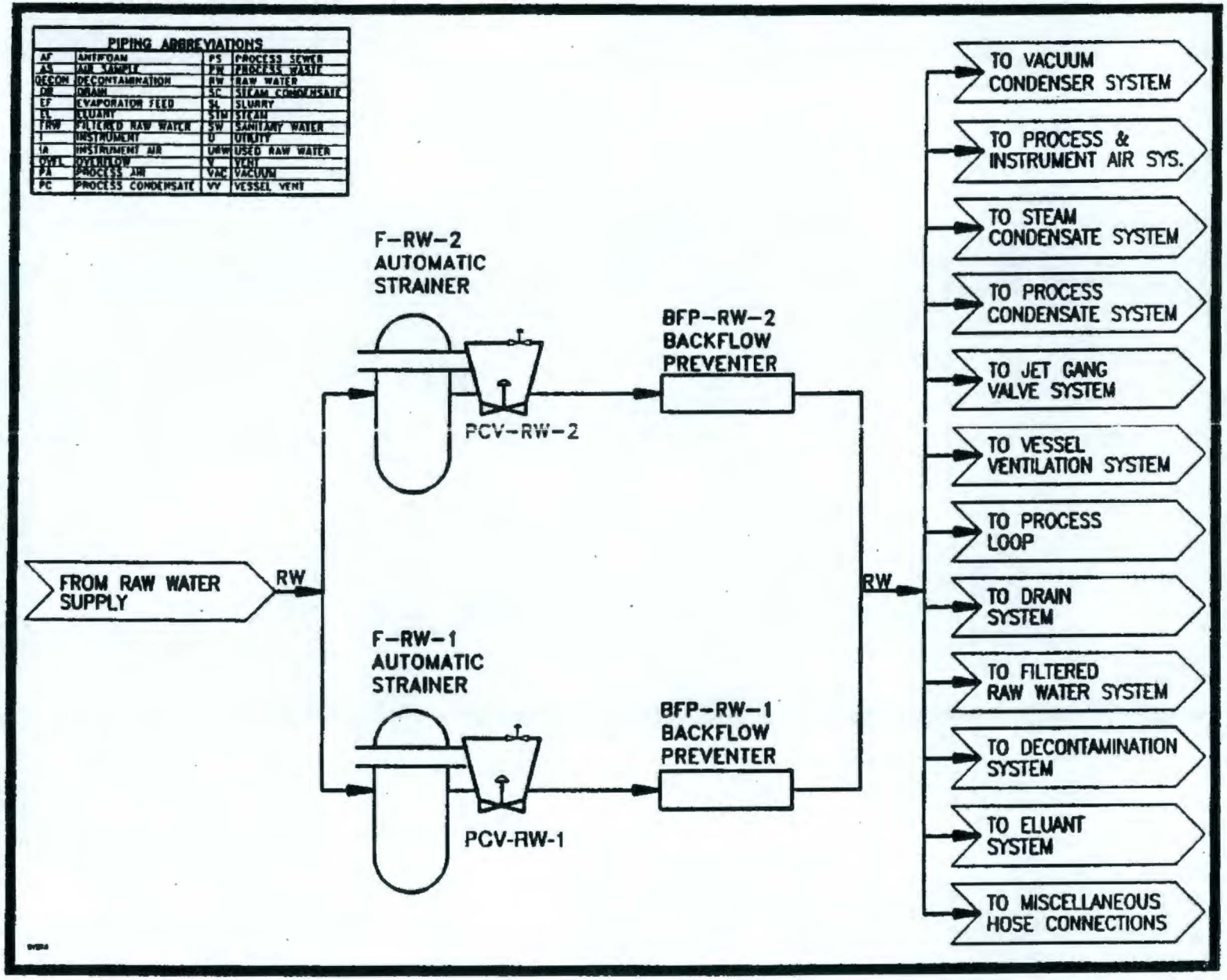

Figure 13. The 242-A Evaporator Used Raw Water Subsystem.

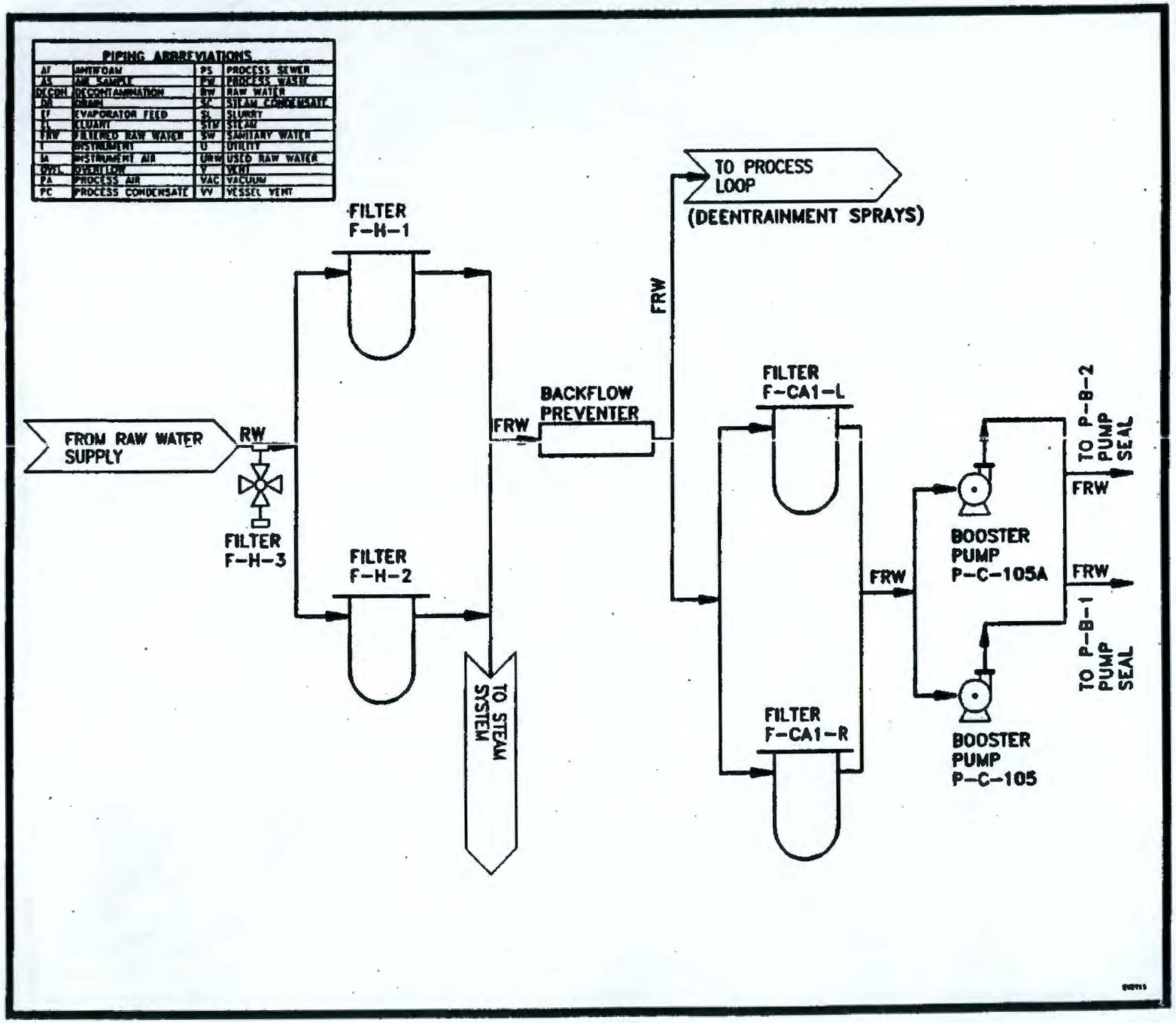

Figure 14. The 242-A Evaporator Used Raw Water Subsystem.

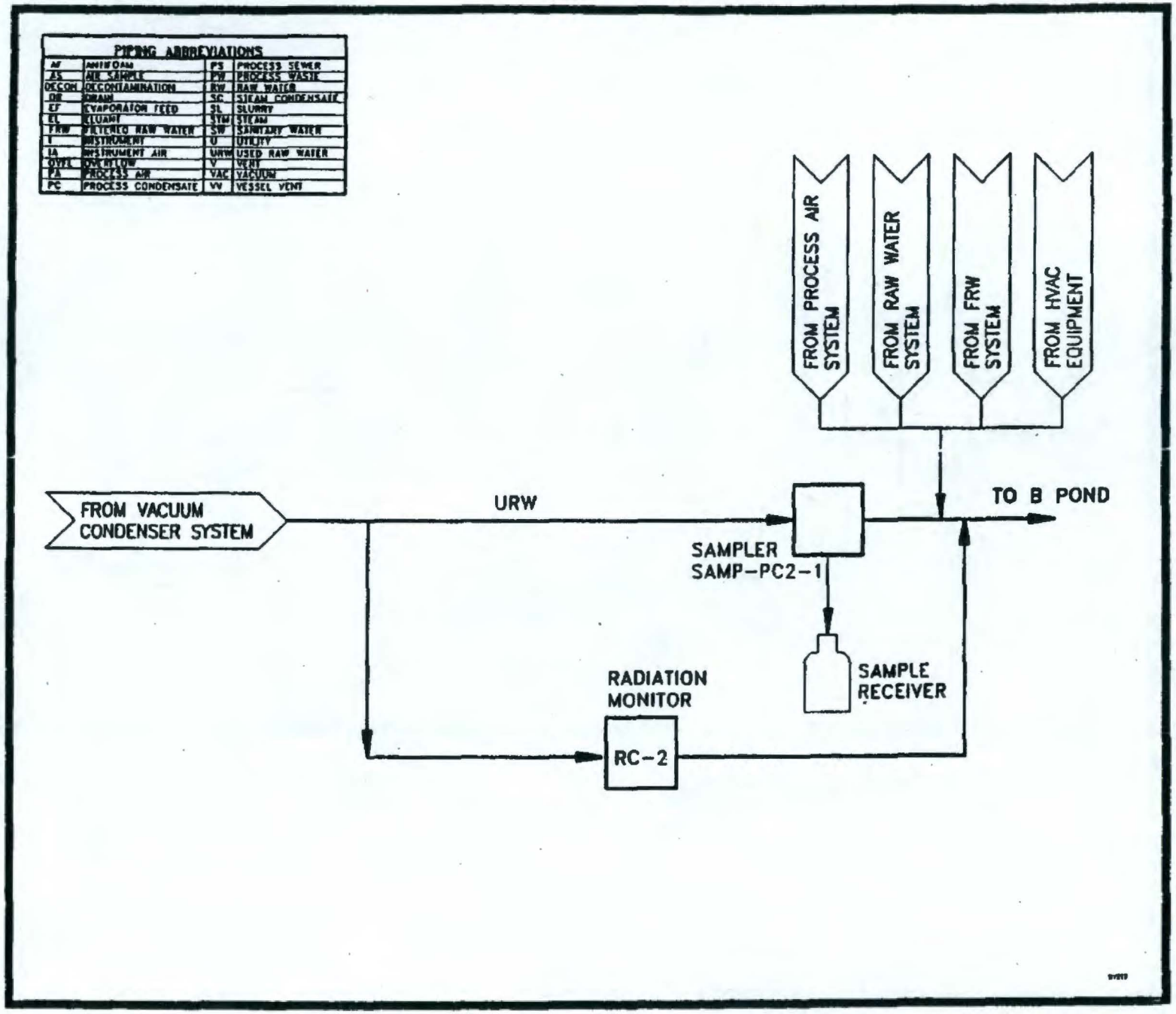

Figure 15. The 242-A Evaporator Used Raw Water Subsystem.

Figure 16. The 242-A Evaporator Building and Secondary Containment Subsystem.

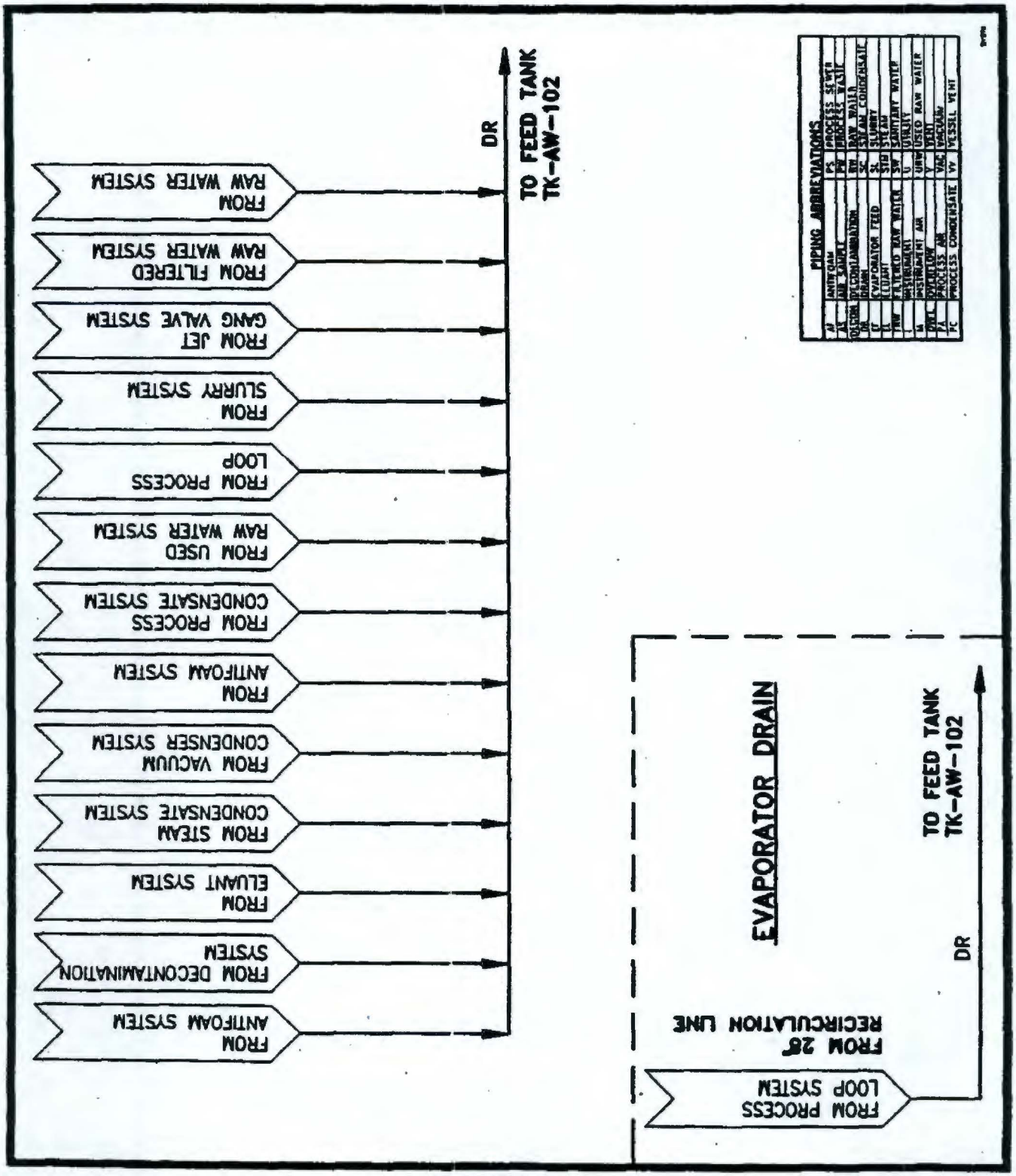

Figure 17. The 242-A Evaporator Building and Secondary Containment Subsystem.

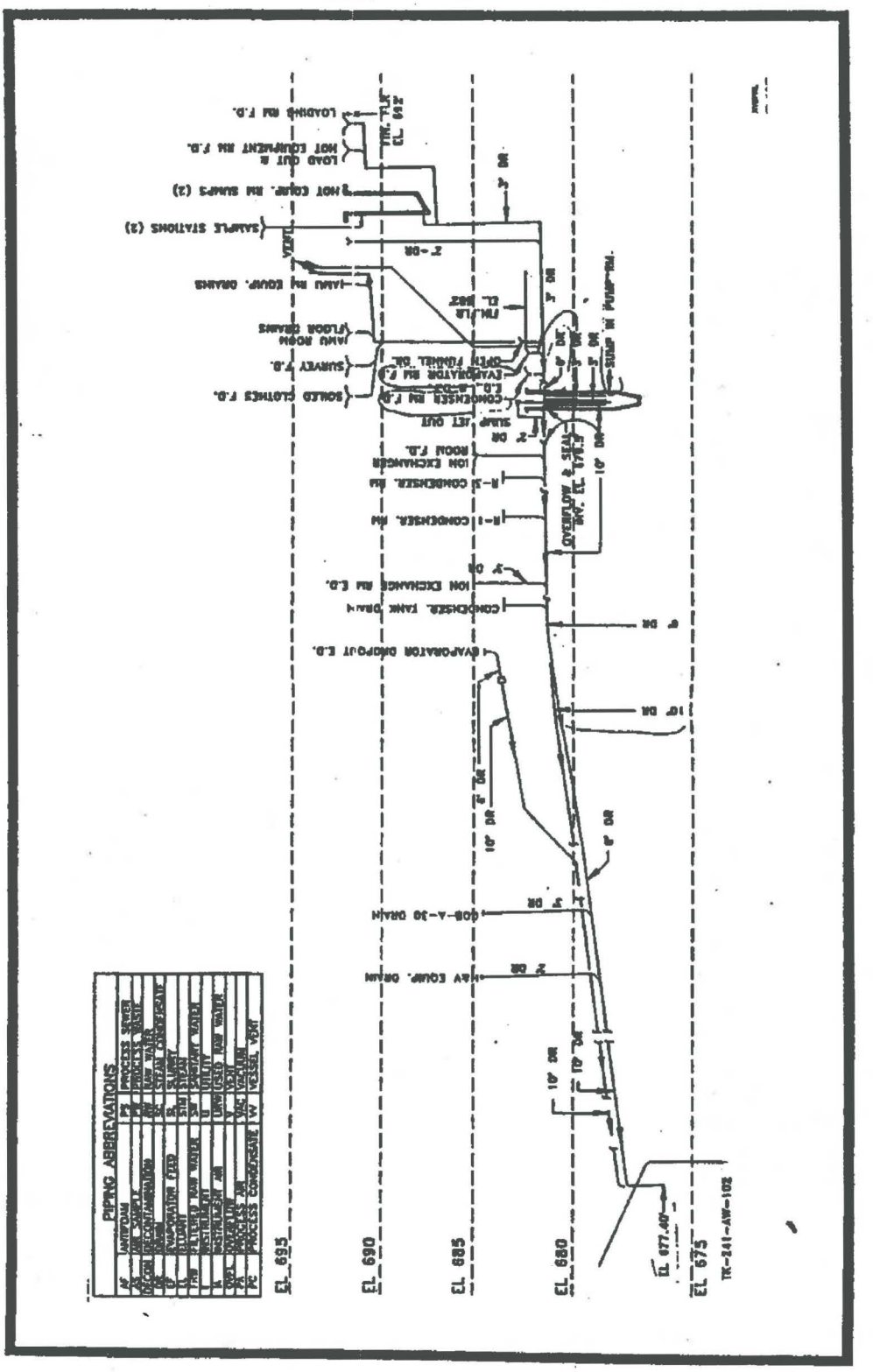

Figure 18. Pump Room Sump Schematic (Evaporator Building floor drains to the sump via 1 1/2 - 3 in. drain lines and a 10 in. overflow line flows by gravity to the AW-102 Feed Tank The sump is 5 ft x 5 ft x 6 ft deep).

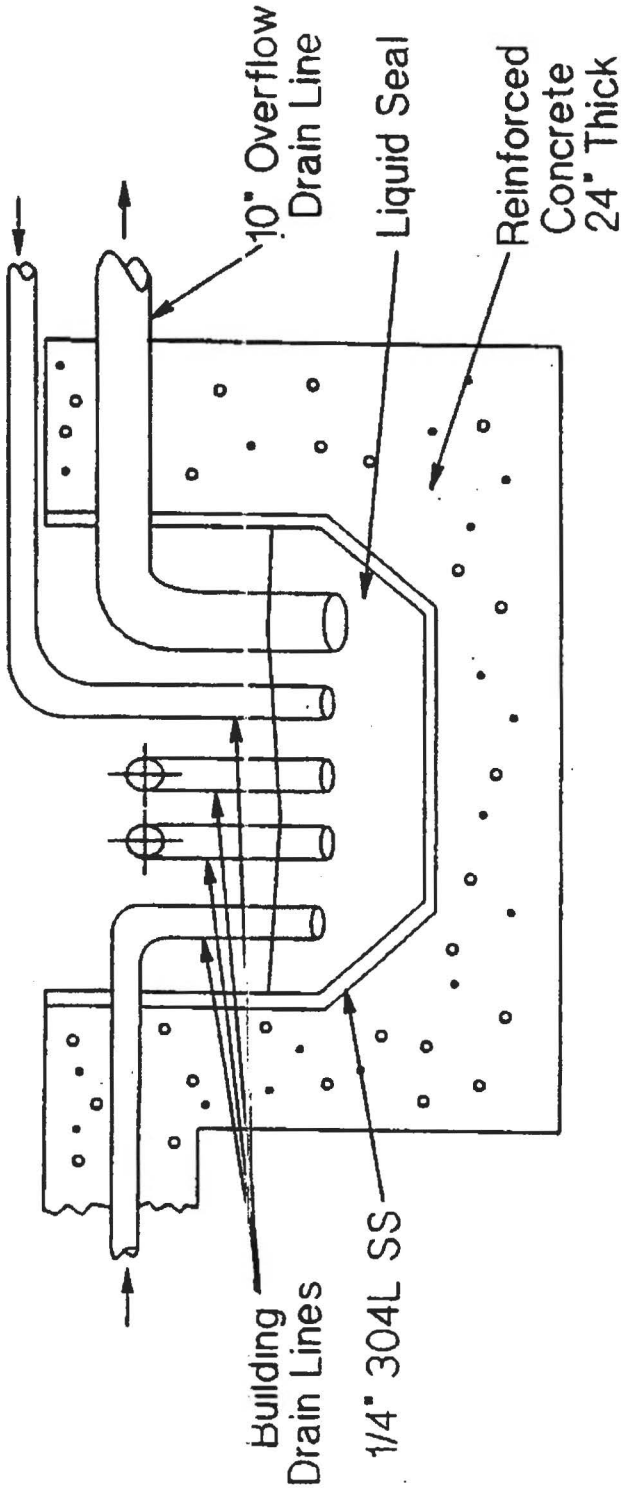

3.0 RESULTS AND DATA

Detailed data from inspections, tests and analyses that support this Integrity Assessment Report are compiled in WHC-SD-WM-DP-019, *Data Package for 242-A Evaporator/Crystallizer Tank System Integrity Assessment Report* (WHC 1993), hereinafter referred to as the Data Package. The table of contents for the Data Package is included as Appendix A of this report.

3.1 LEAK TEST

The TK-C-100 Condensate Catch Tank, and the Evaporator/Reboiler loop were both hydrostatically leak tested with water. Criteria for acceptability was no visible leaks over a 24 hour period.

The TK-C-100 Condensate Catch Tank passed the leak test without incident.

During the first leak test of the Evaporator/Reboiler loop, visual inspection (VT) revealed a leak of ≈ 0.6 l/hr (ten 1 ml drips/min emanating from a 2 in. thermowell connector gasket). On this basis, the system was deemed to have failed the leak test criteria of no visible leaks. Subsequently, the system was drained, the gasket replaced, and the test repeated. The system passed this repeat leak test.

Details and data sheets for the leak test inspections may be found in the Data Package, Section 2 (WHC 1993).

3.2 INSPECTION

The 242-A Evaporator facility and components were inspected by visual walkdown. Quantitative inspection of key system components and ancillary equipment was performed by Ultrasonic Testing (UT) for wall thickness.

3.2.1 Visual Walkdown

Critical portions of the Dangerous and Non-Dangerous Waste subsystems were examined for evidence of degradation and deformation due to corrosion, erosion, mechanical stresses, and fatigue. The major components inspected during the walkdown were:

C-A-1 Evaporator
E-A-1 Reboiler
E-C-1 Primary Condenser
E-C-2 Intermediate Condenser
E-C-3 Final Condenser
TK-C-103 Flow Measurement Tank
IX-D-1 Ion Exchange Column
TK-C-100 Condensate Catch Tank
Building and Secondary Containment.

Various sections of piping connecting these components together also were inspected. The walkdowns were performed by Westinghouse Hanford Company (WHC) Level II Quality Control (QC) personnel with American Society of Mechanical Engineers (ASME) Section XI inspection experience (VT-1, VT-3) and a WHC qualified walkdown engineer.

The results of the visual walkdown indicated that the general condition of the facility and the components was adequate for continued operation. The completed Walkdown Checklists and WHC Quality Assurance (QA) Surveillance Reports that were issued (WHC ISR#s R90-093 and R90-105) are included in the Data Package, Section 6 (WHC 1993).

3.2.2 Non-Destructive Examination

Wall thickness measurements were taken using UT at 2,350 points across 17 locations. All wall thicknesses were found to be greater than the minimum allowed by the applicable ASTM specification used to purchase the pipe and plate material. Table 1 shows the average wall thicknesses of the Evaporator/Crystallizer components measured. The raw UT data, along with plots of the average wall thickness-vs-grid location, can be seen in the Data Package, Section 6 (WHC 1993).

3.3 ANALYSIS

3.3.1 Structural Evaluation

No new comprehensive analyses were initiated for structural evaluation of the 242-A Evaporator/Crystallizer facility and components. Minimum allowable wall thickness calculations were performed for the TK-C-100 Condensate Catch Tank to ensure that the wall thicknesses measured by UT were within allowable tolerances (Huisingh 1992). As a separate effort in support of the Safety Analysis Report (WHC 1992a), summary seismic analyses were reviewed to ensure that the 242-A building structure could withstand a design basis earthquake (Scott 1992).

An off-normal Water Hammer Event occurred at the facility in February 1992 during operational testing. A complete discussion and analysis of the event is discussed in WHC-SP-0822, "242-A Evaporator Water Hammer Event Investigation." This report and associated analyses are included in the Data Package, Section 5 (WHC 1993). The analyses concluded that the event did not affect the integrity of the 242-A Evaporator/Crystallizer facility and components.

3.3.2 Corrosion Evaluation

A corrosion evaluation was performed that confirmed the compatibility of the Evaporator Complex materials with the potential corrosive environments. The following corrosive environments were analyzed: Evaporator Feed and DSSF, Process Condensate, Cooling Water, Steam Condensate, Evaporator Radiation Fields, Pump Room and Evaporator Room, and Hanford Soils. Corrosion controls

Table 1. Nondestructive Examination Results.

#	Locations(s)	Wall Thickness (cm)		
		Nominal[a]	ASTM minimum	Average Measured
1	Evaporator Vapor Line	0.793	0.678	0.808
2S	Evaporator Vapor Line	0.793	0.678	0.808
2T	Evaporator Vapor Line	0.793	0.678	0.810
3	Evaporator Shell	0.953	0.813	0.953
4	Recirc. Line Elbow	0.635	0.521	0.668
5	Recirc. Line Elbow	0.635	0.521	0.668
6	Reboiler Top and Bottom	0.635	0.521	0.633
7	Reboiler Top and Bottom	0.635	0.521	0.630
8A	Old E-C-1 Condenser	1.270	1.194	1.379
8B	Old E-C-1 Condenser	1.270	1.194	1.397
9	New E-C-1 Condenser	1.270	1.194	1.323
10	Steam Condensate	0.305	0.267	0.297
11	TK-C-100 Condensate Catch Tank[b]	0.793	0.41	0.808
12	E-C-2 Condenser	0.793	0.693	0.846
13	E-C-3 Condenser	0.818	0.716	0.876
14	IX-D-1 Ion Exchange	0.953	0.876	0.970
15	Slurry Drain Line	0.340	0.297	0.348
16	LERF Drain	0.549	0.480	0.538
17	E-C-1 to E-C-2	0.711	0.622	0.777

[a]Nominal wall thickness as defined by the Project B-100 construction and procurement specifications.

[b]Minimum allowable wall thickness for this component was calculated based on ASME allowable stresses using operating parameters (Huisingh 1992).

for the Evaporator include proper materials selection, design, and protective coatings. A detailed evaluation of 242-A Evaporator/Crystallizer corrosion protection was issued as a letter report (Ohl 1993).

The E-C-1 Condenser was replaced as part of the Project B-534 upgrades because of general pitting and crevice corrosion failures in the tube bundle. The E-C-1 Condenser uses poorly filtered, uninhibited raw water from the Columbia River for cooling water. The new E-C-1 (fabricated in 1976 as a

spare) has a similar design and similar materials and, therefore, is expected to have a similar useful life of 8 to 10 years with periodic outages and declining efficiency due to failed tubes[1].

The protective phenolic coating in the pump room and evaporator room was also replaced by the B-534 upgrades. This coating was damaged by mechanical abrasion during decontamination efforts at the beginning of the B-534 upgrades. The replacement coating system uses an acrylic primer and topcoat to protect the structural concrete. Vendor specifications for the new coating are included in the Data Package, Section 3 (WHC 1993).

[1]A separate project, W-252, is underway to install a closed loop cooling system with chemistry control capabilities to extend the operational life of the new E-C-1.

4.0 DISCUSSION

Washington State Dangerous Waste Regulations, *Washington Administrative Code* (WAC) 173-303, require integrity assessments of existing dangerous waste tank systems to consider the following, as a minimum:

(i) Design Standards
(ii) Dangerous Characteristics of the Waste
(iii) Existing Corrosion Protection
(iv) Tank System Age
(v) Results of a Leak Test, Internal Inspection, or Other Integrity Examination

4.1 DESIGN STANDARDS

Design Standards for the 242-A facility were considered as part of the integrity assessment. A copy of a letter report, (Moody 1993) which was issued to document the design standards evaluation is included in the accompanying Data Package, Section 4 (WHC 1993). Table 2 below provides a summary of the 242-A Evaporator/Crystallizer components and design standards.

4.2 DANGEROUS CHARACTERISTICS OF THE WASTE

The 242-A Evaporator/Crystallizer facility receives and treats Washington State dangerous waste (Categorized as "Extremely Hazardous Waste" by the part A permit application) (DOE-RL 1990) resulting from past Hanford defense production operations and segregates it into a concentrated Double Shell Slurry Feed (DSSF) and a dilute Process Condensate, both of which are also Washington State dangerous wastes. The Steam Condensate, Used Raw Water, and Noncondensable Gases generated by the evaporator process, through subsystems 3, 5, and 6, are not listed as dangerous wastes by Washington State.

Table 3 shows the bulk chemistry of the Evaporator Feed, Double Shell Slurry Feed, Process Condensate, Cooling Water, and Steam Condensate solutions (WHC 1992). Dangerous characteristics of the segregated waste streams are included in the Part A Permit (DOE-RL 1990).

4.3 EXISTING CORROSION PROTECTION

Existing corrosion protection for the 242-A Evaporator/Crystallizer facility consists of the materials and methods of construction and chemistry control of the liquid waste environments. Facility components and piping are constructed primarily of austenitic stainless steels (SS) and low alloy carbon steels (CS). Gaskets at component and piping connections are chemically resistant non-metallics (typically asbestos or polyamide). Each subsystem was designed for specific operating parameters and material/environment compatibilities.

Table 2. 242-A Design Standards. (sheet 1 of 2)

Component	Construction specification	Procurement specification	Functional design criteria	Code/standard	Comment
C-A-1 EVAPORATOR	B-100-C1	B-100-P1	ARH-2929-1	ASME Section VIII Div. 1, 1971 Edition, with Addenda through Summer 1973. Manufacturers Code Data Report ASME Form U-1 has been completed and the vessel is ASME code "U" stamped.	CVI File 20253
E-A-1 Reboiler	B-100-C1	B-100-P1	ARH-2929-1 & SD-534-FDC-001	ASME Section VIII Div. 1, 1971 Edition, with Addenda through Summer, 1973. Manufacturers Code Data Report ASME Form U-1 has been completed and the vessel is ASME code "U" stamped.	CVI File 20253
P-B-1 RECIRC PUMP	B-534-C1	B-534-P4	SD-534-FDC-001	Hydraulic Institute Standards, 14th Edition, Performance and hydrotesting in accordance with the test code section for centrifugal Pumps. ANSI B31.1 - 1986 Edition, Pressure component welding, weld inspection and welder qualification. AWS D1.1 - 86, Steel component welding and welder qualification. Uniform Building Code - 85, Earthquake requirements.	New installation per project B534 (CVI-21942, sup 1, shts. 82-365 and CVI 22098). Casing Material ASTM A744.
P-B-2 BOTTOMS PUMP	B-534-C1	B-534-P11	ARH-2929-1 & SD-534-FDC-001	Hydraulic Institute Standards, 14th Edition, Performance and hydrotesting in accordance with the test code section for centrifugal Pumps. ASTM Standards, Material certifications. AWS D1.1 - 86, Visual weld examinations. ANSI B31.1 - 1986, Welder qualifications.	New installation per project B534. CVI-22069-130 Supp. 95. Casing Material ASTM A744.
E-C-1 PRIMARY CONDENSER	B-100-C1	B-100-P1	ARH-2929-1	ASME Section VIII Div. 1, 1971 Edition, with Addenda through Summer, 1973. Manufacturers Code Data Report ASME Form U-1 has been completed and the vessel is ASME code "U" stamped.	Replaced original condenser by project B534 with unused spare condenser manufactured by Process Equipment Co., Inc. CVI 20253.
E-C-2 INTERMEDIATE CONDENSER	B-100-C1	--	ARH-2929-1	ASME Section VIII Div. 1, 1971 Edition, with Addenda through Summer, 1973. Manufacturers Code Data Report ASME Form U-1 has been completed.	Reference Shutte and Koerting Co., Spec. Sheet 72-T-018-J-1. Manufacturers Code Data Report ASME Form U-1 provided.

Table 2. 242-A Design Standards. (sheet 1 of 2)

Component	Construction specification	Procurement specification	Functional design criteria	Code/standard	Comment
E-C-3 FINAL CONDENSER	B-100-C1	--	ARH-2929-1	ASME Section VIII Div. 1, 1971 Edition, with Addenda through Summer, 1973. Manufacturers Code Data Report ASME Form U-1 has been completed.	Reference Shutte and Koerting Co., Spec. Sheet 72-T-018-J-1.
TK-C-100 CONDENSATE CATCH TANK	B-100-C1	HW-4311, Rev. 2	ARH-2929-1	ASME Section VIII Div. 1, Actual code year is unknown, Vendor Data implies 1949 to 1952 (Vessel is not ASME Code Stamped).	Construction drawings H-2-40704 & H-2-69357 indicate that the tank was modified sometime between 1974 and 1976 in accordance with ASME Sec. VIII Div. 1 requirements.
IX-D-1 Ion Exchange Column	B-100-C1	--	ARH-2929-1	Fabrication in accordance with ASME Section VIII Div. 1, 1971 Edition, with Addenda through Summer, 1973. Manufacturers Code Data Report ASME Form U-1 has been completed and the vessel is ASME code "U" stamped.	Reference Drawing H-2-69359
TK-C-103 CONDENSATE MEASUREMENT TANK	B-100-C1	--	ARH-2929-1	ASME Section VIII Div. 1, 1971 Edition, with Addenda through Summer, 1973.	Reference Drawing H-2-69370
SEAL POT LIQUID SEAL	B-100-C1	--	ARH-2929-1	ASME Section VIII Div. 1, 1971 Edition, with Addenda through Summer, 1973.	Reference Drawing H-2-69368
CONDENSATE PUMP P-C100	B-534-C1	V-B534 CEM4A-013	ED-534-FDC-001	Hydraulic Institute Standards, 14th Edition, Performance and hydrotesting in accordance with the test code section for centrifugal Pumps.	New pump provided by Project B-534 upgrades.
BUILDING STRUCTURE	B-100-C1	--	ARH-2929-1	UBC, 1970.	
SECONDARY CONFINEMENT DRAINAGE SUMPS	B-100-C1	--	ARH-2929-1	Sump steel liner fabrication in accordance with ASME Section VIII Div. 1, 1971 Edition, with Addenda through Summer, 1973.	Load out and hot equipment room sump shown on drawing H-2-69366. Pump room sump shown on drawing H-2-69369.
PIPING	B-100-C1	B-100-P1	ARH-2929-1	Process and service piping design, fabrication, installation and pressure testing in accordance with the rules of ANSI B31.1-1973, w/addenda B31.1a, 1b, & 1c-1973, Power Piping. Welder and welding procedure qualifications in accordance with Section IX, ASME Code. Non Destructive Examination (NDE) in accordance with Section VIII, Division 1 of the ASME Code.	

Table 3. 242-A Evaporator Bulk Chemistry Solutions.

Description	Units	Evaporator Feed	Double Shell Slurry Feed	Process Condensate	Cooling Water	Steam Condensate
pH	--	13.0	13.0	10.0	6.2	8.0
TOC	mg/L	3.3 E+03	4.6 E+03	2.6 E+02	1.7 E+00	1.1 E+00
TDS	mg/L	0.0 E+00	0.0 E+00	3.4 E-01	0.0 E+00	7.6 E+01
Alpha	µCi/Ml	0.0 E+00	2.9 E-11	5.7 E-11	8.1 E-10	6.5 E-10
Beta	µCi/Ml	0.0 E+00	3.6 E-10	6.8 E-13	1.0 E-08	0.0 E+00
AlO_2^-	mg/L	2.2 E+04	3.2 E+04	4.1 E+01	0.0 E+00	0.0 E+00
NH_4^+	mg/L	9.3 E+02	1.3 E+02	2.3 E+03	0.0 E+00	6.3 E-02
Barium	mg/L	9.8 E+00	1.4 E+01	3.0 E-02	3.0 E-02	3.1 E-02
Boron	mg/L	1.2 E+01	1.7 E+01	3.5 E-02	0.0 E+00	1.8 E-02
Calcium	mg/L	5.1 E+01	7.3 E+01	1.9 E+00	1.9 E+01	1.9 E+01
Cadmium	mg/L	1.1 E+01	1.6 E+01	3.1 E-02	2.0 E-03	0.0 E+00
$CO_3^=$	mg/L	8.7 E+03	1.2 E+04	2.4 E+01	0.0 E+00	0.0 E+00
Cl-	mg/L	4.5 E+03	6.4 E+03	2.4 E+01	7.8 E-01	1.1 E+00
Chromium	mg/L	4.2 E+02	6.0 E+02	3.4 E-02	1.0 E-02	0.0 E+00
Copper	mg/L	4.8 E+00	6.9 E+00	1.5 E-02	7.3 E-02	1.1 E-02
CN-	mg/L	3.4 E+01	4.8 E+01	9.5 E-02	0.0 E+00	0.0 E+00
F-	mg/L	2.7 E+02	3.9 E+02	4.3 E-02	0.0 E+00	1.3 E-01
Iron	mg/L	2.8 E+01	3.9 E+01	8.5 E-02	1.0 E-01	8.4 E-02
H_2	mg/L	1.6 E-11	1.7 E-11	2.0 E-11	0.0 E+00	0.0 E+00
OH-	mg/L	4.9 E+04	7.0 E+04	1.4 E+02	0.0 E+00	0.0 E+00
Lead	mg/L	5.1 E+01	7.0 E+01	4.6 E+00	1.3 E-02	5.5 E-03
Magnesium	mg/L	2.0 E+01	2.9 E+01	4.6 E-01	4.3 E+00	4.5 E+00
Manganese	mg/L	2.0 E+01	2.9 E+01	5.8 E-02	1.1 E-02	1.4 E-02
Mercury	mg/L	5.6 E+00	8.0 E+00	1.6 E-02	0.0 E+00	1.1 E-04
Molybdenum	mg/L	4.2 E+01	6.0 E+01	1.2 E-01	0.0 E+00	0.0 E+00
Nickel	mg/L	2.8 E+01	4.0 E+01	7.9 E-02	1.1 E-02	0.0 E+00
NO_3^-	mg/L	1.2 E+05	1.8 E+05	6.1 E+02	1.2 E+00	5.5 E-01
NO_2^-	mg/L	6.0 E+04	8.6 E+04	7.0 E+01	0.0 E+00	0.0 E+00
PO_4	mg/L	3.7 E+03	5.3 E+03	1.0 E+01	0.0 E+00	0.0 E+00
Phosphorus	mg/L	3.4 E+03	4.9 E+03	9.6 E+00	0.0 E+00	0.0 E+00
Potassium	mg/L	1.3 E+04	1.8 E+04	1.0 E+01	8.0 E-01	7.5 E-01
Silicon	mg/L	1.3 E+02	1.9 E+02	5.9 E-01	0.0 E+00	2.5 E+00
Sodium	mg/L	1.7 E+05	2.4 E+05	1.6 E+01	2.3 E+00	2.2 E+00
SO_4^-	mg/L	2.0 E+03	2.9 E+03	5.0 E+00	1.0 E+01	1.0 E+01
Tungston	mg/L	1.5 E+02	2.1 E+02	4.1 E-01	0.0 E+00	0.0 E+00
Uranium	mg/L	5.3 E+01	7.5 E+01	1.5 E-01	6.4 E-04	5.2 E-04
Zinc	mg/L	3.4 E+01	4.8 E+01	9.6 E-02	4.8 E-02	1.9 E-02

Portions of the concrete structure that may come in contact with the waste are protected with a special protective coating system (Carboline D3358/D3359).[2] The original coating system was damaged by mechanical abrasion during decontamination for the Project B-534 upgrades.

4.3.1 Environments

The corrosion evaluation compared the chemical resistance of the facility components with potentially corrosive environments found in the process. The environments evaluated included the waste feed and the various solutions and conditions that result from the evaporation process. Specific environments evaluated were:

- Evaporator Feed and Double Shell Slurry Feed
- Process Condensate
- Cooling Water
- Steam Condensate
- Radiation Fields
- Pump Room and Evaporator Room
- Hanford Soils.

Operating Temperatures for the 242-A Evaporator/Crystallizer range from 22 °C in the tube side (cooling water) of the E-C-1 Primary Condenser to 115 °C in the shell side (steam) of the E-A-1 Reboiler. The waste solution operates at between 35 °C and 93 °C in the C-A-1 Evaporator (Ohl 1990).

4.3.2 Materials

Materials used for the Evaporator components and piping include austenitic SS (primarily ASTM A240, Type 304L) and low alloy CS (primarily ASTM A53 and A106) with polyamide or asbestos gaskets at flanged connections. Building structure and secondary containment is made from ACI 301-72 Structural Concrete for Buildings and coated with a chemically resistant coating system. Table 4 shows the 242-A Facility piping and component materials.

Specific materials for each component can been seen in both the data package, [Data Package, Section 3 (WHC 1993)] and the Integrity Assessment Plan (WHC 1991).

---

[2]Carboline D3358/D3359 is a trademark of the Carboline Corporation.

Table 4. 242-A Facility Piping and Component Materials.

Item	Material specifications
C-A-1 Evaporator	ASTM A240, Type 304L SS
De-Entrainment Pads	AISI 304L SS
E-A-1 Reboiler	ASTM A240, Type 304L SS
P-B-1 Recirculation Pump	ASTM A240, Type 304L and 316 SS
P-B-2 Bottoms Pump	ASTM A240, Type 304L and 316 SS
E-C-1 Condenser	Shell: ASTM SA285, Grade C CS Tube Sheet: ASTM SA516, Grade 70 CS
E-C-2 Condenser	Shell: ASTM SA53, Grade B CS Head: ASTM SA515, Grade 300 CS
E-C-3 Condenser	Shell: ASTM SA53, Grade B CS Head: ASTM SA515, Grade 300 CS
TK-C-100 Condensate Catch Tank	ASTM A167, Type 347 SS (Modifications: ASTM A 312, Type 304L SS)
IX-D-1 Ion Exchange Column	ASTM A36 CS
TK-C-103 Tank	ASTM SA36 CS
M1 Piping	ASTM A53, TYPE E or S, Grade A or B CS or ASTM A106, Grade A or B, CS
M2 Piping	ASTM A53, TYPE E or S, Grade A or B CS or ASTM A106, Grade A or B CS
M5 Piping	ASTM A53, TYPE E or S, Grade A or B, CS or ASTM A106, Grade A or B, CS
M7 Piping	ASTM A53, TYPE E or S, Grade A or B CS or ASTM A106, Grade A or B CS
M8 Piping	ASTM A312, TP 304L SS
M9 Piping	Less than 12 in.: ASTM A312, GRTP 304L SS Greater than 12 in.: ASTM A240, GRTP 304L SS
M21 Piping	SS 304L, per HPS-124-M, SS
M24 Piping	ASTM A 53, Type S, Grade B CS or ASTM A106, Grade B CS
M25 Piping	ASTM A 53, Type S, Grade B CS or ASTM A106, Grade B CS
M27 Piping	ASTM A312, Type 304L SS
M31 (Tubing)	ASTM A269, Grade TP 304 0.035" Wall Thickness
M32 (Tubing)	Polyethylene, single line or bundled and sheathed in PVC.
M33 (Tubing)	Copper ASTM B68
M42 Piping	ASTM A53, Type E or S, Grade A or B CS or ASTM A106, Grade A or B CS
Building/Secondary Containment	ACI 301-72 Structural Concrete for Buildings
Pump Room Sump Liner	ASTM A240 304L SS

4.3.3 Compatibilities

Each of the environments was analyzed for the likelihood of specific corrosion mechanisms degrading each of the materials that come in contact with the environment. The specific corrosion mechanisms evaluated were:

- UNIFORM CORROSION/GENERAL DEGRADATION
- STRESS CORROSION CRACKING (SCC)
- PITTING CORROSION
- EROSION CORROSION
- CREVICE CORROSION
- GALVANIC ATTACK

4.3.3.1 Evaporator Feed and Double Shell Slurry Feed. Stress corrosion cracking, caustic cracking, crevice corrosion (pumps, elbows, flange connections), and pitting are all common corrosion failure mechanisms for SS vessels and components. The chemistry and environment of the 242-A Evaporator/Crystallizer contain some of the conditions necessary for initiation and propagation of these corrosion mechanisms. However, after seven years and nearly 16,000 hours of operation, no evidence of degradation was noted during the VT, UT, or leak test (Ohl 1993).

4.3.3.2 Process Condensate. The most likely attack for the components servicing the process condensate solutions is crevice corrosion in the C-A-1 Evaporator de-entrainment pads. The geometry of these pads lends itself to crevice corrosion, however, during operation, these pads are continuously washed with new condensate and the process design does not allow solutions to stagnate (Ohl 1993).

4.3.3.3 Cooling Water. A large amount of sludge was noted to have collected in the E-C-1 condenser as a result of using poorly filtered river water as the coolant. Areas of sludge build-up in the E-C-1 condenser are a likely location for localized pitting and crevice corrosion, particularly with the slightly acidic nature of the cooling water. The sludge build-up and corrosive nature of the river water can be dramatically reduced with a filtration and inhibitor system. Such a system would significantly increase the life expectancy of the new E-C-1 condenser in the current configuration. The new E-C-1 condenser is expected to perform similar to the last E-C-1 condenser with a life expectancy of about 10 years[3] (Ohl 1993).

4.3.3.4 Steam Condensate. SCC may be of concern in the shell side of the E-A-1 Reboiler because of the moderate chloride concentration (11 mg/L) and the elevated temperatures at which this component operates (115 °C). However, after seven years and 16,000 hours of operation, no evidence of any degradation (including SCC) was noted during the VT, UT, and Leak Test (Ohl 1993).

---

[3]A separate project (W-252) is underway to install a closed loop cooling system with chemistry control capabilities to extend the operational life of the new E-C-1.

4.3.3.5 Radiation Field. The lack of a strong neutron fluence in the 242-A radiation field makes damage to the SS and CS components of minor concern (Carlos 1993). The radiation dose to gasket materials was analyzed and found to be well below reported damage thresholds (Ohl 1993).

4.3.3.6 Pump Room and Evaporator Room. There are no unmitigated corrosion concerns associated with the pump room and evaporator room environments. The warm humid environment created in the pump room & evaporator room during operation was evaluated for potentially corrosive effects on CS and SS surfaces that may be continuously wetted by condensation. CS components exposed to this environment are painted to prevent uniform corrosion and SS components are inherently corrosion resistent.

The insulating blanket that covers the entire SS Evaporator/Reboiler loop was analyzed to ensure that the chloride concentration in the blanket material (10 to 18 mg/L) was below concerns for pitting and SCC (Ohl 1993).

4.3.3.7 Hanford Soils. There are no corrosion or degradation concerns with the Hanford soils for those portions of the facility that are within the scope of this integrity assessment[4]. Only the building structure is in direct contact with Hanford soils (Ohl 1993).

4.4 TANK SYSTEM AGE

The 242-A Evaporator complex was constructed in 1977 with an original design life of ten years (WHC 1992). The structure, piping, and majority of components were fabricated at that time.

The TK-C-100 Condensate Catch Tank was fabricated in 1951 as part of another project, however, it was not used on that original project. The condensate tank was upgraded in 1977 to be consistent with 242-A facility design standards (Moody 1993).

Selected portions of the facility have recently undergone upgrade or replacement under Project B-534. These components include:

Components	Year
E-C-1 Primary Condenser	1990
P-B-1 Pump	1990
P-B-2 Bottoms Pump	1990
Miscellaneous Piping	1990

The E-C-1 primary condenser replacement was fabricated in 1976 as a spare.

---

[4]Direct buried piping is assessed by the 241-AW Tank Farm Integrity Assessment for dangerous waste piping leading into the facility and by the LERF Integrity Assessment for dangerous waste piping leading out of the facility.

4.5 TANK SYSTEM LEAK TEST AND INSPECTION

4.5.1 Leak Test

4.5.1.1 C-100 Condensate Catch Tank. The C-100 Condensate Catch Tank and the Evaporator/Reboiler loop were both hydrostatically leak tested with water. Criteria for acceptability was no visible leaks over a 24 hour period (WHC 1992b).

The C-100 Condensate Catch Tank passed the leak test on the first attempt. Tank level was an indicated 95.7% at the start of the test. Since 1% on the indicator gage is equivalent to 167 gal (140 L), the starting indicated inventory was 15,982 gal (60,498 L). Tank level indications remained constant for the next 21 hours, and then dropped to a 95.6% indicated level, or 15,965 gal (60,434 L). The level indicators remained steady at this amount for the remaining three hours of the test. There was no visible sign of moisture or leakage during any of the 7 visual inspections during the 24 hour hold period. Water level remained at the overflow level at the end of the test. The maximum theoretical leakage that could have occurred during the hold period is 17 gal (64 L), based on readings taken from the electronic level gages. However, since no leakage could be visually detected on the vessel or concrete floor leading to the sump, it was concluded by QA and the 242-A Facility Cognizant Engineer that no actual leakage occurred, and that electronic drift in the level instrumentation (of one part in a thousand) was the cause of the instrument level change from 95.7% to 95.6% (Ruff 1993).

4.5.1.2 Evaporator/Reboiler Loop. During the first leak test of the Evaporator-Reboiler loop, visual inspection revealed a leak of ten drops per minute emanating from a 2-in. thermowell connector gasket. On this basis, the system was deemed to have failed the leak test criteria of no detectable leaks. Subsequently, the Evaporator/Reboiler Loop system was drained, the gasket replaced, and the test repeated. The system passed this repeat leak test.

During the second leak test, the starting liquid inventory in the system as indicated by the L1-CA1-3G level indicator was 27,413 gal (103,769 L). At the conclusion of the test 39 hours later, the final indicated inventory was 27,454 gal (103,924 L). Similar to the C-100 Condensate Catch tank, this 41 gal (155 L) discrepancy is attributed to electronic instrument drift.

Approximately 13 hours into the leak test, a portion of the facility ventilation shut down unexpectedly. This ventilation shutdown coincided with a 1,000 gal (3,785 L) drop in the indicated level in the C-A-1 evaporator vessel. Although the ventilation system was restarted a few minutes after its shutdown, the brief interruption in the building differential pressure apparently caused the initial 1,000 gal drop and continued level fluctuations over the twelve hour period immediately following the ventilation shutdown.

This explanation is consistent with expected changes in weight factor level indication following significant changes in the building differential pressure. During this period, no visible leaks were noted during the visual inspections and no level fluctuations were noted in the primary sump. The

criteria for acceptance was no detectable leaks over a 24-hour period (WHC 1992b). Based on the VT exams and the level indication in the sump, the Evaporator/Reboiler Loop passed the leak test. A complete discussion of the leak test results was issued as a letter report (Ruff 1993).

4.5.2 Inspection

The Evaporator/Crystallizer components were inspected qualitatively with a visual walkdown of the components and structural supports performed by a WHC Level II QC inspector with ASME Section XI experience (VT-1, VT-2) and a WHC qualified walkdown engineer. Deficiencies noted during the walkdowns included:

- Selected bolt and fastener replacement
- Misaligned pipe flanges
- Failed floor coating.

A detailed list of these deficiencies and corrective actions is included in the Data Package, Section 6 (WHC 1993). All corrective actions were completed as part of Project B-534.

Quantitative wall thickness measurements were also taken on critical components using Ultrasonic Testing (UT) at 2,350 points across 17 locations. The Evaporator/Crystallizer components are listed in Table 5 along with the potential degradation mechanism and the method of qualification.

Table 5 summarizes the 242-A components, potential degradation mechanisms and qualification methods. The failed components (Old E-C-1 Condenser and protective coating) were both considered failed by the facility before the walkdown/nondestructive examination (NDE) and were both replaced as part of the Project B-534 upgrades.

Table 5. 242-A Component Qualification.

Component	Potential Degradation	Pass/ fail	Qualification
C-A-1 Evaporator	Interfacial Pitting, SCC	Pass	UT
C-A-1 Condensate	Erosion, SCC	Pass	UT
Recirculation Line	Erosion, SCC	Pass	UT
E-A-1 Reboiler Shell	Erosion, SCC	Pass	UT
E-A-1 Steam Condensate	Erosion	Pass	UT
E-C-1 Shell (Old)	Uniform	Fail[a]	UT
E-C-1 Tubes (Old)	Uniform, Crevice	Fail[a]	Hydro Test
E-C-1 Shell (New)	(Baseline)	Pass	UT
E-C-1 Tubes (New)	(Baseline)	Pass	Hydro Test
E-C-1 Connection	Galvanic Attack	Pass	Visual
TK-C-100 Tank	Interfacial Pitting	Pass	UT
TK-C-100 Connections	Galvanic Attack	Pass	Visual
E-C-2 Shell	Uniform	Pass	UT
E-C-3 Shell	Uniform	Pass	UT
IX-D-1 Shell	Pitting	Pass	UT
Slurry Drain	Pitting	Pass	UT
Process Condensate Drain	Uniform	Pass	UT
E-C-1 to E-C-2 Line	Uniform	Pass	UT
Gasket Connections	General Degradation	Pass	Visual
Protective Coating	Mechanical Abrasion	Fail[a]	Visual
Concrete Structure	General Degradation	Pass	Visual

[a]Failed components were replaced or repaired under the Project B-534 upgrades.

5.0 QUALITY ASSURANCE

This integrity assessment was performed in accordance with an approved WHC work plan (WHC 1991) specific to this tank system. All work was performed and overviewed using existing procedures and guidelines established to provide appropriate controls for both analytical and physical work. The controls established are based on evaluations of risk to safety and environment which are based on DOE orders and both federal and state environmental laws and regulations.

The 242-A Evaporator/Crystallizer facility was evaluated, in accordance with WHC-CM-1-3, MRP 5.46, and found to be a Moderate Hazards Facility with Safety Class 2, 3 and 4 systems, components, and equipment and Safety Class 2 building structure (WHC 1992c). WHC uses a safety classification system to control items that affect health and safety of onsite and offsite individuals and the environment. Safety Class 1 and 2 items are systems, components, and equipment that deal with high consequence radiological and toxicological hazards. Safety Class 3 items are systems, components, and equipment that deal with low consequence radiological and toxicological hazards (similar to most private industry). Safety Class 4 items are non-safety related systems, components, and equipment.

Analytical work and reports were controlled through documented independent peer review and formal approval by QA, Environmental, Facility Operations, and Engineering organizations. Verification of physical work such as inspections and leak tests were documented on QC Surveillance and Inspections sheets.

In addition to internal company oversight, this integrity assessment solicited oversight by an Independent, Qualified, Registered Professional Engineer (IQRPE) for certification of the report contents and review of the corrosion evaluation by an internal (WHC) National Association of Corrosion Engineers (NACE) Certified Corrosion Specialist. The analyses, inspections, and tests were performed by personnel qualified by education, experience, and training. All WHC personnel involved with the leak tests and inspections received specific Hazardous Waste and OSHA training in accordance with 29 CFR 1910.120.

6.0 FUTURE INTEGRITY ASSESSMENTS

6.1 FUTURE INTEGRITY ASSESSMENT FREQUENCY

Based on the results of this integrity assessment, an assessment frequency of five years/8,000 hrs operation has been established. This is roughly one-half the interval between original construction and the first Integrity Assessment Report. A five year/8,000 hour frequency is appropriate for a 15 to 20 year old facility with inherent corrosion protection, stringent operational controls, and an aggressive preventative maintenance program.

The next Integrity Assessment Report will be due no later than July 15, 1998 (five years after submittal of this Integrity Assessment Report).

In the event of significant off-normal events such as earthquakes or major process upsets, procedures and mechanisms are in place through the DOE Order system to ensure orderly shutdown and complete review of facility fitness prior to restart.

6.2 FUTURE INTEGRITY ASSESSMENT SCOPE

The scope of future integrity assessments should include the process subsystems assessed by this report. In addition to WAC dangerous waste requirements, future integrity assessments should include:

- Complete visual walkdown of the facility and components for the types of degradation identified in section 4.5 of this report.[5]
- Repeat leak tests of Evaporator/Reboiler Loop and Condensate Catch Tank in accordance with an approved leak test procedure.
- Repeat Ultrasonic Testing for wall thickness of components using the same locations and grids. This data should be compared with the data included in the Data Package, Section 6 (WHC 1993) for trends.[5]
- Review of significant changes (if any) in national consensus codes and standards and DOE orders for design and construction of this facility.
- Review of off-normal operational events.

---

[5]Consideration should be given to the cost/benefit of repeat UT and VT for locations where accessibility and As Low As Reasonable Achievable (ALARA) dose rates may be prohibitive.

7.0 CONCLUSIONS, DEFICIENCIES, AND RECOMMENDATIONS

7.1 CONCLUSIONS

Overall, the inspections, tests, and analyses performed for this integrity assessment provide reasonable assurance that the 242-A Evaporator/Crystallizer tank system has adequate design, sufficient structural strength, and sufficient compatibility with the wastes to not collapse, rupture, or fail during service loads associated with normal operations. Specifically, this integrity assessment concluded:

- The 242-A Evaporator/Crystallizer tank system is not leaking within detectable limits.
- The 242-A Evaporator/Crystallizer tank system is fit for use.
- Both the original 242-A Evaporator/Crystallizer facility and the Project B-534 upgrades were designed, constructed, and installed in accordance with appropriate national consensus codes and standards and DOE Orders to adequately process Hanford defense wastes.
- The materials of construction, system design, and protective coatings for the 242-A Evaporator/Crystallizer tank system provide adequate corrosion protection and compatibility with Hanford defense wastes and the process streams generated within the facility.
- The water hammer event of February 1992 did not impact the integrity of the tank system or the ability of the system to function as designed.
- The facility design and construction provide adequate protection for the environment and for worker and public health and safety in the event of internal system failures and process upsets with the single possible exception of the primary sump which may require secondary containment.
- The pump room sump could not be demonstrated to comply with WAC 173-303-640(4) requirements for secondary containment. A liquid seal [420 gal (1,588 L)] between the Evaporator/Crystallizer and the feed tank is maintained in the sump at all times. Although the liquid is raw water, the sump and consequently the liquid seal are assumed to be contaminated with dangerous waste(s).

7.2 DEFICIENCIES

The pump room sump may not comply with WAC 173-303-640(4) requirements for secondary containment.

The pump room sump is alarmed with weight factor (differential pressure) level indication for leak detection and liquid in the sump can be jetted to a double shell tank farm in the event of a leak in the Evaporator/Crystallizer system. However, the liquid seal maintained between the Evaporator/

Crystallizer and the feed tank in the pump room sump is assumed to be contaminated with dangerous waste(s). A 0.25 in. (0.63 cm) SS liner inserted in 24 in. (61 cm) of concrete provides a single boundary containment of this liquid.

CORRECTIVE ACTION: Perform an engineering study to identify options for pump room sump compliance. The study should consider costs and benefits (including ALARA) of system upgrades to include secondary containment for the sump or redesign of the liquid seal versus a formal petition for a variance or equivalent secondary containment.

7.2.2 ROUTINE DISCHARGES THROUGH SECONDARY CONTAINMENT SYSTEM (BUILDING DRAINS)

The current facility configuration routinely discharges dangerous waste from facility support operations (Process Samples and Ion Exchange Column backflush) through secondary containment system.

DR-343-M24: Receives routine discharges from the RC-1, -2, and -3 samplers. These discharges occur when the samplers go through the vent and drain sequence. Total discharge ≈10 gal/mo (38 L/mo).

DR-350-M7: Receives routine discharges which are the result of sample bottle spray down operations in the F1 and F2 sampler systems. Total discharge ≈ 20 gal/mo (76 L/mo).

DR-338-M24: Receives routine discharges when the IX-D-1 Ion Exchange Column is backflushed. Bachflushes are performed as needed with total discharges ≈ 5,000 gal/mo (18,900 L/mo).

CORRECTIVE ACTION: Perform an engineering study to determine optimal re-routing of routine discharges in a compliant manner.

7.2.3 TRANSFER PIPING PENETRATIONS

Piping sections running through the 242-A building structure (≈22 in. [56 cm] reinforced concrete) are only single wall, i.e., no secondary containment.

Three sections of 242-A dangerous waste transfer piping pass through the 242-A building structure without compliant secondary containment.

- 6 in (15 cm) DR-335 (Bottom Dump) ≈7,500 gal/mo (28,400 L/mo)
- 2 in (5 cm) SL-167 (Slurry) ≈60 GPM (227 L/min)
- 3 in (8 cm) SN-269 (Feed) ≈120 GPM (454 L/min)

CORRECTIVE ACTION: Perform engineering study to determine risk of operation with penetrations in current configuration and alternatives for upgrade to compliant pentrations.

7.3 RECOMMENDATIONS

The following recommendations are not required for safety or environmental protection, nor do these recommendations constitute deficiencies requiring Washington State notification. These recommendations are made because of their potential programmatic impact.

- **Replace the chemically resistant special protective coating in the condenser room with a more durable coating.**

  The chemically resistant special protective coating used throughout the facility was damaged in the condenser room due to heavy use during the final stages of Project B-534 (foot traffic, dropped tools, etc.). The existing coating meets the requirements of WAC-173-303-640 (4)(e)(ii)(D), however, continual repair of this coating is expected to impact operation of the facility.

- **Obtain documentation and re-analysis (where necessary) of critical 242-A Evaporator/Crystallizer components and piping systems for seismic qualification.**

  Review of the project B-100 summary seismic analyses of the building structure in 1992 (Scott 1992) found that the building and secondary containment would survive a 0.25 g safe shutdown earthquake, therefore components would be allowed to fail without impacting safety or the environment. However, only partial seismic analyses for components and no seismic analyses for piping were retrieved from the B-100 project file archives.

  In addition, the P-B-1 Pump seismic analysis was not available from the pump vendor at the time of this report and two components, TK-C-100 Condensate Catch Tank and IX-D-1 Ion Exchange Column, were found to be lacking lateral restraints. Given the importance of this facility to the overall Hanford Site mission, confidence in the ability of the 242-A facility and components to function after a 0.125 g operating basis earthquake is of programmatic importance to the Hanford Site Mission.

8.0 REFERENCES

29 CFR 1910.120, "Hazardous Waste Operations and Emergency Response."

Brehm, W. F., and R. B. Pan, 1992, *Recommended Plan of Action for Evaluation of 242-A Water-Hammer Event* (internal memo 23480-92-12 to R. J. Nicklas, March 13, Westinghouse Hanford Company, Richland, Washington. (See WHC 1993, Section 5.1.)

Carlos, W. C., 1993, *PUREX Dangerous Waste Tank Radiation Compatibility Assessment*, WHC-SD-CP-EV-015, Rev. 0, Westinghouse Hanford Company, Richland, Washington, March 31, 1993.

DOE-RL, 1990, *242-A Evaporator, Dangerous Waste Permit, Part A Permit Application*, Rev. 3, U.S. Department of Energy, Richland Field Office, Richland, Washington.

DOE-RL, 1991, *242-A Evaporator Dangerous Waste Permit Application*, DOE/RL-90-42 Rev 0, U.S. Department of Energy, Richland Field Office, Richland, Washington.

Huisingh, J. S., 1992, *Minimum Required Thickness Calculations for Cylindrical Sidewall of TK-C-100*, (Letter Report to M. A. McLaughlin, December 30, 1992). (See WHC 1993, Section 6.9)

Moody, D. A., 1993, *242-A Evaporator/Crystallizer Tank System Design Standards Evaluation*, (Letter Report to M. A. McLaughlin, April 1, 1993 (See WHC 1993, Section 4.1).

Ohl, P. C., 1990, "Operating Parameter Calculations and References", Internal Memo #23460-90-105 to J. E. Geary, Westinghouse Hanford Company, Richland, Washington, August 22, 1990. (See WHC 1993, Section 7.1)

Ohl, P. C., 1993, *242-A Evaporator/Crystallizer Corrosion Evaluation*, (Letter Report to M. A. McLaughlin, April 5, 1993. (See WHC 1993, Section 3.1).

Rathbun, L. A., 1991, *Radiological Analysis Revisions for Pipe Gaskets at 242-A*, (letter report to E. S Ruff, September 16), Westinghouse Hanford Company, Richland, Washington (See WHC 1993, Section 3.4.)

Ruff, E. S., 1993, *242-A Evaporator/Reboiler Loop and Condensate Catch Tank Hydrostatic Leak Test Results* (internal memo to M. A. McLaughlin, February 8), Westinghouse Hanford Company, Richland, Washington. (See WHC 1993, Section 2.1.)

Scott, M. A., 1992, *242-A Evaporator Seismic Design Basis Evaluation*, WHC-SD-WM-ER-102, Westinghouse Hanford Company, Richland, Washington. (See WHC 1993, Section 4.4)

WAC 173-303, 1990, "Dangerous Waste Regulations," *Washington Administrative Code*, as amended.

WHC, 1991, *242-A Evaporator - Crystallizer Tank System Integrity Assessment Plan*, WHC-SD-WM-WP-062, Rev. 0A, Westinghouse Hanford Company, Richland, Washington.

WHC, 1992a, *242-A Evaporator/Crystallizer Safety Analysis Report*, WHC-SD-WM-SAR-023, Rev. 1, Westinghouse Hanford Company, Richland, Washington.

WHC, 1992b, *242-A Facility Evaporator and Catch Tank Leak Test Procedure*, WHC-SD-WM-TC-020, Rev. 0, Westinghouse Hanford Company, Richland, Washington. (See WHC 1993, Section 2.2)

WHC, 1992c, *Safety Equipment List 242-A Evaporator*, WHC-SD-WM-SEL-028, Rev. 0, Westinghouse Hanford Company, Richland, Washington.

WHC, 1993, *Data Package for 242-A Evaporator/Crystallizer Tank System Integrity Assessment*, WHC-SD-WM-DP-019, Rev. 0, Westinghouse Hanford Company, Richland, Washington.

APPENDIX A

DATA PACKAGE FOR 242-A EVAPORATOR/CRYSTALLIZER TANK SYSTEM INTEGRITY REPORT (WHC-SD-WM-DP-019) TABLE OF CONTENTS

This page intentionally left blank.

TABLE OF CONTENTS

1.0 EXECUTIVE SUMMARY 1.0-1

2.0 LEAK TESTS 2.0-1
- 2.1 242-EVAPORATOR/REBOILER LOOP AND CONDENSATE CATCH TANK HYDROSTATIC LEAK TEST RESULTS 2.1-1
- 2.2 242-A FACILITY EVAPORATOR/REBOILER AND CONDENSATE CATCH TANK LEAK TEST PROCEDURE 2.2-1
- 2.3 SUPPORTING CALCULATIONS 2.3-1

3.0 CORROSION EVALUATION 3.0-1
- 3.1 LETTER REPORT: 242-A EVAPORATOR/CRYSTALLIZER CORROSION EVALUATION 3.1-1
- 3.2 INSULATION PADS TEST REPORT FOR NRC 1.36 STRESS TEST 3.2-1
- 3.3 SPECIAL PROTECTIVE COATING SPECIFICATIONS 3.3-1
- 3.4 RADIOLOGICAL ANALYSIS REVISIONS FOR PIPE GASKETS AT 242-A . 3.4-1
- 3.5 CATALOG INFORMATION ON GARLOCK "BLUE-GARD" COMPRESSED GASKETING MATERIAL 3.5-1
- 3.6 RADIATION TESTING RESULTS ON VARIOUS STYLES OF GARLOCK "BLUE-GARD" COMPRESSED GASKETING MATERIALS 3.6-1
- 3.7 RADIATION EFFECTS ON ETHYLENE-PROPYLENE MATERIALS IN NUCLEAR PLANTS 3.7-1

4.0 DESIGN STANDARDS EVALUATION 4.0-1
- 4.1 242-A EVAPORATOR/CRYSTALLIZER TANK SYSTEM DESIGN STANDARDS EVALUATION 4.1-1
- 4.2 242-A EVAPORATOR FACILITY DRAWING LIST 4.2-1
- 4.2 242-A EVAPORATOR FACILITY DRAWING LIST 4.2-3
- 4.3 INSTRUMENT LIST -- LIQUID DRAINAGE SYSTEM 4.3-1
- 4.4 242-A SEISMIC DESIGN BASIS EVALUATION 4.4-1

5.0 242-A WATER HAMMER EVENT 5.0-1
- 5.1 RECOMMENDED PLAN OF ACTION FOR EVALUATION OF 242-A WATER HAMMER EVENT 5.1-1
- 5.2 EVALUATION OF THE 242-A EVAPORATOR FACILITY RAW-WATER SYSTEM DUE TO A WATER-HAMMER EVENT 5.2-1
- 5.3 IDENTIFICATION OF MATERIALS IN 242-A RAW WATER SYSTEM 5.3-1
- 5.4 ANALYSIS AND EVALUATION OF RAW WATER (RW) COOLING PIPING AND VALVES FOR CONDENSER E-C-1 IN THE 242-A EVAPORATOR . . . 5.4-1
- 5.5 RECOMMENDATION OF REFERENCE 1 REPORT FOR BACK PRESSURE VALVE HV-EC1-2 . . . . . 5.5-1
- 5.6 242-A RAW WATER INSPECTION/LEAK TEST 5.6-1
- 5.7 ADD SPACER TO HV-EC1-L ECN 171711 . . . . . 5.7-1
- 5.8 REMOVE FILTER/REG. FROM HV-EC1-2 AND ADD NEW FILTER 5.8-1
- 5.9 242-A - REPAIR LEAKS TO RAW WATER SYSTEM 5.9-1
- 5.10 242-A - PERFORM WORK PLAN ON RAW WATER SYSTEM 5.10-1
- 5.11 REPLACE FILTER/REG. ON HV-EC1-2 . . . . . 5.11-1
- 5.12 242-A EVAPORATOR WATER HAMMER EVENT INVESTIGATION WHC-SP-0822 . . . . . 5.12-1

TABLE OF CONTENTS (cont.)

6.0 INSPECTION/NONDESTRUCTIVE EXAMINATION 6.0-1
- 6.1 242-A EVAPORATOR/REBOILER SYSTEM EVALUATION - WORK PLAN 6.1-1
- 6.2 242-A TANK INTEGRITY ASSESSMENT DEFICIENCIES 6.2-1
- 6.3 242-A EVAPORATOR WALKDOWN, INSPECTION/SURVEILLANCE REPORT No.R90-093, Initiated 08/02/90 . . . . . 6.3-1
- 6.4 242-A EVAPORATOR WALKDOWN, INSPECTION/SURVEILLANCE REPORT No.R90-105, Initiated 10/03/90 . . . . . 6.4-1
- 6.5 ULTRASONIC THICKNESS MEASUREMENT PROCEDURE AND TEST REPORT Job No. 90-207, Request/Inst. No. 6306 (5 parts) 6.5-1
- 6.6 GRAPHS ILLUSTRATING MEASURED WALL THICKNESSES VS. ALLOWABLE WALL THICKNESSES 6.6-1
- 6.7 242-A EVAPORATOR INTEGRITY ASSESSMENT INSPECTION AND NONDESTRUCTIVE EXAMINATION RESULTS 6.7-1
- 6.8 COMPUTER PRINTOUTS OF ULTRASONIC WALL THICKNESS MEASUREMENT DATA 6.8-1
- 6.9 MINIMUM REQUIRED THICKNESS CALCULATIONS FOR CYLINDRICAL SIDEWALL OF TK-C-100 . . . . . 6.9-1
- 6.10 SPARE CONDENSER EC-1 LEAK/PRESSURE TEST AND WELD EXAMINATION FOR 242-A EVAPORATOR/CRYSTALIZER UPGRADE 6.10-1
- 6.11 CORRECTIVE ACTIONS AND DISPOSITIONS 6.11-1
- 6.12 TEST P-C100 OPERATION AND ION EXCHANGE COLUMN INTEGRITY . . 6.12-1

7.0 MISCELLANEOUS CORRESPONDENCE 7.0-1
- 7.1 OPERATING PARAMETER CALCULATIONS AND REFERENCES 7.1-1
- 7.2 242-A EVAPORATOR CORROSION EVALUATION REQUIREMENTS 7.2-1
- 7.3 ENGINEERING WORKPLAN FOR 242-A EVAPORATOR CORROSION EVALUATION 7.3-1
- 7.4 SPECIAL PROTECTIVE COATING FOR 242-A EVAPORATOR 7.4-1
- 7.5 PRELIMINARY FINDINGS OF THE 242-A EVAPORATOR FACILITY INTEGRITY ASSESSMENT 7.5-1
- 7.6 PRELIMINARY FINDINGS OF THE 242-A EVAPORATOR FACILITY INTEGRITY FUNDING 7.6-1
- 7.7 242-A INTEGRITY ASSESSMENT LEAK TEST 7.7-1
- 7.8 CLOSURE OF ISR# R90-093 . . . . . 7.8-1
- 7.9 242-A EVAPORATOR CORROSION ASSESSMENT 7.9-1
- 7.10 COMPLETION OF PROPOSED HANFORD FEDERAL FACILITY AGREEMENT AND CONSENT ORDER INTERIM MILESTONE M-32-05A 7.10-1
- 7.11 REVIEW COMMENT RECORDS 7.11-1

TSD #: T-2-6 , 242-A Evaporator

Document #: WHC-SD-WM-ER-124

Revision: 1

Date: 3/1/1994

Title: The 242-A Evaporator/Crystallizer Tank System Integrity Assessment Report

125073

Sent with Doc for metadata purposes.

RECEIVED
DEC 18 2018
EDMC