U.S. Department of Energy
Office of River Protection
P.O. Box 450, MSIN H6-60
Richland, Washington 99352

0070708

AUG 2 9 2006

06-WTP-122

Ms. Jane Hedges, Program Manager
Nuclear Waste Program
Washington State
Department of Ecology
3100 Port of Benton Blvd.
Richland, Washington 99354

RECEIVED
AUG 3 0 2006
EDMC

NOTICE OF CONCERNS FOR CLAMSHELL WELD REQUIREMENTS

References:
1. Ecology letter from S. Dahl, Ecology, to R. J. Schepens, ORP, and W. S. Elkins, BNI, "Notice of Concerns for Clamshell Welds Requirements," dated June 29, 2006.
2. WA7890008967, "'Dangerous Waste Portion of the Hanford Facility Resource Conservation and Recovery Act Permit for the Treatment, Storage, and Disposal of Dangerous Waste,' Chapter 10 and Attachment 51, 'Waste Treatment and Immobilization Plant.'"

This letter provides responses to the Corrective Measures for Concerns 2 and 3 of Reference 1. The Corrective Measure for Concern 2 required the submittal of evidence demonstrating that all documentation used for compliance with the record keeping criteria of American Society of Mechanical Engineers (ASME) B31.3, Section 344.2.2, has been modified to address all required in-process criteria listed in ASME B31.3, Section 344.7, for both vendor and field welding. The Attachment is documentation that satisfies Concern 2. This documentation consists of an updated "Bechtel Welding Document," 24590-WTP-MN-CON-01-001-08-01, Revision 15, and specification change notices that replace 5% in-process visual examination for field pipe jacket welds and vendor pipe jacket welds with 5% radiographic testing, with an exception for case-by-case allowance of visual in-process examination in accordance with ASME B31.3.

The Corrective Measure for Concern 3 required confirmation that plans and requirements for periodic pneumatic leak testing of secondary containment piping for the underground waste transfer lines and the embedded drain lines in the laboratory will be incorporated into the integrity assessment program in accordance with permit condition III.10.E.9.e.i. of Reference 2. In response to the Corrective Measure regarding Concern 3, the Waste Treatment and Immobilization Plant (WTP) design currently incorporates quick connections to pneumatically test leak detection boxes and the transfer pipe jacket. The U.S. Department of Energy, Office of River Protection, and Bechtel National, Inc. will develop plans and requirements to

pneumatically test, on a rotational basis, the secondary containment piping for the underground waste transfer lines and the embedded drain lines in the laboratory building. These plans and requirements will be incorporated into the integrity assessment program which is scheduled to be submitted in accordance with permit condition III.10.E.9.e.i.

If you have any questions, please contact me, or your staff may call Lewis F. Miller Jr., Acting Director, WTP Engineering Division, (509) 376-6817.

Roy J. Schepens, Manager
Office of River Protection

W. S. Elkins, Project Director
Bechtel National, Inc.

WED:MAR

Attachment

cc w/attach:
G. Duncan, BNI
W. S. Elkins, BNI
B. G. Erlandson, BNI
J. Hill, BNI
D. Klein, BNI
S. Harris, CTUIR
M. Anderson-Moore, Ecology
B. Becker-Khaleel, Ecology
L. J. Cusack, Ecology
S. L. Dahl, Ecology
K. Elsethagen, Ecology
J. Hensley, Ecology
P. Sobotta, NPT
L. K. Holton, Jr., PNNL
A. C. McKarns, RL
P. Peistrup, WGI
R. Jim, YN
Administrative Record
BNI Correspondence
Environmental Portal, LMSI

Bechtel Welding Document
Wd-3

R10534737

BECHTEL

WELDING DOCUMENTATION

WD-3

(Job 24590 Only)

Revision: 15

Construction Engineering & Technologies

Approved, Welding & NDE Services Manager

for Frank L. Hopple

4/29/06
Date

Table of Contents

1.0 SCOPE 3

2.0 ACRONYMS AND DEFINITIONS 3

3.0 WELDING & NDE STATUS LOG 4

4.0 FIELD WELDING DOCUMENTATION REQUIREMENTS 4

5.0 DEVELOPMENT AND IN PROCESS FLOW OF WELD INSPECTION RECORDS 5
- 6.0 Record Development 5
- 7.0 In-process Flow of the records 6

8.0 INSPECTION RESPONSIBILITIES 9

9.0 NONDESTRUCTIVE EXAMINATION REQUEST 9

10.0 QA RECORDS 9
- Appendix A- Page 1 of 5 10
- Field Welding Checklist (WR-25) 10
- Appendix B- Page 1 of 5 16
- Field Welding Checklist (WR-25a Socket Welds) 16
- Appendix C- Page 1 of 5 21
- Instructions for Field Welding Checklist (WR-25c) 21
- Appendix D- Page 1 of 4 25
- Instructions for Construction Weld Inspection Drawing Record (CWIDR) 25
- Appendix E- Page 1 of 2 29
- Nondestructive Examination Request 29
- Appendix F- Page 1of 3 31
- Welder Lot History Report 31
- Appendix G Page 1 of 4 33
- B31.3 - Allotment Definitions for Random Examination 33

ISSUED BY
MAY 17 2006
RPP-WTP PDC

15		Revised Appendix H
14	04/13/06	Revised as noted
13	11/29/05	Revised as noted
12	08/16/05	Revised as noted
11	03/24/05	Rewritten, no revision delta's used.
10	01/04/05	Revised as noted
9	09/01/04	Revised Table 1 as noted
8	03/10/04	Revised as noted

NO.	DATE	REVISIONS
7	10/02/03	Major Revision as noted
6	07/29/03	Revised as noted
5	05/14/03	Revised paragraphs dealing with Quality Level inspections
4	05/07/03	Revised TOC, Table 2 and as noted
3	01/23/03	Revised as noted
2	07/03/02	Revised as noted
1	03/14/02	Revised as noted – PCAR Version
0	12/07/01	Issued for Construction – LCAR Version

1.0 SCOPE

1.1 This standard provides the requirements for documenting the activities related to welding, and nondestructive examination of welds.

1.2 This standard applies to welds; weld repairs, base metal repairs and the welding and removal of temporary attachments. At the Lead Field Welding Engineer's option, this standard may be utilized to document temporary construction fabrication and fabricated rigging devices.

1.3 All welding authorized by Project Engineering on at least one of the following documents, Form 167, Form 167C, or other Engineering directive, shall be documented in accordance with this standard.

1.4 This standard includes sample forms to be used for documenting the welding, and examination processes. The use of the forms provides assurance that welding is performed and examined in accordance with specified procedures.

1.5 Quality Control inspection will be required for Quality Level (QL) welded items. Quality Control verification requirements are stated in construction procedure 24590-WTP-GPP-CON-7101, Construction Quality Control Program. In-process and closure welds will be documented as shown in Table 1.

2.0 ACRONYMS AND DEFINITIONS

2.1 FQCM – Field Quality Control Manager

2.2 QCE – Quality Control Engineer who is qualified and certified to perform verification of welding activities.

2.3 LFWE – Lead Field Welding Engineer

2.4 FWE – Field Welding Engineer

2.5 WPS - Welding Procedure Specification

2.6 BMR - Base metal repair

2.7 NDE – Non-Destructive Examination such as Radiographic Testing (RT), Magnetic Particle Testing (MT), Liquid Penetrant Testing (PT).

2.8 NP - Quality Level indicating Non-Permanent Plant that identifies the quality requirements to be applied to items and activities

2.9 CM - Quality level indicating Commercial grade that identifies the quality requirements to be applied to items and activities

2.10 QL- Quality Level designation that identifies the quality requirements to be applied to items and activities.

2.11 CWIDR – Construction Weld Inspection Drawing Record

2.12 FWCL - Field Welding Checklist

2.13 Teamwork's - Electronic Database utilized on this project to track status of weld completion and NDE.

2.14 FSK - Field Sketch

2.15 FPDC – Field Project Document Control

2.16 FCR - Field Change Request

2.17 FCN - Field Change Notice

3.0 WELDING & NDE STATUS LOG

3.1 Teamwork's will be the tool used to track the status of field welding.

3.2 Data pertaining to weld records and pressure piping weld status will be maintained in the teamwork's database. The data will be entered into Teamwork's as the weld record's are generated and upon completion of the work when the record is closed.

3.3 The data input is completed by a FWE or administrative assistant. Information recorded is from the work package, the FWCL, CWIDR, and the drawing used to locate the weld. For modeled piping much of the data is directly transferred electronically from the model. As Teamwork's is updated with record numbers and other field generated information the transferred data will be verified to be correct or corrected if required.

3.4 The "CONSTRUCTION RECORD table" will be maintained per project instruction and guidelines to indicate the appropriate record number and other pertinent data for all FWCL's and CWIDR's issued to document the inspections of field welding activities.

3.5 The "WELDS table" will be maintained for all permanent plant piping welds, piping attachment welds and other welds that require NDE in addition to visual examinations. When not input from the model, the data will be entered manually, using the FWCL as the basis for the data. Welds that are shown on weld maps, repairs, cut-outs, integrally attached pipe support components, and any piping on orthographic drawings are some examples of welds that will require manual data entry into the "WELDS table."

4.0 FIELD WELDING DOCUMENTATION REQUIREMENTS

4.1 The sample records shown in the appendices of this procedure (are samples) should be used to document inspection of field welding. NDE documentation shall meet the requrements of the applicable project NDE specification(s) and will be documenting any NDE that was performed, i.e. PT/MT reports, PMI reports, RT Reader sheets.

4.2 The instruction's for completing various inspection records are shown on the pages immediately following the sample record.

4.3 See section 7.0 for the in-process flow of the weld inspection record.

4.4 The FWCL Form WR-25 (Appendix A) shall be used to document piping weld inspection. This form will also be used for in-process examinations on closure welds and clamshell welds. The WR-25 will have all of the applicable signoffs for the in-process examination. It is initiated by the FWE during work package preparation. It shall be used at the discretion of the LFWE for temporary and NP piping welds.

4.5 The FWCL Form WR-25a (Appendix B) shall be used to document socket welded piping inspection. It is initiated by the FWE during work package preparation. It may be used at the discretion of the LFWE for temporary and NP piping welds.

4.6 The FWCL Form WR-25c (Appendix C) shall be used to document pipe supports, electrical supports, instrument supports, conduit supports, structural steel welding, and HVAC. It is

initiated by the FWE during work package preparation. It may be used at the discretion of the LFWE for temporary, NP, or construction aid welding.

4.7 Previously issued WR-25 records may be used in lieu of the current form numbering system. The form numbers do not have to be changed to the current system on existing records.

4.8 Alternatively, for non-piping welds a Construction Weld Inspection Drawing Record (Appendix D) may be utilized.

4.9 When allowed by other discipline installation procedures, the commodity installation inspection record may be used to document weld acceptance. No other weld inspection record will be required. Example's would be instrument tubing supports, conduit supports, cable tray supports, pipe supports (not including integrally welded attachments) and others as defined with-in the applicable discipline installation procedures

4.9.1When unique weld documentation is not required the discipline engineer should indicate in the work package that no weld records will be utilized.

5.0 DEVELOPMENT AND IN PROCESS FLOW OF WELD INSPECTION RECORDS

The Inspection records are divided into three sections.

5.1 General and Verification Requirements - The General and verification section is completed by the FWE for all weld records generated and must be signed or approved and dated prior to implementation in the field.

5.2 Recorded Results - The recorded results section will be signed off or approved as the inspection attributes are completed by the FWE or QCE as appropriate for the quality level of the item being inspected. This section of the WR-25 is used during verification activities of the applicable attribute. Items that are "Not Applicable" or "Not required" shall be marked as NA or NR. Those items that are indicated in Table 1 to be performed on a surveillance basis shall be initialed and dated when the verification is performed or an "NP" shall be entered indicating the verification was not performed.

5.3 Closure review - The closure review section is performed after all the field inspection and required NDE is completed. The closure review is the final verification that the work process was done correctly using correct procedures and revision's, with qualified welders, correct filler material etc. "Q" welding records will be reviewed by assigned QCE. Non-Q records will be reviewed by the assigned FWE and signed after acceptable review.

6.0 Record Development

During the preparation stage the FWE receives a scoped work package to develop any weld inspection records that will be required.

6.1 Most Girth Butt piping welds and integrally welded pipe support attachment welds will be issued on a WR-25 and each will be assigned unique record numbers. However, at the FWE discretion for field routed piping a single record number may be used for more than one girth butt weld.

6.2 Socket Welds may be issued on the WR-25a or WR-25 and may use one record number per drawing or weld map at the FWE discretion.

6.3 Pipe support welds may be issued on the WR-25c, unless otherwise covered by discipline installation cards, see paragraph 4.9. Each record shall utilize a unique record number.

6.4 Integral piping attachment welds for pipe supports should be shown on separate inspection records. This will facilitate timely record closure for release to hydro. These should be issued on WR-25 weld records.

6.5 Electrical supports, conduit supports, instrument supports, and structural and miscellaneous structural steel and HVAC welds will be issued on the WR-25c or CWIDR, unless otherwise covered by discipline installation cards, see paragraph 4.8. Multiple supports or welds may be documented using a single record number. The scope of each record should be clearly identified on the record or attached weld map. It should be coordinated with the responsible discipline field engineer to issue scoped records that may be closed in a timely manner to support subsequent activity, i.e. coatings, and concrete placement.

6.6 If NDE is required on these commodities the WR-25c should be used instead of the CWIDR as it more clearly demonstrates the completion and results of NDE.

6.7 Embed and grillage modification documentation shall be issued on a WR-25c. They should be scoped based upon embed stock codes and concrete pour numbers to facilitate timely record closure.

6.8 Welds not identified above will be documented on a record selected by the FWE. Consideration will be given to assign record numbers in a manner that will support the timely record closure to support the work process flow for that commodity.

6.9 The FWCL or CWIDR may be electronically or manually completed. They are to be prepared in advance by the FWE or designee for a given construction work package as per the instructions shown following the form. An original is prepared for each weld, or welds, as permitted by this procedure.

6.10 The FWCL or CWIDR will not be issued for use in the field until the QCE pre-issue review space is signed off.

6.11 At final review the original is signed in ink and is designated "Original", which is the QA copy of record.

6.12 Provisional back-up copies should be made from the "Original" after it has been completed. These copies may be maintained by the FWE and/or QC department.

6.13 Copies will be used to update Teamwork's and they may be used as a replacement if the originals are damaged, or lost. Alternatively electronic versions may be saved and re-printed and signed as required.

6.14 The LFWE or designee shall maintain a log to indicate the status of the weld records, NDE completion and record closure status.

6.15 The LFWE is responsible to maintain all originals prior to their issuance to the field.

6.16 The LFWE is responsible to maintain all originals after the final visual exam has been completed pending NDE completion and subsequent record closure. (See para. 3.3 and 3.4 for log to be used)

7.0 Process Flow of the records

7.1 FWCL's and CWIDR's shall be issued to the field in accordance with the guidelines of Appendix H. They will be maintained in the applicable package for availability to the welder/foreman when physical work (welding, grinding, PWHT, NDE) is being performed on the weld joint

7.2 The FWE ensures that the welder maintains the "Original" or hard copy of the FWCL or CWIDR in a protective plastic envelope or binder at, or as near as practical to, the weld joint to be made when work is being performed.

7.3 The FWCL or CWIDR is kept current with the progress of the weld based on signing off the applicable inspection attributes as they are verified. As verification occurs, any referenced procedure revision/FSK numbers shall be verified to be the latest .

7.4 New weld numbers entered on a WR-25, WR-25c or WR-25a will be initialed or approved and dated by FWE and QCE as applicable.

7.5 It is the craft's (welder/foreman) responsibility to notify the FWE or QCE of upcoming verification activities as the work progresses

If the weld is on a commodity where weld inspection has been delegated to the appropriate discipline engineer / QCE they will perform the final visual examination and document acceptance on the appropriate installation inspection record.

7.6 The welder shall return the FWCL or CWIDR to the work package it was taken from at the end of the shift or when they complete work on that item. The work package must be returned to the control point per appendix H.

7.7 When the weld is complete, visually inspected and ready for NDE, the FWE or QCE should flag the weld with ribbon/flagging or other means determined to be acceptable at the site. This will aid the NDE personnel in locating the weld in order to perform the required NDE.

7.8 For welds that are complete, pending NDE, the original FWCL or CWIDR and any attachments shall be pulled from the field by the FWE or QCE that accepted the weld.

7.9 Deleted.

7.10 When the weld requires NDE, it will be requested by the FWE or NDE coordinator in accordance with paragraph 9.0. They will use an NDE request form similar to that shown in Appendix E. Use of the form shown in Appendix E is neither required nor prohibited to obtain NDE.

7.11 When NDE is complete, the NDE subcontractor forwards the radiographs, radiographic reports and/or other NDE reports to the NDE coordinator assigned to track NDE completion. A Level II/III individual shall review the NDE report against the weld record and ensure that all information is legible, accurate, and complete. The appropriate block will be checked on the WR-25 to indicate acceptance and the appropriate NDE report number shall be annotated in the space provided.

The completed NDE report and associated product shall be processed as follows:

Radiographic Examination

Radiographs will be reviewed and evaluated by a qualified Level II/III. The reviewer /evaluator can be; Quality Control Engineer, Field Welding Engineer, or Approved Sub-Contractor.

If the Radiograph is reviewed/evaluated by a Field Welding Engineer, the reviewer will be independent of production of the weld, e.g. the reviewer will not be assigned to the same facility (BOF, HLW, LAW, LAB or PTF) as the weld itself.

If a Q Class Radiograph is reviewed/evaluated by a Field Welding Engineer, a qualified QCE Level II/III individual will perform a

surveillance of RT results including qualification of the FWE, independent of the FWE from the facility where the weld is located, and weld acceptability per the applicable NDE procedure. QC surveillance shall commence at 100% with reductive steps of 75%, 50%, 25%, 10%, and 5% (minimum) upon completion of 2 weeks review with no rejectable indications noted at the previous step. QCE will document the surveillance on the applicable NDE report. Surveillance results will be provided to the level III and FQCM. The FQCM may increase level of surveillances as appropriate.

Automated Ultrasonic Examination

UT data and weld quality will be reviewed and evaluated by a qualified Level II/III. The reviewer /evaluator can be; Quality Control Engineer, Field Welding Engineer, or Approved Sub-Contractor.

If the UT data and weld quality is reviewed and evaluated by a Field Welding Engineer, the reviewer will be independent of production of the weld, e.g. the reviewer will not be assigned to the same facility (BOF, HLW, LAW, LAB or PTF) as the weld itself.

If a Q Class UT is reviewed and evaluated by a Field Welding Engineer, a qualified QCE Level II/III individual will perform a surveillance of UT results including qualification of the FWE, independent of the FWE from the facility where the weld is located, and weld acceptability per the applicable NDE procedure. QC surveillance shall commence at 100% with reductive steps of 75%, 50%, 25%, 10%, and 5% (minimum) upon completion of 2 weeks review with no rejectable indications noted at the previous step. QCE will document the surveillance on the applicable NDE report. Surveillance results will be provided to the level III and FQCM. The FQCM may increase level of surveillances as appropriate.

7.12 If the weld is rejected, the FWE will prepare a new WR-25 to document the repair work. The new WR-25 follows the same flow as the original. Reference to the weld repair document shall be made on the original weld record. All repairs, associated documentation, and subsequent NDE shall reference the new weld number, i.e.: FW-5 R-1. The original weld record number will be used on all repairs and cut-out's due to rejected NDE.

7.13 For welds that required repair, the weld documentation turnover package shall consist of the original FWCL, the FWCL used for repair, and all associated NDE reports.

7.14 Due to record retention rules for welds that are cut-out, retention of the original FWCL, associated NDE reports, and attachments is required. They should be made part of the weld documentation turnover package, and marked in a manner to indicate the weld has been cut-out and reason for cut-out.

7.15 Deleted

7.16 For "Q" welds, when all NDE is complete, i.e. RT, and PT or PMI, for a weld the QCE will assemble the weld record documentation package for closure review and transmittal to PDC.

7.17 QCE completes their closure review, notifies/copies the applicable welding engineer and all welding record logs and databases are updated to reflect the closed status. Teamwork's will be updated prior to record submittal to PDC. The QCE transmits the weld record documentation package to PDC for permanent retention and storage.

7.18 For "CM" and "NP" welds, when all NDE is complete, i.e. RT, and PT or PMI, for a weld the FWE will assemble the weld record documentation package.

7.19 The FWE completes their closure review and ensures that all welding record logs and databases are updated to reflect the closed status. Teamwork's will be updated prior to record submittal to PDC. The FWE transmits the weld record documentation package to PDC for permanent retention and storage per appendix H requirements.

7.20 Any radiographic film will be transmitted to PDC for storage with the weld record documentation package. The film envelope should be marked to indicate the following as a minimum :

7.20.1 Applicable unique record number.
7.20.2 Applicable Drawing Number or Weld Map Number.
7.20.3 Applicable Weld Number.
7.20.4 Applicable NDE Report Number.
7.20.5 NDE Contractor Identification.
7.20.6 Reference to any other supporting RT reports that support the weld acceptance.
7.20.7 Initials and date of the individual who assembled the information.

7.21 For Film being retained to document welder qualification the original reader sheet and technique sheets shall be transmitted to PDC for storage with the film packet. As minimum they should identify the welder ID, WPS used for test and initials and date of the individual who assembled the information.

7.22 After closure review any backup copies of the WR-25 and originals of the WR-6 form may be disposed of.

8.0 INSPECTION RESPONSIBILITIES

8.1 The responsibilities for surveillance and inspection are summarized in Table 1.

9.0 NONDESTRUCTIVE EXAMINATION REQUEST

9.1 An NDE request form should be used to request all NDE (including PMI) for a weld. The Nondestructive Examination (NDE) Request form Appendix E is an acceptable form. Other versions may be used. It is to be routed to the subcontractor performing the examination. The FWE should maintain a copy of all NDE Requests until the NDE is completed.

9.2 It is Information Only form and is not a QA record. The subcontractor can extrapolate the information from this form to correctly complete their required examination report. The form may be completed manually or an electronic version may be used that addresses the items indicated.

10.0 QA RECORDS

10.1 Table 2 summarizes the various forms and records used to document welding, NDE, welder certifications, weld tracking, etc. It summarizes the applicable subsection of the Weld Control Manual the form is in and if the form will become a QA record. The table also identifies which forms are used for information only tools during the administration of the site welding program.

Appendix A- Page 1 of 5

Field Welding Checklist (WR-25)

Record No. : *(1)* Page of

Parent ID : *(2)* Quality Class : ☐ QL *(3)* ☐ CM ☐ NP

Facility : ☐ LAW ☐ PTF ☐ HLW ☐ WTP ☐ LAB ☐ BOF - *(4)* Area *(5)*

ISO: *(6)* Rev. Weld Map No: *(7)*

ISO: Rev.

System / Line Service *(8)* CWP No.: *(9)*

Configuration : *(10)* Pipe Class *(11)*

Pipe Dia *(12)* Wall "t" *(13)* Weld Type *(14)* WPS /Rev. *(15)*

Purge Reqd: *(16)* Preheat / Interpass *(17)* Filler Matl: *(18)*

☐ VT Fit-up ☐ VT Root Pass ☐ VT Final ☐ VT other VT per: *(19)*

RT per *(20)* ☐ 5% ☐ 100% ☐ Other ☐ PT per *(21)*

☐ MT per *(22)* ☐ PMI per *(23)* ☐ Other Per *(24)*

Weld Tag No: *(25)*

FWE Issued By *(26)* Date

QCE Reviewed By *(27)* Date

Attribute	FWE / Date	QCE / Date
NDE Complete on Inner Pipe	*(28)*	
Fit-Up OK	*(29)*	
Root Pass OK	*(30)*	
Interpass OK (Cleaning/Temp)	*(31)*	
VT other	*(32)*	
Final VT OK	*(33)*	
Welder ID	*(34)*	
NDE Lot History No	*(35)*	
Rod Heat Code	*(36)*	

RT ☐ Acc ☐ Rej Report *(37)*

PT ☐ Acc ☐ Rej Report *(37)*

MT ☐ Acc ☐ Rej Report *(37)*

PMI ☐ Acc ☐ Rej Report *(37)*

Other ☐ Acc ☐ Rej Report *(37)*

M & TE Serial No. *(38)*

M & TE Cal. Due Date *(38)*

M & TE Cal. Due Date *(38)*

Comments: *(39)*

Sample

FWE Closure Review / Date *(40)*

QCE Closure Review / Date *(41)*

WR-25 instructions

1.0 Complete the record number. The number may be obtained through PDC or construction technician.

2.0 Enter the applicable Parent ID. (For piping this will be the line number, preceded by the area designator)

3.0 Enter "a mark" in the applicable Quality class. Quality class is indicated on the design drawings. For those cases where the Quality class break is through a weld, utilize the more conservative level of the two classes listed. For example, the quality class break is shown through FW-1. Piping on one side of FW-1 is "QL-2", and the piping on the other side of FW-1 is "CM"; therefore, the weld will be classified as "QL-2" for inspection verification purposes. (CAUTION - For welds that are depicted at one end of the spool on the Isometric drawing, review the associated continuation drawing and utilize the more conservative of the two quality classes that are depicted. For example, Isometric 1 indicates "CM" piping. FW-1 is on one end of the piping line. The piping line continues to Isometric 2. The piping on Isometric 2 is depicted as "QL-1"; therefore, the weld will be classified as QL-1 for inspection verification purposes.)

4.0 Enter "X" in the appropriate Facility acronym (i.e. HLW, LAW, PTF,etc). For the BOF area add the specific facility name, not the system number (i.e. Chiller / Compressor not 225)

5.0 Enter area that welding is being performed in. On piping Isometrics the area may be found listed in the "Const. Work Area" block on the drawing. This is required for BOF only.

6.0 Enter the drawing and revision number.

7.0 If applicable, enter the weld map number (e.g. WM-1).

8.0 For piping utilize the system locator code that is a part of the Line Number or Drawing number and the Description of the . (i.e In line number – "PWD-PH-14905……" PH" is the System locator / code; In the drawing number "24590- PTF-P3-PWD-PH000-……." The PH is the System locator / code) PH stands for LAW Melter Feed. So if the ISO is 24590-LAW-PWD-PH00012002 the entry for block 8 would be "PH- LAW Melter Feed"

9.0 Enter the work package number used to control the work activity.

10.0 Enter the configuration of the weld, i.e. pipe to pipe, pipe to elbow, pipe to nozzle.

11.0 Enter the applicable Pipe class. For example C12U. When not applicable enter N/A, N/R, or None. The information may be located on the isometric in the block designated as "Pipe Spec".

12.0 Enter the NPS pipe size.

13.0 Enter the pipe wall thickness.

14.0 Enter the applicable weld type Acronym for the type weld to be made (e.g. GB for Groove Girth Butt). Attachment A pictorially represents the various weld types that may be encountered.

15.0 Enter the applicable Welding Procedure Specification (WPS) number and revision. As listed on the Form 167/167C. The revision number is obtained from the WPS that is contained in section 3 of the WCM. When the Form 167 allows more than one WPS several may be listed here.

16.0 When Purge is required enter Yes and the applicable purge gas required. When not required enter N/A, N/R or none.

17.0 Enter the required minimum Pre-heat / Maximum Interpass temperature. This information is obtained from the Form 167/167C, or the appropriate General Welding Standard.

18.0 Enter the ASME or AWS classification of the filler material to be used for the weld. This information is obtained from the WPS. (E.g. E-7018 or ER70S-2 / E-7018).

19.0 Enter the applicable VT examination procedure and revision number. The procedure number is obtained from the Form 167/167C. The procedure revision number is obtained from the VT procedure contained in Section 10 of the WCM. Also indicate with the appropriate placement of an "X" when Fit-up, Root pass, and/or Final VT is required. When another type visual exam is required enter description of inspection attribute in other.

20.0 If applicable, enter the applicable RT examination procedure and revision number. The procedure number is obtained from the Form 167/167C. The procedure revision number is obtained from the RT procedure contained in Section 10 of the WCM. Also indicate with the appropriate placement of an "X" whether 5%, 100% or other frequency is required

21.0 If applicable, enter the applicable PT examination procedure and revision number. The procedure number is obtained from the Form 167/167C. The procedure revision number is obtained from the PT procedure contained in Section 10 of the WCM.

22.0 If applicable, enter the applicable MT examination procedure and revision number. The procedure number is obtained from the Form 167/167C. The procedure revision number is obtained from the MT procedure contained in Section 10 of the WCM.

23.0 If applicable, enter the PMI examination procedure and revision number. The procedure number is obtained from the Form 167/167C. The procedure revision number is obtained from the PMI procedure contained in Section 10 of the WCM.

24.0 If applicable, enter the NDE procedure to be used. The procedure number is obtained from the Form 167/167C.

25.0 Enter the applicable Weld Number. This information is obtained from the weld map or isometric drawing. An alternate to issuing a weld map and associated numbers is to utilize a written description of the welds to be made. For example: Base plate to W-12. The preferred method is to use weld maps. If it is a weld that is to be completely cut-out and re-welded, add the "C" designator with a sequential number to the end of the current weld number (e.g., FW-12 C1). For a repair to a weld, add the "R" designator with a sequential number to the end of the current weld number (e.g., FW-12 R1). For piping use one weld number per WR-25 as practical, socket welded piping may have more than one weld per record at FWE discretion.

26.0 The FWE completing the form shall print their name, sign or approve and enter the date of approval.

27.0 The QCE shall review the pre-weld information entered by the FWE on the WR-25c for Q listed welds. Reference construction procedure 24590-WTP-GPP-CON-7101 Construction Quality Control Program. The QCE is verifying that the requirements entered comply with the requirements of the Form 167/167C, General Welding Standard and that the assigned procedures and references are correct. Any errors or omissions found shall be brought to the attention of the originator and corrected. When the QCE is satisfied that the pre-weld requirements are correct, the QCE will print their name and sign or approve and enter the approval date in the space provided. For all other quality levels or Non Permanent plant designated welds, QCE reviews, signs or approves and enters approval date attesting that for the welds referenced the correct Quality Level is represented on the form.

Results Section - Initialing (manually or electronically) and dating shall be performed at the time of verification and indicates the FWE and/or QCE release/acceptance of the attribute.

28.0 For dual containment piping this shall be initialed by the FWE or QCE when the NDE is complete and accepted on the Inner pipe. It shall be verified and initialed and dated before the shield pipe sections are fit-up.

29.0 The FWE or QCE shall check the following at the fit-up. The acceptance criteria are specified in the applicable General Welding Standard, General Purging Standard, and VT procedure referenced at item 19 and/or other design out-put documents/drawings. Also enter the welder's symbol in item 34 that made the tacks.

29.1 Cleanliness of the weld prep,

29.2 Cleanliness of immediate adjacent area,

29.3 Weld preparation geometry (if applicable and accessible),

29.4 Long seams marked or identified clearly,

29.5 Root openings with-in code or WPS allowable,

29.6 Tack welds acceptable,

29.7 Proper base materials are being used,

29.8 Correct filler material was used for tacks,

29.9 Preheat meets minimum requirement,

29.10 Joint Mis-match with-in code or WPS allowable,

29.11 Purge was acceptable, if required,

29.12 Verify that the welder that deposited tack welds was properly qualified.

29.13 On Socket welds measure the scribe line or actual pullback witnessed,

29.14 When scribe lines are not used, the actual insertion depth and pullback will be visually witnessed, and documented as such on the WR-25a

29.15 When scribe lines are used, verify that the distance between the scribe lines meets the minimum specified in GWS-2.

29.16 If scribe lines are not discernable at the time of final exam then the pull back will be considered unacceptable and the weld reworked.

30.0 When indicated, the root pass (accessible portion) shall be visually examined by the FWE or QCE. The acceptance criteria are specified in the applicable VT procedure referenced in item 19.

31.0 On NON In-process examinations the FWE or QCE shall initial and date when they verify that the maximum Interpass temperature was not exceeded. This verification may be made using temperature indicating crayons.
On In-process examinations the interpass will be signed off to show that all passes except the root and the cap are acceptable, this will include interpass cleaning and preheat/interpass temperature requirements.

32.0 The FWE or QCE shall sign off when the inspector has ensured that all variables listed on the applicable WPS are being monitored and in-process examinations were performed. This sign off is to be used for any in-process examinations

33.0 The FWE or QCE shall verify that the weld meets the final visual criteria and is released for any subsequent required NDE. As part of this verification, ensure that the weld number and welder ID has been marked near the weld via approved hard stamping or markers. The acceptance criteria are specified in the VT procedure referenced at Item 19. Welds requiring NDE should be flagged at this time to assist the NDE crew in locating.

33.1 The weld size, location and orientation was acceptable,

33.2 The base materials were the correct type,

33.3 Qualified welders made the weld,

33.4 Long Seams are clearly marked or identified on welds to be RT'd,

33.5 The correct weld filler material was used,

33.6 Any temporary attachment removal areas were acceptable.

33.7 After welding the final distance between scribe lines was acceptable. On socket welds GWS-2 requires scribe lines to be used to assure the minimum gap of ~ 1/16" and maximum of 1/8" prior to welding was achieved. The distance between scribe lines after welding will be verified. Where scribe lines do not exist at time of final exam contact LFWE for required action,

33.8 Stamping or permanent marker correctly identified the weld number.

33.9 The weld was visually acceptable per the applicable VT exam procedure.

33.10 The weld was suitable for any subsequent NDE.

34.0 The welder ID of all welders that welded on the joint shall be entered here. If tacks only it should be clearly annotated which welder performed only the tacks.

35.0 If applicable the RT or UT allotment identification shall be entered here for welds that are in random NDE allotments.

36.0 The heat code for the filler material used in the weld shall be entered here.

37.0 When the required NDE is completed, the NDE report number shall be entered here and the status indicated by checking or placing a mark in the appropriate block. The individual entering this information should initial and date when the entry is made. Note that any surface NDE-PT or MT should be complete and accepted before welds are released for RT, UT or PMI. All other NDE PT, MT, RT or UT should be completed and accepted prior to performing PMI testing on the weld.

38.0 If BNI Measuring and test equipment is used to accept the weld these fields shall be completed.

39.0 Enter any special or unique requirements or precautions that may pertain to the weld being made. For example: Hardness testing required for weld Number 6. Also, this space may be utilized as required to support the weld. Entries that affect the acceptance/rejection of a weld or drawing/specification revision changes may be made as appropriate by the FWE or QCE and shall be initialed (manually or electronically) and dated by the individual making the entry. Attempt to make entries brief, concise, and legible. If unique verification points are added via this section, areas for initials and dates shall be provided. The individual adding the unique verification point shall sign and date the addition. If more space than that provided is required, a separate sheet shall be utilized. When such a sheet is utilized, a reference shall be made to it in the remarks section, and it shall be attached to the WR-25. Changes that do not affect the weld such as editorial notes on weld location, weld head number or power supply do not have to be initialed and dated.

40.0 For CM and NP records the FWE reviews all information entered, including any additional sheets that were used, and any NDE documents. They verify that all of the stipulated requirements have been completed and are acceptable. As a minimum the review should encompass the following. When review is complete print their name and sign and date in the space provided.

40.1 All drawing and procedure revision's listed are current revision. If later revisions are found, evaluate the affect on the completed inspection / weld. If re-welding is required the weld may be added on to the current WR-25 or a new WR-25 issued indicating the weld as a "R-" or "C-" as appropriate. If re-inspection is required it shall be performed and signed off on the current WR-25. In either case, an explanation should be added in the remarks for the reason of the re-weld or re-inspection. If a change to the revisions has no impact on the welding or inspection criteria a "No Impact" statement shall be added.

40.2 Paginated correctly,

40.3 When multiple WPS were listed at block 15, indicate which WPS was used,

40.4 Bechtel RT interpretation sheets will be made part of the record,

40.5 Subcontractor NDE reports, PMI, PT and or MT will be made part of the record,

40.6 Subcontractor RT Techniques sheets will be made part of the record,

40.7 Weld maps will be made part of the record,

40.8 If repaired or cut out, the original weld paper and all associated repair and cutout record sheets and associated NDE documents will be made part of the record,

40.9 NDE records attached are completed acceptably,

40.9.1 Indicate acceptance status,

40.9.2 Are legible,

40.9.3 Report numbers are shown,

40.9.4 Signed by the appropriate certified individual,

40.9.5 Drawing and procedure revisions are the latest or revisions have been reviewed for impact to the completed examination. If re-examination is deemed required, it shall be performed and signed off on the current WR-25,

40.10 For welds in pipe classes that required Random NDE the weld record may be closed as long as the requirements described in Appendix "A "are acceptable for the RT allotment,

40.11 All appropriate blocks on the record completed and legible

40.12 All blocks are addressed on the record

40.13 Verify that correct WPS and NDE was utilized for the given weld.

40.14 Verify that the welder was currently qualified for the weld made i.e.: position, weld deposit thickness, pipe diameter, and weld process.

40.15 Any corrections are correctly made per site requirements.

40.16 Any remarks are clear, legible, understandable and initialed and dated.

41.0 For "Q" records the QCE performs all the items listed at Item 40. When review is complete print their name and sign and date in the space provided. NA may be entered in block 40 as FWE closure review of the record will only be randomly performed by the FWE on "Q" records.

42.0 When the FWE does perform that review it will be indicated by printed name and signature and date of the FWE who performed the review before the QCE receives the package.

Appendix B- Page 1 of 5

Field Welding Checklist (WR-25a Socket Welds)

RECORD No. 24590- (1) _____ Sheet _____ of _____

General and Verification Requirements: CWP No: (2) _____

Parent ID: (3) _____ Weld Map No. (4) _____ Facility (5) _____

System /Component (6) _____ Dwg No. / Rev. (7) _____ Pipe Class (8) _____

Area (9) _____ Quality Class (10) _____ WPS / Rev No (11) _____ Weld Type (12) _____

Filler Material (13) _____ Socket Weld Size (14) _____ VT Procedure / Rev (15) _____

Other NDE (16) _____

Issued By / Date (20) _____ QCE Review By / Date (21) _____

Print and Sign Print and Sign

Sample, Actual record will be a Landscape version

General and Verification requirements			Recorded Results								
Weld No. or Description	Pipe Size & Sch or wall t	Preheat / Interpass° F	Fit-up		Interpass Temperature		Final Visual		Welder Symbol	Heat Code	NDE Complete Acc or Rej
			FWE / Date	QCE / Date	FWE / Date	QCE / Date	FWE / Date	QCE / Date			
(17)	(18)	(19)	(22)		(23)		(24)		(25)	(26)	(27)

Remarks : (28)

M&TE ID : (29)	M&TE Cal. Date	M&TE Cal Due Date

Closure Review FWE / Date (30) _____ Closure Review QCE / Date (31) _____

Print and Sign Print and Sign

This form is primarily intended for socket welded piping, but if the drawing or weld map includes different types they may be entered on this record at the FWE discretion.

1.0 Complete the record number. The number may be obtained through PDC or construction technician.

2.0 Enter the work package number used to control the work activity.

3.0 Enter the applicable Parent ID. (For piping this will be the line number, preceded by the area designator)

4.0 If applicable, enter the weld map number (e.g. WM-1).

5.0 Enter the appropriate Facility acronym (i.e. HLW, LAW, PTF,etc). For the BOF area add the specific facility name, not the system number (i.e. Chiller / Compressor not 225). This is required for BOF only.

6.0 For piping utilize the system locator code that is a part of the Line Number or Drawing number and the Description of the System locator / code . (i.e In line number – "PWD-PH-14905……" PH" is the System locator / code; In the drawing number "24590- PTF-P3-PWD-PH000-……." The PH is the System locator / code) PH stands for LAW Melter Feed. So if the ISO is 24590-LAW-PWD-PH00012002 the entry for block 8 would be "PH- LAW Melter Feed"

7.0 Enter the drawing and revision number.

8.0 Enter the applicable Pipe class. For example C12U.The information may be located on the isometric in the block designated as "Pipe Spec".

9.0 Enter area that welding is being performed in. On piping Isometrics the area may be found listed in the "Const. Work Area" block on the drawing. For other applications use a general description i.e. "HLW el +3'-0".

10.0 Enter the applicable Quality class. Quality class is indicated on the design drawings. For those cases where the Quality class break is through a weld, utilize the more conservative level of the two classes listed. For example, the quality class break is shown through FW-1. Piping on one side of FW-1 is "QL-2", and the piping on the other side of FW-1 is "CM"; therefore, the weld will be classified as "QL-2" for inspection verification purposes. (CAUTION - For welds that are depicted at one end of the spool on the Isometric drawing, review the associated continuation drawing and utilize the more conservative of the two quality classes that are depicted. For example, Isometric 1 indicates "CM" piping. FW-1 is on one end of the piping line. The piping line continues to Isometric 2. The piping on Isometric 2 is depicted as "QL-1"; therefore, the weld will be classified as QL-1 for inspection verification purposes.)

11.0 Enter the applicable Welding Procedure Specification (WPS) number and revision. As listed on the Form 167/167C. The revision number is obtained from the WPS that is contained in section 3 of the WCM. When the Form 167 allows more than one WPS several may be listed here.

12.0 Enter the applicable weld type Acronym for the type weld to be made (e.g. GB for Groove Girth Butt). Attachment A pictorially represents the various weld types that may be encountered.

13.0 Enter the ASME or AWS classification of the filler material to be used for the weld. This information is obtained from the WPS. (E.g. E-7018 or ER70S-2 / E-7018).

14.0 Enter the required weld size, rounded up to the closest 1/16". This can be determined from GWS-2.

15.0 Enter the applicable VT examination procedure and revision number. The procedure number is obtained from the Form 167/167C. The procedure revision number is obtained from the VT procedure contained inSection 10 of the WCM.

16.0 If applicable, enter the NDE procedure to be used. The procedure number is obtained from the Form 167/167C. The procedure revision number is obtained from the PMI procedure contained in Section 10 of the WCM.

17.0 Enter the applicable Weld Number. This information is obtained from the weld map or isometric drawing. An alternate to issuing a weld map and associated numbers is to utilize a written description of the welds to be made. For example: Base plate to W-12. The preferred method is to use weld maps. If it is a weld that is to be completely cut-out and re-welded, add the "C" designator with a sequential number to the end of the current weld number (e.g., FW-12 C1). For a repair to a weld, add the "R" designator with a sequential number to the end of the current weld number (e.g., FW-12 R1). For piping use one weld number per WR-25 as practical, socket welded piping may have more than one weld per record at FWE discretion.

18.0 Enter the NPS pipe size and the pipe wall thickness or schedule.

19.0 Enter the required minimum Pre-heat / maximum Interpass temperature. This information is obtained from the Form 167/167C, or the appropriate General Welding Standard.

20.0 The FWE completing the form shall print their name and sign (manually or electronically) and date.

21.0 The QCE shall review the pre-weld information entered by the FWE on the WR-25a for Q listed welds. Reference construction procedure 24590-WTP-GPP-CON-7101 Construction Quality Control Program. The QCE is verifying that the requirements entered comply with the requirements of the Form 167/167C, General Welding Standard and that the assigned procedures and references are correct. Any errors or omissions found shall be brought to the attention of the originator and corrected. When the QCE is satisfied that the pre-weld requirements are correct, the QCE will print their name and sign (manually or electronically) and date in the space provided. For all other quality levels or Non Permanent plant designated welds, QCE reviews, and signs (manually or electronically) attesting that for the welds referenced the correct Quality Level is represented on the form.

Results Section- Initialing and dating shall be performed at the time of verification and indicates the FWE and/or QCE release/acceptance of the attribute.

22.0 The FWE or QCE shall check the following at the fit-up. The acceptance criteria are specified in the applicable General Welding Standard, General Purging Standard, and VT procedure referenced at item 15 and/or other design out-put documents/drawings. Also enter the welder's symbol in item 25 that made the tacks.

22.1 Cleanliness of the area to be welded,

22.2 Cleanliness of immediate adjacent area,

22.3 Weld preparation geometry (if applicable and accessible),

22.4 Tack welds acceptable,

22.5 Proper base materials are being used,

22.6 Correct filler material was used for tacks,

22.7 Preheat meets minimum requirement,

22.8 Purge was acceptable, if required,

22.9 Verify that the welder that deposited tack welds was properly qualified.

22.10 On Socket welds measure the scribe line or actual pullback witnessed,

22.11 When scribe lines are not used, the actual insertion depth and pullback will be visually witnessed, and documented as such on the WR-25a

22.12 When scribe lines are used, verify that the distance between the scribe lines meets the minimum specified in GWS-2.

22.13 If scribe lines are not discernable at the time of final exam then the pull back will be considered unacceptable and the weld reworked.

23.0 The FWE or QCE shall initial (manually or electronically) and date when they verify that the maximum Interpass temperature was not exceeded. This verification may be made using temperature indicating crayons.

24.0 The FWE or QCE shall verify that the weld meets the final visual criteria and is released for any subsequent required NDE. As part of this verification, ensure that the weld number and welder ID has been marked near the weld via approved hard stamping or markers. The acceptance criteria are specified in the VT procedure referenced at Item 15. Welds requiring NDE should be flagged at this time to assist the NDE crew in locating the weld.

24.1 The weld size, location and orientation was acceptable,

24.2 The base materials were the correct type,

24.3 Qualified welders made the weld,

24.4 The correct weld filler material was used,

24.5 Any temporary attachment removal areas were acceptable.

24.6 After welding the final distance between scribe lines was acceptable. On socket welds GWS-2 requires scribe lines to be used to assure the minimum gap of ~ 1/16" and maximum of 1/8" prior to welding was achieved. The distance between scribe lines after welding will be verified. Where scribe lines do not exist at time of final exam contact LFWE for required action,.

24.7 Stamping or permanent marker correctly identified the weld number,

24.8 The weld was visually acceptable per the applicable VT exam procedure,

24.9 The weld was suitable for any subsequent NDE.

25.0 The welder ID of all welders that welded on the joint shall be entered here. If tacks only it should be clearly annotated which welder performed only the tacks.

26.0 The heat code for the filler material used in the weld shall be entered here.

27.0 When the required NDE is completed, the status shall be indicated here. The NDE report number shall be entered in the remarks. Note that any surface NDE-PT or MT should be complete and accepted before welds are released for PMI testing on the weld.

28.0 Enter any special or unique requirements or precautions that may pertain to the weld being made. For example: Hardness testing is required or Notify Caliber inspection to perform inspection of Fit-up. Also, this space may be utilized as required to support the weld. Entries may be made as appropriate by the FWE or QCE. Any notes manually entered shall be initialed and dated by the individual making the entry. Attempt to make entries brief, concise, and legible. If unique verification points are added via this section, suitable areas for initials and dates shall be provided. The individual adding the unique verification point shall sign (manually or electronically) and date the addition. If more space than that provided is required, a separate sheet shall be utilized. When such a sheet is utilized, a reference shall be made to it in the remarks section, and it shall be attached to the WR-25.

29.0 If BNI Measuring and test equipment is used to accept the weld these fields shall be completed.

30.0 For CM and NP records the FWE reviews all information entered, including any additional sheets that were used, and any NDE documents. They verify that all of the stipulated requirements have been completed and are acceptable. Review should encompass the below as a minimum. When review is complete print their name and sign and date in the space provided.

30.1 All drawing and procedure revisions listed are current revision. If later revisions are found, evaluate the affect on the completed inspection / weld. If re-welding is required the weld may be added on to the current WR-25 or a new WR-25 issued indicating the weld as a "R-" or "C-" as appropriate. If re-inspection is required it shall be performed and signed off on the current WR-25. In either case, an explanation should be added in the remarks for the reason of the re-weld or re-inspection record number. If a change to the revisions has no impact on the welding or inspection criteria a "No Impact" statement shall be added. {During this review if a referenced document is found to have a later revision it shall be corrected on the first page of the record, all other pages may continue to reference the revision that was applicable at the time of examination and do not need correction}

30.2 When multiple WPS were listed at block 11, indicate which WPS was used,

30.3 Paginated correctly.

30.4 Bechtel RT interpretation sheets will be made part of the record

30.5 Subcontractor NDE reports, PMI, PT and or MT will be made part of the record.

30.6 Subcontractor RT Techniques sheets will be made part of the record.

30.7 Weld maps will be made part of the record.

30.8 If repaired or cut out, the original weld paper and all associated repair and cutout record sheets associated NDE documents will be made part of the record.

30.9 NDE records attached are completed acceptably,

30.9.1 Indicate acceptance status,

30.9.2 Are legible

30.9.3 Report numbers are shown

30.9.4 Signed by the appropriate certified individual.

30.9.5 Drawing and procedure revisions are the latest or revisions have been reviewed for impact to the completed examination. If re-examination is deemed required, it shall be performed and signed off on the current WR-25.

30.10 Deleted

30.11 All appropriate blocks on the record completed and legible

30.12 All blocks are addressed on the record

30.13 Verify that correct WPS and NDE were utilized for the given weld.

30.14 Verify that the welder was currently qualified for the weld made i.e.: position, weld deposit thickness, pipe diameter, and weld process.

30.15 Any corrections are correctly made per site requirements.

30.16 Any remarks are clear, legible, understandable and initialed and dated.

31.0 For "Q" records the QCE performs all the items listed at Item 30. When review is complete print their name and sign and date in the space provided. NA may be entered in block 31 as FWE closure review of the record will only be randomly performed by the FWE on "Q" records.

32.0 When the FWE does perform that review it will be indicated by printed name and signature and date of the FWE who performed the review before the QCE receives the package.

Appendix C- Page 1 of 5

Instructions for Field Welding Checklist (WR-25c)

RECORD No. 24590- (1) _____ Sheet ____ of ____

General and Verification Requirements: Area (2) _____

Parent ID: (3) _____ CWP No: (4) _____

Weld Map No. (5) _____ Facility (6) _____

Component or (7) _____ Dwg No. / Rev. (8) _____

Hanger No. _____ Dwg No. / Rev. _____

Quality Class (9) _____ WPS / Rev No (10) _____ Filler Material (11) _____

VT Procedure / Rev (12) _____ Other NDE (13) _____

Issued By / Date (16) _____ QCE Review By / Date (17) _____

Print and Sign Print and Sign

Sample, Actual record will be a Landscape version

General and Verification requirements		Recorded Results								
Weld No. or Description	Preheat / Interpass° F	Fit-up		Interpass Temperature		Final Visual		Welder Symbol	Heat Code	NDE Complete Acc or Rej
		FWE / Date	QCE / Date	FWE / Date	QCE / Date	FWE / Date	QCE / Date			
(14)	(15)	(18)		(19)		(20)		(21)	(22)	(23)
Remarks : (24)										
M&TE ID : (25)		M&TE Cal. Date				M&TE Cal Due Date				

Closure Review FWE / Date (26) Closure Review QCE / Date (27)

Print and Sign Print and Sign

1.0 Complete the record number. The number may be obtained through PDC.

2.0 Enter area that welding is being performed in. For pipe supports the area may be found listed in the "Const. Work Area" block on the drawing. For other applications use a general description i.e. HLW el +3'-0". This is required for BOF only.

3.0 Enter the applicable Parent ID.

4.0 Enter the work package number used to control the work activity.

5.0 If applicable, enter the weld map number (e.g. 24590-HLW-DD-S13T-00201-WM-1).

6.0 Enter the appropriate Facility acronym (i.e. HLW, LAW, PTF,etc). For the BOF area add the specific facility name, not the system number (i.e. Chiller / Compressor not 225)

7.0 Enter the hanger or support number, or a general description of the Item being worked, Stud relocation for embed PTFI10063, Beam Seats El+21' Area 3.

8.0 Enter the drawing and revision number

9.0 Enter the applicable Quality class. Quality class is indicated on the design drawings.

10.0 Enter the applicable Welding Procedure Specification (WPS) number and revision. Obtain the assigned WPS from the Form 167/167C. The revision number is obtained from the WPS that is contained in section 3 of the WCM. When the Form 167 allows more than one WPS several may be listed here.

11.0 Enter the ASME or AWS classification of the filler material to be used for the weld. This information is obtained from the WPS. (E.g. E-7018 or ER70S-2 / E-7018).

12.0 Enter the applicable VT examination procedure and revision number. The procedure number is obtained from the Form 167/167C. The procedure revision number is obtained from the VT procedure contained in Section 10 of the WCM.

13.0 If applicable, enter any other NDE examination procedure and revision number that would be required. The procedure number is obtained from the Form 167/167C.

14.0 Enter the applicable Weld Number or description. This information is obtained from the weld map. If it is a weld that is to be completely cut-out and re-welded, add the "C" designator with a sequential number to the end of the current weld number (e.g., FW-12 C1). For a repair to a weld, add the "R" designator with a sequential number to the end of the current weld number (e.g., FW-12 R1). It may also be entered descriptively e.g. end bracket to existing steel. Continuation pages may be used as required. The minimum information in the header section of continuation pages will be the record number and pagination.

15.0 Enter the required minimum Pre-heat / maximum Interpass temperature. This information is obtained from the Form 167/167C, or the appropriate General Welding Standard.

16.0 The FWE completing the form shall print their name and sign (manually or electronically) and date.

17.0 The QCE shall review the pre-weld information entered by the FWE on the WR-25c for Q listed welds. Reference construction procedure 24590-WTP-GPP-CON-7101 Construction Quality Control Program. The QCE is verifying that the requirements entered comply with the requirements of the Form 167/167C, General Welding Standard and that the assigned procedures and references are correct. Any errors or omissions found shall be brought to the attention of the originator and corrected. When the QCE is satisfied that the pre-weld requirements are correct, the QCE will print their name and sign (manually or electronically) and date in the space provided. For all other quality levels or Non Permanent plant designated welds, QCE reviews, and signs (manually or electronically) attesting that for the welds referenced the correct Quality Level is represented on the form.

Results Section - Initialing (manually or electronically) and dating shall be performed at the time of verification and indicates the FWE and/or QCE release/acceptance of the attribute.

18.0 The FWE or QCE shall check the following at the fit-up. The acceptance criteria are specified in the applicable General Welding Standard, General Purging Standard, and VT procedure referenced at item 12 and/or other design out-put documents/drawings. Also enter the welder's symbol in item 21 that made the tacks.

18.1 Cleanliness of the weld prep,

18.2 Cleanliness of immediate adjacent area,

18.3 Weld preparation geometry (if applicable and accessible),

18.4 Root openings with-in code or WPS allowable,

18.5 Tack welds acceptable,

18.6 Proper base materials are being used,

18.7 Correct filler material was used for tacks,

18.8 Preheat meets minimum requirement,

18.9 Joint Mis-match with-in code or WPS allowable,

18.10 Verify that the welder that deposited tack welds was properly qualified.

19.0 The FWE or QCE shall initial (manually or electronically) and date when they verify that the maximum Interpass temperature was not exceeded. This verification may be made using temperature indicating crayons.

20.0 The FWE or QCE shall verify that the weld meets the final visual criteria and is released for any subsequent required NDE. As part of this verification, ensure that the weld number and welder ID has been marked near the weld via approved hard stamping or markers. The acceptance criteria are specified in the VT procedure referenced at Item 12. Welds requiring NDE should be flagged at this time to assist the NDE crew in locating. Also consider the following during final VT as applicable.

20.1 The weld size, location and orientation was acceptable

20.2 The base materials were the correct type

20.3 Qualified welders made the weld

20.4 The correct weld filler material was used

20.5 Any temporary attachment removal areas were acceptable.

20.6 Stamping or permanent marker correctly identified the weld number.

20.7 The weld was visually acceptable per the applicable VT exam procedure.

20.8 The weld was suitable for any subsequent NDE

20.9 The welder ID of all welders that welded on the joint shall be entered here. If tacks only it should be clearly annotated which welder performed only the tacks.

21.0 The welder symbol of the welder(s) that performed the weld shall be entered here.

22.0 The heat code for the filler material used in the weld shall be entered here.

23.0 When the required NDE is completed, the status shall be indicated here. The NDE report number shall be entered in the remarks. Note that any surface NDE-PT or MT should be complete and accepted before welds are released for PMI testing on the weld.

24.0 Enter any special or unique requirements or precautions that may pertain to the weld being made. For example: Hardness testing is required, Notify Caliber inspection to perform inspection of Fit-up. Also, this space may be utilized as required to support the weld. Entries may be made as appropriate by the FWE or QCE. Any notes manually entered shall be initialed and dated by the individual making the entry. Attempt to make entries brief, concise, and legible. If unique verification points are added via this section, suitable areas for initials and dates shall be provided. The individual adding the unique verification point shall sign and date the addition. If more space than that provided is required, a separate sheet shall be utilized. When such a sheet is utilized, a reference shall be made to it in the remarks section, and it shall be attached to the WR-25c.

25.0 If BNI Measuring and test equipment is used to accept the weld these fields shall be completed.

26.0 For CM and NP records the FWE reviews all information entered, including any additional sheets that were used, and any NDE documents. They verify that all of the stipulated requirements have been completed and are acceptable. Review should encompass the below as a minimum. When review is complete print their name and sign and date in the space provided.

26.1 All drawing and procedure revisions listed are current revision. If later revisions are found, evaluate the affect on the completed inspection / weld. If re-welding is required the weld may be added on to the current WR-25 or a new WR-25 issued indicating the weld as a "R-" or "C-" as appropriate. If re-inspection is required it shall be performed and signed off on the current WR-25. In either case, an explanation should be added in the remarks for the reason of the re-weld or re-inspection record number. If a change to the revisions has no impact on the welding or inspection criteria a "No Impact" statement shall be added. {During this review if a referenced document is found to have a later revision it shall be corrected on the first page of the record , all other pages may continue to reference the revision that was applicable at the time of examination and do not need correction}

26.2 When multiple WPS were listed at block 11, indicate which WPS was used,

26.3 Paginated correctly.

26.4 Bechtel RT interpretation sheets will be made part of the record

26.5 Subcontractor NDE reports, PMI, PT and or MT will be made part of the record.

26.6 Subcontractor RT Techniques sheets will be made part of the record.

26.7 Weld maps will be made part of the record.

26.8 If repaired or cut out, the original weld paper and all associated repair and cutout record sheets associated NDE documents will be made part of the record.

26.9 NDE records attached are completed acceptably,

26.9.1 Indicate acceptance status,

26.9.2 Are legible

26.9.3 Report numbers are shown

26.9.4 Signed by the appropriate certified individual.

26.9.5 Drawing and procedure revisions are the latest or revisions have been reviewed for impact to the completed examination. If re-examination is deemed required, it shall be performed and signed off on the current WR-25.

26.10 For welds in pipe classes that required Random NDE the weld record may be closed as long as the requirements described in Appendix "A "are acceptable for the RT allotment.

26.11 All appropriate blocks on the record completed and legible

26.12 All blocks are addressed on the record

26.13 Verify that correct WPS and NDE were utilized for the given weld.

26.14 Verify that the welder was currently qualified for the weld made i.e.: position, weld deposit thickness, pipe diameter, and weld process.

26.15 Any corrections are correctly made per site requirements.

26.16 Any remarks are clear, legible, understandable and initialed and dated.

27.0 For "Q" records the QCE performs all the items listed at Item 24. When review is complete print their name and sign and date in the space provided. NA may be entered in block 26 as FWE closure review of the record will be randomly performed by the FWE on "Q" records.

28.0 When the FWE does perform that review it will be indicated by printed name and signature and date of the FWE who performed the review before the QCE receives the package.

Appendix D- Page 1 of 4

Instructions for Construction Weld Inspection Drawing Record (CWIDR)

Construction Weld Inspection Drawing Record (CWIDR)

Record No. : 24590- CWIR-CON–(1) Page _____ of _____

Parent ID: (2) Work Package : (3)

Facility (4) ☐ LAW ☐ PTF ☐ HLW ☐ WTP ☐ LAB ☐ BOF - Facility _____

Area and Scope of record (5)

Quality Class : (6) ☐ "Q" ☐ "CM" ☐ "Non-PP"

Drawing (7)	Initial Rev. (8)	Rev at Closure (18)

Welding Information

WPS / Rev : (9) Filler material : (10)

Preheat / Interpass (11) VT per : (12)

Other NDE : (13)

Originator/Date : (14) QCE Reviewer/Date : (15)

Print and Sign Print and Sign

Remarks (16)

For Weld acceptance see attached drawing: (17).

M&TE Serial # : (19) Calibration Date : _____ Calibration Due Date : _____

FWE Closure Review : (20)

QCE Closure Review : (21)

CWIDR Stamp to place on Drawing:

(22) Construction Weld Inspection Drawing Record (CWIDR)
Weld Acceptance Sheet

Record No.: _____

Page _____ of _____

FWE/ Date:

1.0 Complete the record number. The number may be obtained through PDC.

2.0 Enter the applicable Parent ID

3.0 Enter the work package number used to control the work activity

4.0 Enter an "X" for the appropriate Facility acronym (i.e. HLW, LAW, PTF,etc). For the BOF area add the specific facility name, not the system number (i.e. Chiller / Compressor not 225)

5.0 Enter the area that welding is being performed in. ie HLW El +3'-0". Also provide a brief scoping statement that the CWIDR is written for. E.g. Platform 27 steel, ladder and handrails located between Column 4.1 to 6 and A to B @ el +21'-7-1.2".

6.0 Enter the applicable Quality class. Quality class is indicated on the design drawings.

7.0 Enter the drawing number.

8.0 Enter the revision number when record generated.

9.0 Enter the applicable Welding Procedure Specification (WPS) number and revision. Obtain the assigned WPS from the Form 167/167C. The revision number is obtained from the WPS that is contained in section 3 of the WCM. When the Form 167 allows more than one WPS several may be listed here.

10.0 Enter the ASME or AWS classification of the filler material to be used for the weld. This information is obtained from the WPS. (E.g. E-7018 or ER70S-2 / E-7018).

11.0 Enter the required minimum Pre-heat / maximum Interpass temperature. This information is obtained from the Form 167/167C, or the appropriate General Welding Standard.

12.0 Enter the applicable VT examination procedure and revision number. The procedure number is obtained from the Form 167/167C. The procedure revision number is obtained from the VT procedure contained Section 10 of the WCM.

13.0 If applicable, enter any other NDE examination procedure and revision number that would be required. The procedure number is obtained from the Form 167/167C.

14.0 The FWE completing the form shall print their name and sign and date.

15.0 The QCE shall review the pre-weld information entered by the FWE on the WR-25c for Q listed welds. Reference construction procedure 24590-WTP-GPP-CON-7101 Construction Quality Control Program. The QCE is verifying that the requirements entered comply with the requirements of the Form 167/167C, General Welding Standard and that the assigned procedures and references are correct. Any errors or omissions found shall be brought to the attention of the originator and corrected. When the QCE is satisfied that the pre-weld requirements are correct, the QCE will print their name and sign and date in the space provided. For all other quality levels or Non Permanent plant designated welds, QCE reviews, and signs attesting that for the welds referenced the correct Quality Level is represented on the form.

16.0 Enter any special or unique requirements or precautions that may pertain to the weld being made. For example: Hardness testing is required, Notify Caliber inspection to perform inspection of Fit-up. Also, this space may be utilized as required to support the weld. Entries may be made as appropriate by the FWE or QCE. Any notes manually entered shall be initialed and dated by the individual making the entry. Attempt to make entries brief, concise, and legible. If unique verification points are added via this section, suitable areas for initials and dates shall be provided.

Results Section - Initialing and dating shall be performed at the time of verification and indicates the FWE and/or QCE release/acceptance of the attribute.

17.0 The FWE or QCE weld acceptance will be denoted on the drawing that is attached to the CWIDR.

17.1 The FWE or QCE shall indicate acceptance by entering their initials and date near the item being accepted and by drawing arrow to the item or by clouding a general area and accepting all the welding with-in the cloud or any other method that would indicate what was being accepted. Highlighters may be used to aid in locating areas inspected.

17.2 The Welder's ID and the heat code for any filler material shall also be indicated.

17.3 The FWE or QCE shall verify that the weld meets the final visual criteria and is released for any subsequent required NDE. As part of this verification, ensure that the welder ID has been marked near the weld via approved hard stamping or markers. The acceptance criteria are specified in the VT procedure referenced at Item 12. Welds requiring NDE should be flagged at this time to assist the NDE crew in locating. The following should be considered as applicable,

17.4 The weld size, location and orientation was acceptable

17.5 The base materials were the correct type

17.6 Qualified welders made the weld

17.7 The correct weld filler material was used

17.8 Any temporary attachment removal areas were acceptable.

17.9 Stamping or permanent marker correctly identified the weld number.

17.10 The weld was visually acceptable per the applicable VT exam procedure.

17.11 The weld was suitable for any subsequent NDE

17.12 When all the welding within the scope identified at block 5 is complete or as required to support subsequent activities the record shall be closed by performing the items shown for block 19.The weld ID of all welders that welded on the joint shall be entered here. If tacks only it should be clearly annotated which welder performed only the tacks.

18.0 Enter the revision number when record was closed.

19.0 If BNI Measuring and test equipment is used to accept the weld these fields shall be completed.

20.0 For CM and NP records the FWE reviews all information entered, including any additional sheets that were used, and any NDE documents. They verify that all of the stipulated requirements have been completed and are acceptable. Review should encompass the below as a minimum. When review is complete print their name and sign and date in the space provided.

20.1 All drawing and procedure revisions listed are current revision. If later revisions are found, evaluate the affect on the completed inspection / weld. If re-welding is required the weld may be added on to the current CWIDR. If re-inspection is required it shall be performed and signed off on the current CWIDR. In either case, an explanation should be added in the remarks for the reason of the re-weld or re-inspection record number. If a change to the revisions has no impact on the welding or inspection criteria a "No Impact" statement shall be added. {During this review if a referenced document is found to have a later revision it shall be corrected on the first page of the record , all other pages may continue to reference the revision that was applicable at the time of examination and do not need correction}

20.2 When multiple WPS were listed at block 7, indicate which WPS was used,

20.3 Paginated correctly,

20.4 Bechtel RT interpretation sheets will be made part of the record,

20.5 Subcontractor NDE reports, PMI, PT and or MT will be made part of the record,

20.6 Subcontractor RT Techniques sheets will be made part of the record,

20.7 NDE records attached are completed acceptably,

20.7.1 Indicate acceptance status,

20.7.2 Are legible,

20.7.3 Report numbers are shown,

20.7.4 Signed by the appropriate certified individual,

20.7.5 Drawing and procedure revisions are the latest or revisions have been reviewed for impact to the completed examination. If re-examination is deemed required, it shall be performed and signed off on the current WR-25,

20.7.6 All appropriate blocks on the record completed and legible,

20.8 All blocks are addressed on the record,

20.9 Verify that correct WPS and NDE were utilized for the given weld,.

20.10 Verify that the welder was currently qualified for the weld made i.e.: position, weld deposit thickness, pipe diameter, and weld process,

20.11 Any corrections are correctly made per site requirements,

20.12 Any remarks are clear, legible, understandable and initialed and dated,

21.0 For "Q" records the QCE performs all the items listed at Item 26. When review is complete print their name and sign and date in the space provided. NA may be entered in block 26 as FWE closure review of the record will be randomly performed by the FWE on "Q" records.

21.1 When the FWE does perform that review it will be indicated by printed name and signature and date of the FWE who performed the review before the QCE receives the package.

22.0 This stamp shall be completed accordingly and placed on any drawings used to document the acceptance of the welding that are part of that CWIDR

Appendix E- Page 1 of 2

Nondestructive Examination Request

Nondestructive Examination Request			
Work Package No. (1)	Item / Component Description: (2)		Date: (3)
Area : (4)		Surface Condition : (5) Ground As- Welded	
Dwg No. or Line Number: (6)	Time Of Exam N. A. (7) Pre PWHT____ Post -PWHT____	Procedure / Revision No. (8)	
Code / Weld Class (9)	Material Type (10) C/S _____ S/S____ Dissimilar Material _____	Process(es) Used (Only req'd for RT) Root Fill / Cap (11)	

P T (12)	MT	RT	UT	PMI	Other
_____	_____	_____	_____	_____	____

Weld No.	Quality Class	Component / Configuration	Diameter / Thickness	Welder ID	Location
(13)	(14)	(15)	(16)	(17)	(18)

Remarks or Sketch
(19)

Requested By / Date (20)

Sample

Actual Form may vary; Information should be presented clearly to indicate the required examination.

1.0 Enter the applicable Construction Work Package number.

2.0 Enter a general description of component / item or system being welded. Information for item 2 is obtained from the applicable work package, FSK or design drawing. For example: HLW Smelter Feed Line A.

3.0 Enter Date NDE is requested.

4.0 Enter area that welding is being performed in. i.e. HLW el. 21'

5.0 Check, "X" or indicate the actual surface condition of the visually accepted weld (s).

6.0 Enter the drawing and revision number or the line number that applies to the welds listed.

7.0 Check, "X "or indicate the applicable time of the exam as it relates to before or after PWHT activities.

8.0 Enter the applicable procedure number and revision number. The procedure number comes from the WR-25 and/or the Form 167/167C. The revision number comes from the applicable procedure contained in Sections 9 or 10 of the WCM.

9.0 Enter the applicable code and class or enter N/A if not applicable. i.e. ASME B31.3 Category D.

10.0 Check, "X "or indicate the appropriate materials involved.

11.0 If RT is requested enter the welding process or processes used to aid in the correct identification of potential defects identified in the completed radiograph. When not applicable enter N/A, N/R or None.

12.0 Check or "X "the appropriate line or lines for the examination being requested. If not listed enter the type being requested under other.

13.0 Enter the weld number for the weld requiring listed NDE.

14.0 Enter the Quality Class indicated on the WR-25 for the applicable weld.

15.0 Describe the general component or configuration to be examined. I.e. Elbow to nozzle, Lug to base plate.

16.0 Only required for RT examination. Enter the diameter, if applicable, and the thickness of the weld to be RT'd. When not applicable enter N/A, N/R or None.

17.0 Only required for RT examination, enter the welder(s) that welded on the weld. When not applicable enter N/A, N/R or None.

18.0 Enter general description of where the weld is physically located to aid the NDE technician in locating the weld(s).

19.0 Use as appropriate to clarify or aid in the required examinations or to indicate when outside or oversight hold points or witnessing is required. i.e. OSR Hold Point to witness PT exam of weld 6.

20.0 Signature (manually or electronically) and date of individual completing the form.

Appendix F- Page 1of 3

Welder Lot History Report

Welder Lot History Report - (1) Record No.: 24590-WTP-WLHR-CON- (2) Page (3) of

VT Date	Weld No.	Drawing No.- (24590-)	Weld Map Number	Weld Record No.	RT'd Acc/ Rej	Tracer No.	RT Report No.	Comment
(4)								

REPAIR STATUS

(5)								

Additional Comments : (6)

Prepared By / Date (7)

Reviewed By / Date (8)

1.0 Complete the Welder Lot History Report Identification as shown in Appendix F based on the Welder ID, a sequential number, and VT, RT or UT as appropriate to the allotment. I.e. "P07-001-RT"

2.0 Obtain the record number from FPDC and enter the balance of record number in space provided.

3.0 Complete pagination as appropriate.

4.0 Enter the data in the fields for the welds that are represented in the allotment.

4.1 Enter the date the weld was visually inspected. This is obtained from the applicable FWCL.

4.2 Enter the weld number. This is obtained from the applicable FWCL.

4.3 Enter the applicable drawing number for the weld. This is obtained from the applicable FWCL.

4.4 When weld number is indicated on a construction weld map enter the weld map number if applicable. When the weld number comes from the design drawing this block may be NA'd.

4.5 Enter the weld record ID number that is applicable to the weld shown. This is obtained from the applicable FWCL

4.6 If the weld was radiographed, ultrasonically examined, or had the root pass visually examined enter the results, otherwise enter NA. This information is obtained from the Radiographic Interpretation sheet for the applicable weld, the UT inspection report or a sign-off of accepted visual exam on the root pass on the FWCL.

4.7 If the weld was radiographed or ultrasonically examined as a tracer for a weld rejected with-in the allotment, identify tracer ID here as T-1 thru T-4 as appropriate, otherwise enter NA.

4.8 If the weld was radiographed enter the RT report number that is referenced on the Radiographic Interpretation sheet for the applicable weld, If UT'd enter the UT report number, otherwise enter NA.

4.9 Enter relevant information as applicable, or NA

5.0 If any welds were rejected in the allotment, complete this section by entering the applicable data, otherwise enter NA.

6.0 Use the space as required or enter NA.

7.0 The FWE or NDE Coordinator who prepared the allotment log shall print their name then sign and date indicating that the data is accurate and complete.

8.0 Another FWE reviews for completeness and accuracy then signs and dates indicating that the data is accurate and complete.

9.0 Upon completion of Review the record will be forwarded to FPDC for retention and storage.

(Note: For the two historical allotment methods referenced in Appendix G, reference page 30, a similar document will be prepared that lists the weld, welder, drawing, associated weld record ID's, RT status, Tracer status and any repairs. The format will differ from that shown but will address the same elements.)

Appendix G Page 1 of 4

B31.3 - Allotment Definitions for Random Examination

1.0 At RPP / WTP many of the welds are being installed per ASME B31.3 code requirements. This code requires various levels or frequency of verification / inspection to assure acceptable levels of quality are met. This section will specify the RPP/WTP definition and implementation of "Allotments" that will be utilized to meet or exceed those minimum code requirements for verification and examination.

2.0 Two levels of RT/UT verification specified in the code are currently applicable to RPP/WTP. Additionally the piping specification has specified in-process visual examination be performed.

2.1 "Random exam - 5%"

2.2 100% examination. (Since 100% examination is self-explanatory, it will not be addressed in this section.)

Random 5% In-process VT or RT/UT Examination

3.0 The minimum sample frequency for each pipe class, e.g. S11K, C12U, S11V, is specified from Design Engineering on the Form 167. It is shown on each row by the type of weld and the minimum required level of verification is listed in the column under the NDE type. However, the allotments will be made as shown below.

3.1 A log will be maintained that will show each pipe class, the total population of butt welds, the number of butt welds made, the number of butt welds examined, and the resultant percentage of welds examined in the pipe class.

3.2 At RPP/WTP Teamwork's and hardcopy weld records will be used to document all welding activities pertinent to pressure piping. As welds are completed and accepted the WR-25, WR-25a (see section 5.0) is completed. The WR-25, WR-25a is used to enter the welder ID, acceptance status and date of welding acceptance for the applicable weld.

3.3 Welds in 5% systems may be examined at a 100% frequency at the discretion of the LFWE. In the case of the 5% in-process VT specified for girth butt welds on the shield or outer pipe of dual containment piping, 100% inspection of the root pass will be performed.

4.0 General Rules:

4.1 General rules for an allotment are listed below:

4.1.1 Any weld in any of the pipe classes that have been delineated as 5% Normal Service by design on the Form 167.

4.1.2 The welder who made the weld. When more than one welder makes the weld, it shall be counted as one weld in each welder's lot.

4.1.3 Percentage of examination. (5%)

4.1.4 Date of visual weld inspection and acceptance.

4.1.5 Type of weld ('s). (As shown on the Form 167)

4.1.6 Type of NDE. (VT, RT, PT, MT,UT)

4.1.7 The original weld examined, accepted, or rejected is counted as "one completed examination" in the allotment population. When more than one welder welded on the weld, it will count once in each individual welder's lot.

(Note: Autogenously welded tacks will not be counted as having welded on a weld.)

4.1.8 Welds in other allotments (100%) will not be counted in a 5% allotment or vice versa.

4.2 A completed weld repair on a weld previously rejected by NDE will not be counted as a new or additional weld in any allotment. (Actual NDE coverage will be per applicable procedure.)

4.2.1 If the repair activity was unacceptable tracer weld selection is not required, regardless of which welder made / attempted the repair.

4.3 If a weld is cut-out for construction convenience or rejected NDE, the re-welded cutout weld will be included in the current or next open lot of welds for the welder('s) who make it. If this weld happened to be one that was RT'd and the RT was acceptable the allotment it represented will still be closed or closable.

Note – ALL rejected welds must be repaired as necessary to meet the applicable quality requirements. Repair welds will be 100% examined; cut-out's will be examined as required in the lot they end up in.

4.4 Tracer welds selected due to a weld rejected by NDE in a Random examination lot are counted as part of the over-all population in the sample lot, but will not be counted as "one completed NDE" in the allotments.

4.5 Tracer welds are selected only from an open lot and as described below.

4.5.1 When the randomly selected weld is rejected by RT, tracer welds are required to be selected. Two additional welds from the welder's current open lot are required to be examined as tracers, (weld T-1 and T-2).

4.5.2 If both welds T-1 and T-2 are determined to be acceptable, the balance of welds in the lot will be considered acceptable.

4.5.3 If either one of the weld's T-1 or T-2 is unacceptable, then two more welds from the welder's open lot are required to be examined as additional tracers, (T-3 and T-4).

4.5.4 If both welds T-3 and T-4 are determined to be acceptable, the balance of welds in the lot will be considered acceptable.

4.5.5 If either one of the weld's T-3 or T-4 is unacceptable, all of the remaining welds will either be examined or replaced, see paragraph 4.7.

4.5.6 If both of the welds T-1 and T-2 were unacceptable, then four more welds from the welder's open lot are required to be examined as tracers, (T-3, T-4, T-5, and T-6).

4.5.7 If all four welds T-3, T-4, T-5, and T-6 are determined to be acceptable, the balance of welds in the lot will be considered acceptable.

4.5.8 If any one of the weld's T-3, T-4, T-5 or T-6 is unacceptable, all of the remaining welds will either be examined or replaced, see paragraph 4.7.

4.6 When a weld that was welded by more than one welder is rejected, the tracer welds will be selected as follows:

4.6.1 When it can be determined which individual welder deposited the defect the tracers will be selected from that welder's open lot.

4.6.2 When it can not be determined which welder deposited the defect then tracers will be selected from the open lot for each welder.

4.7 When due to rejected NDE on tracers, it becomes a requirement to examine all of the remaining welds in a welders open lot, the LFWE has the option to do one of the following, or combination there-of :

4.7.1 Examine all of the welds in the open lot

4.7.2 Remove all of the remaining welds in the open lot. The removed welds will be welded by a different welder. These welds will be assigned to that welder's current or next open lot.

5.0 5% Random NDE

5.1 One weld in a maximum of 20 welds by a welder in any 5% normal service pipe class will be examined.

5.2 The lots of 20 are determined sequentially, from the earliest to latest, by the date of accepted visual inspection. If more than 20 welds by a welder were accepted on the same date, they will arbitrarily be divided into more than one lot.

5.3 The weld to be radiographed or have the root pass inspected will be selected randomly by the FWE/QCE with-in the current open lot.

5.4 A "Lot" is considered closed when the randomly selected weld, any welds that required repair have been successfully fixed and has accepted NDE, any tracers if required have been examined and accepted or repaired/cut-out, and the twentieth weld has been made and visually accepted.

5.5 When it is required to close an open lot early, before completion /acceptance of the twentieth weld, in order to support subsequent work activities, e.g. concrete pours, hydro's etc. One of the welds in the lot will be randomly selected for RT. If only one weld was currently in the lot, it will be RT'd. The lot will be closed with however many welds are currently in it, with a notation in the records as to the reason for the early closure of the lot.

5.6 When weld records are being reviewed for closure the welder lot history reports will be reviewed to ensure that the weld is represented in a lot.

5.7 If the random weld has already been RT'd and accepted the weld record may be closed. The Lot identifier should be referenced.

5.8 The weld record for the randomly selected weld may be closed upon accepted RT, without closure of the lot. The Lot identifier should be referenced.

5.9 If the weld is in a lot that has been closed, the record may be closed. The Lot identifier should be referenced.

5.10 If no weld has been selected or there are tracers yet to be selected, due to rejects with-in that lot, the weld record will remain active pending completion of all weld tracer selection and RT.

5.11 If the weld record must be closed the weld may be RT'd and if acceptable, the record may be closed as well as the lot. (see item 5.4 above)

6.0 Lot History reports will be maintained. Marked up welder reports or Information logs will be used. The lots will be titled as follows. P008-01-VT , RT or UT, as appropriate. See Appendix F for sample and instruction for completion. (Note that any RT lots that have been closed prior to the effective date of revision 10 will follow the previous approved instruction for the lot history title)

6.1 "P008" is the welder ID

6.2 "01" is a sequential lot designator

6.3 VT for welds that are in a Random in-process VT allotment or RT for those welds that are part of a RT allotment.

7.0 Historical 5% Random RT Methodology

7.1 As the project has been performing welding since December of 2001 the current method's for meeting 5% coverage will be discontinued upon the PDC issue date of the WCM revision 4.

7.2 In order to smoothly transition from the previous method to achieve the 5% coverage in the Underground Air piping (system C12U). The welds completed up to the date of issuance of the approved revision 4 of the WCM will be considered as a "Lot" and that "Lot" will close upon that date. A lot report will be assembled to document the welds, welders, etc. that make up that 'Lot. Ongoing welding in this system will be randomly examined as described in section 5 above, from that date and forward.

7.3 Any open lots will follow the rules stated above in section 5 from the effective date of WCM revision 10 and forward.

7.4 In the Pretreatment C2/C3, system S11K, drain piping the allotment's were defined to be the piping installed by each of the three work packages. 5% of the welds in each package and each welders work in each package would be represented. In order to smoothly transition from this methodology those welds completed in each package, up to the date of the issuance of the approved WCM revision 4 of the WCM, will be considered as a "Lot". Those lots will close based upon that date. A lot report will be assembled to document the welders, welds, etc. that made up those lots. Ongoing welding in this system will be randomly examined as described in section 5 above, from that date and forward.

7.5 Any open lots will follow the rules stated above in section 5 from the effective date of WCM revision 10 and forward

Appendix H Page 1 of 1

Control of Field Welding Records

Purpose

This is the administrative process addressing the daily control of the WR-25s issued to the field. The purpose of this process is to assure welding records have the latest/most current drawings identified.

1. The Daily Weld Record Request and Issue Log form is intended for the daily control issuance and return of field welding records to the field. This form is a sample only, the actual form used may have some formatting variations.
2. After WR-25 weld records are generated, the applicable data is entered into the appropriate Teamworks Tables.
3. The craft/supervision returns the provided copy of the Request form to request documentation for planned welds.
4. All individual documents in requested weld packages are reviewed daily for the correct revision numbers and verified that any applicable design change documents are referenced on the WR-25. All drawing revisions and change documents shall be reviewed for applicability by the FWE. Any applicable changes shall be referenced on the WR-25.
5. The Construction Tech enters into the Daily Issue Log all of the WR-25 weld packages that are to be issued to craft supervision.
6. The Construction Tech indicates in TeamWorks the completion of the weld if applicable.
7. At the end of each shift incomplete weld packages that are checked out shall be returned to the Construction Tech. The Construction Tech verifies that all documents have been returned and/or accounted for and place them in the storage location.

Note:

A PDC Specialist or FWE shall be allowed to perform the duties of the Tech with regards to the issuance and control of the WR-25 weld packages.

Sample

Daily WR-25 Issue Log

Issue Date:								
FWCL No. (Yr-Seq. No.)		ISO/Drawing Number	Work Package	Requested By/Issued To (Should Match Request)	Initial and Date		Remarks	Requestor's Initials
					Returned	To Closure		

Sample WR-25 Request Form

Requested Issue Date: ____________

Work Package	Iso/Drawing Number	Field Weld/Hanger Number or Other Identifier	OFFICE USE ONLY FWCL Number

Comments:

PLEASE PRINT CLEARLY AND LEGIBLY

EACH ISSUED WELD RECORD MUST BE RETURNED TO THE AREA CONTROL STATION AT THE END OF THE SHIFT EACH DAY, REGARDLESS OF COMPLETE STATUS. FAILURE TO DO SO MAY RESULT IN DENIAL OF FURTHER RECORD ISSUANCES UNTIL RETURNED.

Print Name	Signature	Date:

TABLE 1
Notes 1, 2, 3 and 20

	"Q" Piping & Vessels"		"Q" Note 23 Closure Welds -Piping In-Process Exam - Piping		"Q" AWS Structural		'Q" AWS D1.1 Discipline Commodities Note 19	
	FWE	QCE	FWE	QCE	FWE	QCE	Discipline FE	Discipline QCE
Fit-up Full Pen. Welds, Note 8, 9, 10	S	S	S	I Note 21	S	S Note 15	S	S
Fit-up Base Metal Repairs (BMR's) Note 8	S	I	S	I	S	I	S	I
Fit-up Socket welds, Note 8	S	S	NA	NA	NA	NA	NA	NA
Fit-up All other welds, Note 8, 11	S	S	NA	NA	S	S	S	S
Root Pass	S	S Note 16	S	I Note 16	NA	NA	NA	NA
Interpass Temperature, Note 12	S	S	S	I	S	S	S	S
Interpass Cleaning,	S	S	S	I Note 17	NA	NA	NA	NA
Welding variables Note 22	S	S	S	I	NA	NA	NA	NA
Back Grind/ Back Gouge, Note 13	S	I	NA	NA	S	I	S	I
Heat Input Note 18	S	S	S	I	S	S	S	S
Final Visual	S	I Note 14	S	I	S	I	S	I
NDE Reports (PT, MT)	NA	R	NA	R	NA	R	NA	QCE - R (If NDE performed)
PMI Reports	NA	R	NA	R	NA	R	NA	R
Automated /Manual UT reports	S	R&A	S	R&A	S	R&A	S	R&A
Film Interpretation	S	R&A	S	R&A	S	R&A	S	WQCE - R&A (If NDE performed)
Documentation Requirements	WR-25 or WR-25a		WR-25 or WR-25a		WR-25c or CWIDR		WR-25C or Discipline Installation Record	

TABLE 1, contd.
Notes 1, 2, 3 and 20

	"Non-Q" Piping & Vessels"		"Non-Q" Note 23 Closure Welds -Piping In-Process Exam -Piping		"Non-Q" AWS Structural		"Non-Q" AWS D1.1 Discipline Commodities	
	FWE	QCE	FWE	QCE	FWE	QCE	Discipline FE	Discipline QCE
Fit-up Full Pen. Welds, Note 8, 9, 10,	S	NA	I Note 21	NA	S	NA	S	
Fit-up Base Metal Repairs (BMR's) Note 8	I	NA	I	NA	I	NA	I	NA
Fit-up Socket welds, Note 8	S	NA	NA	NA	S	NA	NA	NA
Fit-up All other welds, Note 8, 11	S	NA	NA	NA	S	NA	S	NA
Root Pass	S Note 16	NA	I Note 16	NA	NA	NA	NA	NA
Interpass Temperature, Note 12	S	NA	I	NA	S	NA	S	NA
Interpass Cleaning,	S	NA	I Note 17	NA	NA	NA	NA	NA
Welding variables Note 22	S	S	I	NA	NA	NA	NA	NA
Back Grind/ Back Gouge, Note 13	S	NA	NA	NA	S	NA	S	NA
Heat Input Note 18	S	NA	S	NA	S	NA	S	NA
Final Visual	I	NA	I	NA	I	NA	I	NA
NDE Reports (PT, MT)	NA	R	NA	R	NA	R	NA	QCE - R (If NDE performed)
PMI Reports	NA	R	NA	R	NA	R	NA	R
Automated /Manual UT reports	R&A	S	NA	S	NA	NA	R & A	S
Film Interpretation	R&A	S	R&A	S	R&A	S	FWE - R (If NDE performed)	S
Documentation Requirements	WR-25 or WR-25a		WR-25 or WR-25a		WR-25c or CWIDR		WR-25C or Discipline Installation Record	

NOTES

1 Abbreviations used

1.1 S = Surveillance. Items indicated with an "S" will be monitored on a random surveillance basis by the FWE on all items and QCE where noted on "Q" items. When the attribute is verified, witnessed or reviewed it shall be initial and dated in the appropriate location on the weld inspection record.

1.2 R = 100 % Review by the FWE as noted and QCE where noted on " Q" items

1.3 I = 100 % Inspection (unless otherwise specified) by the FWE as noted and QCE where noted on " Q" items.

1.4 R &A - 100% Review and acceptance shall be performed by SNT- TC-1A Level II or II as indicated in the applicable NDE procedure.

2 QCE involvement is required as applicable for items identified in construction procedure 24590-WTP-GPP-CON-7101, *Construction Quality Control Program*

3 When permanent plant "CM" grade commodities are welded to "Q" commodities the weld will be treated, as "CM" and QCE involvement is not required for AWS/Structural welds only. When piping/pressure boundry "CM" are welded to "Q" the weld will be treated as "Q".

4 See specific examples below where use of a FWCL or CWIDR is **NOT REQUIRED**.

4.1 Construction aid attachments (tack welds) to the embedded side of embedded steel do not require any documented inspections or a FWCL.

4.2 When ledger channels, angles, edge plates, mud sills (or any other configurations acceptable by the LFWE) are being installed on exposed surfaces of embed or other exposed steel to support Q-decking, and design has indicated on the associated drawings these are CONSTRUCTION aids no FWCL is required.

4.3 The FWE should ensure that the correct WPS is referenced on the WR-6 utilized for the attachments in Para 4.1 or 4.2 above based upon the actual material types involved. The FWE will monitor these type activities periodically to ensure that embeds are not getting damaged. Any discrepant conditions will be identified as per existing site procedures. Undercut shall not exceed the acceptance criteria based upon the thickness of steel and any cracks are rejectable. This monitoring will be documented on a Nondestructive Examination Report - Visual Examination report, see VT-AWS D1.1.

4.4 NP piping for the Argon, propane and oxygen temporary systems do not require a FWCL. On these temporary piping systems the weld shall be inspected. When accepted the FWE will initial and date the hardware with permanent marker. As per the site guideline, 24590-WTP-GPP-CON-3102 the FWE will also initial and date the sketch provided by the discipline Field Engineer and indicate which welders performed the work.

5 Rigging devices that are issued in rigging packages will be documented on a WR-25c. They are NP but the completed rigging device will be inspected by a FWE per the sketch provided by the rigging engineer. Any problems with the sketch and hardware will be mutually resolved between the rigging engineer and the FWE.

6 Temporary attachments and Construction aids welded to AWS governed commodities may be made with the use of a WR-6 rod ticket.

6.1 The craftsmen will circle all areas where temporary attachments were removed.

6.2 If a temporary attachment is removed and damage to the base material results, the welding foreman or superintendent will coordinate the inspection of the attachment removal area with the FWE or QCE as appropriate. The FWE/QCE will determine if this area is acceptable or requires a base material repair. Any rework, base metal repairs, required to the steel will be documented accordingly per GWS-Structural on a FWCL.

6.3 Temporary attachments are not allowed to remain installed on exposed steel or pipe unless authorized by Design engineering via the FCR, FCN process.

6.3.1 When design allows the temporary attachment to remain as stated above. The FWE will issue a FWCL to document the inspection and the weld will be visually examined. The welder ID may be left blank on this record, if it is no longer discernable. A suitable note will be made on the FWCL to indicate such. The heat code may also be left blank.

7 Temporary hydro test blanks, caps, flanges, etc. will utilize a FWCL to be installed. An FWCL will be issued as if it were permanent welding.

7.1 As per the piping specification the attachment material shall be he same P-number as that being welded to. Carbon steel may be used on the **OD** of stainless steel when welded with 309 series wire or electrodes.

7.2 The FWE should inspect the welds prior to testing. Qualified welders and the correct WPS will be used

7.3 The removal of the blank, cap, flanges, etc. will be inspected and documented in the remarks section of the FWCL.

7.4 The FWCL will remain open until the blank, cap, flange etc. is removed. The removal will be verified by either the FWE or QCE as applicable

8 Preheat verification for tack welding may be performed by the craftsman. If pre-heat verification prior to commencement of tack welding is desired the FWCL or CWIDR shall be specifically annotated to clearly indicate this unique requirement to the craftsman.

9 AWS D1.1 and D1.6 full penetration structural welding fit-ups will be 100 % inspected by the FWE or QCE. Acceptance will be indicated by initial and dating the fit-up section of the FWCL or on the CWIDR.

10 AWS D1.4 and D9.1 full penetration weld fit-ups will be inspected on a surveillance basis. When inspected, it shall be initialed and dated in the fit-up block of the FWCL or on the CWIDR.

11 For Structural fillet welds, the fit-up opening affects the completed final weld size. The WELDER shall write the amount of root opening on the hardware when the gap exceeds 1/16" up to including 3/16". The FWE and QCE shall account for the noted number in the final visual exam of those welds. When the gap exceeds 3/16" the FWE shall be contacted to determine the required action to be taken prior to welding.

12 Interpass verification will as a minimum be performed by the craftsman at frequency specified by GWS-2 or Structural. The FWE or QCE shall verify on a surveillance basis that the maximum Interpass is not being violated. Acceptance of the verification will be shown by initial and dating the appropriate section of the field welding checklist or on the CWIDR.

13 When Back grind/ back gouge is required, the Field Welding Checklist should be modified to allow the initial and dating to signify the acceptance of that attribute or make appropriate entries in the remarks section of the checklist. The CWIDR should not be used when back gouge inspection is required.

14 QCE shall perform 100% final inspection on all Q Black Cell piping and FWE shall perform %100 final visual inspection on all CM Black Cell piping.

15 Any welds designated by design that will require subsequent NDE volumetric (UT, RT) or surface (PT, MT) will be final VT inspected by QCE. Additionally the QCE will verify that all full penetration groove welds in this category receive fit-up inspection.

16 Accessible portions of ID of the root pass on welds for jacket piping require 100% VT examination.

17 Interpass cleaning and inspection shall be performed every pass

18 Heat input shall (adherence to WPS amperage/voltage and travel speeds) be verified once per weld, orbital weld heat input variables may be verified by review of the weld schedule print-out at the machine.

19 Monitor and document on VT- AWS D1.1.

20 QC to review radiographic and AUT records to verify certification of the interpreter and acceptability of the weld per the applicable procedure. QC surveillance to commence at 100% with reduction to subsequent steps of 75%, 50%, 25%, 10%, and 5% (minimum) upon completion of 2 weeks with no rejectable indications at the previous step.

If any reviewed weld is determined rejectable, surveillance will immediately start over at 100%, and 100% of the welds accepted by the subject Level II/III in the previous 2 weeks will be reviewed to confirm isolation of

the deficiency. Concurrence with weld acceptability will be indicated by signing and dating the Reader Sheet for each weld checked. Disagreement with the FWE Level II interpreter will be referred to the Level III for resolution on an Inspection Exception Report per 24590-WTP-GPP-CON-7101.

21 Fitup inspection will include inspection of joint preparation, cleanliness, joint clearance, internal alignment and preheat verification.

22 Welding variables to be verified shall include (but not limited to) the following: filler material, position, and welding electrode.

23 On 5% of the welds that use In-Process examination, 100% of the attributes of ASME B31.3 paragraph 341.4.1 and paragraph 344.7 shall be performed on this 5% allotment.

TABLE 2 - QA RECORD SUMMARY

	Description	Applicable Procedure Form Located In	QA Record	Non QA Record
1.	Welder Performance Test Record WR-1 (ASME)	WQ-1,WQ-2, WQ-3, WQ-7, WQ-8	Yes	
2.	Welder Performance Qualification Log (WR-2)	WQ-1, 2, 3, & 7		Yes
3.	Welders Qualification Maintenance Log (WR-3)	WQ-1, 2, 8	Yes	
4.	Radiographic Film- Welder Test Acceptance	WQ-1, 2, & 7		Yes
5.	Weld Filler Material Issue Log (WR-22)	WFMC-2		Yes
6.	Weld Filler Material Heat Code Matrix	WFMC-2	Yes	
7.	Filler Material Withdrawal Authorization (WR-6)	WFMC-2		Yes
8.	Non-Destructive Examination Request	WD-3		Yes
9.	Field Welding Checklist (WR-25)	WD-3	Yes	
10.	Bonder Performance Qualification Test Record (WR-49)	NMQ-1	Yes	
11.	Bonder Performance Qualification Log	NMQ-1		Yes
12.	Positive Material Identification - Alloy Steel Verification	PMI-Alloy Steels	Yes (4)	
13.	Vision Test record	NEPQ	Yes (1)	
14.	Education and NDE Training Resume	NEPQ	Yes (1)	
15.	NDE Experience Resume	NEPQ	Yes (1)	
16.	NDE Level II / III Certification Statement	NEPQ	Yes (1)	
17.	NDE Report- Radiographic Film Interpretation	RT-ASME/ AWS D1.1 & D1.6 Non-Tubular	Yes (4)	
18.	Radiographic Film	RT-ASME/ AWS D1.1 & D1.6 Non-Tubular		Yes
19.	NDE Report – Ultrasonic Thickness Measurement	UT-TM	Yes (4)	
20.	NDE Report- Ultrasonic Testing of Welds (AWS D1.1)	UT-AWS D1.1 (Non-Tubular) Figure 2	Yes (4)	
21.	NDE Report – UT calibration Record (AWS D1.1)	UT-AWS D1.1 (Non-Tubular) Figure 4	Yes (2)	
22.	NDE Report – Magnetic Particle examination	MT-AWS D1.1, MT-ASME	Yes (4)	
23.	NDE Report – Liquid Penetrant Examination	PT (SR)-ASME, AWS D1.1 & D1.6	Yes (4)	
24.	NDE Report- VT-ASME	VT-ASME	Yes (3)	

TABLE 2 - SHEET 1 OF 2

TABLE 2 - QA RECORD SUMMARY

	Description	Applicable Procedure Form Located In	QA Record	Non QA Record
25.	NDE Report – VT-AWS Rebar Examination	VT-AWS D1.4	Yes (3)	
26.	NDE Report- VT-AWS	VT-AWS D1.1	Yes (3)	
27.	NDE Report - VT AWS D9.1 Examination	VT-AWS D9.1	Yes (3)	
28.	NDE Report –Leak Testing Vac. Box Bubble Test	LT-(VB)-Tank	Yes	
29.	AWS D1.1 Stud Welding Daily Pre-Operational Test Form	GWS-SW	Yes (4)	
30.	Electrode Holding Oven Temperature Log	WFMC-2	Yes	
31.	Thermit Weld Inspection Record	GWS-Thermit	Yes	
32.	Brazer Performance Test Record WR-48	BQ-1	Yes	
33.	AWS D1.6 Stud Welding Daily Pre-Operational Test Form	WQ-8	Yes (4)	
34.	CWIDR	WD-3	Yes	
35.	Daily use Log Densitometer	RT-ASME	Yes	
36.	Welder Lot History Report	WD-3	Yes	
37.	Ultrasonic Calibration Data Sheet	AIT-UT-001	Yes	
38.	Ultrasonic Examination Data Sheet	AIT-UT-001	Yes	

TABLE 2 - SHEET 2 OF 2

NOTES:

1. The original personnel certification record, evidence of successful completion examinations, and the visual acuity examination records shall be maintained by Welding and NDE Services / CE & T. A copy of those records shall be filed on the project and will be retained by FPDC.
2. The Calibration record will be submitted as a supplement to the NDE Report- Ultrasonic Examination of Welds (AWS D1.1)
3. The completed FWCL or CWIDR may be utilized instead of these forms to signify the visual acceptance of the welds. When no FWCL or CWIDR has been issued and the welded commodity requires visual examination these forms shall be utilized for that examination
4. These forms will be attachments to a CWIDR, FWCL or a Field Inspection report and will be transmitted to PADC as part of that inspection record, versus stand alone documents.
5. Deleted

ATTACHMENT A

WELD ACRONYMS

Weld Types

GB	Groove: Girth Butt
GBr	Groove: Branch
GL	Groove: Longitudinal
GA	Groove: Attachment
GO	Groove: Other
FS	Fillet: Socket
FSOF	Fillet: Slip on Flange
FA	Fillet: Attachment
FO	Fillet: Other

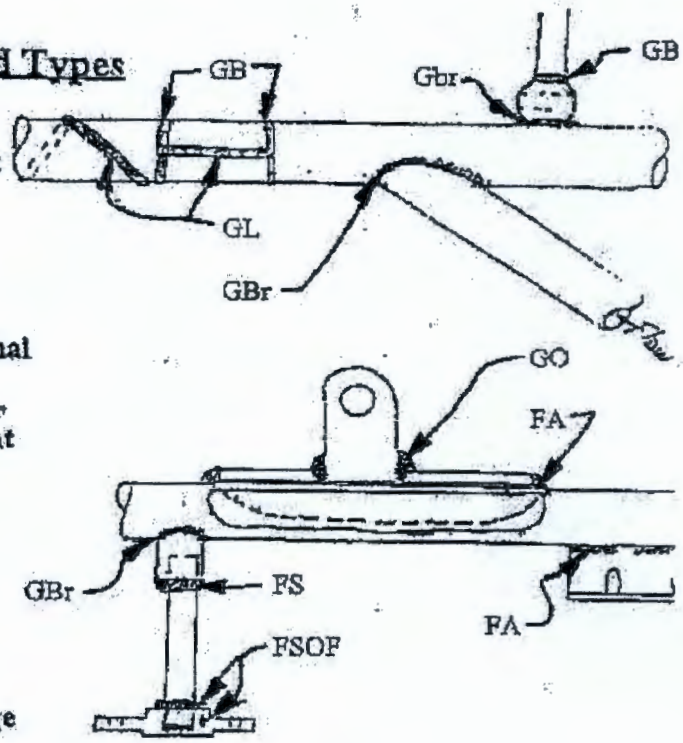

BEST AVAILABLE COPY

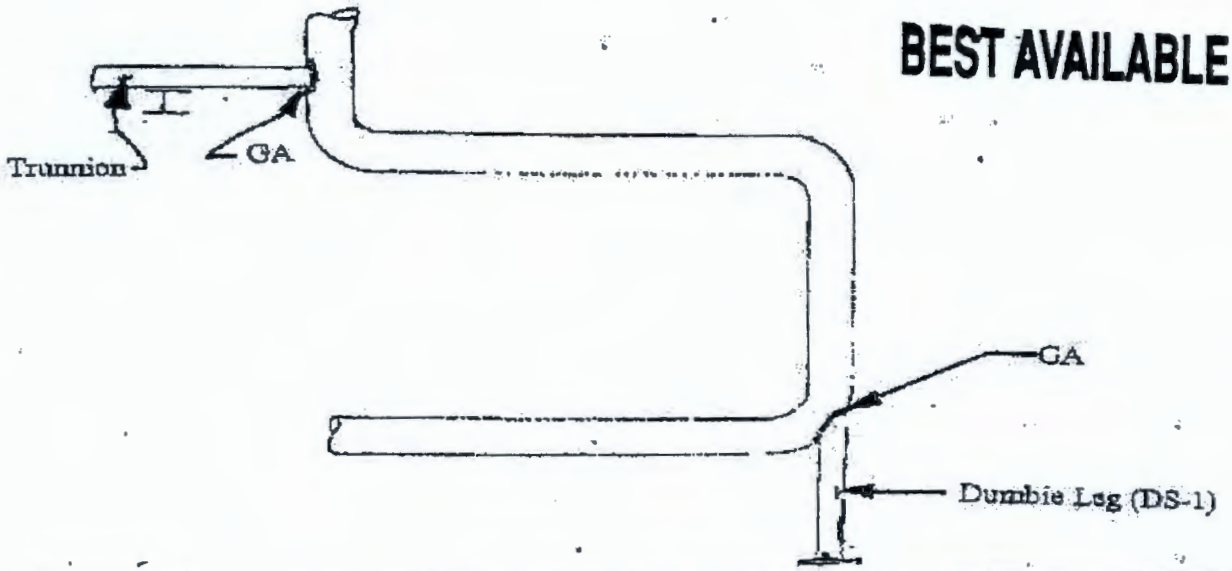

Specification Change Notice

R10680177

CHANGE DOCUMENT NO.
24590-WTP-3PN-PS02-00065

JOB NO.	TITLE FOR CHANGE NOTICE	ISSUED BY
24590	Coaxial Pipe Jacket - Girth Weld Nondestructive Examination Requirements	RPP-WTP PDC

DESIGN DOCUMENT NUMBER	REV NO	TITLE OF DESIGN DOCUMENT
24590-WTP-3PS-PS02-T0003	5	Field Fabrication and Installation of Piping

JUSTIFICATION FOR CHANGE	TREND CODE-NUMBER
ASME B31.3, 341.4.1(b)(1) permits in-process (visual) examination to be substituted for random radiography on weld-for-weld basis when specified by Engineering. This change adds approval requirements for this substitution on an individual weld basis.	N/A

Supersedes Change Document ☒ No ☐ Yes

REQUIREMENTS REVIEW

Client Approval Required	☐ Yes	☒ No	Safety Screening / Evaluation Required Documents identified in 24590-WTP-GPP-SREG-002 must be checked "Yes" regardless of the change being made, and E&NS signature is required below.	☒ Yes ☐ No
Interface Resolution Required	☐ Yes	☒ No		
Design Reverification Required	☐ Yes	☒ No		
Permit Review by E&NS Required	☒ Yes	☐ No	Address any "yes" answers in the description	

DESCRIPTION OF CHANGE

Revise Appendix A, Note 3 to read as follows:

When approved by Engineering, individual coaxial pipe jacket girth welds requiring 5% random RT or UT may be examined by in-process examination in accordance with ASME B31.3, para. 341.4.1 and 344.7 with VT of the root pass per 344.7.1(e).

There are no SRD implementing codes or standards deviations as the result of the changes

ORIGINATOR	CHECKER	REVIEWER (when applicable)
H. Krafft	Dave Lyttle	Kirby Oldfather

QA (when applicable)	E&NS (when applicable)	APPROVER	APPROVAL DATE
Sven Akerman FOR	D. J. LORD	John Minichiello	5/8/06

R10681578

Specification Change Notice

CHANGE DOCUMENT NO.
24590-WTP-3PN-PS02-00066

JOB NO.	TITLE FOR CHANGE NOTICE
24590	Coaxial Pipe Jacket - Girth Weld Nondestructive Examination Requirements

DESIGN DOCUMENT NUMBER	REV NO	TITLE OF DESIGN DOCUMENT
24590-WTP-3PS-PS02-T0001	6	Shop Fabrication of Piping

ISSUED BY
RPP-WTP PDC

PART OF DESIGN CHANGE PACKAGE (DCP)? ☒ No ☐ Yes DCP No.: N/A Rev:

JUSTIFICATION FOR CHANGE

ASME B31.3, 341.4.1(b)(1) permits in-process (visual) examination to be substituted for random radiography on weld-for-weld basis when specified by Engineering. This change adds approval requirements for this substitution on an individual weld basis.

TREND CODE-NUMBER
N/A

Supersedes Change Document ☒ No ☐ Yes

REQUIREMENTS REVIEW

Client Approval Required	☐ Yes	☒ No	Safety Screening / Evaluation Required Documents identified in 24590-WTP-GPP-SREG-002 must be checked "Yes" regardless of the change being made, and E&NS signature is required below. ☒ Yes ☐ No
Interface Resolution Required	☐ Yes	☒ No	
Design Reverification Required	☐ Yes	☒ No	
Permit Review by E&NS Required	☒ Yes	☐ No	Address any "yes" answers in the description

DESCRIPTION OF CHANGE

Revise Appendix A, Note 3 to read as follows:

When approved by Engineering, individual coaxial pipe jacket girth welds requiring 5% random RT or UT may be examined by in-process examination in accordance with ASME B31.3, para. 341.4.1 and 344.7 with VT of the root pass per 344.7.1(e).

There are no SRD implementing codes or standards deviations as the result of the changes

ORIGINATOR	CHECKER	REVIEWER (when applicable)
Dave Lyttle	Jerry Sutton	Kirby Oldfather

QA (when applicable)	E&NS (when applicable)	APPROVER	APPROVAL DATE
Sven Akerman FOR		John Minichiello	5/18/06

Appendix A
Table of Non-Destructive Examination (NDE) of Fabricated Pipe Welds

ASME B31.3, 1996 Edition, *Process Piping*								
Fluid Service Category →	Category D	Normal						
							Dual Containment	
Type of Weld ↓		Less than Class 1500	Class 1500 and Greater	Tubing Inside Black Cell (Pipe Class S11H)	Piping Inside Black Cells [4] (Process) [11]	Piping Inside Black Cells [4] (Non-Process) [11]	Inner Piping	Jacket Piping
Girth and Miter Welds	100% VT	100% VT 5% RT [5] or UT [8]	100% VT 100% RT [5] or UT [8]	100% VT 100% RT [1] or UT [8]	100% VT 100% RT [1] or UT [8]	100% VT **100%** RT [5] or UT [8]	100% VT 100% RT [1] or UT [8]	100% VT 5% RT [3] or UT [3, 8]
Pipe Jacket Longitudinal Welds	N/A	N/A	N/A	N/A	N/A	N/A	N/A	100% VT 5%RT [3] or UT [3, 8]
Fillet Welds Including Socket Welds [6], Integral Support Welds [7], and Liner Plate-to-Piping Weld [7, 10]	100% VT	100% VT	100% VT	N/A	100% VT 100% PT/MT [2, 6]	100% VT 100% PT [2, 6]	100% VT 100% PT/MT [2]	100% VT
Branch Connection Welds (e.g., Weldolets)	100% VT	100% VT	100% VT	N/A	100% VT 100% PT [2] 100% RT [1]	100% VT 100% PT [2] 100% RT [1]	100% VT 100% PT/MT [2]	100% VT

Legend:

RT = Radiographic Examination PT/MT = Liquid Penetrant or Magnetic Particle Examination VT = Visual Examination UT = Ultrasonic Examination

N/A = Not Applicable

See following pages for the Notes

R10682498

Specification Change Notice

ISSUED BY
RPP-WTP PDC

CHANGE DOCUMENT NO.
24590-WTP-3PN-PS02-00067

JOB NO.	TITLE FOR CHANGE NOTICE
24590	Revise Appendix A, NDE requirements, to specify 100% RT or UT of Girth and Miter Welds for ALL Non-Process Piping Inside the Black Cells

DESIGN DOCUMENT NUMBER	REV NO	TITLE OF DESIGN DOCUMENT
24590-WTP-3PS-PS02-T0003	5	Engineering Specification for Field Fabrication and Installation of Piping

JUSTIFICATION FOR CHANGE	TREND CODE-NUMBER
To be consistent with the Specification for Shop Fabrication, 24590-WTP-3PS-PS02-T0001, which requires 100% RT or UT be performed on Girth and Miter welds for ALL Piping Inside Black Cells.	N/A

Supersedes Change Document ☒ No ☐ Yes

REQUIREMENTS REVIEW

Client Approval Required	☐ Yes	☒ No	Safety Screening / Evaluation Required Documents identified in 24590-WTP-GPP-SREG-002 must be checked "Yes" regardless of the change being made, and E&NS signature is required below.	☒ Yes ☐ No
Interface Resolution Required	☐ Yes	☒ No		
Design Reverification Required	☐ Yes	☒ No		
Permit Review by E&NS Required	☒ Yes	☐ No	Address any "yes" answers in the description	

DESCRIPTION OF CHANGE

Revise Appendix A to read as follows: (Attached)

There are no SRD implementing codes or standards deviations as the result of the changes.

ORIGINATOR	CHECKER	REVIEWER (when applicable)
Dave Lyttle	Jerry Sutton	Kirby Oldfather

QA (when applicable)	E&NS (when applicable)	APPROVER	APPROVAL DATE
Sven Akerman		John Minichiello	5/25/06

R10700742

Specification Change Notice

CHANGE DOCUMENT NO.
24590-WTP-3PN-PS02-00068

JOB NO.	TITLE FOR CHANGE NOTICE	ISSUED BY
24590	a) Revise section 1.4.1.4 b) Delete section 3.1.1.5 c) Revise Appendix 'A' table, Coaxial Pipe Jacket Welds - NDE Requirements d) Add section 2.1.6.6	RPP-WTP PDC

DESIGN DOCUMENT NUMBER	REV NO	TITLE OF DESIGN DOCUMENT
24590-WTP-3PS-PS02-T0001	6	Shop Fabrication of Piping

PART OF DESIGN CHANGE PACKAGE (DCP)? ☒ No ☐ Yes DCP No.: N/A Rev:

JUSTIFICATION FOR CHANGE	TREND CODE-NUMBER
To be consistent with the Specification for Field Fabrication, 24590-WTP-3PS-PS02-T0003, which requires 5% RT of the Pipe Jacket Longitudinal Welds	N/A

Supersedes Change Document ☒ No ☐ Yes

REQUIREMENTS REVIEW

Client Approval Required	☐ Yes	☒ No	Safety Screening / Evaluation Required Documents identified in 24590-WTP-GPP-SREG-002 must be checked "Yes" regardless of the change being made, and E&NS signature is required below.	☒ Yes ☐ No
Interface Resolution Required	☐ Yes	☒ No		
Design Reverification Required	☐ Yes	☒ No		
Permit Review by E&NS Required	☒ Yes	☐ No	Address any "yes" answers in the description	

DESCRIPTION OF CHANGE

Revise Section 1.4.1.4 to read as follows:

1.4.1.4 Pipe Fabrication Institute (PFI) Standards

ES-3 Fabricating Tolerance
ES-5 Cleaning of Fabricated Piping
ES-16 (Deleted)
ES-24 Pipe Bending Methods, Tolerances, Process and Material Requirements
ES-31 Standard for Protection of Ends of Fabricated Piping Assemblies

Delete Section 3.1.1.5

Revise Appendix 'A' note 3 and Appendix 'A' Table as follows:

Note 3, now reads:

When approved by Engineering, individual coaxial pipe jacket girth welds requiring 5% random RT or UT may be examined by in-process examination in accordance with ASME B31.3, para. 341.4.1 and 344.7 with VT of the root pass per 344.7.1(e).

Revise to read as follows:

When approved by Engineering, individual coaxial pipe jacket welds requiring 5% random RT or UT may, on a case by case basis, be examined by in-process examination in accordance with ASME B31.3, Para. 341.4.1 and 344.7 with VT of the root pass per 344.7.1(e).

Add the following section:

Specification Change Notice

CHANGE DOCUMENT NO.
24590-WTP-3PN-PS02-00068

JOB NO.	TITLE FOR CHANGE NOTICE
24590	a) Revise section 1.4.1.4 b) Delete section 3.1.1.5 c) Revise Appendix 'A' table, Coaxial Pipe Jacket Welds - NDE Requirements d) Add section 2.1.6.6

DESCRIPTION OF CHANGE

2.1.6.6 Class 600 SW end ball valves, when identified with the proper Buyer stock code, are acceptable to be used where the valve description, both short (listed on the isometric BOM) and the purchase description (specified in the piping class), specifies Class 150 or 300 SW end ball valves.

There are no SRD implementing codes or standards deviations as the result of the changes

Specification Change Notice

CHANGE DOCUMENT NO.
24590-WTP-3PN-PS02-00068

JOB NO.	TITLE FOR CHANGE NOTICE
24590	a) Revise section 1.4.1.4 b) Delete section 3.1.1.5 c) Revise Appendix 'A' table, Coaxial Pipe Jacket Welds - NDE Requirements d) Add section 2.1.6.6

DESCRIPTION OF CHANGE

ORIGINATOR	CHECKER	REVIEWER (when applicable)
Dave Lyttle	Jerry Sutton	Kirby Oldfather

QA (when applicable)	E&NS (when applicable)	APPROVER	APPROVAL DATE
Sven Akerman FOR		John Minichiello	7/26/06

Appendix A
Table of Non-Destructive Examination (NDE) of Fabricated Pipe Welds

ASME B31.3, 1996 Edition, *Process Piping*							
Fluid Service Category →	**Category D**	**Normal**					
						Dual Containment	
Type of Weld ↓		**Less than Class 1500**	**Class 1500 and Greater**	**Tubing Inside Black Cell (Pipe Class S11H)**	**Piping Inside Black Cells [4, 8]**	**Inner Piping**	**Jacket Piping**
Girth and Miter Welds	100% VT	100% VT 5% RT [5]	100% VT 100% RT [5]	100% VT 100% RT [1]	100% VT 100% RT [1]	100% VT 100% RT [1]	100% VT 5% RT [3]
Pipe Jacket Longitudinal Welds	N/A	N/A	N/A	N/A	N/A	N/A	100% VT 5% RT[3]
Fillet Welds Including Socket Welds [6], Integral Support Welds [7], and Liner Plate-to-Piping Weld [7]	100% VT	100% VT	100% VT	N/A	100% VT 100% PT/MT [2, 6]	100% VT 100% PT/MT [2]	100% VT
Branch Connection Welds (e.g., Weldolets)	100% VT	100% VT	100% VT	N/A	100% VT 100% PT [2] 100% RT [1]	100% VT 100% PT/MT [2]	100% VT

Legend:

RT = Radiographic Examination PT/MT = Liquid Penetrant or Magnetic Particle Examination VT = Visual Examination UT = Ultrasonic Examination

N/A = Not Applicable

See following pages for the Notes

R10686225

Specification Change Notice

CHANGE DOCUMENT NO.
24590-WTP-3PN-PS02-00069

JOB NO.	TITLE FOR CHANGE NOTICE
24590	Coaxial Pipe Jacket Welds - Nondestructive Examination Requirements

ISSUED BY RPP-WTP PDC

DESIGN DOCUMENT NUMBER	REV NO	TITLE OF DESIGN DOCUMENT
24590-WTP-3PS-PS02-T0003	5	Field Fabrication and Installation of Piping

PART OF DESIGN CHANGE PACKAGE (DCP)? ☒ No ☐ Yes DCP No.: N/A Rev:

JUSTIFICATION FOR CHANGE	TREND CODE-NUMBER
To coincide with the requirements specified on the Appendix A Table	N/A

Supersedes Change Document ☒ No ☐ Yes

REQUIREMENTS REVIEW

Client Approval Required	☐ Yes	☒ No	Safety Screening / Evaluation Required Documents identified in 24590-WTP-GPP-SREG-002 must be checked "Yes" regardless of the change being made, and E&NS signature is required below. ☒ Yes ☐ No
Interface Resolution Required	☐ Yes	☒ No	
Design Reverification Required	☐ Yes	☒ No	
Permit Review by E&NS Required	☒ Yes	☐ No	Address any "yes" answers in the description

DESCRIPTION OF CHANGE

Revise Appendix A, Note 3 as follows:

Now reads:

When approved by Engineering, individual coaxial pipe jacket girth welds requiring 5% random RT or UT may be examined by in-process examination in accordance with ASME B31.3, para. 341.4.1 and 344.7 with VT of the root pass per 344.7.1(e).

Revise to read:

When approved by Engineering, individual coaxial pipe jacket welds requiring 5% random RT or UT may, on a case by case basis, be examined by in-process examination in accordance with ASME B31.3, para. 341.4.1 and 344.7 with VT of the root pass per 344.7.1(e).

There are no SRD implementing codes or standards deviations as the result of the changes

ORIGINATOR	CHECKER	REVIEWER (when applicable)
Dave Lyttle	Jerry Sutton	Kirby Oldfather

QA (when applicable)	E&NS (when applicable)	APPROVER	APPROVAL DATE
Sven Akerman	D. J. LORD	John Minichiello	6/21/06