MAR 01 1993 (11) START

Station #12

0026888

ENGINEERING DATA TRANSMITTAL

1. EDT 160874

2. To: (Receiving Organization) Distribution	3. From: (Originating Organization) L. C. Swanson	4. Related EDT No.: N/A
5. Proj./Prog./Dept./Div.: Environmental Division	6. Cog. Engr.: K. D. Reynolds	7. Purchase Order No.: N/A
8. Originator Remarks: For Approval and Release of Document		9. Equip./Component No.: N/A
		10. System/Bldg./Facility: N/A
11. Receiver Remarks: N/A		12. Major Assm. Dwg. No.: N/A
		13. Permit/Permit Application No.: N/A
		14. Required Response Date: February 23, 1993

MAR 1993 RECEIVED EDMC

15. DATA TRANSMITTED

(A) Item No.	(B) Document/Drawing No.	(C) Sheet No.	(D) Rev. No.	(E) Title or Description of Data Transmitted	(F) Impact Level	(G) Reason for Transmittal	(H) Originator Disposition	(I) Receiver Disposition
1	WHC-SD-EN-DP-058		0	CY 1992 Borehole Completion Data Package, Grout Treatment Facility Wells 299-E25-44 and 299-E25-45	3Q	1	1	

16. KEY

Impact Level (F)	Reason for Transmittal (G)		Disposition (H) & (I)	
1, 2, 3, or 4 (see MRP 5.43)	1. Approval 2. Release 3. Information	4. Review 5. Post-Review 6. Dist. (Receipt Acknow. Required)	1. Approved 2. Approved w/comment 3. Disapproved w/comment	4. Reviewed no/comment 5. Reviewed w/comment 6. Receipt acknowledged

17. SIGNATURE/DISTRIBUTION (See Impact Level for required signatures)

(G) Reason	(H) Disp.	(J) Name	(K) Signature	(L) Date	(M) MSIN	(J) Name	(K) Signature	(L) Date	(M) MSIN	(G) Reason	(H) Disp.
1	1	Cog. Eng. K.D. Reynolds		2/23/93	H6-06	EDMC (2)			H6-08 ~~H6-22~~	3	
1	1	Cog. Mgr. R.L. Jackson		2/23/93	H6-06	Central Files (2)			L8-04	3	
1	1	QA W.R. Thackaberry		2/23/93	~~H6-06~~ H4-16	ERC			H6-07		
		Safety									
1	1	Env. L.C. Swanson		2/23/93	H6-06						
1	1	B.A. Williams			H6-06						

18.	19.	20.	21. DOE APPROVAL (if required)
L.C. Swanson 2/23/93 L.C. Swanson H6-06 Signature of EDT Originator / Date	K.R. Pechr H6-06 2/23/93 Authorized Representative Date for Receiving Organization	R.L. Jackson H6-06 Cognizant/Project Engineer's Manager / Date	Ltr. No. [] Approved [] Approved w/comments [] Disapproved w/comment

BD-7400-172-2 (07/91) GEF097

BD-7400-172-1 (07/91)

9313090.0463

THIS PAGE INTENTIONALLY
LEFT BLANK

SUPPORTING DOCUMENT

1. Total Pages 103

2. Title

CY 1992 Borehole Completion Data Package, Grout Treatment Facility Wells 299-E25-44 and 299-E25-45

3. Number

WHC-SD-EN-DP-058

4. Rev No.

0

5. Key Words

Borehole, RCRA, monitoring wells, Grout Facility, ODEX

APPROVED FOR PUBLIC RELEASE
3/1/93 N. Solis

6. Author

Name: L.C. Swanson

L.C. Swanson
Signature

Organization/Charge Code 81235/R4GD1

7. Abstract

Wells 299-E25-44 and 299-E25-45 were installed in CY 1992 as RCRA compliant groundwater monitoring wells around the Grout Treatment Facility at the Hanford Site. This data package summarizes the drilling installation activities including records on drilling, well construction, development, sampling, and aquifer testing. An interpretation of the aquifer test data is included.

8. PURPOSE AND USE OF DOCUMENT - This document was prepared for use within the U.S. Department of Energy and its contractors. It is to be used only to perform, direct, or integrate work under U.S. Department of Energy contracts. This document is not approved for public release until reviewed.

PATENT STATUS - This document copy, since it is transmitted in advance of patent clearance, is made available in confidence solely for use in performance of work under contracts with the U.S. Department of Energy. This document is not to be published nor its contents otherwise disseminated or used for purposes other than specified above before patent approval for such release or use has been secured, upon request, from the Patent Counsel, U.S. Department of Energy Field Office, Richland, WA.

DISCLAIMER - This report was prepared as an account of work sponsored by an agency of the United States Government. Neither the United States Government nor any agency thereof, nor any of their employees, nor any of their contractors, subcontractors or their employees, makes any warranty, express or implied, or assumes any legal liability or responsibility for the accuracy, completeness, or any third party's use or the results of such use of any information, apparatus, product, or process disclosed, or represents that its use would not infringe privately owned rights. Reference herein to any specific commercial product, process, or service by trade name, trademark, manufacturer, or otherwise, does not necessarily constitute or imply its endorsement, recommendation, or favoring by the United States Government or any agency thereof or its contractors or subcontractors. The views and opinions of authors expressed herein do not necessarily state or reflect those of the United States Government or any agency thereof.

9. Impact Level 3Q

10. RELEASE STAMP

OFFICIAL RELEASE BY WHC (11)
DATE MAR 01 1993
Station # 12

9313090.0969

THIS PAGE INTENTIONALLY
LEFT BLANK

CONTENTS

1.0 INTRODUCTION 1

2.0 WELL 299-E25-44 3
- 2.1 GENERAL DRILLING INFORMATION 3
- 2.2 SPECIFIC DRILLING COMPLETION 3
- 2.3 WELL COMPLETION 5
- 2.4 WELL DEVELOPMENT AND SAMPLE PUMP INSTALLATION 5
- 2.5 AQUIFER TESTING 6

3.0 WELL 299-E25-45 6
- 3.1 GENERAL DRILLING INFORMATION 6
- 3.2 SPECIFIC DRILLING INFORMATION 8
- 3.3 WELL COMPLETION 8
- 3.4 WELL DEVELOPMENT AND SAMPLE PUMP INSTALLATION 9
- 3.5 AQUIFER TESTING 9

4.0 REFERENCES 12

APPENDICES

A Drilling and Construction Data A-1
B Sediment Sample Data B-1
C Well Development Logs and Pump Installation Data C-1
D Slug Test Data D-1

FIGURES

1 Monitoring Well Locations for the Grout Treatment Facility 2
2 Configuration and Equipment Setup for the ODEX Drilling Method 4
3 Development Drawdown Data for Well 299-E25-44 7
4 Slug Withdrawal Analysis for Well 299-E25-45 10
5 Terminology Used for the Bouwer and Rice Analysis Method 11

TABLE

1 Split Spoon Sample Depths for Well 299-E25-45 8

9313090.0465

THIS PAGE INTENTIONALLY
LEFT BLANK

1.0 INTRODUCTION

Two new downgradient wells were installed at the Grout Treatment Facility (GTF) during 1992 in support of the *Hanford Federal Facility Agreement and Consent Order* (Ecology et al. 1989) Milestone M-24-20. This data package presents information and data on well drilling, well completion, well development, sample pump installation, and aquifer testing for wells 299-E25-44 and 299-E25-45. Figure 1 shows the location of the new wells in relation to the GTF and the existing groundwater monitoring network.

The groundwater monitoring plan for the GTF (WHC 1989), the GTF Dangerous Waste Permit Application (DOE-RL 1992), and the Generic Well Specification for Project W-017H (WHC 1991) provided the requirements and guidelines for the location and justification of the wells. Each well was constructed in conformance with the Washington Administrative Code (WAC) 173-303 *Dangerous Waste Regulations*, WAC 173-304 *Solid Waste Handling*, and WAC 173-160 *Minimum Standards for Construction and Maintenance of Wells*.

The GTF is in a detection monitoring program in accordance with Resource Conservation and Recovery Act of 1976 (RCRA) interim-status requirements for establishing a groundwater monitoring program (EPA 1989). Wells 299-E25-44 and 299-E25-45 are the most recent additions to the GTF monitoring well network. Both wells are downgradient from the facility.

Well locations were approved by the Washington State Department of Ecology (Ecology). Specific procedures for well drilling, completion, development, sampling, and reporting and record-keeping are outlined in the *Environmental Investigations and Site Characterization Manual* (WHC 1988).

The following information is included in the appendices:

<u>Appendix A</u>
- Well Construction Report
- Well Summary Sheet
- Well Survey Data
- Borehole Logs
- Geophysical Logs

<u>Appendix B</u>
- $CaCO_3$ and Moisture Content Data
- Radiation Analysis Data

<u>Appendix C</u>
- Well Development Records
- Pump Installation Form

<u>Appendix D</u>
- Slug Test Data
- Aquifer Test Data Analysis Sheet
- Aquifer Test Data Plots

Additional well installation information not included in this report, but on file with Westinghouse Hanford Company (WHC) are the decontamination reports, chain-of-custody forms, and daily field records.

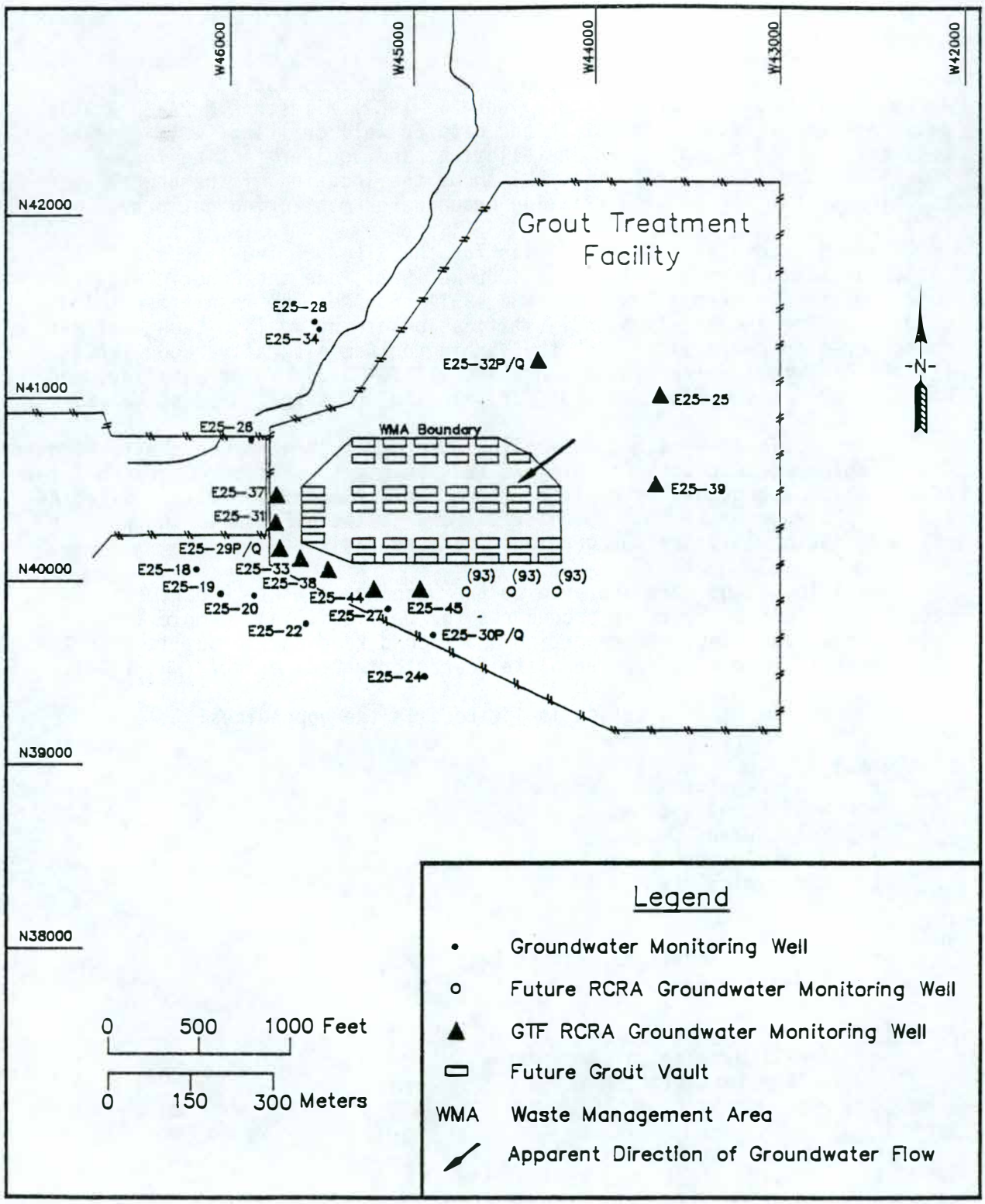

Figure 1. Monitoring Well Locations for the Grout Treatment Facility.

2.0 WELL 299-E25-44

2.1 GENERAL DRILLING INFORMATION

Well 299-E25-44 was drilled using the ODEX (a trademark of Atlas Copco and Sandvik Rock Tools) drilling method. The ODEX method uses a top-drive rotary drilling rig in combination with a down-hole percussion hammer equipped with a special bit and an eccentric swing-out under reamer (Figure 2). Compressed air moves through the downhole percussion hammer, and provides a circulation media to remove cuttings from the drill bit face. The use of air instead of water-based drilling fluid minimizes changes to the in situ hydrologic and chemical properties of the formation.

Air was supplied through a high-pressure (220 psi) air compressor and was passed through a filtration system before introduction into the borehole. The filtration system was capable of removing oil, water droplets, and other possible contaminant particulates down to 0.01 μ in size, and was rated at 99.99% efficiency by the manufacturer. The lubrication in use for the downhole hammer was a U.S. Environmental Protection Agency (EPA) approved nonhydrocarbon based oil.

Cuttings and dust were controlled through a self-contained cutting control system. A vent-and-balance test was conducted as a challenge test to the containment system before startup of drilling. The cuttings were routed at the surface through a diverter head flexible hose into a cyclone separator, then passed through a filter cartridge dust control collection system, and finally purified by a high-efficiency particulate air filter before release to atmosphere (Figure 2).

Samples were collected at a sample port located on the lower side of the cyclone separator in a sampling sock (Figure 2). The ODEX drilling method allows continuous sampling (as desired), and an accurate correlation of the sediments to the depth of removal.

All cuttings and purgewater from the borehole were contained and disposed of in accordance with WHC procedures. Temporary carbon steel casing was used to keep the borehole open while drilling. During drilling non-petroleum based tool and drill string lubricants were used.

2.2 SPECIFIC DRILLING INFORMATION

Drilling began on May 4, 1992, and continued until May 29, 1992, when total depth was reached at 293.3 ft below land surface (bls). The time of actual drilling was 6 to 7 days. The water level measured 269.15 ft bls. Total casing lengths of 292.3 ft of 8-in-dia, 140.44 ft of 10-in. dia, and 13.8 ft of 12-in-dia temporary carbon steel were used to reach total depth. A backhoe was used to set the 12-in. casing. No water was added to the borehole to facilitate drilling.

The Well Summary Sheet in Appendix A provides an as-built diagram that graphically illustrates both the final well configuration, and a brief description of the borehole geology. The Borehole Log (Appendix A) presents a graphical representation of the geology, and includes detailed lithological descriptions and collection intervals for the sediment samples.

9313090.0468

9313090.0469

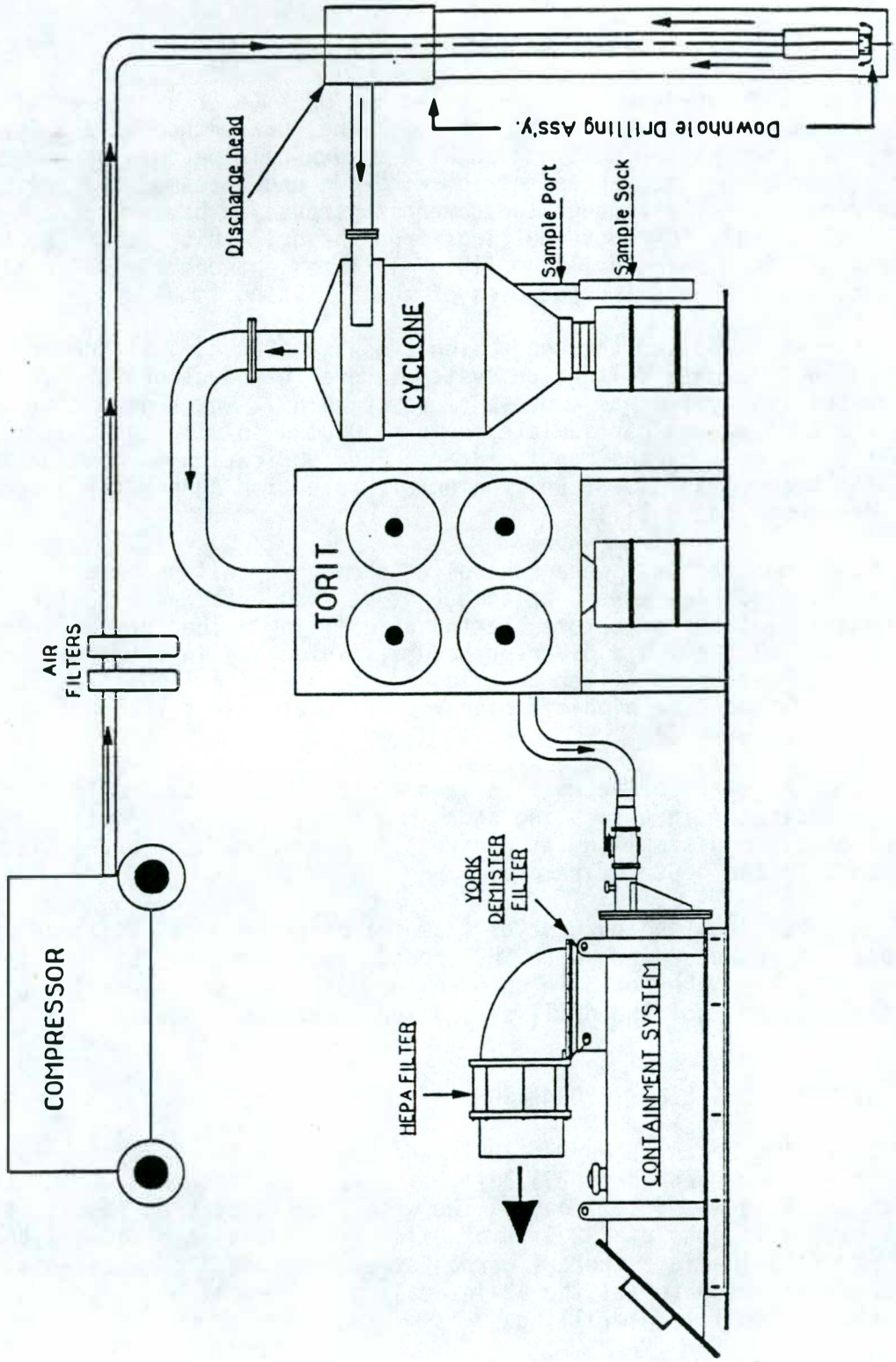

Figure 2. Configuration and Equipment Setup for the ODEX Drilling Method.

Well 299-E25-44 was logged at total depth with a natural-gamma geophysical probe on June 6, 1992. The geophysical log from the survey is presented in Appendix A.

Samples were routinely collected during drilling operations at well 299-E25-44. Generally, samples were taken every 5 ft for lithologic description and for performing laboratory test for moisture content, calcium carbonate ($CaCO_3$) content, and radioactivity. One split spoon sample was collected from 263.3 to 265.3 ft bls for more detailed lithologic and stratigraphic information. No sieve analyses were performed on any of the samples.

Sediment samples are archived at the Hanford Geotechnical Sample Library in the 2101-M Building. Analytical results for the soil samples are presented in Appendix B.

During drilling, sediments samples, and the wellhead were monitored onsite with radiation detection meters and organic vapor analyzers. All meter readings were below any health safety action levels.

9313090.0470

2.3 WELL COMPLETION

Permanent 4-in-dia type 304 stainless steel casing and 10 slot (0.010-in) continuous wire-wrap screen were then installed on June 3, 1992. Factory welded centralizers were placed approximately every 40 ft along the 20-ft joints of permanent casing. Total screen and casing length measured 289.89 ft, including 3.97 ft of stickup at ground surface. The water level at this time was about 269 ft (bls). Prior to well completion, natural formation slough filled the borehole to 287 ft bls.

While backpulling the temporary 8-in. casing with hydraulic jacks, 24 ft of 20-40 mesh silica sand was added to 263 ft bls; an annular seal of bentonite pellets was then placed to 260.5 ft bls; bentonite crumbles were added to 9.9 ft bls; and the borehole sealed to 3.6 ft bls with a Portland cement grout. Later, a concrete surface pad, four protective posts, a 6-in-dia protective casing, and a locking cap were installed. The well was surveyed September 21, 1992 (Appendix A).

2.4 WELL DEVELOPMENT AND SAMPLE PUMP INSTALLATION

Well 299-E25-44 was developed on September 2, 1992, with a submersible electric pump and a transducer. Groundwater was pumped at a flow rate of 11.8 gal/min. About 885 gal of water were removed from the well before a reaching a turbidity value of 3.2 nephelometric turbidity units (NTU). All development water was contained. The results of the well development tests are summarized in Appendix C.

The submersible pump was then removed from the well and a permanent Hydrostar (a trademark of Instrumentation Northwest, Inc.) sampling pump installed on September 2, 1992. The sampling pump intake was set at 286 ft below the top of the casing, which is about 14 ft below the phreatic surface. The development and pump installation data are presented in Appendix C.

2.5 AQUIFER TESTING

Slug tests were not performed at 299-E25-44 because of equipment problems. Water-level changes were monitored during well development using a transducer and data logger system. During the development, groundwater was discharged at a constant rate from the well at 11.8 gpm. After 74 min the development criteria of ≤5 NTU was achieved and pumping terminated. Water-level recovery was monitored for 10 min. Appendix C contains test data and information sheets for the well development results.

Test Analysis

The development drawdown data were not analyzed because of the effects of delayed gravity drainage. An examination of the development data (Figure 3) indicates that delayed yield probably dominated from about 1 min to the end of the test (a very flat and relatively straight line slope). Borehole storage effects dominated the very early-time drawdown data shown by the near-unit slope of the data. If the transmissivity is calculated using the later-time data, the resulting value will be considerably higher than the true value.

The recovery data were not analyzed because of the same negative influences, and the interference effect from riser tubing water draining back into the aquifer during the recovery period; as previously mentioned, a slug test was not performed at this well.

Even though test results are not available for this well, the hydraulic conductivity is expected to be lower than the hydraulic conductivity of 300 ft/d estimated for well 299-E25-45 because of the higher silt content at the top of the water table. The increased silt made it necessary to use a 10-slot screen at this well, compared to a 20-slot screen at well 299-E25-45.

The higher silt content in this well, and the low estimate of hydraulic conductivity at well 299-E25-45 (300 ft/d) may reflect a variation in hydrogeologic conditions slightly south and east of the vault locations.

3.0 WELL 299-E25-45

3.1 GENERAL DRILLING INFORMATION

Well 299-E25-45 was also drilled using the ODEX drilling method. Refer to Section 2.1 for a general description of the ODEX method.

All cuttings and purgewater from the borehole were contained and disposed in accordance with WHC procedures. Temporary carbon steel casing was used to keep the borehole open while drilling. During drilling non-petroleum based tool and drill string lubricants were used.

9313090.0471

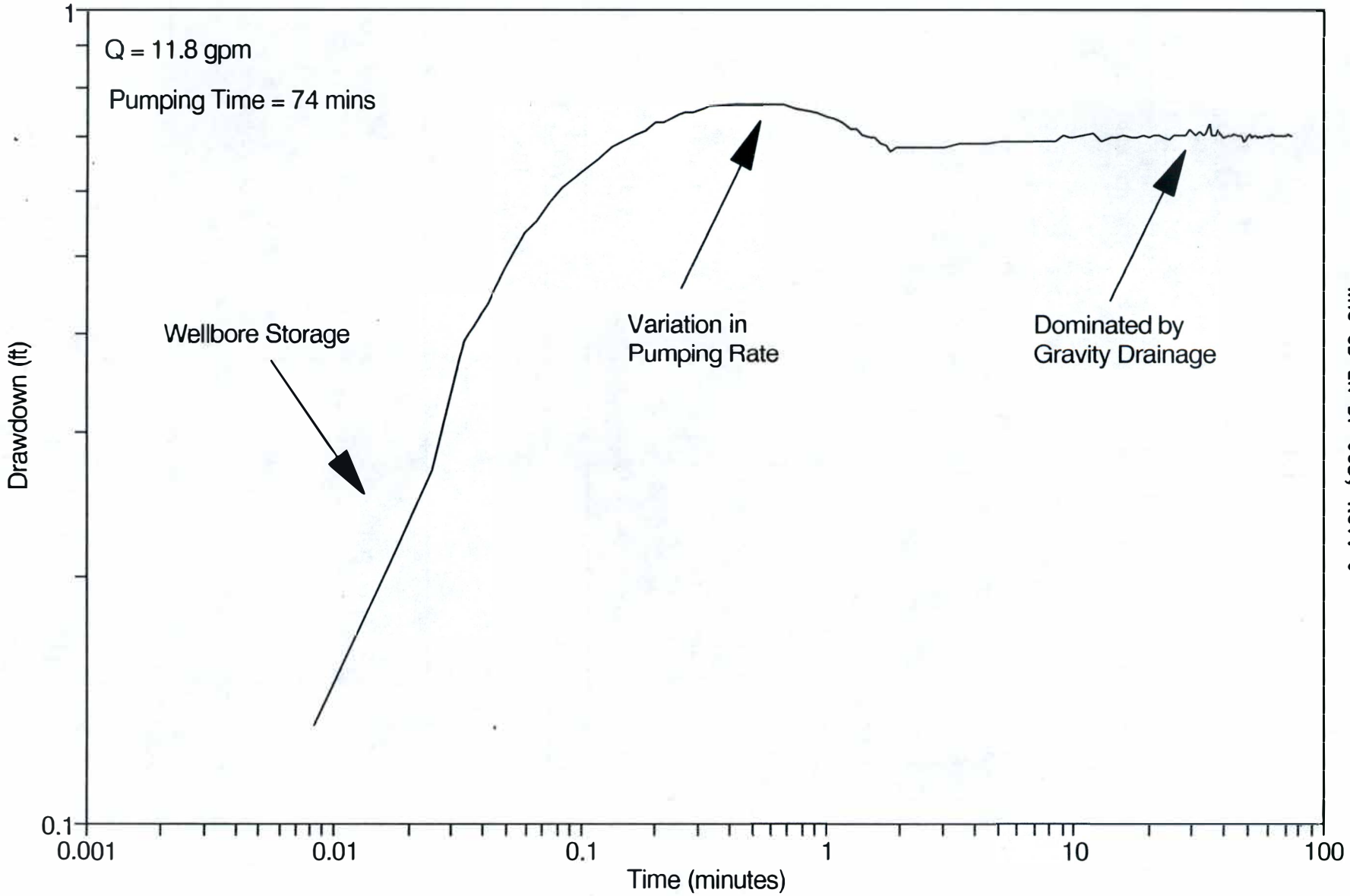

Figure 3. Development Drawdown Data for Well 299-E25-44.

3.2 299-E25-45 DRILLING INFORMATION.

Drilling began May 5, 1992, when the 12-in. starter casing was installed with a backhoe, and was completed on June 30, 1992, when total depth was reached at 297.65 ft bls. The actual drilling time took about 9 days. The water level measured 272 ft bls. Total casing lengths of 297.15 ft of 8-in-dia, 172.74 ft of 10-in-dia, and 11.61 ft of 12-in-dia temporary carbon steel were used to reach total depth. No water was added to the borehole to facilitate drilling.

The Well Summary Sheet in Appendix A provides an as-built diagram that graphically illustrates both the final well configuration, and a brief description of the borehole geology. The Borehole Log (Appendix A) presents a graphical representation of the geology, and includes detailed lithological descriptions and collection intervals for the sediment samples.

Well 299-E25-45 was logged with a natural-gamma geophysical probe on July 1, 1992, after the well was at total depth. The geophysical log from the survey is presented in Appendix A.

Samples were collected continuously during drilling operations at well 299-E25-45. Generally, samples were taken every 5 ft for lithologic description and for performing laboratory tests for moisture content, calcium carbonate ($CaCO_3$) content, and radioactivity. Three split spoon samples were collected at the depth intervals specified in Table 1, to provide more detailed lithologic and stratigraphic information. No sieve analyses were performed on any of the samples.

Table 1. Split Spoon Sample Depths for Well 299-E25-45.

Well name	Depth interval (ft)
299-E25-45	103 to 105
	172 to 174
	267 to 269

Sediment samples are archived at the Hanford Geotechnical Sample Library in the 2101-M Building. Analytical results for the soil samples are presented in Appendix B.

During drilling, sediments samples and the wellhead were monitored onsite with radiation detection meters and organic vapor analyzers. All meter readings were below any safety and health action levels.

3.3 WELL COMPLETION

Permanent 4-in-dia type-304 stainless steel casing and 20-slot (0.020-in) continuous wire-wrap screen were then installed about July 7, 1992. Factory welded centralizers were placed approximately every 40 ft along the 20-ft joints of permanent casing. Total screen and casing length measured 292.65 ft, not including 3.05 ft of stickup at ground surface. The temporary

9313090.0473

8-in. casing was backpulled to 265.8 ft bls while the borehole was filled with 10-20 mesh silica sand. The water level at this time was about 271.6 ft bls.

While backpulling the temporary 8-in. casing with hydraulic jacks, about 32 ft of 10-20 mesh silica sand was added to 265.8 ft bls; an annular seal of bentonite pellets was placed to 261.5 bls; bentonite crumbles were added to 11.8 ft bls; and the borehole sealed to 2.0 ft bls with a Portland cement grout. Later, a concrete surface pad, four protective posts, 6-in-dia protective casing, and a locking cap were installed. The well was surveyed December 30, 1992 (Appendix A).

3.4 WELL DEVELOPMENT AND SAMPLE PUMP INSTALLATION

Well 299-E25-45 was developed on August 27, 1992, with a submersible electric pump and a transducer. Groundwater was pumped at a flow rate of 11.2 gal/min. About 250 gal of water were removed from the well before a reaching a turbidity value of 4.8 NTU. All development water was contained. The results of the well development tests are summarized in Appendix C.

The submersible pump was then removed from the well and a permanent Hydrostar sampling pump installed on August 27, 1992. The sampling pump intake was set at 290.8 ft below the top of the casing, which is about 15 ft below the phreatic surface. The development and pump installation data are presented in Appendix C.

3.5 AQUIFER TESTING

Instantaneous slug injection and withdrawal tests were performed at well 299-E25-45. Water-level changes were also monitored during well development using a transducer and data logger system. Groundwater was discharged at a constant rate from the well at 11.2 gpm for 19 min. After this time the development criteria of $\leq$5 NTU was achieved and pumping terminated. Water-level recovery was monitored for 42 min. Appendix C contains test data and information sheets for the well development results.

Test Analysis

The time of development (19 min) precluded the use of the development data for analyzing the aquifer transmissivity. The slug withdrawal data was analyzed using the Bouwer and Rice method (1976), and provided an estimated hydraulic conductivity of 300 ft^2/d (Figure 4). The injection portion of the test was not useable because of excessive water level disturbances created when the slugging rod injected. Figure 5 shows the terminology used for the Bouwer and Rice analysis, and some of the input parameters for the analysis.

As stated in the aquifer analysis section for well 299-E25-44 (Section 2.5), this hydraulic conductivity value is less than the greater than 1,000 ft/d values reported for constant discharge tests at other GTF wells (e.g., 299-E25-33; DOE-RL 1992). This variation may represent a change in hydrogeologic conditions slightly to the south and east of the other downgradient well locations.

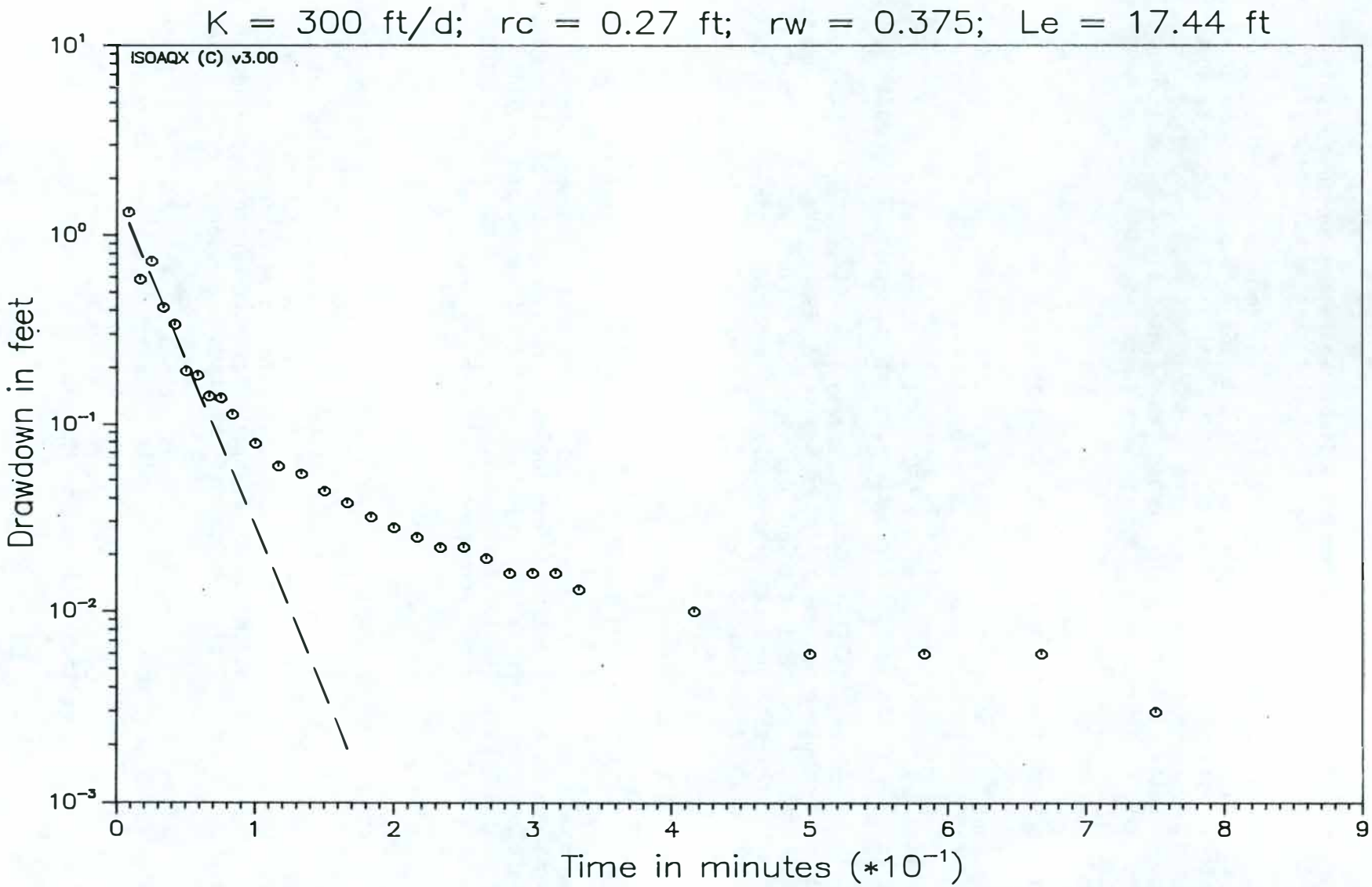

Figure 4. Slug Withdrawal Analysis for Well 299-E25-45.

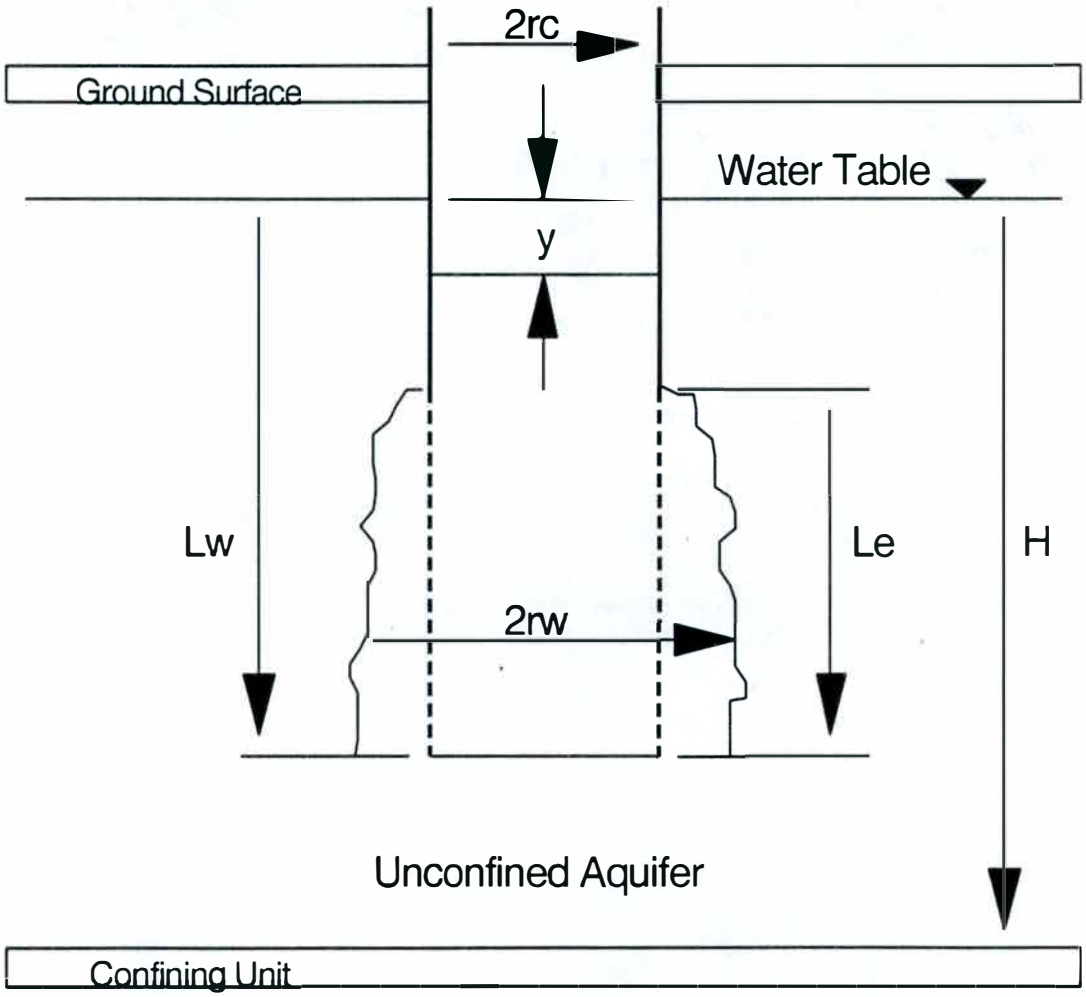

Figure 5. Terminology Used for the Bouwer and Rice Analysis Method.

4.0 REFERENCES

Bouwer H., and R. C. Rice, 1976, "A Slug Test for Determining Hydraulic Conductivity of Confined Aquifers with Completely or Partially Penetrating Wells", *Water Resources Research*, v 12, no. 3, pp 423-428.

DOE-RL, 1992, *Grout Treatment Facility Dangerous Waste Permit Application*, DOE/RL-88-27, Rev. 2, U.S. Department of Energy, Richland Field Office, Richland, Washington.

Ecology, EPA, and DOE, 1989 *et seq.*, *Hanford Federal Facility Agreement and Consent Order*, State of Washington Department of Ecology, U.S. Environmental Protection Agency, U.S. Department of Energy, Olympia, Washington.

EPA, 1989, "Interim Status Standards for Owners and Operators of Permitted Waste Facilities", Title 40 Code of Federal Regulations, Part 265, U.S. Environmental Protection Agency, Washington, D.C.

WHC, 1988, *Environmental Investigations and Site Characterization Manual*, WHC-CM-7-7, Westinghouse Hanford Company, Richland, Washington.

WHC, 1989, *Interim Status Ground-Water Monitoring Plan for the Grout Treatment Facility*, WHC-SD-EN-AP-006, Rev. 0, Westinghouse Hanford Company, Richland, Washington.

WHC, 1991, *Generic Specification Groundwater Monitoring Wells, Project W-017H*, WHC-S-014, Rev. 6, Westinghouse Hanford Company, Richland, Washington.

9313090.0477

APPENDIX A

DRILLING AND CONSTRUCTION DATA

9313090.0478

CONTENTS

Well 299-E25-44 Drilling and Construction Data A-1
Well 299-E25-45 Drilling and Construction Data A-17

9313090.0429

WHC-SD-EN-DP-058, Rev. 0

WELL CONSTRUCTION REPORT

VALIDATED KDR 1/11/92 SIGNATURE/DATE

Specification No. WHC-S-014 Rev No. 87 (BRT 1-13-93)

ECNs 166752, 172209, 150137, 150138, 119462, 150132, 164222, 127439, 150139, 166757, 127440, 150143 (KDR 5/19/92)

Project W-017 / LTBG Grout

Location South of Grout

Drilling Company Jensen / ICEH

Driller D. Mingo

Other (Companies) HEPCO, WHC

Geologist(s) Mark D. Sweeney, KD Reynolds, WHC, Nancy Rollantyne (Ebasco), BRT 1-13-93 J.A., Brett R. Thompson (M.C.E.), J.A. Coates (WHC) ED. DAFUSE (WHC)

Well No. 299-E25-99 Temp. Well No.

Coordinates N 135,656.934 E 576,110.133

Casing Elev. 675.29' top of casing Ground Elev. 672.90' top of brass cap

Drilling Method

			Initials	Date
Verification Method	VISUAL OBSERVATION			
Criteria	WHC-S-014 5.2, 5.3, 7.5 EII 6.7 SECT. 6.2			
Rotary	Air X (Order)	Mud	KDR	5/19/92
Cable Tool	D NA	H NA	NA	NA
Drilling Fluid	NA	NA	NA	NA
Other	BACKHOE 0-15	NA	MDS	5-6-92

Geophysical Logging

Sondes	Interval	Date
Gross Gamma	~~285.1'~~ 3.3' - ~~0~~ 4/22/92	6/2/92

Completion Data

Drilled Depth 293.3 (BRT 1-9-93 for MD survey)

Completed Depth 287'

Date Started ~~5/6/92~~ ~~5/4/92~~ BRT 1-4-93 5/6/92

Date Completed 6/4/92

Static Water Level/Date 269.15/6-2-92

~~269.4/5-29-92~~

Aquifer Testing

Type Instantaneous Slug

Flow Meter I.D. No. -NA-

Cal. Due Date

Length of Test

Volume Pumped

Drawdown

Date of Test

Completion Results

Cleaning

Verification Method VISUAL OBSERVATION / DIRECT OBSERVATION

Criteria WHC-S-014 4.2.2, 7.6, 7.7 WHC-CM-7-7

	Initials	Date
Drilling Tools/Rig	Backhoe MDS, Rig KDR	5/5/92 / 5/19/92
Temporary Materials	MDS	5/29/92
Permanent Materials	MDS	6/3/92

Screen

Type	Length	Slot Size
4" Stainless Steel	20.09'	0.010

Depth(s) 20.92' - 265.83' w/o end cap

Verification Method STEEL TAPE MEASUREMENT

Criteria WHC-S-014 4.2.3, 4.2.5, 12.2.1, 4.2.1

Initials MDS Date 6/3/92

Material Storage/Packing

Verification Method VISUAL OBSERVATION

Criteria WHC-S-014 7.2

	Initials	Date
Mtl. Handling/Storage	MDS	6/3/92
Material Packing	MDS	6/3/92

Lubricants/Additives

Verification Method VISUAL OBSERVATION

Criteria WHC-S-014 7.2

	Identify	Initials	Date
Additives	Rock oil	MDS	8/25/92
Lubricants	Well Command	MDS	5/25/92

Straightness Test

Verification Method VISUAL OBSERVATION

Criteria WHC-S-014 8.2

Initials MDS Date 6/2/92

9313090.0980

WELL CONSTRUCTION REPORT
(continuation sheet) Well # 299-E25-44

Page 2 of 2

Casing (permanent)

Type	Size	Placement
4" SCHEDULE 5 STAINLESS	4"	265.83 - -3.97
		-
		-
		-

Verification Method MEASURING USING STEEL TAPE

Criteria WHC-S-014 4.2.1, 4.2.4, 4.2.5, 12.2.1

Initials WAS Date 6/3/92

Well Protection

Verification Method VISUAL OBSERVATION

Criteria WHC-S-014 4.2.10

	Initials	Date
Protective Posts	ECL	12/18/92
Protective Casing	ECL	12/18/92
Site Restored	ECL	12/18/92
Cap, Hasp and Lock	ECL	12/18/92
Surface Pad	ECL	12/18/92

Annular Seal/Filter Pack

Verification Method MEASURING USING STEEL TAPE Criteria WHC-S-014 4.2.6, 4.2.7, 4.2.8, 4.2.9, 5.3.1

Type	Interval	Volume	Initials	Date
20-40 SAND	287' - ~~285~~ 263.0'	10.64 ft³	WAS	6/3/92
BENTONITE ~~CRUMBLES~~ PELLETS was water	263.0' - 260.5'	1.55 ft³	WAS	6/3/92
BENTONITE CRUMBLES	260.5' - 9.9'	96.21 ft³	WAS	6/3/92
PORTLAND CEMENT.	9.9' - 3.6'	8.10 ft³	WAS	6/3/92

Well Survey/Labeling

Verification Method REVIEW OF SURVEY REPORT

Criteria WHC-S-014 3.4

	Initials	Date
Measurement Point/Surveyed	BAT	1-8-93
Protective Casing/Brass Cap Surveyed	BAT	1-8-93
Well Number Stenciled	ECL	12/18/92
Brass Cap Labeled	ECL	12/18/92

Pump Installation

Verification Method VISUAL OBSERVATION

Criteria WHC-S-014 4.2.11, 4-2.2.

	Initials	Date
Pump Decon/Prep	JAC	9-2-92
Installed	JAC	9-2-92
Pump Tested	JAC	9-2-92

Other (initial if performed)

_____ Well Abandonment _____ Downhole TV Inspection NB Complete As-Built Diagram, Driller's/Geologist's Logs

9-2-92 JAC Well Development

Comments/Remarks

Reviewed By (Sign/Print Name) Kent Reynolds / [signature] A-2 Date 1/11/93

9313090.0981

WELL SUMMARY SHEET

Boring or Well No. 299-E25-44

Sheet 1 of 2

Location 299-E25-44

Project W-017/LLBG.

Elevation 672.90' ground elevation

Drilling Contractor KEH/JENSEN

Driller D. MINGO

Drilling Method and Equipment BACKHOE/ODEX ROTARY

Prepared By WD SWEENEY/ (Sign/Print Name) Date 5/6/92

Reviewed By EDWARD C. RAFUSE / Edward C. Rafuse (Sign/Print Name) Date 06/08/92

CONSTRUCTION DATA: Description	CONSTRUCTION DATA: Diagram	Depth in Feet	GEOLOGIC/HYDROLOGIC DATA: Graphic Log	GEOLOGIC/HYDROLOGIC DATA: Lithologic Description
12"Ø OD CARBON STEEL CASING SET @ 13.8	10.18	0		
NO SHOE - TEMPORARY		5		SAND
CASING		10		"
PORTLAND CEMENT: 9.9'-3.6'		15		SANDY GRAVEL
10"Ø OD CARBON STEEL	12.92	20		SAND W/ SCATTERED PEBBLES
CASING SET @ 140.44		25		
0.89' SHOE - TEMPORARY		30		
CASING	19.98	35		
		40		
		45		
		50		
	19.55	55		
8"Ø OD CARBON STEEL		60		
CASING SET @ 292.3		65		FINING SEQUENCE 65-75'
0.71' SHOE - TEMPORARY		70		"
CASING	20.00	75		
		80		SAND
		85		(SILTY ZONE @ ≈ 82') SAND
		90		SAND
	19.93	95		(SILTY ZONE @ 90-91') SAND
		100		SAND
4"Ø ID STAINLESS STEEL		105		"
CASING SET @ 265.83 -		110		SAND (TRACE PEBBLES)
+ 3.97. PERMANENT		115		
CASING WITH 20.09'	19.98	120		
4" ID CONTINUOUS WIRE		125		
WRAP SCREEN		130		
		135		
	19.95	140		
		145		
		150		
	19.99	155		
		160		

WHC-SD-EN-DP-058, Rev. 0

WELL SUMMARY SHEET

Boring or Well No. 299-E25-44

Sheet 2 of 2

Location 299-E25-44

Project W-017/LLBG

Elevation 672.90' ground elevation

Drilling Contractor JENSEN

Driller D. MINGO

Drilling Method and Equipment ODEX ROTARY

Prepared By MD SWEENEY (Sign/Print Name) Date 6/4/92

Reviewed By EDWARD C. RAFUSE (Sign/Print Name) Date 08/08/92

CONSTRUCTION DATA

Description	Diagram
8" Ø OD CARBON STEEL CASING SET @ 292.3	19.95
0.71 SHOE - TEMPORARY CASING	22.02
BENTONITE CRUMBLES 260.5' - 9.9'	19.96
	19.96
	19.96
STATIC WATER LEVEL: 269.15' ON 6-2-92	
PORTLAND CEMENT: 9.9' - 3.6'	
BENTONITE CRUMBLES: 260.5' - 9.9'	
BENTONITE PELLETS: 263.0' - 260.5'	
20-40 SILICA SAND: 287.0' - 263.0'	
BACK FILL: 293.3' - 287'	
TOP OF SCREEN: 265.83'	
TOP OF SAND: 263.0'	
BOTTOM OF SCREEN: 285.92'	
SCREEN INTERVAL - 265.83' - 285.92'	

GEOLOGIC/HYDROLOGIC DATA

Depth in Feet	Graphic Log	Lithologic Description
165		SAND
170		165 - 173 GRANULAR TO PEBBLE SAND
175		" " "
180		173 - 180 GRAVEL - PEBBLE/COBBLE
185		180 - 218 GRAVEL
190		
195		
200		
205		
210		
215		
220		218' PEBBLE/COBBLE GRAVEL
225		220 - 261' PEBBLE COBBLE GRAVEL.
230		
235		
240		
245		
250		
255		
260		261' - 263.3' SAND; MINOR PEBBLES.
265		263.3' - 263.5' SILT; 263.5' - 264' SILT
270		W/ SAND + PEBBLY SAND INTERBEDS; 264' - 265.3' SAND; MINOR PEBBLES.
275		269' - 270' SILTY SAND.
280		270' - TD SAND.
285		No dia
290		TD: 293.3'
295		

KAISER ENGINEERS HANFORD	WHC-SD-EN-DP-058, Rev. 0 SURVEY DATA REPORT	Request No. —9 2 4—3 1 0
Project/W.O. No. W-017H	Title 200E AREA WELL SURVEY	File No. 2 9 9—E 2 5
KEH Job No. ER2153	Prepared By V. Coyne / Date 9/21/92	Reviewer [signature] 1 1

DESCRIPTION OF WORK	ACCEPTABILITY (Within Plan Tolerance)	DISTRIBUTION	
Horizontal and vertical survey of well	Yes [X]	Survey File	OR
299-E25-44.	No [ ]	Field Project File	1
	NA [ ]	P. Collier	1
	TBD by Requestor [ ]	D. Weekes	1
		J. Rieger	1
		LA Dietz	1

SURVEY RESULTS AND COMMENTS

	2E-27	2E-31
Control Monuments	N:39,499.96	N:37,321.22
	W:47,300.12	W:47,300.34

Vertical Control Monuments used to establish elevations on wells were part of a vertical network with misclosure of all run sections less than 8mm $\sqrt{k}$. Holding USC & GS benchmarks J-317, K-317 and L-317.

WELL NO.	COORDINATES		VERT. DATUM	ELEVATIONS		
	PLANT 200E DATUM FEET	WCS83S METERS		TOP BRASS CAP	TOP OF HYDRO STAR PLATE	TOP OF CASING
299-E25-44	N:39,930.35 W:45,222.74	N:135,656.934 E:576,110.133	NGVD.29	672.90	675.31	675.29

KEH-159.1 (6-84)

9313090.0489

BOREHOLE LOG

VALIDATED KDR 11/30/92 SIGNATURE/DATE

Boring or Well No. 299-E25-44

Sheet 1 of 9

Location 299-E25-44

Project W-017 / ~~LLBG~~ GRAVEL

Elevation 673' ground elevation

Drilling Contractor KEHI / JENSEN

Driller D. MINGO.

Drilling Method and Equipment BACKHOE / ODEX ROTARY

Prepared By M DOWDENEY / [signature] (Sign/Print Name) Date 5/6/92

Reviewed By EDWARD C. RAFOS / [signature] (Sign/Print Name) Date 06/03/92

Depth (feet)	Sample Type and No.	Sample Blows or Recovery	Graphic Log	Sample Description: Soil Classification, Particle Size Distribution, Color, Moisture Content, Sorting, Angularity, Mineralogy, Reaction to HCl.	Comments: Depth of Casing, Drilling Rate, Casing Size & Type, Bit Size, Water Level
		Backhoe		0-5 EOLIAN SAND.	
5'	1 Archive 1 Moist/CaCO3 1 Rad.	Backhoe		5' SAND	5' @ [illegible] 5/6/92
				GRAVEL - 5% SAND 85% SILT 5%.	
				MC. 25% CG - 5%	STRONG RXN TO HCl.
				FC 75% MC - 20%	DRY - POORLY SORTED.
				FG - 75%	
				GRAVEL - BASALT - 85%, FELSIC - 5% QTZ - 5%	
				5% UNDIFF PLUTONICS, ROUNDED-SUBROUNDED	
				SAND: 15% BASALT 70% QTZ 15% FELSIC,	
				ANGULAR SUBANGULAR, SUBROUNDED. mod reac to HCL	
10'				COLOR WET 10YR 3/2 VDK GRAYISH BRN. DRY - 10YR 4/3 BRN.	
	2A 1m 1R	Backhoe		10' SANDY GRAVEL	
				GRAVEL - 30% SAND 69% SILT < 1%.	10' @ 0742 5/6/92
				CF - 2% CG COLOR WET - 2.5YR 3/0 BLACK	
				MC 48% MG. MOIST	
				FC - 52% FG. COLOR DRY - 2.5YR 4/0 DK GRAY.	
				GRAVEL - 85% BASALT FELSIC 10%, 5% QTZ	
				PLUTONIC - SUBROUNDED ANGULAR - SUBANGULAR	NO RXN TO HCL.
				SAND: 90% BASALT, 5% FELSIC, 5% QTZ,	MODERATELY WELL SORTED
				ANGULAR SUBANGULAR SUBROUND.	END SHIFT 5/6/92
15'	2 Archive 1 Rad 1 Moist	Air Rotary continuous sampling		10'-15' Sand A/A w/occ pbl	15' @ 1350 5/20/92
				lag - pbls at 14'-15'	
	2A 1R 1m			15-20' Sand A/A	
20'				A-6	

Note: scale change

BOREHOLE LOG

Boring or Well No. 299-E25-44

Sheet 2 of 9

Location 299-E25-44 - Grout Pit

Project W-017 / Grout

Elevation 673' ground elevation

Drilling Contractor Jensen

Driller D Mingo

Drilling Method and Equipment Mder / Air Rotary

Prepared By KD Reynolds (Sign/Print Name)

Date 5/26/92

Reviewed By Edward C. Rafuse (Sign/Print Name)

Date 06/03/92

Depth (20')	Sample Type and No.	Sample Blows or Recovery	Graphic Log	Sample Description (Soil Classification, Particle Size Distribution, Color, Moisture Content, Sorting, Angularity, Mineralogy, Reaction to HCl.)	Comments (Depth of Casing, Drilling Rate, Casing Size & Type, Bit Size, Water Level)
		Air Rotary ↓		Sand - 100% stnd (20'-60')	Manford granular sands
				D. color - 2.5Y 6.2 lt brownish gray	
				W. color - 2.5Y 4.0 dk gray	
				m-w srt sb ang-sbrnd, v dry, uncons	
25'	2A 1m 1R			Sand c 50-40% sme granular 60-70% mafic	
				m - 20-30% 30-40% felsic	
				f-v 20-30%	
				No HCl Reac	
				Scat pbls	
30'	2A 1m 1R				
				Sand A/A (20'-60')	
35'	2A 1m 1R				
40	2A 1m 1R				
45'	2A 1m 1R				
50'	2A 1m 1R				
55'	2A 1m 1R				
60'	2A 1m 1R				End Shift 5/26/92 @ 59.7'

A-6000-382 (04/90)

9313090.0486

BOREHOLE LOG

Boring or Well No. 299-E24-44

Sheet 3 of 9

Location 299-E25-44 / Grout Pit

Project W-017 / Grout

Elevation 673' ground elevation

Drilling Contractor Jensen

Driller D. Mingo

Drilling Method and Equipment Odex / Air rotary

Prepared By KD Reynolds (Sign/Print Name) Date 5/27/92

Reviewed By Edward C. Rafuse (Sign/Print Name) Date 06/03/92

Depth (60')	Sample Type and No.	Sample Blows or Recovery	Graphic Log	Sample Description: Soil Classification, Particle Size Distribution, Color, Moisture Content, Sorting, Angularity, Mineralogy, Reaction to HCl.	Comments: Depth of Casing, Drilling Rate, Casing Size & Type, Bit Size, Water Level
		Air Rotary → continuous samples		Sand 60-65' A/A 2.5Y 4/0 dry	
65	2A 1m 1R			65'-75' fining sequence w/ color change lighter in color Sand 100% scat cobbles dry color: 2.5Y 5/2 grayish brown wet color: 2.5Y N3/ v dk gray 8' mod-p sort, sb ang-s rnd, uncons no-to scat tr (ind grain) gray	
70	2A 1m 1R			Sand c-to grain 20-30% } 50-60% mafic m- 40-30% } 40-50% felsic vf-f 40-50% Tr slt	
75	2A 1m 1R			75'-85' Sand 100% snd dry color: 2.5Y 5/0 gray to gray blk wet color: 2.5Y 3/2 v dk grayish brn mod sort sb-ang-sbrnd, uncons, tr HCl reax in thn bds w/lighting in color (tn)	
80	2A 1m 1R			Sand c-grain 30-50% } generally inc m- 20-30% } 60-70% mafic vf-f 20-30% 30-40% felsic (slty zn) ≈ 82' tr slt in thn bds - inc felsic content	
85	2A 1m 1R			85-90' gradual A/A Sand general decrease vf-f grain content dec to 5-15%	
90	2A 1m 1R			90'-100' → Sand (slightly damp) A/A inc vf-f grain content up to 30% inc in tn color - (90'-95') due to felsic grain size Δ tr mica at 90'	at 89' tr to slightly damp (slty zn @ 90'-91')
95	2A 1m 1R				
100	2A 1m 1R				

A-6000-382 (04/90)

9313090.0487

BOREHOLE LOG

Boring or Well No. 299-E25-44

Sheet 4 of 9

Location 299-E25-44 / Grout Pit

Project W-017 / Grout

Elevation 673' ground elevation

Drilling Contractor Jenson

Driller D. Mingo

Drilling Method and Equipment Air Rotary / Odex

Prepared By KD Reynolds / KD Reynolds (Sign/Print Name) Date 5/27/92

Reviewed By Edward C. Rafuse / Edward C. Rafuse (Sign/Print Name) Date 06/03/92

Depth (100')	Sample Type and No.	Sample Blows or Recovery	Graphic Log	Sample Description: Soil Classification, Particle Size Distribution, Color, Moisture Content, Sorting, Angularity, Mineralogy, Reaction to HCL	Comments: Depth of Casing, Drilling Rate, Casing Size & Type, Bit Size, Water Level
		Air Rotary ↓ Continuous Sampling		100-103' Sand A/A	
					Samples mod-sl damp
				103' → 131' Sand 100% sand w/ occ pbl	
105'	2A 1M 1R			dry color: 2.5Y 5/2 grayish brown sl⅓p	
				wet color: 5Y 2.5/2 blk sl⅓p	
				mod srt → sbang to sbrnd ip, uncons	
				~~sca~~ kr2 mod HCL reax, sl damp-mod	
110'	2A 1M 1R			damp ip	
				Sand 10-15% c to gran } 40-50% mafic * NOTE	
				20-40% m } 50-60% felsic	
				70-50% uf-f	
				tr-10% slt	
115'	2A 1M 1R			inc mica % dec. grain sz	
				w/depth - tr pbls-cbls	
				* dec. mafic % At 125	
				20-30% mafic	
				70-80% felsic	
120'	2A 1M 1R				
125'	2A 1M 1R				
130'	2A 1M 1R			131'-140' Sand 100% sand (tr pbl occ)	
				dry color: 2.5Y 6/2 lt brownish gray ⅓p in part	
				wet color: 2.5Y 5/2 grayish brown	
				mod-wsrt, sbrnd to sbang, uncons	
135'	2A 1M 1R			dec HCL reax, tr-scat mica	
				Sand c 20-30% } 30% mafic	
				m 40-50% } 70% felsic	
				uf-f ~~40~~-20%	Down size from 10"
	2A 1M 1R			slt Tr A9	to 8" csg At 141'
140'					

BOREHOLE LOG

Boring or Well No. 299-E25-44

Sheet 5 of 9

Location 299-E25-44/ Grout Pit

Project W-017 / Grout

Elevation 673' ground elevation

Drilling Contractor Jensen

Driller D. Mingo

Drilling Method and Equipment Air Rotary / Odex

Prepared By KD Reynolds (Sign/Print Name) Date 5/28/92

Reviewed By Edward C. Rafuse (Sign/Print Name) Date 06/03/92

Depth (140')	Sample Type and No.	Sample Blows or Recovery	Graphic Log	Sample Description: Soil Classification, Particle Size Distribution, Color, Moisture Content, Sorting, Angularity, Mineralogy, Reaction to HCl	Comments: Depth of Casing, Drilling Rate, Casing Size & Type, Bit Size, Water Level
	2A 1m 1R	Air Rotary → continuous sampling		140-165' Sand gravel A/A	Start Shaft 5/28/92
				w/ Pbl lrg at 143 and at	@ 141'
				148' sl to mod HCL reax	Hanford Fm Sand
145'	2A 1m 1R				
150'	2A 1m 1R				
155'	2A 1m 1R				
160'	2A 1m 1R				
				165'-173' Granular to pbl Sand 80% Sand 20% granular to pbl sz	
165'	2A 1m 1R			Dry Color: 2.5Y 7/3 lt gray to pale yellow	
				Wet Color: 2.5Y N4 dk gray	
				mod-p srt, sb rnd-rnd rip tr sb ang, dry to sl moist	
				uncons, sl-mod HCL reax, tr mica	
				Sand C 40-50%	40-50% mafic
170'	2A 1m 1R			granular Sand - 10-20%	60-50% felsic
				m 30%	Lower Hanford Gravel
				vf-f 20-30%	at 173'
				Tr slt	
				173'-180' Gravel - pbl cbl 70% gravel 30% Sand	
175'	2A 1m 1R			Dry Color: 5Y 6/1 lt gray	
				wt Color: 5Y 4/1 dk gray	
				p srt, sb rnd-sb ang rp, uncons, dry	
				NO HCL reax, Sand C - 20%	60-50% mafic
				gravel 70% mafic A-10 m - 40%	40-50% felsic
180'				30% felsic vF-F - 30%	
				tr slt 10%	

9313090.0489

BOREHOLE LOG

Boring or Well No. 299-E25-44

Sheet 6 of 9

Location 299-E25-44 / Grout Facility

Project W-017 / Grout

Elevation 673' ground elevation

Drilling Contractor Jensen

Driller D. Mingo

Drilling Method and Equipment Air Rotary / Odex

Prepared By KD Reynolds / KD Reynolds (Sign/Print Name) Date 5/28/92

Reviewed By Edward C. Rafuse / Edward C. Rafuse (Sign/Print Name) Date 06/03/92

Depth (180')	Sample Type and No.	Sample Blows or Recovery	Graphic Log	Sample Description: Soil Classification, Particle Size Distribution, Color, Moisture Content, Sorting, Angularity, Mineralogy, Reaction to HCl.	Comments: Depth of Casing, Drilling Rate, Casing Size & Type, Bit Size, Water Level
	2A 1M 1R	Air Rotary → Continuous Sampling			
				↑ 180' - ~~215~~ KR 218' Gravel	
185'	2A 1M 1R			gravel w/ sandy matrix same as above	
				↓	
				Gravel pbl-cbl 60-70% gravel 30-40% sand	
190'	2A 1M 1R			Dry color: 2.5Y 5/0 gray to gray-brn	SSP
				wet color 2.5Y 4/0 dk gray	
				p-mod srt, sbrnd-sbang, uncons, dry	
				no HCL reac	
195'	2A 1M 1R			gravel 80-70% mafics, sand c 60% m 10% vf-f 30-30% } 50% mafic 50% felsic; 20-30% felsic	
200'	2A 1M 1R			↓	
205'	2A 1M 1R				
210'	2A 1M 1R				
				218'-220' pbl·cbl gravel 70% gravel 30% sand	
215'	2A1 1M 1R			Dry 2.5Y 5/0 gray	
				wet 2.5Y 4/0 dk gray	
				Dred A/A	
				w/ Dred pbl gravel sand grain - 25-20% c - >10% m - 10% vff - 40% }	
220'					

A-6000-382 (04/90)

9313090.0190

BOREHOLE LOG

Boring or Well No. 299-E25-44

Sheet 7 of 9

Location 299-E25-44 / Grout Pit

Project W-017 / GTE

Elevation 673' ground elevation

Drilling Contractor Jensen

Driller D. Mingo

Drilling Method and Equipment Air Rotary / Odex

Prepared By K.A. Rynell / K.D. Reynolds (Sign/Print Name) Date 5/28/92

Reviewed By Edward C. Rafuse (Sign/Print Name) Date 06/03/92

Depth (220')	Sample Type and No.	Sample Blows or Recovery	Graphic Log	Sample Description: Soil Classification, Particle Size Distribution, Color, Moisture Content, Sorting, Angularity, Mineralogy, Reaction to HCl.	Comments: Depth of Casing, Drilling Rate, Casing Size & Type, Bit Size, Water Level
	2A 1m 1R	Air Rotary → Continuous Sampling		220-261' Pb/cbl gravel A/A	
225'	2A 1m 1R				
230'	2A 1m 1R				
235'	2A 1m 1R				
240'	2A 1m 1R				
245'	2A 1m 1R				
250'	2A 1m 1R				
255'	2A 1m 1R				
260'				gravels base right at 260.	EM

9313092.0191

* NOTE: SCALE CHANGE.

BOREHOLE LOG

Boring or Well No. 299-E25-44

Sheet 8 of 9

Location 299-E25-44

Project W-017 / GROUT

Elevation 673' ground elevation

Drilling Contractor JENSEN

Driller D. MINGO

Drilling Method and Equipment AIR ROTARY / ODEX

Prepared By M. SWEENEY (Sign/Print Name) Date 6/2/92

Reviewed By EDWARD C. RAPOSE (Sign/Print Name) Date 06/03/92

Depth (260')	Sample Type and No.	Sample Blows or Recovery	Graphic Log	Sample Description: Soil Classification, Particle Size Distribution, Color, Moisture Content, Sorting, Angularity, Mineralogy, Reaction to HCl.	Comments: Depth of Casing, Drilling Rate, Casing Size & Type, Bit Size, Water Level
		AIR ROTARY		~~261-2~~ 261-263.3 SAND; MINOR PEBBLES 10-15% PEBBLES 85%-90%	END SM. CT @ 261-
				SAND: LITTLE OR NO SILT.	5/28/92
261'				DRY COLOR 2.5Y 6/2 LT. BROWNISH GRAY	1ST USE REDUCER
				WET COLOR 2.5Y 4/2 DK. LIGHT BRN.	RINSED IN LANDMAST
				POORLY SORTED, SAND SUBROUNDED TO SUB.	HANDLED OR PERMY
				ANGULAR, MAINLY FINE MAT. OF WHITE	RINSED DURING SAMPLE
262'				WHITE MICA: 1-3% UNIFORM TO HCL RXN	AND WIDE SIZE RANGE
				TO HCL. ALL RXN ON A FEW ISOLATED	SUGGESTS REWORKED RINSED
				GRAINS. PEBS: 80% BASALT, 20% QTZ/FELSIC	MAYBE SPLIT TUBE WILL
				SAND: 70/30 FELSIC/BASALT CS 35% MS 30%	SAY?
263'	263-263.2			FS 35%. SPLIT SPOON SAMPLE	
	#A 1m 1R			263.3-263.5 SILT 100%.	NO LAMINATION VISIBLE.
		SPLIT SPOON		DRY COLOR: 10YR 5/3 BROWN	
				WET COLOR: 10YR 5/3 BROWN	
	3A 1m 1R SS			UNMASSIVE, WEAK RXN TO HCL	
264'				263.5-264 SILT W/SAND +	DISTINCT BANDING + LAMINATION
		AIR ROTARY		PEBBLY SAND INTERBEDS	
				15% CP 20% CG	
265'				45% MP 60% MG	
				40% FP 20% FG.	
				PEBBLES: 15% BASALT 55% QTZ 25% FELSIC	
				5% UNDIFF MAFIC SAND: 20% BASALT	
266'				60% QTZ 20% FELSICS.	
				DRY COLOR	
				264-265.3 SAND, MINOR PEBBLES.	OXIDATION ZONING ON
				MINOR SILT. SOME MICAS.	SOME FRAGS.
267'				DRY COLOR: 5Y 6/2 LT OLIVE GRAY	
				WET COLOR: 5Y 5/3 OLIVE	
				POORLY SORTED; PEBBLES: 100% BASALT	
				70% QTZ, 20% FELSIC SAND: 15% BASALT	
268'				70% QTZ, 15% FELSICS	
				CP - 90% CG - 45%	
				MP - 10% MG - 30%	
				FG - 25%	
269'				SAND: ANGULAR - SUBANGULAR	
				PEBS: SUBANGULAR - ROUNDED.	
				NO RXN TO HCL.	
				269-270 SILTY SAND	

9313090.0963

BOREHOLE LOG

Boring or Well No. 299-E25-44

E.C.W. 06/03/92 Sheet B-9 of 9

Location 299-E25-44

Project W-017/GROUT

Elevation 673' ground elevation

Drilling Contractor JENSON

Driller D. MINCO

Drilling Method and Equipment 14 in ROTARY/ODEX.

Prepared By M.D. SLATTERY (Sign/Print Name) Date 6/2/92

Reviewed By EDWARD C. ROFUSK (Sign/Print Name) Date 06/2/92

Depth (220')	Sample Type and No.	Sample Blows or Recovery	Graphic Log	Sample Description: Soil Classification, Particle Size Distribution, Color, Moisture Content, Sorting, Angularity, Mineralogy, Reaction to HCl.	Comments: Depth of Casing, Drilling Rate, Casing Size & Type, Bit Size, Water Level
	2A 1M 1R	14 in ROTARY		270' SILTY SAND.	
				SAND: 60% SILT 40%.	
				CG - 5% COLOR WET: 2.5Y 4/4 OLIVE BRN.	
				MG - 40% COLOR DRY: 2.5Y 6/4 LT YELLOW BRN.	
				FG - 55%	
				SAND: 20% BASALT, 60% QTZ, 20% FELSICS	
				ANGULAR, SUBANGULAR, SUBROUNDED.	
				ABUNDANT PYRITE. STRONG RXN TO HCL.	
275'				275' SAND.	
	2A 1M 1R			SAND 99% SILT 1%.	
				CG - 30% COLOR DRY: 5Y 5/2 OLIVE GRAY.	
				MG - 45% COLOR WET: 5Y 3/2 DK OLIVE GRAY.	
				FG - 25%	
				SAND: 15% BASALT, 50% QTZ, 30% FELSICS,	
				5% UNDIFF PLUTONICS. ANGULAR, SUB-	
				ANGULAR, SUBROUNDED. (WEAK) (MILD) RXN TO	
				HCL.	
280'				280 AS ABOVE	
	2A 1M 1R				
				285 - 290 AS ABOVE BUT	
				WITH INCREASING GRAIN SIZES.	
				CG - 50%	
				MG - 35%	
				FG - 15%.	
285	2A 1M 1R				
					293.3 2-5-92
					TO 292.2
				290' SAMPLES 2A, 1M, 1R.	

A-6000-382 (04/90)

9313090.0193

WRF-SD-FR-DP-058, Rev. 0

Westinghouse Hanford Company

LOG HEADER

VALIDATED
200-UW-1
Validation Number

Page 1 of 2

Well No. 299-E25-44 Area 200 East
Log Run #1 Log Type Gross Gamma
Elevation Datum Top of base cap Elevation 672.42'
Survey Coordinates E 580,626.74 N 136,118.23
Log Measured From Ground Surface
Location Description South of Grout Facility
Ground Surface Elevation 672.42'
Surface Temperature N/A Weather Clear-Warm

BOREHOLE INFORMATION

Driller John Johnson (Jensen Drilling)
Drill Rig Type CME55X Bit Type/Diameter Air Hammer / 8"
Borehole Diameter/Depth 12" / 118' 10" / 140.4' 8" / 292.3'
Depth Driller 292.4' Depth Logger 295.1'
Liquid Level DRY Liquid Density Air / Water
Temperature N/A

CASING RECORD

Type 12" Carbon Steel Sch. 40 Internal 0.5' - 13.8'
Type 10" Carbon Steel Sch. 40 Internal 0.0 - 140.4'
Type 8" Carbon Steel Sch. 40 Internal 0.8' - 292.3'
Type Internal
Well Screen Interval N/A
Comments: Return Grout = 72.0" Hyd
Centralizer used

A-15/16

A-6000-120 (05/98)

WRF-SD-FR-DP-058, Rev. 0

Page 2 of 2

LOG HEADER

EQUIPMENT DATA

Logging Company Pitt.
Operator(s) Alan Benson
Equipment Type Pitt Gamma
Equipment Serial No. 1001
Total Gamma Calibration Factor 1.0
Base Gross Count Rate 5.48
Calibration Method Pitt Gamma Calibration Block
Calibration Date 08/21/96
Calibration Interval 1 Year
Calibration Source Pitt Gamma Calibration Block
Detector Type NaI
Detector Serial No. 1001
Detector Size 1.75" x 1.75"
Detector Orientation Vertical
Log Interval From 295.1' To 2.0'
Speed(s) 295.1' - 140' 20.0'
140' - 2.0' 20.0'
Pre Survey Verification Position 1 Gain 2.0
Post Survey Verification Position 1 Gain 2.0
Logging Speed Position 1 60.0 fpm
Log Time 4:00 Cable Cable
Count Threshold/Measured Scale Offset 50 / N/A
Count Threshold/Measured Scale Multiplier 1.0 / 1.0
Background Count Position 1 Gain 0.0
Post Test Check Position 1 Gain 0.0
Comments: Return Grout = 72.0" Hyd
Centralizer used

Witnessed and Reviewed by: Signature and print name Alan Benson / Alan Benson Date 6/1/02

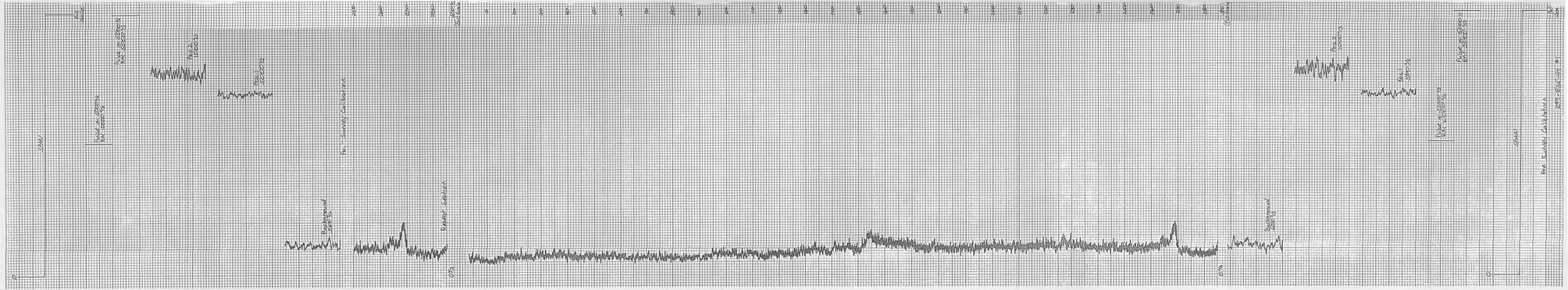
Surface
Background
Water Contact
Background
Surface
Background
Background
Surface
Background
Surface
Background
Surface

P 1 of 4

WELL CONSTRUCTION REPORT

VALIDATED KDR 1/11/93 SIGNATURE/DATE

Specification No. WHC-S-014 Rev No. 6 7 MS 1-8-93

ECNs 166752, 172209, 150137, 150138, 119402, 150132, 164223, 127439, 150130, 166757, 150143

Project W-017/~~[illegible]~~ 4/1/92 GROUT TREATMENT FAC.

Location SOUTH OF GROUT

Drilling Company JENSEN/KEH

Driller DENNIS Mingo

Other (Companies) HEPCO, MCE, Ebasco

Geologist(s) MARK D. SWEENEY

BRETT THOMPSON Nancy Ballantyne

EDWARD C. RAFUSE (WHC)

J.A. COATES WHC

Well No. 299-E25-45 Temp. Well No.

Coordinates N: 135,659.15 E: 576,185.55

Casing Elev. 678.45' Top of Casing Ground Elev. 675.74

678.46 Top of Hydrostar plate

Drilling Method

Verification Method VISUAL OBSERVATION

Criteria WHC-S-014 5.2, 5-3, 7.5, ETI 6.7 SECT 6.2

			Initials	Date
Rotary	Air 15'-297.6'	Mud NA	MDS	7/1/92
Cable Tool	D N/A	H N/A	N/A	N/A
Drilling Fluid	N/A	N/A	N/A	N/A
Other	BACKHOE 0-15	—	MDS	5/5/92

Geophysical Logging

Sondes	Interval	Date
Gamma	4.2 - 297.60	7/1/92
	-	
	-	
	-	
	-	

Completion Data

Drilled Depth 297.65'

Completed Depth 289.6'

Date Started 5/4/92

Date Completed 7/27/92 | 8/27/92 ①

Static Water Level/Date 271.9 - 6/30/92

272.0 - 6/30/92 272.1 - 7/28/92

Aquifer Testing

Type INSTANTANEOUS SLUG

Flow Meter I.D. No. NA

Cal. Due Date NA

Length of Test 1HR

Volume Pumped NA

Drawdown - NA

Date of Test 8/27/92

Completion Results

Cleaning

Verification Method VISUAL OBSERVATION/DIRECT OBSERVATION

Criteria WHC-S-014 4.22, 7.6, 7.7 WHC-CM-7-7

	Initials	Date
Drilling Tools/Rig	BACKHOE MDS. + MIG MDS Air Rotary Rig/Tools	5/5/92 6/16/92
Temporary Materials	MDS	6/16/92
Permanent Materials	E.C.L.	7/22/92

Screen

Type	Length	Slot Size
T-304 STAINLESS, CONTINUOUS	19.95'	20 SLOT

Depth(s) 289.6' - 269.35' W/END CAP

-

Verification Method STEEL TAPE MEASUREMENT

Criteria WHC-S-014 4.2.3, 4.2.5, 12.2.1, 4.2.1

Initials EOL Date 7/28/92

Material Storage/Packing

Verification Method VISUAL OBSERVATION

Criteria WHC-S-014 7.2

	Initials	Date
Mtl. Handling/Storage	E.C.L.	7/22/92
Material Packing	E.C.L.	7/22/92

Lubricants/Additives

Verification Method VISUAL OBSERVATION

Criteria WHC-S-014: 7.2

	Identify	Initials	Date
Additives	MOTOR OIL	MDS	6/16/92
Lubricants	WELL GREASE	MDS	6/16/92

Straightness Test

Verification Method VISUAL OBSERVATION

Criteria WHC-S-014 B.2

Initials MDS Date 6/30/92

A-6000-436 (09/90)

93130094.0495

VALIDATED

WELL CONSTRUCTION REPORT
(continuation sheet) well # 299-E25-45

Casing (permanent)

Type	Size	Placement
T 304 SS 20 SLOT	4"	289.6 - 269.35
T 304 (L) SS BLANK	4"	269.35 - 3.05 (AGL)
		-
		-

Verification Method MEASURING USING STEEL TAPE

Criteria WHC-S-014 4.2.1, 4.2.4, 4.2.5, 12.2.1

Initials ECL Date 7/28/92

Well Protection

Verification Method VISUAL OBSERVATION

Criteria WHC-S-014 4.2.10

	Initials	Date
Protective Posts	ECL	12/18/92
Protective Casing	ECL	12/18/92
Site Restored	ECL	12/18/92
Cap, Hasp and Lock	ECL	12/18/92
Surface Pad	ECL	12/18/92

Annular Seal/Filter Pack

5.3.1

Verification Method MEASURING W/STEEL TAPE Criteria WHC-S-014 4.2.6, 4.2.7, 4.2.8, 4.2.9,

Type	Interval	Volume	Initials	Date
SILICA SAND 10-20	297.65 - ~~269.35~~ 265.8 (ECL 07/24/92)	10.7 FT³ (10 sacks)	E.C.L	7/28/92
BENTONITE PELLETS 3/8"	ECL 07/24/92 ~~269.35~~ 261.5 - 265.8	1.24 FT³ (2 buckets)	E.C.L	7/28/92
BENTONITE CRUMBELS (8-20 MESH)	ECL 07/24/92 ~~261.5~~ 11.8 - 11.8	178.2 FT³ (179 sacks)	E.C.L	7/28/92
CEMENT GROUT	11.8 - 2.0	20.6 FT³ (16 sks)	E.C.L.	7/28/92

Well Survey/Labeling

Verification Method REVIEW OF SURVEY REPORT

Criteria WHC-S-014 ~~4.2~~ 3.4 MMS 5/4/92

	Initials	Date
Measurement Point/Surveyed	BAT	1-8-93
Protective Casing/Brass Cap Surveyed	BAT	1-8-93
Well Number Stenciled	ECL	12/18/92
Brass Cap Labeled	ECL	12/18/92

Pump Installation

Verification Method VISUAL OBSERVATION

Criteria WHC-S-014 4.2.11, 4.2.2

	Initials	Date
Pump Decon/Prep	JAC	8/27/92
Installed	JAC	8/27/92
Pump Tested	JAC	8/27/92

Other (initial if performed)

NA Well Abandonment NA Downhole TV Inspection ✓ Complete As-Built Diagram, Driller's/Geologist's Logs

8/27/92 JAC Well Development

Comments/Remarks ① Date SAMPLE ready

A-18

Reviewed By (Sign/Print Name) Kent D Reynolds / Kent D Reynolds Date 1/11/93

9313090.0496

WHC-SD-EN-DP-058, Rev. 0

WELL SUMMARY SHEET

Boring or Well No. 299-E25-45

Sheet 1 of 2

Location 299-E25-45 200 E S of Grout

Project W-012 / Grout Facility

Elevation 675.74'

Drilling Contractor K.E.H. / JENSEN

Driller D. MINGO

Drilling Method and Equipment BACKHOE / ODEX AIR ROTARY

Prepared By G. Thompson / Brett Thompson (Sign/Print Name) Date 9-21-92

Reviewed By EDWARD C. HAYNE Edward C. Hayne (Sign/Print Name) Date 09/22/92

CONSTRUCTION DATA		Depth in Feet	GEOLOGIC/HYDROLOGIC DATA	
Description	Diagram		Graphic Log	Lithologic Description
Cement Grout 2.0'-11.8' bls		0		(0'-10') SANDY SILT
12" Ø CS CASING SET AT 11.61'		5		" " "
		10		(10'-20') GRAVELLY SANDY SILT
10" Ø CS CASING SET AT 172.74'		15		" " " "
		20		(20'-45') SILTY SAND
		25		" " "
		30		" " "
		35		" " "
		40		" " "
		45		(45'-60') GRAVELLY SILTY SAND
		50		" " "
		55		" " "
		60		(60-65) GRAVELLY SANDY SILT
		65		(65-75) GRAVELLY SILTY SAND
		70		" " " "
		75		(75-85) SILTY SAND
		80		" " "
		85		(85' to ~~104.5'~~ 110.0') GRAVELLY SILTY SAND
Bentonite Crumbles (11.8'-~~266.5'~~)		90		" " "
		95		" " "
		100		" " "
		105		" " "
		110		(110-172.5') SILTY SAND
		115		" " "
		120		" " "
		125		" " "
		130		" " "
		135		" " "
		140		" " "
		145		" " "
		150		" " "
		155		" " "

WHC-SD-EN-DP-058, Rev. 0

WELL SUMMARY SHEET

Boring or Well No. 299-E25-45

Sheet 2 of 2

Location 299-E25-45 200-E.S. of Grout
Project W-017 / Grout FACILITY
Elevation 675.74'
Drilling Contractor K.E.H / Jensen
Driller D. MINGO
Drilling Method and Equipment ODEX Air Rotary
Prepared By Brett Thomson (Sign/Print Name) Date 9-21-92
Reviewed By EDWARD C. RAYER Edward C. Rayer (Sign/Print Name) Date 09/22/92

CONSTRUCTION DATA Description	Diagram	Depth in Feet	GEOLOGIC/HYDROLOGIC DATA Graphic Log	Lithologic Description
				SILTY SAND CONTINUED
		165		" " "
10" Ø CS CASING SET		170		" " "
at 172.74		175		(172.5' to 185) PEBBLE SAND
		180		" " "
		185		(185'-195') COBBLE SANDY PEBBLE
		190		" " " "
		195		(195'-~~225~~ 230') SANDY COBBLE PEBBLE
		200		" " "
8" temporary CS Casing		205		" " "
at 297.15'		210		" " "
		215		" " "
BENTONITE CRUMBELS 11.8'-261.5'		220		" " "
BENTONITE PELLETS 261.5-		225		" " "
265.8		230		(230-267) SILTY SANDY PEBBLE
		235		" " "
		240		" " "
		245		" " "
		250		" " "
		255		" " "
TOP OF BENTONITE PELLETS		260		" " "
at 261.5' TOP OF SAND PACK at 265.8'		265		" " "
TOP OF SS SCREEN at 269.35'		270		Silt lenses (267' to 269)
SWL at 272.1 at 7/28/92		275		(269'-295') SILTY SAND
SAND PACK-10-20 265.8-		280		" " "
297.65		285		" " "
Bottom of S.S. SCREEN w/		290		" " "
END CAP at 289.60		295		" " "
BACK FILL w/10-20 SAND 289.60 to				(295'-297.65') SANDY PEBBLE
297.65				
DEPTH OF BOREHOLE =				
297.65'				
		A-20		

9313090.0198

KAISER ENGINEERS HANFORD

SURVEY DATA REPORT

Request No. 9 3 1 0 5 7

Project/W.O. No.: W-017H

Title: Nine Odex CM Wells

File No. 2 9 9 E 2 5

KEH Job No.: CR-9752

Prepared By: RL Hackwith

Date: 12/30/92

Reviewer: V. Coyne

1 2

DESCRIPTION OF WORK	ACCEPTABILITY (Within Plan Tolerance)	DISTRIBUTION	
Horizontal (NAD'83) and vertical (NGVD'29) location of monitoring wells.	Yes ☒	Survey File	OR
	No ☐	Field Project File	1
	NA ☐	P Collier	1
	TBD by Requestor ☐	L Dietz	1
		J Rieger	1
		D Weekes	1

SURVEY RESULTS AND COMMENTS

Control Monuments: Landfill Site

LF-1
N:131,301.762
E:579,339.132

C.P."D"
N:130,947.087
E:579,137.752

NOTE: Horizontal control points used were part of a traverse with a linear closure greater than 1:50,000.

USGS BM MON
163
EL. 514.864

WELL #	COORDINATES ℄ CASING PLANT	LAMBERT WCS83S. (mtrs)	ELEVATION (feet) NGVD 29 BRASS CAP	HYDROSTAR	TOP OF CASING
199-N-77	100N N: 5521.9 W: 5819.8	N: 149,243.21 E: 571,309.93	455.75	459.45	459.44
699-25-34B	200E N: 25,782.6 W: 33,716.8	N: 131,352.50 E: 579,629.52	526.47	530.29	530.27
699-25-34D	200E N: 25,253.6 W: 33,847.9	N:131,191.16 E:579,589.97	534.47	537.92	537.91

Control Monuments: 100N

100N-1
N: 148,992.908
E: 571,387.337

100N-2
N: 149,544.403
E: 571,811.368

S-324
USC&GS
EL.=466.462

NOTE: Horizontal Control points used were part of a traverse with a linear closure greater than 1:48,000.

9313090.0199

12/30/92 931-057-299-E25

KAISER ENGINEERS
HANFORD

FIELD SKETCH

Attachment To Or Description:
Nine Odex CM Wells - Continued

Sheet 2 of 2

Control Monuments: Grout

SL-2	SL-3	BM MON.
N:135,705.555	N:135,916.127	2E-18
E:575,938.675	E:575,938,323	EL=678.331

Horizontal Control Monuments used to locate wells were part of a traverse with a linear closure greater than 1:50,000. Vertical control monuments used was based on 5.8 mile loop with a closure of .024 ft.

WELL #	COORDINATES ℄ CASING		ELEVATION (feet)		
	PLANT	LAMBERT WCS83S (mtrs)	BRASS CAP	HYDROSTAR	TOP OF CASING
299-E25-45	200E N: 39,939.7 W: 44,973.2	N: 135,659.15 E: 576,185.55	675.74	678.46	678.45
299-E25-47	200E N: 40,835.3 W: 46,306.1	N: 135,930.98 E: 575,778.55	670.41	673.78	673.77
299-E25-48	200E N: 40,456.8 W: 46,816.1	N: 135,815.16 E: 575,623.43	679.68	682.32	682.31
299-W27-2	200W N: 33,494.3 W: 75,430.7	N: 133,670.63 E: 566,908.55	674.10	677.13	677.11
699-41-42	200E N: 41,270.3 W: 41,898.1	N: 136,068.17 E: 577,122.21	640.32	643.92	643.91
699-44-39B	200E N: 43,426.3 W: 39,140.4	N: 136,727.61 E: 577,960.80	509.62	513.41	513.40

Control Monuments: 200W

RAG	FLAG	BM B.C. MONS.
N:133,758.279	N:133,900.567	299-W26-11
E:567,152.333	E:566,321.472	299-W26-12

Vertical control points used were based on a 3.3 mile level run with a closure of -0.037 ft.

9313090.0500

BOREHOLE LOG

VALIDATED 1989
KDR 11/30/92
SIGNATURE/DATE

Boring or Well No. 299-E25-45

Sheet 1 of 18

Location 200 E - South of Grout
Project W-017 / ~~LL-B~~ GTF
Elevation 675.74'
Drilling Contractor KEH/JENSEN
Driller Dennis Mogo
Drilling Method and Equipment BACKHOE/ODEX
Prepared By Brett Thompson / Brett Thompson (Sign/Print Name) Date 6/19/92
Reviewed By Edward C. Rafuse / Edward C. Rafuse (Sign/Print Name) Nancy Ballantyne/NB Date 06/26/92

Depth (5')	Sample Type and No.	Sample Blows or Recovery	Graphic Log	Sample Description: Soil Classification, Particle Size Distribution, Color, Moisture Content, Sorting, Angularity, Mineralogy, Reaction to HCl.	Comments: Depth of Casing, Drilling Rate, Casing Size & Type, Bit Size, Water Level
	1 Rad 2 Lith 1 CaCO3 H20	BH (Backhoe)		5' SANDY SILT (0'-10')	Palouse Soil
				95% Sand 5% Silt	Sample was not
				V.F.S 80%	rinsed, viewed through
				M.S. 20%	a plastic bag.
				Color Wet 10YR 5/3	
				Dry 10YR 6/2	Back Hoe
				moist, well sorted, Angular to Sub-	
				angular, Mineralogy of Sand: 90%	
				feldspar 10% qtz moderate	
10'				reaction to HCL	
	1 Rad 2 Lith 1 CaCO3 H20	BH (Backhoe)		GRAVELLY SANDY SILT 10'	Sample viewed through
				3% Gravel 97% Sandy Silt	a plastic Bag.
				3% fp 50% c.s.	Note: Course sand color
				45% f.s.	is 2.5YR Dry Same
				5% Silt	as fine pebble. more
				Color: palouse same as last observation except for the pebbles 2.5YR Dry	angular than the pebbles.
				Dark grey, well sorted subrounded	The course sand is also
				to angular Mineralogy: 50% feldspar	90% Basalt.
				10% Qtz 40% Basalt. moderate reaction to HCL	Back Hoe install casing 11.16' of 12"
15'	1 HPT 2 Lith 1 CaCO3+ H20	ODEX Air Rotary		Gravelly Sandy Silt	15' at 1201 6/17/92
				5% Gravel 40% Sand 55% Silt	
				100% f.p 10% c.s 100% Silt	Note casing advances
				15% m.s	with Drill Bit.
				75% f.s	Drill rate is ≈ 5ft/4min
				Color Wet 5Y 3/2 Dark olive grey	10" CS Casing
				Dry 2.5Y 5/2 gry brn moderate to	10" Bit
				Poor Sorting Angular to Subrounded.	water level N/A.
				Mineralogy 30% Qtz, 50% feldspar 20%	
20'				Basalt vigorous reaction to HCL	
	1 HPT 2 Lith 1 CaCO3+ H20	ODEX Air Rotary		Silty Sand (20'-45') 9-21-92	20' at 1205 6/18/92
				30% Silt 70% Sand	
				100% Silt CS. 55%	
				MS. 30%	
				F.S. 15%	
				Color Dry 2.5Y 5/2 gry Brn	
				wet 5Y 2.5/2 Black	
				moderate to well sorted, Angular to	
				subround Mineralogy 15% Qtz 35%	
				feldspar 55% Basalt Light Reaction HCL	

A-6000-382 (04/90)

9313090.0501

BOREHOLE LOG

Boring or Well No. 299-E25-45

Sheet 2 of 18

Location 200 E - South of Grout
Project W017 / LL B 6/23/92 GTF
Elevation 675.74'
Drilling Contractor KEH / JENSEN
Driller D.E. Miya
Drilling Method and Equipment ODEX
Prepared By Brett Thompson (Sign/Print Name) Date 6/19/92
Reviewed By Edward C. Rafuse (Sign/Print Name) Date 06/26/92

Depth (25')	Sample Type and No.	Sample Blows or Recovery	Graphic Log	Sample Description: Soil Classification, Particle Size Distribution, Color, Moisture Content, Sorting, Angularity, Mineralogy, Reaction to HCl. BRT 6-25-92	Comments: Depth of Casing, Drilling Rate, Casing Size & Type, Bit Size, Water Level
	1 HPT 2 Lith 1 CaCo3 + H20	ODex Air Rotary		Silty Sand 20'-~~45~~ 40 Description. No change in lithology 20'-~~45~~ 40' feet. BRT 6-25-92	25' at 1333 6/18/92 Casing advances with Drill. Drill rate is ~~5ft~~ 5ft every 4 minutes 10" casing 10" Air Rotary Bit water level not Applicable.
30'	1 HPT 2 lith 1 CaCo3 + H20	ODex Air Rotary		Silty Sand Same as 20' Description. Same as last observation	30' at 1339 6/18/92. Casing advances with Drill Drill rate is 5ft every 4 minutes Depending material Drilling Through 10" casing 10" Air Rotary Bit water level not Applicable.
35'	1 HPT 2 Lith 1 CaCo3 + H20	ODex Air Rotary		Silty Sand Same as 20' Description. Same as last observation	35' at 1352 6/18/92 Casing advances with Drill Drill rate=5ft/13min. 10" CS casing 10" Bit water level NA
40'	1 HPT 2 Lith 1 CaCo3 + H20	ODex Air Rotary		Silty Sand Same as 20' Description. Same as last observation	40' at 1356 6/18/92 Casing advances with Drill Drill rate = 5ft/4min 10" CS casing 10" Bit water level not Applicable

A-6000-382 (04/90)

9313090.0502

BOREHOLE LOG

Boring or Well No. 299-E25-45

Sheet 3 of 18

Location 200 E - South of Grout
Project WOLF/~~LLBG~~ GTF
Elevation 675.74
Drilling Contractor KEH / JENSEN
Driller D. E. Mingo
Drilling Method and Equipment ODEX
Prepared By Brett Thompson (Sign/Print Name) Date 6/19/92
Reviewed By Edward C. Rafuse (Sign/Print Name) Date 06/26/92

Depth (45')	Sample Type and No.	Sample Blows or Recovery	Graphic Log	Sample Description: Soil Classification, Particle Size Distribution, Color, Moisture Content, Sorting, Angularity, Mineralogy, Reaction to HCl.	Comments: Depth of Casing, Drilling Rate, Casing Size & Type, Bit Size, Water Level
	1 HPT 2 Lith 1 Calcst H2O	ODex Air Rotary		Gravelly Silty Sand (45'-60') 2% Gravel 5% Silt 93% Sand 100% f.p. 100% Silt 25% C.S 65% m.S 10% F.S Color Dry-2.5y 5/3 lite olive Brown wet-5y 3/2 Dark olive Grey Moderate to Well Sorted, Angular to Subround Mineralogy: 25% Qtz 25% Basalt 25% undiff volcanics. lite to moderate reaction to HCL	45' at 1450 6-18-92
50'	1 HPT 2 Lith 1 Calcst H2O	ODex Air Rotary		Gravelly Silty Sand see 45' Description no change in lithology 45' to 60'.	50' at 1500 6/18/92 Casing Advances with Drill Drill rate 5'/10 min. 10" CS Casing 10" Bit water level N/A
55'	1 HPT 2 Lith 1 Calcst H2O	ODex Air Rotary		Gravelly Silty Sand see 45' Description. Same as last observation.	55' at 1509 6/18/92 Casing Advances with Drill Drill rate 5ft/9 min 10" CS Casing 10" Bit water level N/A.
60'	1 HPT 2 Lith 1 Calcst H2O	ODex Air Rotary		Gravelly Sandy Silt (60 to 65) 1% Gravel 49% Sand 50% Silt 100% f.p. CS 10% 100% Silt ms 20% fs 70% Color wet 5y 3/2 Drk. olive grey Dry 2.5y 5/4 lt. olive Brown moderate to poor Sorting Angular to Subangular Mineralogy 25% Qtz 25% Feldspar 30% Basalt 20% undiff volc. Strong reaction to HCL	60' at 1512 6/18/92 Casing Advances with Drill Drill rate 5ft/3 min 10" CS Casing 10" Bit water level N/A

A-6000-382 (04/90)

9313090.0503

BOREHOLE LOG

Boring or Well No. 299-E25-45

Sheet 4 of 18

Location 200 E - South of Grout

Project WO17/LLBG-NB 9/01/92 GTF

Elevation 675.74

Drilling Contractor KEH/JENSEN

Driller D.E. Mingo

Drilling Method and Equipment ODEX Air Rotary

Prepared By Brett Thompson (Sign/Print Name) Date 6/19/92

Reviewed By Edward C. Rafuse (Sign/Print Name) Date 06/26/92

Depth (65')	Sample Type and No.	Sample Blows or Recovery	Graphic Log	Sample Description: Soil Classification, Particle Size Distribution, Color, Moisture Content, Sorting, Angularity, Mineralogy, Reaction to HCl.	Comments: Depth of Casing, Drilling Rate, Casing Size & Type, Bit Size, Water Level
	1 HPT 2 Lith. 1 CaCO3+ H20	ODex Air Rotary		Gravelly Silty Sand (65' to 75')	65' at 1629 6/18/92
				12% Gravel 10% Silt 89% Sand	Casing Advances with Drill
				100% F.G 100% silt 10% CS	Drill rate ~~5'/3 min~~ N/A
				75% MS	10" CS Casing 10" Drill Bit
				15% FS	water level = N/A.
				Color Dry 2.5Y 5/2 grey Brown	
				wet 5Y 3/2 Dk olive grey	
				moderate sorting Angular to Subround	
				Mineralogy 25% qtz 25% feldspar 30%	
70'				Basalt 20% undiff. volc. moderate reaction to HCL	
	1 HPT 2 Lith 1 CaCO3+ H20	ODex Air Rotary		Gravelly Silty Sand see 65'	70' at 1632 6/18/92
				description. No Change in lithology	
				65' to 75'.	Casing Advances with Drill
					Drill rate ~~5ft/9min~~ 5ft/3min
					10" CS Casing 10" Drill Bit
					water level = N/A.
75'					
	1 HPT 2 Lith 1 CaCO3+ H20	ODex Air Rotary		Silty Sand (75' to 85')	75' at 1641 6/18/92
				40% silt 60% Sand	
				100% silt CS 2.0%	Casing advances with
				M.S 25%	Drill.
				F.S 73%	Drill rate 5'ft/9 min
				Color wet 5Y 4/2 olv. grey	10" cs Casing 10" Drill bit
				Dry 2.5Y 5/3 lt. olive Brown	water level = N/A
				well to moderate Sorting Angular to Subangular	
				Mineralogy 25% qtz 25% feldspar 25%	
80'				Basalt 25% undiff volc. moderate reaction to HCL	
	1 HPT 2 Lith 1 CaCO3+ H20	ODex Air Rotary		Silty Sand see 75' description	80' at 1647 6/18/92
				No Change in lithology 75' to 85'.	
					Casing advances with
					Drill
					Drill rate 5ft/6 min
					10" cs Casing 10" Drill Bit
					water level = N/A

9313090.0504

BOREHOLE LOG

Boring or Well No. 299-E25-45

Sheet 5 of 18

Location 200 E- S of Grout

Project WOLF / ~~LLBG~~ 6/25/92 GTF

Elevation 675.74

Drilling Contractor KEH / JENSEN

Driller D.E. Mingo

Drilling Method and Equipment O.D.E.X

Prepared By Brett Thompson / Brett Thompson (Sign/Print Name) Date 6-22-92

Reviewed By Edward C. Rafuse / Edward C. Rafuse (Sign/Print Name) Date 06/26/92

Depth (85')	Sample Type and No.	Sample Blows or Recovery	Graphic Log	Sample Description: Soil Classification, Particle Size Distribution, Color, Moisture Content, Sorting, Angularity, Mineralogy, Reaction to HCl.	Comments: Depth of Casing, Drilling Rate, Casing Size & Type, Bit Size, Water Level
	1 HPT 2 Lith 1 $CaCO_3$ + H_2O	ODEX Air Rotary		Gravelly Silty Sand (85' - ~~100'~~ 118.0')	85' at 0755 6/22/92
				1% Gravel 15% Silt 84% Sand	
				100% f.p 100 Silt 20% C.S	occasional muscovite
				60% M.S	flakes are present.
				20% F.S	
				Color wet 2.5Y 6/4 lt. yellow/Brown	" "
				Dry 5Y 3/2 Dk. olive grey	Drill rate 5ft/~5min
				Well sorted Angular to Sub round	" "
				Mineralogy 25% qtz 10% feldspar 30%	" "
90'				Basalt 35% undiff. volcanics, moderate	
	1 HPT 2 Lith 1 $CaCO_3$ + H_2O	ODEX Air Rotary		reaction to HCL.	
				Gravelly Silty Sand.	90' at 0808 6/22/92
				90' No Change in lithology.	
					" "
					Drill rate = 5ft/3min
					" "
					" "
95'					
	1 HPT 2 Lith 1 $CaCO_3$ + H_2O	ODEX Air Rotary		95' No Change in lithology.	95' at 0810 6/22/92
				Gravelly Silty Sand.	
					" "
					Drill rate 5ft/2min
					" "
					" "
100'					100' at 0821 6/22/92
	1 HPT 2 Lith 1 $CaCO_3$ + H_2O	ODEX Air Rotary		100' No change in lithology	" "
				Gravelly Silty Sand. See sheet	Drill rate 5ft 11 min
				15 of This bore hole log.	" "
				split spoon 103' to 105'	split tube shows
					excelent sorting and
				Alternating silt Sand 1/4" couples 0.5"	sharp gradation.
		Split Spoon see p. 15		Thick	split tube at 1400.
				Well sorted Course Sand	6/29/92
				Silt lense 1/4" Thick	
				Medium pebble in a Sand matrix	

BOREHOLE LOG

Boring or Well No. 299-E25-45

Sheet 6 of 18

Location 200E South of Grout

Project W017/LLBG 9/22/92 GTF

Elevation 675.74'

Drilling Contractor KEH/JENSEN

Driller D.E. MINGO

Drilling Method and Equipment ODEX

Prepared By Brett Thompson/Brett Thompson (Sign/Print Name) Date 6/19/92

Reviewed By Edward C. Lynn (Sign/Print Name) Date 10/26/92

Depth (105')	Sample Type and No.	Sample Blows or Recovery	Graphic Log	Sample Description: Soil Classification, Particle Size Distribution, Color, Moisture Content, Sorting, Angularity, Mineralogy, Reaction to HCl.	Comments: Depth of Casing, Drilling Rate, Casing Size & Type, Bit Size, Water Level
	1HPT 2Lith 1 CaCo3+ H20	split spoon		Gravelly Silty Sand	105' at 1400 6/22/92
				18 Gravel 10% silt 89% Sand	
				100% M.p 100% silt C.S 15%	split tube sample.
				M.S 20%	
				F.S 65%	
				color Dry 2.5y 6/3 yellow brown	
				wet 5y 4/2 olive grey	
				moderate sorting subrnind to subangular	
				Mineralogy: 30% otz 15% feldspar 15% Basalt	
				40% undiff volcanic + meta. moderate HCL	
110'	1HPT 2Lith 1 CaCo3+ H20	ODEX Air Rotary		Silty Sand (110 - ~~115~~ 122.5) BOS 9/21/92	110' at 0752 6/23/92
				15% silt 85% Sand	
				100% silt C.S 10%	
				M.S 60%	
				F.S 30%	
				color wet 5y 4/2 olive grey	
				Dry 2.5y 5/3 lt. olive Brown	
				well sorted subangular to Angular	
				Mineralogy: 50% otz 5 feldspar 10%	
				Basalt 35% undiff volc metamorphics	
115'	1HPT 2Lith 1 CaCo3+ H20	ODEX Air Rotary		lite to no reaction to HCL	115' at 0753 6/23/92
				Silty Sand same as the last	" "
				observation.	Drill rate 5'ft/1min
					" "
					" "
120'	1HPT 2Lith 1 CaCo3+ H20	ODEX Air Rotary		BOS 6/25/92 Silty Sand (120 - ~~130~~')	120' at 0758 6/23/92
				20% Silt 80% Sand 130'	
				100% silt M.S 80%	" "
				F.S 20%	Drill rate 5ft/5min
				color: wet 5y 4/2 olive grey	" "
				Dry 2.5y 4/3 olive Brown	" "
				well sorted Subangular Mineralogy:	
				otz 30% Basalt 15% undiff volc and	
				metamorphics 50% feldspar 5%	
				lite to vigorous reaction to HCL.	

A-6000-382 (04/90)

9313090.0506

BOREHOLE LOG

Boring or Well No. 299-E25-95

Sheet 7 of 18

Location 200 E South of Grout

Project W017 / ~~LLBG~~ 10 GTF 7/28/92

Elevation 675.74'

Drilling Contractor KEH / JENSEN

Driller D.E. MENSO

Drilling Method and Equipment ODEX

Prepared By Brett Thompson / Brett Thompson (Sign/Print Name) Date 6/23/92

Reviewed By Edward C. Rafuse / Edward C. Rafuse (Sign/Print Name) Date 06/29/92

Depth (125')	Sample Type and No.	Sample Blows or Recovery	Graphic Log	Sample Description (Soil Classification, Particle Size Distribution, Color, Moisture Content, Sorting, Angularity, Mineralogy, Reaction to HCl.)	Comments (Depth of Casing, Drilling Rate, Casing Size & Type, Bit Size, Water Level)
	1 HPT 2 Lith 1 CaCO3 H20	ODex Air Rotary		Silty Sand Same as the last observation. see 120' Description	125' at 0905 6/23/92
					" "
					Drill rate 5ft/1min
					" "
					" "
130'	1 HPT 2 Lith 1 CaCO3 H20	ODex Air Rotary		Silty Sand (130' to ~~140'~~ 145') MT 6/25/92	130 at 0906 6/23/92
				15% silt 85% Sand	
				100% silt C.S=15%	" "
				M.S=70%	Drill rate 5ft/1min
				f.S=15%	" "
				Color wet 5Y 4/3 olive	" "
				Dry 2.5Y 6/4 lt yellow Brown	
				moderate to well sorted Subangular to	
				Angular Mineralogy 60% Otz 5%	
135'				Basalt 35% andite volc-Metamorphics	
	1 HPT 2 Lith 1 CaCO3 H20	ODex Air Rotary		Vigorouse reaction to HCL.	135 at 0910 6/23/92
				Silty Sand Same as the last	" "
				observation.	Drill rate 5ft/4min
					" "
					" "
140'	1 HPT 2 Lith 1 CaCO3 H20	ODex Air Rotary		Silty Sand Same as the last	140' at 0914 6/23/92
				observation. see 130'	" "
				Description.	Drill rate = 5ft/4min
					" "
					" "

A-6000-382 (04/90)

9313090.0507

BOREHOLE LOG

Boring or Well No. 299-E25-45

Sheet 8 of 18

Location 200 E - South of Grout

Project W012 / ~~LLBG~~ 9/23/92 GTF

Elevation 674.74

Drilling Contractor KEH / JENSEN

Driller D.E. Mingo

Drilling Method and Equipment ODEX

Prepared By Brett Thompson (Sign/Print Name) Date 6/19/92

Reviewed By Edward C. Rafuse (Sign/Print Name) Date 6/26/92

Depth (145')	Sample Type and No.	Sample Blows or Recovery	Graphic Log	Sample Description: Soil Classification, Particle Size Distribution, Color, Moisture Content, Sorting, Angularity, Mineralogy, Reaction to HCl.	Comments: Depth of Casing, Drilling Rate, Casing Size & Type, Bit Size, Water Level
	1 HPT 2 Lith 1 CaCO3 + H2O	ODex Air Rotary		Silty Sand (145' - ~~160'~~ 160')	145 at 1242, 6/23/92
				15% silt 85% Sand	
				100% silt 10% C.S	
				45% M.S	
				45% F.S	
				Color wet 5Y 5/2 olive grey	
				Dry 2.5Y 6/3 lite yellowish	
				Brown. well to moderate sorting	
				mostly subangular to angular	
				mineralogy: 40% qtz 5% Basalt	
150'	1 HPT 2 Lith 1 CaCO3 + H2O	ODex Air Rotary		55% undiff. volcanic metamorphics	150' at 1245, 6/23/92
				Vigorous reaction to HCL	
				Silty Sand Same as the	" "
				last observation.	Drill rate 5 ft/3 min
					" "
					" "
155'	1 HPT 2 Lith 1 CaCO3 + H2O	ODex Air Rotary		Silty Sand Same as the	155 at 1256, 6/23/92
				last observation see 145'	
				Description.	" "
					Drill rate 5 ft/2 min
					" "
					" "
160'	1 HPT 2 Lith 1 CaCO3 + H2O	ODex Air Rotary		Silty Sand (160' - 170')	
				20% Silt 80% Sand	160 at 1257, 6/23/92.
				100% Silt 20% M.S	add in ~~Sand Descript~~
				80% F.S	~~Jones~~ 6.22 as/ey/92
				Color wet 2.5Y 5/2 lite yellowish Brown	" "
				Dry 2.5Y 7/3 pale yellow	Drill rate 5 ft/1 min
				well sorted Subangular to Angular	" "
				Mineralogy 92% qtz 3% Basalt 5%	" "
				undiff volc. Metamorphics lite to moderate	
				reaction to HCL.	

A-30

A-6000-382 (04/90)

9313090.0508

BOREHOLE LOG

Boring or Well No. 299-E25-45

Sheet 9 of 18

Location 200 E - South of Grout
Project WOLF / ~~LLBG~~ GTF
Elevation 675.74
Drilling Contractor KEH / JENSEN
Driller Dennis Mingo
Drilling Method and Equipment ODEX
Prepared By Brett Thompson / Brett Thompson (Sign/Print Name) Date 6/24/92
Reviewed By Edward C. Rafuse / Edward C. Rafuse (Sign/Print Name) Date 06/26/92

Depth (165')	Sample Type and No.	Sample Blows or Recovery	Graphic Log	Sample Description: Soil Classification, Particle Size Distribution, Color, Moisture Content, Sorting, Angularity, Mineralogy, Reaction to HCl.	Comments: Depth of Casing, Drilling Rate, Casing Size & Type, Bit Size, Water Level
	1 HPT 2 Lith 1 CaCO3 + H2O	ODEX Air Rotary		Silty Sand same as 160' interval. No change in lithology	165' at 1422 6/29/92
				Split 172'-174' see page 16 of This bore hole log.	
170'	1 HPT 2 Lith 1 CaCO3 + H2O	ODEX Air Rotary		Silty Sand	170' at 1430 6/23/92
				5% silt 95% Sand	split tube at 0732-0734
				100% silt 40% C.S	6/24/92 (173'-174')
				20% M.S	172' 75% M.S 15% C.S
		split Spoon *see p.17		40% F.S	172' ~~C.S~~ and F.p 10%
				Color wet 5/y 6/3 pale olive	173' 60% C.S and 40% F.p
				Dry 2.5y 6/3 lt. yellowish Brown	173.5' - 174.0' 30% C.p 40%
				moderate sorting Subangular to	M.p 20% F.p and 10% C.S
				Angular Mineralogy 70% qtz 15%	Gradational Contact
175'				Basalt 15% undiff volc & metamorphics No	~~172 ft 10" CS Casing Set~~
	1 HPT 2 Lith 1 CaCO3 + H2O	ODEX Air Rotary		effect from HCL.	10" CS casing set at 171 ft.
				~~Pebbly~~ Pebble Sand (175'-180')	175' at 1616 6-24-92
				40% F.p 60% V.C.S (172.5-185')	(Note) crushed Pebble.
				Color Dry 2.5y 4N4/ Dark grey	Very Clean fine pebble
				wet 5y 2.5/1 Black	+ Very Course sand. well
				well sorted Subround to Subangular	Sorted.
				mineralogy 5% qtz 80% Basalt 15%	Casing advances with
				undiff. volcanics. No Reaction to	Drill. 8" CS Casing 8"
				HCL	Drill Bit. water level NA
180'	1 HPT 2 Lith 1 CaCO3 + H2O	ODEX Air Rotary		Pebble Sand Same as the last observation.	180' at 1626 6/24/92
					Casing advances with Drill.
					Drill rate = 5'/10 min
					8" CS Casing 8" Drill Bit
					water level =

A-6000-382 (04/90)

9313090.0509

BOREHOLE LOG

Boring or Well No. 299-E25-45

Sheet 9/10 of 18

Location: 200 E South of Grout
Project: W017 / ~~LLBG~~ GTF
Elevation: 675.74
Drilling Contractor: KEH / JENSEN
Driller: DENNIS MINBO
Drilling Method and Equipment: ODEX
Prepared By: [illegible] / Brett Thompson (Sign/Print Name) Date: 6/26/92
Reviewed By: Edward C. Rafuse (Sign/Print Name) Date: 06/26/92

Depth (185')	Sample Type and No.	Sample Blows or Recovery	Graphic Log	Sample Description: Soil Classification, Particle Size Distribution, Color, Moisture Content, Sorting, Angularity, Mineralogy, Reaction to HCl.	Comments: Depth of Casing, Drilling Rate, Casing Size & Type, Bit Size, Water Level
	1 HPT 2 Lith 1 CaCO3 + H2O	ODEX Air Rotary		Cobble Sandy Pebble (185-195)	185' at 1109 6/25/92
				10% cobble 30% Sand 60% Pebble	
				100% S.C 80% C.S 20% m.p	
				20% m.s 80% f.p	Casing advances with Drill.
				color wet 2.5y N2/ Black	Drill rate 5ft/9 min
				Dry 2.5y N3/ very Dark grey	8" cs casing 8" Drill Bit
				moderate to poor Sorting, Subround	water level = N/A.
				to Angular. Mineralogy 20% qtz	
				40% Basalt 40% undift volcanics	
190'				NO Reaction to HCL	
	1 HPT 2 Lith 1 CaCO3 + H2O	ODEX Air Rotary		Cobble Sandy Pebble	190' at 1117 6/25/92
				No change in lithology. See	
				185' for Description. Same as	
				the last observation	" "
					Drill rate 5ft/8 min
					" "
					" "
195'					
	1 HPT 2 Lith 1 CaCO3 + H2O	ODEX Air Rotary		Sandy Cobble Pebble (195-~~225~~ 230)	195 at 1129' 6/25/92
				15% Sand 20% Cobble 65% Pebble	Note cobbles and pebbles
				80% C.S 100% cobble 60% f.p	are shattered from Drill.
				20% m.s 40% C.p	" "
				Color wet 2.5y N2/ Black	Drill rate = 5ft/9 min
				Dry 2.5y N3/ very Dark grey	" "
				moderate to poor Sorting, Subround to	" "
				Angular. Mineralogy 20% qtz	Interpitation based on the
				40% undift volcanics 40% Basalt	rounded edges and there
200'				NO Reaction to HCL	are.
	1 HPT 2 Lith 1 CaCO3 + H2O	ODEX Air Rotary		Sandy Cobble Pebble	200' at 1153 6/25/92
				Same lithology as the last	
				observation.	
					" "
					Drill rate = 5ft/24 min
					" "
					" "

9313090.0510

BOREHOLE LOG

Boring or Well No. 299-E25-45

Sheet 11 of 18

Location 200 E - South of grout

Project WA 17 / ~~LL BOILER~~ GTF

Elevation 675.74

Drilling Contractor KEH / JENSEN

Driller Dennis Mingo

Drilling Method and Equipment ODEX

Prepared By Brett Thompson / Brett Thompson (Sign/Print Name) Date 6/25/92

Reviewed By Edward C. Rafuse / Edward C. Rafuse (Sign/Print Name) Date 06/26/92

Depth (205')	Sample Type and No.	Sample Blows or Recovery	Graphic Log	Sample Description: Soil Classification, Particle Size Distribution, Color, Moisture Content, Sorting, Angularity, Mineralogy, Reaction to HCl.	Comments: Depth of Casing, Drilling Rate, Casing Size & Type, Bit Size, Water Level
	1 HPT 2 Lith 1 Calcst H20	ODEX Air Rotary		Sandy Cobble Pebble No Change in lithology. See 195' for description.	205' at 1339 6/25/92 Casing advances with Drill Drill rate 5ft/8min 8" casing; 8" Drill Bit water level = N/A
210'	1 HPT 2 Lith 1 Calcst H20	ODEX Air Rotary		Sandy Cobble Pebble No change in lithology. See 195' for description.	210' at 1351 6/25/92 " " 5ft/12 min Drill rate ~~not Available~~ 6-26-92 " " " "
215'	1 HPT 2 Lith 1 Calcs. H20	ODEX Air Rotary		Sandy Cobble Pebble No Change in lithology. See 195' for Sample description	215' at 1423 6/25/92 " " Drill rate not Available " " " "
220'	1 HPT 2 Lith 1 Calcst H20	ODEX Air Rotary		Sandy Cobble Pebble No Change in lithology. See 195' for Sample description.	220 at 1433 6/25/92 " " Drill rate 5ft/10 min " " " "

9313090.0511

BOREHOLE LOG

Boring or Well No. 299-E25-45

Sheet 12 of 18

Location 200 E South of grout

Project WOLF / ~~ELBG~~ 6/25/92 GIF

Elevation 675.74

Drilling Contractor KEH / JENSEN

Driller Dennis Miago

Drilling Method and Equipment ODEX

Prepared By Brett Thompson (Sign/Print Name) Date 6/26/92

Reviewed By Edward C. Rafoe (Sign/Print Name) Date 06/30/92

Depth (225')	Sample Type and No.	Sample Blows or Recovery	Graphic Log	Sample Description: Soil Classification, Particle Size Distribution, Color, Moisture Content, Sorting, Angularity, Mineralogy, Reaction to HCl.	Comments: Depth of Casing, Drilling Rate, Casing Size & Type, Bit Size, Water Level
	1 HPT 2 Lith 1 CaCo3 + H2O	ODex Air Rotary		Sandy Cobble Pebble	225' at 1525 6/25/92
				No Change in lithology. See	
				195' for Sample description	
					Casing Advances with
					Drill. Drill rate not
					available. Drill noted
					Drilling hard.
					8" CS Casing 8" Drill Bit
					water level NA.
230'	1 HPT 2 Lith 1 CaCo3 + H2O	ODex Air Rotary		Silty Sandy Pebble (230'-267')	230' at 1545 6/25/92
				5% silt 35% Sand 60% Pebble	" "
				100% Silt 40% C.S 10% F.P	Drill rate ≈ 5ft/20min
				30% M.S 60% crushed pebble	" "
				30% F.S	" "
				Color wet 5Y 5/2 olive grey	
				Dry 2.5Y 6/2 light Brownish grey	
				Poor Sorted Subround to Subangular	
				Mineralogy 40% qtz 20% Basalt 40% undifferiate	
235'				No reaction to HCL	
	1 HPT 2 Lith 1 CaCo3 + H2O	ODex Air Rotary		Silty Pebble Sand	235' at 1559 6/25/92
				15% silt 30% Pebble 55% Sand	" "
				100% silt 10% F.P 10% C.S	Drill rate ≈ 5ft/14min
				90% Crushed pebble 85% M.S	" "
				75% F.S	" "
				Moderate to poor Sorting Subround to	glassy silica glass
				Angular Color wet 5Y 3/2 Dark grey	present with mica flakes
				Dry 2.5Y 5/2 grey Brown	like a ash Horizon.
				Mineralogy 25% qtz 15% Basalt 59%	
240'				undifferiate 1% mica No reaction to HCL.	
	1 HPT 2 Lith 1 CaCo3 + H2O	ODex Air Rotary		Silty Pebble Sand	240' at 1620 6/25/92
				5% silt 35% pebble 60% Sand	" "
				100% silt 15% F.P 80% C.S	Drill rate ≈ 5ft/20min
				85% crushed pebble 5% M.S	" "
				15% F.S	" "
				Color wet 5Y 4/1 Dark grey	
				Dry 2.5Y 5/2 grey Brown	Transition Back in to
				Poor Sorting Subangular to Subround	Pebble
				Mineralogy 25% qtz 20% Basalt 55%	
				undifferiate. No reaction to HCL	

A-6000-382 (04/90)

9313090.0512

BOREHOLE LOG

Boring or Well No. 299-E25-75

Sheet 12 of 18

Location: 200E South of Grout

Project: WOLF / ~~LLBG~~ 9/23/92 GTF

Elevation: 675.74

Drilling Contractor: KEH/JENSEN

Driller: Dennis Mingo

Drilling Method and Equipment: ODEX

Prepared By: [illegible] / Brett Thompson (Sign/Print Name) Date: 6/29/92

Reviewed By: Edward C. Rafuse (Sign/Print Name) Date: 06/30/92

Depth (245')	Sample Type and No.	Sample Blows or Recovery	Graphic Log	Sample Description: Soil Classification, Particle Size Distribution, Color, Moisture Content, Sorting, Angularity, Mineralogy, Reaction to HCl.	Comments: Depth of Casing, Drilling Rate, Casing Size & Type, Bit Size, Water Level
	1 HPT 2 Lith 1 CaCO3 + H2O	ODex Air-Rotary		Silty Sandy Pebble (245'-267')	245' at 0824 6/29/92
				5% Silt 25% Sand 70% Pebble	open frame work
				100% Silt 70% V.C.S. 20% F.P.	gravel/S.
				20% M.S 80% Crushed Pebble	Casing advances with the
				10% F.S	Drill. Drill rate 5ft/11min
				color wet 5Y 4/1 Dark grey	8" CS Casing 8" Drill Bit
				Dry 2.5Y 5/2 grey Brown.	water level N.A.
				moderate to well sorted, Angular to Subround	
				Mineralogy 25% Qtz 25% Basalt 50%	
				undif. volcanics extremily light reaction	
250'	1 HPT 2 Lith 1 CaCO3 + H2O	ODex Air Rotary		to HCL	250' at 0835 6/29/92
				Silty Sandy Pebble	
				Same as last observation NO	" "
				change in lithology	Drill rate 5ft/11 minutes
					" "
					" "
					Powder from Drilling.
					Crushed Pebble from
					Drilling.
255'	1 HPT 2 Lith 1 CaCO3 + H2O	ODex Air Rotary		Silty Sandy Pebble	255' at 0849 6/29/92
				Same as last observation no change	
				in lithology	
					" "
					Drill rate 5ft/14 minutes
					" "
					" "
260'	1 HPT 2 Lith 1 CaCO3 + H2O	ODex Air Rotary		Silty Sandy Pebble	260' at 1043 6/29/92
				No change in lithology (245'-267')	
				See 245' for description	
					" "

9313090.0513

BOREHOLE LOG

Boring or Well No. 299-E25-45

Sheet ~~13~~ 14 of 18

Location 200 E South of Grout

Project W017 / ~~TLB~~ 9/18/92 GTF

Elevation 625.74

Drilling Contractor KEH / JENSEN

Driller Dennis Mingo

Drilling Method and Equipment ODEX

Prepared By ~~Brett Thompson~~ Brett Thompson (Sign/Print Name) Date 6/29/92

Reviewed By ~~Edward C. Rafuse~~ EDWARD C. Rafuse (Sign/Print Name) Date 06/30/92

Depth (265')	Sample Type and No.	Sample Blows or Recovery	Graphic Log	Sample Description: Soil Classification, Particle Size Distribution, Color, Moisture Content, Sorting, Angularity, Mineralogy, Reaction to HCl.	Comments: Depth of Casing, Drilling Rate, Casing Size & Type, Bit Size, Water Level
	1 HPT 2 Lith 1 CaCO3 + H2O	ODEX Air Rotary		Silty Sandy Pebble	265' at 1124 6-29-92
				No change in lithology See 245' description.	Casing advances with the Drill Drill rate 5'/min
		ST *see p. 18		split spoon 267'-269'	8" casing 8" Drill Bit
				See page or sheet ~~17~~ 18 of this bore hole log. split spoon at	water level NA
				... on 6/30/92. see Sheet 18	
270'				269' BMT 9-21-92	
	1 HPT 2 Lith 1 CaCO3 + H2O E.C.R. 06/30/92	ODEX Air Rotary		silty Sand (~~270~~ 269'-295')	270' at 0950 6/30/92
				5% silt 95% Sand	
				100% silt 94% C.S	
				5% M.S	
				1% F.S	
				Color Dry 2.5Y 6/2 light Brown grey	
				wet 5Y 4/4 olive	
				wellsorted, round to Subangular.	
				Mineralogy 5% Basalt granules 3% feldspar	
275'				92% Qtz Vigorous reaction to HCl	
	1 HPT 2 Lith 1 CaCO3 + H2O E.C.R. 06/30/92	ODEX Air Rotary		Silty Sand Same as the last observation.	275' at 0958 6/30/92
					Casing advances with the Drill
					Drill rate 5ft/8 minutes
					8" casing 8" Drill Bit
					water level Not avialable
280'	1 HPT 2 Lith 1 CaCO3 + H2O E.C.R. 06/30/92	ODEX Air Rotary		Silty Sand Same as the last observation see 270' description	280' at 1000 6/30/92
				no change in lithology.	" "
					Drill rate 5ft/2min
					" "
					" "
					" "

A-6000-382 (04/90)

9313090.0514

WHC-SD-EN-DP-058, Rev. 0

BOREHOLE LOG

Boring or Well No. 299-E25-45

Sheet 15 of 18

Location 200 E South of Grout

Project W017 / GTF

Elevation 675.74'

Drilling Contractor KEH/JENSEN

Driller DENNIS MINGO

Drilling Method and Equipment ODEX

Prepared By Brett Thompson (Sign/Print Name) Date 6/30/92

Reviewed By Edward C. Rafuse (Sign/Print Name) Date 06/30/92

Depth (285')	Sample Type and No.	Sample Blows or Recovery	Graphic Log	Sample Description: Soil Classification, Particle Size Distribution, Color, Moisture Content, Sorting, Angularity, Mineralogy, Reaction to HCl.	Comments: Depth of Casing, Drilling Rate, Casing Size & Type, Bit Size, Water Level
	1 HPT 2 Lith 1 CaCO3	ODEX Air Rotary		Silty Sand NO Change in lithology see 270' description	285' at 1056 6/30/92
					Casing advances with the Drill.
					Drillrate not avialable
					8" Casing 8" Drill Bit
					water level is ≈ 274'
290'	1 HPT 2 Lith 1 CaCO3	ODEX Air Rotary		Silty Sand NO Change in lithology see 270' description.	290' at 1100 6/30/92
					Drill rate 5ft/4min
295'	1 HPT 2 Lith 1 CaCO3	ODEX Air Rotary		Sandy Pebble (295 to 295.65)	295' at 1111 6/30/92
				10% medium Sand 90% crushed pebble	" "
				color Dry 2.5Y 6/2 light Brown grey	Drillrate 5ft/11min
				wet 5Y 4/2 olive grey	" "
				well sorted Sub angular to Sub-round	water level is 271.9
				Mineralogy 25% Qtz 25% feldspar	
				25% Basalt 25% undiff. volcanics	TOTAL DEPTH
				mild reaction to HCL	DRILLERS DEPTH @ 297.65
				TOTAL DEPTH END OF BORE HOLE LOG	
				EXCEPT FOR SPLIT SPOON intervals	
				see pages or sheets 15-17 OF THIS LOG.	

A-6000-382 (04/90)

9313090.0515

BOREHOLE LOG

split spoon - note scale change

Boring or Well No. 299-E25-45

Sheet ~~14~~ 15 of 18

Location 200 E South of Grout

Project WOLF ~~HEBE~~ Shaker CoTF

Elevation 675.74

Drilling Contractor KEH/JENSEN

Driller Dennis Mingo

Drilling Method and Equipment ODEX

Prepared By Brett R. Gibson/Brett Thompson (Sign/Print Name) Date 6/29/92

Reviewed By Edward C. Rafuse (Sign/Print Name) Date 06/30/92

Depth (103')	Sample Type and No.	Sample Blows or Recovery	Graphic Log	Sample Description: Soil Classification, Particle Size Distribution, Color, Moisture Content, Sorting, Angularity, Mineralogy, Reaction to HCl.	Comments: Depth of Casing, Drilling Rate, Casing Size & Type, Bit Size, Water Level
	Split Spoon	Drill Rodpush		Silty Sand (Note Scale Change	Couples or laminen
				5% silt 95% Sand	1mm to 5mm thick
				100% silt 60% M.S	
				40% F.S	B.O.C 102'
				Color Dry 2.5y 5/2 grey Brown	Drillrate NA
				Moderate to well Sorted silt to	10" CS Casing
				Sand Couples 1mm to 5mm thick Subround to	4" split spoon
				Angular Mineralogy 30% Qtz 25%	
				Basalt 45% undiff volc minerals None	
				to slight reaction to HCL	
				Sand Bed 6" Thick	sharp Contact
				70% CS 5% F.S	
				25% M.S	
				Color Dry 2.5y 5/2 greyish Brown	
				moderate to well sorted, Angular to	
				Subangular. Minerology 30% Qtz	
				25% Basalt 45% undiff. volcanics	
104'				no reaction to HCL.	
				Sandy Silt 4.5 mm thick	sharp Contact Carbonate
				10% F.S 90% silt	matrix support.
				Color dry 2.5y 6/3 light yellowish	
				Brown. well sorted, Angularity not	
				Determinable. Minerology 5% fine	
				grained qtz. 95% feldspar ~~50 undiff volc~~	
				~~minerals~~ BRT 6-29-92 Vigorous reaction	
				to HCL. Carbonate matrix support.	
				Silty Pebble Sand	sharp Contacts in bright
				10% silt 20% pebble 70% Sand	ion between grains. Cemen-
				100% silt 100% M.p 10% C.S	ted
				65% M.S	Grains of pottasium
				25% F.S	feldspar larger than the
				Color Dry 2.5y 6/3 lite yellowish Brown	quartz and angular
				moderate to well sorted Angular grains	indicating a seperate
				Subround to well round Cobbles Minerology	near by source terrian.
				25% Qtz 20% feldspar 20% Basalt	
				35% undiff volcanics NO reaction to	
				HCL	

A-6000-382 (04/90)

9313090.0516

WHC-SD-EN-DP-058, Rev. 0

BOREHOLE LOG

split spoon-note scale change

Boring or Well No. 299-E25-45

Sheet ~~15~~ 17 of 18

Location 200 E South of Grout

Project W017 / ~~LLBG~~ 9/23/92 GTF

Elevation 675.74

Drilling Contractor KEH / JENSEN

Driller Dennis Mingo

Drilling Method and Equipment ODEX

Prepared By ~~Brett Thompson~~ Brett Thompson (Sign/Print Name) Date 6/29/92

Reviewed By Edward C. Rafuse (Sign/Print Name) Date 06/30/92

Depth (172')	Sample Type and No.	Sample Blows or Recovery	Graphic Log	Sample Description: Soil Classification, Particle Size Distribution, Color, Moisture Content, Sorting, Angularity, Mineralogy, Reaction to HCl.	Comments: Depth of Casing, Drilling Rate, Casing Size & Type, Bit Size, Water Level
	Split Spoon	Drill Rod push		Silty pebble Sand (Note scale change	172'-174' at 0732 6/24/92
				5% silt 35% Pebble 60% Sand	BOC 171.84
				100% silt 95% f.p 60% C.S	Drill rate N/A
				5% M.p 35% M.S	10" ~~8~~ 6" CS Casing
				5% F.S	4" split spoon
				Color wet 5y 5/2 olive grey	(172'-174')
				Dry 2.5y N5/ grey	0732-0734
				poor Sorted Angular to well round	
				mineralogy 25% Qtz 25% Basalt	
				~~50~~ 50% Undiff. volcanics. ~~light~~ light	
				reaction to HCL E.C.R. 06/30/92	
				poor Sorting to moderate sorting	
				gradational Change from	
				~~Course g~~ fine grained to	
				course grained.	
				E.C.R. 06/30/92	
					Gradational Contact.
				Silty Sandy Pebble	
173'				2% Silt 33% Sand 65% Pebble	
				100% Silt 80% C.S 40% M.P.	
				15% M.S. 60% F.P.	
				5% F.S.	
				Color wet 5y 5/2 olive grey	
				Dry 2.5y N5/ grey	
				Poor Sorted angular to well round	
				mineralogy 25% Qtz 25% Basalt	
				50% undiff volcanics light reaction	
				to HCL	
				pebbles are volcanic in	
				origion.	
				Increased porosity and open	
				frame work twards the	
				last 6" of the split spoon.	

A-6000-382 (04/90)

9313090.0517

BOREHOLE LOG

split spoon Note scale change

Boring or Well No. 299-E25-45

Sheet 18 of 18

Location 200 E South of Grout

Project W017 / GTF

Elevation 675.74'

Drilling Contractor KEH / JENSEN

Driller Dennis Mingo

Drilling Method and Equipment ODEX

Prepared By Brett Thompson (Sign/Print Name) Date 6/30/92

Reviewed By Edward C. Rafuse (Sign/Print Name) Date 06/30/92

Depth (267')	Sample Type and No.	Sample Blows or Recovery	Graphic Log	Sample Description: Soil Classification, Particle Size Distribution, Color, Moisture Content, Sorting, Angularity, Mineralogy, Reaction to HCl.	Comments: Depth of Casing, Drilling Rate, Casing Size & Type, Bit Size, Water Level
	Split Spoon	Drill Rodpush		fine Sand 100% fine Sand. color 2.5Y 6/2 lite browngrey Dry. wet 5Y 6/2 liteolive grey well sorted angular to sub round. Mineralogy See next colum.	mineralogy => 94% Qtz 3% feldspar 2% magnitite 1% Garnets. Vigorouse reaction to HCL
				ripple marks	
				Silt - Same as below see description below.	split spoon at 1456-1430 267' to 269'.
				Course sand and fine sand rippled troughs. Magnitite at The Bottom of The ripples	8" CS casing 13.0.C 267' spoon Driven by Drill rod push.
				Sand see Sand description below. Note Sand is porous. limonite in the ripple troughs.	
				Silt or paleo soil silt 80% 20% very fine sand Color 2.5Y 4/4 wet olive Brown Dry 2.5Y 6/2 yellowish Brown well sorted well rounded	All contacts are sharp.
268'				Mineralogy of the V.F.S. 97% Qtz 1% Magnitite 2% mica. limonite staining redish yellow every .01 inches within the silt. Vigorouse reaction to HCL	
				Note: Magnitite in the bottom of The ripples. Ripples are .05" Thick.	Limonite lisagang Banding.
				Sand and silts are all Cemented. all react to HCL.	
				Silt Sand Couples or laminea. 2mm thick	
				Sand light reaction to HCL 90% C.S 10% M.S color 5Y 5/3 wet olive, Dry 5Y 6/2 lite brn grey well sorted Subangular to Angular. Mineralogy 87% Qtz 2% feldspar 1% mica 7% Basalt 3% undiff. volcanics.	Cemented in Carbonate limonite staining.

A-40

9313090.0518

Westinghouse Hanford Company	WHC-SD-EN-DP-058, Rev. 0 LOG HEADER VALIDATED KDR 11/30/92 SIGNATURE/DATE	Page 1 of 2

Well No. 299-E25-45 Area 200 East Date 7/1/92

Log Run #1 Log Type Gross Gamma

Elevation Datum top of brass cap Elevation 675.74

Survey Coordinates 135,659.15 N 576,185.55 E

Log Measured From Ground Surface

Location Description South of Grout Facility

Ground Surface Elevation 675.74

Surface Temperature NA Weather Clear-Warm

BOREHOLE INFORMATION

Driller John Johnson (Jensen Drilling)

Drill Rig Type ODEX Bit Type/Diameter Air Hammer/8"

Borehole Diameter(s)/Depth 12"/11.61' 10"/172.74 8"/298.0'

Depth Driller 298.0' Depth Logger 297.6'

Liquid Level 271.9' Liquid ~~Density~~ Appearance Clean

Temperature NA

CASING RECORD

Type	Interval
Type 12" Carbon Steel Sch. 40	Interval +0.1' - 11.61'
Type 10" Carbon Steel Sch. 40	Interval +0.3' - 172.74'
Type 8" Carbon Steel Sch. 40	Interval +0.9' - 297.65'
Type	Interval

Well Screen Interval NA

Comments: Return Error = +0.2' high
Centralizer used.

A-6000-520 (05/90)

LOG HEADER	Page 2 of 2

EQUIPMENT DATA

Logging Company PNL

Operator(s) Alan Pearson

Equipment Brand MLS Equipment Type Analog

Serial No. CG27A97

Tool Type Gamma RAY Calibration Reference PNL- UC-

Base Calibration Date 5/92

Calibration/Probe Factor 9.03x10^-2 eU P/m/c/s Base Calibration Datum (eU): Position 1 315.1 eU Position 2 65.1 eU

Dead Time 12.3 μsec Warm Up Time >15 min

LOGGING INFORMATION

Log Interval From 297.6' To 4.2'

Rerun(s) 297.6' to 260.0'

Pre Survey Verification: Position 1 314.9 eU Position 2 65.6 eU Background 57 c/s

Base Calibration Difference: Position 1 0.2 eU Position 2 0.5 eU

Logging Speed 5 ft./min. Rerun Scales, CPS/in. 50 c/s/in

Start Time 0645 Completion Time 0930

Chart Speed(s), ft/in. 10 ft./in.

Chart Recorder Horizontal Scale, CPS/in. 50 c/s/in. Time Constant(s) TC-1

Post Survey Verification: Position 1 312.8 eU Position 2 66.3 eU Background 55 c/s

Percent Change: Position 1 0.7% Position 2 1.1%

Comments Return Error = +0.2' high
Centralizer used.

Witnessed and Verified by: (sign and print name) Alan Pearson Alan Pearson Date: 7/1/92

A-6000-520 (05/90)

APPENDIX B

SEDIMENT SAMPLE DATA

9313090.0520

CONTENTS

Well 299-E25-44 Sediment Sample Data B-1
Well 299-E25-45 Sediment Sample Data B-5

9313090.0521

BJ 11-30-92 60 Sheets P.1 of 3

ENVIRONMENTAL RESTORATION HEALTH AND SAFETY

VALIDATED 3F KDR 11/30/92 SIGNATURE/DATE

Requested by:			Phone No.	Well No. 299-E25-44		Date:

Sample No. (Depth)	Sample Date	Sample Description	Analysis Date	Lab No.	Results Beta/Gamma (pci/g)	Results Alpha (pci/g)
5'	5-27-92	SOIL	5-27-92	1124-92-47	19	1
10'	5-27-92		5-27-92	1125-92-48	9	<D
15	5-27-92		5-28-92	1146-92-18	11	<D
20'	5-27-92		5-28-92	1147-92-19	8	<D
25'	5-27-92		5-28-92	1148-92-20	11	<D
30'	5-27-92		5-28-92	1149-92-21	12	<D
35'	5-27-92		5-28-92	1150-92-22	13	<D
40'	5-27-92		5-28-92	1151-92-23	12	1
45'	5-27-92		5-28-92	1152-92-24	12	<D
50'	5-27-92		5-28-92	1153-92-25	9	<D
55'	5-27-92		5-28-92	1154-92-26	11	<D
60'	5-27-92		5-28-92	1155-92-27	13	<D
65'	5-27-92		5-28-92	1156-92-28	13	<D
~~7~~ 70'	5-27-92		5-28-92	1157-92-29	8	1
75'	5-27-92		5-28-92	1158-92-30	7	<D
80'	5-27-92		5-28-92	1159-92-31	8	<D
85'	5-27-92		5-28-92	1160-92-32	12	<D
90'	5-27-92		5-28-92	1161-92-33	13	1
95'	5-27-92		5-28-92	1162-92-34	15	1
100'	5-27-92		5-28-92	1163-92-35	13	1
105'	5-27-92		5-28-92	1164-92-36	16	<D
110'	5-27-92		5-28-92	1165-92-37	16	<D
115'	5-27-92		5-28-92	1166-92-38	15	1

Performed By: C. Albosio Date: 6-18-92

Supervisor Review: Date:

Page: 1 of 3

A-6000-829 (10/91)

9313090.0522

ENVIRONMENTAL RESTORATION HEALTH AND SAFETY

Requested by:			Phone No.	Well No. 299-E25-44		Date:
Sample No. (Depth)	**Sample Date**	**Sample Description**	**Analysis Date**	**Lab No.**	**Results Beta/Gamma (pci/g)**	**Results Alpha (pci/g)**
120'	5-28-92	SOIL	5-28-92	1167-92-39	14	<D
125'	5-28-92		5-28-92	1168-92-40	14	1
130'	5-28-92		5-28-92	1169-92-41	14	<D
140'	5-28-92		5-28-92	1170-92-42	15	1
135'	6-1-92		6-16-92	1184-92-13	15	<D
145'	6-1-92		6-16-92	1185-92-14	14	<D
150'	6-1-92		6-16-92	1186-92-15	13	<D
155'	6-1-92		6-16-92	1187-92-16	12	<D
160'	6-1-92		6-16-92	1188-92-17	15	1
165'	6-1-92		6-17-92	1189-92-18	15	<D
170'	6-1-92		6-17-92	1190-92-19	15	<D
175'	6-1-92		6-17-92	1191-92-20	14	<D
180'	6-1-92		6-17-92	1192-92-21	10	<D
185'	6-1-92		6-17-92	1193-92-22	12	<D
190'	6-1-92		6-17-92	1194-92-23	9	<D
195'	6-1-92		6-18-92	1211-92-40 ~~1211-92~~ 6-154	12	1
200'	6-1-92		6-18-92	1212-92-41	13	<D
205'	6-1-92		6-18-92	1213-92-42	12	<D
210'	6-1-92		6-18-92	1214-92-43	11	<D
215'	6-1-92		6-18-92	1215-92-44	12	<D
220'	6-1-92		6-18-92	1216-92-45	12	<D
225'	6-1-92		6-18-92	1217-92-46	10	<D
230'	6-1-92		6-18-92	1218-92-47	15	1

Performed By: Ch Albesio Date: 6-18-92

Supervisor Review: _____ Date: _____

Page: 2 of 3

A-6000-829 (10/91)

9313090.0523

ENVIRONMENTAL RESTORATION HEALTH AND SAFETY

Requested by:			Phone No.	Well No. 299-E25-44		Date:
Sample No. (Depth)	**Sample Date**	**Sample Description**	**Analysis Date**	**Lab No.**	**Results Beta/Gamma (pci/g)**	**Results Alpha (pci/g)**
235'	6-1-92	SOIL	6-18-92	1219-92-48	12	<1
240'	6-1-92		6-18-92	1220-92-49	11	<1
245'	6-1-92		6-18-92	1221-92-50	14	1
250'	6-1-92		6-18-92	1222-92-6	11	1
255'	6-1-92		6-17-92	1203-92-32	10	<1
260'	6-1-92		6-17-92	1204-92-33	11	<1
263.2'-265.2'	6-1-92		6-17-92	1205-92-34	14	<1
270'	6-1-92		6-17-92	1206-92-35	24	<1
275'	6-1-92		6-17-92	1207-92-36	15	<1
280'	6-1-92		6-17-92	1208-92-37	15	1
285'	6-1-92		6-18-92	1209-92-38	13	1
290'	6-1-92		6-18-92	1210-92-39	11	<1

Performed By: C. Albers Date: 6-18-92

Supervisor Review: _____ Date: _____

Page: 3 of 3

A-6000-829 (10/91)

9313090.0524

JC McGUFFEY

SO-10/3-4590

7/17/92

299-E25-44 TEST RESULTS SUMMARY SHEET

Sample No.	Well No.	Operable Unit	Depth	CC (%)	Mois (%)	Por (%)	Den/D (g/cc)	SpG/F	SpG/C	SpG/Avg	Sat K (cm/s)	Notes
2-2524	299-E25-44	RCRA	155	1.1	3.59	NR	NR	NR	NR	NR	NR	
2-2525	299-E25-44	RCRA	160	2.0	8.16	NR	NR	NR	NR	NR	NR	
2-2526	299-E25-44	RCRA	165	2.3	10.76	NR	NR	NR	NR	NR	NR	
2-2527	299-E25-44	RCRA	170	1.1	1.83	NR	NR	NR	NR	NR	NR	
2-2528	299-E25-44	RCRA	175	0.7	1.21	NR	NR	NR	NR	NR	NR	
2-2529	299-E25-44	RCRA	180	0.7	1.24	NR	NR	NR	NR	NR	NR	
2-2530	299-E25-44	RCRA	185	0.7	0.89	NR	NR	NR	NR	NR	NR	
2-2531	299-E25-44	RCRA	190	0.7	1.45	NR	NR	NR	NR	NR	NR	
2-2532	299-E25-44	RCRA	195	0.9	1.38	NR	NR	NR	NR	NR	NR	
2-2533	299-E25-44	RCRA	200	0.9	1.07	NR	NR	NR	NR	NR	NR	
2-2534	299-E25-44	RCRA	205	0.9	1.28	NR	NR	NR	NR	NR	NR	
2-2535	299-E25-44	RCRA	210	0.9	1.13	NR	NR	NR	NR	NR	NR	
2-2536	299-E25-44	RCRA	215	0.7	1.09	NR	NR	NR	NR	NR	NR	
2-2537	299-E25-44	RCRA	220	0.7	0.75	NR	NR	NR	NR	NR	NR	
2-2538	299-E25-44	RCRA	225	0.7	0.53	NR	NR	NR	NR	NR	NR	
2-2539	299-E25-44	RCRA	230	0.7	0.72	NR	NR	NR	NR	NR	NR	
2-2540	299-E25-44	RCRA	235	0.9	1.25	NR	NR	NR	NR	NR	NR	
2-2541	299-E25-44	RCRA	240	0.7	1.19	NR	NR	NR	NR	NR	NR	
2-2542	299-E25-44	RCRA	245	0.7	0.89	NR	NR	NR	NR	NR	NR	
2-2543	299-E25-44	RCRA	250	0.9	1.20	NR	NR	NR	NR	NR	NR	
2-2544	299-E25-44	RCRA	255	0.7	1.16	NR	NR	NR	NR	NR	NR	
2-2545	299-E25-44	RCRA	260	0.7	0.96	NR	NR	NR	NR	NR	NR	
2-2546	299-E25-44	RCRA	263.2-265.2	1.1	4.75	NR	NR	NR	NR	NR	NR	
2-2547	299-E25-44	RCRA	263	0.9	1.71	NR	NR	NR	NR	NR	NR	
2-2548	299-E25-44	RCRA	270	3.2	14.50	NR	NR	NR	NR	NR	NR	
2-2549	299-E25-44	RCRA	275	1.4	3.49	NR	NR	NR	NR	NR	NR	
2-2550	299-E25-44	RCRA	280	1.1	3.42	NR	NR	NR	NR	NR	NR	
2-2551	299-E25-44	RCRA	285	1.1	4.16	NR	NR	NR	NR	NR	NR	
2-2552	299-E25-44	RCRA	290	1.1	4.24	NR	NR	NR	NR	NR	NR	

NR = Not Requested
na = not a[illegible]able

JC McGUFFEY
SO-10/3-4590

VALIDATED 2 pages
KDR 11/30/92
SIGNATURE/DATE

8/17/92

299-E25-45 TEST RESULTS SUMMARY SHEET

Sample No.	Well No.	Operable Unit	Depth	Sat K (cm/s)	SpG/F	SpG/C	SpG/Avg	Mois (%)	Por (%)	Den/D (g/cc)	CC (%)	Notes
2-2721	299-E25-45	RCRA	5	NR	NR	NR	NR	5.80	NR	NR	3.0	
2-2722	299-E25-45	RCRA	10	NR	NR	NR	NR	2.57	NR	NR	2.3	
2-2723	299-E25-45	RCRA	15	NR	NR	NR	NR	2.54	NR	NR	2.0	
2-2724	299-E25-45	RCRA	20	NR	NR	NR	NR	1.86	NR	NR	1.4	
2-2725	299-E25-45	RCRA	25	NR	NR	NR	NR	2.42	NR	NR	1.6	
2-2726	299-E25-45	RCRA	30	NR	NR	NR	NR	3.08	NR	NR	1.8	
2-2727	299-E25-45	RCRA	35	NR	NR	NR	NR	3.39	NR	NR	1.8	
2-2728	299-E25-45	RCRA	40	NR	NR	NR	NR	3.89	NR	NR	2.3	
2-2729	299-E25-45	RCRA	45	NR	NR	NR	NR	3.39	NR	NR	1.8	
2-2730	299-E25-45	RCRA	50	NR	NR	NR	NR	3.04	NR	NR	2.3	
2-2731	299-E25-45	RCRA	55	NR	NR	NR	NR	4.47	NR	NR	2.3	
2-2732	299-E25-45	RCRA	60	NR	NR	NR	NR	4.72	NR	NR	2.5	
2-2733	299-E25-45	RCRA	65	NR	NR	NR	NR	3.52	NR	NR	2.0	
2-2734	299-E25-45	RCRA	70	NR	NR	NR	NR	4.94	NR	NR	2.5	
2-2735	299-E25-45	RCRA	75	NR	NR	NR	NR	3.55	NR	NR	1.8	
2-2736	299-E25-45	RCRA	80	NR	NR	NR	NR	3.98	NR	NR	1.6	
2-2737	299-E25-45	RCRA	85	NR	NR	NR	NR	3.75	NR	NR	1.6	
2-2738	299-E25-45	RCRA	90	NR	NR	NR	NR	7.96	NR	NR	2.0	
2-2739	299-E25-45	RCRA	95	NR	NR	NR	NR	6.14	NR	NR	2.0	
2-2740	299-E25-45	RCRA	100	NR	NR	NR	NR	6.75	NR	NR	2.3	
2-2741	299-E25-45	RCRA	105	NR	NR	NR	NR	3.37	NR	NR	1.6	
2-2742	299-E25-45	RCRA	110	NR	NR	NR	NR	3.10	NR	NR	1.6	
2-2743	299-E25-45	RCRA	115	NR	NR	NR	NR	3.40	NR	NR	1.6	
2-2744	299-E25-45	RCRA	120	NR	NR	NR	NR	5.33	NR	NR	1.6	
2-2745	299-E25-45	RCRA	125	NR	NR	NR	NR	7.97	NR	NR	2.7	
2-2746	299-E25-45	RCRA	130	NR	NR	NR	NR	2.52	NR	NR	1.8	
2-2747	299-E25-45	RCRA	135	NR	NR	NR	NR	2.79	NR	NR	1.8	
2-2748	299-E25-45	RCRA	140	NR	NR	NR	NR	2.92	NR	NR	2.0	
2-2749	299-E25-45	RCRA	145	NR	NR	NR	NR	2.82	NR	NR	2.0	
2-2750	299-E25-45	RCRA	150	NR	NR	NR	NR	1.92	NR	NR	1.6	

NR = Not Requested
na = not applicable

JC McGUFFEY

SO-10/3-4590

8/17/92

299-E25-45 TEST RESULTS SUMMARY SHEET

Sample No.	Well No.	Operable Unit	Depth	Sat K (cm/s)	SpG/F	SpG/C	SpG/Avg	Mois (%)	Por (%)	Den/D (g/cc)	CC (%)	Notes
2-2751	299-E25-45	RCRA	155	NR	NR	NR	NR	1.80	NR	NR	1.4	
2-2752	299-E25-45	RCRA	160	NR	NR	NR	NR	1.37	NR	NR	1.8	
2-2753	299-E25-45	RCRA	165	NR	NR	NR	NR	2.76	NR	NR	1.8	
2-2754	299-E25-45	RCRA	170	NR	NR	NR	NR	2.13	NR	NR	1.6	
2-2755	299-E25-45	RCRA	175	NR	NR	NR	NR	1.25	NR	NR	0.9	
2-2756	299-E25-45	RCRA	180	NR	NR	NR	NR	1.03	NR	NR	0.9	
2-2757	299-E25-45	RCRA	185	NR	NR	NR	NR	1.21	NR	NR	0.9	
2-2758	299-E25-45	RCRA	190	NR	NR	NR	NR	1.00	NR	NR	0.7	
2-2759	299-E25-45	RCRA	195	NR	NR	NR	NR	1.03	NR	NR	0.9	
2-2760	299-E25-45	RCRA	200	NR	NR	NR	NR	0.91	NR	NR	0.7	
2-2761	299-E25-45	RCRA	205	NR	NR	NR	NR	1.02	NR	NR	0.7	
2-2762	299-E25-45	RCRA	210	NR	NR	NR	NR	0.77	NR	NR	0.7	
2-2763	299-E25-45	RCRA	215	NR	NR	NR	NR	0.75	NR	NR	0.7	
2-2764	299-E25-45	RCRA	220	NR	NR	NR	NR	0.75	NR	NR	0.7	
2-2765	299-E25-45	RCRA	225	NR	NR	NR	NR	0.96	NR	NR	0.7	
2-2766	299-E25-45	RCRA	230	NR	NR	NR	NR	0.85	NR	NR	0.7	
2-2767	299-E25-45	RCRA	235	NR	NR	NR	NR	4.08	NR	NR	0.7	
2-2768	299-E25-45	RCRA	240	NR	NR	NR	NR	0.66	NR	NR	0.7	
2-2769	299-E25-45	RCRA	245	NR	NR	NR	NR	0.84	NR	NR	0.7	
2-2770	299-E25-45	RCRA	250	NR	NR	NR	NR	1.00	NR	NR	0.5	
2-2771	299-E25-45	RCRA	255	NR	NR	NR	NR	0.84	NR	NR	0.7	
2-2772	299-E25-45	RCRA	260	NR	NR	NR	NR	0.71	NR	NR	0.7	
2-2773	299-E25-45	RCRA	265	NR	NR	NR	NR	1.14	NR	NR	0.9	
2-2774	299-E25-45	RCRA	270	NR	NR	NR	NR	5.10	NR	NR	1.6	
2-2775	299-E25-45	RCRA	275	NR	NR	NR	NR	3.64	NR	NR	1.1	
2-2776	299-E25-45	RCRA	280	NR	NR	NR	NR	3.87	NR	NR	1.4	
2-2777	299-E25-45	RCRA	285	NR	NR	NR	NR	4.02	NR	NR	1.1	
2-2778	299-E25-45	RCRA	290	NR	NR	NR	NR	4.23	NR	NR	1.1	
2-2779	299-E25-45	RCRA	295	NR	NR	NR	NR	4.60	NR	NR	1.4	

NR = Not Requested

na = no[illegible]icable

VALIDATED 3pg
KDR 11/30/92
SIGNATURE/DATE

ENVIRONMENTAL RESTORATION HEALTH AND SAFETY

Requested by:			Phone No.	Well No. 299-E25-45		Date:
Sample No. (Depth)	**Sample Date**	**Sample Description**	**Analysis Date**	**Lab No.**	**Results Beta/Gamma (pci/g)**	**Results Alpha (pci/g)**
5'	6-22-92	SOIL	6-26-92	1388-92-21	23	1
10'	6-22-92		6-26-92	1389-92-22	18	<D
15'	6-22-92		6-26-92	1390-92-23	12	1
20'	6-22-92		6-26-92	1391-92-24	10	<D
25'	6-22-92		6-26-92	1392-92-25	10	1
30'	6-22-92		6-26-92	1393-92-26	12	<D
35'	6-22-92		6-26-92	1394-92-27	14	<D
40'	6-22-92		6-26-92	1395-92-28	13	1
45'	6-22-92		6-26-92	1396-92-29	14	<D
50'	6-22-92		6-26-92	1397-92-30	14	1
55'	6-22-92		6-26-92	1398-92-31	13	<D
60'	6-22-92		6-26-92	1399-92-32	11	1
65'	6-22-92		6-26-92	1400-92-33	9	<D
70'	6-22-92		6-26-92	1401-92-34	9	<D
75'	6-22-92		6-26-92	1402-92-35	11	<D
80'	6-22-92		6-26-92	1403-92-40	10	1
85'	6-22-92		6-26-92	1404-92-41	14	<D
90'	6-22-92		6-26-92	1405-92-42	23	1
95'	6-22-92		6-26-92	1406-92-43	9	1
100'	6-22-92		6-26-92	1407-92-44	9	<D
105'	6-23-92		6-26-92	1416-92-5	12	<D
110'	6-23-92		6-26-92	1417-92-6	13	<D
115'	6-23-92		6-26-92	1418-92-7	9	1

Performed By: [illegible] Date: 6-26-92

Supervisor Review: [illegible] Date: 7/8/92

Page: 1 of 3

A-6000-829 (10/91)

9313090.0528

ENVIRONMENTAL RESTORATION HEALTH AND SAFETY

Requested by:			Phone No.	Well No. 299-E25-45		Date:
Sample No. (Depth)	**Sample Date**	**Sample Description**	**Analysis Date**	**Lab No.**	**Results Beta/Gamma (pci/g)**	**Results Alpha (pci/g)**
120'	6-23-92	SOIL	6-26-92	1419-92-8	17	<D
125'	6-23-92		6-26-92	1420-92-9	15	<D
130'	6-23-92		6-26-92	1421-92-10	14	<D
135'	6-23-92		6-29-92	1422-92-11	14	1
140'	6-23-92		6-29-92	1423-92-12	14	1
145'	6-24-92		6-29-92	1425-92-14	19	1
150'	6-24-92		6-29-92	1426-92-15	16	<D
155'	6-24-92		6-29-92	1427-92-16	12	1
160'	6-24-92		6-29-92	1428-92-17	21	1
165'	6-24-92		6-29-92	1429-92-18	17	1
170'	6-24-92		6-29-92	1430-92-19	21	1
175'	6-29-92		6-29-92	1436-92-34	13	1
180'	6-29-92		6-29-92	1439-92-35	11	<D
185'	6-29-92		6-29-92	1440-92-40	12	<D
190'	6-29-92		6-29-92	1441-92-41	11	<D
195'	6-29-92		6-30-92	1442-92-42	10	<D
200'	6-29-92		6-30-92	1443-92-43	11	1
205'	6-29-92		6-30-92	1444-92-44	13	<D
210'	6-29-92		6-30-92	1445-92-45	9	1
215'	6-29-92		6-30-92	1446-92-46	12	<D
220'	6-29-92		6-30-92	1447-92-47	10	<D
225'	6-29-92		6-30-92	1448-92-48	13	<D
230'	6-29-92		6-30-92	1449-92-6	11	1

Performed By: [signature] Date: 6-30-92

Supervisor Review: [signature] Date: 7/8/92

Page: 2 of 3

A-6000-829 (10/91)

9313090.0529

ENVIRONMENTAL RESTORATION HEALTH AND SAFETY

Requested by:			Phone No.	Well No. 299-E25-45		Date: N/A
Sample No. (Depth)	**Sample Date**	**Sample Description**	**Analysis Date**	**Lab No.**	**Results Beta/Gamma (pci/g)**	**Results Alpha (pci/g)**
235'	6-29-92	DOIL	6-30-92	1450-92-7	10	2
240'	6-29-92		6-30-92	1451-92-8	13	1
245'	6-29-92		6-30-92	1452-92-9	9	1
250'	6-29-92		6-30-92	1453-92-10	11	<D
255'	6-29-92		6-30-92	1454-92-11	10	<D
260'	6-29-92		6-30-92	1455-92-12	15	<D
265'	6-29-92		6-30-92	1456-92-13	14	1
270'	6-30-92		7-1-92	1471-92-27	17	<D
275'	6-30-92		7-1-92	1472-92-28	17	<D
280'	6-30-92		7-1-92	1473-92-29	20	1
285'	6-30-92		7-1-92	1474-92-30	16	<D
290'	6-30-92		7-1-92	1475-92-31	20	1
295'	6-30-92	TD	7-1-92	1476-92-32	14	<D

Performed By: [signature] Date: 7-1-92

Supervisor Review: [signature] Date: 7/8/92

Page: 3 of 3

A-6000-829 (10/91)

9313090.0530

JC McGUFFEY
SO-10/3-4590

VALIDATED
KDR 12/2/92
SIGNATURE/DATE

7/17/92

299-E25-44 TEST RESULTS SUMMARY SHEET

Sample No.	Well No.	Operable Unit	Depth	CC (%)	Mois (%)	Por (%)	Den/D (g/cc)	SpG/F	SpG/C	SpG/Avg	Sat K (cm/s)	Notes
2-2494	299-E25-44	RCRA	5	1.8	9.07	NR	NR	NR	NR	NR	NR	
2-2495	299-E25-44	RCRA	10	0.7	3.11	NR	NR	NR	NR	NR	NR	
2-2496	299-E25-44	RCRA	15	0.9	2.45	NR	NR	NR	NR	NR	NR	
2-2497	299-E25-44	RCRA	20	1.1	2.61	NR	NR	NR	NR	NR	NR	
2-2498	299-E25-44	RCRA	25	1.6	3.81	NR	NR	NR	NR	NR	NR	
2-2499	299-E25-44	RCRA	30	1.4	2.83	NR	NR	NR	NR	NR	NR	
2-2500	299-E25-44	RCRA	35	1.8	3.64	NR	NR	NR	NR	NR	NR	
2-2501	299-E25-44	RCRA	40	1.8	3.86	NR	NR	NR	NR	NR	NR	
2-2502	299-E25-44	RCRA	45	1.1	3.34	NR	NR	NR	NR	NR	NR	
2-2503	299-E25-44	RCRA	50	1.4	3.44	NR	NR	NR	NR	NR	NR	
2-2504	299-E25-44	RCRA	55	2.0	6.32	NR	NR	NR	NR	NR	NR	
2-2505	299-E25-44	RCRA	60	1.4	3.06	NR	NR	NR	NR	NR	NR	
2-2506	299-E25-44	RCRA	65	0.9	2.28	NR	NR	NR	NR	NR	NR	
2-2507	299-E25-44	RCRA	70	1.6	5.90	NR	NR	NR	NR	NR	NR	
2-2508	299-E25-44	RCRA	75	1.4	9.06	NR	NR	NR	NR	NR	NR	
2-2509	299-E25-44	RCRA	80	1.4	5.31	NR	NR	NR	NR	NR	NR	
2-2510	299-E25-44	RCRA	85	1.6	3.44	NR	NR	NR	NR	NR	NR	
2-2511	299-E25-44	RCRA	90	1.8	8.46	NR	NR	NR	NR	NR	NR	
2-2512	299-E25-44	RCRA	95	1.1	4.38	NR	NR	NR	NR	NR	NR	
2-2513	299-E25-44	RCRA	100	1.1	4.44	NR	NR	NR	NR	NR	NR	
2-2514	299-E25-44	RCRA	105	1.1	3.53	NR	NR	NR	NR	NR	NR	
2-2515	299-E25-44	RCRA	110	1.6	8.55	NR	NR	NR	NR	NR	NR	
2-2516	299-E25-44	RCRA	115	1.8	19.15	NR	NR	NR	NR	NR	NR	
2-2517	299-E25-44	RCRA	120	2.3	11.72	NR	NR	NR	NR	NR	NR	
2-2518	299-E25-44	RCRA	125	2.5	12.87	NR	NR	NR	NR	NR	NR	
2-2519	299-E25-44	RCRA	130	2.3	9.57	NR	NR	NR	NR	NR	NR	
2-2520	299-E25-44	RCRA	135	1.4	4.23	NR	NR	NR	NR	NR	NR	
2-2521	299-E25-44	RCRA	140	1.4	4.32	NR	NR	NR	NR	NR	NR	
2-2522	299-E25-44	RCRA	145	1.4	3.09	NR	NR	NR	NR	NR	NR	
2-2523	299-E25-44	RCRA	150	1.4	3.76	NR	NR	NR	NR	NR	NR	

NR = Not Requested
na = not applicable

APPENDIX C

WELL DEVELOPMENT AND PUMP INSTALLATION DATA

9313090.0532

CONTENTS

Well 299-E25-44 Well Development and Pump Installation Data C-1
Well 299-E25-45 Well Development and Pump Installation Data C-13

9313090.0533

VALIDATED 10/7/92
KDR 11/30/92
SIGNATURE/DATE

EQUIPMENT CONFIGURATION AND WELL HEAD DIAGRAM

WELL DESIGNATION 299-E25-44 DEPTH 288.00' Btoc 6"

Equipment Configuration

Item	Description
#1	1.5 hp. Grundfos submersible
#2	In-Situ datalogger 2K192
#3	In-Situ Inc s/n 262362 (cal. 2-21-93)
#4	@286.00' Btoc 6"
#5	288.00'-267.91' Btoc 6"
#6	Solinst s/n: ET-5 (cal. 1-13-93)
#7	
#8	
#9	
#10	

Diagram

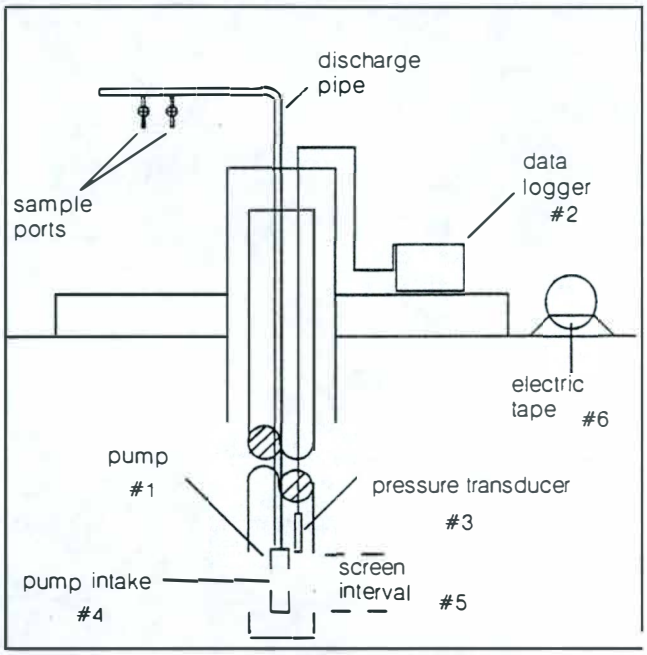

Well Head

Comments

N/A

Diagram

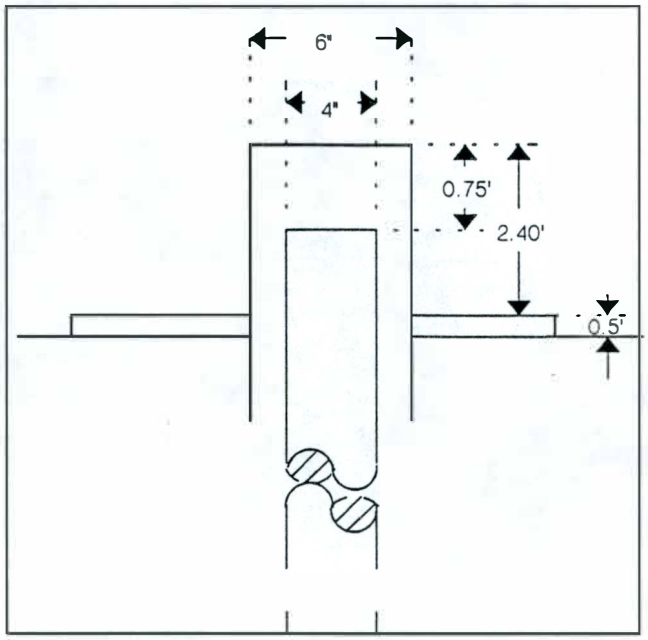

Signature of Recorder James A Coates James A. Coates Date 9-03-92

A-6000-417 (08/89)

9313090.0534

WELL DEVELOPMENT FORM

Well Designation: 299-E25-44 Well Depth: 288.00' BTOC

Screened Interval: 288.00'-267.91' BTOC Date Well Devel. Performed: 9-02-92

BAILING

Water Level Prior to Bailing: _____ Time of Measurement: _____

Volume of Bailer: _____ Number of Bails Removed: _____ Gallons: _____

Summary Discription of Water Removed: _____

Water Level After Bailing: _____ Time of Measurement: _____

SURGE BLOCK:

N.A.

Type of Surge Block: _____ Dimensions of Surge Block: _____

TD Before	Stroke Length	Stroke Frequency	Surge Interval	Surge Time	TD After	TD Difference

AIIRLIFT:

N.A.

Depyh to Eductor Pipe: _____ Airlift Start Time: _____

Flow Rate: _____ Accumulated Flow: _____ Airlift Stop Time: _____

Turbidity (NTU): _____

MECHANICAL PUMPING:

Pumping Technique: Constant Discharge Pump Depth: 286.00'BTOC Pump Start Time: 0915

Flow Rate: 11.8gpm Accumulated Flow: 885gals Pump Stop Time: 1030

Turbidity (NTU): 22, 5.4, 3.2, _____

COMMENTS: N.A.

Recorded by: James A. Coates James A. Coates Date: 9-03-92

Sign and Print Name

A-6000-393 (03/90)

9313090.0535

DRAWDOWN/RECOVERY

Well Designation: 299-E25-44 Date: 9-02-92

Well Depth: 288.00' BTOC Screened Interval: 288.00'-267.91'BTOC

Pumping Method: Constant Discharge

Equipment Used to Measure Water Level: E.Tape/Transducer S.N. ET-5/262362 Calibration Due: 1-13-93 /2-21-93

Equipment Used to Measure Flow: N.A. S.N.: N.A. Calibration Due: N.A.

Measuring Point: Top of Casing (6") Pump Start Time: 0915 Pump Stop Time: 1030

Time		Water Level		Discharge
Date	Time	Reading Units:	Water Level Units:	Reading Units:
				Bucket Method: 5gal./25.5sec.
				=11.8gal/min.
	See Attached Data			
			See Attached Data	

Recorded by: James A. Coates James A. Coates Date: 9-07-92
Sign and Print Name

BD-6000-402(03/90)

9313090.0536

299-E25-44 Drawdown

SE2000
Environmental Logger
9/03 09:05

Unit# 192 Test 1

INPUT 1 Level (ft) TOC

Reference	272.400
SG	1.000
Linearity	0.000
Scale factor	9.998
Offset	0.010
Delay mSEC	50.000

Pump Started: 9/02 09:16:20

Time:min	Time:hrs	D-T-W:Ft	d(WL):Ft
0.001	0.00000	272.396	-272.396
0.008	0.00014	272.532	-272.532
0.017	0.00028	272.608	-272.608
0.025	0.00042	272.671	-272.671
0.033	0.00056	272.791	-272.791
0.042	0.00069	272.835	-272.835
0.050	0.00083	272.886	-272.886
0.058	0.00097	272.933	-272.933
0.067	0.00111	272.952	-272.952
0.075	0.00125	272.984	-272.984
0.083	0.00139	273.009	-273.009
0.100	0.00167	273.034	-273.034
0.117	0.00194	273.059	-273.059
0.133	0.00222	273.078	-273.078
0.150	0.00250	273.091	-273.091
0.167	0.00278	273.107	-273.107
0.183	0.00306	273.113	-273.113
0.200	0.00333	273.126	-273.126
0.217	0.00361	273.129	-273.129
0.233	0.00389	273.135	-273.135
0.250	0.00417	273.145	-273.145
0.267	0.00444	273.148	-273.148
0.283	0.00472	273.148	-273.148
0.300	0.00500	273.154	-273.154
0.317	0.00528	273.157	-273.157
0.333	0.00556	273.161	-273.161
0.417	0.00694	273.164	-273.164

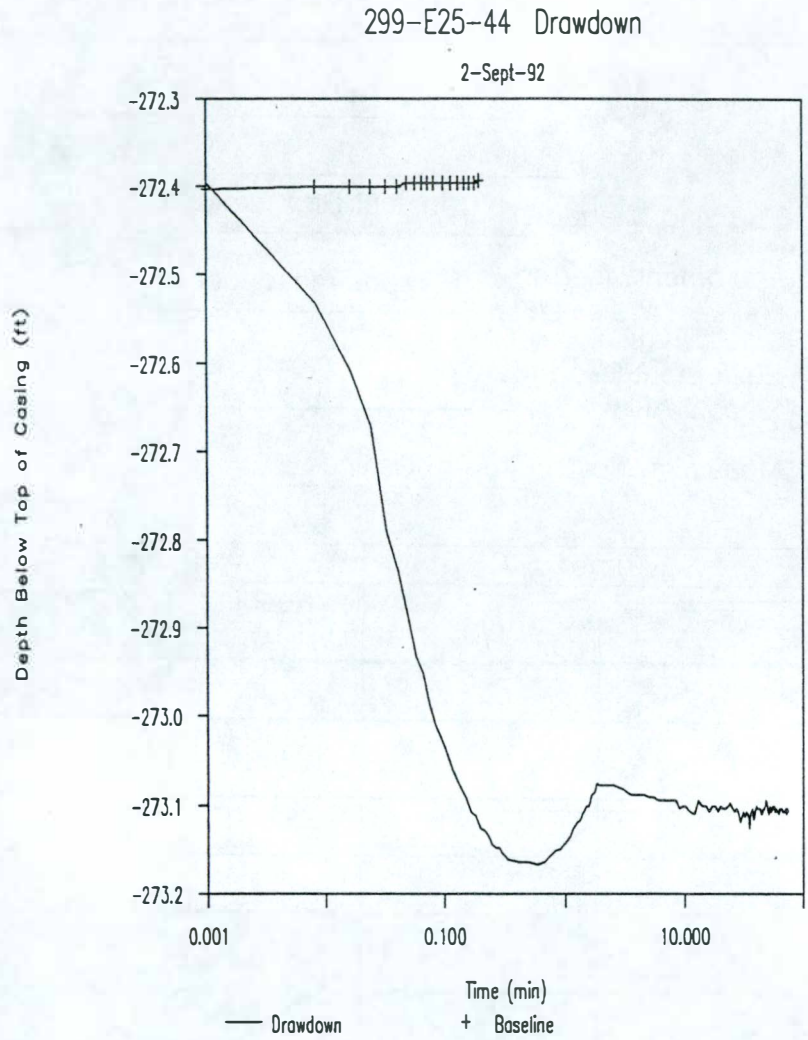

Baseline

Unit# 192	Test 0
Reference	272.400
SG	1.000
Linearity	0.000
Scale factor	9.998
Offset	0.010
Delay mSEC	50.000

Step 0 0 9/02 08:58:00

Time:min	Time:hrs	D-T-W:Ft	d(WL):Ft
0.000	0.00000	272.403	-272.403
1.000	0.01667	272.400	-272.400
2.000	0.03333	272.400	-272.400
3.000	0.05000	272.400	-272.400

9313090.0537

299-E25-44 Drawdown

0.500	0.00833	273.164	-273.164
0.583	0.00972	273.167	-273.167
0.667	0.01111	273.164	-273.164
0.750	0.01250	273.157	-273.157
0.833	0.01389	273.151	-273.151
0.917	0.01528	273.148	-273.148
1.000	0.01667	273.142	-273.142
1.083	0.01805	273.135	-273.135
1.167	0.01944	273.126	-273.126
1.250	0.02083	273.119	-273.119
1.333	0.02222	273.116	-273.116
1.417	0.02361	273.107	-273.107
1.500	0.02500	273.101	-273.101
1.583	0.02639	273.101	-273.101
1.667	0.02778	273.088	-273.088
1.750	0.02917	273.085	-273.085
1.833	0.03056	273.075	-273.075
1.917	0.03194	273.078	-273.078
2.000	0.03333	273.078	-273.078
2.500	0.04167	273.078	-273.078
3.000	0.05000	273.082	-273.082
3.500	0.05833	273.088	-273.088
4.000	0.06667	273.088	-273.088
4.500	0.07500	273.088	-273.088
5.000	0.08333	273.091	-273.091
5.500	0.09167	273.091	-273.091
6.000	0.10000	273.094	-273.094
6.500	0.10833	273.094	-273.094
7.000	0.11667	273.094	-273.094
7.500	0.12500	273.094	-273.094
8.000	0.13333	273.094	-273.094
8.500	0.14167	273.094	-273.094
9.000	0.15000	273.104	-273.104
9.500	0.15833	273.101	-273.101
10.000	0.16667	273.101	-273.101
11.000	0.18333	273.107	-273.107
12.000	0.20000	273.110	-273.110
13.000	0.21667	273.094	-273.094
14.000	0.23333	273.101	-273.101
15.000	0.25000	273.101	-273.101
16.000	0.26667	273.107	-273.107
17.000	0.28333	273.101	-273.101
18.000	0.30000	273.101	-273.101
19.000	0.31667	273.107	-273.107
20.000	0.33333	273.101	-273.101
21.000	0.35000	273.104	-273.104
22.000	0.36667	273.104	-273.104

4.000	0.06667	272.400	-272.400
5.000	0.08333	272.400	-272.400
6.000	0.10000	272.396	-272.396
7.000	0.11667	272.396	-272.396
8.000	0.13333	272.396	-272.396
9.000	0.15000	272.396	-272.396
10.000	0.16667	272.396	-272.396
11.000	0.18333	272.396	-272.396
12.000	0.20000	272.396	-272.396
13.000	0.21667	272.396	-272.396
14.000	0.23333	272.396	-272.396
15.000	0.25000	272.396	-272.396
16.000	0.26667	272.396	-272.396
17.000	0.28333	272.393	-272.393

9313090.0538

299-E25-44 Drawdown

p. 6 of 10

23.000	0.38333	273.101	-273.101
24.000	0.40000	273.097	-273.097
25.000	0.41667	273.104	-273.104
26.000	0.43333	273.107	-273.107
27.000	0.45000	273.104	-273.104
28.000	0.46667	273.107	-273.107
29.000	0.48333	273.119	-273.119
30.000	0.50000	273.113	-273.113
31.000	0.51667	273.107	-273.107
32.000	0.53333	273.113	-273.113
33.000	0.55000	273.107	-273.107
34.000	0.56667	273.110	-273.110
35.000	0.58333	273.126	-273.126
36.000	0.60000	273.107	-273.107
37.000	0.61667	273.104	-273.104
38.000	0.63333	273.116	-273.116
39.000	0.65000	273.107	-273.107
40.000	0.66667	273.101	-273.101
41.000	0.68333	273.104	-273.104
42.000	0.70000	273.104	-273.104
43.000	0.71667	273.104	-273.104
44.000	0.73333	273.110	-273.110
45.000	0.75000	273.107	-273.107
46.000	0.76667	273.104	-273.104
47.000	0.78333	273.104	-273.104
48.000	0.80000	273.094	-273.094
49.000	0.81667	273.097	-273.097
50.000	0.83333	273.104	-273.104
51.000	0.85000	273.110	-273.110
52.000	0.86667	273.101	-273.101
53.000	0.88333	273.107	-273.107
54.000	0.90000	273.107	-273.107
55.000	0.91667	273.101	-273.101
56.000	0.93333	273.104	-273.104
57.000	0.95000	273.101	-273.101
58.000	0.96667	273.107	-273.107
59.000	0.98333	273.104	-273.104
60.000	1.00000	273.107	-273.107
61.000	1.01667	273.107	-273.107
62.000	1.03333	273.110	-273.110
63.000	1.05000	273.104	-273.104
64.000	1.06667	273.104	-273.104
65.000	1.08333	273.104	-273.104
66.000	1.10000	273.104	-273.104
67.000	1.11667	273.107	-273.107
68.000	1.13333	273.107	-273.107
69.000	1.15000	273.107	-273.107

9313090.0539

299-E25-44 Drawdown

p. 7 of 10

70.000	1.16667	273.107	-273.107
71.000	1.18333	273.104	-273.104
72.000	1.20000	273.110	-273.110
73.000	1.21667	273.104	-273.104
74.000	1.23333	273.107	-273.107

9313090.0940

299-E25-44

p. 8 of 10

Unit# 192 Test #2
Recovery

Reference	272.400
SG	1.000
Linearity	0.000
Scale factor	9.998
Offset	0.010
Delay mSEC	50.000

Pump Shut off: 9/02 10:31:12

Time:min	Time:hrs	D-T-W:Ft	d(WL):Ft
0.001	0.00000	272.728	-272.728
0.008	0.00014	272.927	-272.927
0.017	0.00028	272.737	-272.737
0.025	0.00042	272.627	-272.627
0.033	0.00056	272.561	-272.561
0.042	0.00069	272.494	-272.494
0.050	0.00083	272.450	-272.450
0.058	0.00097	272.409	-272.409
0.067	0.00111	272.384	-272.384
0.075	0.00125	272.355	-272.355
0.083	0.00139	272.330	-272.330
0.100	0.00167	272.289	-272.289
0.117	0.00194	272.261	-272.261
0.133	0.00222	272.238	-272.238
0.150	0.00250	272.223	-272.223
0.167	0.00278	272.210	-272.210
0.183	0.00306	272.197	-272.197
0.200	0.00333	272.188	-272.188
0.217	0.00361	272.175	-272.175
0.233	0.00389	272.166	-272.166
0.250	0.00417	272.153	-272.153
0.267	0.00444	272.147	-272.147
0.283	0.00472	272.137	-272.137
0.300	0.00500	272.137	-272.137
0.317	0.00528	272.134	-272.134
0.333	0.00556	272.125	-272.125
0.417	0.00694	272.131	-272.131
0.500	0.00833	272.134	-272.134
0.583	0.00972	272.134	-272.134
0.667	0.01111	272.131	-272.131
0.750	0.01250	272.128	-272.128
0.833	0.01389	272.125	-272.125
0.917	0.01528	272.118	-272.118
1.000	0.01667	272.122	-272.122

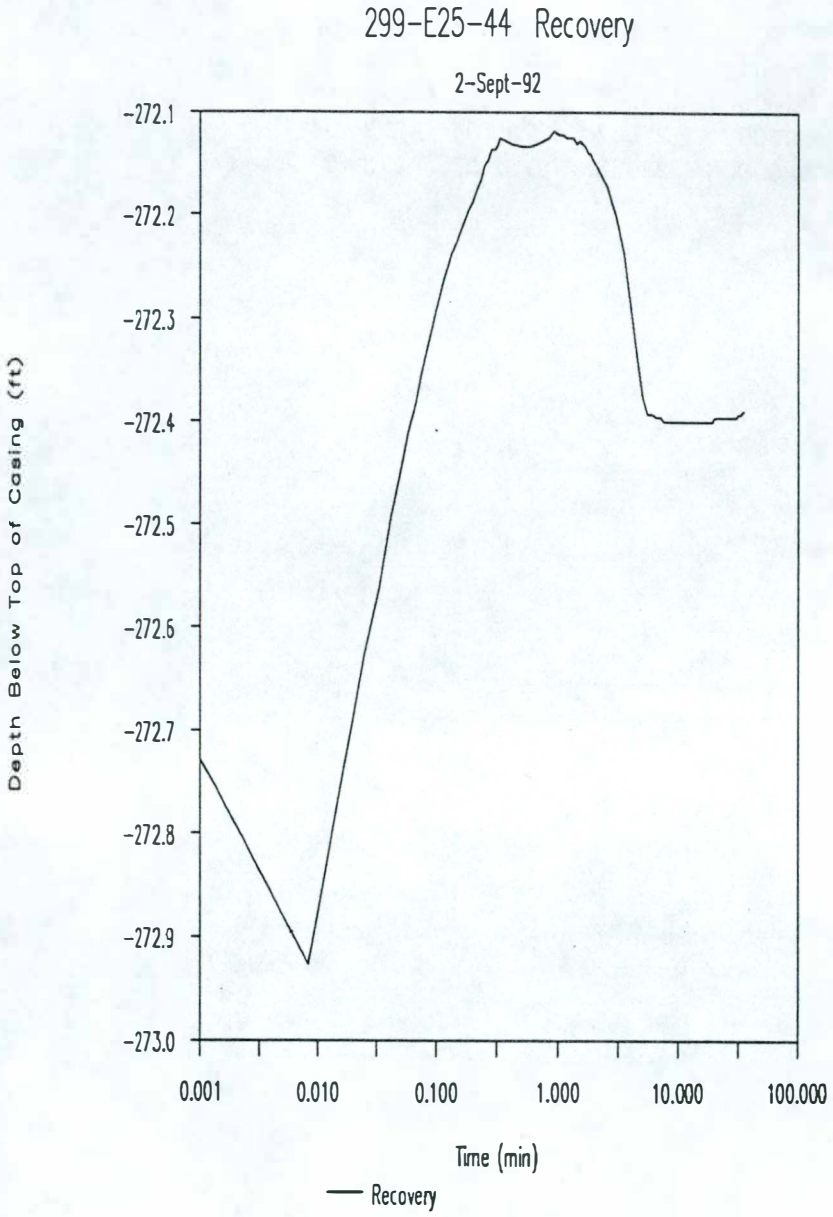

9313090.0541

299-E25-44

p. 9 of 10

1.083	0.01805	272.122	-272.122
1.167	0.01944	272.125	-272.125
1.250	0.02083	272.125	-272.125
1.333	0.02222	272.125	-272.125
1.417	0.02361	272.131	-272.131
1.500	0.02500	272.128	-272.128
1.583	0.02639	272.131	-272.131
1.667	0.02778	272.134	-272.134
1.750	0.02917	272.141	-272.141
1.833	0.03056	272.141	-272.141
1.917	0.03194	272.147	-272.147
2.000	0.03333	272.150	-272.150
2.500	0.04167	272.172	-272.172
3.000	0.05000	272.204	-272.204
3.500	0.05833	272.238	-272.238
4.000	0.06667	272.292	-272.292
4.500	0.07500	272.340	-272.340
5.000	0.08333	272.377	-272.377
5.500	0.09167	272.393	-272.393
6.000	0.10000	272.393	-272.393
6.500	0.10833	272.396	-272.396
7.000	0.11667	272.396	-272.396
7.500	0.12500	272.400	-272.400
8.000	0.13333	272.400	-272.400
8.500	0.14167	272.400	-272.400
9.000	0.15000	272.400	-272.400
9.500	0.15833	272.400	-272.400
10.000	0.16667	272.400	-272.400
11.000	0.18333	272.400	-272.400
12.000	0.20000	272.400	-272.400
13.000	0.21667	272.400	-272.400
14.000	0.23333	272.400	-272.400
15.000	0.25000	272.400	-272.400
16.000	0.26667	272.400	-272.400
17.000	0.28333	272.400	-272.400
18.000	0.30000	272.400	-272.400
19.000	0.31667	272.400	-272.400
20.000	0.33333	272.396	-272.396
21.000	0.35000	272.396	-272.396
22.000	0.36667	272.396	-272.396
23.000	0.38333	272.396	-272.396
24.000	0.40000	272.396	-272.396
25.000	0.41667	272.396	-272.396
26.000	0.43333	272.396	-272.396
27.000	0.45000	272.396	-272.396
28.000	0.46667	272.396	-272.396
29.000	0.48333	272.396	-272.396

9313090.0542

299-E25-44

P. 10 of 10

30.000	0.50000	272.396	-272.396
31.000	0.51667	272.393	-272.393
32.000	0.53333	272.393	-272.393
33.000	0.55000	272.393	-272.393
34.000	0.56667	272.390	-272.390
35.000	0.58333	272.390	-272.390

9313090.0543

WHC-SD-EN-DP-058, Rev. 0

FOR INFORMATION ONLY!

SAMPLING PUMP INSTALLATION FORM

Project: WOM

Well Number: 299-E25-44

Pump Type: Hydrostar

Pump Model: 8001

Date Installed: 9-2-92

Installed By: S. MacKinnon IDC

Depth to Water: 272.40 Ft BTOC*

Depth to Bottom: 288.0 Ft BTOC

Reported Depth of water: —

Screened Interval: 288.0 - 267.91 Ft BTOC

Pump/Riser Pipe Description:

Pipe: 3/4" Stainless steel

Pump Length: 4.3

Pump Screen Length: 1.95

Material Cleaning: MANUFACTURER

Distance pump off bottom: 8.7'

Comments:

PUMP INSTALLATION SKETCH

Total Material Length: ~~286.3~~ 286.3' Ft

Depth to Pump intake: 282.0 Ft BTOC

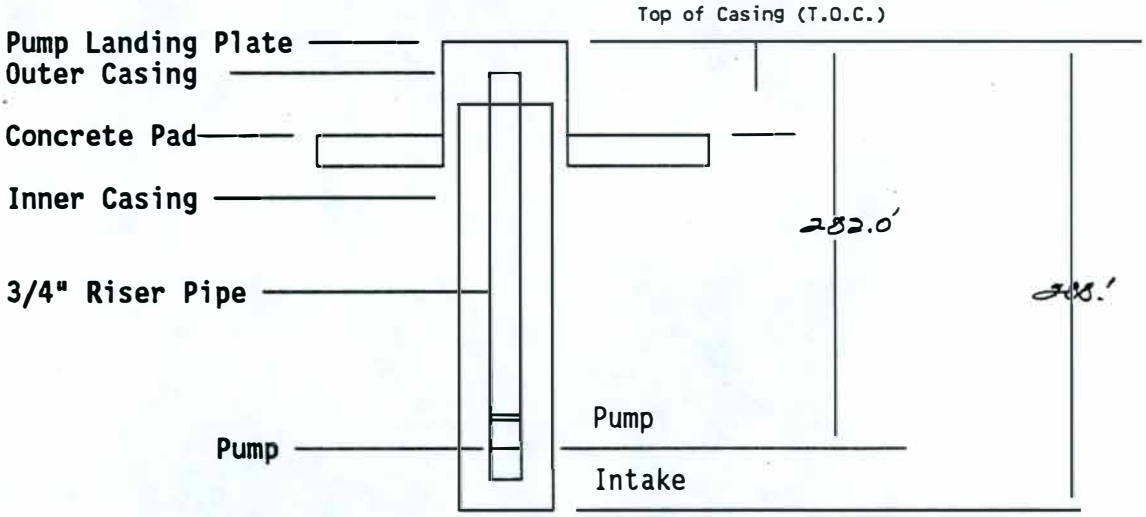

Completed By: J.A. Coates

Date: 9/2/92

Reviewed By: NA

Date: NA / /

* BTOC - Below Top Of Casing

9313090.0544

To: Well File 299-E25-44.
From: RCRA Validation coordination.
November 20, 1992 CRT

Aquifer Test was not preformed because Jensen's equipment was found faulty. The equipment is tagged "not fit for use", sometimes referred to as red tagging. Ed Rafuse and James Coates agreed not to perform a slug test because of this situation. For more information see FAR # 14, page 3.

9313090.0545

VALIDATED
KDR 11/30/92
SIGNATURE/DATE

EQUIPMENT CONFIGURATION AND WELL HEAD DIAGRAM

WELL DESIGNATION 299-E25-45 DEPTH 292.90' Btoc 6"

Equipment Configuration

Item	Description
#1	1.5 hp. Grundfos submersible
#2	In-Situ datalogger 2K192
#3	In-Situ Inc s/n 262362 (cal. 2-21-93)
#4	@290.80' Btoc 6"
#5	292.90'-272.95' Btoc 6"
#6	Solinst s/n: ET-5 (cal. 1-13-93)
#7	
#8	
#9	
#10	

Diagram

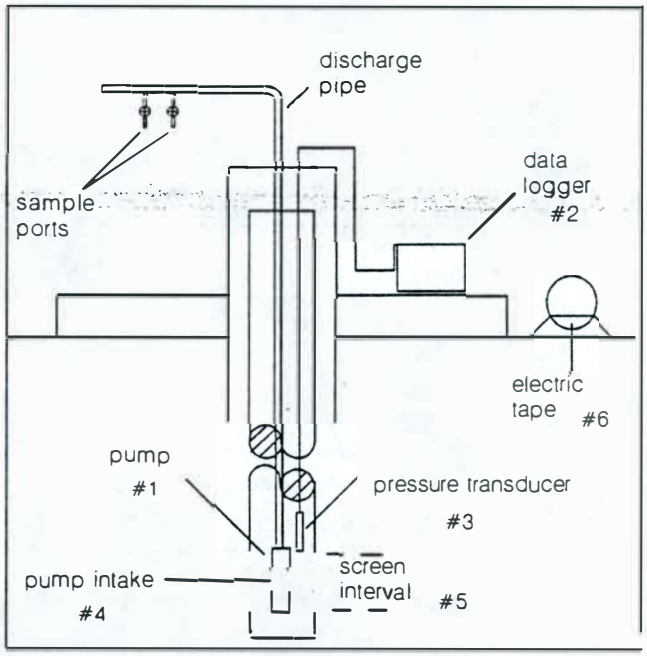

Well Head

Comments

N/A

Diagram

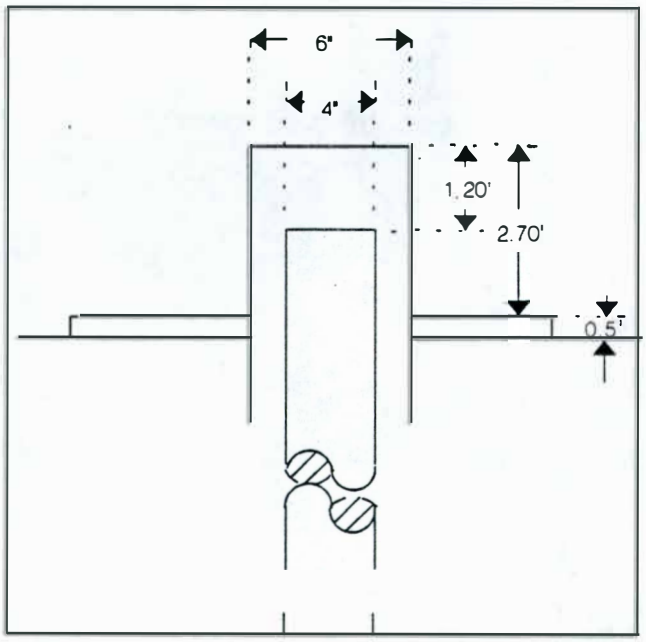

Signature of Recorder James A. Coates James A. Coates Date 8-28-92

A-6000-417 (08/89)

9313090.0546

WELL DEVELOPMENT FORM

Well Designation: 299-E25-45 Well Depth: 292.90' BTOC

Screened Interval: 292.90-272.92' BTOC Date Well Devel. Performed: 8-28-92

BAILING

Water Level Prior to Bailing: _____ Time of Measurement: _____

Volume of Bailer: _____ Number of Bails Removed: _____ Gallons: _____

Summary Discription of Water Removed: _____

Water Level After Bailing: _____ Time of Measurement: _____

SURGE BLOCK:

N.A.

Type of Surge Block: _____ Dimensions of Surge Block: _____

TD Before	Stroke Length	Stroke Frequency	Surge Interval	Surge Time	TD After	TD Difference

AIIRLIFT:

N.A.

Depyh to Eductor Pipe: _____ Airlift Start Time: _____

Flow Rate: _____ Accumulated Flow: _____ Airlift Stop Time: _____

Turbidity (NTU): _____

MECHANICAL PUMPING:

Pumping Technique: Constant Discharge Pump Depth: 290.80'BTOCPump Start Time: 0915

Flow Rate: 11.2gpm Accumulated Flow: 250gals Pump Stop Time: 0937

Turbidity (NTU): 41, 10, 04.8

COMMENTS: N.A.

Recorded by: James A Coates James A. Coates Date: 8-31-92

Sign and Print Name

A-6000-393 (03/90)

9313090.0547

DRAWDOWN/RECOVERY

Well Designation: 299-E25-45 Date: 8-27-92

Well Depth: 292.90' BTOC Screened Interval: 292.90'-272.95'BTOC

Pumping Method: Constant Discharge

Equipment Used to Measure Water Level: E.Tape/Transducer S.N. ET-5/262362 Calibration Due: 1-13-93 /2-21-93

Equipment Used to Measure Flow: N.A. S.N.: N.A. Calibration Due: N.A.

Measuring Point: Top of Casing (6") Pump Start Time: 0915 Pump Stop Time: 0937

Time		Water Level		Discharge
Date	Time	Reading Units:	Water Level Units:	Reading Units:
				Bucket Method: 5gal./27.0sec.
				=11.2gal/min.
	See Attached Data			
			See Attached Data	

Recorded by: James A. Coates Date: 9-01-92

Sign and Print Name

BD-6000-402(03/90)

9313090.0548

299-E25-45

BASE LINE

DRAWDOWN/RECOVERY

SE2000
Environmental Logger
08/31 13:44

Unit# 192 Test 0

INPUT 1: Level (F) TOC

Reference	275.460
SG	1.000
Linearity	0.000
Scale factor	9.998
Offset	0.010
Delay mSEC	50.000

Step 0 08/27 08:29:16

Time:min	Time:hrs	D-T-W:Ft	d(WL):Ft
0	0.000	275.460	-275.460
1	0.017	275.463	-275.463
2	0.033	275.463	-275.463
3	0.050	275.463	-275.463
4	0.067	275.463	-275.463
5	0.083	275.463	-275.463
6	0.100	275.463	-275.463
7	0.117	275.463	-275.463
8	0.133	275.463	-275.463
9	0.150	275.463	-275.463
10	0.167	275.463	-275.463
11	0.183	275.463	-275.463
12	0.200	275.463	-275.463
13	0.217	275.463	-275.463
14	0.233	275.463	-275.463
15	0.250	275.463	-275.463
16	0.267	275.460	-275.460

9313090.0549

299-E25-45

Drawdown.

p. 5 of 9

SE2000
Environmental Logger
08/31 13:43

Unit# 192 Test 1

INPUT 1: Level (F) TOC

Reference	275.460
SG	1.000
Linearity	0.000
Scale factor	9.998
Offset	0.010
Delay mSEC	50.000

Step 0 08/27 09:16:50

Time:min	Time:hrs	D-T-W:Ft	d(WL):Ft
0.0000	0.0000	275.633	-275.633
0.0083	0.0001	275.579	-275.579
0.0166	0.0003	275.652	-275.652
0.0250	0.0004	275.706	-275.706
0.0333	0.0006	275.737	-275.737
0.0416	0.0007	275.759	-275.759
0.0500	0.0008	275.769	-275.769
0.0583	0.0010	275.794	-275.794
0.0666	0.0011	275.804	-275.804
0.0750	0.0013	275.810	-275.810
0.0833	0.0014	275.816	-275.816
0.1000	0.0017	275.832	-275.832
0.1166	0.0019	275.851	-275.851
0.1333	0.0022	275.851	-275.851
0.1500	0.0025	275.861	-275.861
0.1666	0.0028	275.873	-275.873
0.1833	0.0031	275.873	-275.873
0.2000	0.0033	275.879	-275.879
0.2166	0.0036	275.889	-275.889
0.2333	0.0039	275.886	-275.886
0.2500	0.0042	275.892	-275.892
0.2666	0.0044	275.898	-275.898
0.2833	0.0047	275.892	-275.892
0.3000	0.0050	275.902	-275.902
0.3166	0.0053	275.898	-275.898
0.3333	0.0056	275.898	-275.898
0.4166	0.0069	275.905	-275.905
0.5000	0.0083	275.902	-275.902
0.583	0.010	275.902	-275.902
0.667	0.011	275.908	-275.908

9313090.0550

9313090.0551

0.750	0.013	275.898	-275.898
0.833	0.014	275.905	-275.905
0.917	0.015	275.902	-275.902
1.000	0.017	275.895	-275.895
1.083	0.018	275.892	-275.892
1.167	0.019	275.892	-275.892
1.250	0.021	275.886	-275.886
1.333	0.022	275.883	-275.883
1.417	0.024	275.876	-275.876
1.500	0.025	275.873	-275.873
1.583	0.026	275.864	-275.864
1.667	0.028	275.864	-275.864
1.750	0.029	275.857	-275.857
1.833	0.031	275.851	-275.851
1.917	0.032	275.857	-275.857
2.000	0.033	275.861	-275.861
2.500	0.042	275.857	-275.857
3.000	0.050	275.857	-275.857
3.500	0.058	275.864	-275.864
4.000	0.067	275.867	-275.867
4.500	0.075	275.867	-275.867
5.000	0.083	275.873	-275.873
5.500	0.092	275.873	-275.873
6.000	0.100	275.873	-275.873
6.500	0.108	275.873	-275.873
7.000	0.117	275.873	-275.873
7.500	0.125	275.876	-275.876
8.000	0.133	275.870	-275.870
8.500	0.142	275.879	-275.879
9.000	0.150	275.876	-275.876
9.500	0.158	275.879	-275.879
10.000	0.167	275.879	-275.879
11.000	0.183	275.883	-275.883
12.000	0.200	275.883	-275.883
13.000	0.217	275.886	-275.886
14.000	0.233	275.883	-275.883
15.000	0.250	275.889	-275.889
16.000	0.267	275.892	-275.892
17.000	0.283	275.886	-275.886
18.000	0.300	275.889	-275.889
19.000	0.317	275.889	-275.889

299-E25-45

RECOVERY

p. 7 of 9

SE2000
Environmental Logger
08/31 13:41

Unit# 192 Test 2

INPUT 1: Level (F) TOC

Reference	275.460
SG	1.000
Linearity	0.000
Scale factor	9.998
Offset	0.010
Delay mSEC	50.000

Step 0 08/27 09:37:08

Time:min	Time:hrs	D-T-W:Ft	d(WL):Ft
0.000	0.000	275.649	-275.649
0.008	0.000	275.602	-275.602
0.017	0.000	275.567	-275.567
0.025	0.000	275.538	-275.538
0.033	0.001	275.516	-275.516
0.042	0.001	275.497	-275.497
0.050	0.001	275.482	-275.482
0.058	0.001	275.466	-275.466
0.067	0.001	275.453	-275.453
0.075	0.001	275.441	-275.441
0.083	0.001	275.428	-275.428
0.100	0.002	275.409	-275.409
0.117	0.002	275.393	-275.393
0.133	0.002	275.381	-275.381
0.150	0.003	275.371	-275.371
0.167	0.003	275.365	-275.365
0.183	0.003	275.358	-275.358
0.200	0.003	275.349	-275.349
0.217	0.004	275.340	-275.340
0.233	0.004	275.340	-275.340
0.250	0.004	275.333	-275.333
0.267	0.004	275.327	-275.327
0.283	0.005	275.327	-275.327
0.300	0.005	275.321	-275.321
0.317	0.005	275.321	-275.321
0.333	0.006	275.314	-275.314
0.417	0.007	275.308	-275.308
0.500	0.008	275.305	-275.305
0.583	0.010	275.295	-275.295
0.667	0.011	275.298	-275.298

9313090.0552

p. 8 of 9

0.750	0.013	275.295	-275.295
0.833	0.014	275.298	-275.298
0.917	0.015	275.298	-275.298
1.000	0.017	275.298	-275.298
1.083	0.018	275.305	-275.305
1.167	0.019	275.305	-275.305
1.250	0.021	275.311	-275.311
1.333	0.022	275.314	-275.314
1.417	0.024	275.317	-275.317
1.500	0.025	275.324	-275.324
1.583	0.026	275.330	-275.330
1.667	0.028	275.333	-275.333
1.750	0.029	275.336	-275.336
1.833	0.031	275.340	-275.340
1.917	0.032	275.340	-275.340
2.000	0.033	275.343	-275.343
2.500	0.042	275.358	-275.358
3.000	0.050	275.377	-275.377
3.500	0.058	275.393	-275.393
4.000	0.067	275.418	-275.418
4.500	0.075	275.441	-275.441
5.000	0.083	275.456	-275.456
5.500	0.092	275.466	-275.466
6.000	0.100	275.466	-275.466
6.500	0.108	275.466	-275.466
7.000	0.117	275.469	-275.469
7.500	0.125	275.466	-275.466
8.000	0.133	275.466	-275.466
8.500	0.142	275.469	-275.469
9.000	0.150	275.466	-275.466
9.500	0.158	275.466	-275.466
10.000	0.167	275.466	-275.466
11.000	0.183	275.469	-275.469
12.000	0.200	275.472	-275.472
13.000	0.217	275.472	-275.472
14.000	0.233	275.472	-275.472
15.000	0.250	275.472	-275.472
16.000	0.267	275.472	-275.472
17.000	0.283	275.472	-275.472
18.000	0.300	275.472	-275.472
19.000	0.317	275.472	-275.472
20.000	0.333	275.472	-275.472
21.000	0.350	275.472	-275.472
22.000	0.367	275.472	-275.472
23.000	0.383	275.472	-275.472
24.000	0.400	275.472	-275.472
25.000	0.417	275.469	-275.469
26.000	0.433	275.469	-275.469
27.000	0.450	275.469	-275.469
28.000	0.467	275.469	-275.469

9313090.0553

p. 9 of 9

29.000	0.483	275.469	-275.469
30.000	0.500	275.469	-275.469
31.000	0.517	275.469	-275.469
32.000	0.533	275.469	-275.469
33.000	0.550	275.469	-275.469
34.000	0.567	275.469	-275.469
35.000	0.583	275.469	-275.469
36.000	0.600	275.469	-275.469
37.000	0.617	275.469	-275.469
38.000	0.633	275.466	-275.466
39.000	0.650	275.466	-275.466
40.000	0.667	275.466	-275.466
41.000	0.683	275.466	-275.466
42.000	0.700	275.466	-275.466

9313090.0554

SAMPLING PUMP INSTALLATION FORM

Project: W017 Well Number: 299-E25-45

Pump Type: Hydrostar Pump Model: 8001

Date Installed: 8-27-92 Installed By: [illegible] Knudson

Depth to Water: 275.46 Ft BTOC* Depth to Bottom: 292.90 Ft BTOC

Reported Depth of water: NA

Screened Interval: 292.90-276.95 Ft BTOC

Pump/Riser Pipe Description:

Pipe: 3/4" Stainless steel

Pump Length: 4.3

Pump Screen Length: 1.9

Material Cleaning: MANUFACTURES

Distance pump off bottom: 2.6'

Comments:

PUMP INSTALLATION SKETCH

Total Material Length: 290.3 Ft Depth to Pump intake: 288.4 Ft BTOC

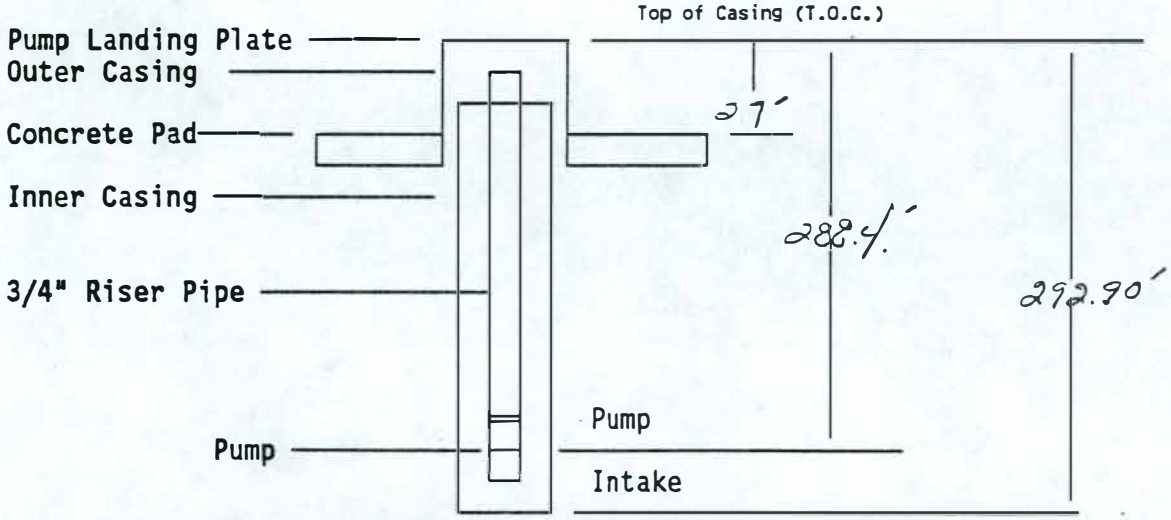

Completed By: J.A. Coates Date: 8/28/92

Reviewed By: NA Date: / /

* BTOC - Below Top Of Casing

9313090.0555

APPENDIX D

SLUG TEST DATA

9313090.0556

CONTENTS

Borehole Test Information Sheet D-1
Instantaneous Slug Test Data Sheet and Data D-2

9313090.0557

VALIDATED
KDR 11/30/92
SIGNATURE/DATE

BOREHOLE TEST INFORMATION

Borehole 299-E25-45 Borehole Diameter 4 in. Hanford Coordinates N/A

Interval Tested 292.90'-272.95' Depth Interval 292.90'-272.95' Test Type: Instantaneous Slug

Borehole Depth: 292.90' BTOC Instruction Used: WHC-CM-7-7 (EII 10.1)

EQUIPMENT

NAME	DESCRIPTION
Electric Sounder	Solinst s/n: ET-5 Calibration due: 1-13-93
Data Logger	In-Situ Inc. s/n: 2K192
Pressure Transducer	In-Situ Inc. s/n: 262362 Calibration due: 2-21-93
Slugging Rod	Site Fabricated 72.0"Lx2.0"D 0.13 cu. ft.
Steel Measuring Tape	500' Graduated Steel Tape

MEASUREMENT DATUM

Control Datum: Top of Casing (TOC) 6"

Elevation: N/A

Electric Sounder: TOC 6"

Steel Tape: TOC 6"

Pressure Transducer: TOC 6"

WELL HEAD DIAGRAM

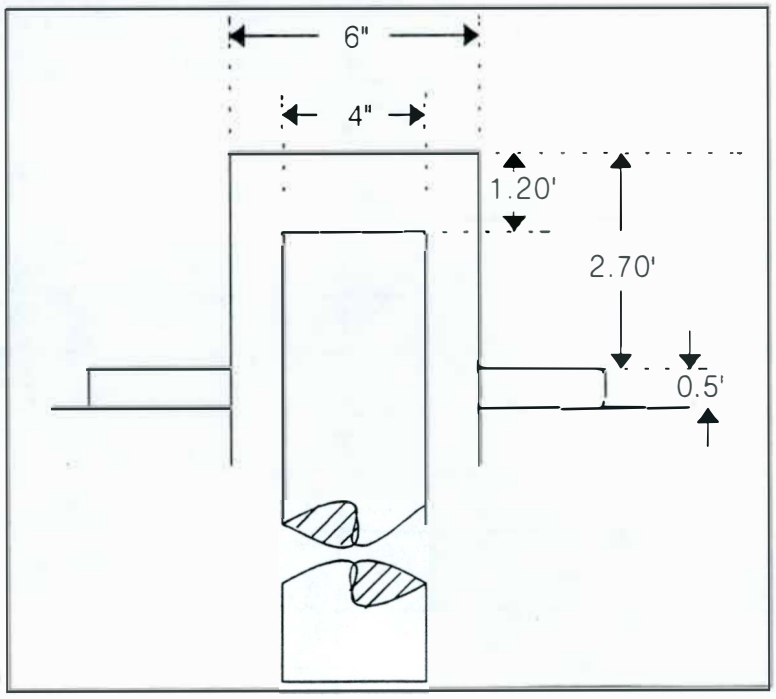

COMMENTS

N.A.

Recorded by: James A. Coates James A. Coates Date: 8-27-92

Sign and Print Name

A-6000-417 (08/89)

9313090.0558

INSTANTANEOUS SLUG TEST DATA SHEET: INJECTION

Borehole: 299-E25-45

Interval Tested: 292.90'-272.92' Btoc 6"

Depth To Water: 275.46' Btoc 6"

Depth to Transducer: 17.265' BWL

Measured by: James A. Coates

Slug Volume: 0.13 cu. ft.

Barometric Reading:

Beginning: N/A End: N/A

Time:	Start	End
Baseline	1145	1200
Withdrawal	1200	1215

Date: 8-27-92

Initial Pressure (Pi): 275.46'

Slug Level/Pressure (Pmax) 275.270'

Borehole Diameter: 4"

Time		Pressure	Time		Pressure	Time		Pressure
Observed	Elapsed	Trans.Measurement	Observed	Elapsed	Trans.Measurement	Observed	Elapsed	Trans.Measurement
		See Attached Data						
					See Attached Data			

Recorded by: James A. Coates James A. Coates Date: 9-01-92

Sign and Print Name

BD-6000-293(07/90)

9313090.0559

299-E25-45
INJECTION BASELINE

p. 3 of 9

SE2000
Environmental Logger
08/31 13:39

Unit# 192 Test 3

INPUT 1: Level (F) TOC

Reference	275.460
SG	1.000
Linearity	0.000
Scale factor	9.998
Offset	0.010
Delay mSEC	50.000

Step 0 08/27 11:46:37

Time:min	Time:hrs	D-T-W:Ft	d(WL):Ft
0	0.000	275.460	-275.460
1	0.017	275.460	-275.460
2	0.033	275.463	-275.463
3	0.050	275.466	-275.466
4	0.067	275.466	-275.466
5	0.083	275.469	-275.469
6	0.100	275.469	-275.469
7	0.117	275.469	-275.469
8	0.133	275.472	-275.472
9	0.150	275.472	-275.472
10	0.167	275.472	-275.472
11	0.183	275.475	-275.475

9313090.0560

SE2000
Environmental Logger
08/31 13:39

Unit# 192 Test 3

INPUT 1: Level (F) TOC

Reference	275.460
SG	1.000
Linearity	0.000
Scale factor	9.998
Offset	0.010
Delay mSEC	50.000

Step 0 08/27 11:46:37

p. 4 of 9

SE2000
Environmental Logger
08/31 13:35

Unit# 192 Test 4

INPUT 1: Level (F) TOC

Reference	275.460
SG	1.000
Linearity	0.000
Scale factor	9.998
Offset	0.010
Delay mSEC	50.000

Step 0 08/27 11:59:10

Time:min	Time:hrs	D-T-W:Ft	d(WL):Ft
0.0000	0.0000	275.456	-275.456
0.0083	0.0001	275.270	-275.270
0.0166	0.0003	274.402	-274.402
0.0250	0.0004	275.674	-275.674
0.0333	0.0006	275.276	-275.276
0.0416	0.0007	275.254	-275.254
0.0500	0.0008	275.418	-275.418
0.0583	0.0010	275.267	-275.267
0.0666	0.0011	275.589	-275.589
0.0750	0.0013	275.444	-275.444
0.0833	0.0014	275.447	-275.447
0.1000	0.0017	275.393	-275.393
0.1166	0.0019	275.387	-275.387
0.1333	0.0022	275.415	-275.415
0.1500	0.0025	275.412	-275.412
0.1666	0.0028	275.415	-275.415
0.1833	0.0031	275.418	-275.418
0.2000	0.0033	275.422	-275.422
0.2166	0.0036	275.425	-275.425
0.2333	0.0039	275.428	-275.428
0.2500	0.0042	275.431	-275.431
0.2666	0.0044	275.431	-275.431
0.2833	0.0047	275.434	-275.434
0.3000	0.0050	275.437	-275.437
0.3166	0.0053	275.437	-275.437
0.3333	0.0056	275.441	-275.441
0.4166	0.0069	275.444	-275.444
0.5000	0.0083	275.447	-275.447
0.583	0.010	275.450	-275.450
0.667	0.011	275.450	-275.450

9313090.0561

p.5 of 9

0.750	0.013	275.453	-275.453
0.833	0.014	275.453	-275.453
0.917	0.015	275.453	-275.453
1.000	0.017	275.453	-275.453
1.083	0.018	275.453	-275.453
1.167	0.019	275.453	-275.453
1.250	0.021	275.456	-275.456
1.333	0.022	275.456	-275.456
1.417	0.024	275.456	-275.456
1.500	0.025	275.456	-275.456
1.583	0.026	275.453	-275.453
1.667	0.028	275.456	-275.456
1.750	0.029	275.456	-275.456
1.833	0.031	275.456	-275.456
1.917	0.032	275.456	-275.456
2.000	0.033	275.456	-275.456
2.500	0.042	275.456	-275.456
3.000	0.050	275.456	-275.456
3.500	0.058	275.456	-275.456
4.000	0.067	275.456	-275.456
4.500	0.075	275.456	-275.456
5.000	0.083	275.456	-275.456
5.500	0.092	275.456	-275.456
6.000	0.100	275.456	-275.456
6.500	0.108	275.456	-275.456
7.000	0.117	275.456	-275.456
7.500	0.125	275.456	-275.456
8.000	0.133	275.456	-275.456
8.500	0.142	275.456	-275.456
9.000	0.150	275.456	-275.456
9.500	0.158	275.456	-275.456
10.000	0.167	275.456	-275.456
11.000	0.183	275.456	-275.456
12.000	0.200	275.453	-275.453
13.000	0.217	275.453	-275.453
14.000	0.233	275.453	-275.453
15.000	0.250	275.453	-275.453
16.000	0.267	275.453	-275.453
17.000	0.283	275.453	-275.453
18.000	0.300	275.453	-275.453

9313090.0562

INSTANTANEOUS SLUG TEST DATA SHEET: WITHDRAWAL

page 6 of 9

Borehole: 299-E25-45

Interval Tested: 292.90'-272.92' Btoc 6"

Depth To Water: 275.46' Btoc 6"

Depth to Transducer: 17.265' BWL

Measured by: James A. Coates

Slug Volume: 0.13 cu. ft.

Barometric Reading:

Beginning: N/A End: N/A

Time:	Start	End
Baseline	1215	1245
Withdrawal	1245	1300

Date: 8-27-92

Initial Pressure (Pi): 275.46'

Slug Level/Pressure (Pmax) 276.776

Borehole Diameter: 4"

Time		Pressure	Time		Pressure	Time		Pressure
Observed	Elapsed	Trans.Measurement	Observed	Elapsed	Trans.Measurement	Observed	Elapsed	Trans.Measurement
		See Attached Data						
					See Attached Data			

Recorded by: James A Coates James A. Coates Date: 9-01-92

Sign and Print Name

BD-6000-293(07/90)

9313090.0553

p. 7 of 9

SE2000
Environmental Logger
08/31 13:38

Unit# 192 Test 5

INPUT 1: Level (F) TOC

Reference	275.460
SG	1.000
Linearity	0.000
Scale factor	9.998
Offset	0.010
Delay mSEC	50.000

Step 0 08/27 12:17:50

Time:min	Time:hrs	D-T-W:Ft	d(WL):Ft
0	0.000	275.460	-275.460
1	0.017	275.460	-275.460
2	0.033	275.456	-275.456
3	0.050	275.456	-275.456
4	0.067	275.456	-275.456
5	0.083	275.456	-275.456
6	0.100	275.456	-275.456
7	0.117	275.456	-275.456
8	0.133	275.456	-275.456
9	0.150	275.456	-275.456
10	0.167	275.456	-275.456
11	0.183	275.453	-275.453
12	0.200	275.453	-275.453
13	0.217	275.453	-275.453
14	0.233	275.456	-275.456
15	0.250	275.456	-275.456
16	0.267	275.456	-275.456
17	0.283	275.456	-275.456
18	0.300	275.453	-275.453
19	0.317	275.453	-275.453
20	0.333	275.453	-275.453
21	0.350	275.456	-275.456
22	0.367	275.456	-275.456
23	0.383	275.453	-275.453
24	0.400	275.453	-275.453
25	0.417	275.453	-275.453
26	0.433	275.453	-275.453

9313090.0564

p. 8 of 9

SE2000
Environmental Logger
08/31 13:31

Unit# 192 Test 6

INPUT 1: Level (F) TOC

Reference	275.460
SG	1.000
Linearity	0.000
Scale factor	9.998
Offset	0.010
Delay mSEC	50.000

Step 0 08/27 12:46:37

Time:min	Time:hrs	D-T-W:Ft	d(WL):Ft
0.0000	0.0000	275.460	-275.460
0.0083	0.0001	276.776	-276.776
0.0166	0.0003	276.037	-276.037
0.0250	0.0004	276.183	-276.183
0.0333	0.0006	275.867	-275.867
0.0416	0.0007	275.791	-275.791
0.0500	0.0008	275.643	-275.643
0.0583	0.0010	275.633	-275.633
0.0666	0.0011	275.592	-275.592
0.0750	0.0013	275.589	-275.589
0.0833	0.0014	275.564	-275.564
0.1000	0.0017	275.529	-275.529
0.1166	0.0019	275.510	-275.510
0.1333	0.0022	275.504	-275.504
0.1500	0.0025	275.494	-275.494
0.1666	0.0028	275.488	-275.488
0.1833	0.0031	275.482	-275.482
0.2000	0.0033	275.478	-275.478
0.2166	0.0036	275.475	-275.475
0.2333	0.0039	275.472	-275.472
0.2500	0.0042	275.472	-275.472
0.2666	0.0044	275.469	-275.469
0.2833	0.0047	275.466	-275.466
0.3000	0.0050	275.466	-275.466
0.3166	0.0053	275.466	-275.466
0.3333	0.0056	275.463	-275.463
0.4166	0.0069	275.460	-275.460
0.5000	0.0083	275.456	-275.456
0.583	0.010	275.456	-275.456
0.667	0.011	275.456	-275.456

9313090.0595

p. 9 of 9

0.750	0.013	275.453	-275.453
0.833	0.014	275.453	-275.453
0.917	0.015	275.453	-275.453
1.000	0.017	275.453	-275.453
1.083	0.018	275.453	-275.453
1.167	0.019	275.453	-275.453
1.250	0.021	275.453	-275.453
1.333	0.022	275.453	-275.453
1.417	0.024	275.453	-275.453
1.500	0.025	275.453	-275.453
1.583	0.026	275.453	-275.453
1.667	0.028	275.453	-275.453
1.750	0.029	275.453	-275.453
1.833	0.031	275.453	-275.453
1.917	0.032	275.453	-275.453
2.000	0.033	275.453	-275.453
2.500	0.042	275.453	-275.453
3.000	0.050	275.450	-275.450
3.500	0.058	275.450	-275.450
4.000	0.067	275.453	-275.453
4.500	0.075	275.450	-275.450
5.000	0.083	275.453	-275.453
5.500	0.092	275.450	-275.450
6.000	0.100	275.450	-275.450
6.500	0.108	275.453	-275.453
7.000	0.117	275.453	-275.453
7.500	0.125	275.453	-275.453
8.000	0.133	275.453	-275.453
8.500	0.142	275.453	-275.453
9.000	0.150	275.453	-275.453
9.500	0.158	275.456	-275.456
10.000	0.167	275.456	-275.456
11.000	0.183	275.453	-275.453
12.000	0.200	275.453	-275.453
13.000	0.217	275.450	-275.450

9313090.0566

THIS PAGE INTENTIONALLY
LEFT BLANK

Date Received: 3/1/93 NS	INFORMATION RELEASE REQUEST	Reference: WHC-CM-3-4

Complete for all Types of Release

Purpose

- [] Speech or Presentation
  - [] Full Paper
  - [] Summary
  - [] Abstract
  - [] Visual Aid
  - (Check only one suffix)
- [] Speakers Bureau
- [] Poster Session
- [] Videotape
- [] Reference
- [X] Technical Report
- [] Thesis or Dissertation
- [] Manual
- [] Brochure/Flier
- [] Software/Database
- [] Controlled Document
- [] Other

ID Number (include revision, volume, etc.): WHC-SD-EN-DP-058, Rev. 0

List attachments: N/A

Date Release Required: 3/8/93

Title: CY 1992 BOREHOLE COMPLETION DATA PACKAGE, GROUT TREATMENT FACILITY, WELLS 299-E25-44 AND 299-E25-45

Unclassified Category: UC-

Impact Level: 3Q

New or novel (patentable) subject matter? [X] No [] Yes
If "Yes", has disclosure been submitted by WHC or other company?
[X] No [] Yes Disclosure No(s).

Information received from others in confidence, such as proprietary data, trade secrets, and/or inventions?
[X] No [] Yes (Identify)

Copyrights? [X] No [] Yes
If "Yes", has written permission been granted?
[] No [] Yes (Attach Permission)

Trademarks?
[X] No [] Yes (Identify)

Complete for Speech or Presentation

Title of Conference or Meeting: N/A

Group or Society Sponsoring: N/A

Date(s) of Conference or Meeting: N/A

City/State:

Will proceedings be published? [] Yes [] No
Will material be handed out? [] Yes [] No

Title of Journal: N/A

CHECKLIST FOR SIGNATORIES

Review Required per WHC-CM-3-4	Yes	No	Reviewer - Signature Indicates Approval: Name (printed)	Signature	Date
Classification/Unclassified Controlled Nuclear Information	[]	[X]			
Patent - General Counsel	~~[X]~~	~~[X]~~	not required per telecon @ B.D. Williams		
Legal - General Counsel	~~[X]~~	~~[X]~~	2-26-93 · CJ Lynch		
Applied Technology/Export Controlled Information or International Program	[]	[X]			
WHC Program/Project	[]	[X]			
Communications	[]	[X]			
RL Program/Project	[]	[X]			
Publication Services	[X]	[]	LA Brown	LA Brown	3/1/93
Other Program/Project	[]	[X]			

Information conforms to all applicable requirements. The above information is certified to be correct.

	Yes	No
References Available to Intended Audience	[X]	[]
Transmit to DOE-HQ/Office of Scientific and Technical Information	[]	[X]

Author/Requestor (Printed/Signature): L.C. Swanson — Date: 2/23/93

Intended Audience: [] Internal [] Sponsor [X] External

Responsible Manager (Printed/Signature): R.L. Jackson — Date: 2/23/93

INFORMATION RELEASE ADMINISTRATION APPROVAL STAMP

Stamp is required before release. Release is contingent upon resolution of mandatory comments.

APPROVED FOR RELEASE — OFFICIAL DOCUMENT — NS — 3/1/93

Date Cancelled | Date Disapproved

9313090.0567

THIS PAGE INTENTIONALLY
LEFT BLANK